G4

Parts Manual MY19

SEE INSIDE COVER

GA8700984 REV 3
xxx 2020
FROM SERIAL #202138

GOLDACRES

For further information about any of the products shown please visit: www.goldacres.com.au

© Goldacres Trading 2020
This publication and all designs are copyright.

No part, products or designs may be reproduced by any process except in accordance with the Copyright act 1968.

All information in this operator's manual is based on the latest product information available at the time of printing. The policy of Goldacres is one of continuous improvement and as such, Goldacres reserve the right to alter any specifications and designs without notice and without incurring any obligation regarding such changes.

No part of this manual may be reproduced without written permission from Goldacres. All photographs and technical information remain the property of Goldacres.

Goldacres Trading Pty Ltd
3 Morang Crescent
Mitchell Park Vic 3355

Ph: 03 5342 6399
Fax: 03 5342 6308

DOWNLOAD AN ELECTRONIC VERSION OF THESE MANUALS ON THE GOLDACRES WEBSITE:

goldacres.com.au

Under Parts & Service > Owner-Operator Manuals:

GA8700987 - Operator's Manual, Crop Cruiser G4 MY19

Under Parts & Service > Parts Manuals:

GA8700984 - Parts Manual, Crop Cruiser G4 MY19

GOLDACRES - RESELLER TERMS AND CONDITIONS OF SALE

Goldacres Goods are only available for purchase upon the terms and conditions set out below.

Interpretation

1. In terms and conditions:
(1) "Goldacres" means Goldacres Trading Pty. Ltd. A.C.N. 061 306 732 trading as Goldacres Agricultural Equipment (its successors and assigns) which is the seller of the Goods;
(2) "Purchaser" means the purchaser of the Goods;
(3) "Goods" means the products and, if any, the services sold or provided by Goldacres to the Purchaser;
(4) "GST Act" and "GST" are given the meanings referred to in a New Tax System (Goods and Services Tax) Act 1999.
(5) "PPSA" means the Personal Property Securities Act 2009 (Clth) (as amended);
(6) Nothing in these terms and conditions shall be read or applied so as to exclude, restrict or modify or have the effect of excluding, restricting or modifying, any condition, warranty, guarantee, right or remedy implied by law (including the Competition and Consumer Act 2010) and which by law cannot be excluded, restricted or modified.

General

2. (1) The Goods and all other products or services provided by Goldacres are provided subject to these terms and conditions. These terms and conditions and any terms and conditions incorporated herein by virtue of clause 3 hereto shall prevail over all other terms and conditions of the Purchaser or otherwise to the extent of any inconsistency.
(2) These terms and conditions may not be modified or amended without the expressed written consent of Goldacres endorsed by the Managing Director of Goldacres Trading P/L.

Additional Terms and Conditions

3. From time to time Goldacres may provide additional or extended warranties in respect of certain goods and/or services. Where such additional or extended warranties are provided to a Purchaser in writing they will be incorporated into these terms and conditions provided that in the event of any inconsistency between these terms and conditions and the terms of any additional or extended warranty, the provisions of the additional or extended warranty shall prevail.

Goldacres quotations.

4. Unless previously withdrawn, Goldacres quotations are open for acceptance within the period stated therein or, when no period is stated, with 14 days only of the quotation date. Goldacres reserves the right to refuse any order based on any quotation within 7 days of receipt of the order.

Packing

5. The cost of any special packing and packing materials used in relation to the Goods shall be at the Purchaser's expense notwithstanding that such cost may have been omitted from any quotation.

Shortage

6. The Purchaser waives any claim for shortage of any Goods delivered if a claim in respect thereof has not been lodged with Goldacres within (7) seven days from the date of receipt of the Goods by the Purchaser.

Specifications, etc: Catalogues, etc: Quantities

7. All specifications, (including but not limited to: drawings, particulars of weights, volumes, capacities, dimensions, load factors) are approximate only and any deviation shall not be taken to vitiate any contract with Goldacres or form any claim against Goldacres. The descriptions, illustrations, and performances contained in catalogues, price lists and other advertising matter do not form part of the contract of sale of the Goods. Where specifications, drawings or other particulars are supplied by the Purchaser, Goldacres' price is made on estimates of quantities required. Should there be any adjustments in quantities above or below the quantities estimated by Goldacres and set out in a quotation, then any such increase or decrease shall be adjusted on a unit rate basis according to unit prices set out in the quotation.

Performance, Capacities, Chemicals, Liquids, Application Methods, Environmental Effects

8. Any performance, volumes, and/or capacity figures given by Goldacres are estimates only. Goldacres shall be under no liability for damages for failure to obtain such figures unless specifically guaranteed in writing and any such written guarantee shall be subject to the recognised tolerances applicable to such figures. The suitability of chemicals and other liquids for any application and the application methods and the environmental effects shall be the sole decision and responsibility of the Purchaser and the user of the Goods. Goldacres gives no warranty as to the suitability of any chemicals or other liquids for any application, nor the application methods nor the environmental effects, which may result from the use of the Goods. Goldacres shall be under no liability for damages arising out of the use of any chemicals, liquids, or mixtures in the Goods nor for any application, nor for the application methods nor for the environmental effects, which may result from the use of the Goods.

Delivery/Service Times

9. The delivery times and service times made known to the Purchaser are estimates only and Goldacres shall not be liable for late delivery, non-delivery or delay and under no circumstances shall Goldacres be liable for any loss, damage or delay occasioned by the Purchaser or its customers arising from the late or non-delivery or late installation of the Goods.

Loss or damage in transit

10. Goldacres is not responsible for any loss or damage to Goods in transit. Goldacres shall render the Purchaser such assistance as may be necessary to press claims on carriers provided that the Purchaser shall have notified Goldacres and the carriers immediately the loss or damage is discovered on receipt of Goods and shall lodge a claim on the carrier within three days of the date of receipt of the Goods. Insurance of Goods in transit is the responsibility of the Purchaser.

Limit of Liability

11. (1) Goldacres liability for Goods manufactured by it is limited to:
(a) where the law implies consumer guarantees into these terms and conditions pursuant to Part 3.2 Division 1 of Schedule 2 to the Competition and Consumer Act 2010 (C'th") ("consumer guarantees") which cannot be excluded and Goldacres breaches a consumer guarantee, the loss and damage the Purchaser is entitled to at law which cannot be excluded by these terms and conditions;

and, in all other cases

(b) making good any defects by repairing the same or at Goldacres option by replacement within a period not exceeding either 1000 hours or twelve calendar months, whichever comes first, after the Goods have been dispatched provided that:
(i) the defects have arisen solely from faulty materials or workmanship;
(ii) the Goods have not received maltreatment inattention or interference;
(iii) accessories of any kind used by the Purchaser are manufactured or approved by Goldacres;
(iv) where applicable, the seals on the Goods remain unbroken;
(v) there has been no improper adjustment, calibration or operation;
(vi) the use of accessories including consumables, hardware or software (not manufactured by Goldacres) has been approved in writing by Goldacres;
(vii) no contamination or leakage has been caused or induced;
(viii) any modification to the Goods have been authorised in writing by Goldacres;
(ix) there has been no inadequate or incorrect use, storage, handling or application of the Goods;
(x) there has been no use or operation of the Goods outside of the physical, electrical or environmental specifications of the Goods;
(xi) there has been no inadequate or incorrect site preparations;
(xii) there has been no inadequate or improper maintenance of the Goods;
(xiii) it has not been caused by fair wear and tear; and
(xiv) firstly the Goods have been thoroughly inspected and any damage (from whatever cause) to the Goods (and in particular – the structure, welding, seams, bolts, booms) has been repaired prior to the Goods being operated, used driven or moved and on each occasion the tanks are filled; and
(xv) there has been no failure to comply with the requirements of all present or future laws or regulations relating to the Goods and/or the use and/or the operation of the Goods; and
(xvi) there has been no failure to maintain a record of hours of operation (which record shall contain full details of all inspections, repairs and maintenance) and produce same to Goldacres at the time of the claim;
(xvii) the defective Goods or any damaged part of the Goods are promptly returned free of cost to Goldacres or a representative of Goldacres;
(xviii) all warranty related repairs have been carried out with the prior authorisation of Goldacres;
(2) If Goods or any part thereof are not manufactured by Goldacres, in particular engines, engine accessories, transmissions, transfer cases, differentials, tyres, tubes, batteries, radios and UHFs, the guarantee of the manufacturer thereof shall be accepted by the Purchaser and is the only guarantee given to the Purchaser in respect of the Goods or that part provided always that this clause does not seek to exclude the consumer guarantees;
(3) In the case of hydraulic systems, Goldacres shall replace defective parts in accordance with clause 11(1) of these conditions, provided that the failure of the part was not related to contamination within the system, Goldacres shall not be liable for labour in the case of repairing hydraulic system defects;
(4) Goldacres will not accept liability for damage attributed to fair wear and tear including but not limited to fair wear and tear to nozzles, chains, belts, filters, brake pads, polyethylene bushes and liquid pump valves, valve O-rings, diaphragms and seals;
(5) Goldacres shall not be liable for and the Purchaser releases Goldacres from any claims in respect of faulty or defective design of any Goods supplied unless such a design has been wholly prepared by Goldacres and the responsibility for any claim has been specifically accepted by Goldacres in writing and in any event Goldacres liability hereunder shall be strictly limited to the replacement of defective parts in accordance with paragraph 11(1) of these conditions provided always that this clause does not seek to exclude the consumer guarantees;
(6) Except as provided herein, all express and implied warranties, guarantees and conditions under statute or general law as to the merchantability, description, quality, suitability or fitness of the Goods for any purpose or as to design, assembly, installation, materials or workmanship or otherwise are hereby expressly excluded and Goldacres shall not be liable for physical or financial injury, loss or damage or for consequential loss or damage of any kind arising out of the supply, layout, assembly, installation or operation of the Goods or arising out of Goldacres negligence or in any other way whatsoever;
(7) The benefit of any warranty provided under these terms and conditions shall only be available to the Purchaser and shall not be transferable by the Purchaser;
(8) The warranties provided under these terms and conditions do not extend to second hand or used Goods that may be sold by Goldacres.

12. Goldacres liability for breach of a consumer guarantee is hereby limited (in the case of goods and services not used for personal, domestic or household purposes) to:
(1) in the case of Goods, any one or more of the following:
(a) the replacement of the Goods or the supply of equivalent Goods;
(b) the repair of the Goods;
(c) the payment of the cost of replacing the Goods or acquiring the equivalent Goods;
(d) the payment of having the Goods repaired; or
(2) in the case of services;
(a) the supplying of the services again; or
(b) the payment of the cost of having the services supplied again.

Prices

13. (1) Unless otherwise stated in writing by Goldacres, all prices quoted by Goldacres are inclusive of GST for supplies within Australia and exclusive of GST for exports outside of Australia. Prices quoted are those ruling at the time of quotation or the date the price is given and are based on rates of freight, insurance, customs, duties, taxes, exchange, shipping expenses, sorting and stacking charges, cartage, cost of materials and other charges affecting the cost of production ruling on that date and any alterations thereto either before acceptance of or during currency of the contract shall be to the Purchaser's account.
(2) For the purpose of 38-185 of the GST Act, the day upon which the seller gives the invoice for the supply shall be the date of the invoice.

Payment

14. (1) The purchase price in relation to the Goods and the cost of the service shall be payable without deduction and or set off and payment thereof shall be made on or before the thirteenth day of the month following the delivery of the Goods or performance of the services unless other terms of payment are expressly stated in writing.
(2) A decreasing or increasing adjustment and or the issuing of an adjustment note, pursuant to Division 21 and Division 29-C of the GST Act, shall not, in any way, constitute a release, waiver, and or forgiveness of the debt incurred by the Purchaser.

Interest on overdue payments

15. If Goldacres is not paid for any Goods or services on the due date specified in this agreement without prejudice to any other right or remedy, all outstanding money shall bear interest at the rate set, pursuant to the Penalty Interest Rates Act, Victoria, 1986, as such money, together with interest shall be recoverable forthwith from the Purchaser.

Rights in relation to Goods.

16. (1) Title to the Goods supplied by Goldacres to the Purchaser shall remain with Goldacres until the total amount due in respect of the Goods and all monies owing to Goldacres have been paid in full (the "Debts"). Risk in the Goods shall pass to the Purchaser upon delivery.
(2) The Purchaser shall have the right to resell Goods but only as fiduciary agent and trustee for Goldacres by way of bona fide sale at full market value and in the ordinary course of its business.
(3) Until all the Debts have been paid in full:
(a) the Purchaser shall take custody of the Goods as trustee, fiduciary agent and bailee for Goldacres;
(b) the Purchaser shall keep the Goods separate from any other goods and properly marked, stored, protected and insured;
(c) the Purchaser must hold all of the money it receives ("Proceeds"):
(i) from the sale of any property into which Goods supplied have been incorporated; and
(ii) from the sale of Goods or provision of services including the Goods supplied by the Goldacres as bailee, fiduciary agent and trustee for Goldacres, but the Purchaser need not hold on trust any money exceeding the amount of the Debts at the time the money is received.
(d) The Purchaser expressly acknowledges that it is bound by the fiduciary obligation created in the preceding paragraph and acknowledges that:
(i) it must hold the Proceeds on trust for Goldacres;
(ii) it must place the whole of the Proceeds in an account separate from its own moneys (the "Proceeds Account");
(iii) it must maintain the Proceeds Account separate from its own moneys at all times.
(iv) it must maintain proper records for the Proceeds Account.
(v) it must not assign or encumber any book debts arising from sales made in circumstances set out in clauses 16(c)(i) and (ii) or do any other act in derogation of Goldacres' legal or beneficial interests; and
(vi) it must account to Goldacres on demand for all moneys standing to the credit of such account.
(e) For the purposes of identification of different consignments of Goods purchased from Goldacres and receipt of Proceeds, the Purchaser agrees that the principle of "Last In, First Out" shall be applied to any items that cannot be distinguished.
(f) Goldacres may trace the Proceeds in equity.
(4) Goldacres may at any time, without notice to the Purchaser and without prejudice to any other rights which it may have against the Purchaser, terminate any contract connected with the Goods and the bailment referred to in clause 16(3) and enter upon any premises owned or occupied by the Purchaser where Goldacres reasonably believes the Goods may be stored, and repossess the Goods without liability for any damaged caused, and subsequently dispose of the Goods at Goldacres' discretion if:
(a) the Debts are not paid in accordance with these terms and conditions or any other contract or arrangement between Goldacres and the Purchaser; or
(b) Goldacres receives notice of or reasonably believes that:
(i) a third person may attempt to levy execution against the Goods; or
(ii) the Purchaser is insolvent (within the meaning of the Corporations Act 2001) or bankrupt; or
(iii) the Purchaser has entered into any arrangement or composition with its creditors, gone into liquidation, or has appointed a receiver, a receiver and manager or administrator.
(5) If after repossession under clause 16(4) Goldacres sells the Goods, Goldacres shall account to the Purchaser for any proceeds of sale (less expenses of repossession and sale) that exceeds the amount of the outstanding Debts.
(6) If any Goods belonging to Goldacres are disposed of by the Purchaser or an insurance claim is made in respect of them, Goldacres shall be entitled to trace the sale or insurance proceeds, which proceeds shall be held by the Purchaser in a separate bank account on trust for Goldacres.
(7) The Purchaser agrees and acknowledges that in the event it sells Goods to a third party on account, it will include in its terms and conditions of sale a provision under which the Purchaser retains title to the Goods until such time that the total amount due in respect of the Goods and all monies owing to the Purchaser have been paid in full by that third party debtor. The Purchaser also agrees and acknowledges that in these instances, it will register its PMSI in accordance with the PPSA in respect of its security interest in the Goods.

PPSA provisions

17. (1) The Purchaser acknowledges that these terms and conditions constitute a security agreement for the purposes of section 20 of the PPSA and that a security interest exists in all Goods (and any associated Proceeds from their sale) previously supplied by Goldacres to the Purchaser (if any) and in all in future Goods (and any associated Proceeds from their sale) that may be supplied to the Purchaser by Goldacres.
(2) The Purchaser acknowledges that Goldacres has a first ranking purchase money security interest ("PMSI") (as defined in section 14 of the PPSA) in the Goods and the Purchaser must not jeopardise such ranking (whether by act or omission).
(3) The Purchaser acknowledges that it has received value as at the date of first delivery of the Goods and has not agreed to postpone the time for attachment of the security interest (as defined in the PPSA) granted to Goldacres under these terms and conditions.
(4) The Purchaser will execute documents and do such further acts as may be required by Goldacres to register the security interest granted to Goldacres under these terms and conditions under the PPSA.
(5) Until ownership of the Goods passes, the Purchaser must not give to Goldacres a written demand or allow any other person to give Goldacres a written demand requiring Goldacres to register a financing change statement under the PPSA in respect of Goldacres' interest in the Goods.
(6) The Purchaser must indemnify Goldacres and on demand reimburse Goldacres for all costs and expenses incurred by Goldacres in respect of these terms and conditions including but not limited to Goldacres registering its security interest in the Goods, lodging, discharging or amending any financing statement or financing change statement, or otherwise complying with the PPSA.
(7) The Purchaser agrees (other than as provided in these terms and conditions) not to sell, lease, mortgage, deal with, dispose of or create or attempt to create any other security interest in or affecting the Goods unless and until the Purchaser's Debts have been satisfied.
(8) The Purchaser waives its rights under the following provisions of Chapter 4 of the PPSA:
(a) to receive a notice on enforcement action against liquid assets (section 121(4),
(b) to receive a notice to seize collateral (section 123);
(c) to receive a notice of disposal of Goods by Goldacres purchasing the Goods (section 129);
(d) to receive a notice to dispose of Goods (section 130);
(e) to receive a statement of account following disposal of Goods (section 132(2));
(f) to receive a statement of account if no disposal of Goods for each 6 month period (section 132(4));
(g) to receive notice of any proposal of Goldacres to retain Goods (section 135(2));
(h) to object to any proposal of Goldacres to either retain or dispose of Goods (section 137(2));
(i) to redeem the Goods (section 142);
(j) to reinstate the security agreement (section 143);
(k) to receive a notice of any verification statement (section 157(1) and section 157(3);
(9) The rights Goldacres may have under the PPSA are supplementary and in addition to those set out in these terms and conditions and do not derogate from the rights and remedies of Goldacres under these terms and conditions or under any other statute or under general law.
(10) The Purchaser must give 10 business days prior written notice of any proposed change in the Purchaser's name or other identifying characteristics and details.

Purchasers property

18. Any property of the Purchaser under Goldacres' custody or control shall be entirely at the Purchaser's risk as regards loss or damage caused to the property or by it.

Storage

19. Goldacres reserves the right to make a reasonable charge for storage if delivery instructions are not provided by the Purchaser within (14) fourteen days of a request by Goldacres for such information.

Returned Goods

20. Goldacres shall not be under any obligation to accept Goods returned by the Purchaser and will do so only on terms to be agreed in writing in each individual case.

Goods sold

21. All Goods to be supplied by Goldacres shall be described on the purchase order agreed by Goldacres and the Purchaser and the description on such purchase order modified as so agreed shall prevail over other descriptions including any Purchaser's specification or enquiry.

Cancellation

22. No order may be cancelled except with the consent in writing and on terms, which will indemnify Goldacres against all losses.

No waiver

23. The failure of any party to enforce the provisions of these terms and conditions or to exercise any rights expressed in these terms and conditions shall not be a waiver of such provisions or rights and shall not affect the enforcement of this agreement. The exercise by any party of any of its rights expressed in this agreement shall not preclude or prejudice such party from exercising the same or any other rights it may have irrespective of any previous action taken by that party.

Force Majeure

24. If by reason of any fact, circumstance, matter or thing beyond the reasonable control of Goldacres is unable to perform in whole or in part any obligation under these terms and conditions then Goldacres shall be relieved of that obligation under these terms and conditions to the extent and for the period that it is so unable to perform and shall not be liable to the Purchaser in respect of such inability.

Passing of risk

25. Risk in the Goods shall pass to the Purchaser upon delivery of the Goods to the Purchaser or collection of the Goods by the Purchaser's agent or carrier as the case may be.

Exclusion of liability

26. To the extent permitted by law Goldacres shall not be liable to the Purchaser in contract or in tort arising out of, or in connection with, or relating to, the performance of the Goods or any breach of these conditions or any fact, matter or thing relating to the Goods or error (whether or not it is negligent or a breach of contract) in information supplied to the Purchaser or a user before or after the date of the Purchaser's or user's use of the Goods and Goldacres shall be under no liability for damages arising out of the use of any chemicals, liquids, or mixtures in the Goods, nor for any application, not for the application methods nor for the environmental effects, which may result therefrom or from the use of the Goods.

Exclusion of representations and arrangements

27. To the extent permitted by law the terms and conditions supersede and exclude all prior and other discussions, representations (contractual or otherwise) and arrangements relating to the supply of the Goods or any part thereof including, but without limiting the generality of the foregoing, those relating to the performance of the Goods or any part thereof or the results that ought to be expected from using the Goods.

Place of contract

28. The contract for sale of the Goods and the provision of the services is made in the State of Victoria and the Purchaser agrees to submit all disputes arising with Goldacres to the courts of such State and any court competent to hear appeals therefrom.

Contents

1 CHASSIS 7

Chassis 7
Access Platform Left Side & Boom Rest (Pre - 2021) . . 8
Access Platform Left Side & Boom Rest (Pre - 2021) . . 9
Access Platform Left Side & Boom Rest (Pre - 2021) . 10
Access Ladder Assembly (2021 On) 11
Access Ladder Assembly (2021 On) 12
Boom Rest - Right 13
Hand Wash Bottle 14
Tool Box 15
Bonnet 16
Battery Tray Covers 17
Battery Tray Assembly. 18
Window Washer Bottle 19
ECU Mounting 19
Drain Points 20
Pneumatic Storage Tanks 21
Pneumatic Tank 1 22
Pneumatic Tank 2 23
Fuel Tank Ladder. 24
Tow Bar 25

2 PUMPS 27

Spray Pump - Zeta 260 27
Spray Pump - Zeta 260 - Hydraulic Drive 28
Hydraulic Fill Pump. 29
Hydraulic Fill Pump. 30

3 FLUSH TANK 31

Flush Tank Mounting 31
Flush Tank Assembly. 32
Flush Tank - Check Valve Assembly 33

4 RH POD 35

Not Fitted 35

5 LH POD 37

EZ Control Station - Mounting 37
EZ Control Station - Assembly 38
EZ Control Station - Hopper Tee 39
EZ Control Station - 3" Fill Point. 40
3” Front Fill, Inlet ASsembly 41
EZ Control Station - Chemical Probe 42
EZ Control Station - Micromatic Rinse 43
EZ Control Station - Switches 44
Agitator Control - Venturi 45
Agitator Control - Venturi - no Hopper. 46
Rinse Control - Fresh Water Fill. 47
Rinse Control - Fresh Water Fill - no Hopper. 48
Hopper Tee Assembly 49
Valve - Quick Fit 2 Way Assembly. 50
Bypass Valve Assembly. 51

6 DCI 52

Not Fitted 52

7 DUAL PRODUCT 54

Not Fitted 54

8 INDUCTION HOPPER 56

Hopper Tank & Frame 56
Hopper Tank. 57
Hopper Tank. 58
Hopper Bottom - 2” Flanged 59
Hopper Frame 60
Hopper Frame 61

9 FOAM MARKER TANK 62

Not Fitted 62

10 TRANSCAL 64

Not Fitted 64

11 MAIN TANK 66

Tank Assembly - 4000L 66
Tank Assembly - 4000L 67
Tank Rinsing Nozzle, Elbow - Assembly 68
Inlet - Boom Recirculation - RapidFlow 68
Venturi Filler 69
Supermix Agitator 70
Inlet - Tank Fill 1" - Chemical Pump 71
Inlet - Tank Fill 3" - Main & Side 71
Inlet - Tank Fill 3" - Front. 72

Inlet - Hopper Tank 2" - Angled 73
Outlet - Tank Overflow 3" 73
Tank Fill - 3” Front Fill Assembly 74
Tank Fill - 3” Side Fill Assembly 75
Tank Fill - Front - 3” Valve Assembly 76
Tank Fill - Side - 3” Valve Assembly 77
Breather Valve Assembly 78
Dry Sight Tube - Float & Guide 79
Dry Sight Tube - Locating Cap Assembly 79
Dry Sight Tube - Float Assembly 80
Dry Sight Tube - Cap & Tube Assembly 81
Dry Sight Tube - Mount 82
Tank Stops, Tank & Overflow Brackets 83

12 WHEELS & MUDGUARD 84

Mud Guards - Front Axle 2WD 84
Mud Guards - Front Axle 4WD 85
Mud Guards - Rear Axle 86
Mud Guards - Pipes 87
Crop Divider - Front Axle 2WD 88
Crop Divider - Front Axle 4WD 89
Crop Divider - Nose Cone Assembly 90
Crop Divider - Nose Cone Frame Assembly 91
Crop Deflectors - Front Axle 2WD 92
Crop Deflectors - Front Axle 4WD 93
Crop Deflectors - Rear Axle. 94
Front Wheel Mounting - 2WD 95
Front Wheel Mounting - 4WD 96
Rear Wheel Mounting 97
Tyres & Rims 98

13 BOOM CENTRE 100

Paralift Arms & Paralift Rear 100
Base Assembly - 30-36m. 101
Base Assembly - 30-36m. 102
Tilt Assembly. 103
Tilt Assembly. 104
Yaw Assembly 105
Yaw Assembly 106
Flow Dividers & Check Valves 107
Centre Level 108
Cable Mount Rear 109
Oversize Sign Mount 110
Double Roll Shocker Assembly 111
Delta Link 112
Lower Limit Switch - Raven 113
Manual Grease Station 114
RapidFire Components 115
RapidFire Components 116
Spray Bar 116
Norac System 117
Norac Spare Parts List 118
Norac Spare Parts List 119

14 BOOM WING 120

Boom Pivots - 24-36m 120
Boom Fold Adjuster - 24-36m 121
Cable Drum - 24-36m 122
Cable Drum - 24-36m 123
Bi-Fold - 24-36m 124
3D Breakaway 2.0 125
3D Breakaway 2.0 126
3D Breakaway 2.0 - Mechanism 126
Boom Protector Assembly - Outer 127
Boom Protector Assembly - Inner. 127
Fence Line End Protector - Quick Fit 128
Boom Cables - 24-36m 129
Boom Cable Springs - 24-36m. 130
Upper Pivot Assembly 131
Lower Pivot Assembly 131
Steel Inner Wings 132
Aluminium Outer Wings. 132
Aluminium Break Away Tip 132
Aluminium Outer Assembly 36m 133
Touch Down Wheel 134
Touch Down Wheel 135

15 ELECTRICS 136

Lighting - Boom Tip LEDs 136
Lighting - Headlight & Indicator 137
Lighting - Bonnet LED Light Bar - Optional 137
Lighting - Cab Lights - Front 138
Lighting - Cab Lights - Rear 138
Lighting - Rear Tail Lights. 139
Lighting - Night Pro LEDs 139
Lighting - Rotating Beacon - Pole Mount. 140
Lighting - Egress Relay 140
Lighting - Work Lights 141

Batteries 142
Reverse Warning Beeper 142
Horn 143
Buss Bar & Isolator Switch 144
Cabin Fuse Box 145
Fuse Box 'A' - Cabin 146
Electrical Connectors - AMP. 147
Electrical Connectors - AMP. 148
Electrical Connectors - Deutsch 149
Electrical Connectors - Deutsch 150
Electrical Connectors - Weather Pack. 151
Electrical Connectors - Weather Pack. 152
Electrical Harnesses & Components. 153
Electrical Harnesses & Components. 154

16 SCHEMATICS 155

Plumbing - Boom Valves Optioned 155
Plumbing - RapidFire Optioned 156
Pneumatics 157
Hydraulics - Trimble AutoSteer 158
Hydraulics - Trimble AutoSteer 159
Hydraulics - Trimble AutoSteer - Adjustable Axle . 160
Hydraulics - Trimble AutoSteer - Adjustable Axle . 161
Hydraulics - John Deere Steering 162
Hydraulics - John Deere Steering 163
Hydraulic Hoses - Cab Chassis 164
Hydraulic Hoses - Cab Chassis 165
Hydraulic Hoses - Sprayer 166
Hydraulic Hoses - Sprayer 167
Hydraulic Transmission Cooler Lines 168

17 DECALS 169

Decals - Base Kit 169
Decals - Base Kit 170
Decals - Base Kit 171
Decals - Base Kit 172
Decals - Base Kit 173
Decals - Base Kit 174
Decals - Bonnet 175
Decals - Tank. 175
Decals - Dry Sight Tube 176

18 HYDRAULICS 177

Oil Tank & Frame 177
Oil Tank & Frame 178
Oil Tank Assembly 179
Oil Tank - Gauge Assembly 180
Oil Tank - Oil Return Filter 181
Oil Cooler Assembly 182
Transmission Cooler Assembly 183
Steering Orbital 184
Auto Steer - Trimble Manifold 185
Auto Steer - John Deere Manifold 186
Hydraulic Manifold - Pump Flow Control Assembly 187
Hydraulic Manifold - Pump Flow Control 188
Hydraulic Manifold - Accumulator Lockout 189
Hydraulic Manifold - Fill Pump 190
Hydraulic Manifold - Adjustable axle 191
Hydraulic Manifold - Centre Lock 192
Hydraulic Manifold - Return 193
Hydraulic Priority Valve 193
Pressure Reducing Valve Assembly 194
Flow Divider Assembly 194
Double Pilot Check Valves - Bi-fold 195
Yaw Control Valve Assembly 196
Hydraulic Yaw Charge Line 196
Hydraulic Cylinder - Boom Tilt 197
Hydraulic Cylinder - Boom Lift 198
Hydraulic Cylinder - Yaw 199
Hydraulic Cylinder - Fold 200
Hydraulic Cylinder - Centre Leveling 200
Hydraulic Cylinder - Bi-fold 201
Cylinder Rose End - Spare Parts 201
NORAC Assembly. 202
NORAC Valve Block Assembly 203
Spool Block - Parts in Common 204
Spool Block - Diff Lock 205
Spool Block - Diff Lock 206
Spool Block - Diff Lock, Tilt 207
Spool Block - Diff Lock, Tilt 208
Spool Block - Diff Lock, Bi-fold 209
Spool Block - Diff Lock, Bi-fold 210
Spool Block - Diff Lock, Bi-fold, Tilt 211
Spool Block - Diff Lock, Bi-fold, Tilt 212
Spool Block - Diff Lock, Bi-fold, NORAC Passive. . 213
Spool Block - Diff Lock, Bi-fold, NORAC Passive. . 214
Spool Block - Diff Lock, Bi-fold, NORAC Active . . 215
Spool Block - Diff Lock, Bi-fold, NORAC Active . . 216

Spool Block - Diff Lock, NORAC, Passive 217
Spool Block - Diff Lock, NORAC, Passive 218
Spool Block - Diff Lock, NORAC, Active 219
Spool Block - Diff Lock, NORAC, Active 220
Spool Block - Adj. Axle 221
Spool Block - Adj. Axle, Tilt 222
Spool Block - Adj. Axle, Bi-fold 223
Spool Block - Adj. Axle, Bi-fold 224
Spool Block - Adj. Axle, Bi-fold, Tilt 225
Spool Block - Adj. Axle, Bi-fold, Tilt 226
Spool Block - Adj. Axle, Bi-fold, NORAC Passive . . 227
Spool Block - Adj. Axle, Bi-fold, NORAC Passive . . 228
Spool Block - Adj. Axle, Bi-fold, NORAC Active . . 229
Spool Block - Adj. Axle, Bi-fold, NORAC Active . . 230
Spool Block - Adj. Axle, NORAC Passive 231
Spool Block - Adj. Axle, NORAC Active 232
Spool Block - Mounting Assembly 233

19 PLUMBING 235

Dual Pressure Filter Assembly 235
Suction Filter Assembly 236
Suction Filter - 2". 237
Elbow - Main Product Line. 237
Flow Control Valve - Raven controller 238
Flow Control Valve - Raven controller 239
Flow Meter. 240
Flow Meter Assembly 241
RapidFire - RapidFlow Return Valve 242
RapidFire - Pressure Flow Distributor - 4400 243
RapidFire - Pressure Flow Distributor - ISOBUS . . 244
Boom Valves Assembly 245
Boom Valve Unit Assembly 246
Boom Valve Unit Assembly 247
Nozzles - Teejet Single Body. 248
Nozzles - Teejet Clock Face Body 249
Nozzles - Altek Clamp 250
Nozzles - Altek Dual Spray Body 251
Nozzles - Altek Spray Stop - Push On Type 252
Nozzles - Altek Spray Stop - Push In Type. 253
Nozzles - Direct Control - Single 254
Nozzles - Direct Control - Dual 255
Nozzles - Direct Control - Dual Assembly 256
Nozzles - Fence Line - Solenoid Operated 257
Nozzles - Tip Strainers. 258
Nozzles - IDK - Cap 258
Nozzles - IDK - Tips 258
Nozzles - ID3 - Cap 259
Nozzles - ID3 - Tips 259
Nozzles - AIXR - Tips 259
Plumbing Lines - Miscellaneous 260
Plumbing Lines - Miscellaneous 261
Boom Poly - Pipe Clamps - Singles 261
Boom Poly - Pipe Clamps - Multi 262
Plumbing Lines - Nozzle Brackets 263
Plumbing Lines - Nozzle Bracket Kits 263
Nozzles - Mid Breakaway Assembly 264
Nozzles - Mid Breakaway Assembly 265
Boom Poly - 3/4”- 600mm 266
Boom Poly - 3/4”- 1100mm. 266
Boom Poly - 3/4”- 1200mm. 266
Boom Poly - 3/4”- 1600mm. 267
Boom Poly - 3/4”- 2100mm. 267
Boom Poly - 3/4”- 2600mm. 268
Boom Poly - 3/4"- 3100mm 268
Hoses 269
Hose Clamps. 270
Cable Ties 270
Spiral Guard 270
Chemical Probe Hose Lance. 271
Enviro Coupling & Hose 271

20 ENGINE & TRANSMISSION 273

Cummins Engine / Allison Transmission. 273
Allison Transmission 274
Allison Transmission 275
Air Governor. 276
Air Cleaner. 277
Exhaust Pipe Work 278
Charge Air Intake 279
Hydraulic Pump Mounting 22/22cc 280
Hydraulic Pump 22/22cc 281
Air Conditioner Compressor & Belts 282
Air Conditioner Condenser 283
Coolant System Plumbing 284
Combi Cooler 285
Combi Cooler Mounting. 286
Combi Cooler Fan 287
Engine Mounts 288

Heater Hose Fittings 289
Header Tank Assembly 290
Fuel Tank 291
Fuel Filters 292
Fuel Filter - Primary 293
Fuel Filter - Secondary 294
Exhaust 295

21 DRIVELINE & DIFFERENTIAL 297

Axle Front 2WD - Stub Axle 297
Axle Front 2WD - 2m 298
Axle Front 2WD - 2m 299
Axle Front 2WD - 3m 300
Axle Front 2WD - 3m 301
Axle Front 2WD - Adjustable 2-3m 302
Axle Front 2WD - Adjustable 2-3m 303
Axle Front 2WD - Adjustable 3-4m - Steering . . . 304
Axle Front 2WD - Adjustable 3-4m - Housings . . . 305
Axle Front 2WD - Adjustable 3-4m - Drop Legs . . 306
Axle Front 2WD - Adjustable 2-3m - Drop Legs . . 307
Axle Front 4WD - Steering Cylinder 308
Axle Front 4WD - Steering Joint 309
Axle Front 4WD - Drop Leg Mounting 310
Axle Front 4WD - Shock Mounts 311
Axle Front 4WD - Differential & Mounting 312
Axle Front 4WD - Shock Mounts 313
Axle Front 4WD - Drop Leg Casing. 314
Axle Front 4WD - Drop Leg Internals. 315
Axle Front 4WD - Hub & Shaft Assembly. 316
Axle Rear 2WD & 4WD - 2m & 3m 317
Axle Rear 2WD & 4WD - Differential Mounting . . 318
Axle Rear 2WD & 4WD - Drop Leg 319
Axle Rear 2WD & 4WD - Drop Leg 320
Axle Rear 2WD & 4WD - Hub & Shaft Assembly . 321
Axle Rear 2WD & 4WD - Planetary Hub 322
Axle Rear 2WD - Adjustable 2-3m 323
Axle Rear 2WD - Adjustable 2-3m 324
Axle Rear 2WD - Adjustable 3-4m - Differential . . 325
Axle Rear 2WD - Adjustable 3-4m - Housings . . . 326
Axle Rear 2WD - Adjustable 3-4m - Drop Legs . . 326
Axle Rear 2WD - Adjustable 3-4m - Drive Shafts. . 327
Axle Rear 2WD - Adjustable 3-4m - Diff Drain. . . 327
Axle Rear - Fixed & Adjust. 3-4m - Differential JCB. 328
Axle Rear - Fixed & Adjust. 3-4m - Differential JCB. 329
Axle Rear - Driveshaft Assembly - Dromos 330
Axle Rear - Differential Assembly - Dromos 331
Axle Rear - Differential Assembly - Dromos 332
Propeller Shafts & Mount - 2WD 333
Propeller Shafts & Mount - 4WD 334
Propeller Shafts & Mount - 4WD 335
Propeller Shaft Mounting - 2WD - Dromos 335
Transfer Case - 4WD 336
Suspension Front - Shock Absorber 337
Suspension Front - Torque Rods - Fixed Axle 338
Suspension Front - Torque Rods - Adjustable Axle . 339
Suspension Front - Torque Rods - Parts & Tool . . . 340
Suspension Front - Air Bag. 341
Suspension Rear 342
Suspension Rear 343
Suspension Rear - Sway Bar Assembly - 3m. 345
Suspension - Ride Height Valve - Front Fixed 346
Suspension - Ride Height Valve - Front 2-3m 347
Suspension - Ride Height Valves - Rear 348

22 CAB 349

Cab - Assembled. 349
Fuse Box Mounting. 350
Fuse Box Lid 351
Pneumatic Manifold Mounting 352
Pneumatic Manifold Assembly 2WD 353
Pneumatic Manifold Assembly 4WD 354
Brake Pedal Assembly 355
Brake Valve Assembly 356
Throttle Pedal 357
Park Brake 357
Park Brake Lever Assembly 358
Steering Orbitrol - Plate Mount 359
Steering Column - Plate Mount 359
Steering Column & Orbitrol - Direct Mount 360
Seat & Side Console 361
Seat Mounting 361
Side Console - Raven SCS 4400 362
Side Console - Raven SCS 4400 363
Switch Panel Assembly - Raven 364
Cabin Isolators 365
EuroCab Spare Parts - Miscellaneous 366
EuroCab Spare Parts - Miscellaneous 367
EuroCab Spare Parts - Window Glass. 368

23 BRAKES 369

Brake Boosters 369
Brake Booster Orientation 370
Brakes - Front 2WD - Caliper & Disc 371
Brakes - Front 4WD - Caliper & Disc 372
Brakes - Front - Axle Mounted Lines 373
Brakes - Front - Axle Mounted Lines 374
Brakes - Rear 375

Chapter 1

CHASSIS

Chassis

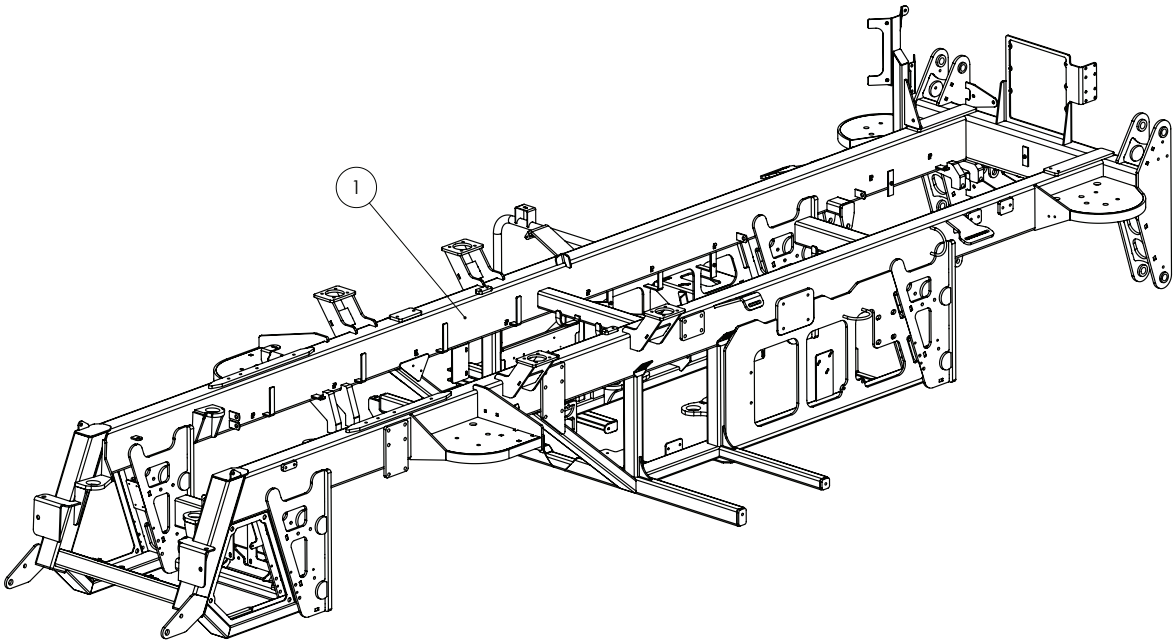

ITEM NO.	PART NUMBER	DESCRIPTION	QTY.
1	GA4660003	Chassis	1

Continued over page

Access Platform Left Side & Boom Rest (Pre - 2021)

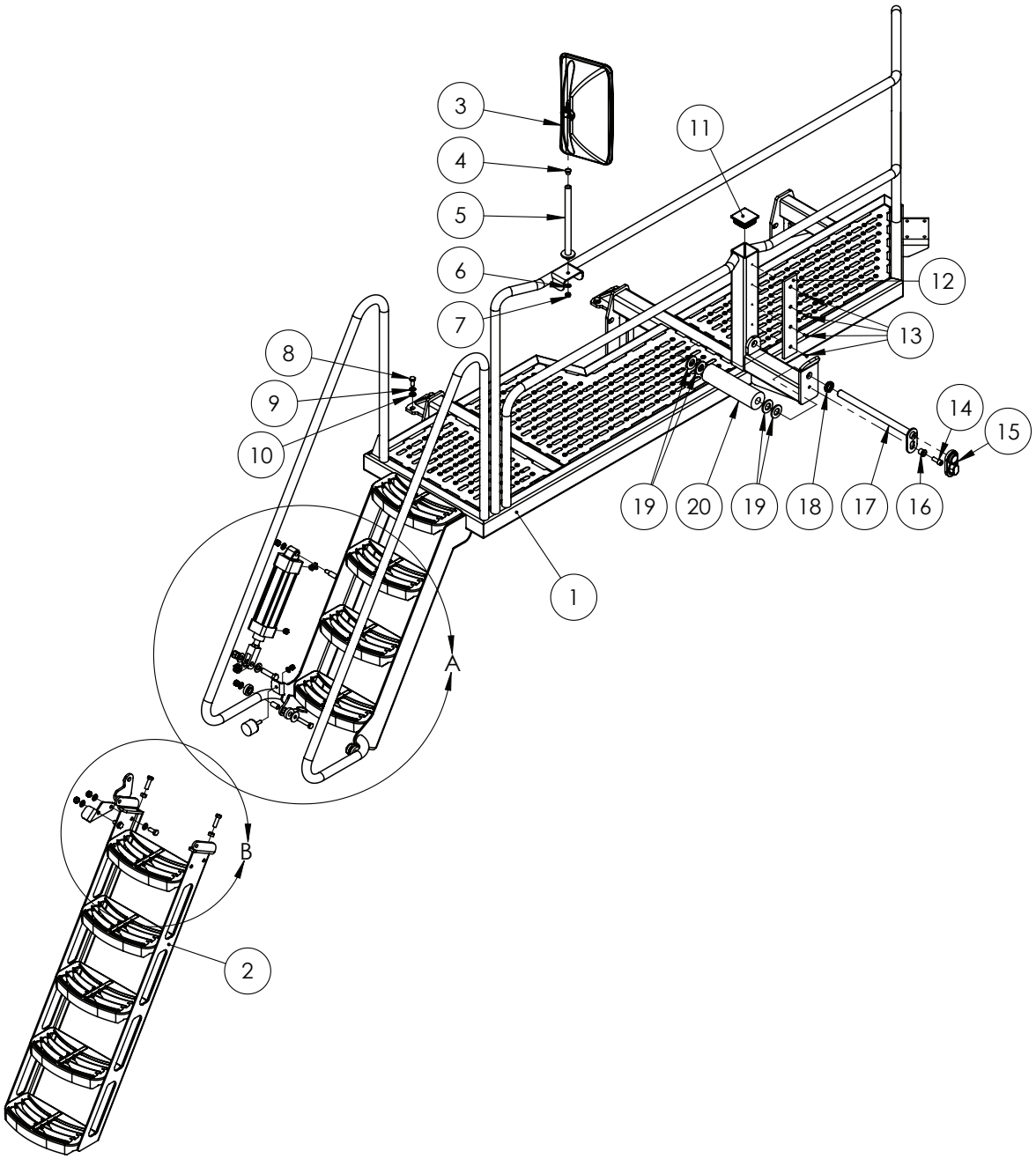

Continued over page

Access Platform Left Side & Boom Rest (Pre - 2021)

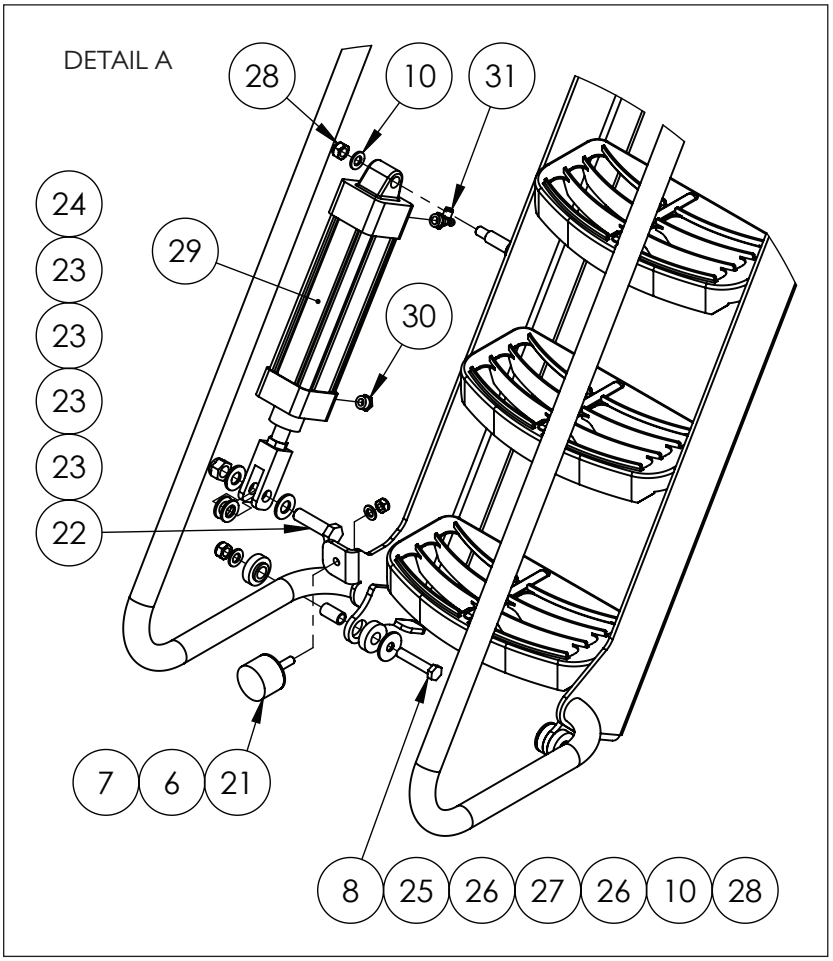

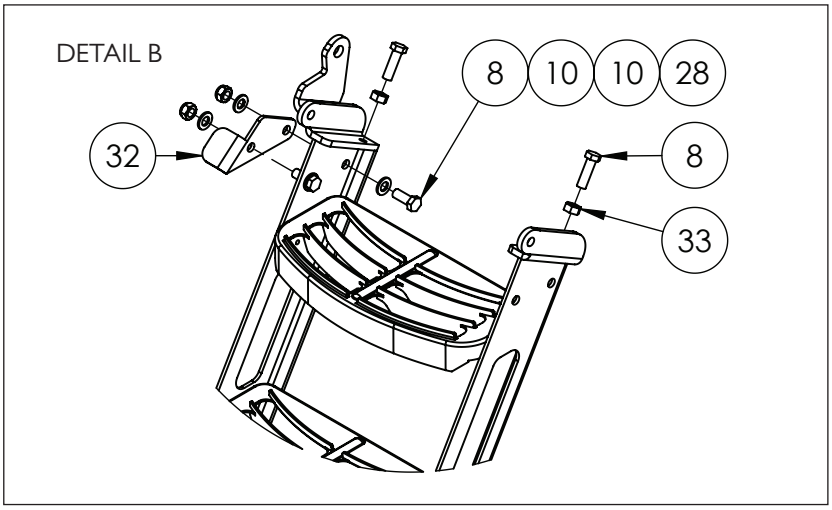

Continued over page

Access Platform Left Side & Boom Rest (Pre - 2021)

ITEM NO.	PART NUMBER	DESCRIPTION	QTY.
1	GA4661830	Platform, LH Cabin Access	1
2	GA4659760	Lower Ladder	1
3	GA5005048	Mirror	1
4	GA5052910	Insert, 16 mm Hole	1
5	GA4660315	Mirror Post	1
6	GA5000117	Washer 10mm Flat SS HD	2
7	GA5000141	Nut M10 Nyloc ZP	2
8	GA5000319	Set Screw M12 x 40 GR8.8 ZP	10
9	GA5000575	Washer 12mm Spring SS	4
10	GA5000577	Washer 12mm Flat SS HD	11
11	GA5052345	End cap, Insert, 75 x 75 mm, black, plastic	1
12	GA5071205	Boom Rest Wear Strip	1
13	GA5051230	CSCS M5 x 16 SS A2-70	4
14	GA5000307	SHCS M12 x 30 GR12.9 ZP	1
15	GA5067885	Pin cover, Black, clip on, plastic	1
16	MACH0152	Bush with shoulder, 12.3 ID x 25 OD x 21 mm long	1
17	GA4658745	Pin suit Boom rest roller	1
18	GA4572135	Spacer bush, 40 OD x 25.8 ID x 9 mm thick	1
19	GA5017659	Washer 1" Flat ZP HD (5mm thick)	4
20	GA5069105	Roller	1
21	GA5052815	Rubber Stopper, Diameter 50 x 35 mm Long, With M10 x 35 Stud	1
22	GA5000941	Bolt M16 x 60 GR8.8 ZP	1
23	GA5001009	Washer 16mm Flat ZP HD	4
24	GA5001029	Nut M16 Nyloc ZP	1
25	GA4505410	Ladder Pivot Bush Retainer Plate, 12.4 ID x 40 OD x 3mm SS	2
26	GA4553030	Bush, Nylon Ladder Pivot	4
27	GA4553025	Bush, Ladder Pivot	2
28	GA5012461	Nut M12 Nyloc ZP	5
29	GA5069674	Pneumatic Cylinder, 63 x 175mm, 3/8" ports, aluminium	1
30	GA7000001	Breather Silencer, 3/8" BSP, Brass, Flat	1
31	GA5015643	Valve, Needle, 6mm push type inlet x 1/4 male BSP thread inlet	1
32	GA4507865	Plate, Ladder Fold Stop, Access Platform	1
33	GA5000559	Nut M12 Hex ZP	2

Access Ladder Assembly (2021 On)

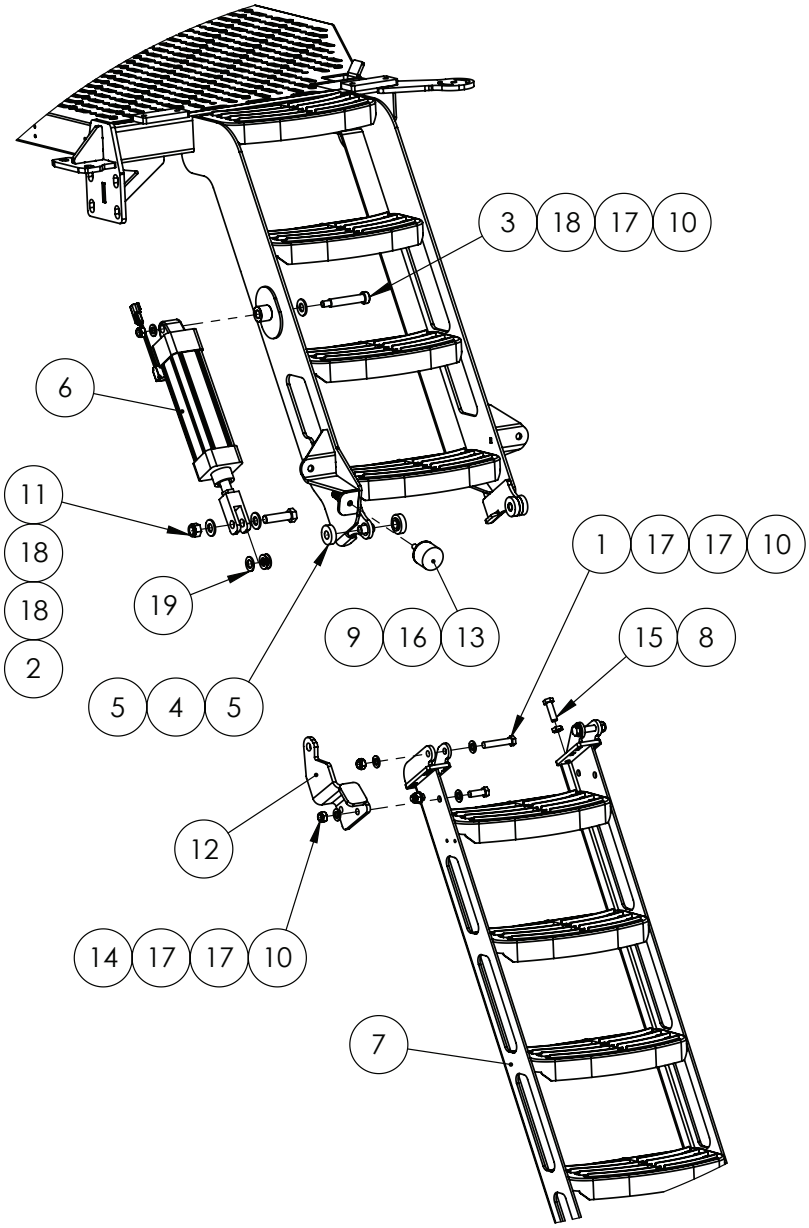

ITEM NO.	PART NUMBER	DESCRIPTION	QTY.
1	GA5000339	Bolt M12 X 65 Gr8.8 Zp	2
2	GA5000941	Bolt M16 X 60 Gr8.8 Zp	1
3	GA5069165	Bolt Shoulder Shcs M16 X 80 Gr12.9 Zp	1
4	GA4553025	Bush Ladder Pivot Sp My13	2
5	GA4553030	Bush Nylon Ladder Pivot Sp My13	4
6	GA4949445	Cylinder, Pneumatic, Ladder, Assembly	1
7	GA4603695	Ladder, G4 G6 G8, Cabin Access, My21	1
8	GA5071280	M12 Plain Nut Half	2
9	GA5000141	Nut M10 Nyloc Zp	1

Access Ladder Assembly (2021 On)

ITEM NO.	PART NUMBER	DESCRIPTION	QTY.
10	GA5012461	Nut M12 Nyloc Zp	5
11	GA5001029	Nut M16 Nyloc Zp	1
12	GA4603700	Plate, Ladder Cylinder Mount, Lh Fitment, MY21	1
13	GA5052815	Rubber Stopper, Diameter 50 X 35 Long, With M10 X 35 Stud	1
14	GA5000311	Set Screw M12 X 35 Gr 8.8 Zp	2
15	GA5000319	Set Screw M12 X 40 Gr8.8 Zp	2
16	GA5000117	Washer 10mm Flat Ss Hd	1
17	GA5000577	Washer 12mm Flat Ss Hd	9
18	GA5001043	Washer 16mm Flat Ss Hd	3
19	GA5069810	Washer- Nylon 16 Id X 30 Od X 2	3

Boom Rest - Right

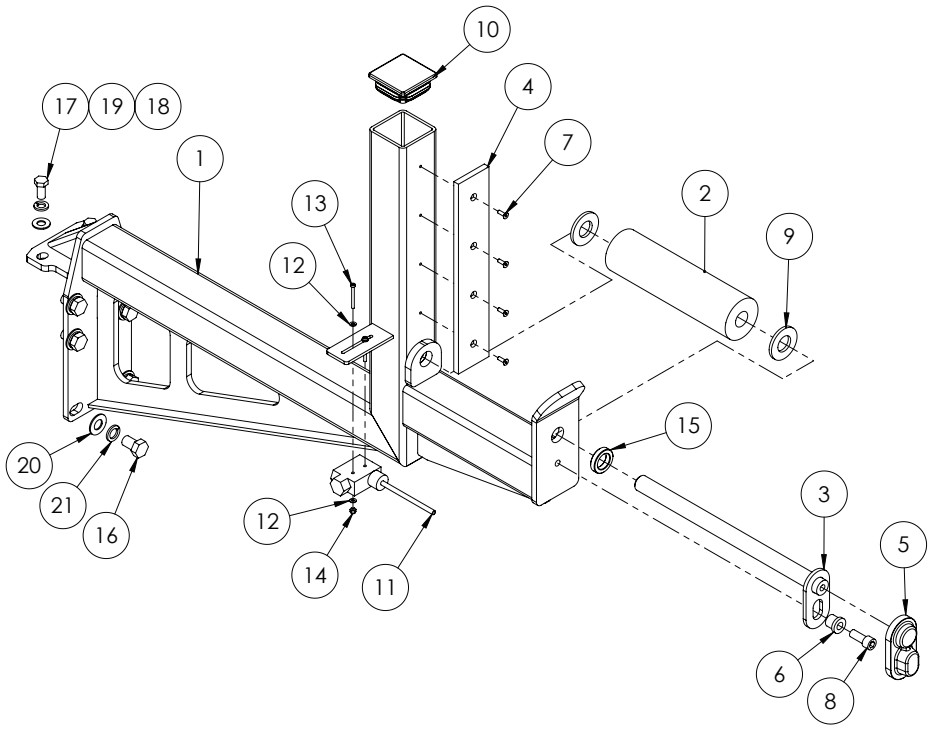

ITEM NO.	PART NUMBER	DESCRIPTION	QTY.
1	GA4660010	Boom Rest RH, G3 G4	1
2	GA5069105	Roller, Boom rest SP 2011	1
3	GA4658745	Pin - suit boom rest roller	1
4	GA5071205	Boom Rest Wear Strip	1
5	GA5067885	Pin cover - plastic	1
6	MACH0152	12mm Bolt Bush suit paralift pins	1
7	GA5051230	FHCS M5 x 16mm SS	4
8	GA5000307	SHCS M12 x 30 GR12.9 ZP	1
9	GA5017659	Washer, 1", Flat, ZP, Heavy duty (5mm thick)	2
10	GA5052345	Insert - Plastic 75 x 75mm	1
11	GA5012129	Limit switch, Flexible arm, Micro, IP65, 10 Amp	1
12	GA5020510	Washer M4 Flat Heavy duty SS	4
13	GA5049800	SHCS M4 x 40	2
14	GA5049025	Nut M4 Nyloc SS	2
15	GA4572135	Paralift spacer bush	1
16	GA5000903	Bolt M16 x 25	6
17	GA5011229	Set screw M12 x 25 HT	2
18	GA5000577	Washer 12mm Flat SS HD	2
19	GA5000575	Washer 12mm Spring SS	2
20	GA5001009	Washer 16mm Flat Zinc	6
21	GA5000961	Washer 16mm Spring ZP	6

Hand Wash Bottle

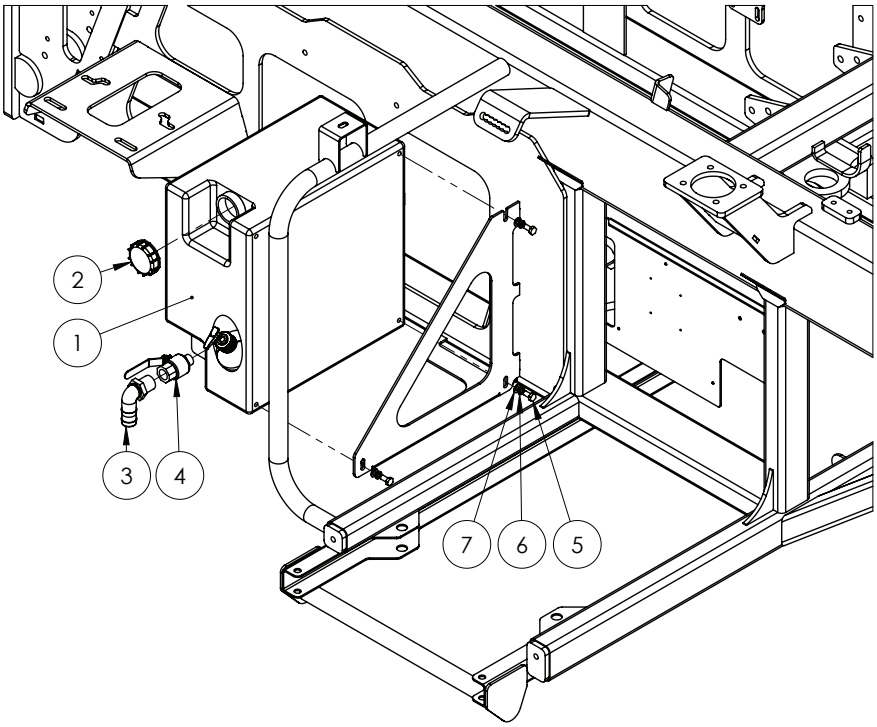

ITEM NO.	PART NUMBER	DESCRIPTION	QTY.
-	GA5051275	Replacement soap bottle	-
1	GA5023525	Hand Wash Tank 23lt	1
2	GA5023296	Lid, Black, Suit ATV & 23L handwash tank	1
3	GA5077716	Hose Barb, Elbow, 90 degree, 3/4" male thread x 1" hose	1
4	GA5018317	Valve, Ball, 20mm, 3/4” male, female, Lever handle, Brass	1
5	GA5011465	Bolt M8 x 16 GR8.8 ZP	3
6	GA5004919	Washer 8mm Spring SS	3
7	GA5003643	Washer 8mm Flat SS HD	3

Tool Box

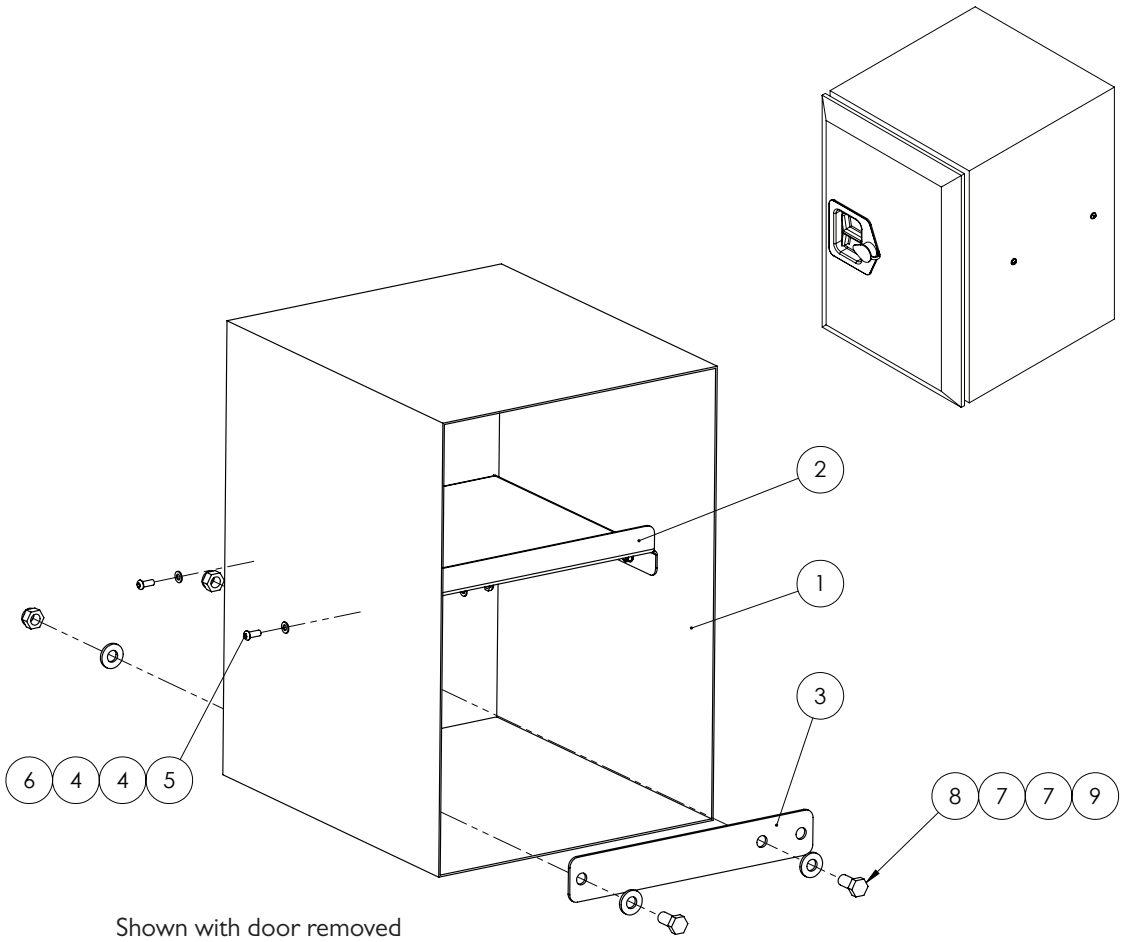

Shown with door removed

ITEM NO.	PART NUMBER	DESCRIPTION	QTY.
1	GA5068675	Tool box suit	1
2	GA4502895	Tool box shelf	1
3	GA4503890	Bracket - Tool box mount - inner	2
4	GA5004437	Washer 6mm Flat SS	8
5	GA5004050	BHCS M6 x 16mm SS	4
6	GA5048115	Nut nyloc M6	4
7	GA5000577	Washer 12mm Flat SS HD	8
8	GA5000295	Set screw M12 x 25 HT	4
9	GA5012461	Nut M12 Nyloc ZP	4

Bonnet

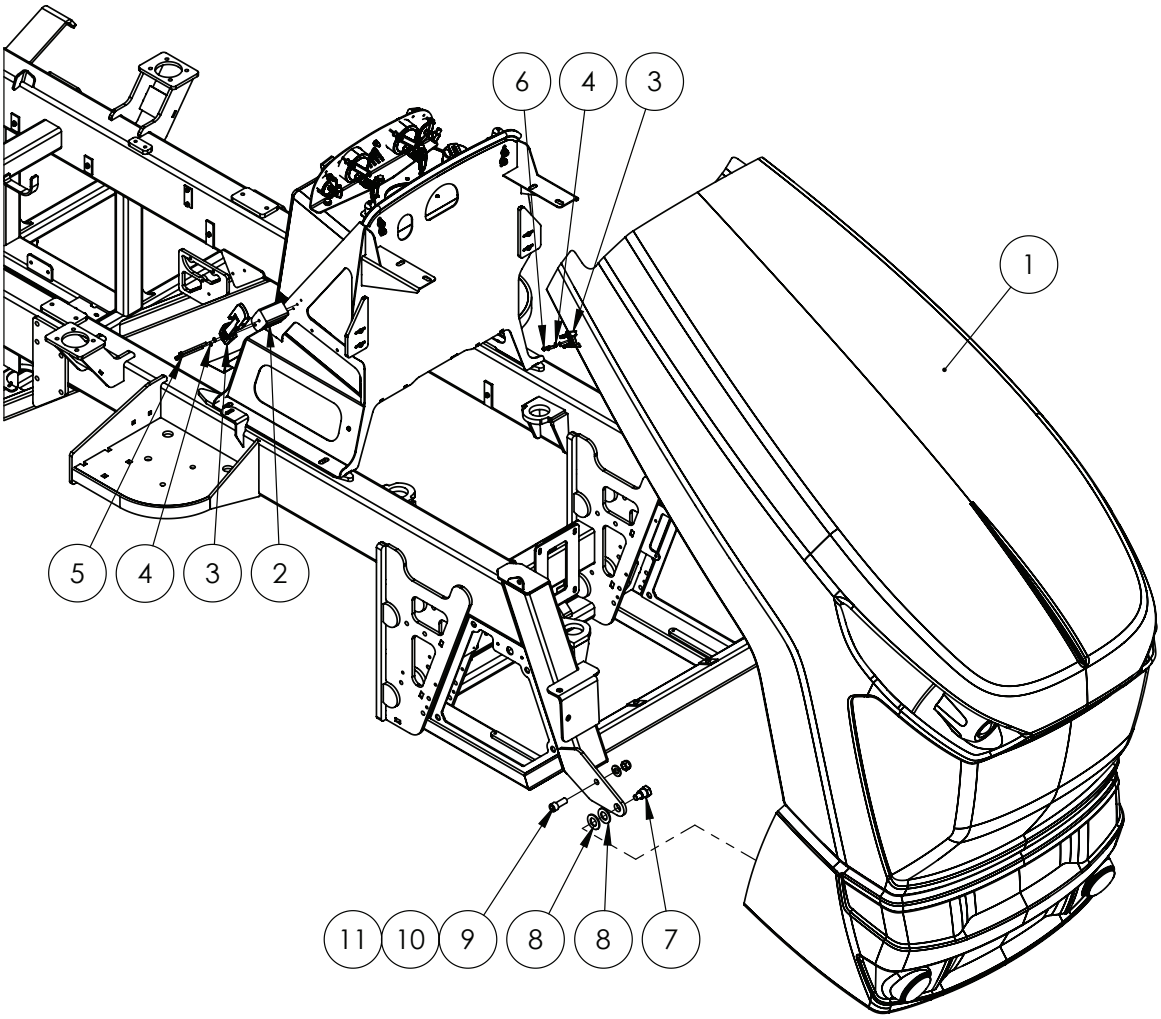

BONNET SPARE PARTS

PART NUMBER	DESCRIPTION
GA3000082	Globe, HB3, 12v, 60w, Narva
GA5075415	Indicator / Running Light Assembly, LED

ITEM NO.	PART NUMBER	DESCRIPTION	QTY.
1	GA5072145	Bonnet Assembly	1
	GA5072720	Bonnet Grill Mesh, Upper, suit GA5072135 and GA5072145	-
2	GA4550177	Spacer block, Bonnet latch, G3 G4, HDPE	2
3	GA5066595	Latch, Suit Crop Cruiser bonnet & ladder	2
4	GA5004437	Washer 6mm Flat SS	9
5	GA5070460	SHCS M6 x 60 SS A2-70	4
6	GA5004053	BHCS M6 x 20 SS A2-70	4
7	GA4552765	Bolt, Shoulder	2
8	GA0500078	Washer, 1” ID x 1 7/8” OD x 1/8” Thick, Nylon	4
9	GA5000925	SHCS M16 x 40 GR12.9 ZP	2
10	GA5001043	Washer 16mm Flat SS HD	2
11	GA5012463	Nut M16 Nyloc SS	2

Battery Tray Covers

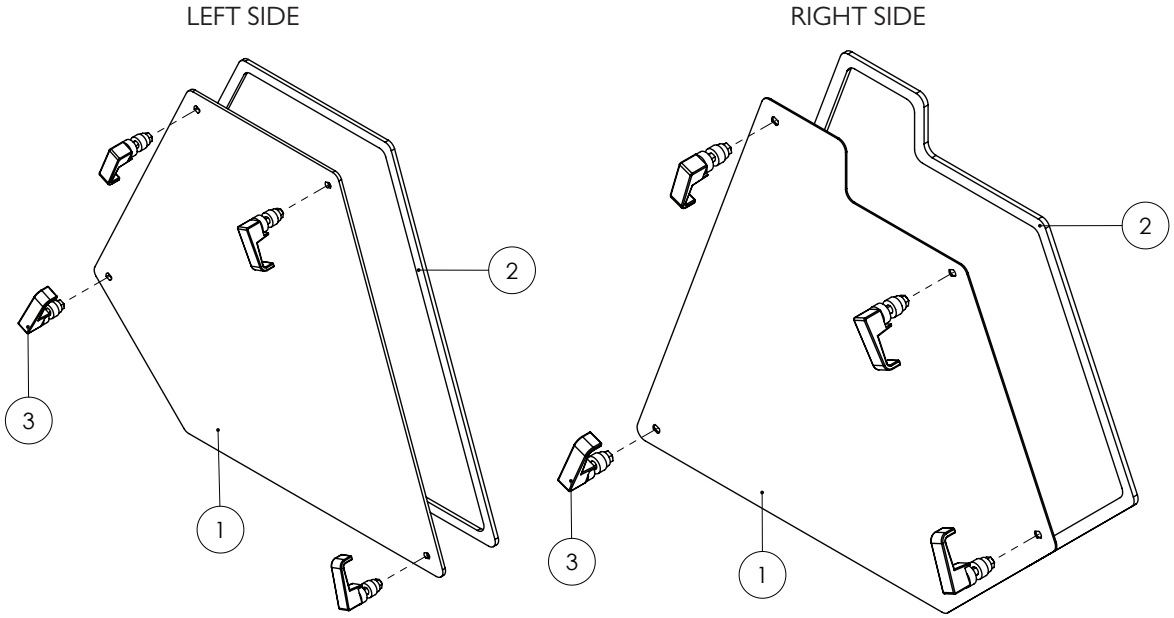

ITEM NO.	PART NUMBER	DESCRIPTION	QTY.
1	GA4402980	Plate, Chassis Cover, Front LH	1
	GA4402975	Plate, Chassis Cover, Front RH	
2	GA5016463	Foam Tape, seal, self adhesive, 12mm Wide x 7.6mm Thick, 3.4m long	1
3	GA5066600	Rawl action latch, quick access fastener, Swell, Black	4

Battery Tray Assembly

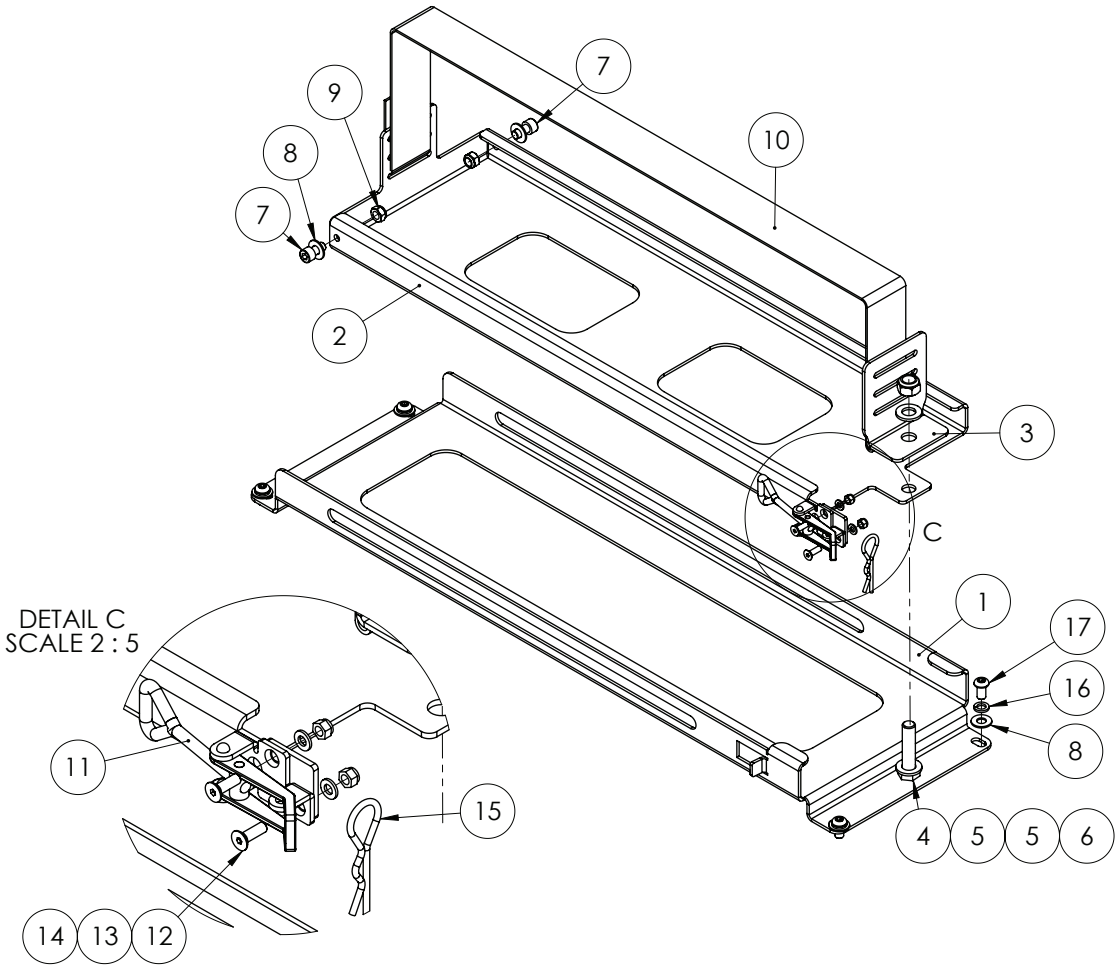

ITEM NO.	PART NUMBER	DESCRIPTION	QTY.
1	GA4500105	Plate, Battery Tray Outer	1
2	GA4500110	Plate, Battery Tray Inner	1
3	F70127A	50mm Tank Strap Bracket	1
4	GA5011237	Set Screw M12 x 50 GR8.8 ZP	1
5	GA5000577	Washer 12mm Flat SS HD	2
6	GA5012461	Nut M12 Nyloc ZP	1
7	GA5050690	SHCS M8 x 16 GR12.9 ZP	2
8	GA5003643	Washer 8mm Flat ZP HD	6
9	GA5004917	Nut M8 Nyloc ZP	2
10	GA5003859	Strap, Tank, 50mm, Goldacres branded - Cut to 1150 mm	1
11	GA5007071	Latch, Adjustable, Induction Hopper Lid	1
12	GA5051230	CSCS M5 x 16 SS A2-70	2
13	GA5003983	Washer 5mm Flat SS	2
14	GA5003974	Nut M5 Nyloc ZP	2
15	GA5003487	R Clip S10 3mm	1
16	GA5004919	Washer 8mm Spring SS	4
17	GA5004696	BHCS M8 x 16 SS A2-70	2
	GA5011473	BHCS M8 x 25 SS A2-70	2

Window Washer Bottle

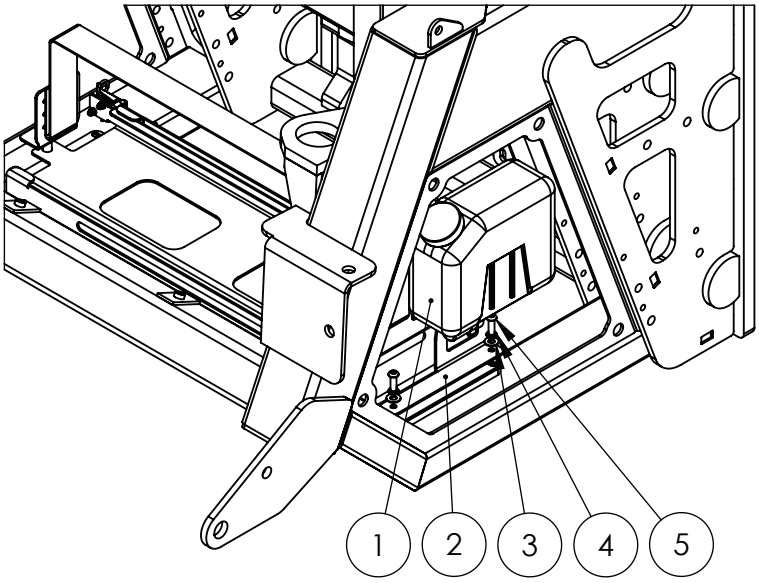

ITEM NO.	PART NUMBER	DESCRIPTION	QTY.
1	GA5071645	Washer Bottle, Windscreen	1
2	GA4402705	Plate, Washer Bottle Mount	1
3	GA5003643	Washer 8mm Flat SS HD	2
4	GA5004919	Washer 8mm Spring SS	2
5	GA5011473	BHCS M8 x 25 SS A2-70	2

ECU Mounting

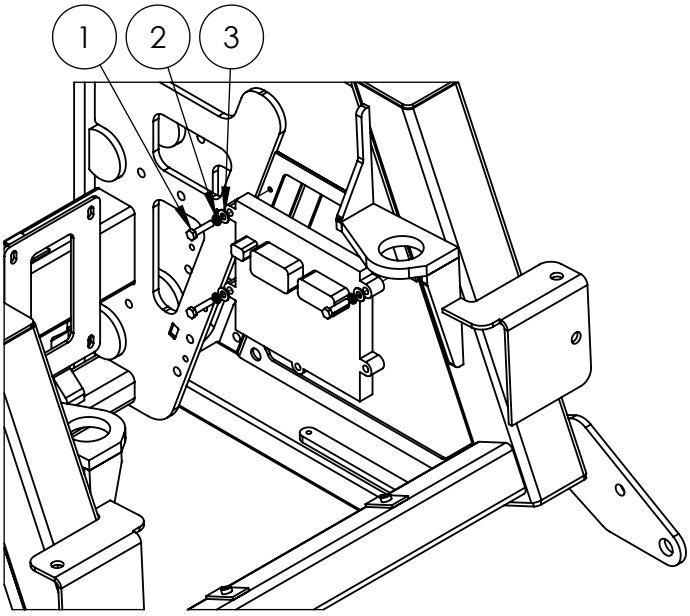

ITEM NO.	PART NUMBER	DESCRIPTION	QTY.
1	GA5011481	Bolt M8 x 35 GR8.8 ZP	3
2	GA5004919	Washer 8mm Spring SS	3
3	GA5003643	Washer 8mm Flat SS HD	3

Drain Points

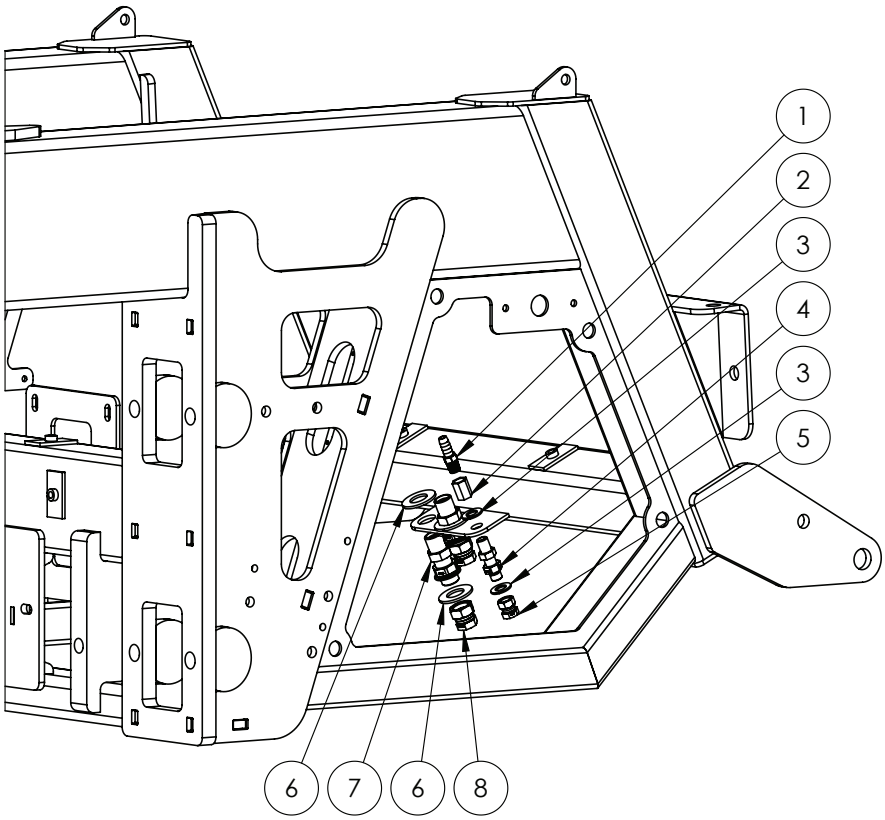

ITEM NO.	PART NUMBER	DESCRIPTION	QTY.
1	GA5020875	Hose barb, 1/4" male thread x 1/2" barb, Brass	1
2	GA5066940	Socket, 1/4" female thread, Hex, Brass	1
3	GA5017655	Washer 1/2" Flat SS	2
4	GA3500249	Hydraulic adaptor, Bulkhead nipple, 1/4” BSPP male x 1/4” BSPP male	1
5	GA3500277	Cap, Swivel, 1/4" BSPP female	1
6	GA5001045	Washer 3/4" Flat ZP	4
7	GAS99-603	Hydraulic adaptor, Bulkhead nipple, 1/2" BSP male x 1/2" BSP male	2
8	GA3500278	Cap, Swivel, 1/2" BSPP female	2

Pneumatic Storage Tanks

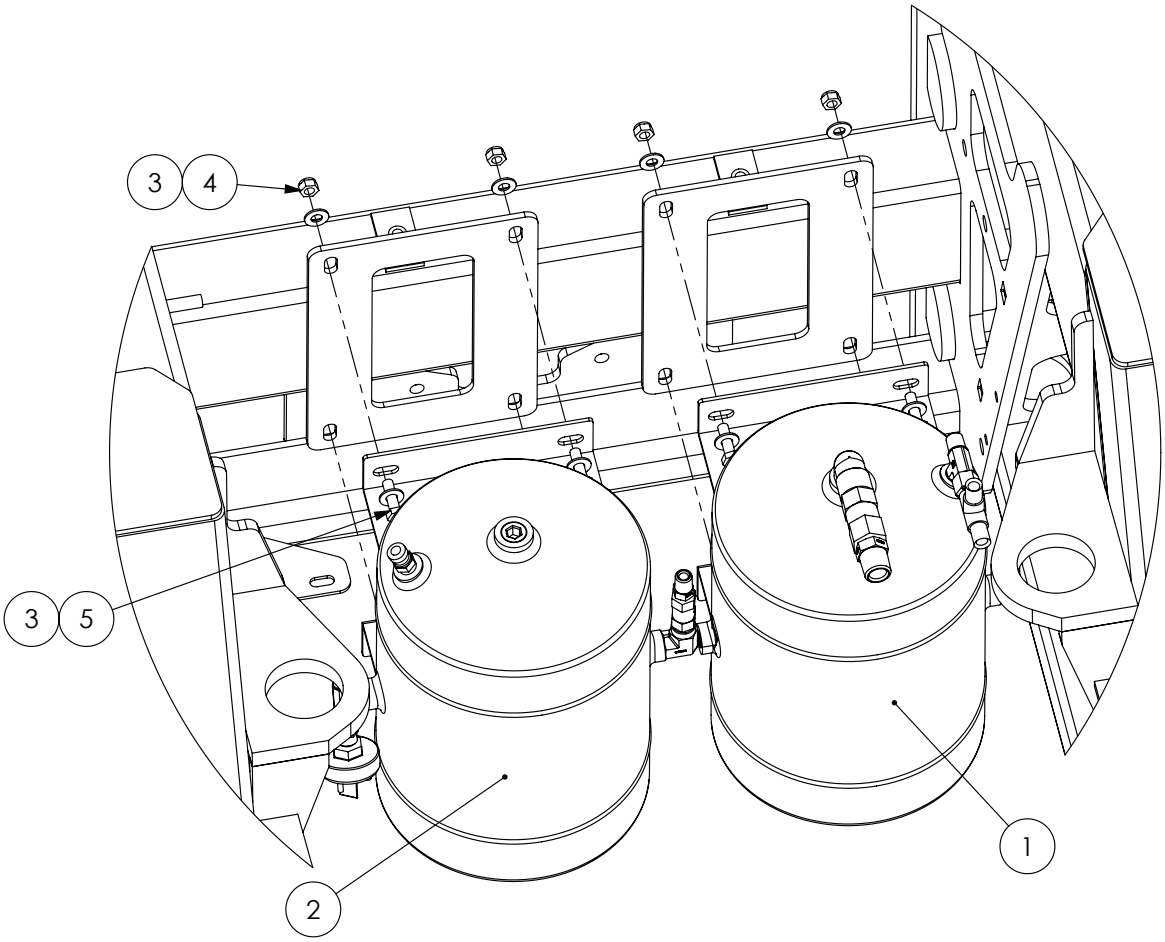

ITEM NO.	PART NUMBER	DESCRIPTION	QTY.
1	*	Pneumatic Tank 1	1
2	*	Pneumatic Tank 2	1
3	GA5003643	Washer 8mm Flat HD	16
4	GA5004917	Nut M8 Nyloc ZP	8
5	GA5011475	Bolt M8 x 30 GR8.8 ZP	8

* Sub-assembly on following pages

Pneumatic Tank 1

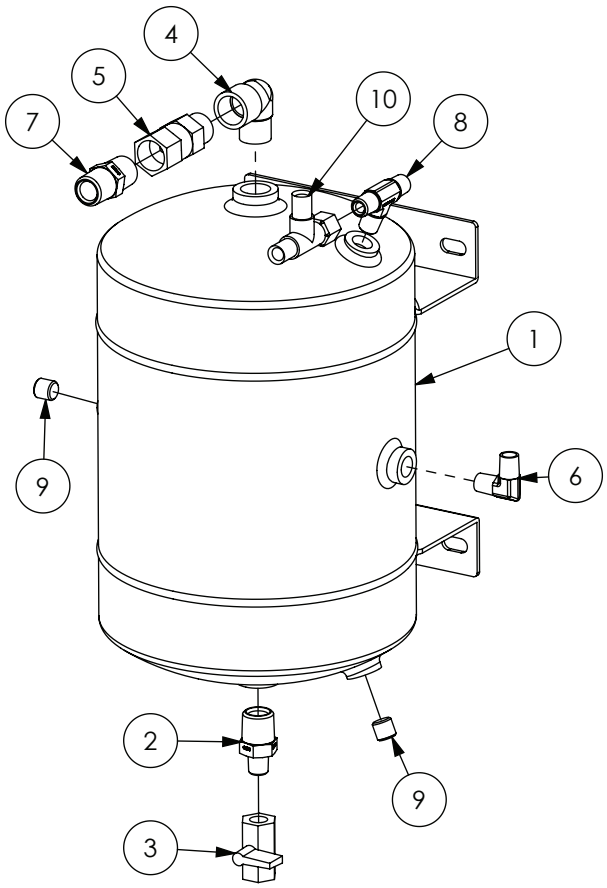

ITEM NO.	PART NUMBER	DESCRIPTION	QTY.
1	GA5070310	Air tank, Large, Suit Crop Cruiser brake pod	1
2	GA3500221	Hydraulic adaptor, Nipple, 1/2” BSPT male x 1/4” BSPT male	1
3	GA5018321	Valve, Ball, 1/4 female, Black Lever handle, Chromed	1
4	GA5048150	Plumbing adaptor, Elbow, 90 degree, 1/2" male thread x 1/2" female thread, Cast	1
5	GA5014795	SC3 single check valve 1/2" M/F	1
6	GA3500258	Hydraulic coupling, Elbow, 90 degree, 1/4” BSPT male x 1/4” BSPT male	1
7	GA3500223	Hydraulic adaptor, Nipple, 1/2” BSPT male x 1/2” BSPT male	1
8	GA3500269	Hydraulic adaptor, Tee, 1/4” BSPT male x 1/4” BSPT male x 1/4” BSPT male	1
9	GA5070300	Plug-flush fit 1/4" BSPT suit air tanks	2
10	GA3500199	Hydraulic adaptor, Tee, 1/4" BSPT male x 1/4" BSPT male x 1/4" BSPP female	1

Pneumatic Tank 2

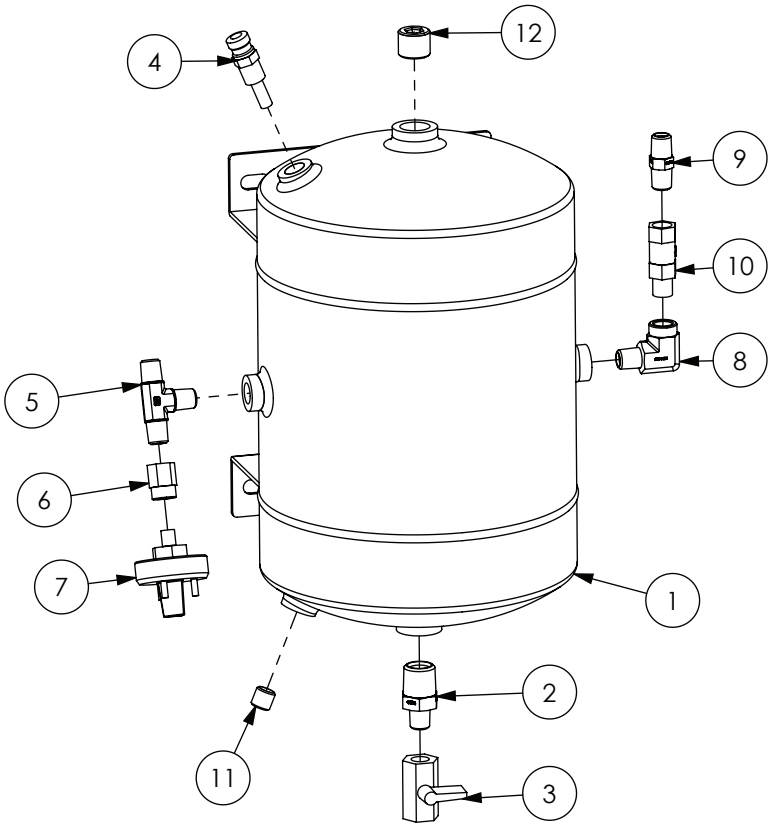

ITEM NO.	PART NUMBER	DESCRIPTION	QTY.
1	GA5070310	Air tank, Large, Suit Crop Cruiser brake pod	1
2	GA3500221	Hydraulic adaptor, Nipple, 1/2” BSPT male x 1/4” BSPT male	1
3	GA5018321	Valve, Ball, 1/4" female, Black Lever handle, Chromed	1
4	GA5017369	Pressure Relief Valve	1
5	GA3500269	Hydraulic adaptor, Tee, 1/4” BSPT male x 1/4” BSPT male x 1/4” BSPT male	1
6	GA5069925	1/4" - 1/8" BSPT Female reducing socket	1
7	GA5011059	Pressure switch, Low air, 55 PSI actuation, SPDT, 1/8"	1
8	GA3500209	Hydraulic adaptor, Elbow, 90 degree, 1/4” BSPT male x 1/4” BSPT female	1
9	GA3500218	Hydraulic adaptor, Nipple, 1/4” BSPT male x 1/4” BSPT male	1
10	GA5014796	Valve, Check, Pneumatic, 1/4" thread female inlet & male outlet	1
11	GA5070300	Plug-flush fit 1/4” BSPT suit air tanks	1
12	GA5070305	Plug-flush fit 1/2” BSPT suit air tanks	1

Fuel Tank Ladder

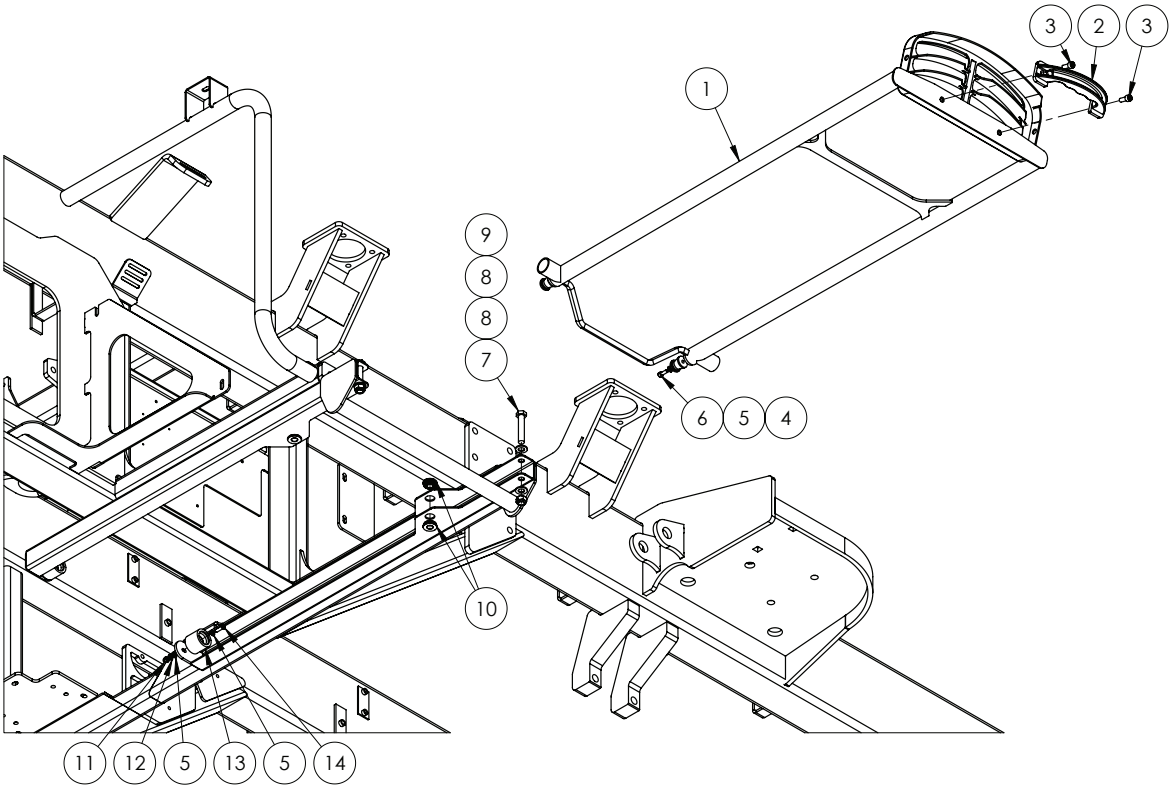

ITEM NO.	PART NUMBER	DESCRIPTION	QTY.
1	GA4600790	Ladder, Fuel Tank	1
2	GA5009841	Handle, Black, Heavy duty, Polyethylene	1
3	GA5004707	SHCS M8 x 20 GR12.9 ZP	2
4	GA5011607	Male rubber door holder	2
5	GA5004437	Washer 6mm Flat SS	6
6	GA5048480	SHCS M6 x 16 SS A2-70	2
7	GA5000339	Bolt M12 x 65 GR8.8 ZP	2
8	GA5000577	Washer 12mm Flat SS HD	4
9	GA5012461	Nut M12 Nyloc ZP	2
10	GA5012199	29mm Neoprene Grommet	4
11	GA5048465	M6 Dome Nut ZP	2
12	GA5004447	Washer 6mm Spring SS	2
13	GA5008629	Female rubber door holder (black)	2
14	GA5004053	BHCS M6 x 20 SS A2-70	2

Tow Bar

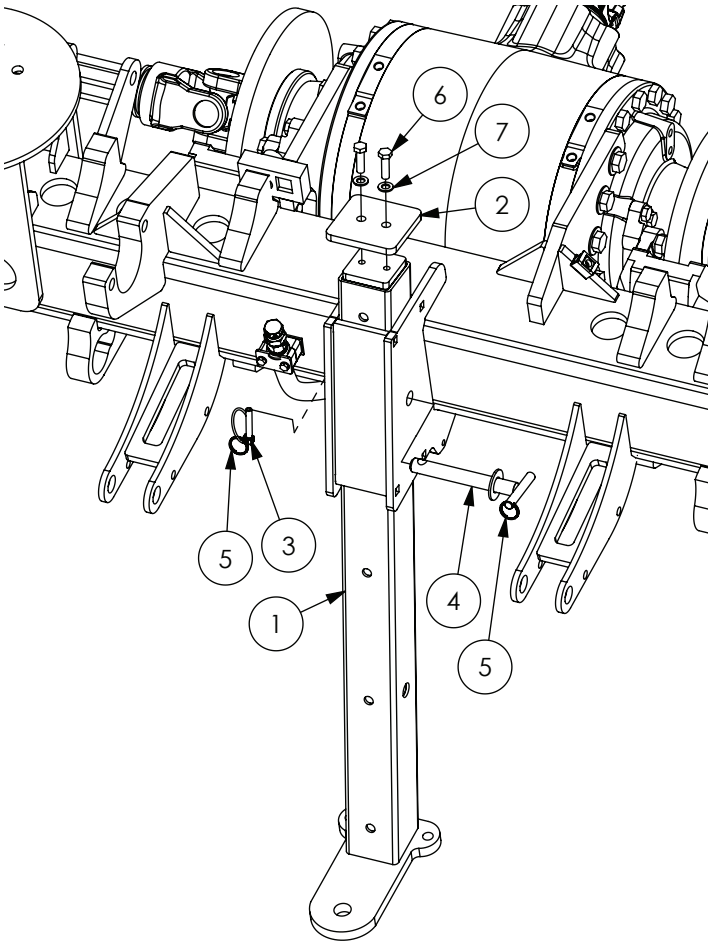

ITEM NO.	PART NUMBER	DESCRIPTION	QTY.
1	GA4660665	Tow Bar, Rear Axle	1
2	GA4504175	Plate - Top keeper, Tow bar	1
3	GA5010905	Linch pin, 7/16" OD x 45 mm long	1
4	GA4659185	Pin, Tow Bar, Self Propelled	1
5	GA5002077	25mm Key Ring SS	2
6	GA5006111	Bolt M10 x 35 Gr8.8	2
7	GA5000117	Washer 10mm Flat SS HD	2
8	GA5001491	Chain 2mm x 20 SS 316 x 20 links (not shown)	0.25

PUMPS

Spray Pump - Zeta 260

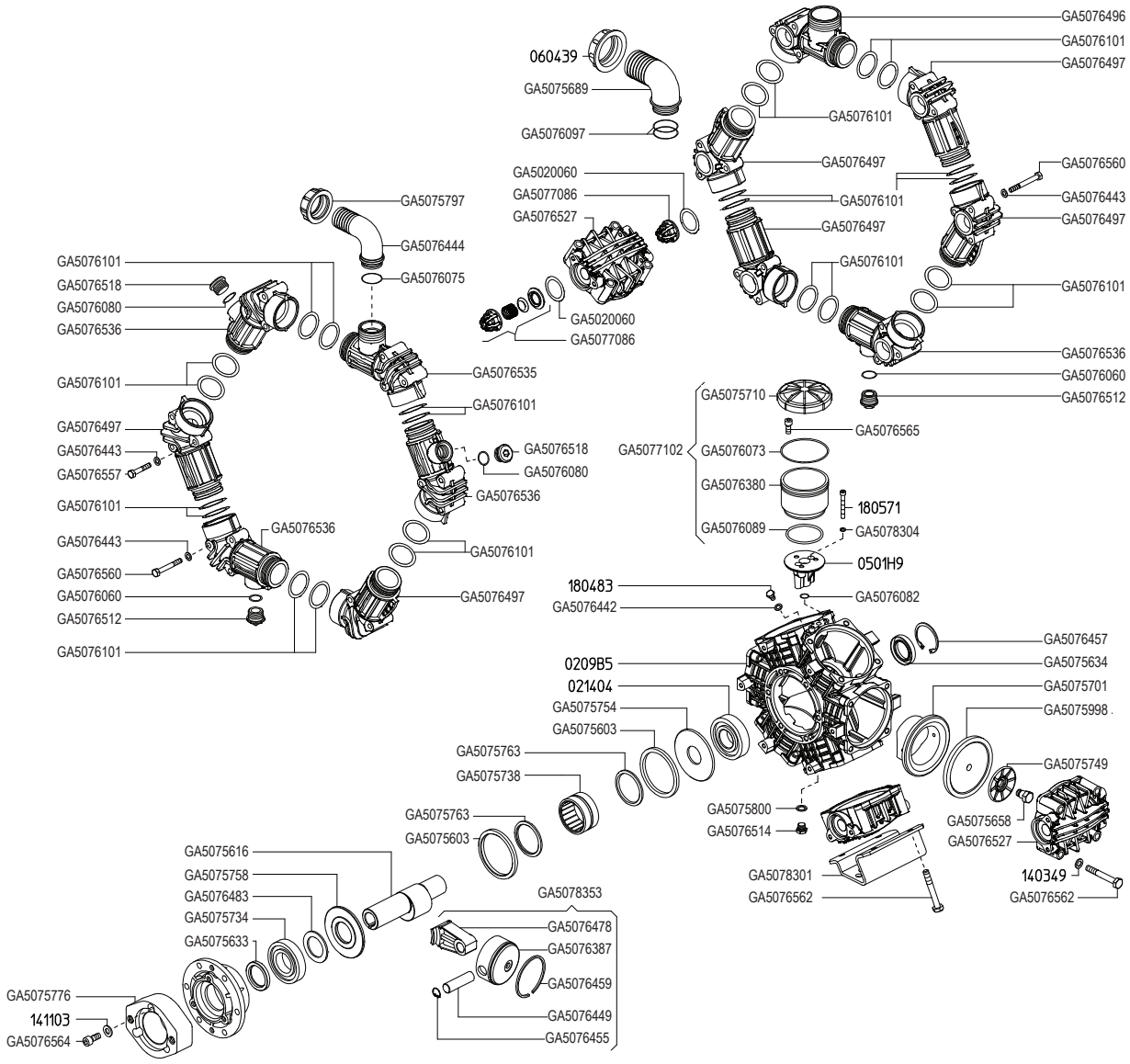

PUMP ASSEMBLY

PART NUMBER	DESCRIPTION	QTY.
GA5054500	Pump Zeta 260 MI-1	1

PUMP SERVICE PARTS

PART NUMBER	DESCRIPTION
GA5077793	Pump Diaphragm Kit suit Zeta 260 and RO250 Udor Pumps
GA5077792	Pump rebuild kit, includes diaphragms, seals & valves, Suits both Zeta 260 and RO250 in PTO and Hyd Drive
GA5023115	Seal kit, 60cc & 80cc hydraulic motor, GA5009525 and GA5047515

Spray Pump - Zeta 260 - Hydraulic Drive

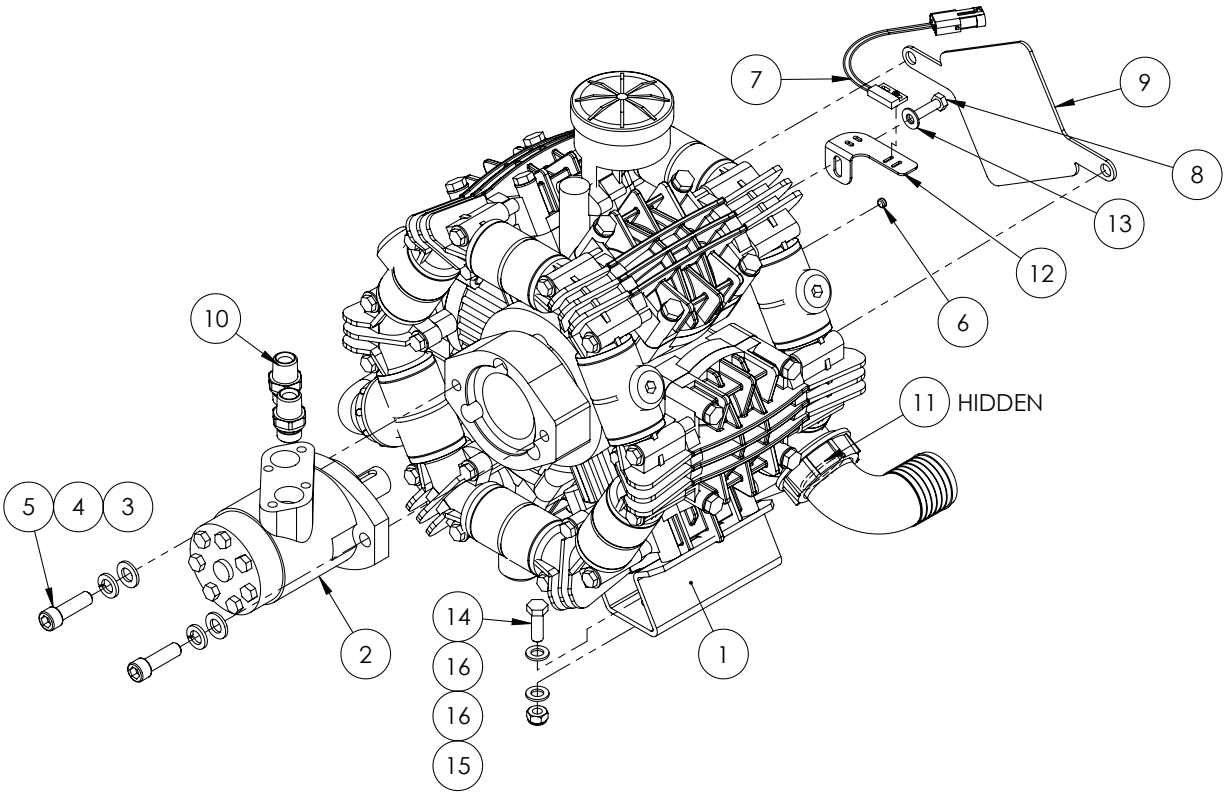

ITEM NO.	PART NUMBER	DESCRIPTION	QTY.
1	GA5054500	Pump Zeta 260 MI-1	1
2	GA5009525	Motor, Hydraulic, 60cc/rev, 25.4mm shaft, Suit SP spray pump drive.	1
3	GA5000577	Washer 12mm Flat SS HD	2
4	GA5000575	Washer 12mm Spring SS	2
5	GA5000321	SHCS M12 x 40 GR12.9 ZP	2
6	GA5016169	Magnet, High strength, 12mm diameter x 1.5mm thick	1
7	GA5076307	Pump RPM sensor with Connector suit 4400/4070	1
8	GA5011475	Bolt M8 x 30 GR8.8 ZP	1
9	PUMPCOVER250	Plate, Rear Pump Shaft Cover, RO250, Zeta 260 and 300	1
10	GA3500310	Hydraulic adaptor, Nipple, 1/2” BSPT male x 1/2” BSPP male with o-ring	2
11	GA5048385	O ring, 42.5 x 2.62 mm, BS131, suit 2" hose barb	1
12	GA4525010	RPM sensor mount bracket, suit Udor MI pump	1
13	GA5003643	Washer 8mm Flat SS HD	1
14	GA5065455	Bolt M10 x 30 GR8.8 ZP	4
15	GA5000141	Nut M10 Nyloc ZP	4
16	GA5000117	Washer 10mm Flat SS HD	8

Hydraulic Fill Pump

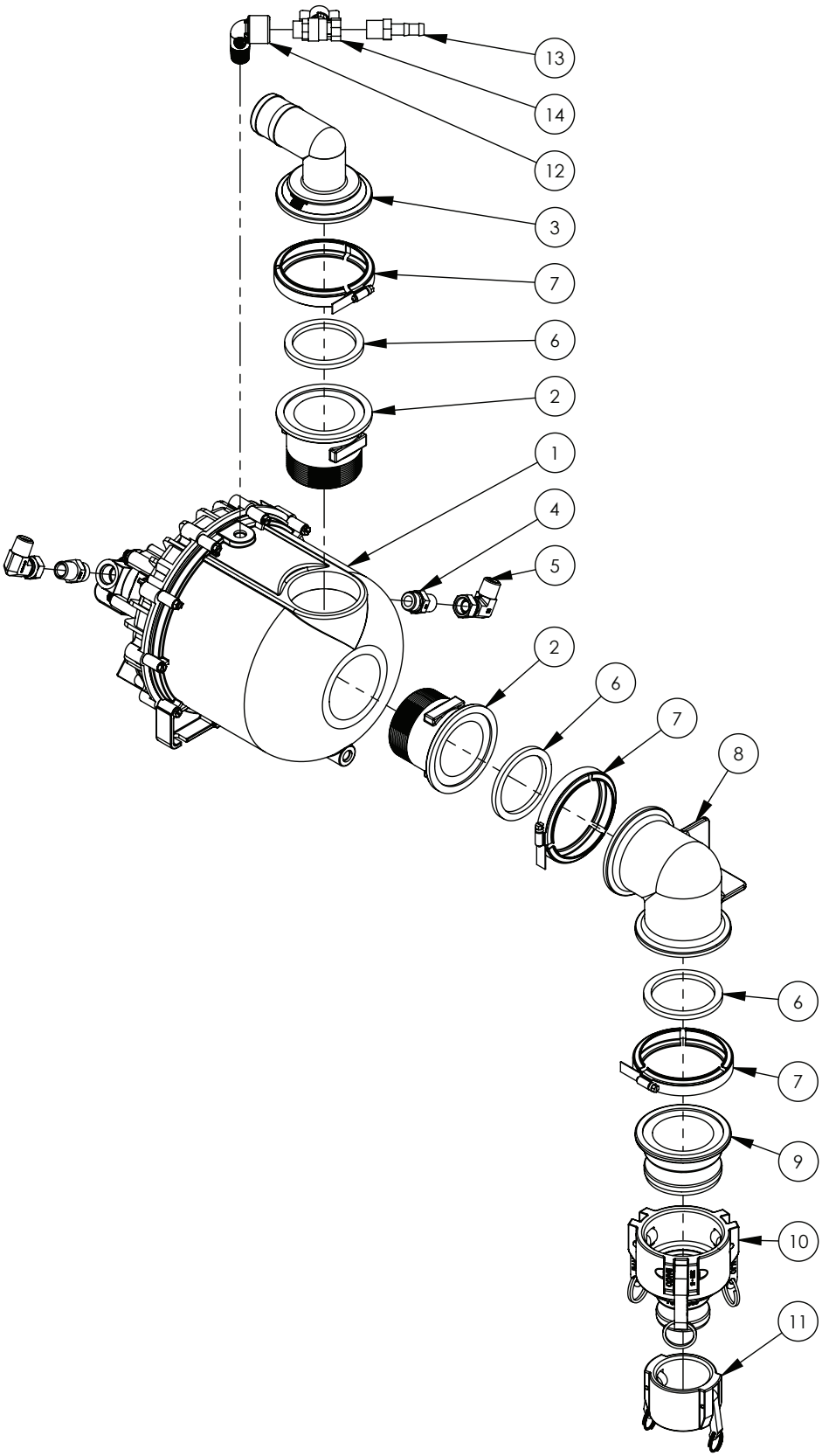

Continued over page

Hydraulic Fill Pump

SPARE PARTS

PART NUMBER	DESCRIPTION
GA5072631	Pump casing, Rear, Poly 3” BSP, Transfer, Viton, Hydraulic drive, GA5072085
GA5072605	Shaft seals, Carbon ceramic, Pump, Poly 3” BSP, Transfer, Viton, Hydraulic drive
GA5072610	Impeller, High volume, Pump, Poly 3” BSP, Transfer, Viton, Hydraulic drive
GA5072620	Drain plug, Pump, Poly 3” BSP, Transfer, Viton, Hydraulic drive
GA5072625	Filler plug, Pump, Poly 3” BSP, Transfer, Viton, Hydraulic drive
GA5072630	Pump casing, Front, Poly 3” BSP, Transfer, Viton, Hydraulic drive
GA5072600	Seal conversion kit, Pump, Poly 3” BSP, Transfer, Viton, Hydraulic drive
GA5072075	Seal kit, Pump, Poly 3” BSP, Service Kit, No Mech Seal

ITEM NO.	PART NUMBER	DESCRIPTION	QTY.
1	GA5072085	Pump, Poly 3” BSP, transfer, Viton, Hydraulic drive	1
2	GA5077876	Plumbing Fitting, 3” Flange to 3” BSP Thread, Banjo	2
3	GA5077871	Hose barb, Elbow, 90 degree, 3” flange x 2” hose barb, Banjo	1
4	GA3500364	Hydraulic adaptor, Nipple, 1/2” BSPT male x 7/8” UN male O-ring	2
5	GA3500333	Hydraulic adapter, Elbow, 90 degree, 1/2” male x 1/2” female swivel	2
6	GA5076723	Seal, EPDM, Suit 3" flange fitting, Banjo	3
7	FC300	Clamp, 3” Flange Manifold, Banjo	3
8	GA5077877	3” Flange X 3”Flange-90 Degree	1
9	GA5077873	3" Male Adapter X 3" Manifold	1
10	GA5076728	Cam lever, 3" female coupling x 2" male coupling, Banjo	1
11	GA5076609	Cam lever, 2" female cap, Banjo	1
12	GA5078133	Street elbow, 90 degree, 1/2" female thread x 1/2" male thread, Banjo	1
13	GA5077702	Hose barb, Straight, 1/2" male thread x 1/2" hose, Banjo	1
14	GA5020615	Valve, Ball, 12mm, 1/2" Male, Female Butterfly, Brass	1

Chapter 3

FLUSH TANK

Flush Tank Mounting

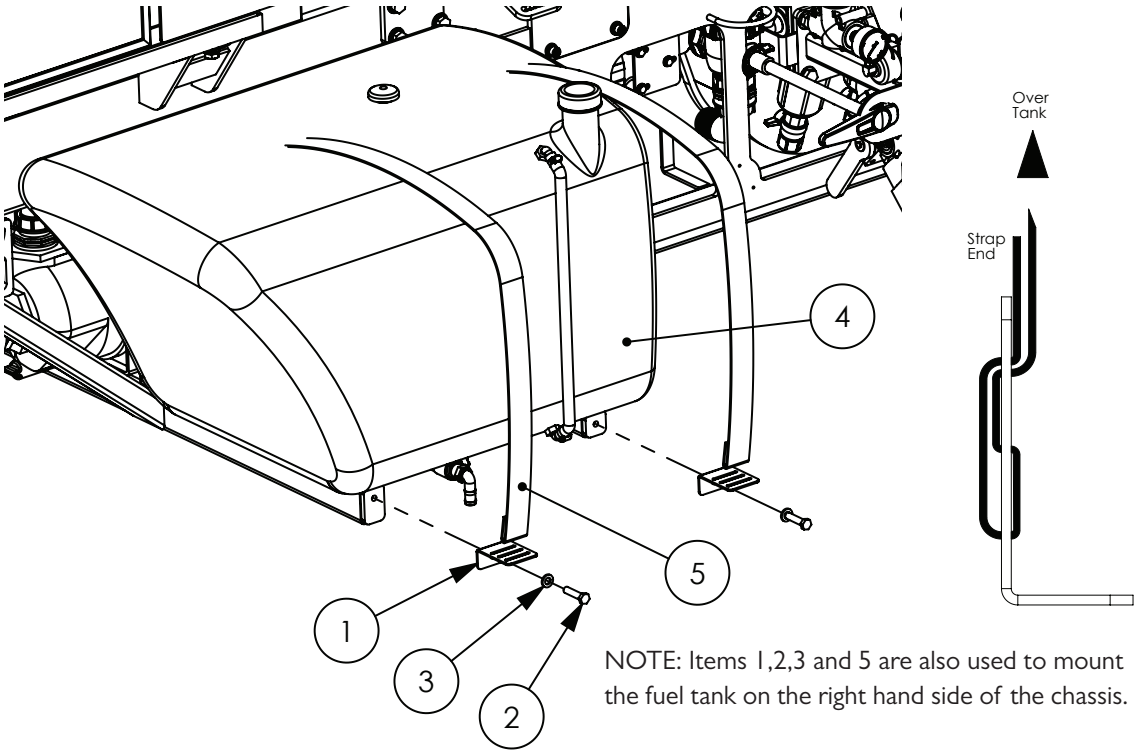

NOTE: Items 1,2,3 and 5 are also used to mount the fuel tank on the right hand side of the chassis.

ITEM NO.	PART NUMBER	DESCRIPTION	QTY.
1	F70127A	Bracket, Tank strap, 50mm	2
2	GA5011239	Bolt, M12 x 50, ZP GR 8.8	2
3	GA5000577	Washer 12mm Flat SS HD	2
4	*	Flush Tank Assembly	1
5	GA5003859	Strap, Tank, 50mm, Goldacres branded - Cut 1500mm	2

* Sub-assembly on following pages

Flush Tank Assembly

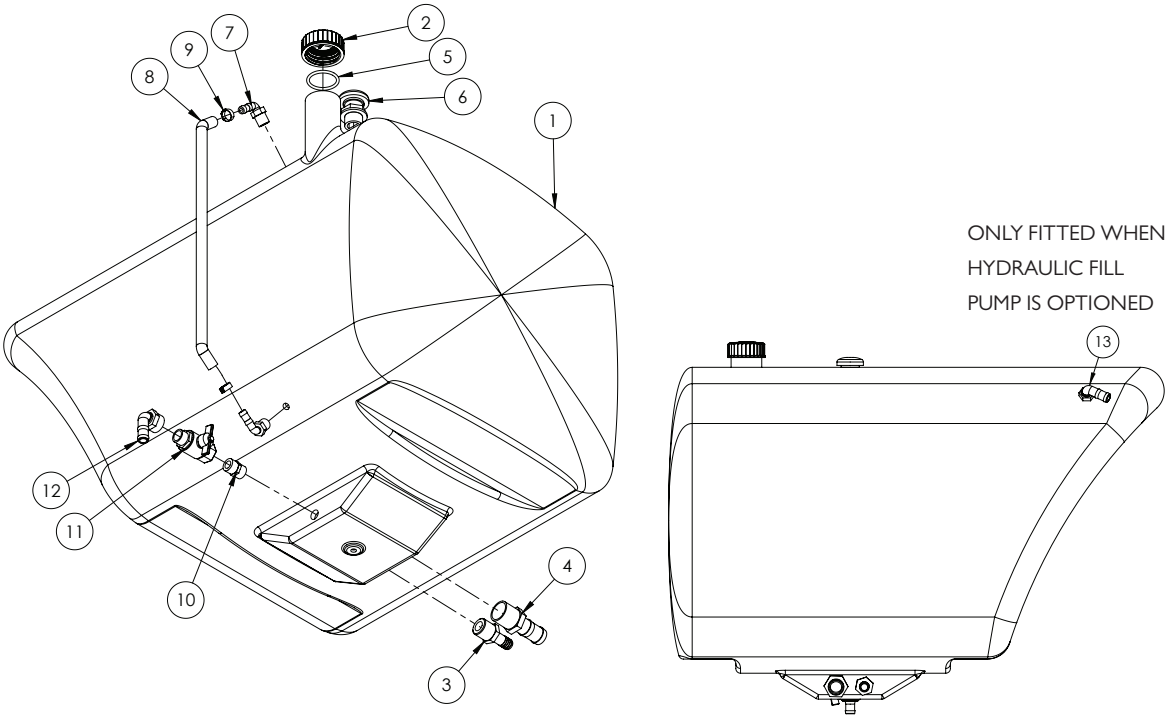

ITEM NO.	PART NUMBER	DESCRIPTION	QTY.
1	GA5071160	Tank, Fresh Water, 300L, G3 G4 Series, Bare	1
2	GA5075400	Cap, Tank, Plastic, Lid, M65.5 x 8 Thread, Black, Goldacres Logo, O-Ring Not Included	1
3	GA5077721	Hose barb, Straight, 1” male thread x 3/4” hose, Banjo	1
4	GA5077724	Hose barb, Straight, 1 1/4” male thread x 1 1/4” hose, Banjo	1
5	GA5009187	O ring, 60 x 5.5mm, suits exacta tank cap	1
6	GA5077045	Breather valve, Labyrinth type, 1” male thread, Arag	1
7	GA5077708	Hose barb, Elbow, 90 degree, 1/2” male thread x 1/2” hose, Banjo	2
8	GA2000209	Hose, Clear, 12mm, Sight tube - Cut 600 mm	1
9	GA5007231	Hose clamp, Cobra type, 1/2”	2
10	GA5077913	Nipple, 3/4” male x 3/4” male, Short, Banjo	1
11	GA5018315	Valve, Ball, 20mm, 3/4" male, female, Black Butterfly handle, Brass	1
12	GA5077746	Hose barb, Elbow, 90 degree, 3/4” female thread x 3/4” hose, Banjo	1
13	GA5077717	Hose barb, Elbow, 90 degree, 3/4” male thread x 3/4” hose, Banjo	1

Flush Tank - Check Valve Assembly

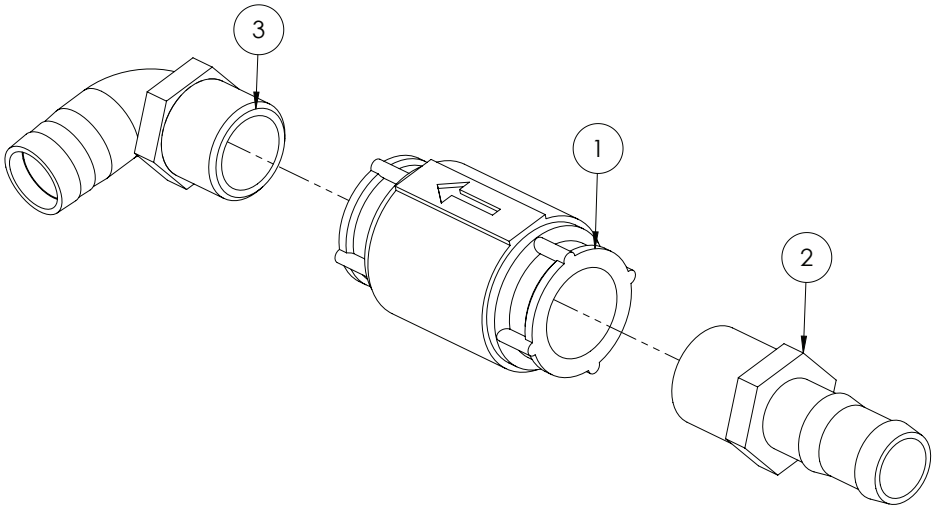

ITEM NO.	PART NUMBER	DESCRIPTION	QTY.
1	GA5017361	Non return valve 1 1/4"	1
2	GA5077724	1 1/4" MPT x 1 1/4" Hose Shank	1
3	GA5077730	90 degree Poly Hose Barb Elbow 1 1/4”	1

Chapter 4

RH POD

Not Fitted

Chapter 5

LH POD

EZ Control Station - Mounting

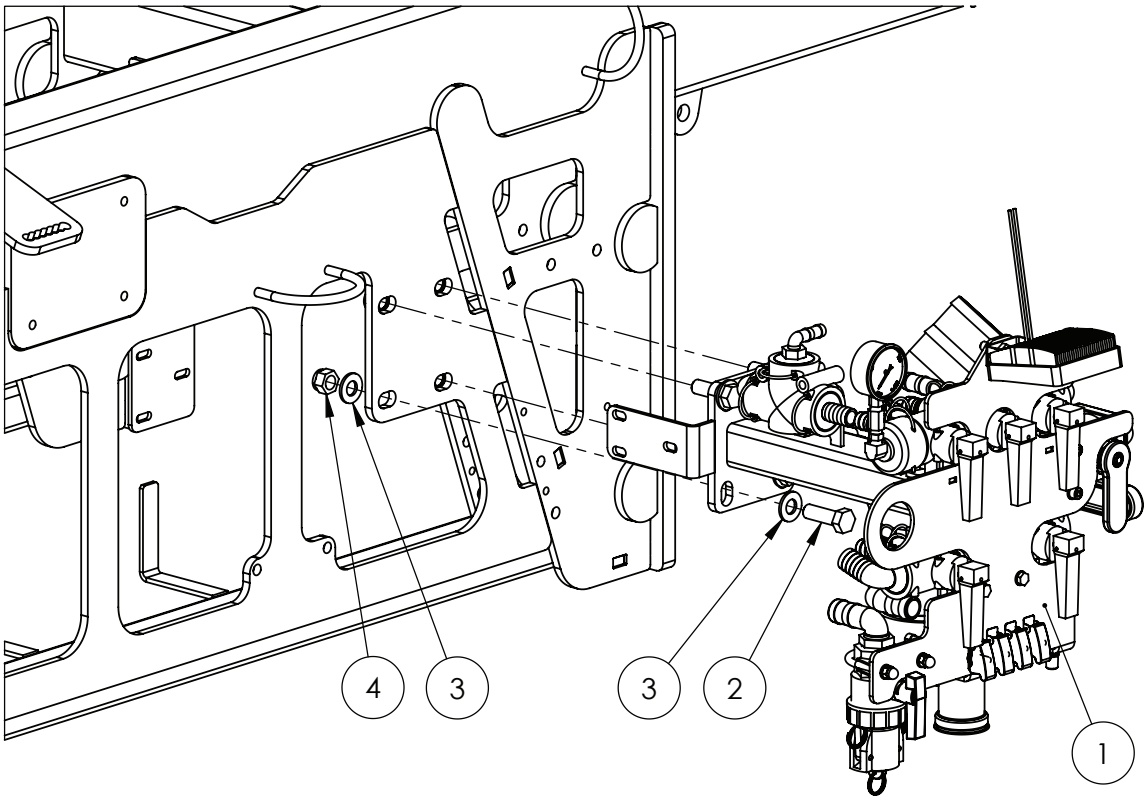

ITEM NO.	PART NUMBER	DESCRIPTION	QTY.
1	*	EZ Control Station Assembly	1
2	GA5000931	Bolt M16 x 50 GR8.8 ZP	4
3	GA5001043	Washer 16mm Flat SS HD	8
4	GA5001029	Nut M16 Nyloc ZP	4

* Sub-assembly on following pages

EZ Control Station - Assembly

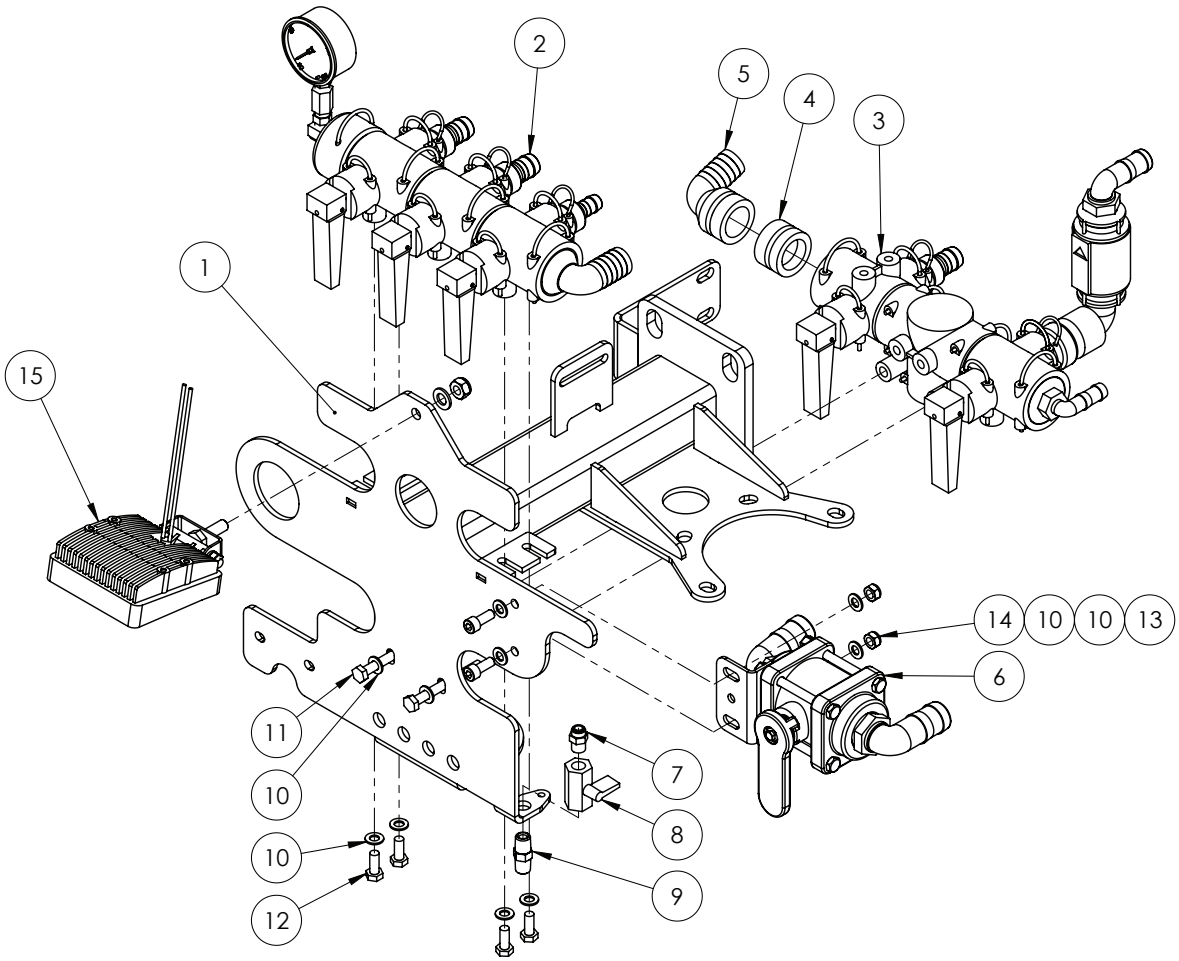

ITEM NO.	PART NUMBER	DESCRIPTION	QTY.
1	GA4600795	Plumbing Control Pod Frame	1
2	*	Agitator Control - Venturi	1
3	*	Rinse Control - Fresh Water Fill	1
4	GA5065680	Plug, AS40 male	1
5	GA5065615	Hose barb, Elbow 90 degree, AS40 x 25mm	2
6	*	Bypass Tap	1
7	GA5045140	Pneumatic fitting, Nipple, 1/4" BSPT male x 6mm push type, Brass	1
8	GA5018321	Valve, Ball, 1/4" female, Black Lever handle, Chromed	1
9	GA3500218	Hydraulic adaptor, Nipple, 1/4" BSPT male x 1/4" BSPT male	1
10	GA5003643	Washer 8mm Flat SS HD	8
11	GA5004749	Bolt M8 x 80 GR8.8 ZP	2
12	GA5004085	Bolt M8 x 20 GR8.8 ZP	2
13	GA5004707	SHCS M8 x 20 GR12.9 ZP	2
14	GA5052590	Nut M8 Nyloc SS	2
15	GA5075500	Light, LED, Work, Flood beam, bare wires, 12v, 24W -inc. nut & bolt	1

* Sub-assembly on following pages

EZ Control Station - Hopper Tee

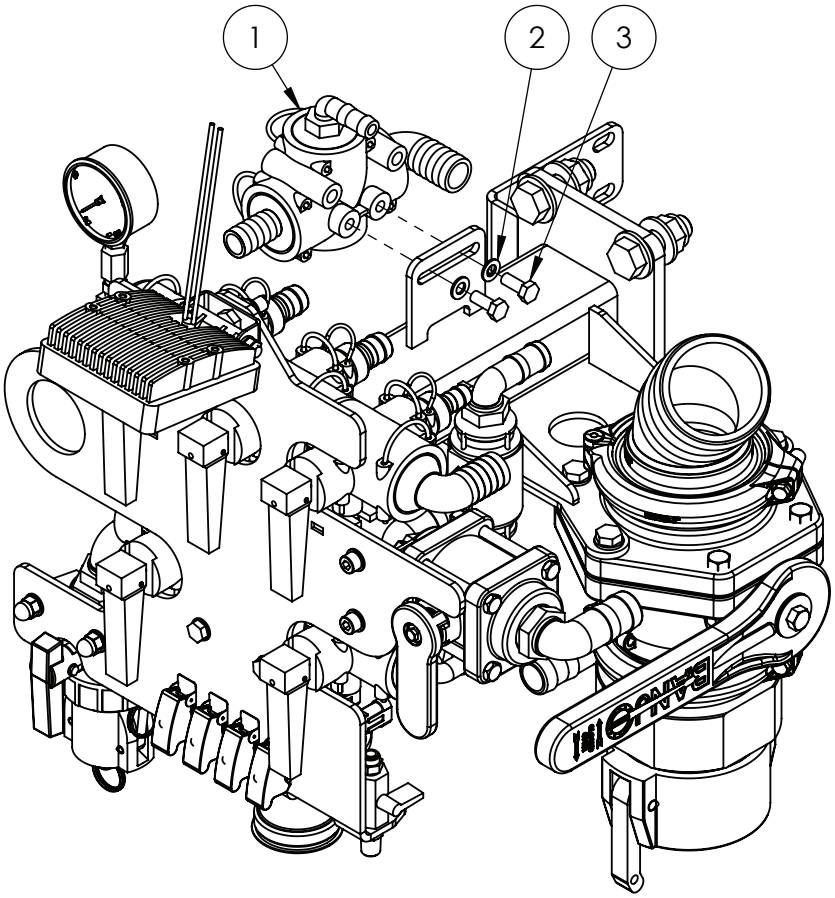

ITEM NO.	PART NUMBER	DESCRIPTION	QTY.
1	*	Hopper Tee Assembly	1
2	GA5003643	Washer 8mm Flat SS HD	2
3	GA5004085	Bolt M8 x 20 GR8.8 ZP	2

* Sub-assembly on following pages

EZ Control Station - 3" Fill Point

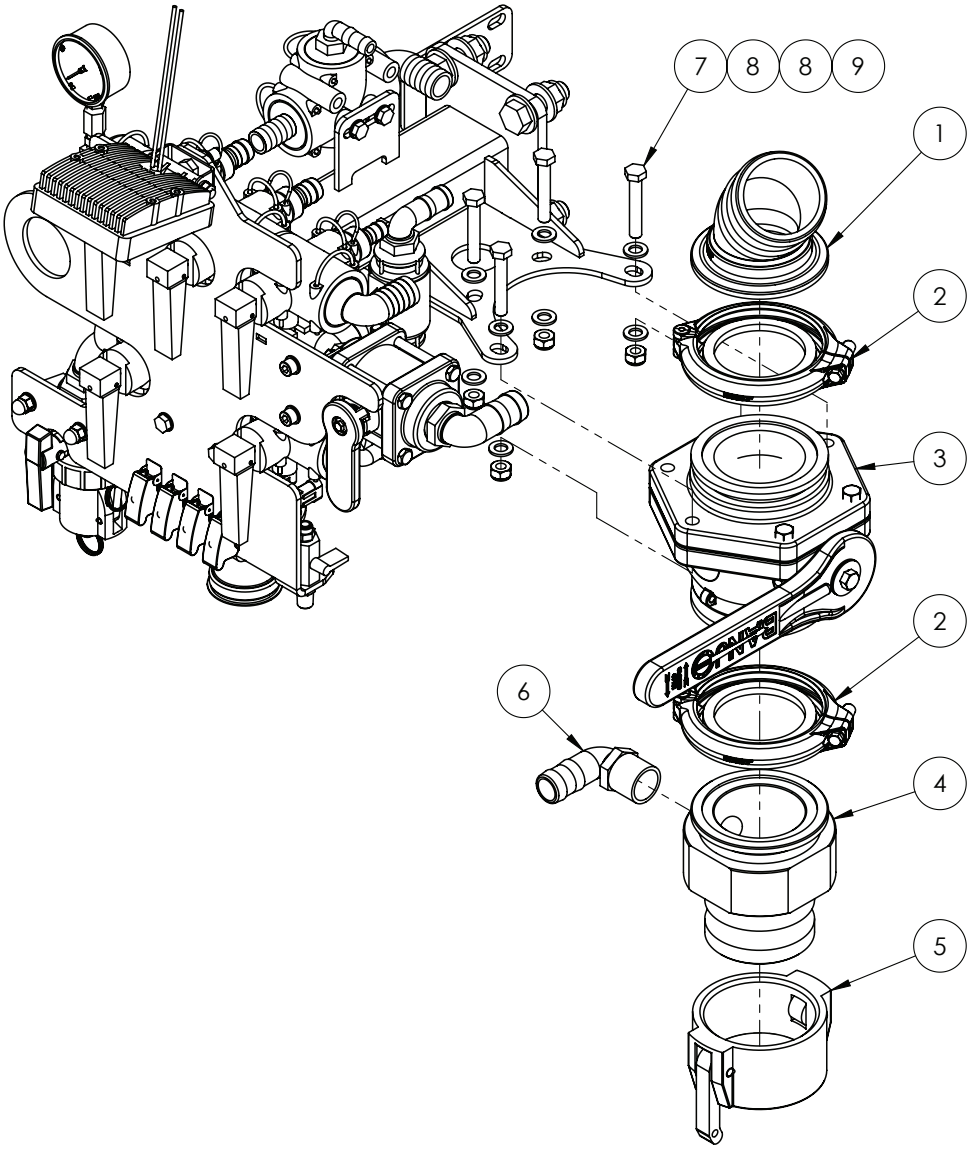

ITEM NO.	PART NUMBER	DESCRIPTION	QTY.
1	GA5077874	3” Manifold Hose Barb x 45 Degree	1
2	GA2000116	Flange Clamp, and Gasket, 3”	2
3	GA2000119	Valve, Ball, 3” Manifold Flange Both Ends, Stubby	1
4	GA4550630	3” Cam Lock Inlet, Plumbing Pod	1
5	GA5076719	Cam lever, Female cap, 3”	1
6	GA5077723	Hose barb, Elbow, 90 degree, 1” male x 1” hose	2
7	GA5065455	Bolt M10 x 30 GR8.8 ZP	5
8	GA5000117	Washer 10mm Flat SS HD	9
9	GA5000141	Nut M10 Nyloc ZP	5

3” Front Fill, Inlet ASsembly

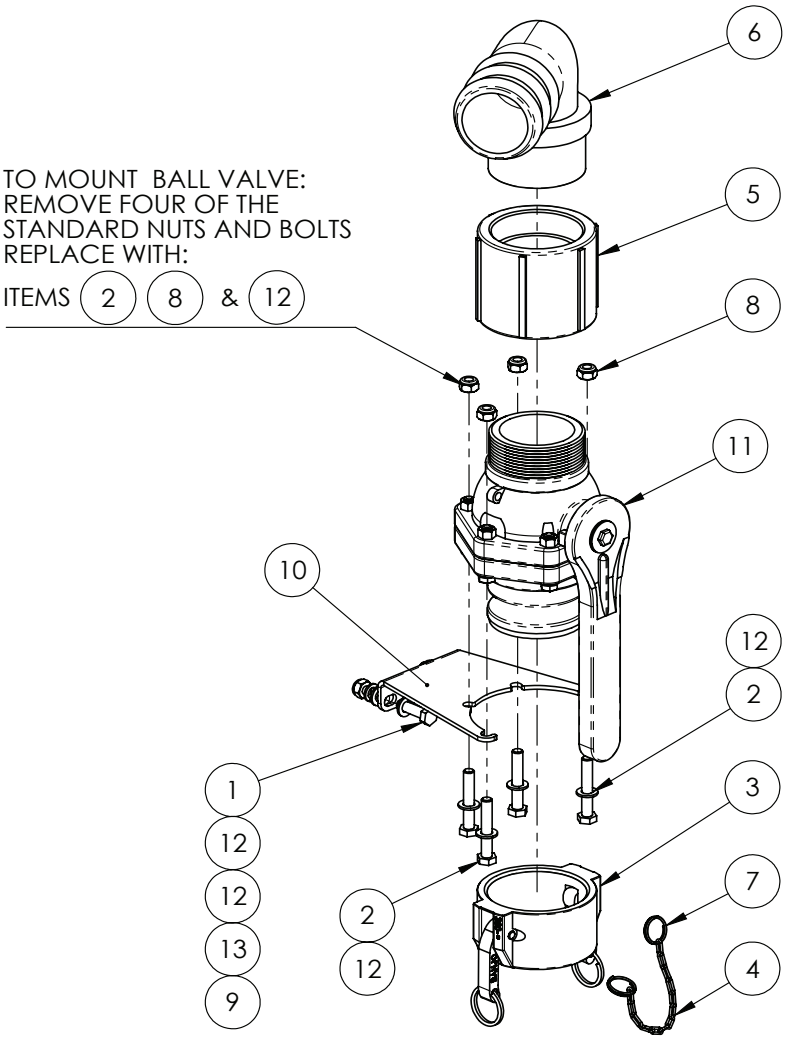

ITEM NO.	PART NUMBER	DESCRIPTION	QTY.
1	GA5006111	Bolt M10 x 35 GR8.8 ZP	2
2	GA5011175	Bolt M10 x 60 GR8.8 ZP	4
3	GA5076719	Cam lever, Female cap, 3”, Banjo, 300CAP	1
4	GA5001491	Chain 2 x 20 mm SS 316, 146102	0.15
5	GA5077642	Coupling, socket, 3” female thread, Banjo, CPLG300	1
6	GA5077742	Hose barb, Elbow, 90 degree, 3 male thread x 3 hose, Banjo, HB300-90	1
7	GA5002077	Key ring, 25mm, SS	2
8	GA5051445	Nut M10 Nyloc SS	4
9	GA5000141	Nut M10 Nyloc ZP	2
10	GA4509400	Plate, Ball Valve Mount 3”, Banjo	1
11	GA5078204	Valve, Ball, 3”, Male NPT, Male Cam lock, stubbly, long handle, Banjo, VSFMT300	1
12	GA5000117	Washer M10 Flat SS HD	8
13	GA5000137	Washer 10mm Spring SS	2

EZ Control Station - Chemical Probe

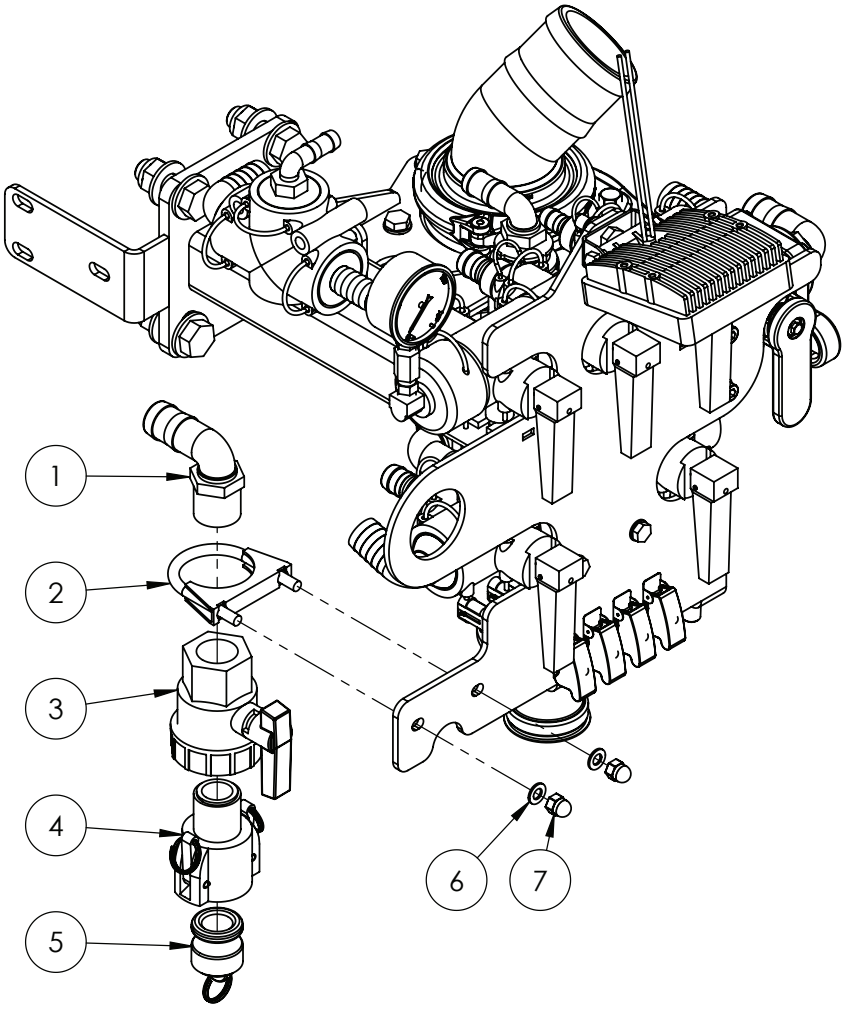

ITEM NO.	PART NUMBER	DESCRIPTION	QTY.
1	GA5077723	Hose barb, Elbow, 90 degree, 1” male x 1” hose	1
2	GA5006705	Clamp, 2"	1
3	GA5078164	Valve, Ball, 1” female thread inlet / outlet, Full port, Lever handle	1
4	GA5076007	Cam lever, 1" female coupler, 1" male thread	1
5	GA5076005	Cam lever, Male plug, Suits 1" & 1 1/4" couplings	1
6	GA5003643	Washer 8mm Flat SS HD	2
7	GA5011457	Nut M8 Dome Nut SS	2

EZ Control Station - Micromatic Rinse

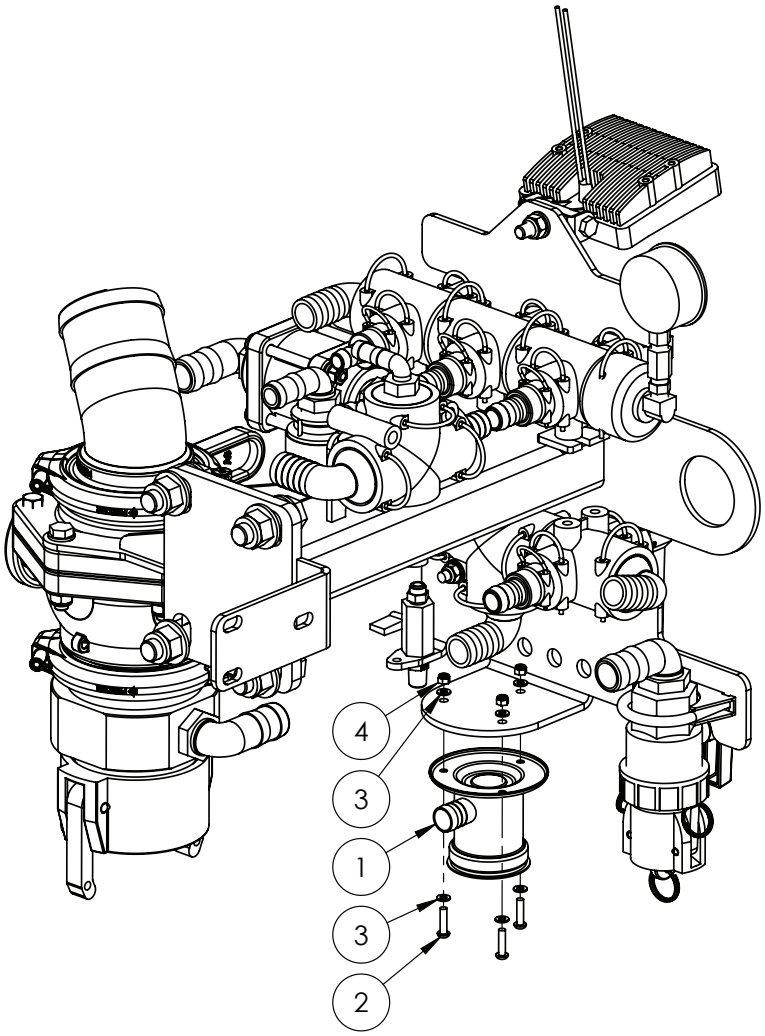

ITEM NO.	PART NUMBER	DESCRIPTION	QTY.
1	GA5018800	Rinsing socket, 3 pin, Micromatic / Enviro drum coupling	1
2	GA0500004	BHCS M5 x 20 SS A2-70	3
3	GA5003983	Washer 5mm Flat SS	6
4	GA5003975	Nut M5 Nyloc SS	3

EZ Control Station - Switches

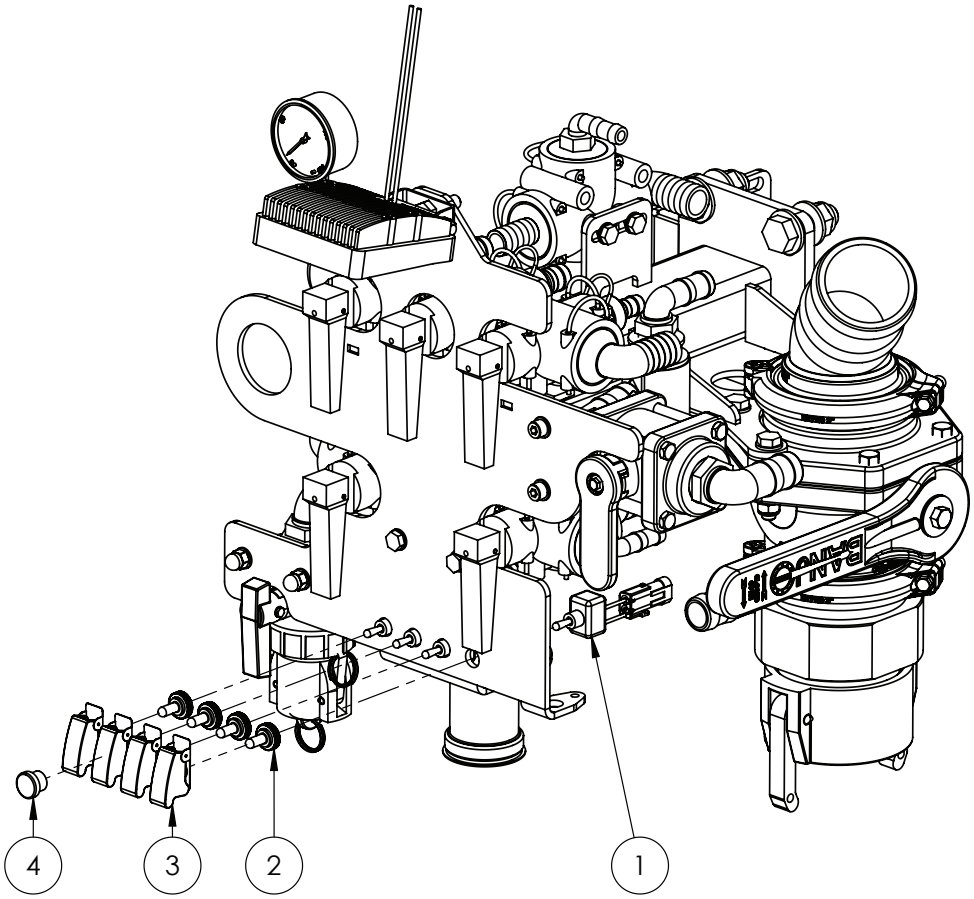

ITEM NO.	PART NUMBER	DESCRIPTION	QTY.
1	GA5060064	Switch, Fill Pump, Pre Assembled Loom with connector	4
2	GA5012175	Cover, Toggle switch, Waterproof	4
3	GA5016753	Toggle switch cover	4
4	GA5052910	Insert, suit 16 mm Hole	1

Agitator Control - Venturi

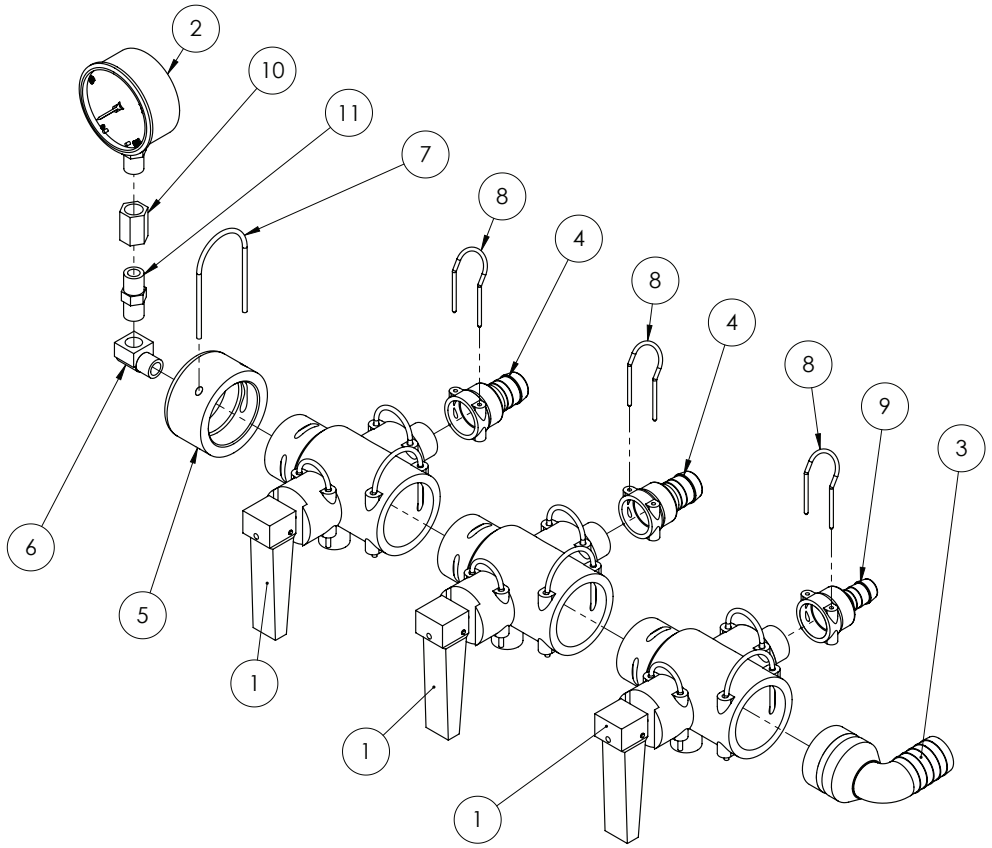

ITEM NO.	PART NUMBER	DESCRIPTION	QTY.
1	GA5065545*	Quick Fit Valve 2 Way Assembly	3
2	GA4948470	Gauge, Pressure, Small face, 160psi	1
3	GA5065615	Hose barb, Elbow 90 degree, AS40 x 25mm, Altek	1
4	GA5065640	Hose barb, AS24 female x 20mm hose	2
5	GA4582400	Cap Altek AS40 with 1/4” BSPP Female Thread (Delron)	1
6	GA5048305	Elbow, 90 degree, 1/4” BSP male x 1/4” BSP female, Brass	1
7	GA5065690	Safety pin, Suit AS40 plumbing fittings, Altek	1
8	GA5065695	Safety pin AS24	3
9	GA5065745	Hose barb, Straight, AS24 female x 15mm hose, Altek	1
10	GA5066940	Socket, 1/4” female thread, Hex, Brass	1
11	GA5050285	Nipple, 1/4” male thread x 1/4” male thread, Brass	1

* Sub-assembly on following pages

Agitator Control - Venturi - no Hopper

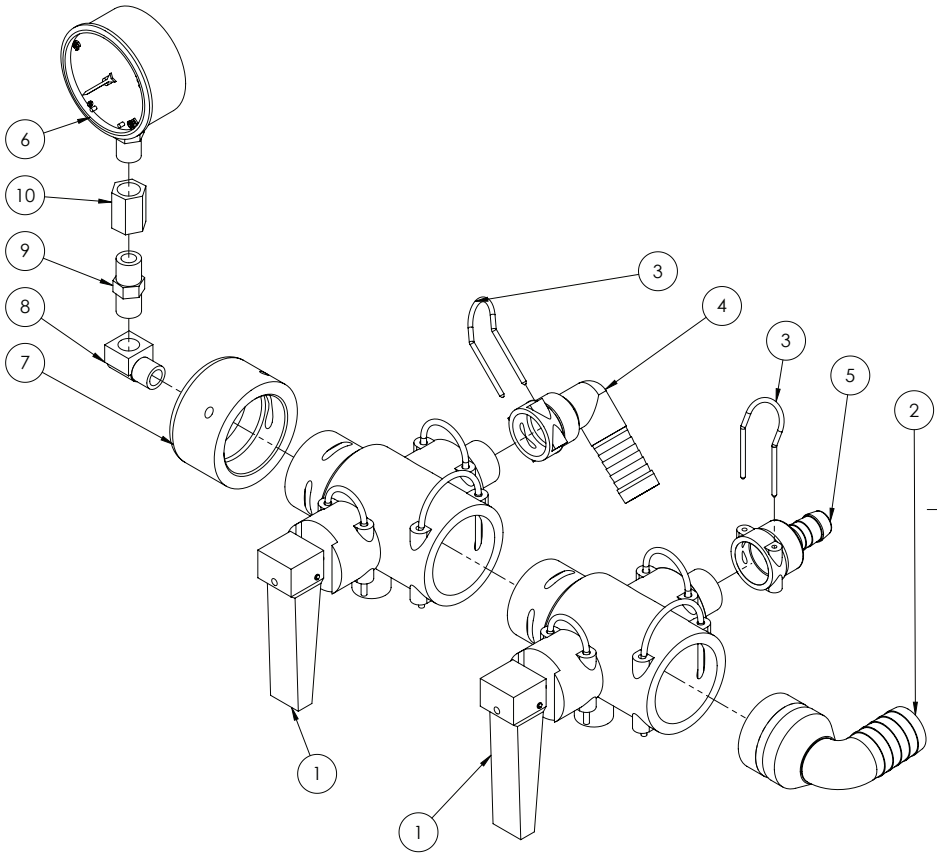

ITEM NO.	PART NUMBER	DESCRIPTION	QTY.
1	GA5065545*	Quick Fit Valve 2 Way Assembly	2
2	GA5065615	Hose barb, Elbow 90 degree, AS40 x 25mm, Altek	1
3	GA5065695	Safety pin AS24	2
4	GA5065675	Hose barb, Elbow, 90 degree, AS24 female x 20mm hose, Altek	1
5	GA5065745	Hose barb, Straight, AS24 female x 15mm hose, Altek	1
6	GA4948470	Gauge, Pressure, Small face, 160psi	1
7	GA4582400	Cap Altek AS40 with 1/4” BSPP Female Thread (Delron)	1
8	GA5048305	Elbow, 90 degree, 1/4” BSP male x 1/4” BSP female, Brass	1
9	GA5050285	Nipple, 1/4” male thread x 1/4” male thread, Brass	1
10	GA5066940	Socket, 1/4” female thread, Hex, Brass	1

* Sub-assembly on following pages

Rinse Control - Fresh Water Fill

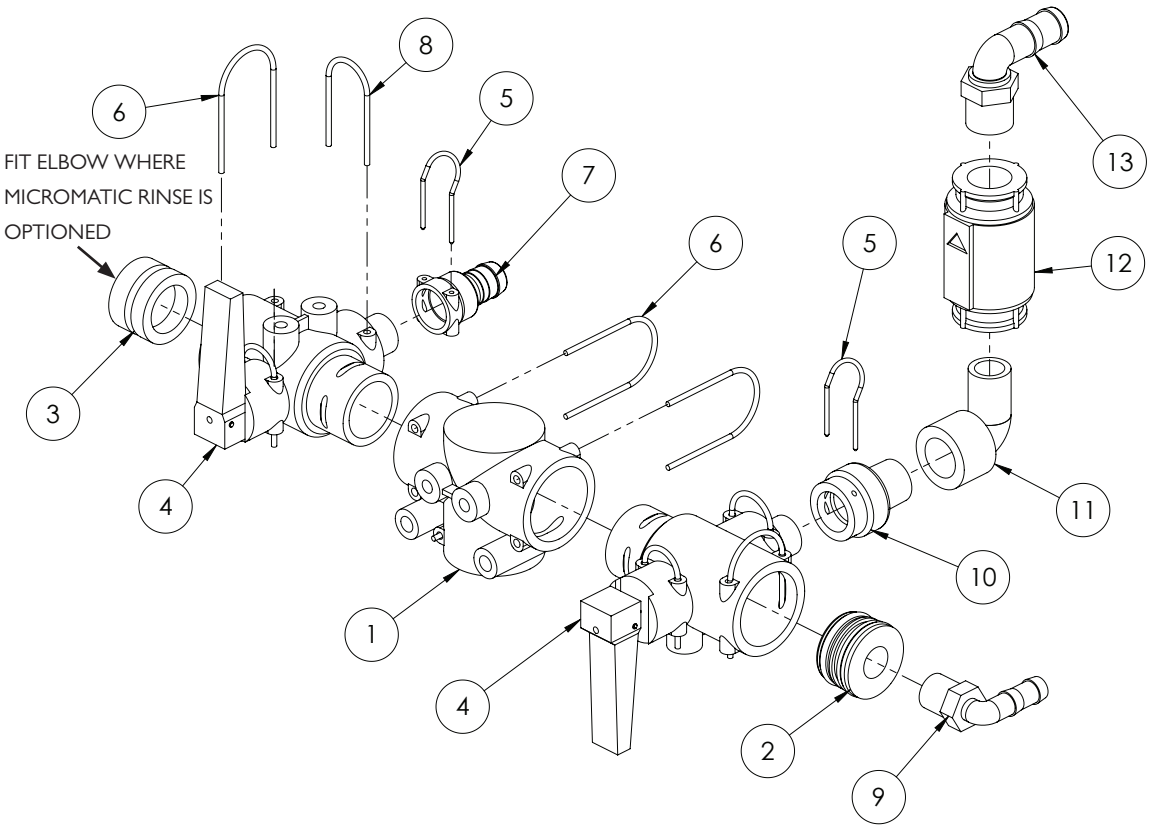

ITEM NO.	PART NUMBER	DESCRIPTION	QTY.
1	GA5065560	Tee, AS40 female, M8 inserts, Altek	1
2	GA4582345	Dummy plug AS40 G1/2" female (45mm Delron)	1
3	GA5065680	Blind cap Plug AS40	1
	GA5065610	Hose barb, Elbow, 90 degree, AS40 x 20mm hose, Altek	1
4	GA5065545*	Quick Fit Valve 2 Way Assembly	2
5	GA5065695	Safety pin AS24	1
6	GA5065690	Safety pin AS40	5
7	GA5065640	Hose barb, AS24 female x 20mm hose	1
8	GA5065701	Safety pin suit AS30	2
9	GA5077708	Hose barb, Straight, 1/2" male thread x 1/2" hose, Banjo	1
10	GA4582415	Plumbing adaptor, AS24 female x 3/4" BSPT male, Delrin	1
11	GA5078135	Street elbow, 90 degree, 3/4" female thread x 3/4" male thread	1
12	GA5002473	Valve non-return 3/4"	1
13	GA5077717	Hose barb, Elbow, 90 degree, 3/4" male thread x 3/4" hose, Banjo	1

* Sub-assembly on following pages

Rinse Control - Fresh Water Fill - no Hopper

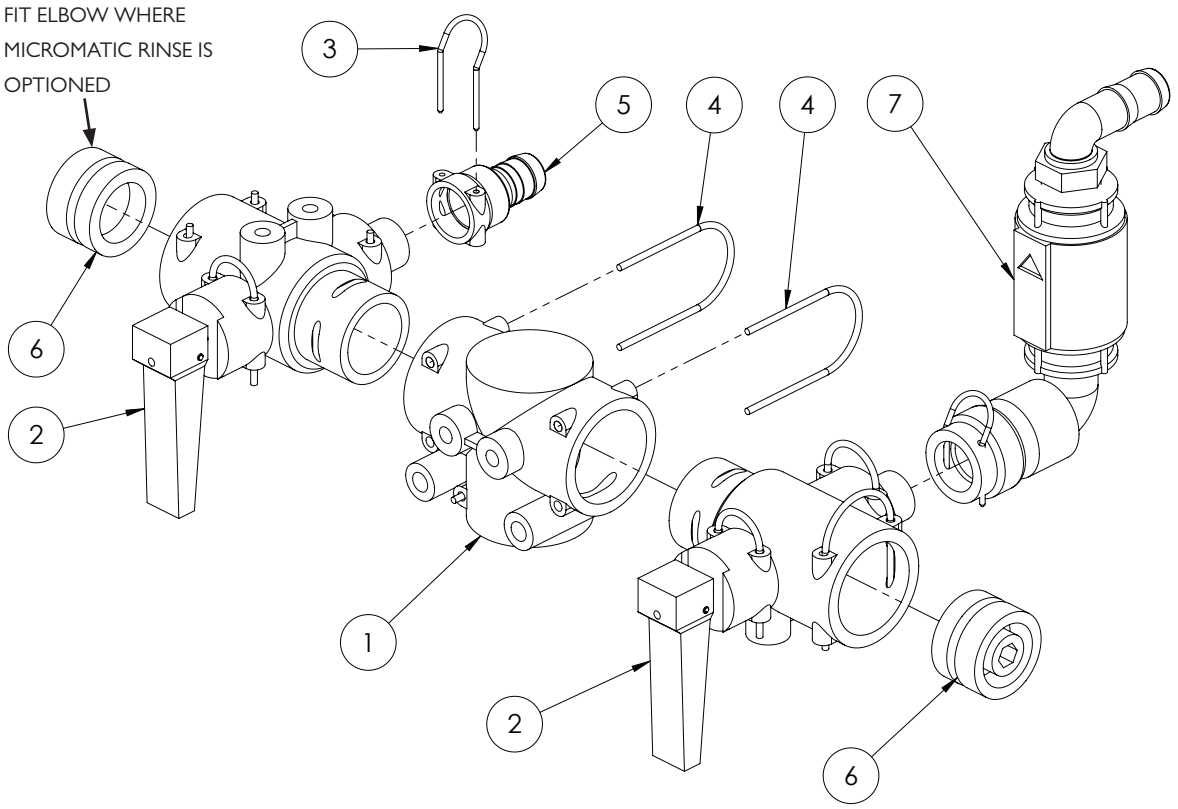

ITEM NO.	PART NUMBER	DESCRIPTION	QTY.
1	GA5065560	Tee, AS40 female, M8 inserts, Altek	1
2	GA5065545*	Quick Fit Valve 2 Way Assembly	2
3	GA5065695	Safety pin AS24	1
4	GA5065690	Safety pin, Suit AS40 plumbing fittings, Altek	4
5	GA5065640	Hose barb, AS24 female x 20mm hose	1
6	GA5065680	Plug, AS40 male, Altek	2
	GA5065610	Hose barb, Elbow, 90 degree, AS40 x 20mm hose, Altek	1
7	GA4903148-19	Pod LH Sub Assembly Non Return Valve Fresh water	1

* Sub-assembly on following pages

Hopper Tee Assembly

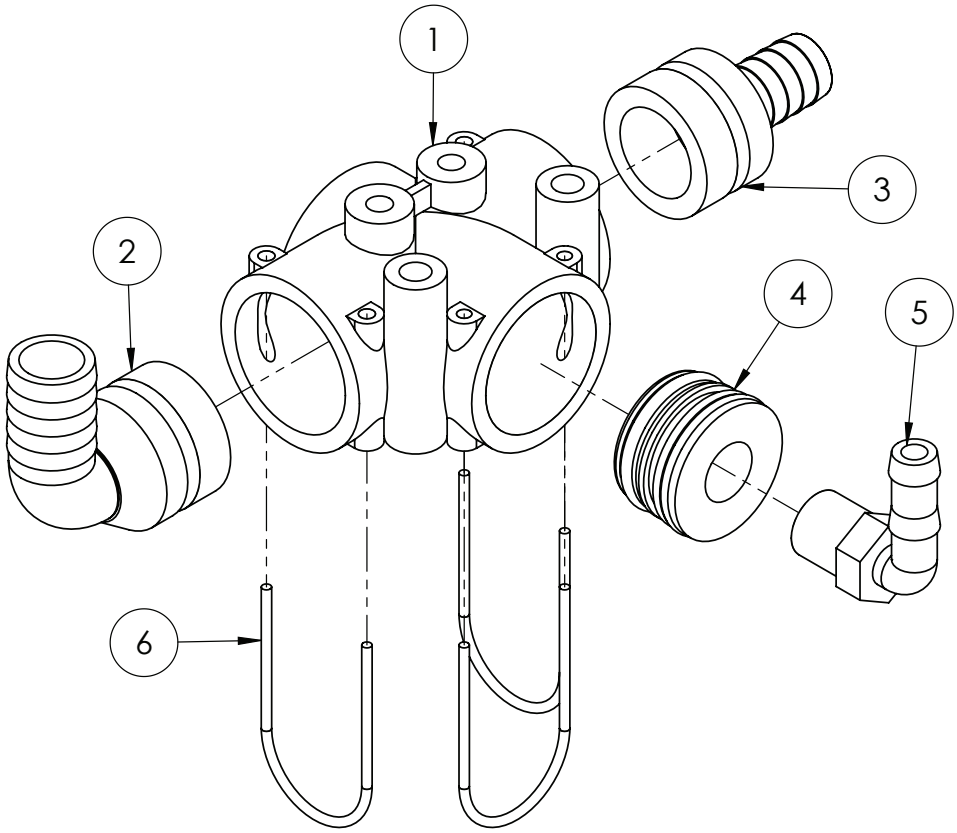

ITEM NO.	PART NUMBER	DESCRIPTION	QTY.
1	GA5065560	Tee, AS40 female, M8 inserts, Altek	1
2	GA5065615	Hose barb, Elbow 90 degree, AS40 x 25mm, Altek	1
3	GA5065575	Hose barb, Straight, AS40 male x 20mm hose, Altek	1
4	GA4582345	Dummy plug AS40 G1/2” female (45mm Delron)	1
5	GA5077708	Hose barb, Elbow, 90 degree, 1/2” male thread x 1/2” hose, Banjo	1
6	GA5065690	Safety pin, Suit AS40 plumbing fittings, Altek	3

Valve - Quick Fit 2 Way Assembly

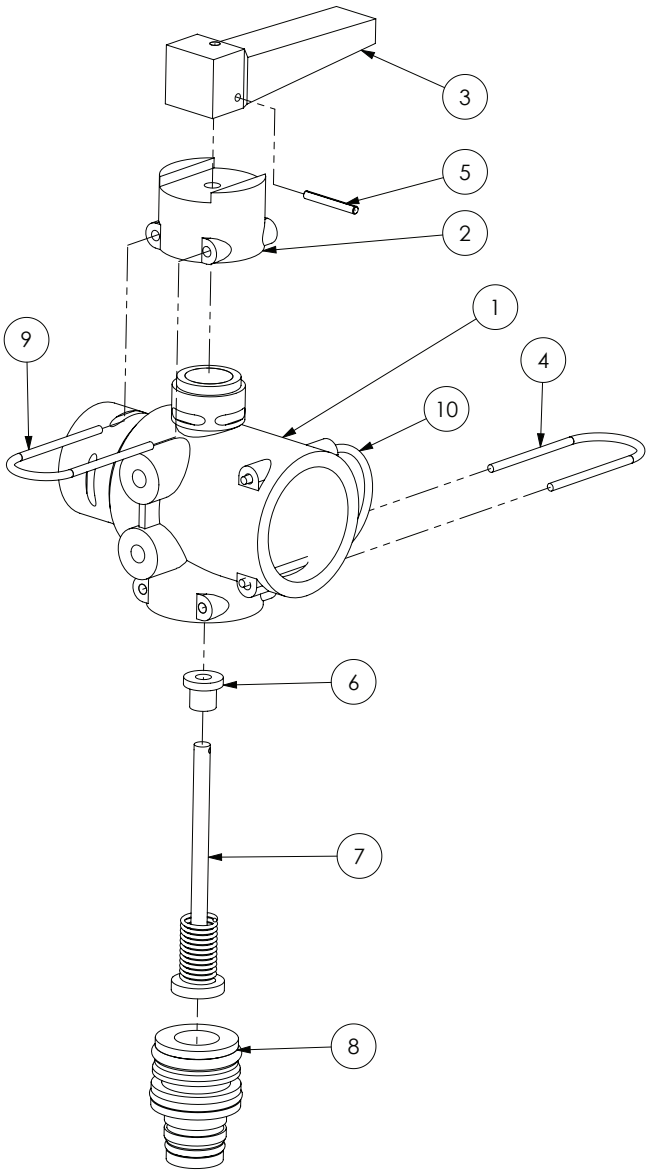

ITEM NO.	PART NUMBER	DESCRIPTION	QTY.
-	GA5065545	Valve, Quick fit flip top, 2 way, AS40 male x AS24 female x AS40 female, Altek	-
1	GA5073750	Body	1
2	GA5073755	Slide cap	1
3	GA5073760	Red lever	1
4	GA5065701	Retaining pin, Suit AS30 plumbing fittings	1
5	GA5073765	Handle retaining pin	1
6	GA5073770	Spring guide	1
7	GA5073775	Switch rod	1
8	GA5065835	Plug in adapter, AS30 x AS24	1
9	GA5073780	Retaining pin, 4 x 26 mm	1
10	GA5065690	Retaining pin, Suit AS40 plumbing fittings	1

Bypass Valve Assembly

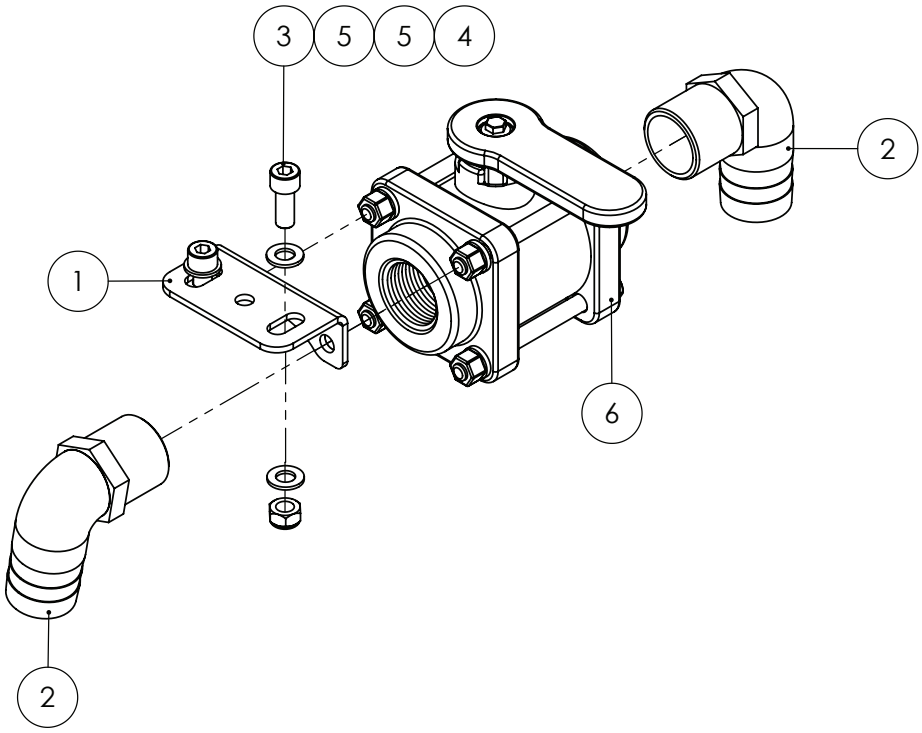

ITEM NO.	PART NUMBER	DESCRIPTION	QTY.
1	GA4502210	Mounting plate, to suit ball valve	1
2	GA5077720	Hose barb, Elbow, 90 degree, 1" male thread x 1 1/4" hose	2
3	GA5004707	SHCS M8 x 20 GR12.9 ZP	2
4	GA5052590	Nut M8 Nyloc SS	2
5	GA5003643	Washer 8mm Flat SS HD	4
6	GA5078178	1" FPT x 1" Port Poly Valve, V100FP	1

Chapter 6

DCI

Not Fitted

Chapter 7

DUAL PRODUCT

Not Fitted

Chapter 8

INDUCTION HOPPER

Hopper Tank & Frame

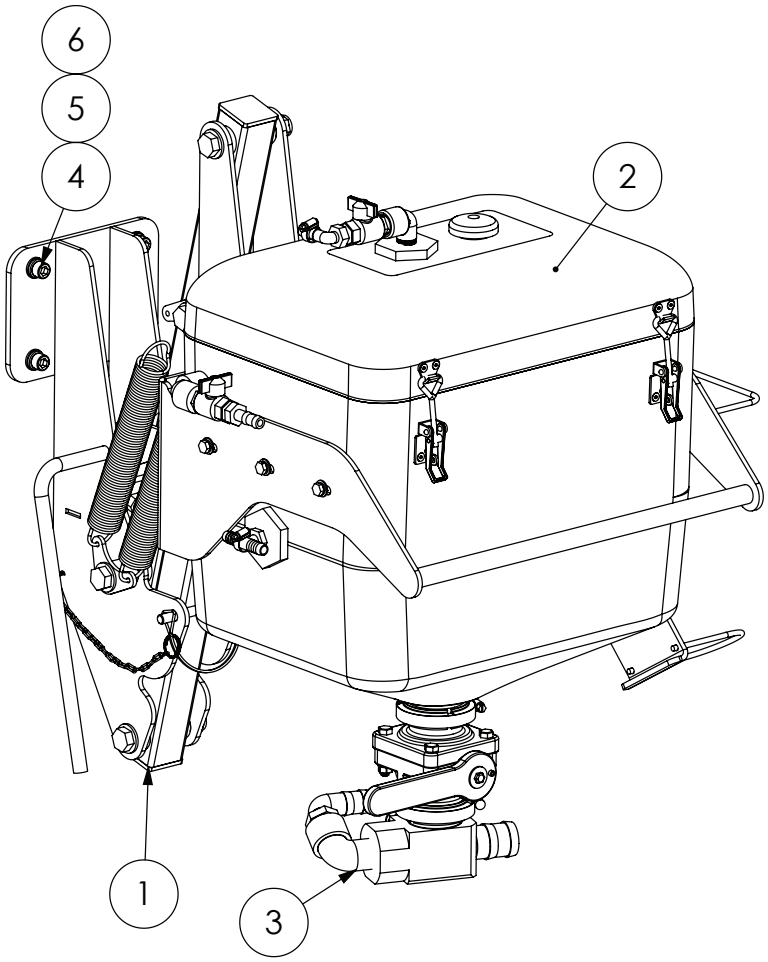

ITEM NO.	PART NUMBER	DESCRIPTION	QTY.
-	GA4524985	Plate, Hopper Mount Adaptor, Offset, Self Propelled (optional)	-
1	*	Frame, Induction hopper, Pre-assembled, Suit self propelled	1
2	*	Hopper, Pre-assembled 60L with Flange (rectangle) Hopper Tank	1
3	*	Hopper Bottom 2” Flanged	1
4	GA5000577	Washer 12mm Flat SS HD	4
5	GA5000575	Washer 12mm Spring SS	4
6	GA5000297	SHCS M12 x 25 ZP GR12.9	4

* Sub-assembly on following pages

Hopper Tank

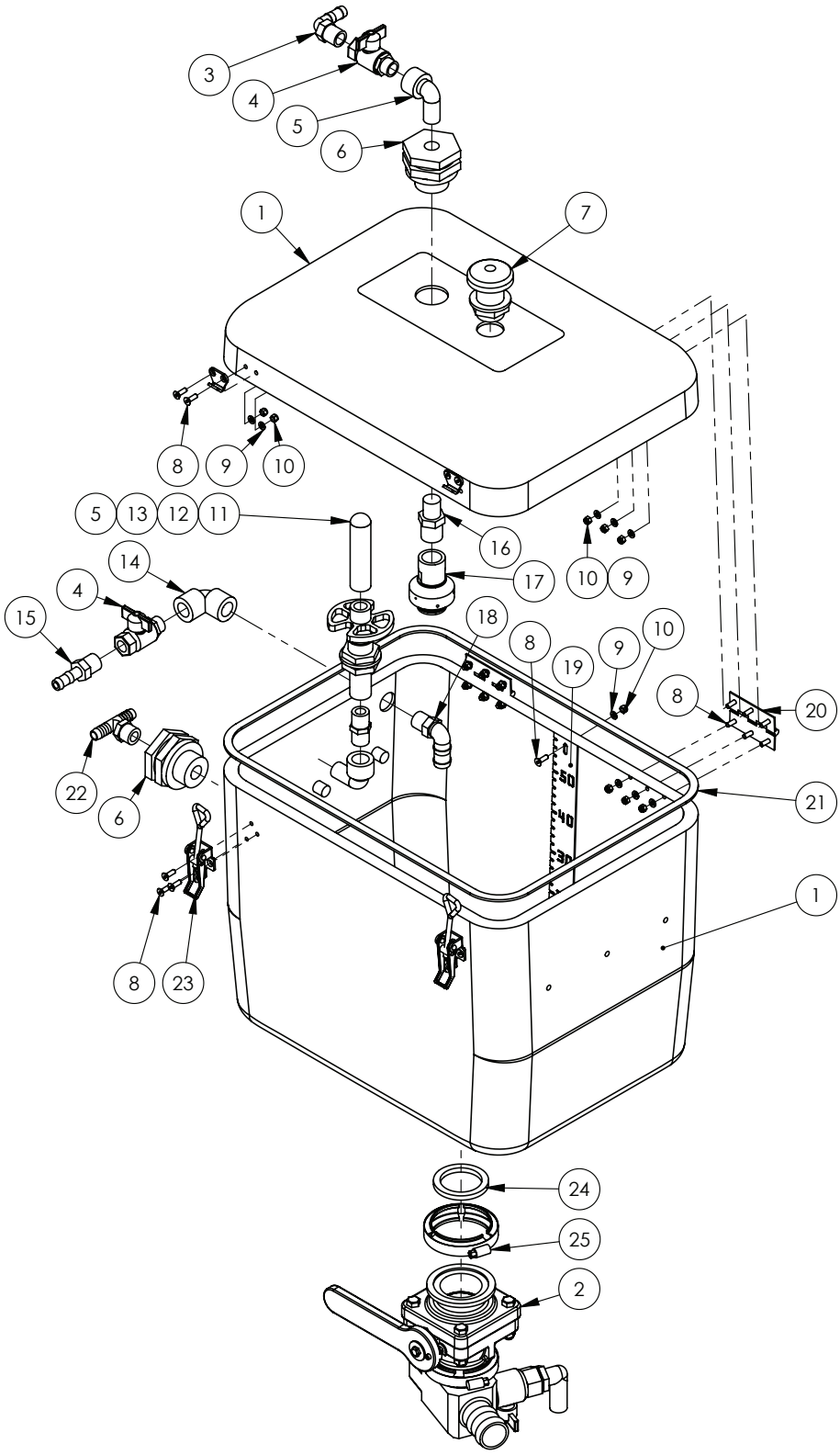

Continued over page

Hopper Tank

ITEM NO.	PART NUMBER	DESCRIPTION	QTY.
1	GA5071208	Tank, Induction Hopper, 60L with Flange, includes lid	1
2	*	Pre-assembled 60L Hopper Bottom 2” Flanged	1
3	GA5077708	Hose barb, Elbow, 90 degree, 1/2” male thread x 1/2” hose	1
4	GA5020615	Valve, Ball, 12mm, 1/2” Male, Female Butterfly, Brass	2
5	GA5078133	Street elbow, 90 degree, 1/2” female thread x 1/2” male thread	2
6	GA5078156	Tank flange, 1/2” female threads	2
7	GA5077045	Breather valve, Labyrinth type, 1” male thread	1
8	GA5051230	CSCS M5 x 16 SS A2-70	23
9	GA5003983	Washer 5mm Flat SS	23
10	GA5003975	Nut M5 Nyloc SS	23
11	GA5077063	Nozzle, Drum & container rinsing	1
12	GA5077062	Valve, Drum & container rinsing nozzle	1
13	GA5077911	Nipple, Short, 1/2” male thread x 1/2” male thread	1
14	GA5077652	Street elbow, 90 degree, 1/2” female thread	1
15	GA5077702	Hose barb, Straight, 1/2” male thread x 1/2” hose	1
16	RN075050	Reducing nipple, 3/4” male thread x 1/2” male thread	1
17	GA5077336	Nozzle, Tank rinsing, 3/4” BSPT female inlet	1
18	GA5077704	Hose barb, Elbow, 90 degree, 1/2” male thread x 3/4” hose	1
19	GA4522296	Level indicator, 60L induction hopper	1
20	GA5006661	Hinge, Butt, 70 long x 50 wide x 1.5, SS	2
21	GA5016473	Tape PM foam 6.4 x 18 L/Density	1
22	GA3500391	Tee, Threaded, 1/2” male x 1/2” hose, T12T	1
23	GA5007071	Latch, Adjustable, Induction Hopper Lid	2
24	GA5076615	Seal, EPDM, Suit 2” flange fitting	1
25	FC220	2” Full Port Worm Screw Clamp	1

* Sub-assembly on following pages

Hopper Bottom - 2” Flanged

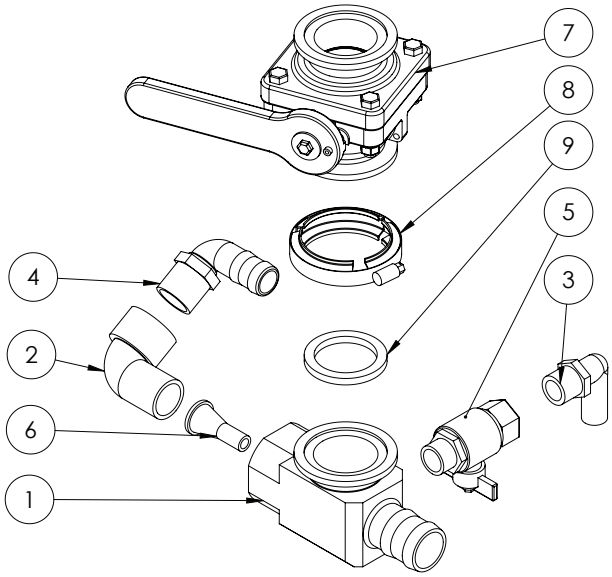

ITEM NO.	PART NUMBER	DESCRIPTION	QTY.
1	GA4552240	Hopper Bottom Venturi Housing with 2" Flange MY14	1
2	GA5078137	Street elbow, 90 degree, 1” male x 1” female, Banjo	1
3	GA5077717	Hose barb, Elbow, 90 degree, 3/4” male thread x 3/4” hose, Banjo	1
4	GA5077723	Hose barb, Elbow, 90 degree, 1” male x 1” hose, Banjo	1
5	GA5018315	Valve, Ball, 20mm male & female thread, Black Butterfly handle	1
6	L057A	Venturi, 9mm outlet, Suit Induction Hopper	1
7	GA5077908	Ball valve, 2" Full port , 4 Bolt Flanged, short, Banjo	1
8	FC220	2" Full Port Worm Screw Clamp	1
9	GA5076615	Seal, EPDM, Suit 2" flange fitting, Banjo	1

Hopper Frame

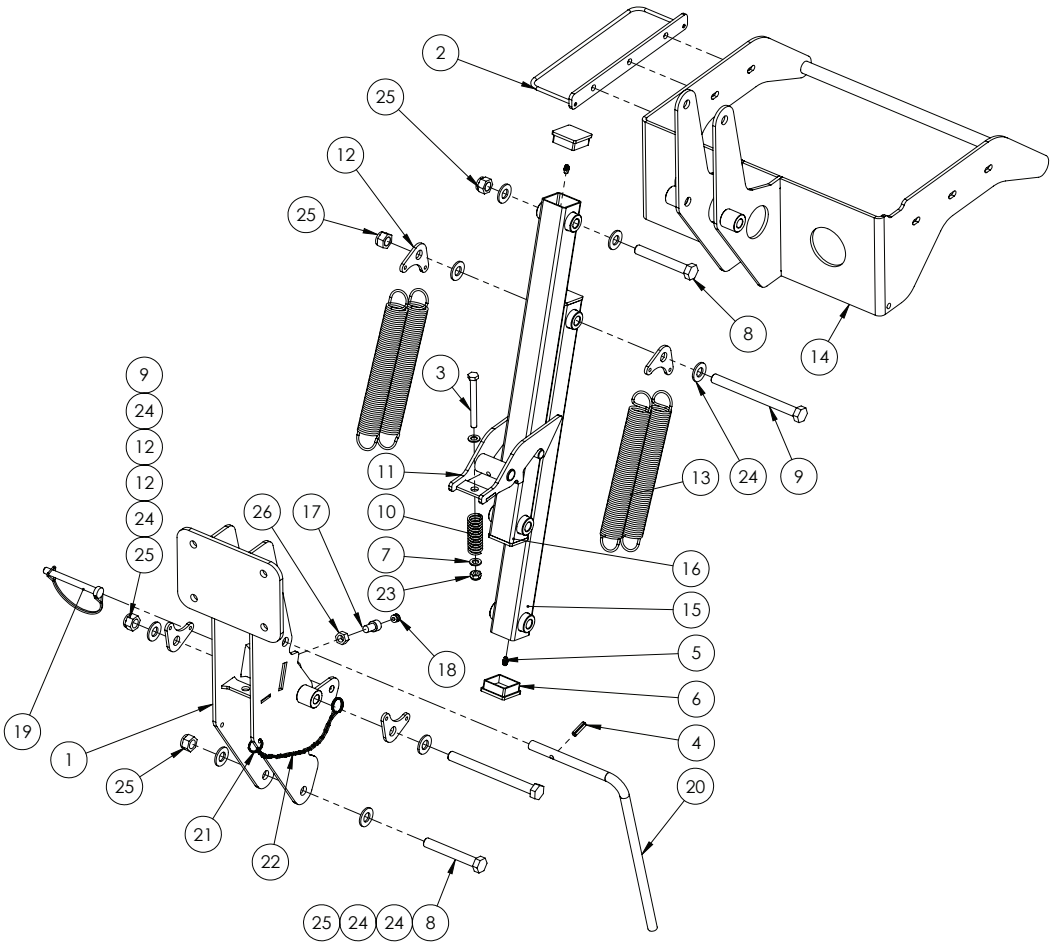

GA4903049-60CC	Frame, Induction hopper, Assembly

ITEM NO.	PART NUMBER	DESCRIPTION	QTY.
1	GA4657560	CCSP Hopper Mounting Assembly	1
2	GA4659155	Hose guide bracket	1
3	GA5006091	Bolt M10 x 100 GR8.8 ZP	1
4	GA5075130	Roll pin M8 x 30mm coated	1
5	GA5012203	Grease nipple, Short, 1/4" UNF	4
6	GA5003783	End cap, Plastic, Black, Insert, RHS. 50 x 50, 0.8 - 2.5mm wall	4
7	GA5000117	Washer 10mm Flat SS HD	2
8	GA5000855	Bolt M16 x 110 GR8.8 ZP	2
9	GA5000879	Bolt M16 x 180 GR8.8 ZP	2
10	GA5007329	Spring compression, 76.2mm x 25.4 x 3.15 mm, gold	1
11	GA4653490	Induction hopper latch	1
12	GA4522294	Mounting plate, Double spring	4
13	GA5007073	Spring, Tension, 38.2 OD x 284.3 long x 3.55mm	4
14	GA4656855	Induction hopper tank support 60L	1
15	GA4657570	CCSP Lower Hopper Arm	1
16	GA4657565	CCSP Upper Hopper Arm	1

Continued over page

Hopper Frame

ITEM NO.	PART NUMBER	DESCRIPTION	QTY.
17	GA5050330	SHCS M12 x 20 GR12.9 ZP	1
18	GA5052905	End cap, Plastic, Black, Insert, Round. 10mm, 0.8 - 1.5mm wall	1
19	GA5048380	Pin, 11mm OD shaft, Spring Steel wire loop lock, Yellow zinc	1
20	GA4699435	Handle, Induction Hopper Latch arm	1
21	GA5002077	Key ring, 25mm, SS	2
22	GA5001491	Chain 2 x 20 mm SS 316 - Cut to 600 mm	1
23	GA5000141	Nut M10 Nyloc ZP	1
24	GA5001043	Washer 16mm Flat SS HD	8
25	GA5001029	M16 Nyloc Nut	4
26	GA5000559	Nut M12 Hex ZP	1

Chapter 9

FOAM MARKER TANK

Not Fitted

Chapter 10

TRANSCAL

Not Fitted

Chapter 11

MAIN TANK

Tank Assembly - 4000L

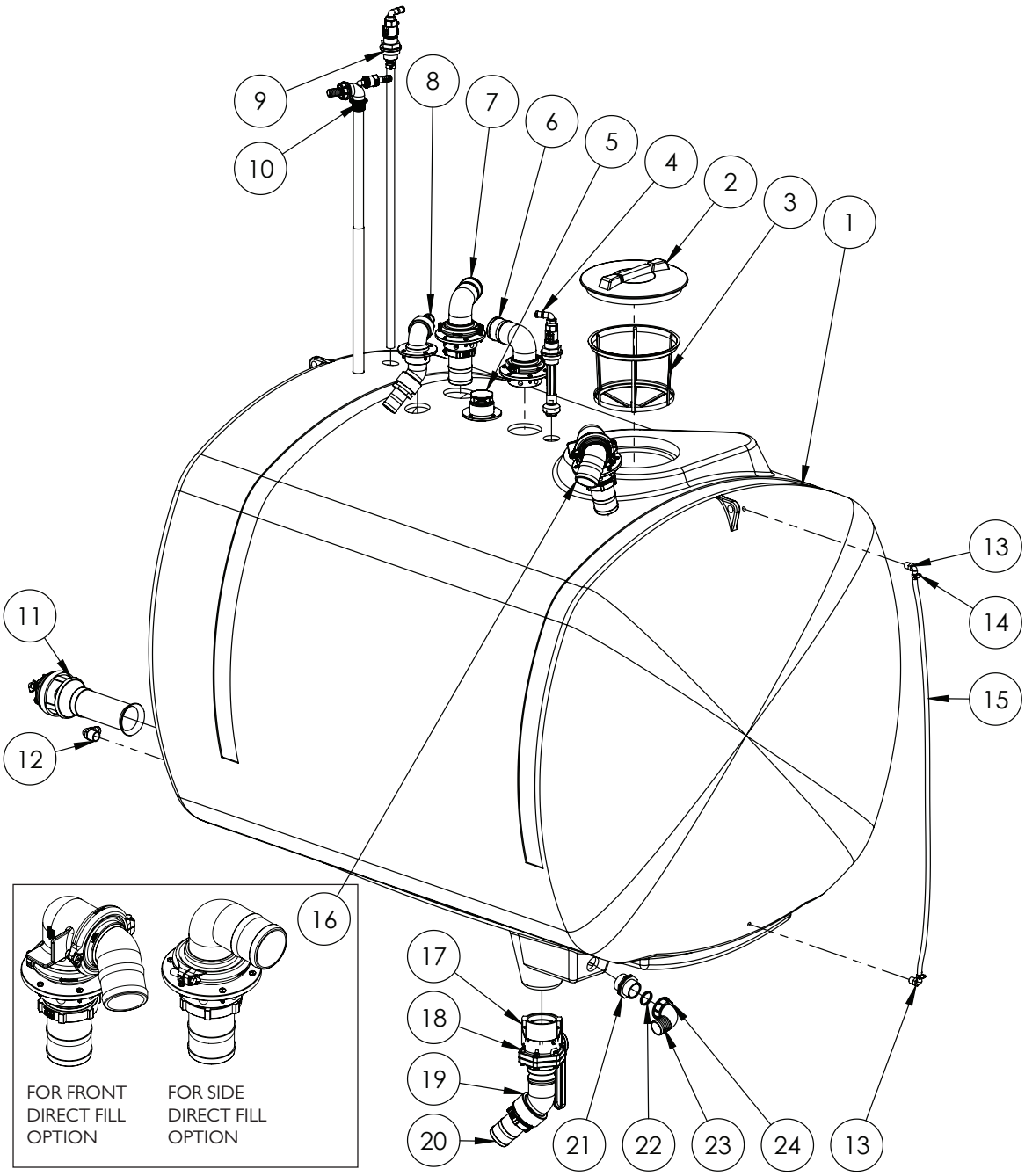

Continued over page

Tank Assembly - 4000L

ITEM NO.	PART NUMBER	DESCRIPTION	QTY.
1	GA5071165	Tank 4000L SP	1
2	GA5076880	Lid, Black, Without breather, Medium, Diameter 355 mm	1
3	GA5076714	Filter, Basket type, Diameter 305 x 245mm deep	1
4	*	Tank Rinsing Nozzle - Elbow Assembly	1
5	*	Tank Breather Assembly	1
6	*	Tank Overflow Outlet	1
7	*	Tank Fill - Inlet Assembly	1
8	*	Tank Fill - Hopper Inlet Assembly	1
9	*	Tank Fill - Boom Recirculation Assembly	1
10	*	Venturi Filler Assembly	1
11	*	Super mix agitator Assembly	1
12	GA5077723	Hose barb, Elbow, 90 degree, 1” male x 1” hose	1
13	GA5077708	Hose barb, Elbow, 90 degree, 1/2" male thread x 1/2" hose	2
14	GA5000469	Hose clamp, 1/2", SS, 12-20/9W3	2
15	GA2000209	Hose, Clear, 12mm, Sight tube	1
16	*	Tank Direct Fill 3" - Inlet Assembly - Side Mount	1
	*	Tank Direct Fill 3" - Inlet Assembly - Front Mount	1
17	GA5076720	Cam lever, 3" female coupling x 3" female thread, Banjo - NSPT thread	1
18	GA5078204	Valve, Ball, 3”, Male NPT, Male Cam lock, stubbly, long handle	1
19	GA5078143	Street elbow, 45 degree, 3" male x 3" female	1
20	GA5077741	Hose barb, Straight, 3" male thread x 3" hose	1
21	GA5078410	Plumbing fitting, Nipple, 2”	1
22	GA5076097	O ring, 42.52 x 2.62 mm	2
23	GA5076262	Hose barb, Elbow, 90 degree, 2” fly nut end x 52 mm hose	1
24	GA5076605	Fly nut, 2”, ARAG	1

* Sub-assembly on following pages

Tank Rinsing Nozzle, Elbow - Assembly

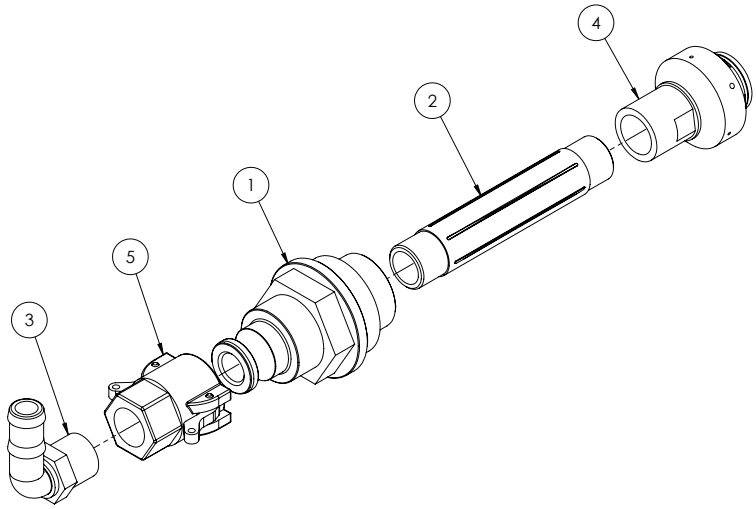

ITEM NO.	PART NUMBER	DESCRIPTION	QTY.
-	GA4901285-1	Tank rinsing nozzle, Elbow, Complete	-
1	GA4572015	Tank rinse adaptor with cam lock	1
2	GA5077912	Nipple, 6” long, 3/4” male thread, Banjo	1
3	GA5077717	Hose barb, Elbow, 90 degree, 3/4” male thread x 3/4” hose, Banjo	1
4	GA5077336	Nozzle, Tank rinsing, 3/4” BSPT female inlet, Teejet	1
5	GA5077132	Cam lever, 3/4” female coupling x 3/4” hose barb, Banjo	1

Inlet - Boom Recirculation - RapidFlow

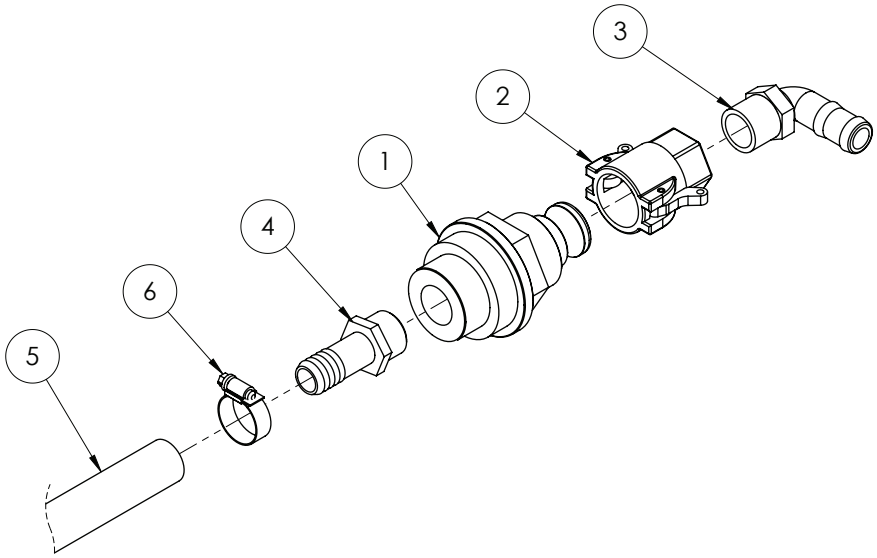

ITEM NO.	PART NUMBER	DESCRIPTION	QTY.
1	GA4572015	Tank rinse adaptor with cam lock	1
2	GA5077132	Cam lever, 3/4” female coupling x 3/4” female thread, Banjo	1
3	GA5077717	Hose barb, Elbow, 90 degree, 3/4” male thread x 3/4” hose, Banjo	1
4	GA5077709	Hose barb, Straight, 3/4” male thread x 3/4” hose, Banjo	1
5	GA2000216	Hose, Pressure, 20mm, Black 250psi	1.3
6	GA5000999	Hose Clamp, 3/4”, SS (16-27/12W)	1

Venturi Filler

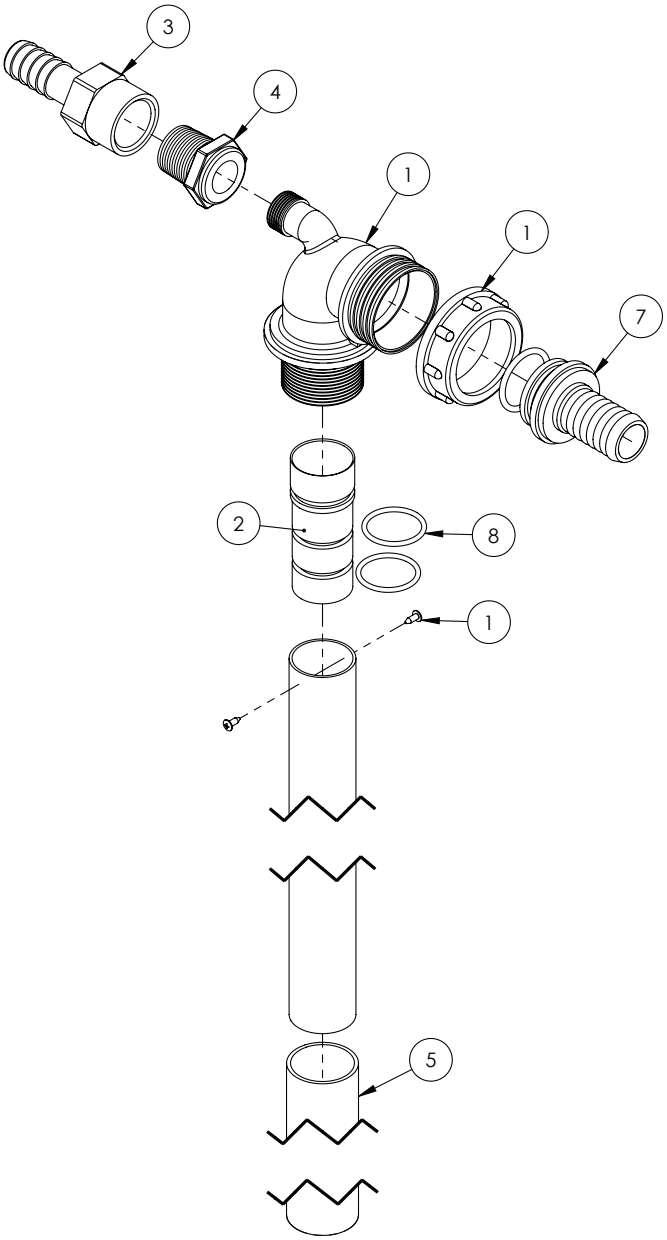

ITEM NO.	PART NUMBER	DESCRIPTION	QTY.
-	GA4903086	Venturi filler - Complete assembly	-
-	GA5007235	Hose clamp, Cobra type, 1 1/2”	1
1	GA5077035	Venturi, Top of tank, 32mm OD outlet	1
2	MACH0022	Jet for Arag venturi	1
3	GA5077743	Hose barb female 3/4"	1
4	GA5078010	Poly Pipe Reducer Bush 3/4” x 1/2”	1
5	GA5050205	Hose Lay flat Blue, 32mm - Cut 405mm long	1
6	GA5077679	O-ring 30 x 3mm	1
7	GA5076036	Hose barb, Straight, 1 1/2” fly nut end x 1” hose barb	1
8	GA5049125	O-ring, 23.4 x 3.53mm, BS213	2

NOTE: Not all parts supplied with kit 500232 are used in this assembly.

Supermix Agitator

NOTE: Sikaflex 227 used when installing supermix agitator.

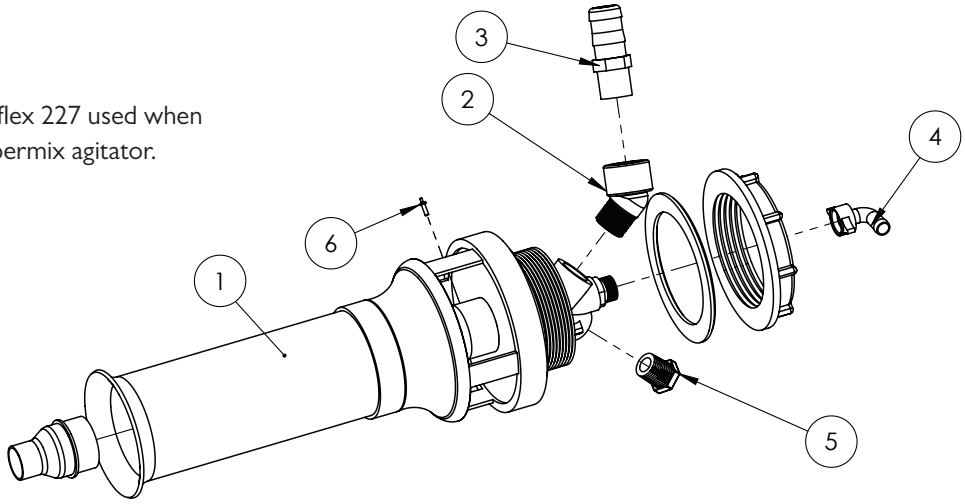

GA4905585 Super mix agitator, Pre assembled, Angled barb

ITEM NO.	PART NUMBER	DESCRIPTION	QTY.
1	GA5077038	Agitator, Super mix, 3mm jet, Arag	1
2	GA5078134	Street elbow, 45 degree, 3/4” male thread x 3/4” female thread	1
3	GA5077715	Hose barb, Straight, 3/4” male thread x 1” hose barb, Banjo	1
4	GA5075657	Hose barb, Elbow, 90 degree, 13mm hose, including 1/2” fly nut and seal, Brass, Arag	1
5	GA5077943	Plug, 1/2” male thread, Banjo	1
6	GA5078134	Pop Rivet 1/8" x 1/2" SS	1

Inlet - Tank Fill 1" - Chemical Pump

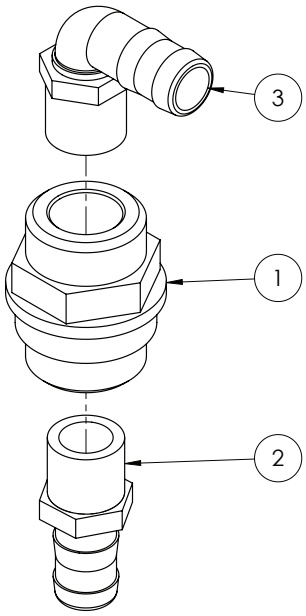

ITEM NO.	PART NUMBER	DESCRIPTION	QTY.
1	GA4572395	Main tank line return fitting 1”	1
2	GA5077718	Hose barb, Straight, 1” male thread x 1” hose	1
3	GA5077723	Hose barb, Elbow, 90 degree, 1” male x 1” hose	1

Inlet - Tank Fill 3" - Main & Side

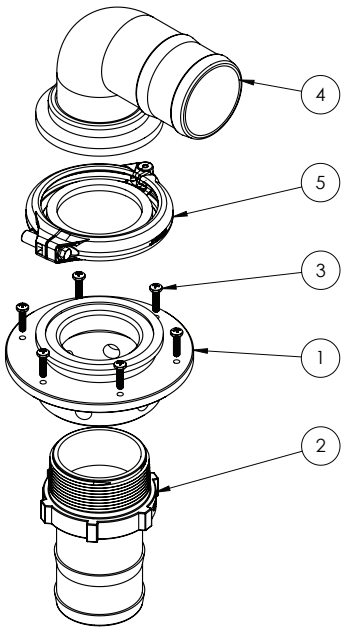

ITEM NO.	PART NUMBER	DESCRIPTION	QTY.
1	GA4550590	Tank Top Inlet Fitting, 3” Flange and 3” NPT Female Thread	1
2	GA5077741	Hose barb, Straight, 3” male thread x 3” hose	1
3	GA5000527	Screw, Pan head, 12G x 25mm, SS	6
4	GA5077875	Hose barb, Elbow, 90 degree, 3” flange x 3” hose	1
5	GA2000116	Flange Clamp, and Gasket, 3”	1

Inlet - Tank Fill 3" - Front

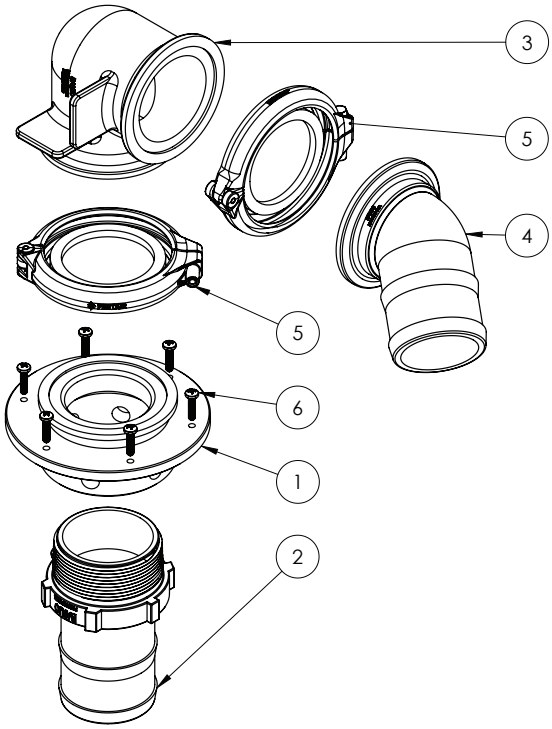

ITEM NO.	PART NUMBER	DESCRIPTION	QTY.
1	GA4550590	Tank Top Inlet Fitting, 3” Flange and 3” NPT Female Thread	1
2	GA5077741	Hose barb, Straight, 3” male thread x 3” hose	1
3	GA5077877	3" Flange X 3" Flange 90 Degree	1
4	GA5077874	3" Manifold Hose Barb 45 Degree	1
5	GA2000116	Flange Clamp, and Gasket, 3”	2
6	GA5000527	Screw, Pan head, 12G x 25mm, SS	6

Inlet - Hopper Tank 2" - Angled

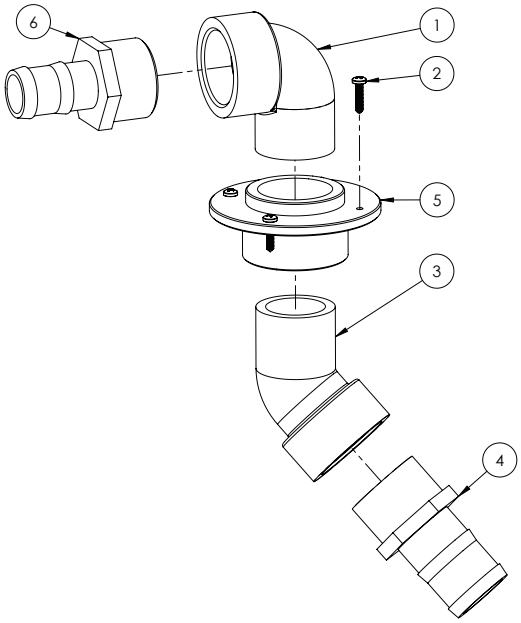

ITEM NO.	PART NUMBER	DESCRIPTION	QTY.
1	GA5078142	Street elbow, 90 degree, 2” male thread x 2” female thread, Banjo	1
2	GA5077739	Hose barb, Straight, 2” male thread x 1 1/2” hose, Banjo	1
3	GA5000527	Screw, Pan head, 12G x 25mm, SS	4
4	GA5078141	Street elbow, 45 degree, 2” male thread x 2” female thread, Banjo	1
5	GA5077737	Hose barb, Straight, 2” male thread x 2” hose, Banjo	1
6	GA4583370	Threaded Tank Flange 2”	1

Outlet - Tank Overflow 3"

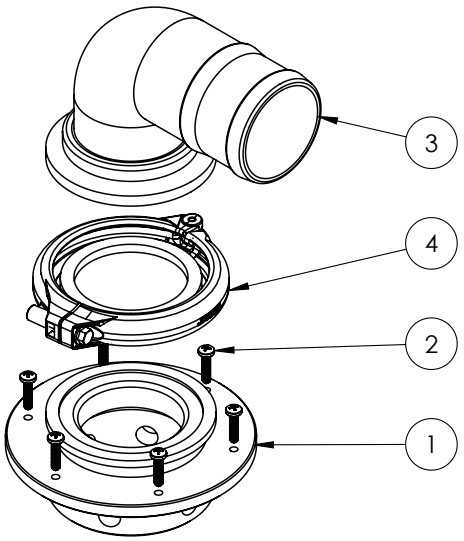

ITEM NO.	PART NUMBER	DESCRIPTION	QTY.
1	GA4550590	Tank Top Inlet Fitting, 3” Flange and 3” NPT Female Thread	1
2	GA5000527	Screw, Pan head, 12G x 25mm, SS	6
3	GA5077875	Hose barb, Elbow, 90 degree, 3” flange x 3” hose	1
4	GA2000116	Flange Clamp, and Gasket, 3”	1

Tank Fill - 3” Front Fill Assembly

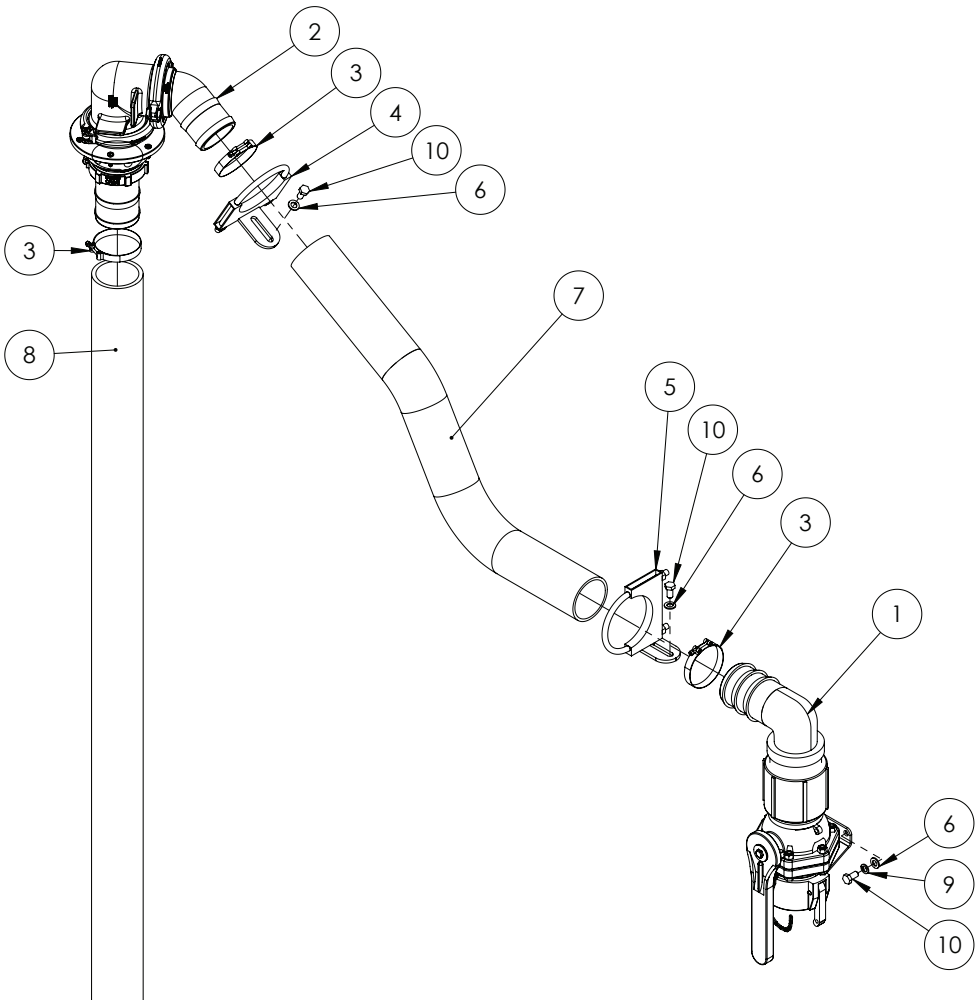

ITEM NO.	PART NUMBER	DESCRIPTION	QTY.
1	*	Tank Fill - Front - 3” Valve Assembly	1
2	*	Inlet - Tank Fill 3” - Front	1
3	GA5010195	Hose Clamp, 3”, T Bolt	3
4	GA4658835	Exhaust clamp / buffer bracket single	1
5	GA4658836	Exhaust clamp bracket ‘S’ bend pipe	1
6	GA5000117	Washer 10mm Flat SS HD	4
7	GA2000232	Hose, Suction, 75mm, Wire reinforced - Cut to 6500 mm	1
8	GA2000231	Hose, Suction, PVC, 75mm, Black - Cut to 1400 mm	1
9	GA5000137	Washer 10mm Spring SS	2
10	GA5006113	Bolt M10 x 20 GR8.8 ZP	4

* Sub-assembly on following pages

Tank Fill - 3” Side Fill Assembly

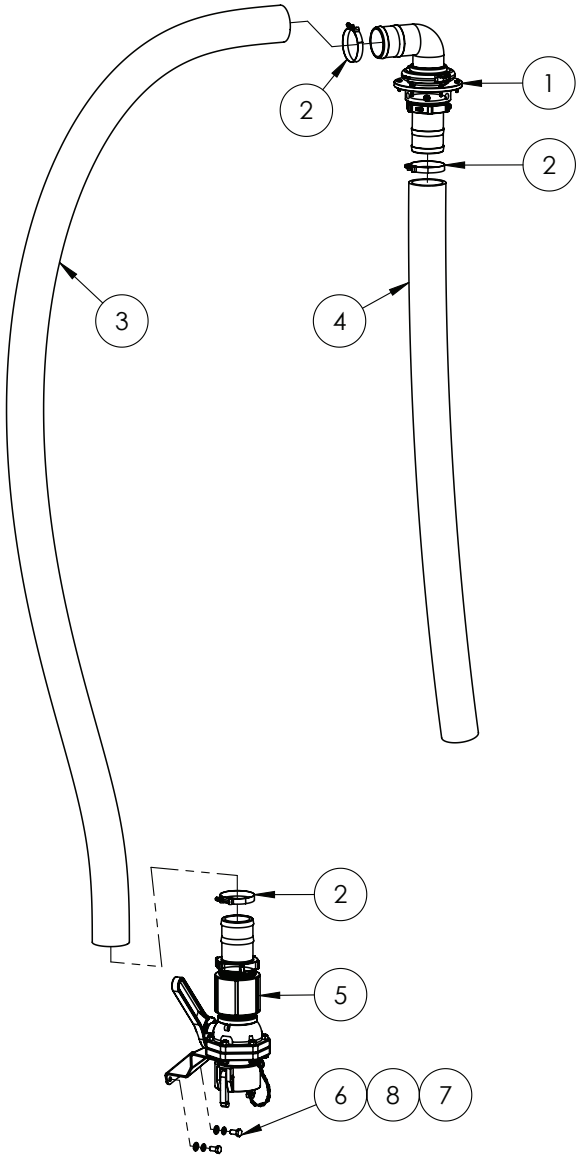

ITEM NO.	PART NUMBER	DESCRIPTION	QTY.
1	*	Inlet - Tank Fill 3” - Side	1
2	GA5010195	Hose Clamp, 3”, T Bolt	3
3	GA2000232	Hose, Suction, 75mm, Wire reinforced - Cut to 3000 mm	1
4	GA2000231	Hose, Suction, PVC, 75mm, Black - Cut to 1400 mm	1
5	*	Tank Fill - Side - 3” Valve Assembly	1
6	GA5006113	Bolt M10 x 20 GR8.8 ZP	2
7	GA5000117	Washer 10mm Flat SS HD	2
8	GA5000137	Washer 10mm Spring SS	2

* Sub-assembly on following pages

Tank Fill - Front - 3” Valve Assembly

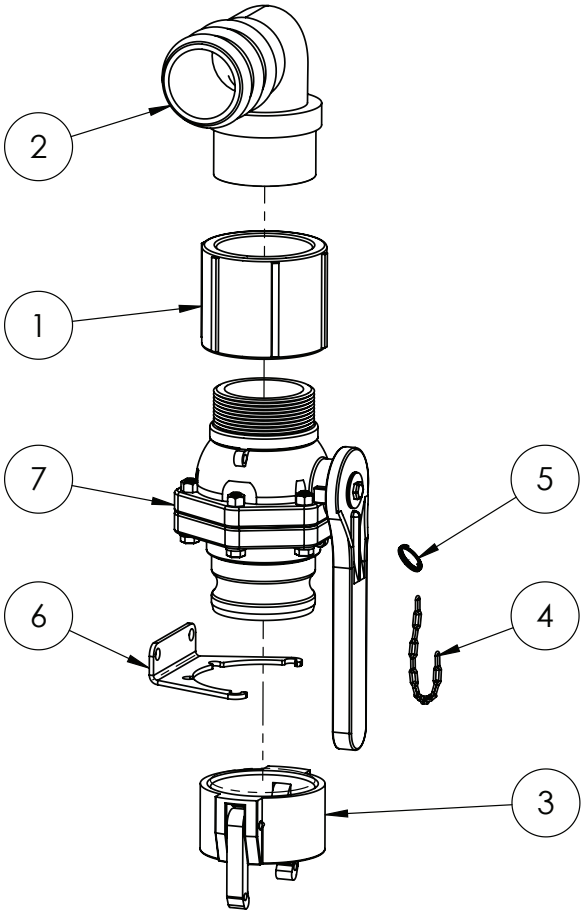

ITEM NO.	PART NUMBER	DESCRIPTION	QTY.
1	GA5077642	Coupling, socket, 3” female thread, Banjo	1
2	GA5077742	Hose barb, Elbow, 90 degree, 3” male thread x 3” hose, Banjo	1
3	GA5076719	Cam lever, Female cap, 3”, Banjo	1
4	GA5001491	Chain 2mm x 20 SS 316 - Cut 150mm long	1
5	GA5002077	Key ring, 25mm, SS	1
6	GA4509400	Plate, Ball Valve Mount, 3” Banjo	1
7	GA5078204	3” NPT Male x 3” Male Adaptor Long Handle	1

Tank Fill - Side - 3” Valve Assembly

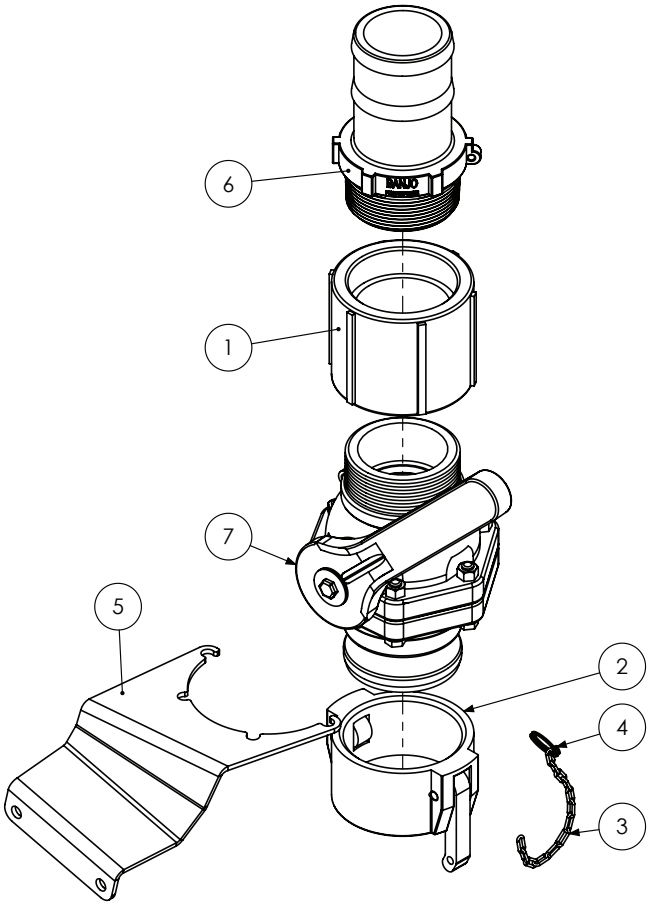

ITEM NO.	PART NUMBER	DESCRIPTION	QTY.
1	GA5077642	Coupling, socket, 3” female thread, Banjo	1
2	GA5076719	Cam lever, Female cap, 3”, Banjo	1
3	GA5001491	Chain 2mm x 20 SS 316 - Cut 150mm long	1
4	GA5002077	Key ring, 25mm, SS	1
5	GA4509890	Plate, Valve Mount, 3” Side Fill	1
6	GA5077741	Hose barb, Straight, 3" male thread x 3" hose	1
7	GA5078204	3” NPT Male x 3” Male Adaptor Long Handle	1

Breather Valve Assembly

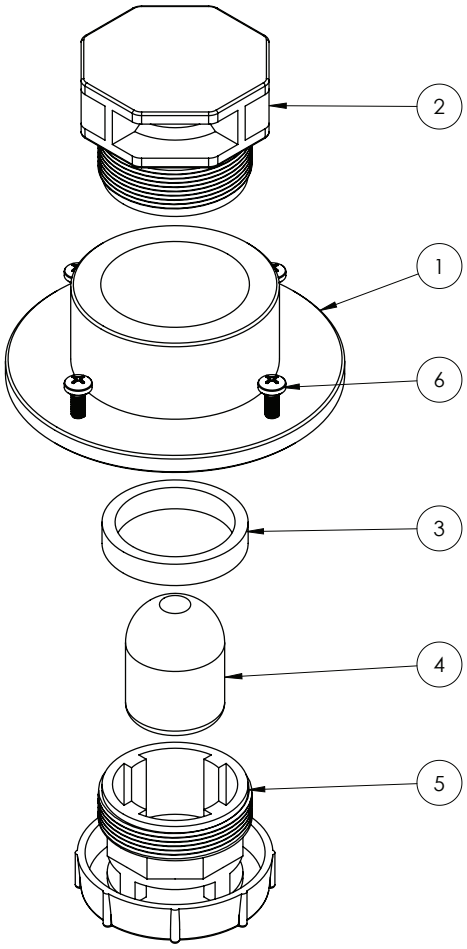

ITEM NO.	PART NUMBER	DESCRIPTION	QTY.
1	GA4583370	Threaded Tank Flange 2”	1
2	GA5000527	Screw, Pan head, 12G x 25mm, SS	1
3	GA4551975	Spacer, 56mm OD, 5mm wall, 10mm Uniboard Poly	1
4,5,6	GA5077046	Valve, Breather, Single Floating Ball	1

Dry Sight Tube - Float & Guide

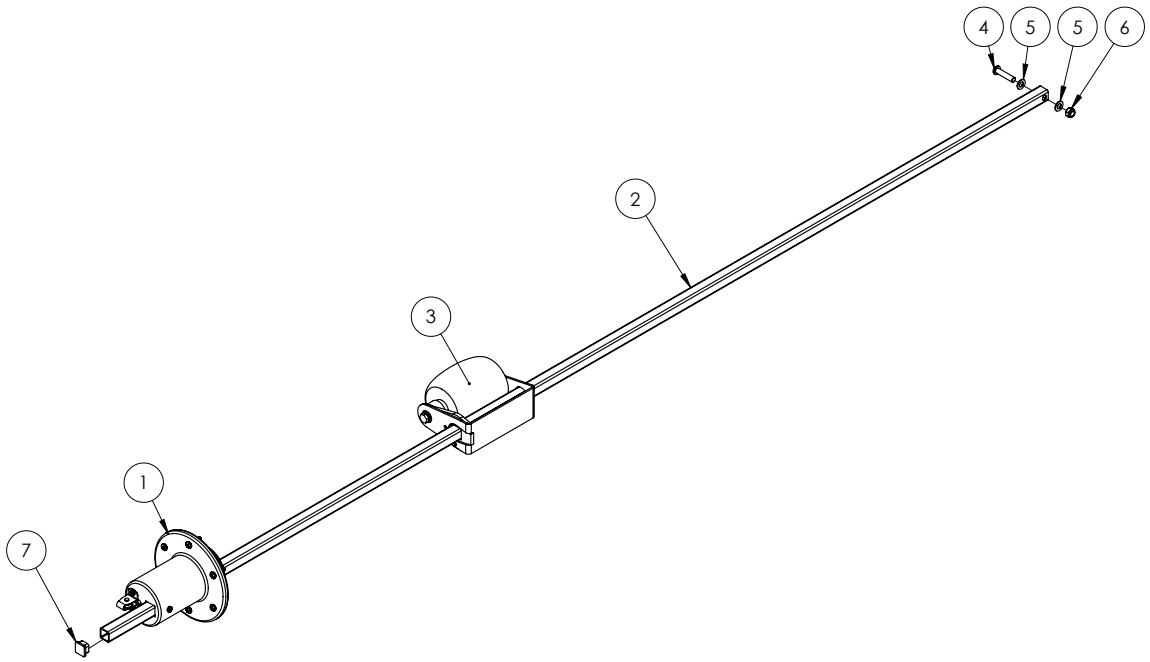

ITEM NO.	PART NUMBER	DESCRIPTION	QTY.
1	*	Dry Sight Tube - Locating Cap Assembly	1
2	GA5046955	19 x 19 x 1.6mm SS RHS - cut 2150 mm	1
3	*	Dry Sight Tube - Float Assembly	1
4	GA5051370	BHCS M8 x 35mm SS	1
5	GA5003643	Washer 8mm SS HD	2
6	GA5052590	Nut M8 Nyloc SS	1
7	GA5001101	Square tube Insert 19 x 19mm, Black	1

* Sub-assembly on following pages

Dry Sight Tube - Locating Cap Assembly

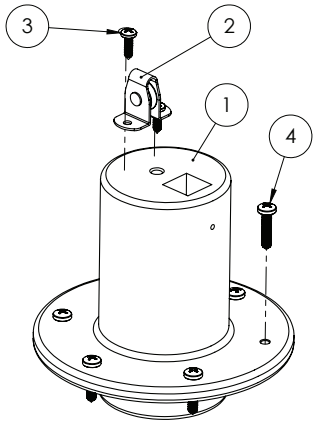

ITEM NO.	PART NUMBER	DESCRIPTION	QTY.
1	MACH0308	Float tube locating cap (Blk Poly)	1
2	GA5015221	Pulley, Upright, 19mm, Suit sight tube cable roller	1
3	GA5014817	Screw 10G x 5/8" Pan Head SS	2
4	GA5000527	Screw, Pan head, 12G x 25mm, SS	6

Dry Sight Tube - Float Assembly

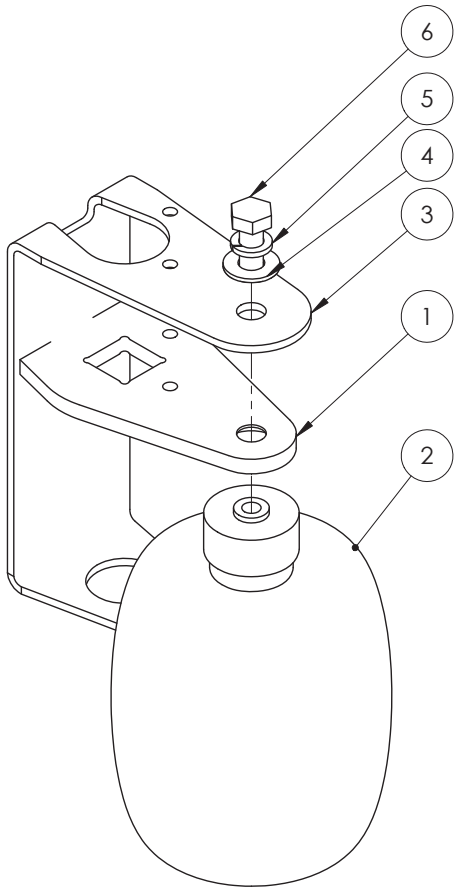

ITEM NO.	PART NUMBER	DESCRIPTION	QTY.
1	GA5072660	Float Plate Dry Sight Tube	1
2	GA5072665	Ball Float 4" Plastic 5/16" Whitworth Threads	1
3	GA4401610	Plate, Float, Dry Sight Tube	1
4	GA5003643	Washer 8mm Flat SS HD	1
5	GA5004919	Washer 8mm Spring SS	1
6	GA5048485	Set Screw, 5/16" x 3/4" BSW, SS GR8	1

Dry Sight Tube - Cap & Tube Assembly

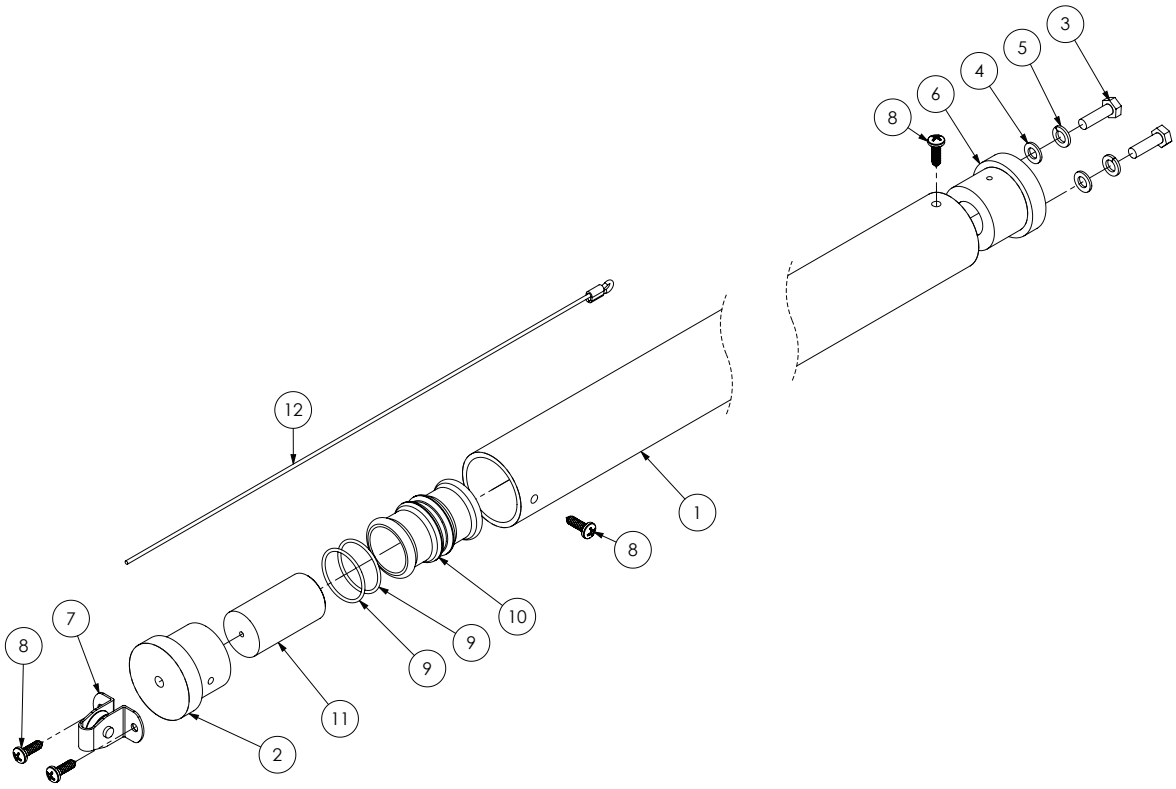

ITEM NO.	PART NUMBER	DESCRIPTION	QTY.
-	GA5065075	Decal, Dry sight tube, 6000L, Crop Cruiser	-
1	GA5002979	Sight tube, Clear, 38 ID x 44 OD x 2000 mm long, Polycarbonate	1
2	MACH0306	Remote sight tube end cap (Blk Poly)	1
3	GA5004065	Bolt M6 x 20 ZP GR8.8	2
4	GA5004437	Washer 6mm Flat SS	2
5	GA5004447	M6 Spring washer SS	2
6	MACH0316	Tube End Cap with Light Attachment	1
7	GA5015221	Pulley, Upright, 19 mm, Suit sight tube cable roller	1
8	GA5014817	Screw 10G x 5/8" Pan Head SS	4
9	GA5012529	O-ring, 34.65 x 1.78 mm, BS024	2
10	MACH0307	Remote sight tube level indicator	1
11	MACH0317	Level Indicator Insert	1
12	GA4902149	Cable, Pre assembly, 5m - Includes cable and ferrules	-
	GA5017873	Cable, Wire rope, 1.6 mm, 7x19 core, 316 SS, suit sight tube - Cut to 5 metres	1
	GA5008643	Ferrule, Hand swage, Nickle plated copper, suits GA5017873 cable	2

Dry Sight Tube - Mount

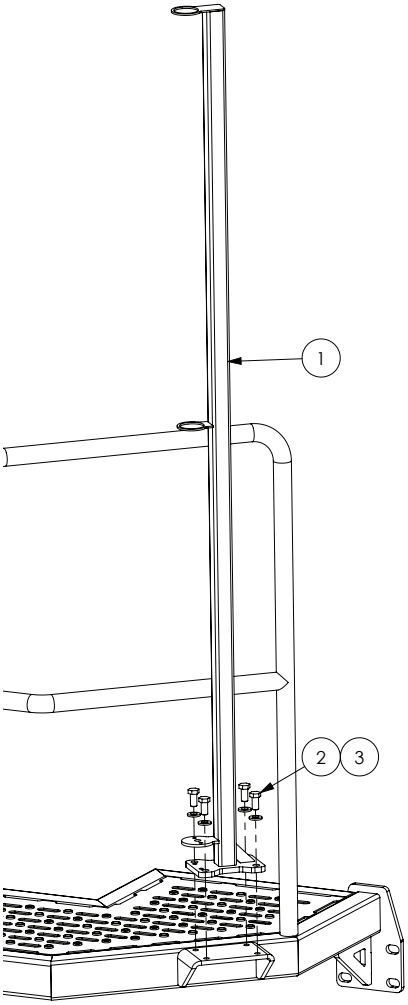

ITEM NO.	PART NUMBER	DESCRIPTION	QTY.
1	GA4659830	Dry Sight Tube Mount	1
2	GA5011229	Bolt M12 x 25 GR8.8 ZP	4
3	GA5000577	Washer 12mm SS Flat HD	4

Tank Stops, Tank & Overflow Brackets

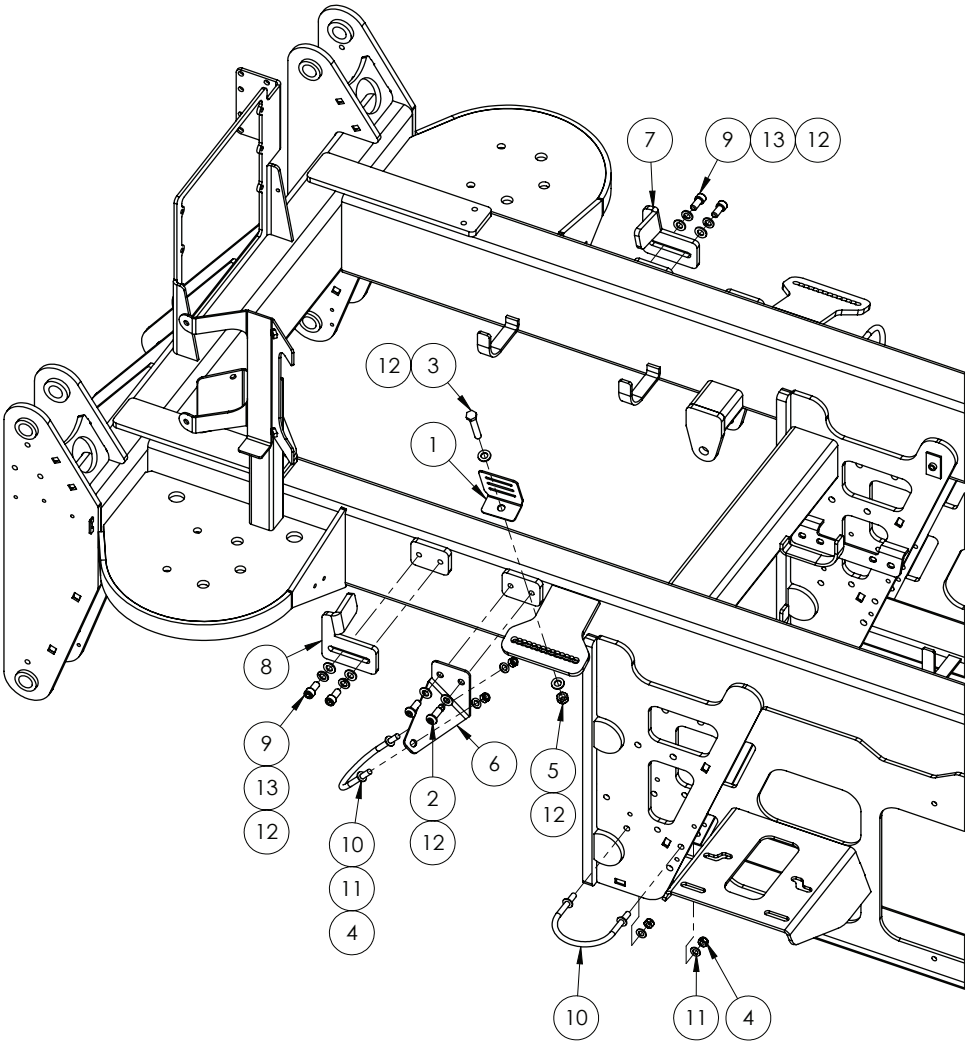

ITEM NO.	PART NUMBER	DESCRIPTION	QTY.
-	GA5003859	Strap, Tank, 50mm, Goldacres branded, (75m/roll) (price is per meter)	-
1	F70127A	Bracket, Tank strap, 50mm	4
2	GA5051530	BHCS M12 x 30 SS A2-70	2
3	GA5000351	Bolt M12 x 75 GR8.8 ZP	4
4	GA5000141	Nut M10 Nyloc ZP	4
5	GA5012461	Nut M12 Nyloc ZP	4
6	GA4404535	Plate, Over Flow Hose Mount, Side Chassis, G3 G4	1
7	GA4524870	Plate, Tank Stop 3000L LH G3	1
8	GA4524875	Plate, Tank Stop 3000L RH G3	1
9	GA5000297	SHCS M12 x 25 GR12.9 ZP	4
10	GA5070905	U bolt, Round top, M10 x 118 x 115mm, with stopper washers, Z/P	2
11	GA5000117	Washer M10 Flat SS HD	4
12	GA5000577	Washer M12 Flat SS HD	14
13	GA5000575	Washer 12mm Spring SS	4

Chapter 12

WHEELS & MUDGUARD

Mud Guards - Front Axle 2WD

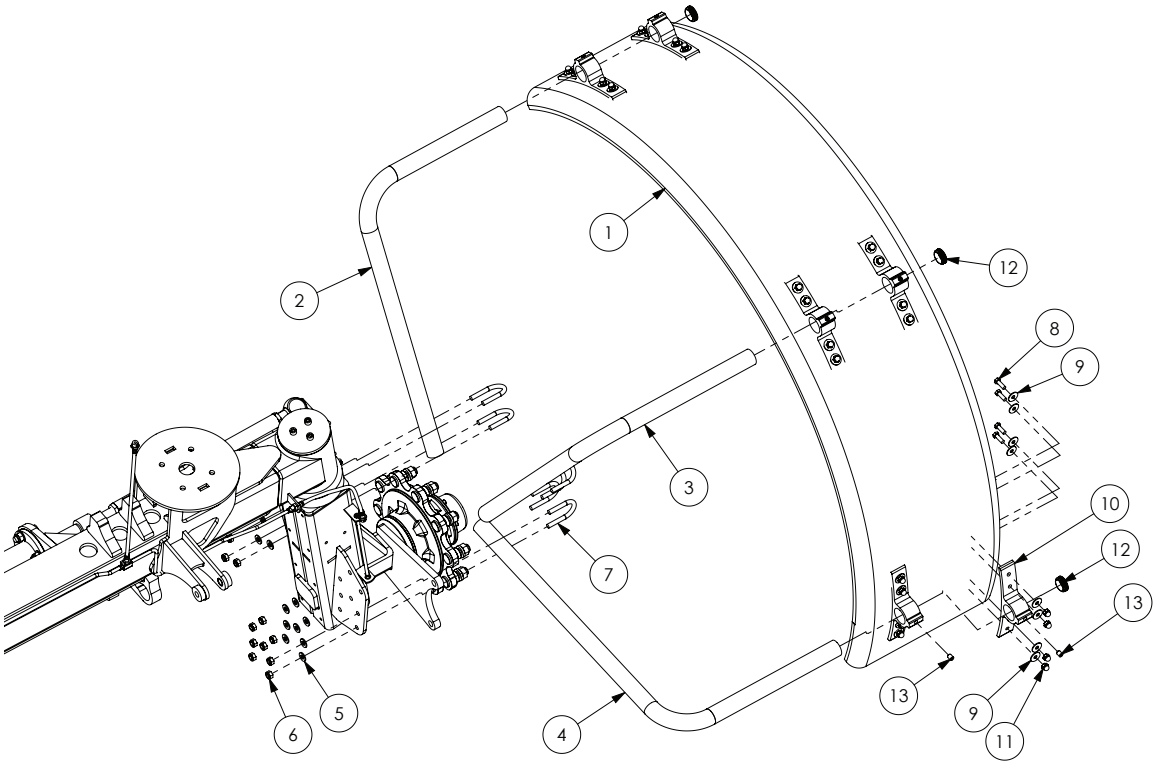

Quantities shown are per side.

ITEM NO.	PART NUMBER	DESCRIPTION	QTY.
1	GA5003323	Mudguard 400W x R1000	1
	GA5003825	Mudguard 500W x R1000	
2	*	Pipe, Mudguard Front Wheel Front Pipe	1
3	*	Pipe, Mudguard Front Wheel Middle Pipe	1
4	*	Pipe, Mudguard Front Wheel Rear Pipe	1
5	GA5000577	Washer 12mm Flat SS HD	12
6	GA5012461	Nut M12 Nyloc ZP	12
7	GA5071209	U Bolt M12 x 91L x 50W RT G/P	6
8	GA5006161	Bolt M10 x 25 GR8.8 ZP	24
9	GA5002565	Washer, 3/8 ID x 1 OD, Flat SS	48
10	GA5020450	Mudguard Bracket Plastic Black	6
11	GA5011133	Nut M10 Dome nut SS	24
12	GA5003925	Insert round 45mm x 0.8 - 3.0mm	6
13	GA5050675	Grub Screw M12 x 16 SS	6

* See Mudguard Pipe Tables on following pages for details.

Mud Guards - Front Axle 4WD

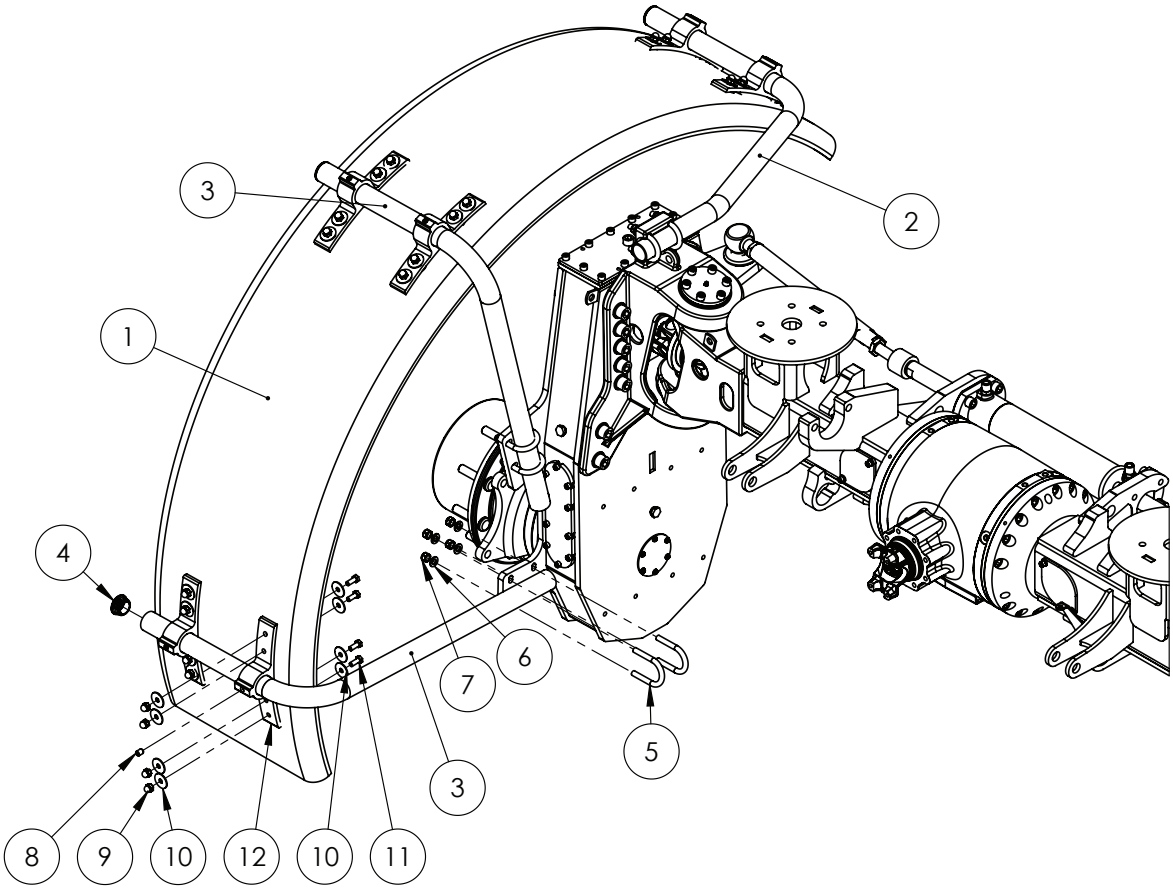

Quantities shown are per side.

ITEM NO.	PART NUMBER	DESCRIPTION	QTY.
1	GA5003323	Mudguard 400W x R1000	1
	GA5003825	Mudguard 500W x R1000	
2	GA5072330	Pipe, Mudguard Front Wheel Front Pipe 4WD	1
3	GA5071680	Pipe, Mudguard Front Wheel Middle & Rear Pipe 4WD	2
4	GA5003925	Insert round 45mm x 0.8 - 3.0mm	6
5	GA5071209	U Bolt M12 x 91L x 50W RT G/P	6
6	GA5000577	Washer 12mm Flat SS HD	12
7	GA5012461	Nut M12 Nyloc ZP	12
8	GA5050675	Grub Screw M12 x 16 SS	6
9	GA5011133	Nut M10 Dome nut SS	24
10	GA5002595	Washer, 3/8" x 1 1/2" OD, Flat SS	48
11	GA5006161	Bolt M10 x 25 GR8.8 ZP	24
12	GA5020450	Mudguard Bracket Plastic Black	6

Mud Guards - Rear Axle

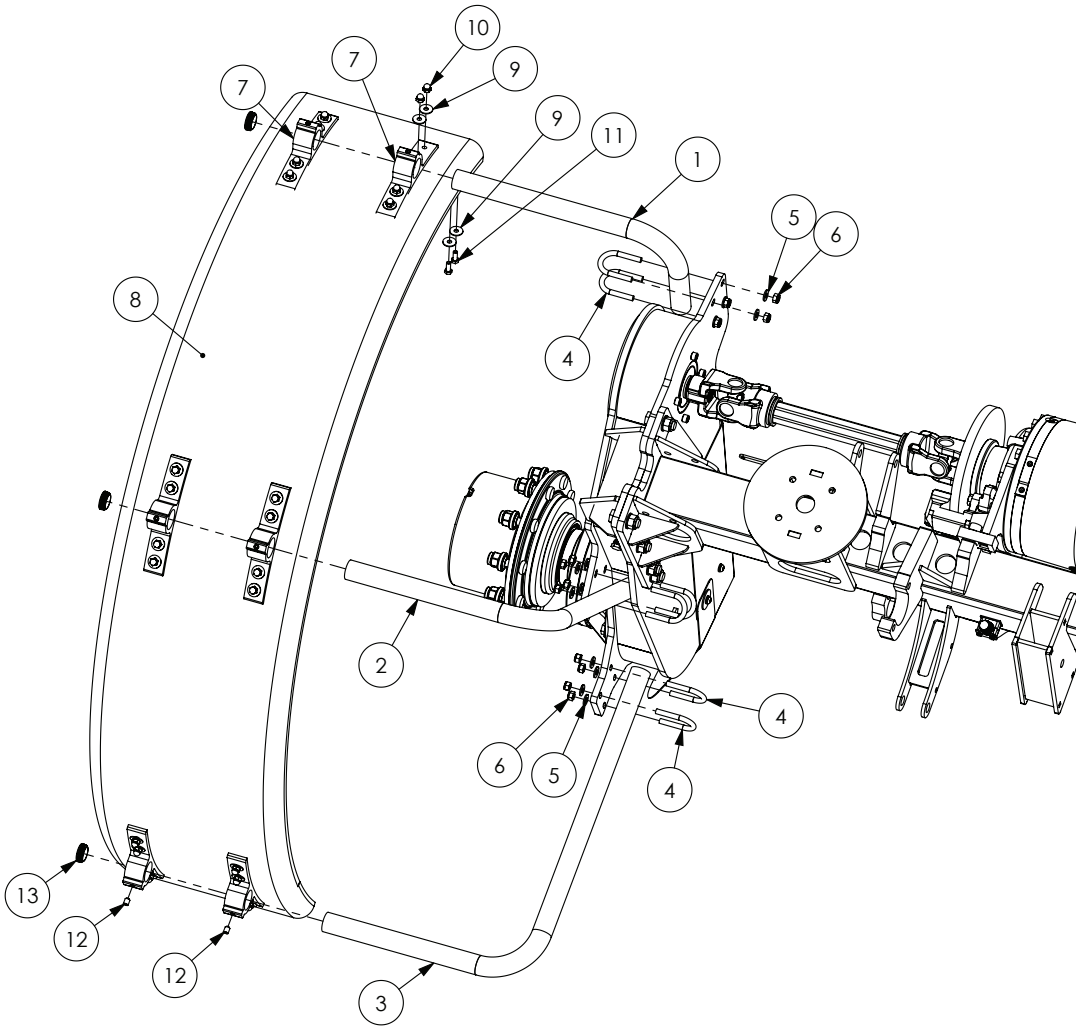

Quantities shown are per side.

ITEM NO.	PART NUMBER	DESCRIPTION	QTY.
1	*	Pipe, Mudguard Rear Wheel Front Pipe	1
2	*	Pipe, Mudguard Rear Wheel Middle Pipe	1
3	*	Pipe, Mudguard Rear Wheel Rear Pipe	1
4	GA5071209	U Bolt M12 x 91L x 50W RT G/P	6
5	GA5000577	Washer 12mm Flat SS HD	12
6	GA5012461	Nut M12 Nyloc ZP	12
7	GA5020450	Mudguard Bracket Plastic Black	6
8	GA5003323	Mudguard 400W x R1000	1
	GA5003825	Mudguard 500W x R1000	
9	GA5002565	Washer, 3/8" ID x 1" OD, Flat SS	48
10	GA5011133	Nut M10 Dome SS	24
11	GA5006161	Bolt M10 x 25 GR8.8 ZP	24
12	GA5050675	Grub Screw M12 x 16 SS	6
13	GA5003925	Insert round 45mm x 0.8 - 3.0mm	6

* See Mud Guard Pipe Tables on following pages for details.

Mud Guards - Pipes

FIXED AXLE - FRONT 2WD

ITEM NO.	PART NUMBER	DESCRIPTION	QTY.
2	GA5071670	Pipe, Mudguard Front Wheel R38 Front Pipe	2
	GA5071673	Pipe, Mudguard Front Wheel R46 Front Pipe	
3	GA5071671	Pipe, Mudguard Front Wheel R38 Middle Pipe	2
	GA5071674	Pipe, Mudguard Front Wheel R46 Middle Pipe	
4	GA5071672	Pipe, Mudguard Front Wheel R38 Rear Pipe	2
	GA5071675	Pipe, Mudguard Front Wheel R46 Rear Pipe	

FIXED AXLE - REAR

ITEM NO.	PART NUMBER	DESCRIPTION	QTY.
1	GA5071681	Pipe, Mudguard Rear Wheel R46 Front Pipe	2
	GA5071678	Pipe, Mudguard Rear Wheel R38 Front Pipe	
2	GA5071682	Pipe, Mudguard Rear Wheel R46 Middle Pipe	2
	GA5071679	Pipe, Mudguard Rear Wheel R38 Middle Pipe	
3	GA5071683	Pipe, Mudguard Rear Wheel R46 Rear Pipe	2
	GA5071680	Pipe, Mudguard Rear Wheel R38 Rear Pipe	

ADJUSTABLE AXLE 2-3M & 3-4M - FRONT

ITEM NO.	PART NUMBER	DESCRIPTION	QTY.
2	GA5071670	Pipe, Mudguard Front Wheel R38 Front Pipe - Not used on 2-3m	2
	GA5071673	Pipe, Mudguard Front Wheel R46 Front Pipe - Not used on 2-3m	
3	GA5071985	Pipe, Mudguard Front Wheel Middle Pipe	2
4	GA5071672	Pipe, Mudguard Front Wheel R38 Rear Pipe	2
	GA5071675	Pipe, Mudguard Front Wheel R46 Rear Pipe	

ADJUSTABLE AXLE 2-3M & 3-4M - REAR

ITEM NO.	PART NUMBER	DESCRIPTION	QTY.
1	GA5071681	Pipe, Mudguard Rear Wheel R46 Front Pipe	2
	GA5071678	Pipe, Mudguard Rear Wheel R38 Front Pipe	
2	GA5071682	Pipe, Mudguard Rear Wheel R46 Middle Pipe	2
	GA5071679	Pipe, Mudguard Rear Wheel R38 Middle Pipe	
3	GA5071683	Pipe, Mudguard Rear Wheel R46 Rear Pipe	2
	GA5071680	Pipe, Mudguard Rear Wheel R38 Rear Pipe	

Crop Divider - Front Axle 2WD

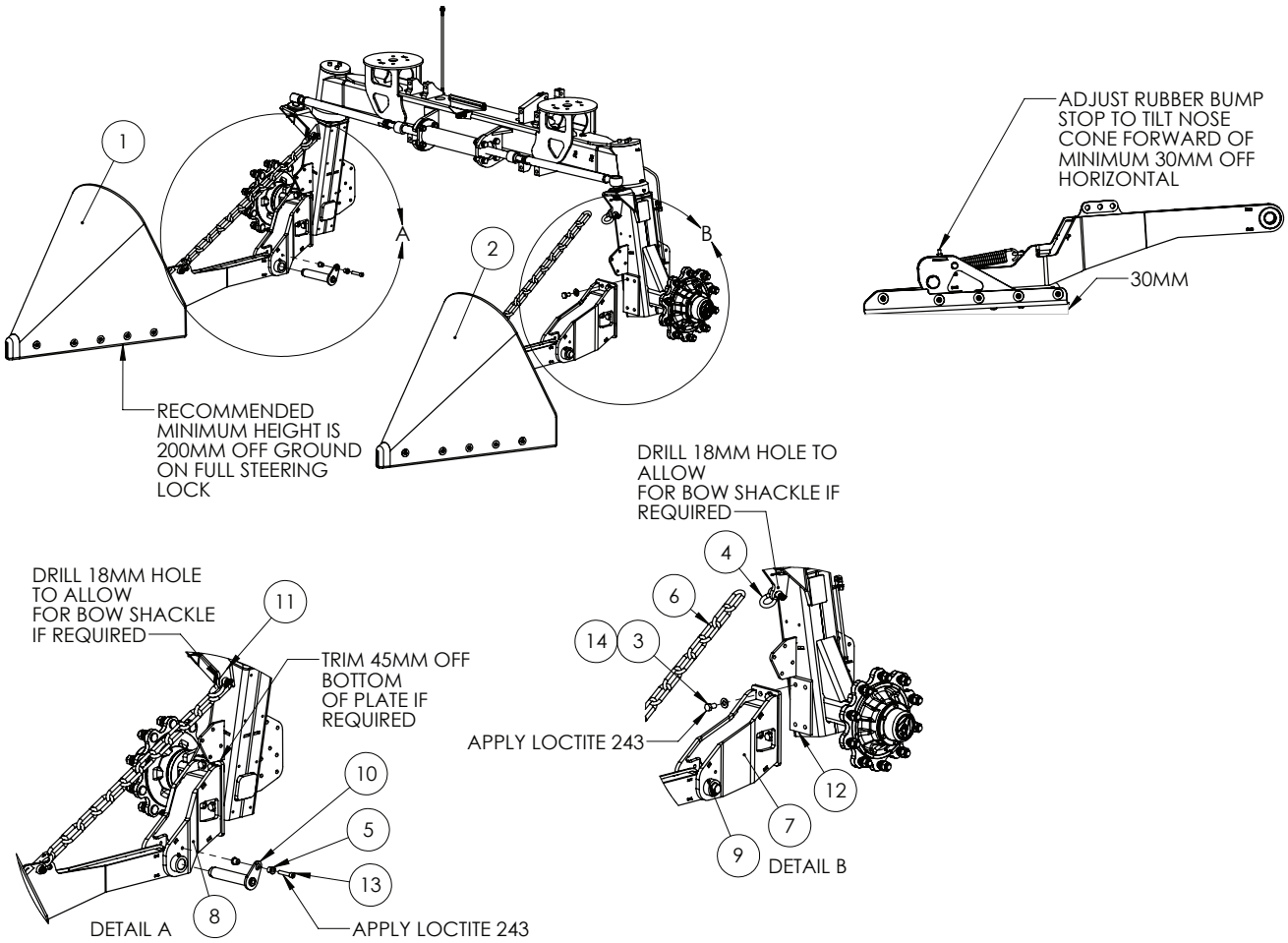

ITEM NO.	PART NUMBER	DESCRIPTION	QTY.
1	GA4949705	ASSEMBLY, NOSE CONE, CROP DIVIDER, RIGHT, MY11 ONWARD`	1
2	GA4949700	ASSEMBLY, NOSE CONE, CROP DIVIDER, LEFT, MY11 ONWARD	1
3	GA5000913	SET SCREW M16 X 30 GR8.8 ZP	8
4	GA5075230	BOW SHACKLE 13MM WLL 3.25T BLACK	4
5	MACH0152	BUSH WITH SHOULDER, 12.3 ID X 25 OD X 21 LONG, SUIT PARALIFT PIN BOLTS	4
6	GA4909235	CHAIN, LONG LINK, 13MM, GR 80, PAINT BLACK, CUT TO LENGTH	2
7	GA4603955	CROP DIVIDER MOUNT, 2WD FRONT LEFT, G4	1
8	GA4603960	CROP DIVIDER MOUNT, 2WD FRONT RIGHT, G4	1
9	GA5012203	GREASE NIPPLE, SHORT, 1/4 UNF, MACH0207	4
10	GA4603500	PIN, CROP DIVIDER, ARM PIVOT WITH LOCKING PLATE, 1.5” OD, MY21	2
11	GA4412245	PLATE, CHAIN BRACKET, 2WD FRONT, 2-3	2
12	GA4402635	PLATE, CROP DIVIDER MOUNT, DROPLEG, G4	2
13	GA0500020	SHCS M12 X 60, ZP, GR 12.9	2
14	GA5001043	WASHER M16 FLAT SS HD	8

Crop Divider - Front Axle 4WD

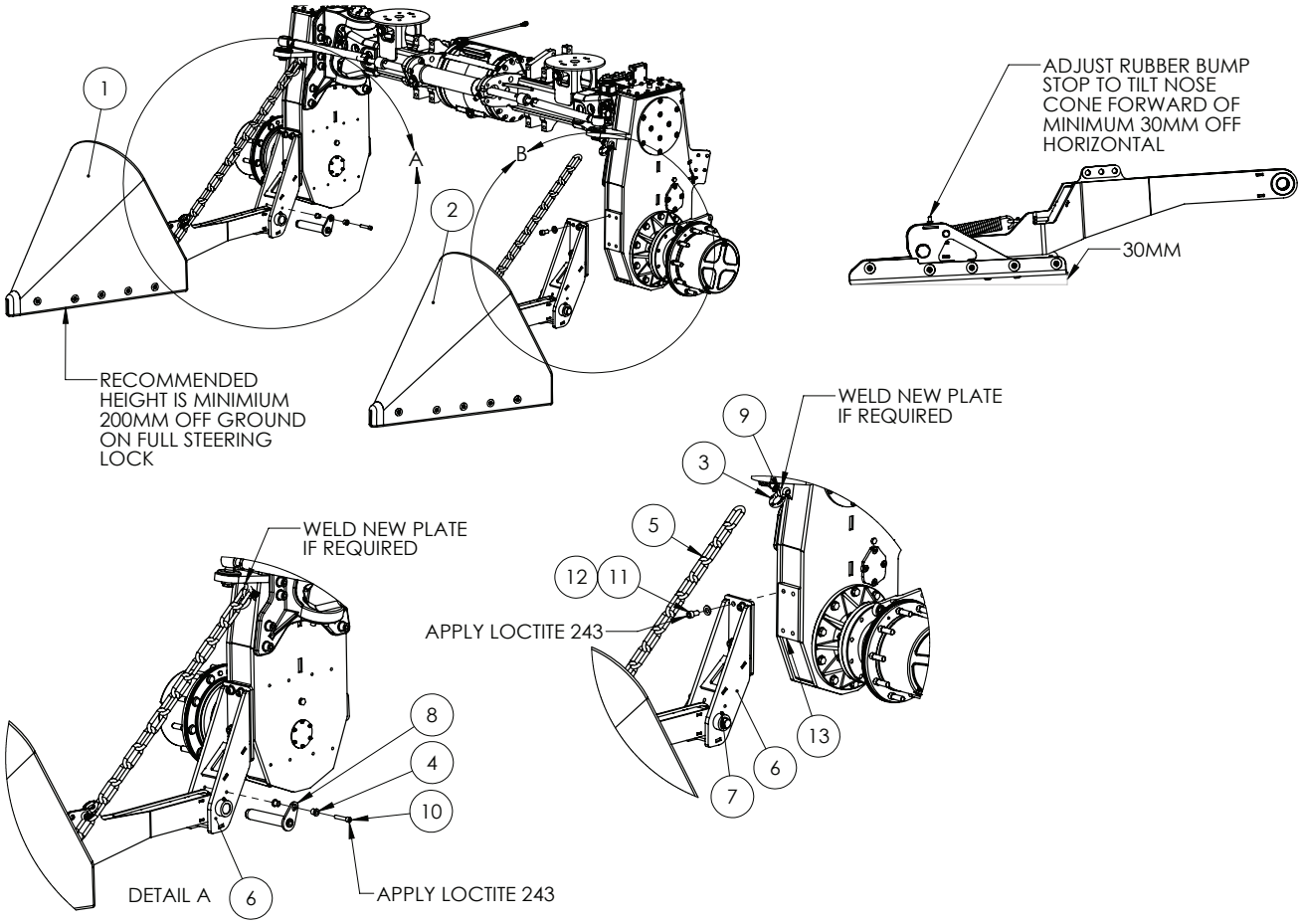

ITEM NO.	PART NUMBER	DESCRIPTION	QTY.
1	GA4949705	ASSEMBLY, NOSE CONE, CROP DIVIDER, RIGHT, MY11 ONWARD	1
2	GA4949700	ASSEMBLY, NOSE CONE, CROP DIVIDER, LEFT, MY11 ONWARD	1
3	GA5075230	BOW SHACKLE 13MM WLL 3.25T BLACK	4
4	MACH0152	BUSH WITH SHOULDER, 12.3 ID X 25 OD X 21 LONG, SUIT PARALIFT PIN BOLTS	4
5	GA4909235	CHAIN, LONG LINK, 13MM, GR 80, PAINT BLACK, CUT TO LENGTH	2
6	GA4602560	CROP DIVIDER MOUNT, FRONT, 4WD, G4	2
7	GA5050450	GREASE NIPPLE, 6MM	4
8	GA4603500	PIN, CROP DIVIDER, ARM PIVOT WITH LOCKING PLATE, 1.5” OD, MY21	2
9	GA4504665	PLATE, TIE ROD MOUNT GUSSET. 4WD FRONT DROPLEG, MY16	2
10	GA0500020	SHCS M12 X 60, ZP, GR 12.9	2
11	GA5000915	SHCS M16 X 30 GR12.9 ZP	8
12	GA5001043	WASHER M16 FLAT SS HD	8
13	GA4402635	PLATE, CROP DIVIDER MOUNT, DROPLEG, G4	2

Crop Divider - Nose Cone Assembly

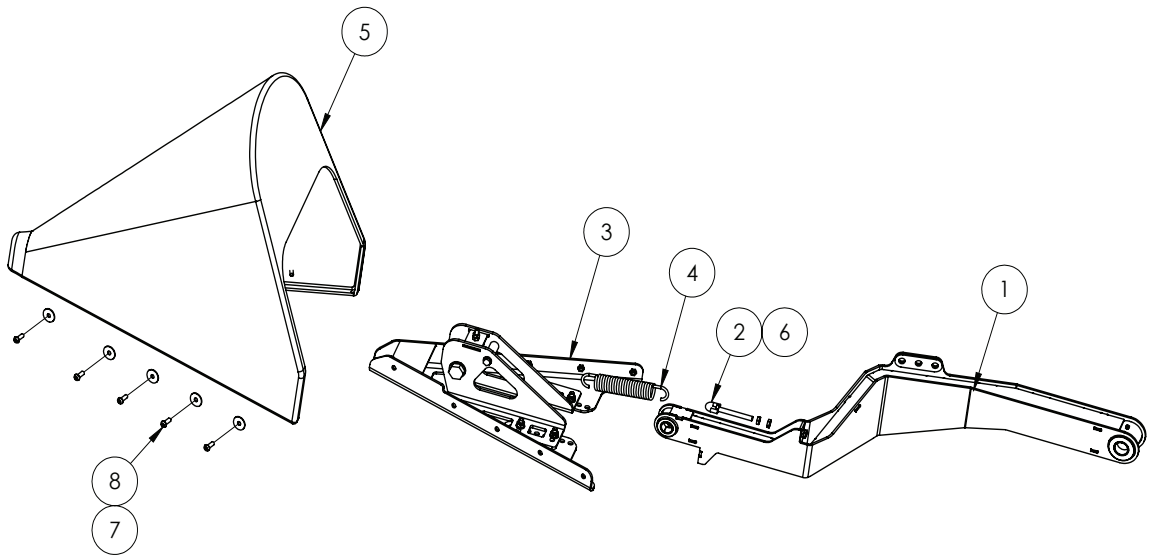

ITEM NO.	PART NUMBER	DESCRIPTION	QTY.
1	GA4602565	Left Arm, Crop Divider, MY19	1
2	GA5075150	Eye Bolt 12mm x 100mm Short	1
3	GA4949675	Nose Cone Frame, Crop Divider	1
4	GA5006345	Spring, Tension, 45 OD x 260 long x 7mm, 120H, small boom.	1
5	GA5073735	Nose Cone, Crop Divider, MY19	1
6	GA5071280	Nut, M12 Half Lock Nut, ZP	4
7	GA5002595	Washer 3/8 x 1 1/2 Flat SS	10
8	GA5048120	BHCS M10 x 30 SS A2-70	10

Quantities shown are per side.

Crop Divider - Nose Cone Frame Assembly

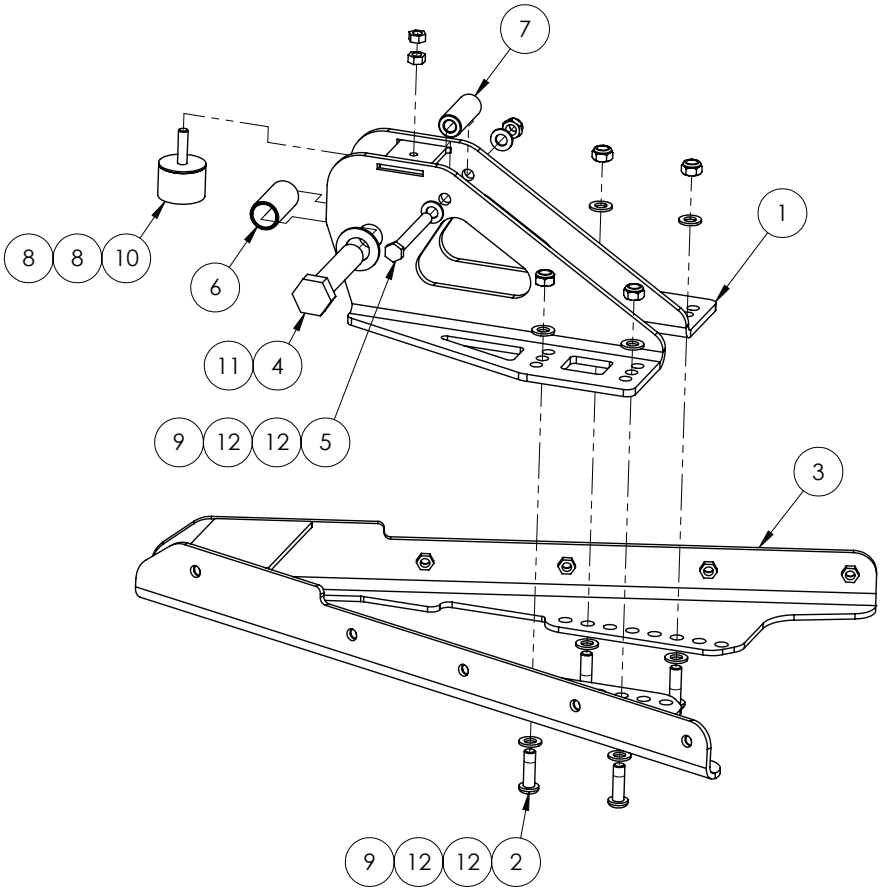

ITEM NO.	PART NUMBER	DESCRIPTION	QTY.
1	GA4602530	Adjuster, Crop Divider, MY19	1
2	GA0500079	BHCS M12 x 40 GR12.9 ZP & Bake CR3	4
3	GA4602525	Base, Crop Divider, MY19	1
4	GA5006149	Bolt 1 UNC x 4 1/2 GR8 ZP	1
5	GA5000259	Bolt M12 x 100 GR8.8 ZP	1
6	GA4551350	Bush Crush Tube, Crop Divider, MY19	1
7	GA4551355	Bush, Spring End, Crop Divider, MY19	1
8	GA5012459	Nut M10 Hex ZP	2
9	GA5012461	Nut M12 Nyloc ZP	5
10	GA5052815	Rubber Stopper, Diameter 50 x 35 Long, With M10 x 35 Stud	1
11	GA5001893	Washer 1 x 1 7/8 Flat Zinc	1
12	GA5000577	Washer M12 Flat SS HD	10

Crop Deflectors - Front Axle 2WD

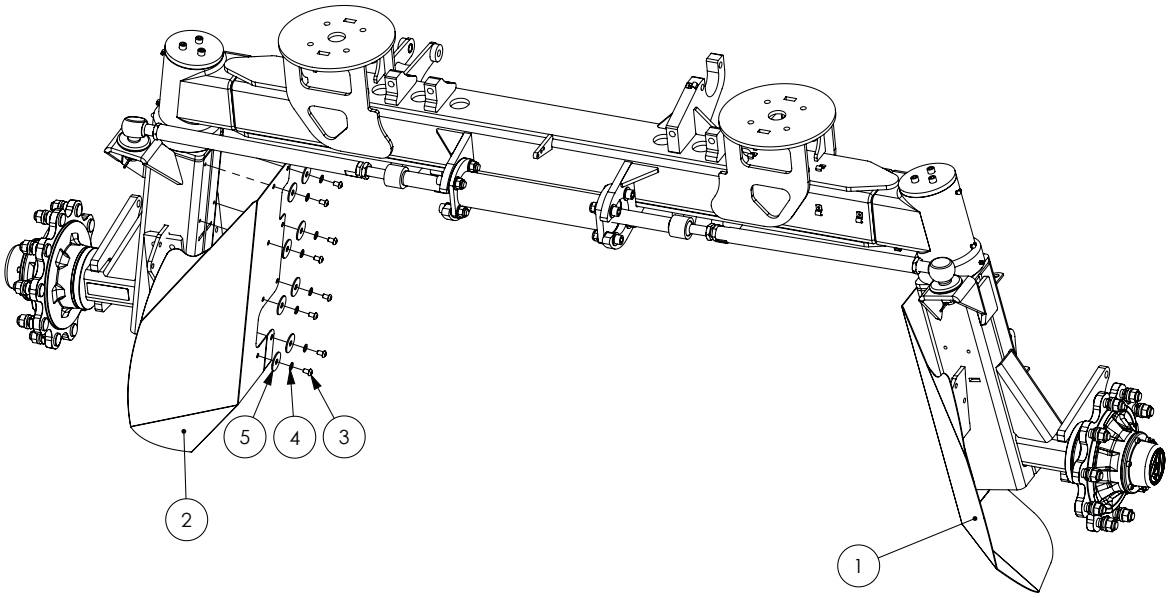

ITEM NO.	PART NUMBER	DESCRIPTION	QTY.
1	GA4507515	Crop Deflector Front LH	1
2	GA4507510	Crop Deflector Front RH	1
3	GA0500003	BHCS M10 x 16 SS A2-70	16
4	GA5000117	Washer 10mm Flat SS HD	16
5	GA4535345	Washer, 50 OD x 14.5 mm ID, SS	16

Crop Deflectors - Front Axle 4WD

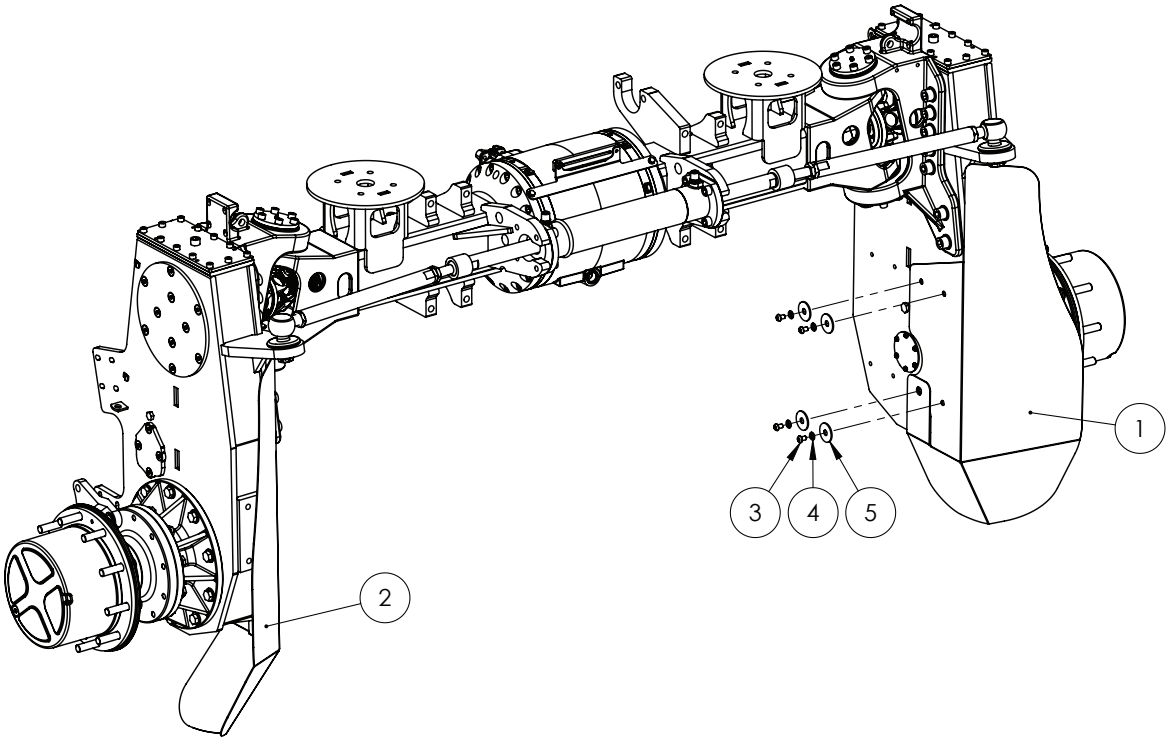

ITEM NO.	PART NUMBER	DESCRIPTION	QTY.
1	GA4402630	Plate, Crop Deflector, LH Front, 4WD	1
2	GA4402625	Plate, Crop Deflector, RH Front, 4WD	1
3	GA0500003	BHCS M10 x 16 SS A2-70	8
4	GA5000117	Washer 10mm Flat SS HD	8
5	GA4535345	Washer, 50 OD x 14.5 mm ID, SS	8

Crop Deflectors - Rear Axle

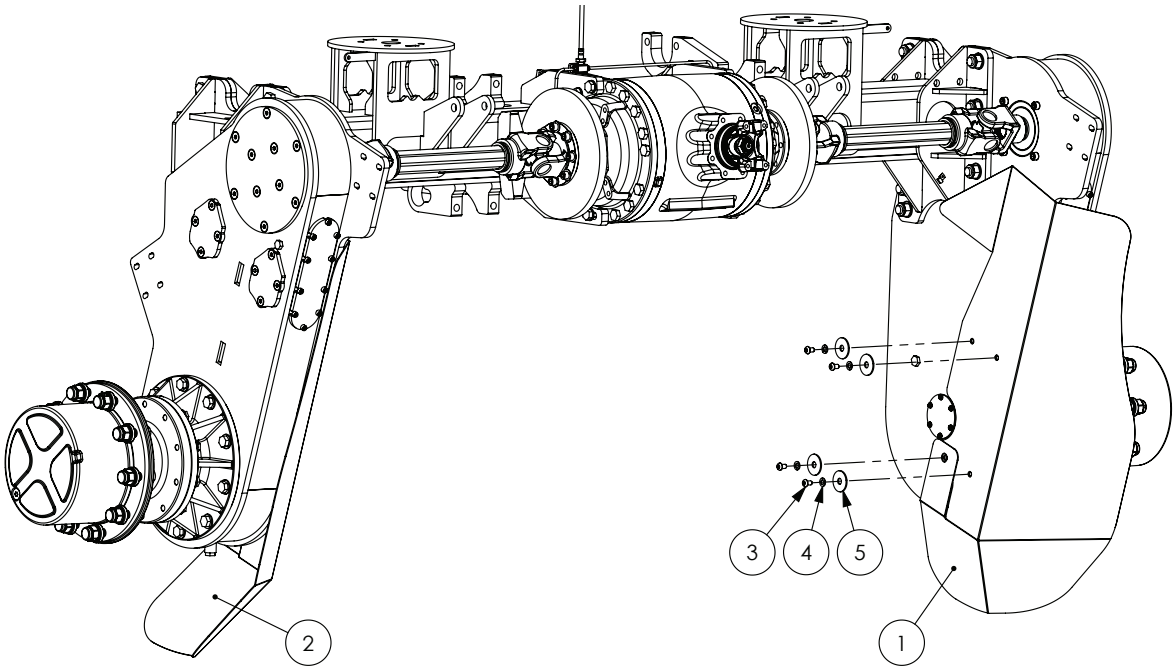

ITEM NO.	PART NUMBER	DESCRIPTION	QTY.
1	GA4500325	Plate, Crop Deflector, Rear LH	1
2	GA4500320	Plate, Crop Deflector, Rear RH	1
3	GA0500003	BHCS M10 x 16 SS A2-70	8
4	GA5000117	Washer 10mm Flat SS HD	8
5	GA4535345	Washer, 50 OD x 14.5 mm ID, SS	8

Front Wheel Mounting - 2WD

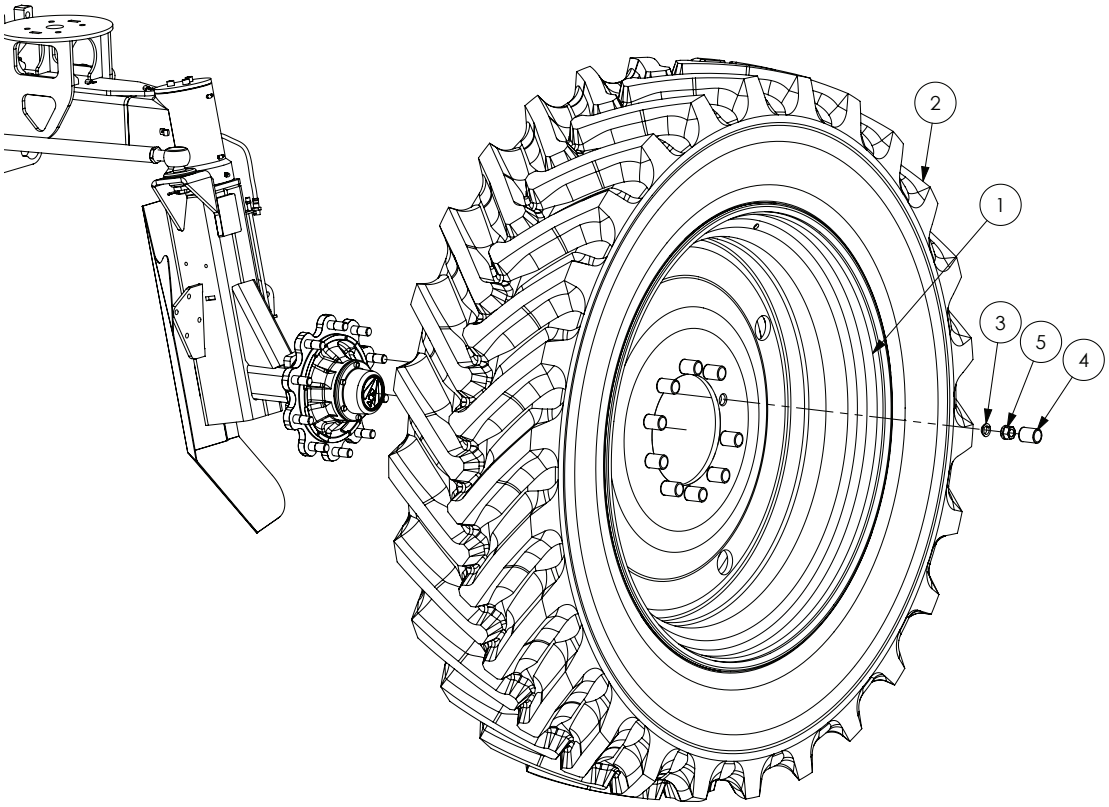

ITEM NO.	PART NUMBER	DESCRIPTION	QTY.
1	*	See 'Tyres and Rims' Section	2
2	*		2
3	GA5018900	Tapered spring Washers suit M22 wheel stud (329F003)	20
4	GA5054675	Cap M20 hex Wheel nut cover	20
5	GA5052165	Wheel nut kit, ADR (Pack of 10 nuts & 10 washers)	2

ALTERNATIVE WHEEL NUT

PART NUMBER	DESCRIPTION
GA5018892	Wheel nut, M22 X 1.5mm, ZP (Tapered nut requires no washer)

NOTE: Alternative wheel nut shown above can be purchased individually and requires no washer.

Front Wheel Mounting - 4WD

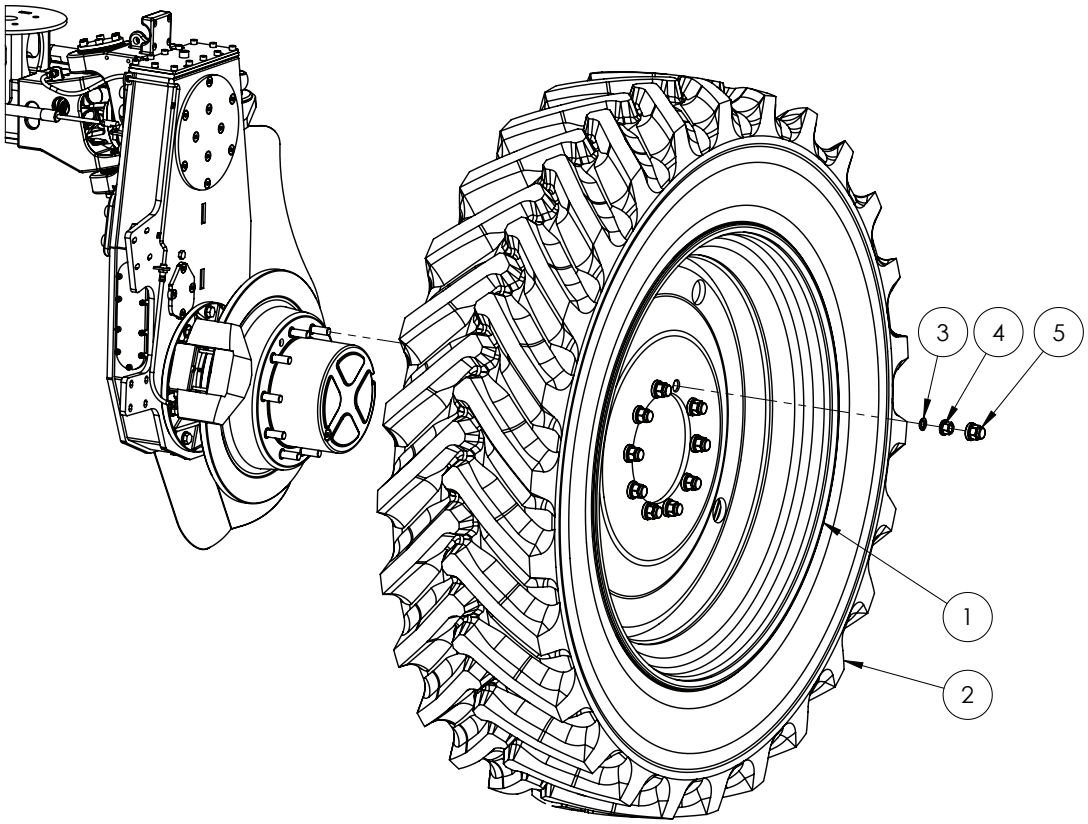

ITEM NO.	PART NUMBER	DESCRIPTION	QTY.
1	*	See 'Tyres and Rims' Section	2
2	*		2
3	GA4553180	Washer, Wheel Nut, 3/4", Tapered, G3 G4	20
4	GA0500012	Wheel Nut, 3/4" UNF, G3 G4	20
5	GA5071810	Wheel Nut Cover, suits 3/4" UNF Wheel Nut, Black Plastic	20

Rear Wheel Mounting

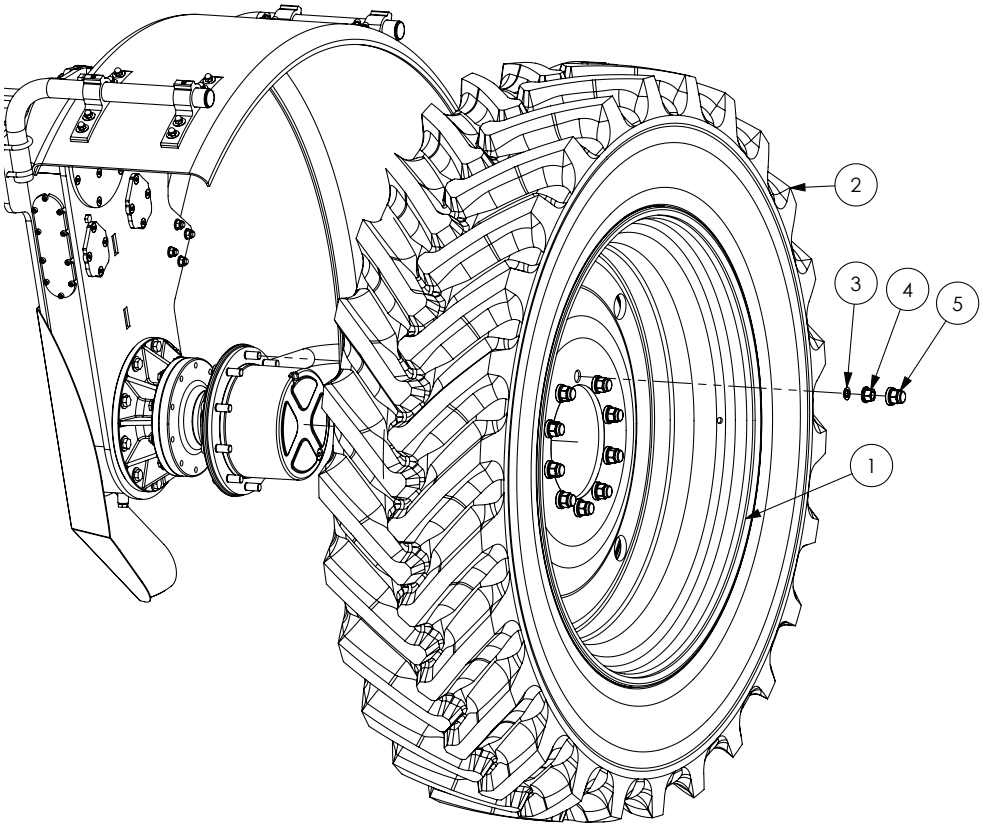

ITEM NO.	PART NUMBER	DESCRIPTION	QTY.
1	*	See 'Tyres and Rims' Section	2
2	*		2
3	GA4553180	Wheel Washer, Rear	20
4	GA0500012	Wheel Nut, 3/4" UNF, G3 G4 Rear	20
5	GA5071810	Wheel Nut Cover, suits 3/4" UNF Wheel Nut, Black Plastic	20

Tyres & Rims

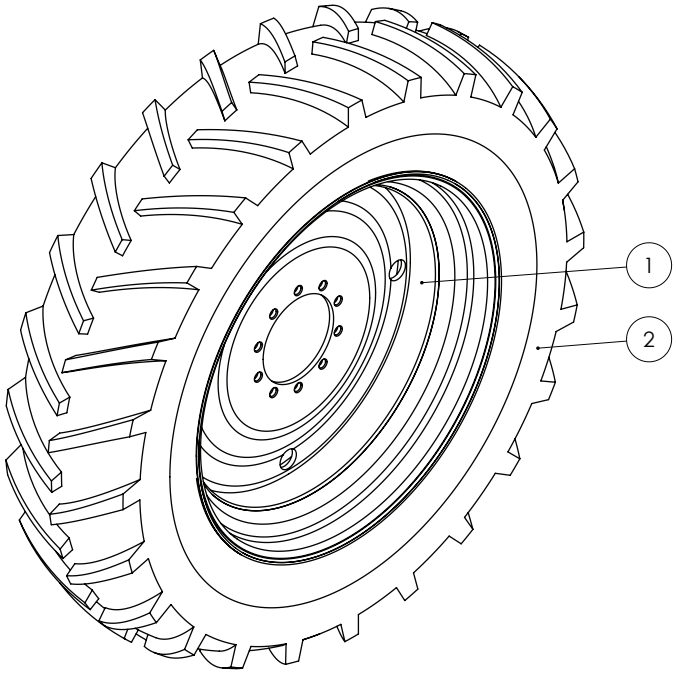

COMBO.	ITEM NO.	PART NUMBER	DESCRIPTION
A	1	GA5071285	Rim - DW13 x 46, 10 stud on 335 PCD, +52.5 mm offset
	2	GA5067025	Tyre - 380/90R R46 (14.9 R46 156 A8) - Harvest
B	1	GA1500004	Rim - DD16 x 46, 0mm Offset, 10 stud 335 PCD
	2	GA5066230	Tyre - 480/80 R46 (18.4 R46 158 A8) - Agrimax/Tanli/ Harvest
C	1	GA1500008	Rim - DD16 x 46, 10 stud on 335 PCD, - 20mm Offset
	2	GA1500024	Tyre - 520/85R46, X-Load 173A8/169D, Harvest
D	1	GA1500007	Rim - DW20 x 42, 10 stud on 335 PCD, - 65mm Offset
	2	GA1500002	Tyre - 620/70 R42, HR45 AT - Harvest

BOOM CENTRE

Paralift Arms & Paralift Rear

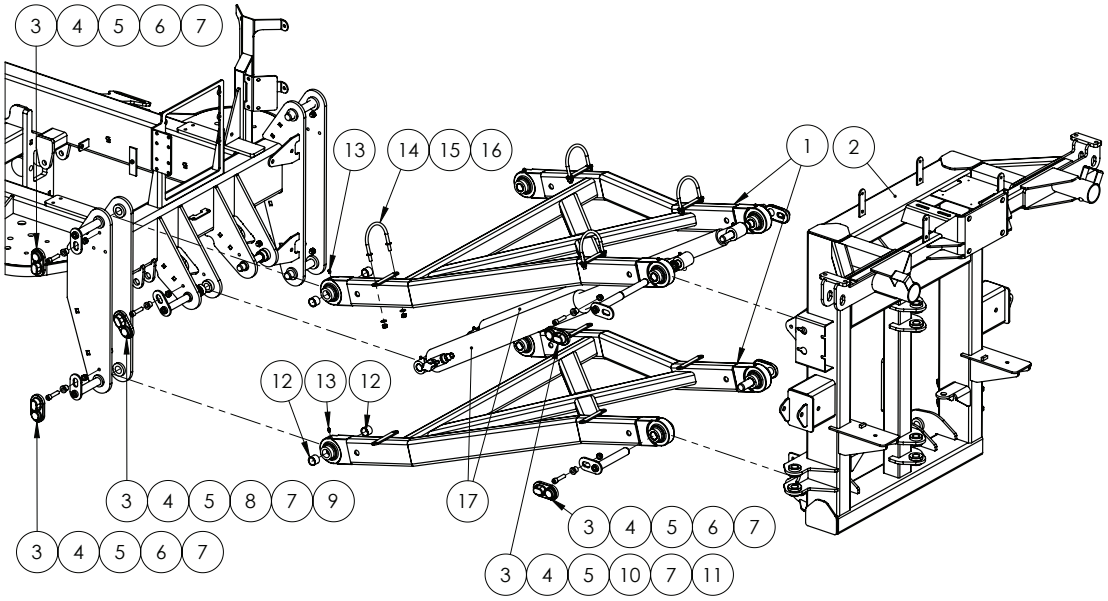

PARALIFT PIN KIT

PART NUMBER	DESCRIPTION
GA5066673	Pin kit suit paralift

NOTE: This kit requires GA5066645 to be cut down to make GA5066646 for fitment.

ITEM NO.	PART NUMBER	DESCRIPTION	QTY.
1	GA4658750	Paralift Arm	2
2	GA4658138	Paralift Rear, Tritech, 24m to 36m Boom	1
3	GA5067885	Pin cover, Black, clip on, plastic	10
4	GA5051470	SHCS M12 x 50 GR12.9 ZP	10
5	MACH0152	Bush w/shoulder, 12.3 ID x 25 OD x 21 mm long, Paralift pin bolts	10
6	GA5066655	Pin w/retaining plate, 28.575 OD x 180 mm long	6
7	GA5012461	Nut M12 Nyloc ZP	13
8	GA5066646	Pin with retainer, 1” OD x 180 long, Crop Cruiser lift arm base	2
9	GA4562190	Spacer bush, 40 OD x 26 ID x 17.5 mm long, Paralift arms	2
10	GA5066675	Pin w/retaining plate, Stepped, 294mm Long, Suit paralift ram & arm	2
11	GA4572135	Spacer bush, 40 OD x 25.8 ID x 9 mm thick, Paralift arm spacer	2
12	GA5065486	Glacier bush 1 1/8" x 1" long	16
13	GA5050450	Grease nipple 6mm	8
14	GA5070905	U bolt, Round top, M10 x 118 x 115mm, with stopper washers, ZP	4
15	GA5000117	Washer 10mm Flat SS HD	8
16	GA5000141	Nut M10 Nyloc ZP	5
17	GA5070081^	Hydraulic Cylinder, Bore 3”, Rod 2.5”, Stroke 26” , suit TriTech Boom	2

^ See Chapter 18 ‘Hydraulics’ for sub-assembly

Continued over page

Base Assembly - 30-36m

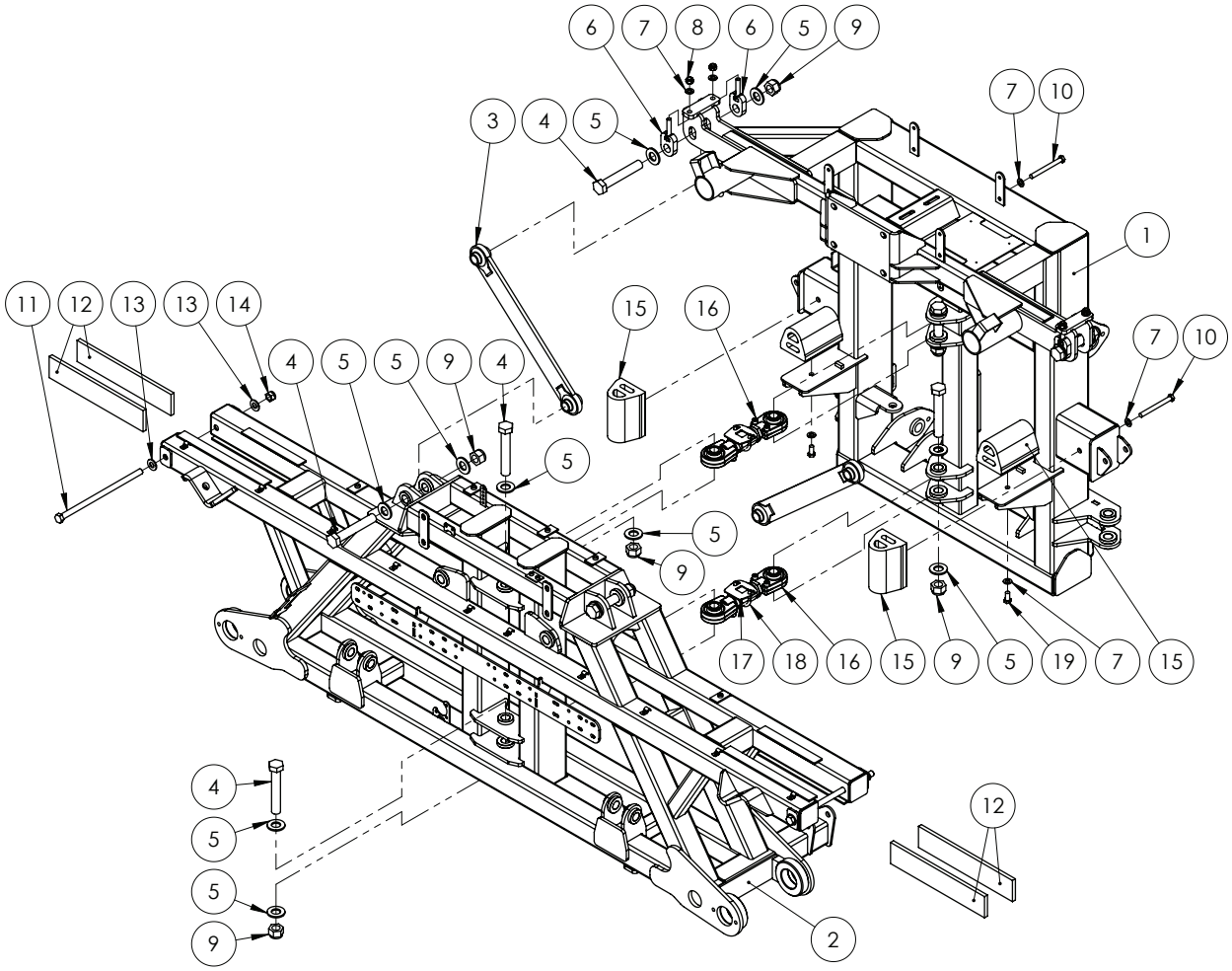

ITEM NO.	PART NUMBER	DESCRIPTION	QTY.
1	GA4658138	Paralift Rear, Tritech, 24m to 42m Boom	1
2	GA4658122	Centre Section, Tritech, 24m - 42m	1
3	GA4656240	Delta link, Long	2
4	GA4683145	Bolt 1” UNC x 6” cut down from 7”	8
5	GA5017681	Washer 1" x 2" 7g Flat Thin SS	16
6	GA4656260	Boom Delta hanger adjuster bolt	4
7	GA5000577	Washer 12mm Flat SS HD	8
8	GA5012461	Nut M12 Nyloc ZP	4
9	GA5012439	1" Nyloc Nut UNC ZP	8
10	GA5000265	Bolt M12 x 120 GR8.8 ZP	2
11	GA5075125	M16 x 325 GR4.4 ZP 60.mm Thread	2
12	GA5075090	Wear pad, 380 x 74 x 12 mm, Polystone, Suit Tri Tech tilt arm	4
13	GA5001009	Washer 16mm Flat ZP HD	4

Continued over page

Base Assembly - 30-36m

ITEM NO.	PART NUMBER	DESCRIPTION	QTY.
14	GA5012463	Nut M16 Nyloc SS	2
15	GA5075240	Bump Stop Rubber with threaded insert	4
16	DELTA-LINKSA*	Short Adjustable delta link	2
17	GA4524140	Locking plate suit adjustable delta link	2
18	GA5018245	U bolt, Round top, M8 x 50 x 60 mm	2
19	GA5011229	Bolt M12 x 25 GR8.8 ZP	2

* Sub-assembly on following pages

Tilt Assembly

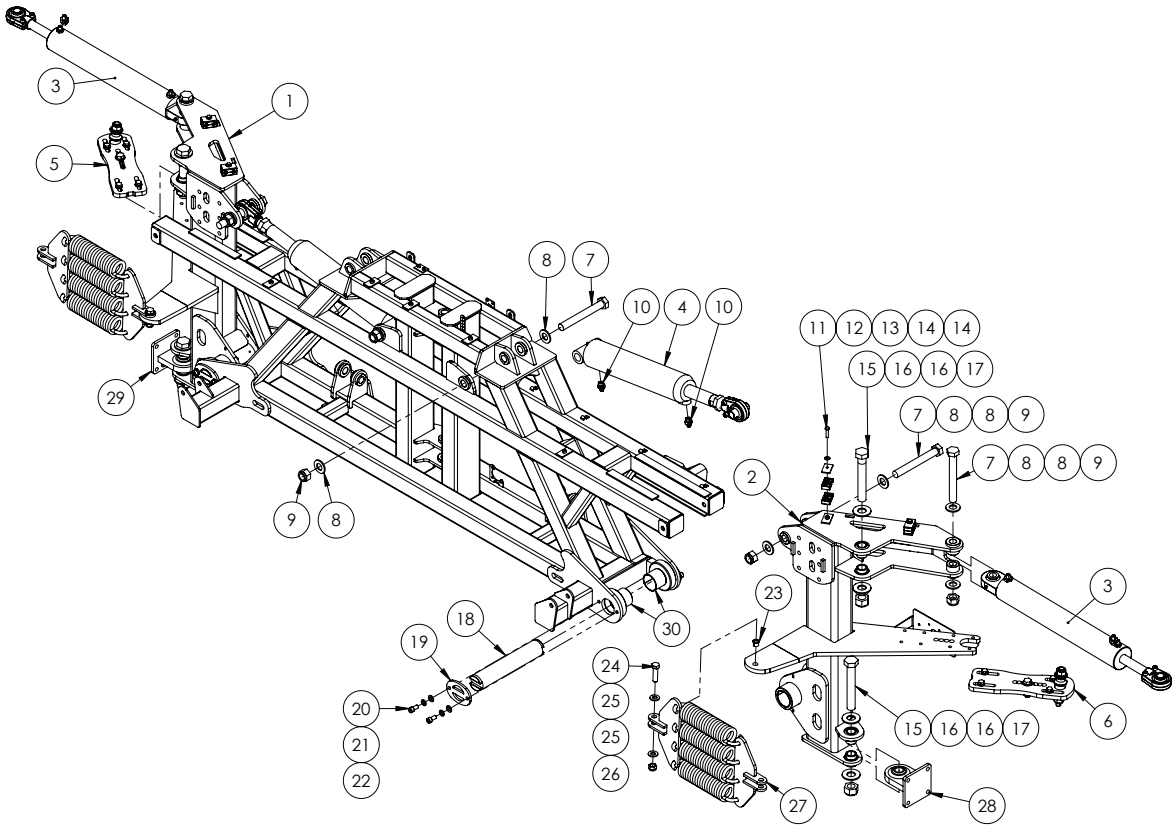

ITEM NO.	PART NUMBER	DESCRIPTION	QTY.
1	GA4660190	Tilt Arm Tritech 42m Dual Fold Cylinder RH inc. bushings	1
2	GA4660185	Tilt Arm Tritech 42m Dual Fold Cylinder LH inc. bushings	1
3	GA5018538^	Hydraulic Cylinder, Bore 3”, Rod 1.25”, Stroke 18”	2
4	GA5065051^	Hydraulic Cylinder, Bore 3.5”, Rod 1.75”, Stroke 5”	2
5	GA4922221*	Cable Mount Rear, Flat fold RH	1
6	GA4922226*	Cable Mount Rear, Flat fold LH	1
7	GA5006151	Bolt 1" UNF 12 TPI x 8 GR8 ZP	6
8	GA5017681	Washer 1" x 2" 7g Flat Thin SS	12
9	GA5012446	Nut, 1", UNF, 12 TPI, Nyloc ZP	6
10	GA3500147	Hydraulic adaptor, Nipple, 9/16” JIC male x 3/4” UN male O-ring	4
11	GA5011481	Bolt M8 x 35 GR8.8 ZP	4
12	GA5003643	Washer 8mm Flat SS HD	4
13	GA5078042	Mounting clamp, Double type, Plate, Top, Group 2	4
14	GA5078031	Mounting clamp, Double type, Jaw, Pair, Group 2, 14mm	8
15	GA0500053	Bolt, 1 1/8” x 7 1/2” UNC, ZP, Gr8	4
16	GA5017653	Washer 1 1/8” x 2 1/2” x 7g Flat SS	8
17	GA0500054	Nut 1 1/8”, Nyloc, ZP, UNC	4
18	GA4572365	Tilt pin suit wide centre	2
19	GA4502280	Pin retainer	4
20	GA5000297	SHCS M12 x 25 GR12.9 ZP	8

Continued over page

Tilt Assembly

ITEM NO.	PART NUMBER	DESCRIPTION	QTY.
21	GA5000575	Washer 12mm Spring SS	8
22	GA5000577	Washer 12mm Flat SS HD	8
23	GA5075220	Glacier bush flanged 16mm suit boom cable pivot	2
24	GA5000941	Bolt M16 x 60 GR8.8 ZP	2
25	GA5001009	Washer 16mm Flat ZP HD	4
26	GA5012463	Nut M16 Nyloc SS	2
27	GA4905665~	30-36m Cable damper assembly	2
28	GA4656201	Rose end, Bolt on, LH, Suit 24 - 36m boom	1
29	GA4656200	Rose end, Bolt on, RH, Suit 24 - 36m boom	1
30	GA5075060	Glacier bush 60mm ID 50mm long	4

* Sub-assembly on following pages

~ See Chapter 14 'Boom Wing' for sub-assembly

^ See Chapter 18 'Hydraulics' for sub-assembly

Yaw Assembly

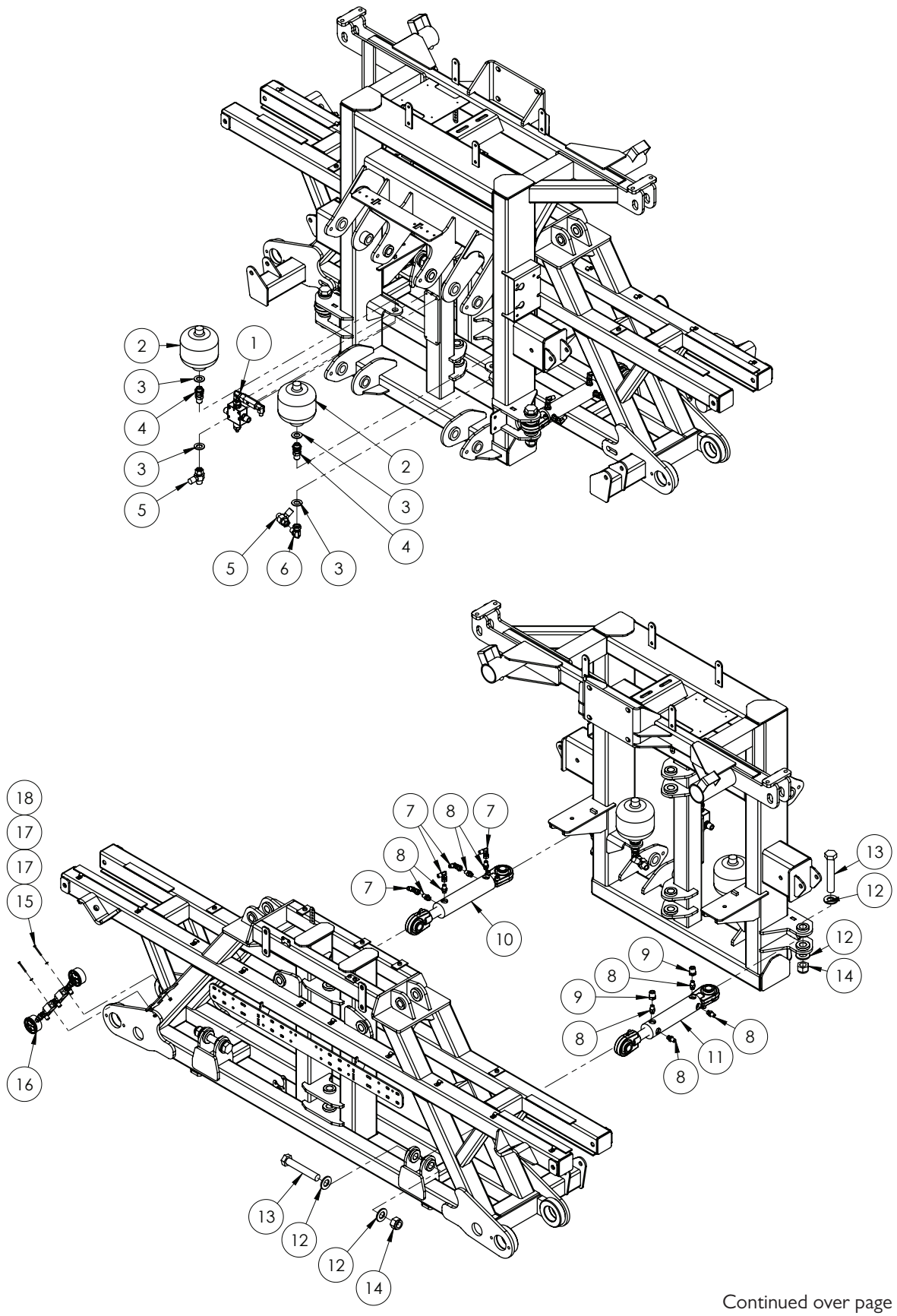

Continued over page

Yaw Assembly

ITEM NO.	PART NUMBER	DESCRIPTION	QTY.
1	^	Pressure Reducer Valve Assembly	1
2	GA5007787	Accumulator, Hydraulic, 1L, precharged to 70 bar	2
3	GA5001741	Washer 20mm Flat SS HD	4
4	GAS99-603	Hydraulic adaptor, Bulkhead nipple, 1/2 BSP male x 1/2 BSP male	2
5	GA3500198	Hydraulic adaptor, Inline test point, 1/2” BSPP female swivel x 1/2” BSPT male x M16 x 2.0 test port	2
6	GA3500333	Hydraulic adaptor, Elbow, 90 degree, 1/2” BSPT male x 1/2” BSPP female swivel	1
7	GA3500332	Hydraulic adaptor, Elbow, 90 degree, 1/4” BSPT male x 1/4” BSPP female swivel	4
8	GA3500358	Hydraulic adaptor, Nipple, 1/4” BSPT male x 9/16” UN male O-ring	8
9	GA3500203	Hydraulic adaptor, Reducing bush, 1/2” BSPT male x 1/4” BSPT female	2
10	^	Hydraulic Cylinder - Yaw Left side	1
11	^	Hydraulic Cylinder - Yaw Right side	1
12	GA5017681	Washer 1" x 2" 7g Flat Thin SS	8
13	GA4683145	Bolt 1” UNC x 6” cut down from 7”	4
14	GA5012439	1" Nyloc Nut UNC ZP	4
15	GA5049800	SHCS M4 x 40 GR12.9 ZP	2
16	^	Yaw Control Valve Assembly	1
17	GA5011361	Washer 4mm Flat ZP	4
18	GA5049025	Nut M4 Nyloc SS	2

^ See Chapter 18 ‘Hydraulics’ for sub-assembly

Flow Dividers & Check Valves

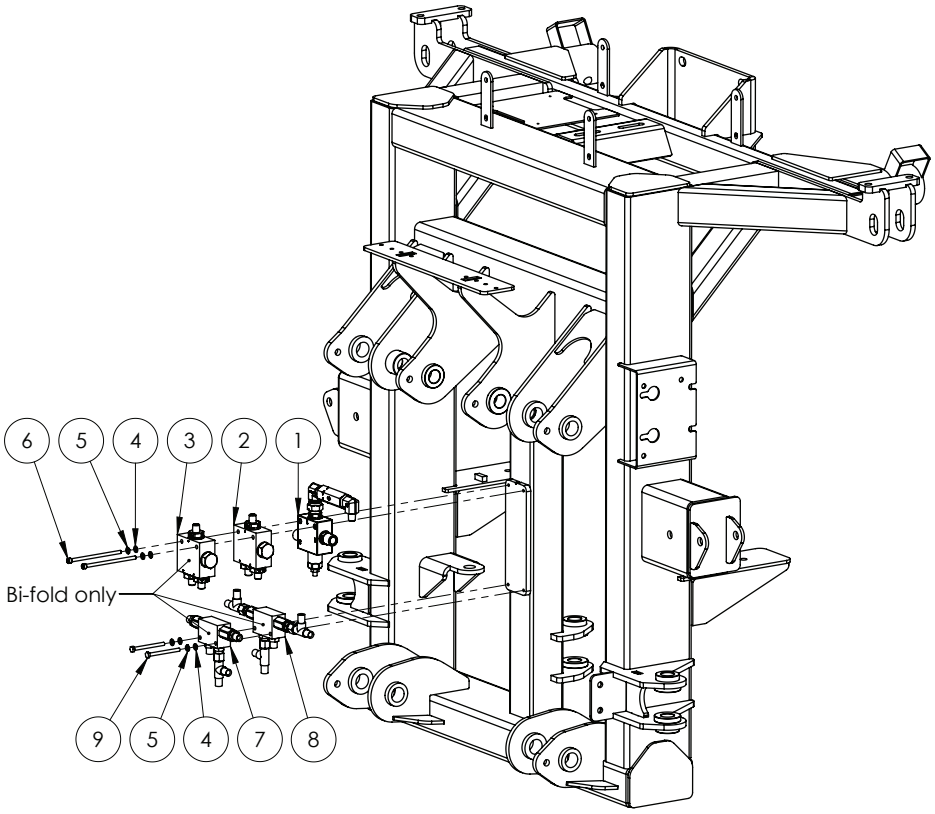

ITEM NO.	PART NUMBER	DESCRIPTION	QTY.
1	^	Pressure Reducing Valve Assembly	1
2	^	Flow Divider Assembly - Fold Cylinders	1
3	^	Flow Divider Assembly - Bi-fold Cylinders	1
4	GA5004437	Washer 6mm Flat SS	4
5	GA5004447	Washer 6mm Spring SS	4
6	GA5011441	SHCS M6 x 80 GR12.9 ZP - standard	2
	GA5051525	SHCS M6 x 130 GR12.9 ZP - Bi-fold only - Cut to 115 mm	2
7	^	Double Pilot Check Valve - Bi-fold Cylinders	1
8	^	Double Pilot Check Valve - Bi-fold Cylinders	1
9	GA5004107	Bolt M6 x 70 GR8.8 ZP	2

^ See Chapter 18 'Hydraulics' for sub-assembly

Centre Level

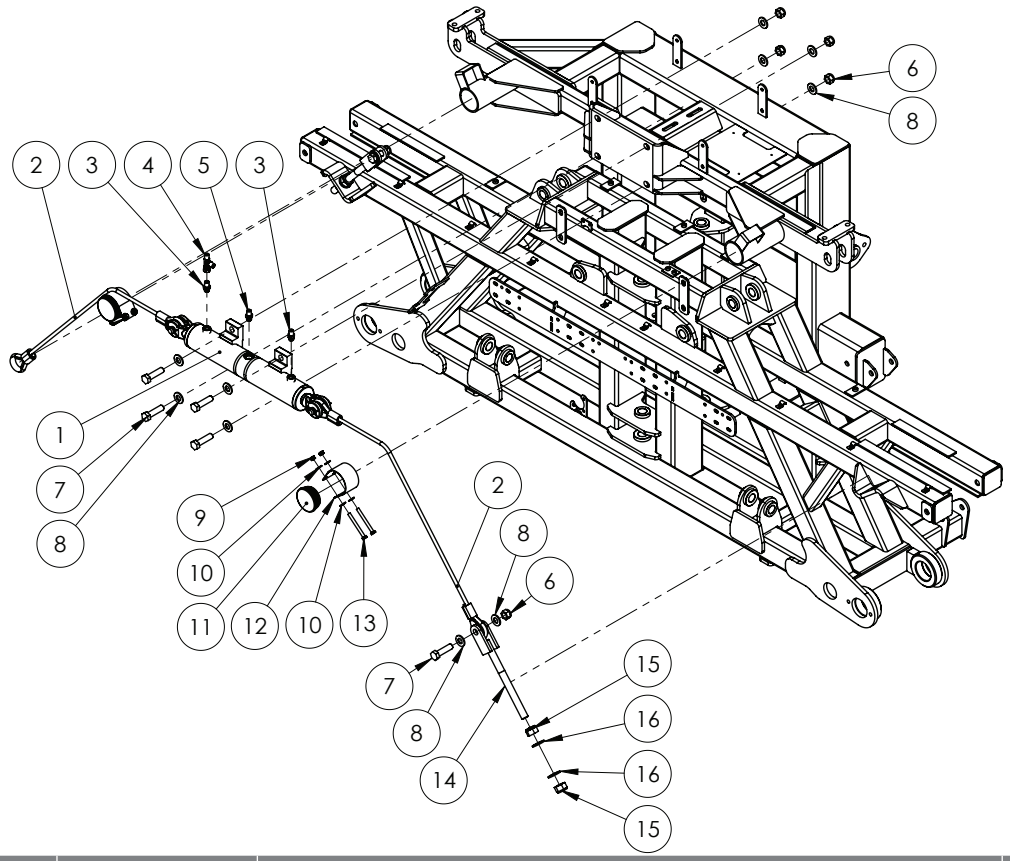

ITEM NO.	PART NUMBER	DESCRIPTION	QTY.
1	GA3500477^	Hydraulic Cylinder, Bore 2.5”, Rod 1”, Stroke 110mm, Back to Back	1
2	GA1100037	Centre Lock Cable Kit	2
3	GA3500358	Hydraulic adaptor, Nipple, 1/4” BSPT male x 9/16” UN male O-ring	2
4	GA3500199	Hydraulic adaptor, Tee, 1/4” BSPT male x 1/4” BSPT male x 1/4” BSPP female	1
5	GA3500359	Hydraulic adaptor, Nipple, 1/4” BSPT male x 3/4” UN male O-ring	1
6	GA5001029	Nut M16 Nyloc ZP	6
7	GA5000941	Bolt M16 x 60 GR8.8 ZP	6
8	GA5001009	Washer 16mm Flat ZP HD	12
9	GA5052590	Nut M8 Nyloc SS	4
10	GA5003643	Washer 8mm Flat ZP HD	8
11	GA5050355	End cap, 76.1 mm round, suit 65 NB pipe, Black plastic	2
12	GA4506750	Wear Strip SS for Centre Leveling Cables	2
13	GA5022480	Bolt M8 x 100 SS A2-70	4
14	GA5020320	Cable Adjuster, threaded, M20	2
15	GA5048125	Nut M20 Nyloc Coarse ZP	4
16	GA5001741	Washer 20mm Flat SS HD	4

^ See Chapter 18 ‘Hydraulics’ for sub-assembly

Cable Mount Rear

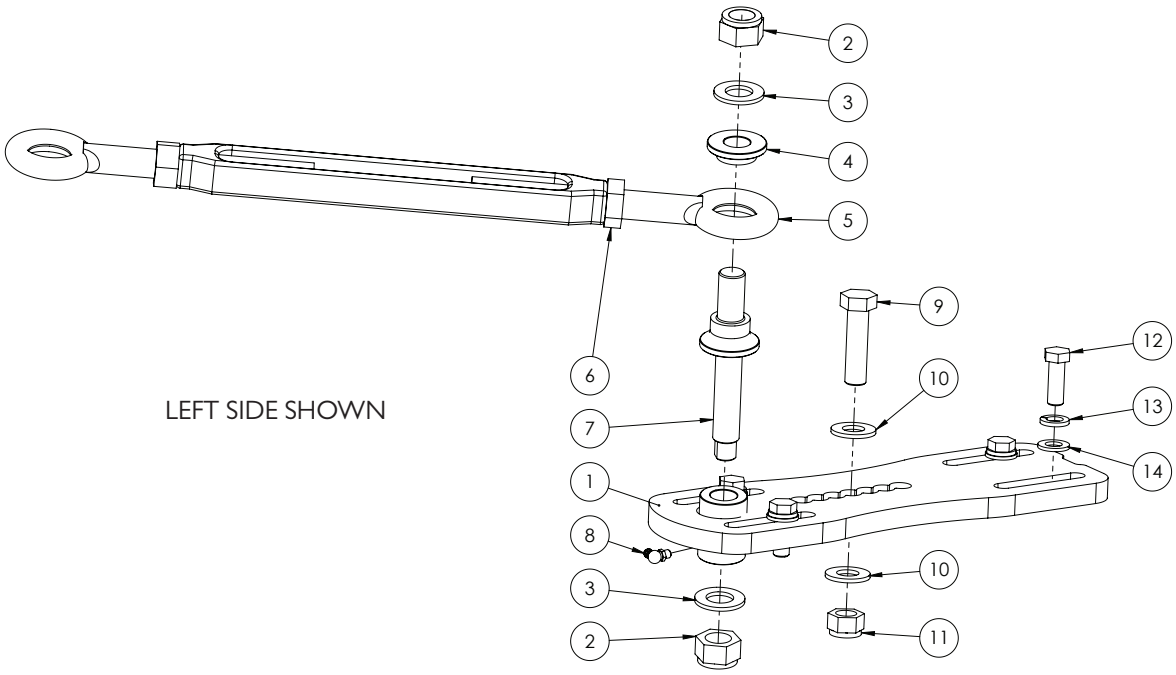

Quantities shown are per side.

ITEM NO.	PART NUMBER	DESCRIPTION	QTY.
1	GA4656256	Boom cable tension adjust flat SP LH	1
	GA4656251	Boom cable tension adjust flat SP RH	
2	GA5048125	Nut M20 Nyloc Coarse ZP	2
3	GA5001741	Washer 20mm Flat SS HD	2
4	GA4572515	Boom cable retainer, Pivot pin	1
5	GA5017061	Turnbuckle, Eye ends, M22 thread & lock nut, Galvanised	1
6	GA5070430	Nut M22 Lock Nut ZP LH Thread	1
7	GA4572510	Pivot pin, Boom cable	1
8	GA5009637	Grease nipple, Elbow, 90 degree, 1/4" UNF male	1
9	GA5000941	Bolt M16 x 60 GR8.8 ZP	1
10	GA5001043	Washer 16mm Flat SS HD	2
11	GA5001029	Nut M16 Nyloc ZP	1
12	GA5000311	Set Screw M12 x 35 GR 8.8 ZP	4
13	GA5000575	Washer 12mm Spring SS	4
14	GA5000577	Washer 12mm Flat SS HD	4

Oversize Sign Mount

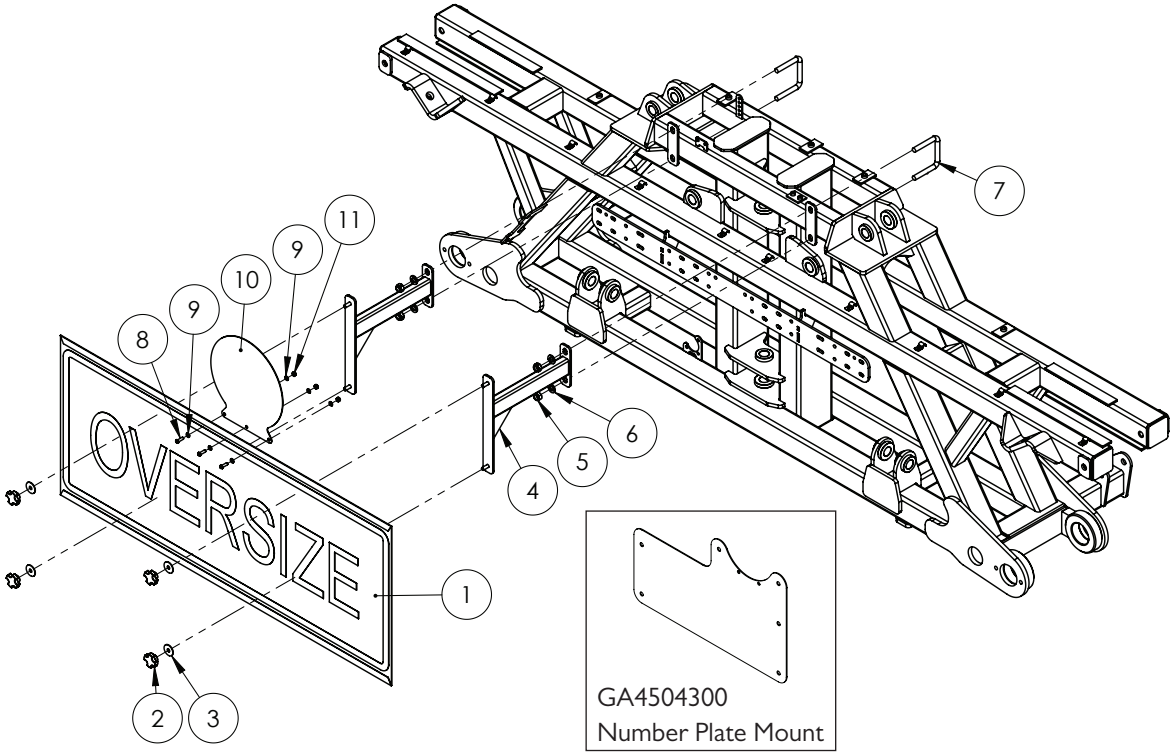

ITEM NO.	PART NUMBER	DESCRIPTION	QTY.
1	GA5009613	Oversize sign, Yellow, Reflective with folded edges	1
2	GA5069875	Knob, Star grip nut M8 x 40 diameter	4
3	GA5003645	Washer 5/16 ID x 1 1/4 OD Flat SS	4
4	GA4658150	Bracket, Oversize sign mount arm, Bolt on	2
5	GA5012461	Nut M12 Nyloc ZP	4
6	GA5000577	Washer 12mm Flat SS HD	4
7	GA5075160	U bolt, Square top M12 x 76 x 80	2
8	GA5004053	BHCS M6 x 20 SS A2-70	3
9	GA5004437	Washer 6mm Flat SS	6
10	F70906A	Plate, Maximum road Speed warning sticker	1
11	GA5004429	Nut M6 Nyloc SS	3

Double Roll Shocker Assembly

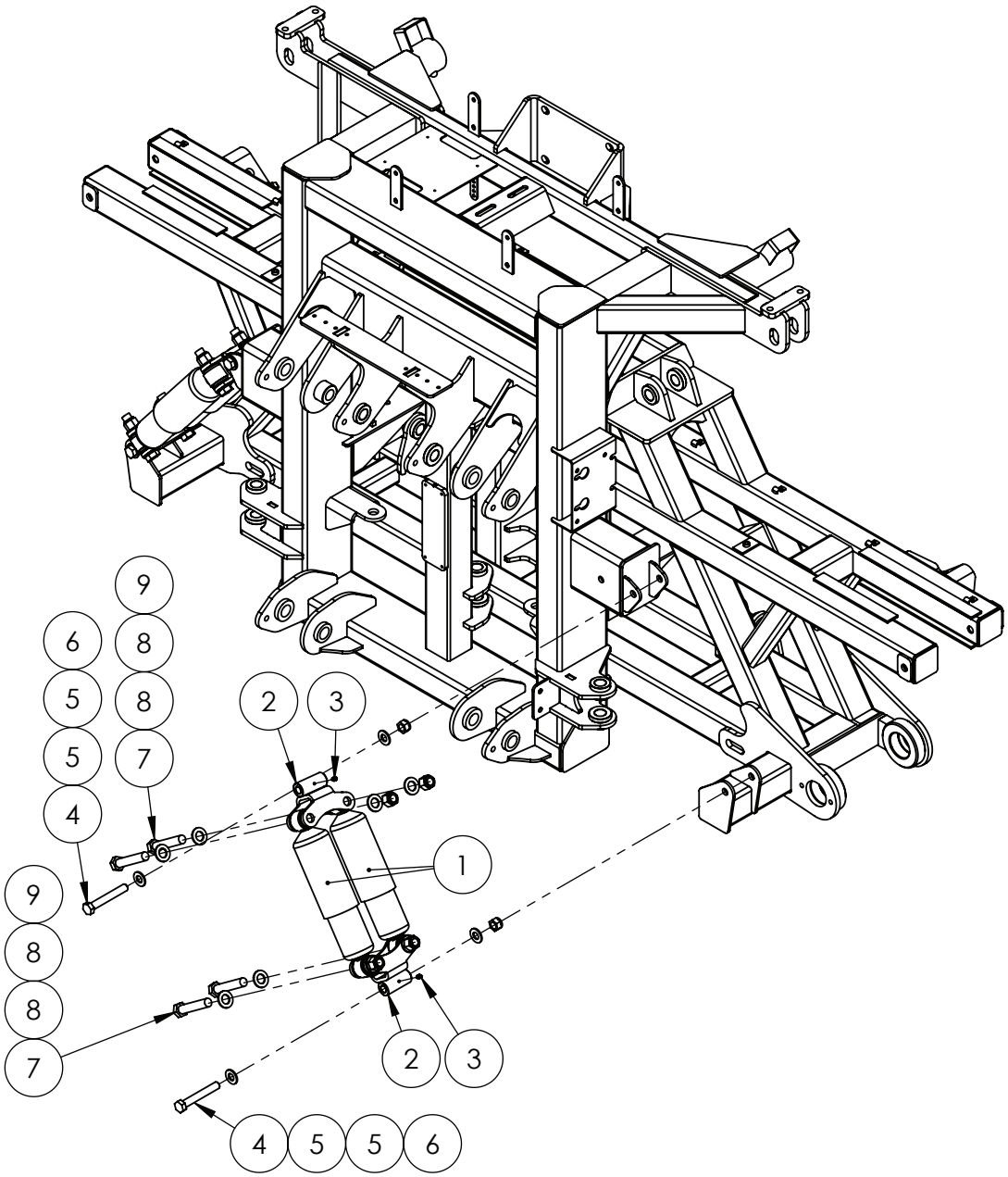

ITEM NO.	PART NUMBER	DESCRIPTION	QTY.
1	GA5015139	Shock Absorber, Double eye, 19mm eye, 82mm OD, Black	4
2	GA4659360	Mounting bracket, Dual roll shock absorber	4
3	GA5012203	Grease nipple, Short, 1/4" UNF	4
4	GA5000855	Bolt M16 x 110 GR8.8 ZP	4
5	GA5001009	Washer 16mm Flat ZP HD	8
6	GA5012463	Nut M16 Nyloc SS	4
7	GA5049490	Bolt 3/4" UNC x 4" HT ZP	8
8	GA5001741	Washer 20mm Flat SS HD	16
9	GA5048430	Nut 3/4" UNC Nyloc ZP	8

Delta Link

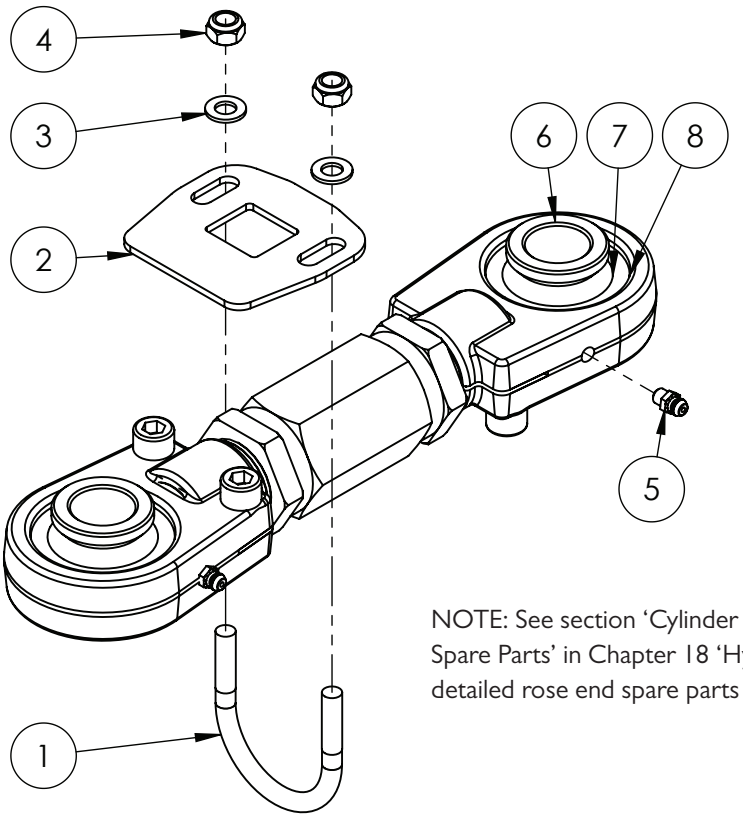

NOTE: See section 'Cylinder Rose End - Spare Parts' in Chapter 18 'Hydraulics' for detailed rose end spare parts availability.

ITEM NO.	PART NUMBER	DESCRIPTION	QTY.
-	DELTA-LINKSA	Delta link, short, heavy duty, adjustable - Locking plate not included	-
1	GA4524140	Locking plate, suit adjustable delta link SS	1
2	GA5018245	U bolt, Round top, M8 x 50 x 60mm	1
3	GA5052590	Nut M8 Nyloc SS	2
4	GA5003643	Washer 8mm Flat SS HD	2
5	GA5012203	Grease nipple, Short, 1/4" UNF	2
6	GA5021925	Small bearing bush, Suit screw on rose end	4
7	GA5067605	Bearing, suit screw on rose end	2
8	GA5067610	Circlip, suit bearing screw on rose end	2

Lower Limit Switch - Raven

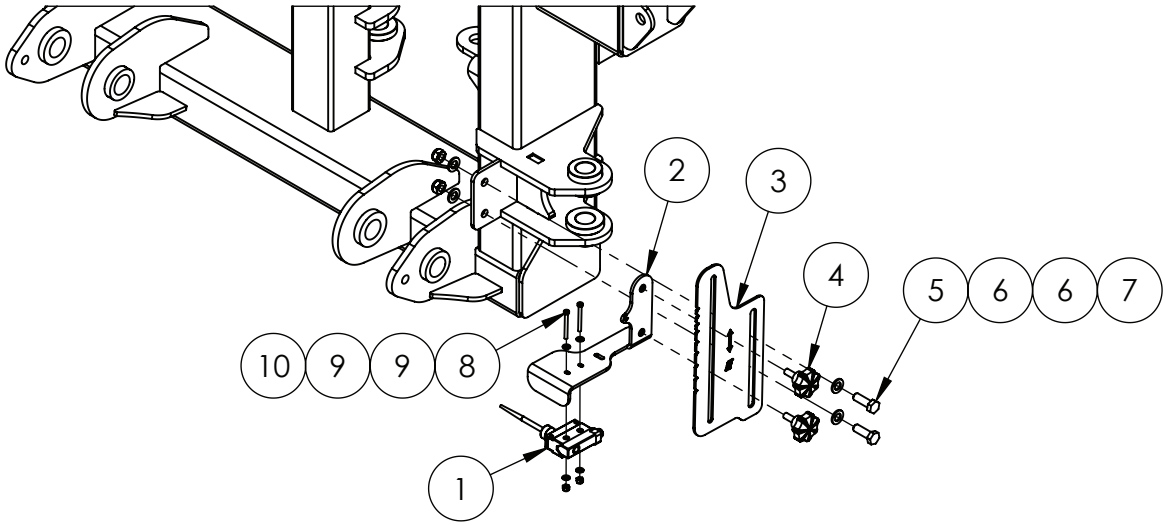

ITEM NO.	PART NUMBER	DESCRIPTION	QTY.
1	GA5012129	Limit switch, Flexible arm, Micro, IP65, 10 Amp	1
2	GA4654161	Bracket mount Paralift Switch	1
3	GA4523965	Boom Height Adjustment Bracket	1
4	GA5067080	Knob Bolt M8 x 20	2
5	GA5065455	Bolt M10 x 30 GR8.8 ZP	2
6	GA5000117	Washer 10mm Flat SS HD	4
7	GA5051445	Nut M10 Nyloc SS	2
8	GA5049800	SHCS M4 x 40 GR12.9 ZP	2
9	GA5011361	Washer 4mm Flat SS	4
10	GA5049025	Nut M4 Nyloc SS	2

Manual Grease Station

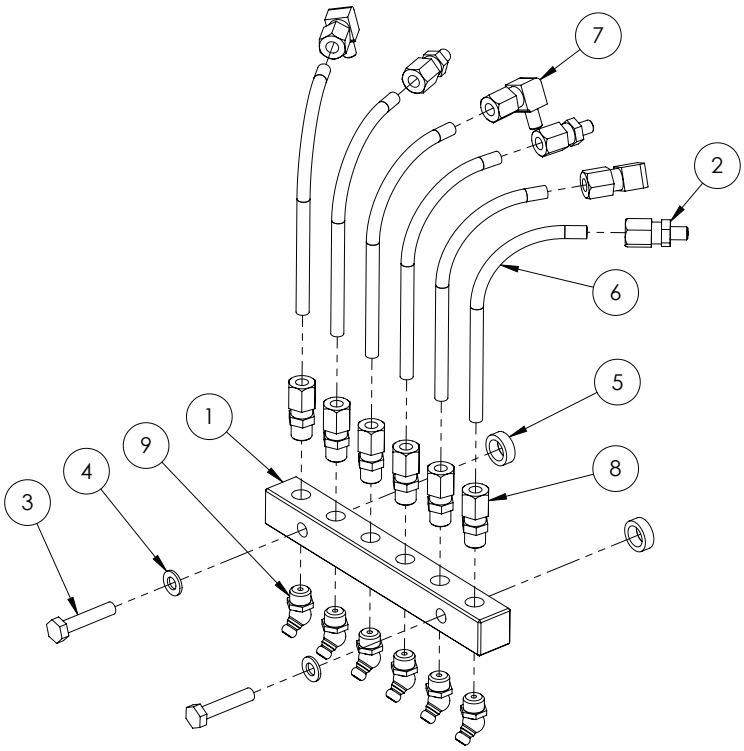

ITEM NO.	PART NUMBER	DESCRIPTION	QTY.
1	GA5070000	Grease Fitting Header Block	1
2	GA5069985	Grease fitting, Line connector, Straight 6mm	3
3	GA5004079	Set Screw M6 x 30 ZP GR8.8	2
4	GA5004437	Washer 6mm Flat SS	2
5	GA4552080	Crush tube, 10.2 ID x 15 OD x 5mm long	2
6	GA5070005	Grease line 6mm pre filled	6
7	GA5069995	Grease fitting, Elbow 90 degree, Line connector 6mm	3
8	GA5055225	Pneumatic fitting, Straight adaptor, 1/8” BSP male thread x Nut retainer suit 6mm tube	6
9	GA5055125	Grease Nipple 45 degree 1/8” gas thread ZP	6

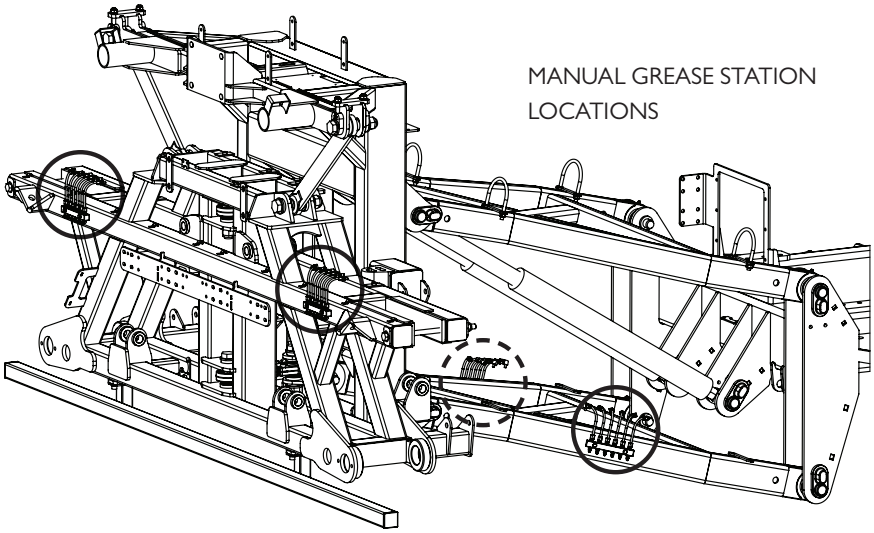

RapidFire Components

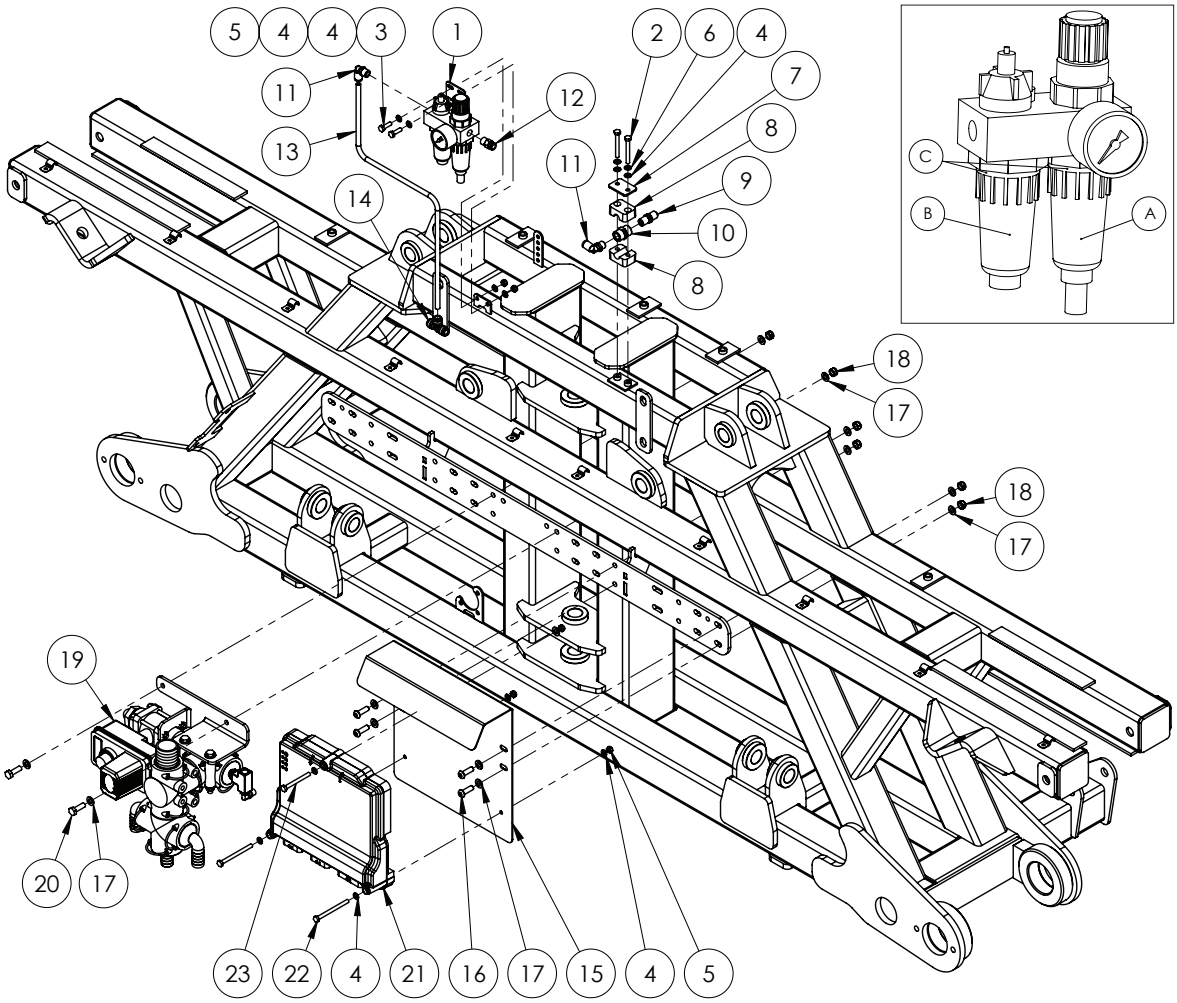

ITEM NO.	PART NUMBER	DESCRIPTION	QTY.
A	GA5054620	Bowl, suit air dryer / oiler GA5068806	1
B	GA5054625	Bowl Lubricator, suit air dryer / oiler GA5068806	1
C	GA5071805	O-Ring Seal, 33x2mm, Suits GA5068806 Pneumatic Air Line Oiler Reservoir	-
1	GA5068806	Pneumatic, air, Mini Filter Oiler and Regulator, 1/4” BSP	1
2	GA5004091	Bolt M6 x 50 GR8.8 ZP	2
3	GA5004065	Bolt M6 x 20 GR8.8 ZP	2
4	GA5004437	Washer 6mm Flat SS	11
5	GA5048115	Nut M6 Nyloc ZP	5
6	GA5004447	Washer 6mm Spring SS	2
7	GA5078068	Mounting clamp, Single type, Plate, Top, Group 2	1
8	GA5078058	Mounting clamp, Single type, Jaw, Pair, Group 3, 14mm	2

Continued over page

RapidFire Components

ITEM NO.	PART NUMBER	DESCRIPTION	QTY.
9	GA3500218	Hydraulic adaptor, Nipple, 1/4” BSPT male x 1/4” BSPT male	1
10	GA3500211	Hydraulic adaptor, Socket, 1/4” BSPT female x 1/4” BSPT female	1
11	GA5052690	Pneumatic fitting, Elbow, 90 degree, 1/4 BSP male x 8mm push type, Metal	2
12	GA5052695	Straight Adaptor, Push in, 8mm x 1/4" BSP	1
13	GA5004382	Tube, Nylon, 8mm, Black	1
14	GA5067010	Equal Tee push in 8mm	1
15	GA4404570	Plate, Mount, RCM Node	1
16	GA5011473	BHCS M8 x 25 SS A2-70	4
17	GA5003643	Washer 8mm Flat SS HD	13
18	GA5052590	Nut M8 Nyloc SS	6
19	*	Flow Distributer & Boom Recirculation Valve Assembly	1
20	GA5004711	Bolt M8 x 25 GR8.8 ZP	2
21	GA3000202	ISO Node, Rate control module, RCM, Goldacres, Raven	1
22	GA5011437	Bolt M6 x 75 ZP GR8.8	2
23	GA5004097	Bolt M6 x 60 GR8.8 ZP	1

* See Chapter 19 ‘Plumbing’ for sub-assembly.

Spray Bar

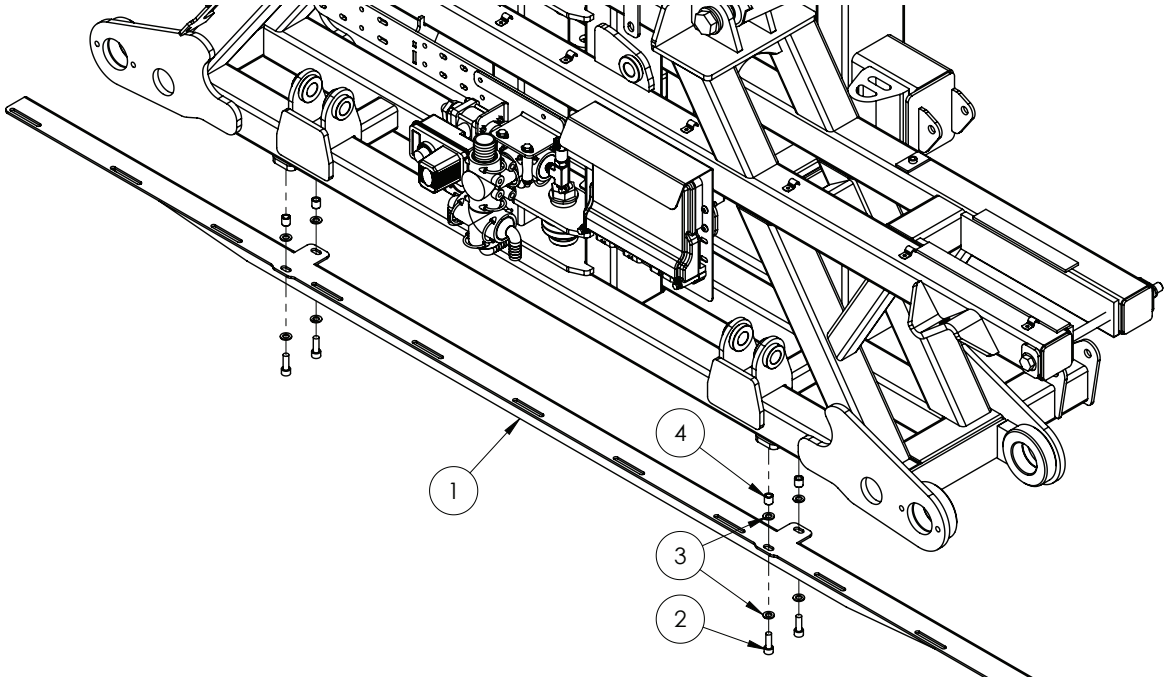

ITEM NO.	PART NUMBER	DESCRIPTION	QTY.
1	GA4404885	Plate, Spray Bar, Aluminium, Tritech	1
2	GA5006129	SHCS M10 x 30 GR12.9 ZP	4
3	GA5000117	Washer 10mm Flat SS HD	8
4	GA4552075	Crush tube, 10.2 ID x 15 OD x 15 mm long	4

Norac System

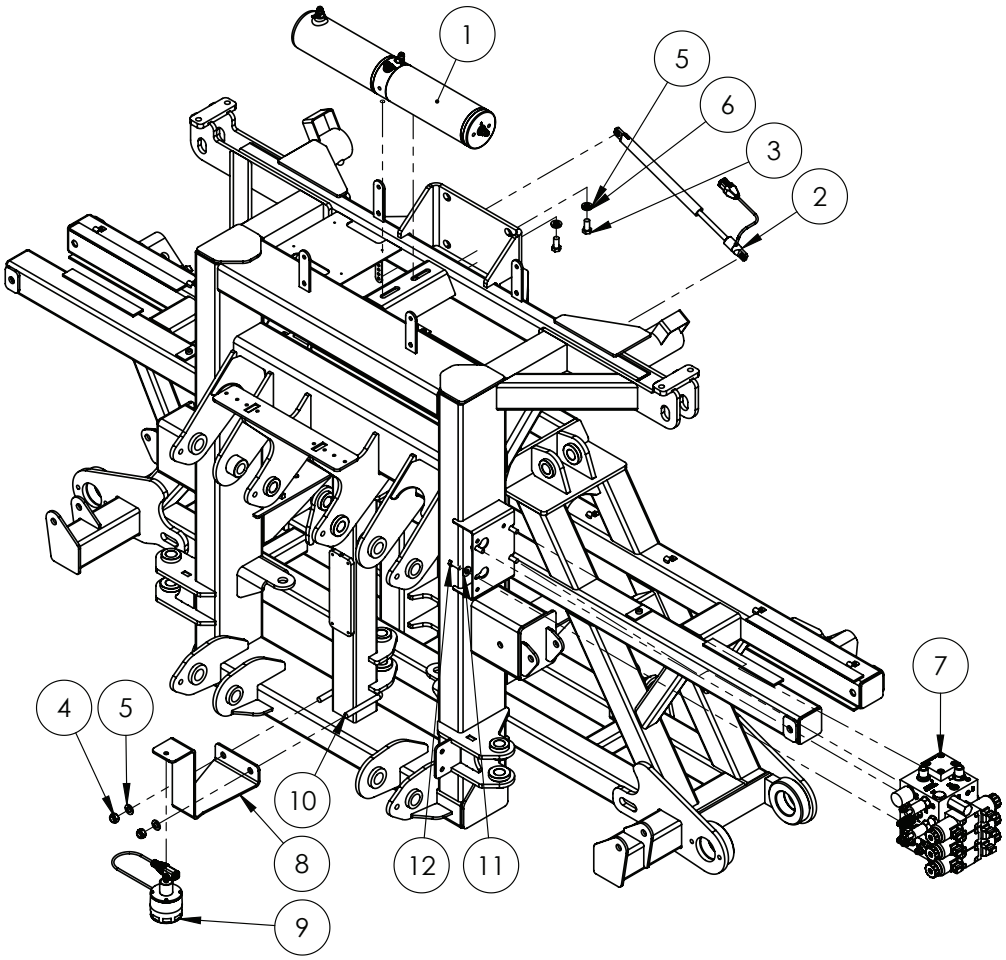

ITEM NO.	PART NUMBER	DESCRIPTION	QTY.
1	GA3500136	Hydraulic cylinder, Wing roll with position sensor, Norac	1
	GA3500146	Hydraulic adaptor, Nipple, 9/16” JIC male x 9/16” UN male O-ring	4
2	GA3000127	Sensor, Linear position NF, UC5, Norac	1
3	GA5011229	Bolt M12 x 25 GR8.8 ZP	2
4	GA5012461	Nut M12 Nyloc ZP	2
5	GA5000577	Washer 12mm Flat SS HD	4
6	GA5000575	Washer 12mm Spring SS	2
7	^	Norac Valve Block	1
8	GA4510595	Plate, Mount, Norac Ultrasonic Sensor, Centre Section	1
9	GA3000128	Ultrasonic sensor, UC5, Norac	1
10	GA5011259	U Bolt Square top M12 x 76mm x 110mm	1
11	GA5017623	Washer 3/8 Flat ZP HD	4
12	GA5002601	Bolt 3/8 UNC x 1 GR8 ZP Yellow	4

^ See Chapter 18 ‘Hydraulics’ for sub-assembly.

Norac Spare Parts List

ITEM NO.	PART NUMBER	DESCRIPTION
1	GA3000110	Console, UC5 Pulse, Display panel, screen, Norac
2	GA3000111	Controller module, UC5 Input pass through, Norac
3	GA3000112	Controller module, UC5 Valve, Norac
4	GA3000113	Controller module, UC5, CAN Bus, Norac
5	GA3000114	Electrical Harness, UC5 Battery feed fused, Norac
6	GA3000115	Electrical Harness, UC5 Main CAN Interface, ISO bus 4 pin DT
7	GA3000116	Electrical Harness, UC5 Network, 1M, 14 AWG, Norac
8	GA3000117	Electrical Harness, UC5 Network, 10M, 14 AWG, Norac
9	GA3000118	Electrical Harness, UC5 Network, 10M, 18 AWG, Norac
10	GA3000119	Electrical Harness, UC5 Network, 20M, 18 AWG, Norac
11	GA3000120	Electrical Harness, UC5 Valve 2 pin DT, Norac
12	GA3000121	Electrical Harness, UC5, Main Interface Goldacres, Norac
13	GA3000122	Electrical Harness, UC5, Tilt Interface Goldacres, Norac
14	GA3000123	Network Coupler, UC5, 2 way, Black, Norac
15	GA3000124	Network Coupler, UC5, 2 way, white, terminator, Norac
16	GA3000125	Network Coupler, UC5, 3 way, Norac
17	GA3000126	Network Coupler, UC5, 8 way, Norac
18	GA3000127	Sensor, Linear position NF, UC5, Norac
19	GA3000128	Ultrasonic sensor, UC5, Norac
20	GA3000129	Connector, Plug, UC5 Network, 6 Pin, Norac
21	GA3000130	Connector, Plug, UC5 Network, 2 Pin, Norac
22	GA3000131	Connector, Plug, UC5 Network, 12 Pin, Norac
23	GA3500136	Hydraulic cylinder, Wing roll with position sensor, Norac
24	GA3500137	Hydraulic fitting kit, 12 parts, GN1, Norac
25	GA3500138	Valve block, 2 station assembly, Open centre LS Proportional, DT 4 Bolt
26	GA3500139	Valve block, expansion assembly, DPOC PROP DT 4 bolt, Norac
27	GA8700392	Manual, Installation UC5 AND UC4.5 Severe terrain option, Norac
28	GA8700393	Manual, Installation, UC5 Goldacres active wing roll upgrade Norac
29	GA8700394	Manual, installation, UC5 Goldacres active wing roll, Norac
30	GA8700395	Manual, installation, UC5 Goldacres passive roll, Norac
31	GA8700396	Manual, UC5 operators, Norac
32	GA8700397	Manual, UC5 Pulse display kit Self Propelled, Norac
33	GA5075480	Bracket, Linear position sensor mount, Norac
34	GA5075485	Mounting bracket, main lift sensor UC4 Plus, Norac
35	GA5075490	Mounting bracket, suit ultra sonic sensor, low profile, Norac
36	GA5075495	Spacer, 2" square tubing 8" long, Black, Norac
37	GA4510595	Plate, Mount, Norac Ultrasonic Sensor, Centre Section
38	GA5011259	U Bolt Square top M12 x 76mm x 110mm
39	GA3500363	Hydraulic adapter, Nipple, 1/2” BSPT male x 3/4” UN male O-ring
40	GA3500146	Hydraulic adaptor, Nipple, 9/16” JIC male x 9/16” UN male O-ring

Continued over page

Norac Spare Parts List

ITEM NO.	PART NUMBER	DESCRIPTION
41	GA3500144	Hydraulic adaptor, Tee, 9/16” JIC male x 9/16” JIC male x 9/16” JIC female swivel
42	GA3500145	Hydraulic adaptor, Nipple, 3/8” BSPP male x 9/16” JIC male
43	GA3500147	Hydraulic adaptor, Nipple, 9/16” JIC male x 3/4” UN male O-ring
44	GA3500200	Hydraulic adaptor, Tee, 1/2” BSPT male x 1/2” BSPT male x 1/2” BSPP female swivel

Chapter 14

BOOM WING

Boom Pivots - 24-36m

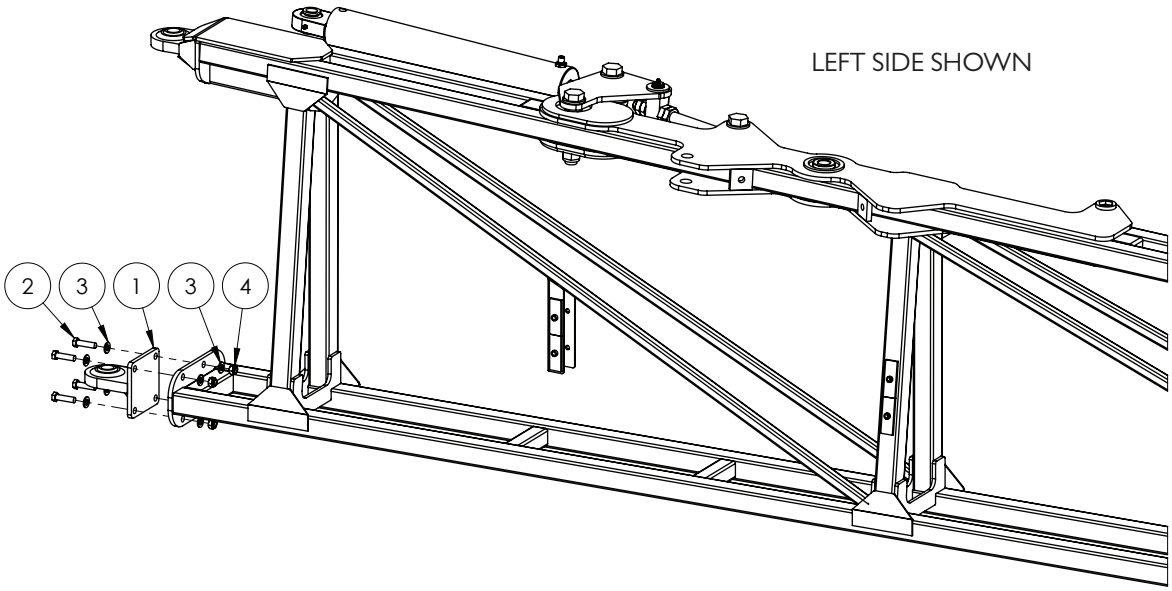

Quantities shown are per side.

ITEM NO.	PART NUMBER	DESCRIPTION	QTY.
-	GA4535285*	Shim, 1mm, Lower rose end	-
	GA4535355*	Shim, 3mm, Lower rose end	
	GA4535360*	Shim, 5mm, Lower rose end	
1	GA4656200	Rose end, Bolt on, RH, Suit 24 - 36m boom	1
	GA4656201	Rose end, Bolt on, LH, Suit 24 - 36m boom	
2	GA5000327	Set Screw M12 x 45 GR8.8 ZP	4
3	GA5000577	Washer 12mm Flat SS HD	8
4	GA5012461	Nut M12 Nyloc ZP	4

* NOTE: Quantity will vary depending on adjustments needed.

Boom Fold Adjuster - 24-36m

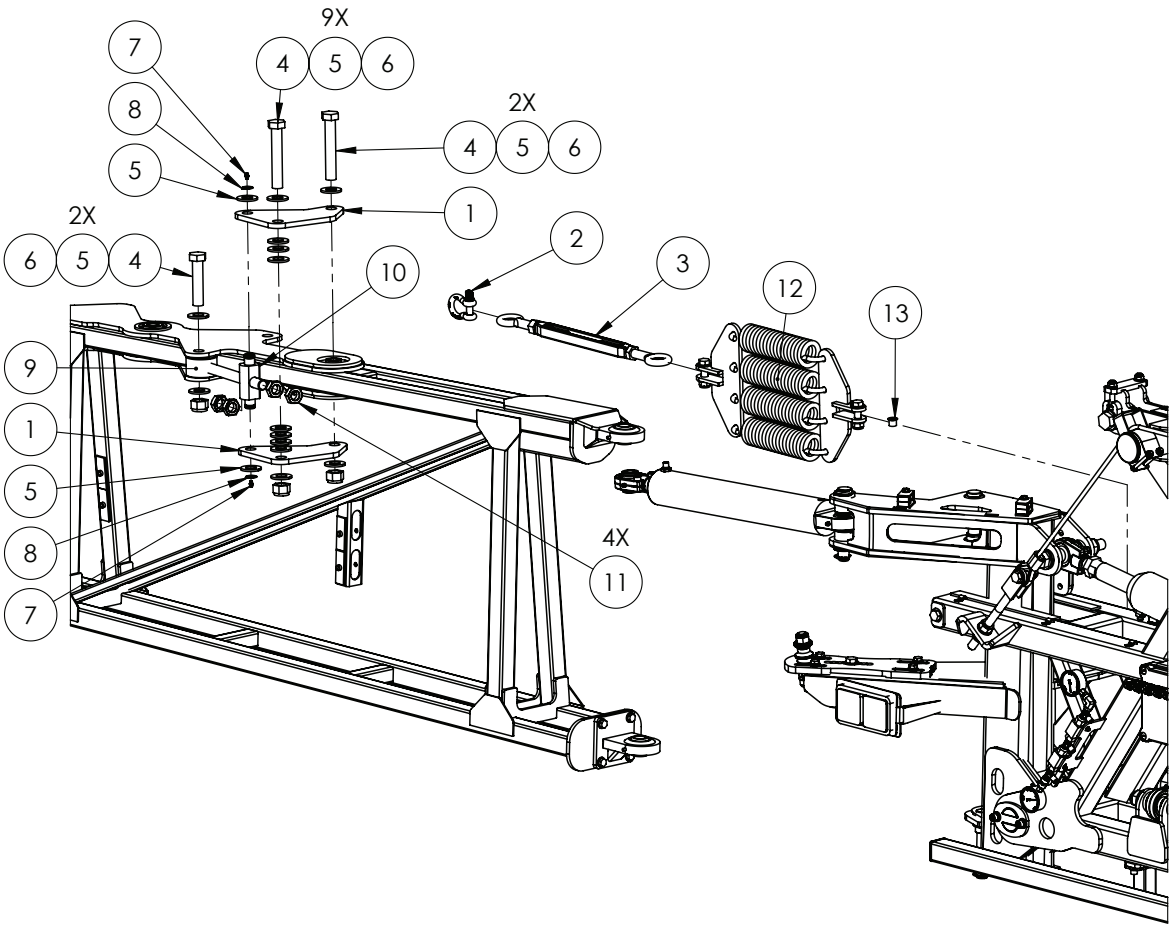

Quantities shown are per side.

ITEM NO.	PART NUMBER	DESCRIPTION	QTY.
1	GA4506970	Fold Adjuster Plate, Rear, 42m Dual Fold Cylinder	4
2	GA5075230	Bow Shackle 13mm WLL 3.25T Black	1
3	GA5017061	Turnbuckle, Eye ends, M22 thread & lock nut, Galvanised	1
4	GA5006043	Bolt 1 UNF 14 TPI x 6 GR8 ZP	6
5	GA5017681	Washer 1 x 2 7g Flat Thin SS	23
6	GA5012446	Nut 1" UNF 12 TPI Nyloc ZP	6
7	GA5012203	Grease nipple, Short, 1/4" UNF	4
8	GA5008519	Circlip, External, 25mm	4
9	GA5070775	Boom fold adjuster eyelet bolt, HD	2
10	24MK4DB006	Bush / pin, Fold ram adjuster nut and bolt retainer	2
11	GA0500048	Lock Nut, 1" UNF 12 TPI, ZP	8
12	*	Boom Cable Springs	1
13	GA5075220	Glacier bush flanged 16mm suit boom cable pivot	1

* Sub-assembly on following pages

Cable Drum - 24-36m

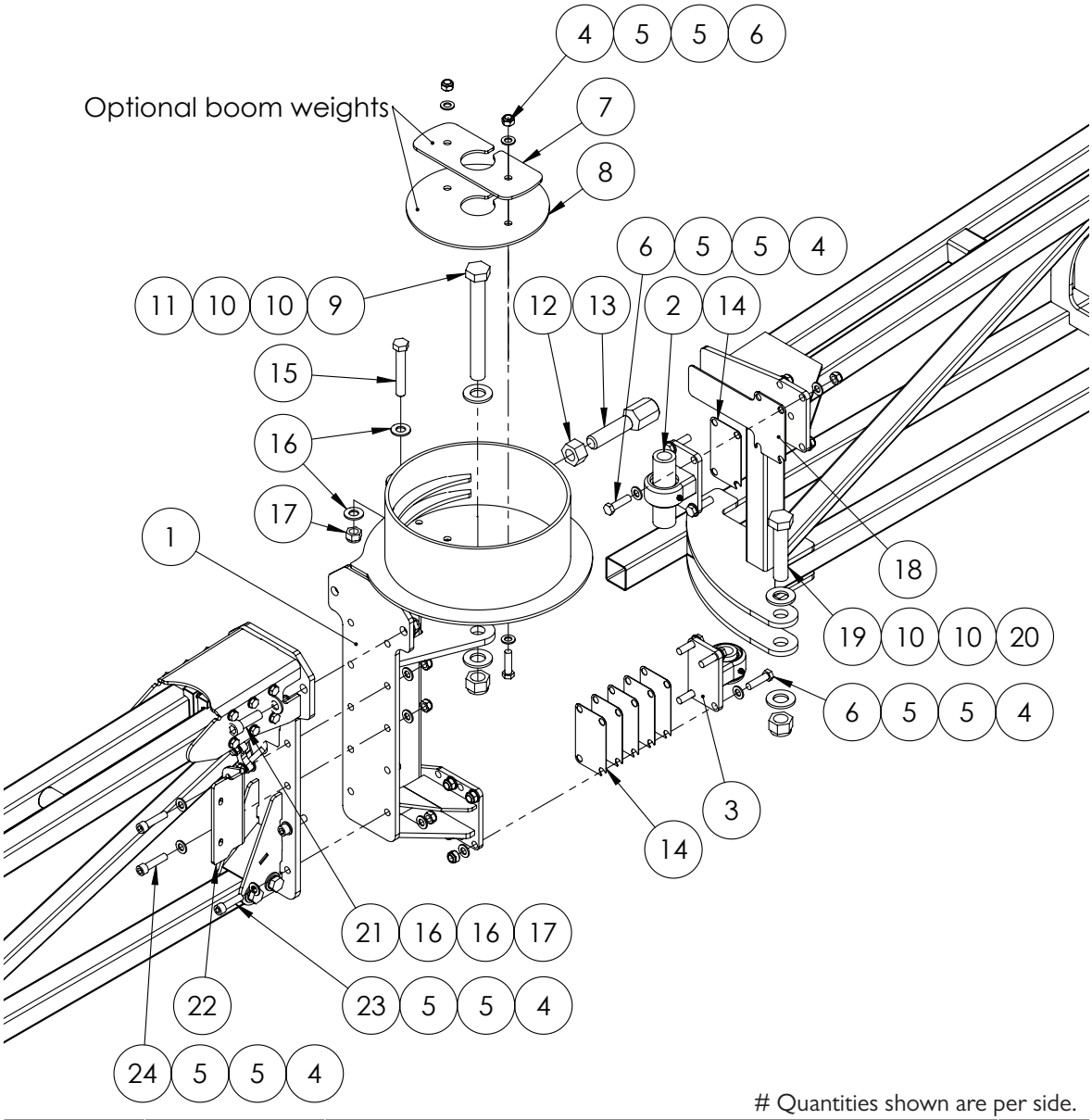

Quantities shown are per side.

ITEM NO.	PART NUMBER	DESCRIPTION	QTY.
1	GA4659580	Cable drum, Boom hinge, Right side, TriTech	1
	GA4659585	Cable drum, Boom hinge, Left side, TriTech	1
	GA4659600	Boom drum hinge OFFSET 24+ RH	1
	GA4659605	Boom drum hinge OFFSET 24+ LH	1
2	*	Upper Pivot Assembly	1
3	*	Lower Pivot Assembly	1
4	GA5012461	Nut M12 Nyloc ZP	20
5	GA5000577	Washer 12mm Flat SS HD	40
6	GA5000327	Set Screw M12 x 45 ZP GR8.8	10
7	GA4504535	Boom weight, Cable drum disc, 0.806 kg	1
8	GA4504530	Boom weight, Cable drum disc, 1.792 kg	1

Continued over page

Cable Drum - 24-36m

ITEM NO.	PART NUMBER	DESCRIPTION	QTY.
9	GA0500025	Bolt 1" UNF 12 TPI x 8 1/2" GR8 ZP	1
10	GA5017681	Washer 1" x 2" 7g Flat Thin SS	4
11	GA0500036	Nut, 1", UNF, 12 TPI, Conelock ZP	1
12	GA5010991	Nut, 1" UNF, 12 TPI, ZP	1
13	GA4572495	Bolt 1" UNF 12 TPI Boom drum stopper	1
14	DB-ADJ-16LAS	Shim, cable drum pivot, SS, 1mm	6
15	GA5011269	Bolt M16 x 100 GR8.8 ZP	1
16	GA5001043	Washer 16mm Flat SS HD	6
17	GA5001029	Nut M16 Nyloc ZP	3
18	GA4524690	Wear plate Upper boom top SS	1
19	GA5006039	Bolt, 1" UNF, 14 TPI x 4 1/2", GR8 ZP	1
20	GA5012445	Nut 1" UNF 14 TPI Nyloc ZP	1
21	GA5000935	SHCS M16 x 50 GR12.9 ZP	2
22	GA4522725	Boom hose holder plate outer	1
23	GA5000325	SHCS M12 x 45 GR12.9 ZP	8
24	GA5051470	SHCS M12 x 50 GR12.9 ZP	2

* Sub-assembly on following pages

Quantities shown are per side.

Bi-Fold - 24-36m

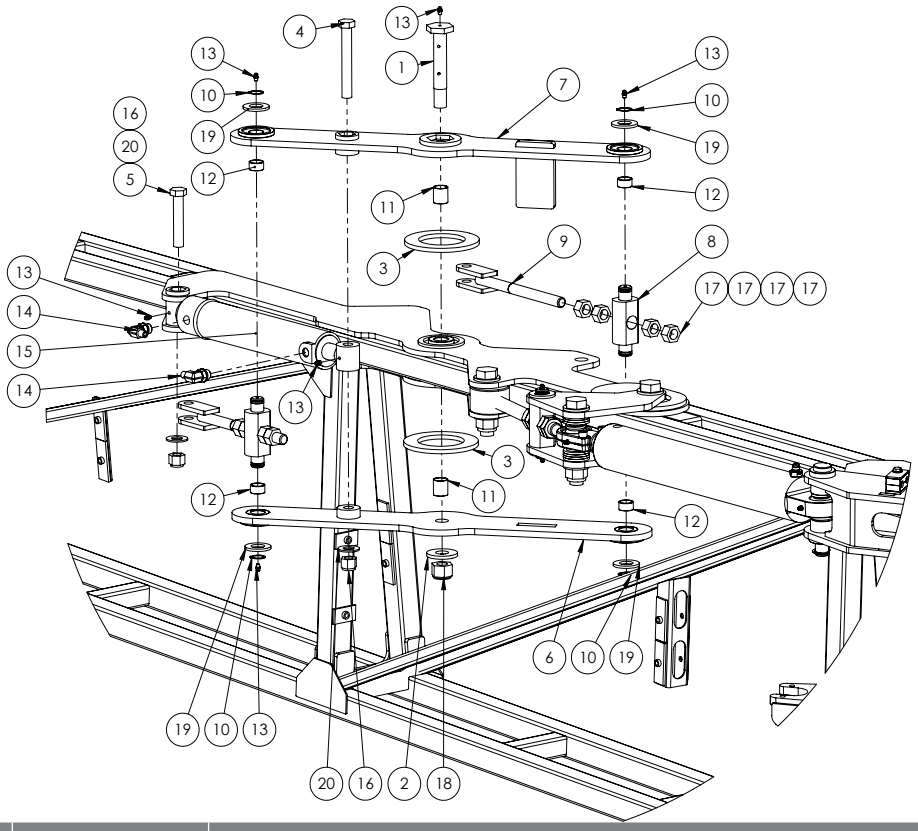

ITEM NO.	PART NUMBER	DESCRIPTION	QTY.
1	2SF-007MACH	2nd Stage Fold - Pivot Pin	2
2	2SF-003LAS	2nd Stage Fold - Pivot Washer	2
3	MACH0102	2nd stage pivot nylon washer black poly	2
4	GA5070335	Bolt 3/4” UNC x 5 1/2” GR8 ZP	2
5	GA5049490	Bolt 3/4” UNC x 4” HT ZP	2
6	GA4659730	Boom Bi-fold Bottom Bracket 42m	2
7	GA4659725	Boom Bi-fold Top Bracket 42m	2
8	24MK4DB006	Bush / pin, Fold ram adjuster nut and bolt retainer	4
9	GA5020320	Cable Adjuster 20mm Threaded	4
10	GA5008519	Circlip, External, 25mm	8
11	GA5009467	Glacier Bush 25ID x 30 long	4
12	GA5009463	Glacier Bush 25mm ID x 15 Long	8
13	GA5012203	Grease Nipple, Short, 1/4 UNF, MACH0207	14
14	GA3500348	Hydraulic adaptor, Elbow, 90 degree, 1/4” BSPT male x 3/4” UN male O-ring	4
15	GA5070845	Hypower ram suit 42m Bi fold 293mm stroke, 2 1/2” Bore, 1 1/4’’ Rod	2
16	GA5048430	Nut 3/4 UNC Nyloc ZP	4
17	GA5001709	Nut M20 Coarse ZP	16
18	GA5012469	Nut M24 Nyloc ZP	2
19	GA5017681	Washer 1 x 2 7g Flat Thin SS	8
20	GA5001045	Washer, 3/4” Flat, HD ZP	4

^ See Chapter 18 ‘Hydraulics’ for sub-assembly

3D Breakaway 2.0

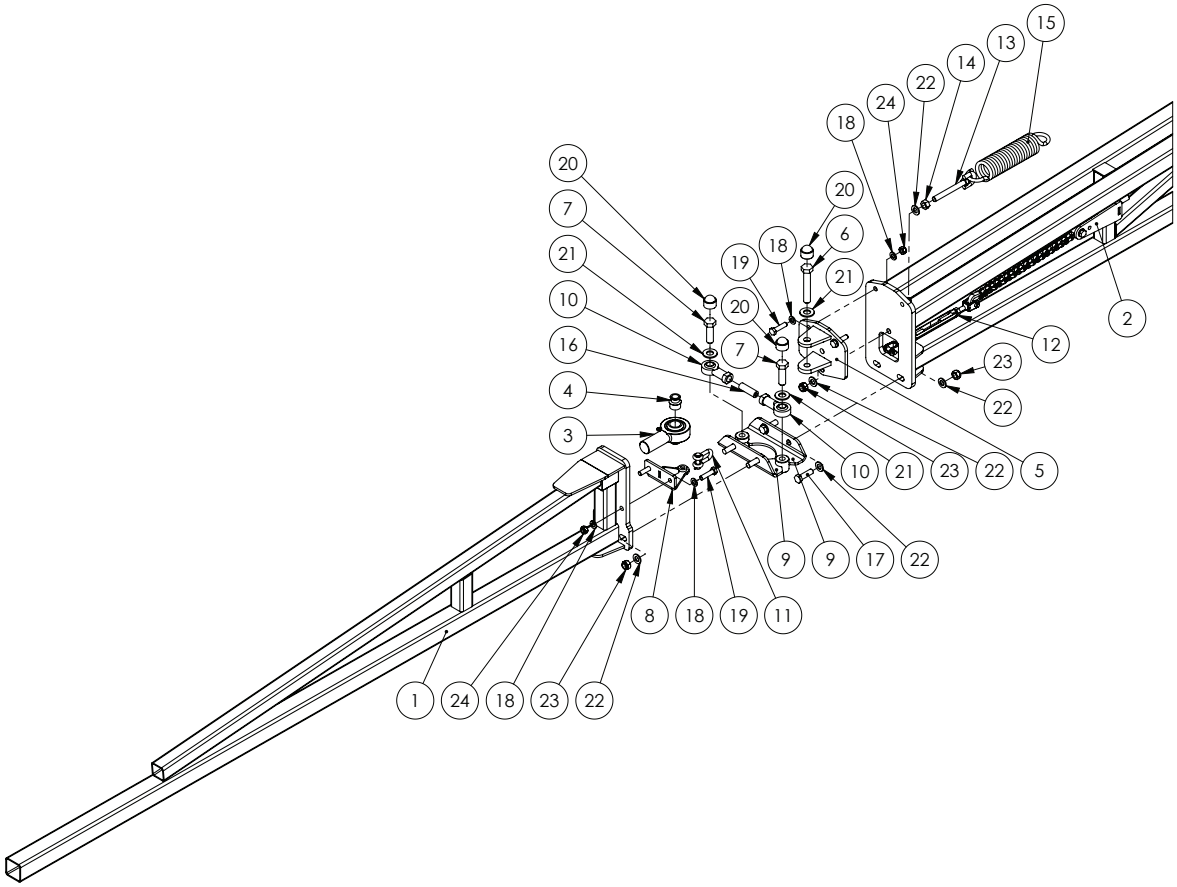

Quantities shown are per side.

ITEM NO.	PART NUMBER	DESCRIPTION	QTY.
1	GA4656123	Alum Breakaway 2m, Suit 3D breakaway 2.0	1
2	*	Breakaway Mechanism	1
3	GA5070530	Rose End 1" x 1 1/4" male UNF thread	1
4	GA4552225	Spacer bush, Rose end, Suit breakaway 3D 2.0	2
5	GA4656131	Rose End Clevis, Breakaway	1
6	GA5011297	Bolt M16 x 90 GR8.8 ZP	1
7	GA5000931	Bolt M16 x 50 GR8.8 ZP	2
8	GA4659810	Breakaway Hinge Bracket	1
9	GA4659336	Lower Pivot Bracket	2
10	GA5014469	Rod end, Ball 16 mm ID, M16 female thread	2
11	GA5071060	Utility Clevis 10 mm	1
12	GA5070505	Turnbuckle / rigging screw, 10mm, SS, Clevis ends	1
13	GA5075150	Eye Bolt 12mm x 100mm Short	1
14	GA5000559	Nut M12 Hex ZP	1
15	GA5016605	Spring, tension, 51.5 OD x 260 Long x 8mm, Breakaway	1
16	GA5071105	Grub Screw M16 x 50	1
17	GA5000319	Set Screw M12 x 40 GR8.8 ZP	4
18	GA5000117	Washer 10mm Flat SS HD	8

Continued over page

3D Breakaway 2.0

ITEM NO.	PART NUMBER	DESCRIPTION	QTY.
19	GA5011161	Set Screw M10 x 40 GR8.8 ZP	4
20	GA5075080	End cap, Plastic, Black, Cover, Hex. Dome, M16	3
21	GA5001043	Washer 16mm Flat SS HD	3
22	GA5000577	Washer 12mm Flat SS HD	10
23	GA5012461	Nut M12 Nyloc ZP	5
24	GA5000141	Nut M10 Nyloc ZP	4

* Sub-assembly on following pages

Quantities shown are per side.

3D Breakaway 2.0 - Mechanism

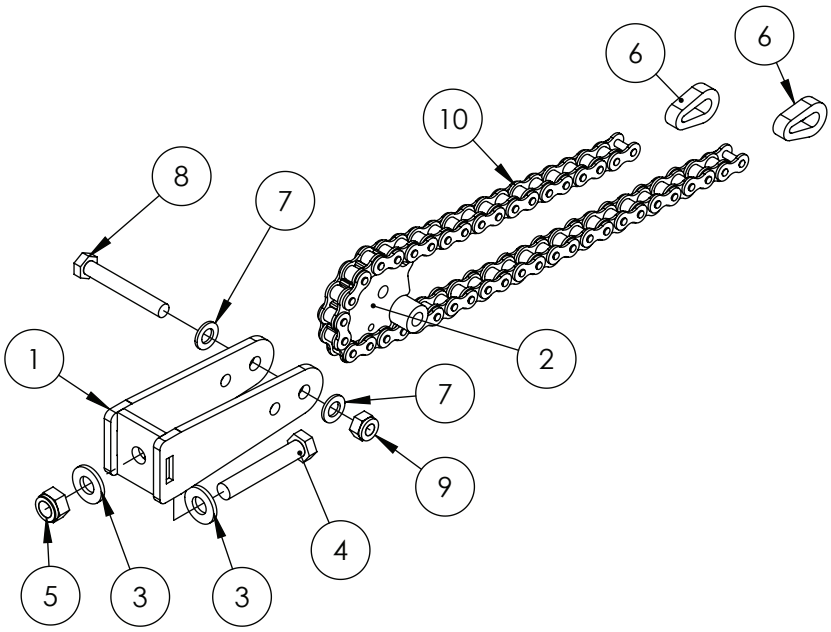

Quantities shown are per side.

ITEM NO.	PART NUMBER	DESCRIPTION	QTY
1	GA4659805	Breakaway Mount	1
2	GA4659800	Breakaway Centre Pivot Fab Assembly	1
3	GA5000577	Washer 12mm Flat SS HD	2
4	GA5000347	Bolt M12 x 70 ZP GR8.8	1
5	GA5012461	Nut M12 Nyloc ZP	1
6	GA4505695	Link Plate Chain End, suit breakaway	2
7	GA5000117	Washer 10mm Flat SS HD	2
8	GA5011163	Bolt M10 x 70 ZP GR8.8	1
9	GA5000141	Nut M10 Nyloc ZP	1
10	GA5068985	Chain, 5/8", 41 Pitch Breakaway Hinge, inc 2 Joining Links, 43 rollers total	1

Boom Protector Assembly - Outer

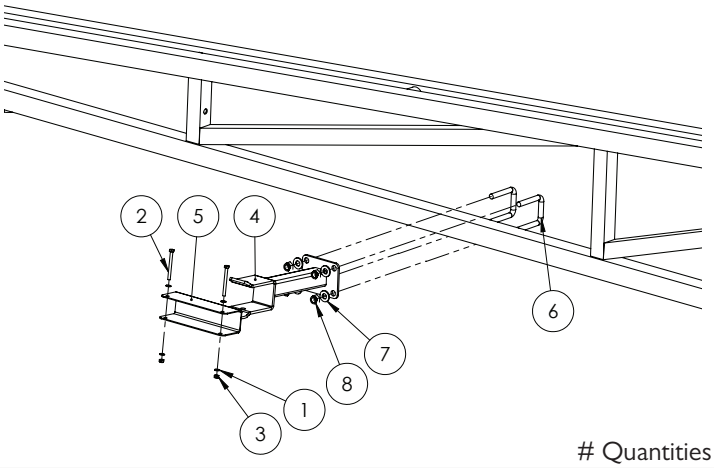

Quantities shown are per side.

ITEM NO.	PART NUMBER	DESCRIPTION	QTY.
1	GA5004437	Washer 6mm Flat SS	4
2	GA5004107	Bolt M6 x 70 ZP GR8.8	2
3	GA5048115	Nut M6 Nyloc ZP	2
4	GA4656277	Support bracket, Folded wing, Tri Tech	1
	GA4600360	Support bracket, Folded wing, Tri Tech, suit Trijet clock face nozzles	
5	F70294A	Boom wing protector, Suit 50 x 50 x 200mm long (2mm SS)	1
6	GA5011251	U bolt, Square top, M12 x 52mm x 80mm	2
7	GA5000577	Washer 12mm Flat SS HD	4
8	GA5012461	Nut M12 Nyloc ZP	4

Boom Protector Assembly - Inner

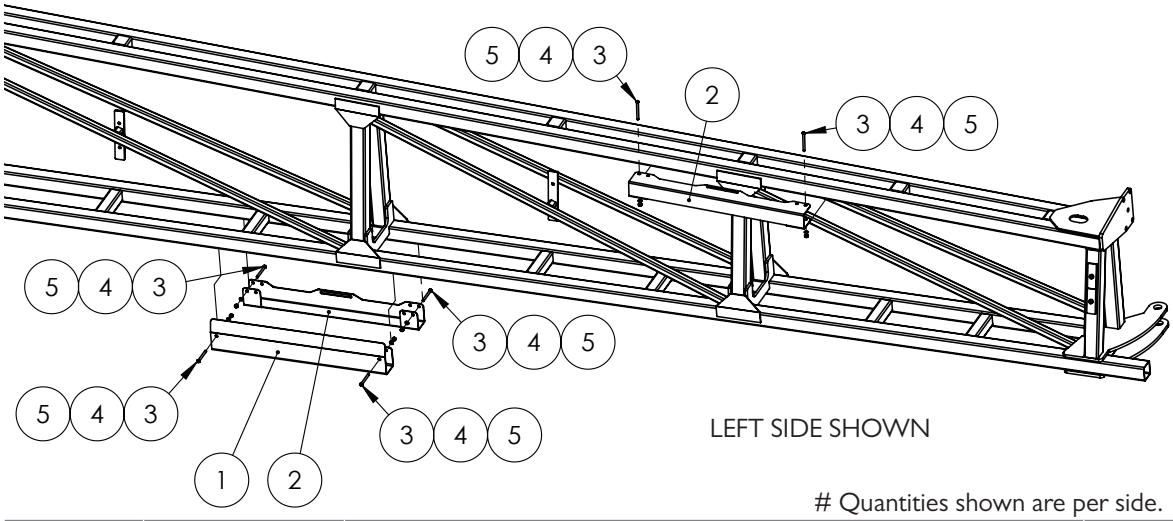

Quantities shown are per side.

ITEM NO.	PART NUMBER	DESCRIPTION	QTY.
1	GA4402215	Boom Protector SS Fits Over Gusset	1
2	GA4505005	Boom Slide Protector SS with cutout	2
3	GA0500067	BHCS M6 x 65 GR12.9 ZP	6
4	GA5004437	Washer 6mm Flat SS	12
5	GA5048115	Nut M6 Nyloc ZP	6

Fence Line End Protector - Quick Fit

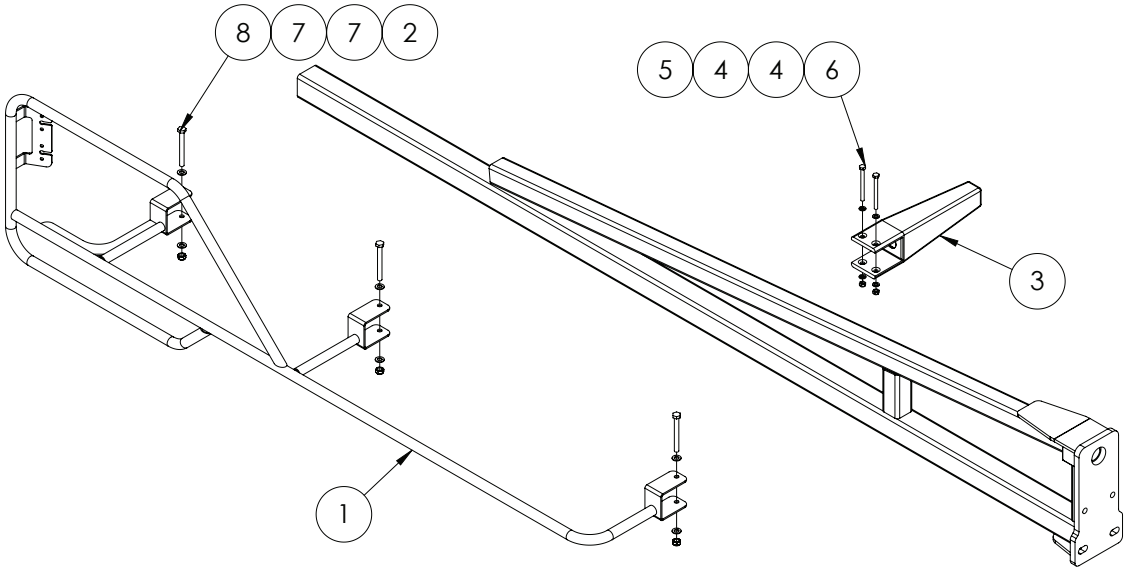

Quantities shown are per side.

ITEM NO.	PART NUMBER	DESCRIPTION	QTY.
1	GA4656316	Boom End Protector easy fit, Right Hand	1
	GA4656317	Boom End Protector easy fit, Left Hand	
2	GA5004917	Nut M8 Nyloc ZP	3
3	GA5006226	Boom stopper, Rubber, 210mm bumper, Suits 50 x 50mm RHS	1
4	GA5004437	Washer 6mm Flat SS	4
5	GA5048115	Nut M6 Nyloc ZP	2
6	GA5004107	Bolt M6 x 70 ZP GR8.8	2
7	GA5003643	Washer 8mm Flat SS HD	6
8	GA5052600	Bolt M8 x 75 SS	3

Boom Cables - 24-36m

INDIVIDUAL PART FORM - SPECIFIC FITMENT 24-36M

PART NUMBER	DESCRIPTION	QTY.
GA5000073	Cable, 10mm, Solid core, Heavy duty, Galvanised	See below.
	24-36m - Front - Cable cut length (Eye to eye length 6210mm)	6570mm
	24-36m - Rear - Cable cut length (Eye to eye length 7230mm)	8290mm
	24-36m - Bi-fold Front - Cable cut length (Eye to eye length 6220mm)	6580mm
	24-36m - Bi-fold Rear - Cable cut length (Eye to eye length 6230mm)	7290mm
GA5000215	Thimble, Cable, suit 11 - 12mm	4
GA5005391	Ferrule, Aluminium, 40 long x 4.5 wall, Code 11	4
GA5001965	Heat Shrink 25.4mm Black x 120mm long	8

NOTE: Front cable cut lengths are 360 mm longer than eye to eye measurement. Rear cable cut lengths are 1060 mm longer than eye to eye measurement.

FRONT CABLE

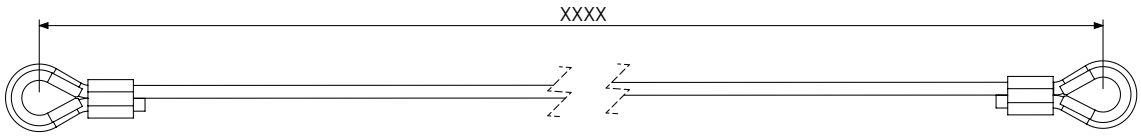

REAR CABLE

PRE-MADE FORM - SPECIFIC FITMENT 24-36M

PART NUMBER	DESCRIPTION	QTY.
GA4932680	Cable Front, Boom Bi-fold, TriTech 24-36m	2
GA4933640	Cable Front, Boom, TriTech 24 - 36m	2
GA4932685	Cable Rear, Boom Bi-fold, TriTech 24-36m	2
GA4933645	Cable Rear, Boom, TriTech 24 - 36m	2

SALES KIT FORM - UNIVERSAL FITMENT 24-36M

ITEM NO.	PART NUMBER	DESCRIPTION	QTY.
1	GA1100033	Boom Cable Kit - Front	2
2	GA1100034	Boom Cable Kit - Rear	2
3	GA1100037	Boom Cable Kit - Centre Level	2

Boom Cable Springs - 24-36m

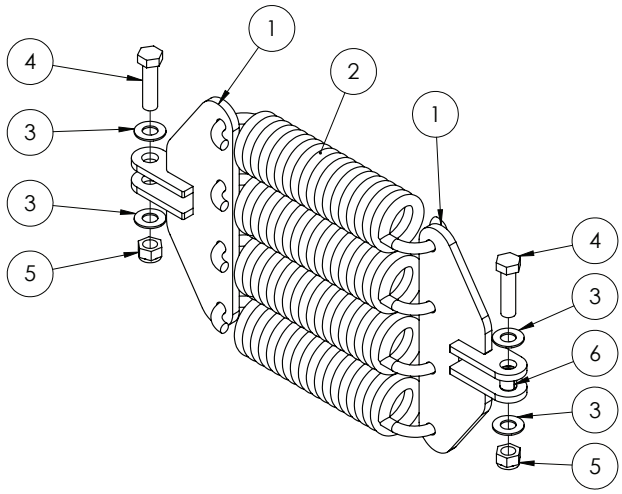

GA4905665 30-36m cable damper assembly

Quantities shown are per side.

ITEM NO.	PART NUMBER	DESCRIPTION	QTY.
1	GA4659710	Cable Spring-Shocker Mount Component	2
2	GA5010793	Spring, tension, 70 OD x 329 long x 12mm, large	4
3	GA5001043	Washer 16mm Flat SS HD	4
4	GA5000941	Bolt M16 x 60 ZP GR8.8	2
5	GA5001029	Nut M16 Nyloc ZP	2
6	GA5075220	Glacier bush flanged 16mm suit boom cable pivot	1

Upper Pivot Assembly

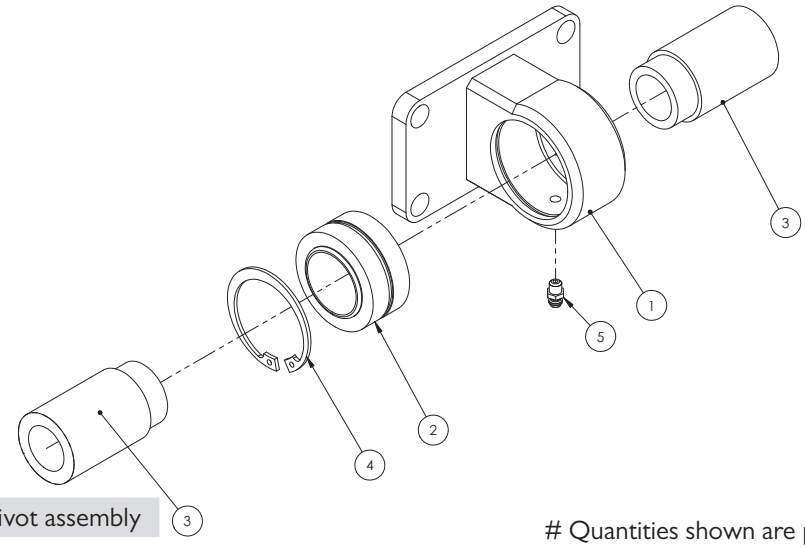

GA4932342 Upper pivot assembly

Quantities shown are per side.

ITEM NO.	PART NUMBER	DESCRIPTION	QTY.
1	GA4656190	Boom hinge bearing Mount 24+	1
2	GA5015659	Bearing, Spherical bush, 34.925 ID x 55.663 OD x 30.150mm thick, GEZ34ES2RS	1
3	DB-ADJ-13	Bush, Stepped, 25.5 ID x 40 OD x 69.75mm long	2
4	GA5010573	Circlip, Internal, 55mm bore	1
5	GA5012203	Grease nipple, Short, 1/4" UNF	1

Lower Pivot Assembly

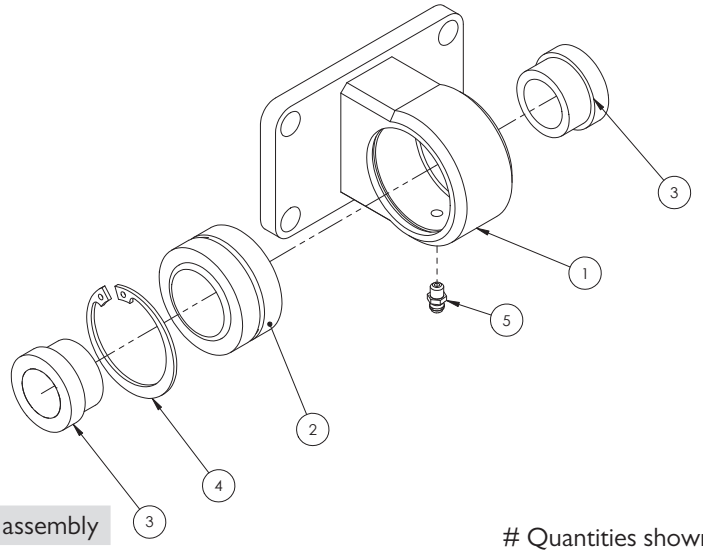

GA4932343 Lower pivot assembly

Quantities shown are per side.

ITEM NO.	PART NUMBER	DESCRIPTION	QTY.
1	GA4656190	Boom hinge bearing Mount 24+	1
2	GA5015659	Bearing, Spherical bush, 34.925 ID x 55.663 OD x 30.150mm thick, GEZ34ES2RS	1
3	DB-ADJ-02	Bush, Short, 40 OD x 25.5 ID x 23.75mm long	2
4	GA5010573	Circlip, Internal, 55mm bore	1
5	GA5012203	Grease nipple, Short, 1/4" UNF	1

Steel Inner Wings

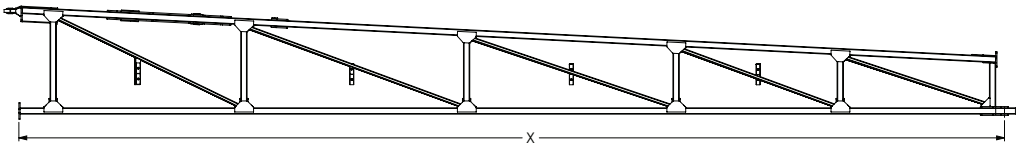

PART NUMBER	DESCRIPTION
GA4656822	Inner Wing 36m RH - 7848mm
GA4656827	Inner Wing 36m LH - 7848mm

NOTE: Steel inner wings are unique to the Crop Cruiser and will not fit other sprayers.

Aluminium Outer Wings

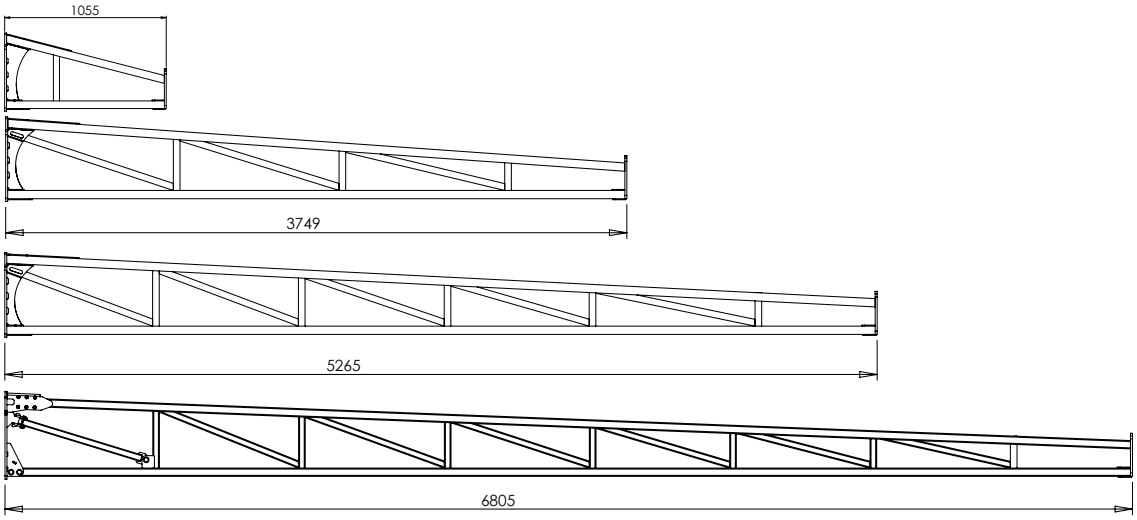

PART NUMBER	DESCRIPTION
GA4659820	24m Outer boom section (1055mm Long)
GA4659925	30m Outer boom section (3749mm Long)
GA4656067	33m Outer boom section (5265mm Long)
GA4660390	36m Outer boom section, Aluminium, U Bolt Mounted
GA4907345	36m Outer boom section (6805mm Long) - Complete with brace

Aluminium Break Away Tip

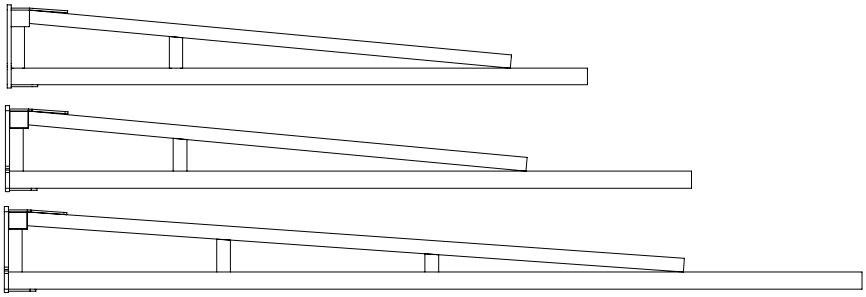

PART NUMBER	DESCRIPTION
GA4656640	Boom breakaway end - 1.75 m
GA4656123	Boom breakaway end - 2.0 m
GA4656124	Boom breakaway end - 2.5 m

Aluminium Outer Assembly 36m

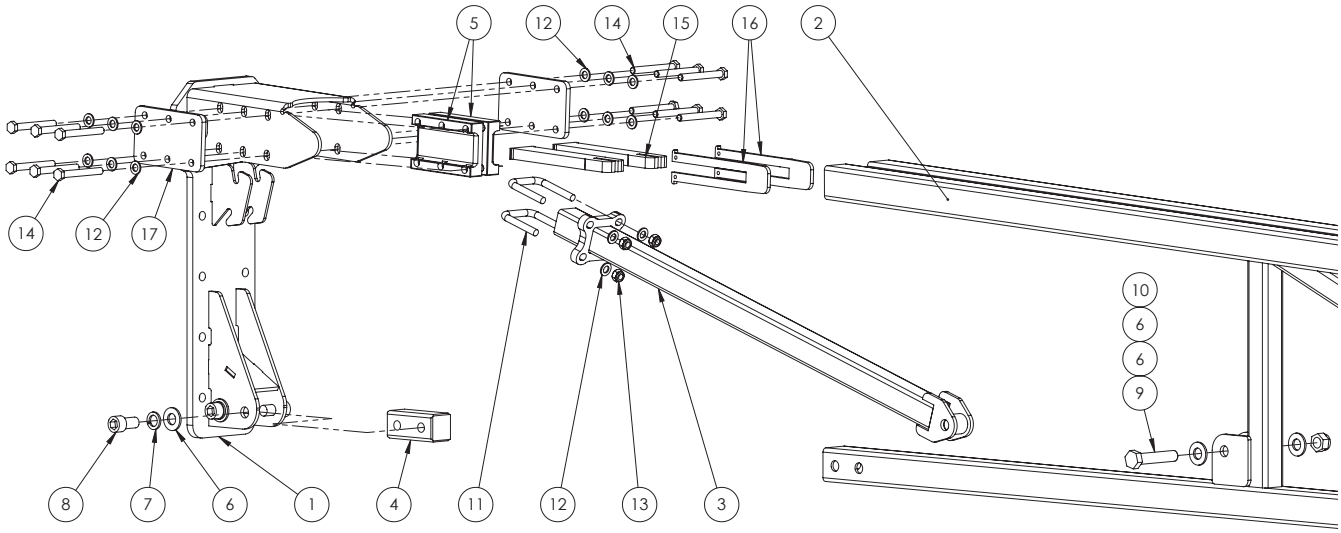

Quantities shown are per side.

ITEM NO.	PART NUMBER	DESCRIPTION	QTY.
1	GA4660376	Mount Bracket, for Aluminium Boom	1
2	GA4660390	Boom Section, 36m Aluminium, U Bolt Mounted	1
3	GA4660740	Brace Bar, Aluminium Boom	1
4	GA4550031	Threaded Steel Insert Block suit 50x50x4 mm, Bottom Chord	1
5	GA4550740	Clamp Block, Aluminium Boom Mount	2
6	GA5001043	Washer 16mm Flat SS HD	6
7	GA5001051	Washer 16mm Spring SS	4
8	GA5000915	SHCS M16 x 30 GR12.9 ZP	4
9	GA5011307	Bolt M16 x 80 GR8.8 ZP	1
10	GA5001029	M16 Nyloc Nut	1
11	GA5053645	U bolt Square top M10 x 52 x 75 mm	2
12	GA5000117	Washer 10mm Flat SS HD	16
13	GA5000141	Nut M10 Nyloc ZP	4
14	GA5011182	Bolt M10 x 85 GR8.8 ZP	12
15	GA4403910	Spacer Insert, Aluminium Boom RHS Chord	2
16	GA4403915	Locating Plate, Spacer Insert, Aluminium Boom RHS Chord	2
17	GA4404735	Plate, Boom Clamp, Outer Support	2

Touch Down Wheel

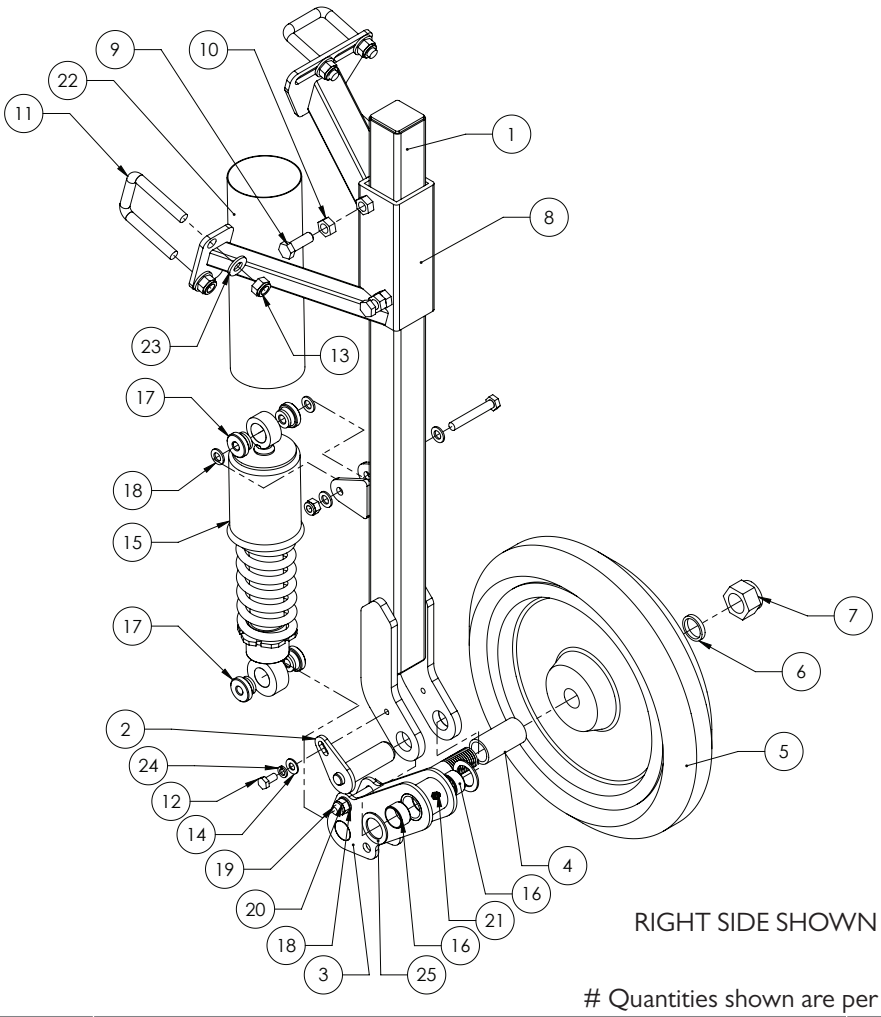

Quantities shown are per side.

ITEM NO.	PART NUMBER	DESCRIPTION	QTY.
-	GA4902492	Touch down wheel LH	-
-	GA4902491	Touch down wheel RH	-
1	GA4657650	Boom Touch Down Wheel Arm	1
2	GA4657645	Pivot Pin, suit Boom Touch Down Wheel Swing Arm	1
3	GA4657655	Swing Arm Boom Touch Down Wheel	1
4	GA4583030	Spacer Touch Down Wheel	1
5	GA5052275	Press Wheel 15" with sealed bearings	1
6	GA4535115	Bearing Washer, suit Touch Down Wheel	1
7	GA5012446	Nut 1” UNF 12 TPI Nyloc ZP	1
8	GA4657640	Mount Boom touch down wheel	1
9	GA5000311	Set screw, M12 x 35, ZP GR 8.8	2
10	GA5000559	Nut M12 Hex ZP	2
11	GA5011251	U bolt, Square top, M12 x 52mm x 80mm	3
12	GA5011465	Bolt M8 x 16 ZP GR8.8	1
13	GA5012461	Nut M12 Nyloc ZP	6
14	GA5003643	Washer 8mm Flat SS HD	1

Continued over page

Touch Down Wheel

ITEM NO.	PART NUMBER	DESCRIPTION	QTY.
15	GA5067085	Universal shocker 320 eye-eye	1
16	GA5009463	Glacier Bush, ID 25 x 15mm long	2
17	GA4583100	Bush, Black nylon, 30 OD x 10 ID x 16.5mm	4
18	GA5000117	Washer 10mm Flat SS HD	6
19	GA5006101	Bolt M10 x 65 ZP GR8.8	2
20	GA5000141	Nut M10 Nyloc ZP	2
21	GA5012203	Grease nipple, Short, 1/4" UNF	1
22	GA5052375	Hose Lay Flat 63mm Blue (cut 270mm long)	1
23	GA5000577	Washer 12mm Flat SS HD	6
24	GA5004919	Washer 8mm Spring SS	1
25	GA4522315	Washer, 27 ID x 40 OD x 2mm thick, SS	2

Chapter 15

ELECTRICS

Lighting - Boom Tip LEDs

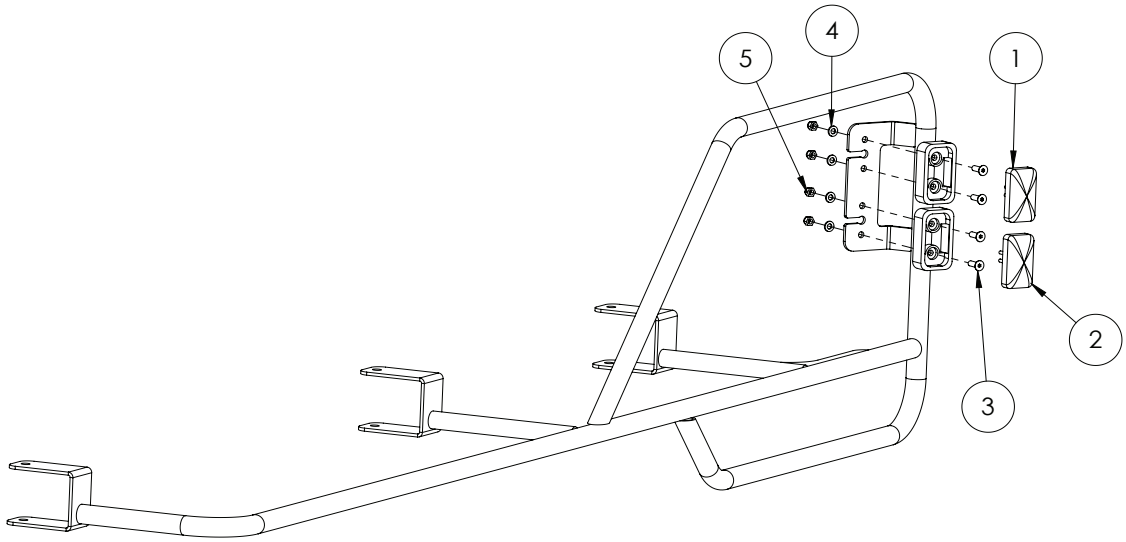

ITEM NO.	PART NUMBER	DESCRIPTION	QTY.
1	GA5060057	Clearance light with connector, Orange LED	1
2	GA5060056	Clearance light with connector, Red LED	1
3	GA5051230	CSCS M5 x 16 SS A2-70	4
4	GA5003983	Washer 5mm Flat SS	4
5	GA5003975	Nut M5 Nyloc SS	4

Lighting - Headlight & Indicator

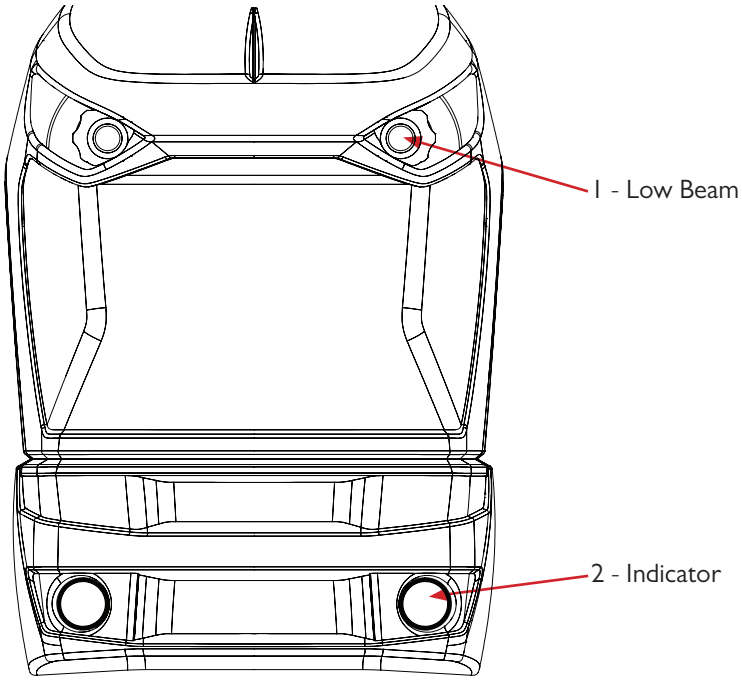

ITEM NO.	PART NUMBER	DESCRIPTION	QTY.
-	GA3000082	HB3 12V 60w Globe - High and low beam	-
1	GA5075405	Headlight Assembly, Low Beam, 12v, 60w, Projector	2
2	GA5075415	Indicator / Running Light Assembly, LED	2

Lighting - Bonnet LED Light Bar - Optional

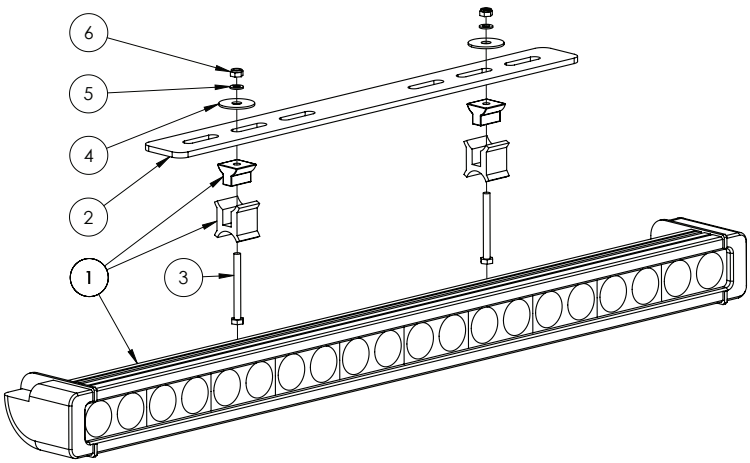

ITEM NO.	PART NUMBER	DESCRIPTION	QTY.
1	GA5075510	Light, LED, Bar, Spot & Flood beam, 180W - Includes connector	1
2	GA4506725	Plate, Light Bar Mount, Lower Bonnet	1
3	GA5004097	Bolt M6 x 60 GR8.8 ZP	2
4	GA5017645	Washer 1/4" ID x 1 1/4" OD x 16g SS	2
5	GA5004437	Washer 6mm Flat SS	2
6	GA5048115	Nut M6 Nyloc ZP	2

Lighting - Cab Lights - Front

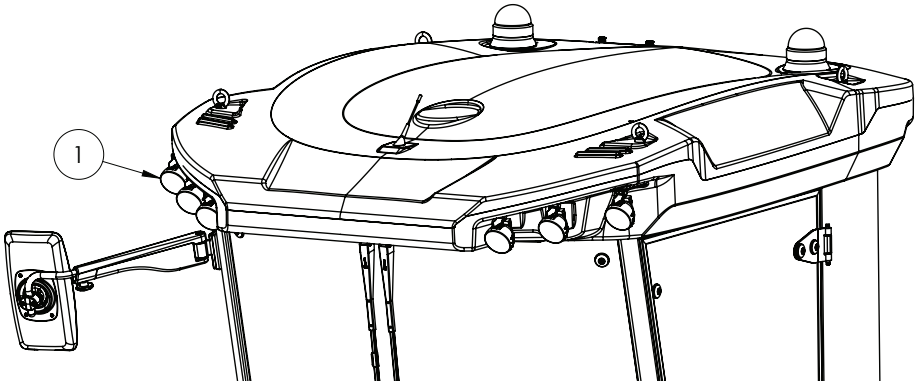

ITEM NO.	PART NUMBER	DESCRIPTION	QTY.
1	-	Bulb, H27 12V	6
	GA5075317	Work Light, round, LED 11w, bare wires, Black suit Euro cab	6

Lighting - Cab Lights - Rear

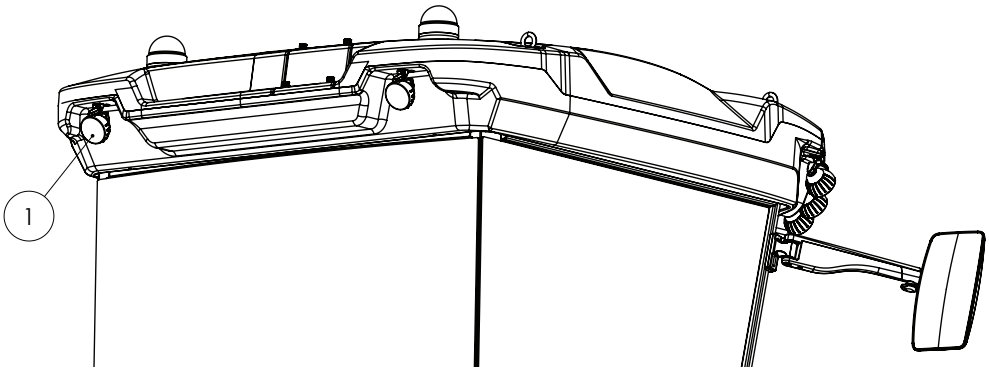

ITEM NO.	PART NUMBER	DESCRIPTION	QTY.
1	GA5075317	Work Light, round, LED 11w, bare wires, Black suit Euro cab	2

Lighting - Rear Tail Lights

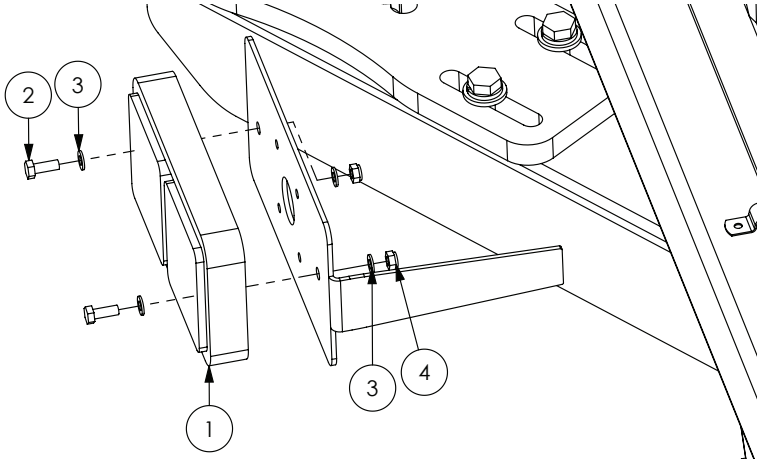

ITEM NO.	PART NUMBER	DESCRIPTION	QTY.
1	GA5018786	Lamp, LED, 12V, Brake / tail light / indicator, 190 x 100mm	2
2	GA5011395	Bolt M6 x 16 SS	4
3	GA5004437	Washer 6mm Flat SS	8
4	GA5048115	Nut M6 Nyloc ZP	4

Lighting - Night Pro LEDs

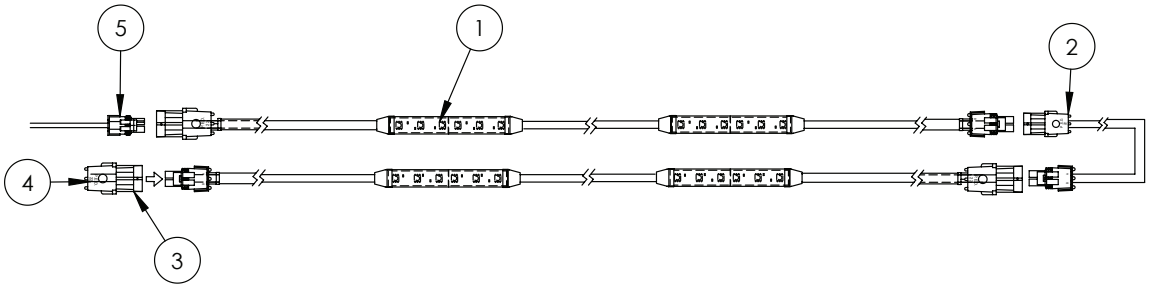

ITEM NO.	PART NUMBER	DESCRIPTION	QTY.
1	GA5060136	Harness, Boom Light 2 LED Strip, 12v 0.24Amp	36
2	GA5060137	Harness, Pivot Extension 2000mm	4
	GA5060138	Harness, Pivot Extension 5000mm	-
3	GA5007381	Connector, 2 pin, Female, Weather pack	4
4	GA5050245	Seal, Cavity blanking plug, Weather pack connector	8
5	GA3000016	Harness, Quad splitter, suit night pro power supply	1

NOTE: The quantity shown is for a full 36 meter boom.

Lighting - Rotating Beacon - Pole Mount

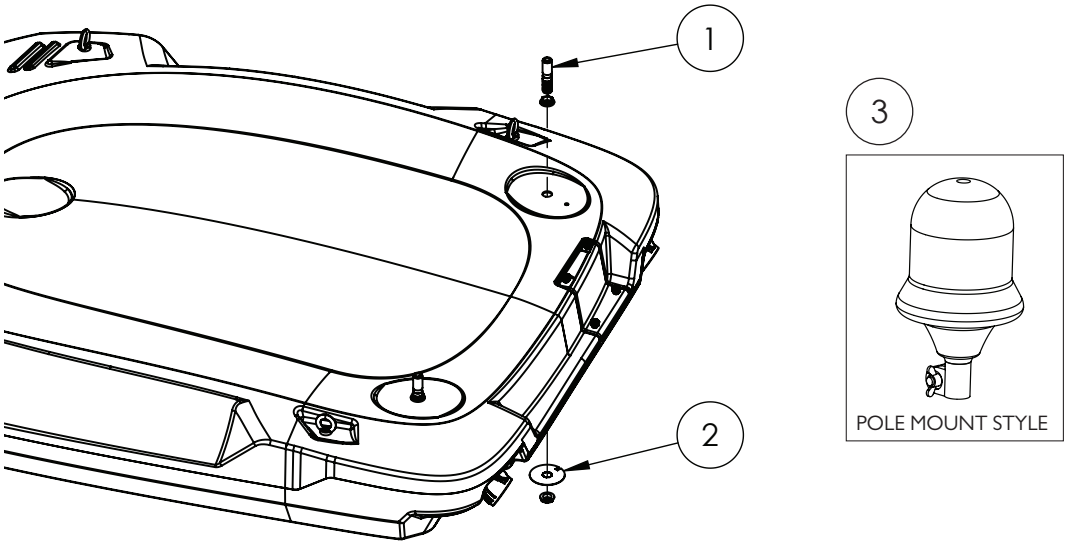

ITEM NO.	PART NUMBER	DESCRIPTION	QTY.
1	GA5020411	Beacon insert screw in - supplied with nuts	2
2	GA4402305	Plate, Flashing Beacon Light Mount with Earth Tab	2
3	GA5048975	Beacon, Rotating, Amber, DIN A pole mount, with 12V H1 globe	2

Lighting - Egress Relay

ITEM NO.	PART NUMBER	DESCRIPTION	QTY.
1	GA5068760	Relay, Delay timer	1

NOTE: The egress lighting delay timer relay is located under the exterior cabin roof cover on the left hand side, near the cabin roof main power relay.

Lighting - Work Lights

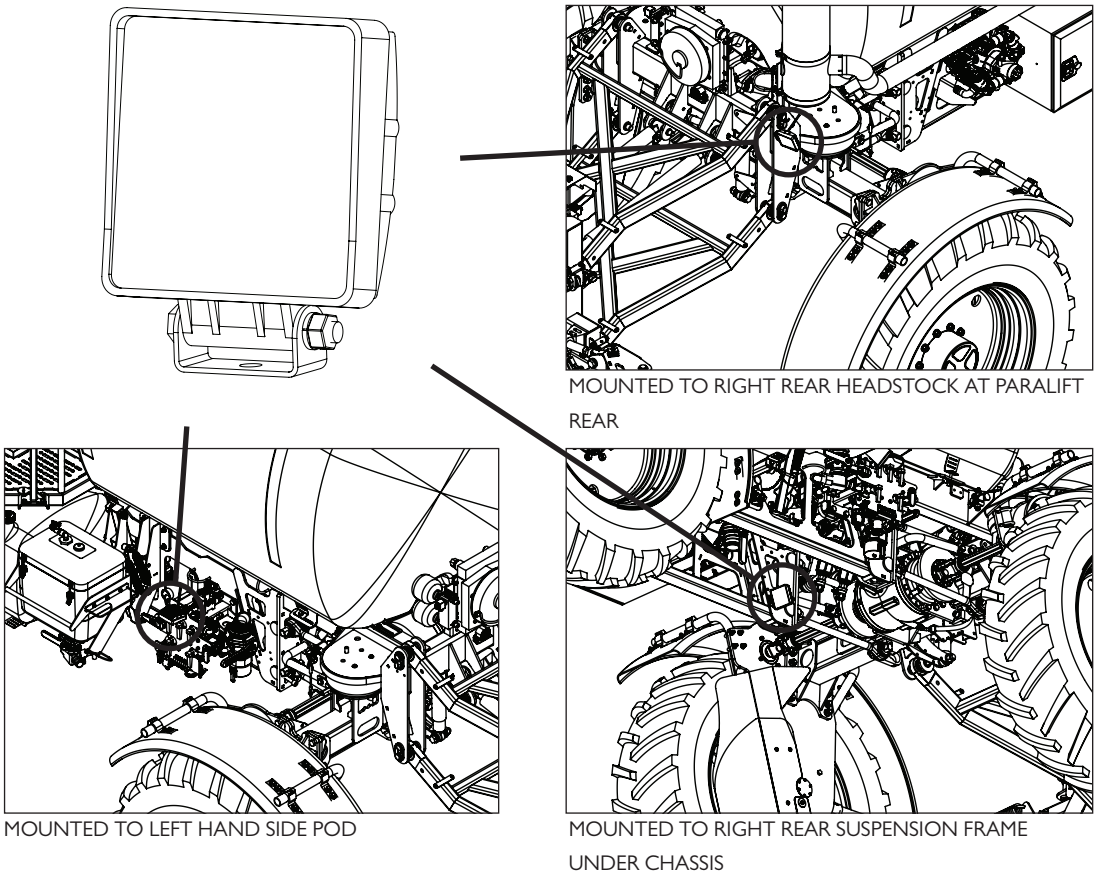

WORK LIGHT KIT

PART NUMBER	DESCRIPTION
GA4912424	Work Lights, LED, Kit inc. 3 lights for mount positions shown above

WORK LIGHT SPARES

PART NUMBER	DESCRIPTION	QTY.
GA5075500	Light, LED, Work, Flood beam, bare wires, 12v, 24W	1
GA5007381	Connector, 2 pin, Female, Weather pack	1
GA5016617	Pin, Male, Sealed, Weather pack, Wire 1.0 - 2.0mm	2
GA5014857	Seal, Green, Weather pack connector, Wire from 2.03 - 2.85mm	2
GA5006113	Bolt M10 x 20 GR8.8 ZP	1
GA5003643	Washer 8mm Flat SS HD	2
GA5004917	Nut M8 Nyloc ZP	1
GA5003039	Electrical wire, 3mm, Twin core, Double insulated, Black outer , Red & black inner	-
GA5012161	Split Tubing, 7mm	-

Quantities shown are per work light.

Batteries

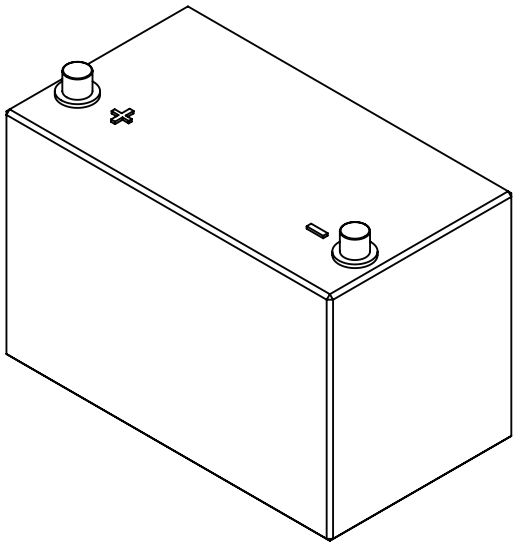

ITEM NO.	PART NUMBER	DESCRIPTION	QTY.
1	GA5071620	Battery, Delkor 27H710, 710 CCA, G3 G4 series	2

Reverse Warning Beeper

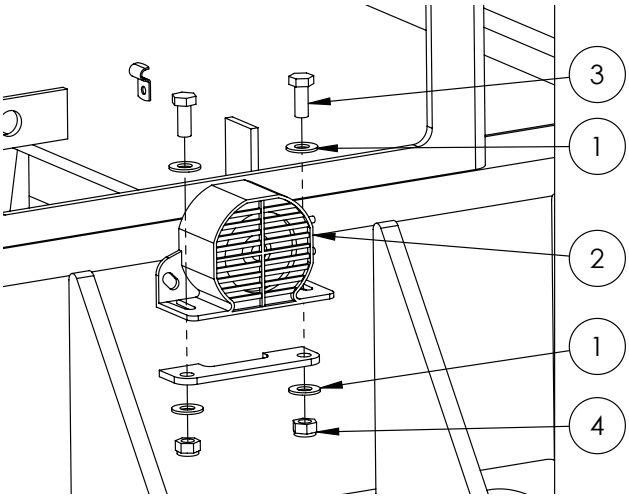

ITEM NO.	PART NUMBER	DESCRIPTION	QTY.
1	GA5003643	Washer 8mm Flat SS HD	4
2	GA5011985	Reverse Beeper	1
3	GA5004085	Bolt M8 x 20	2
4	GA5052590	Nut M8 Nyloc SS 316	2

Horn

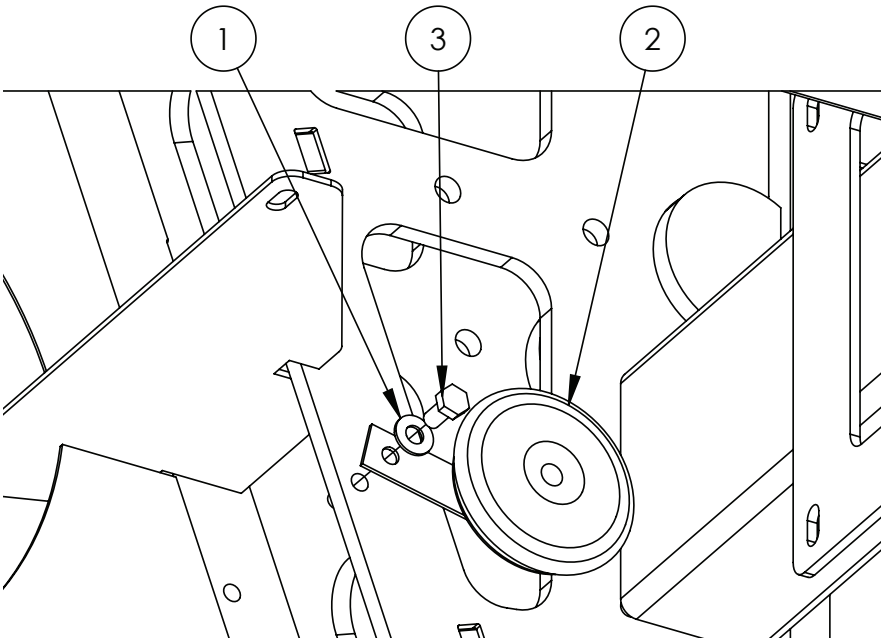

ITEM NO.	PART NUMBER	DESCRIPTION	QTY.
1	GA5003643	Washer 8mm Flat HD	1
2	GA5011983	Horn, 12V Narva, 72517	1
3	GA5011465	Bolt M8 x 16 ZP	1

Buss Bar & Isolator Switch

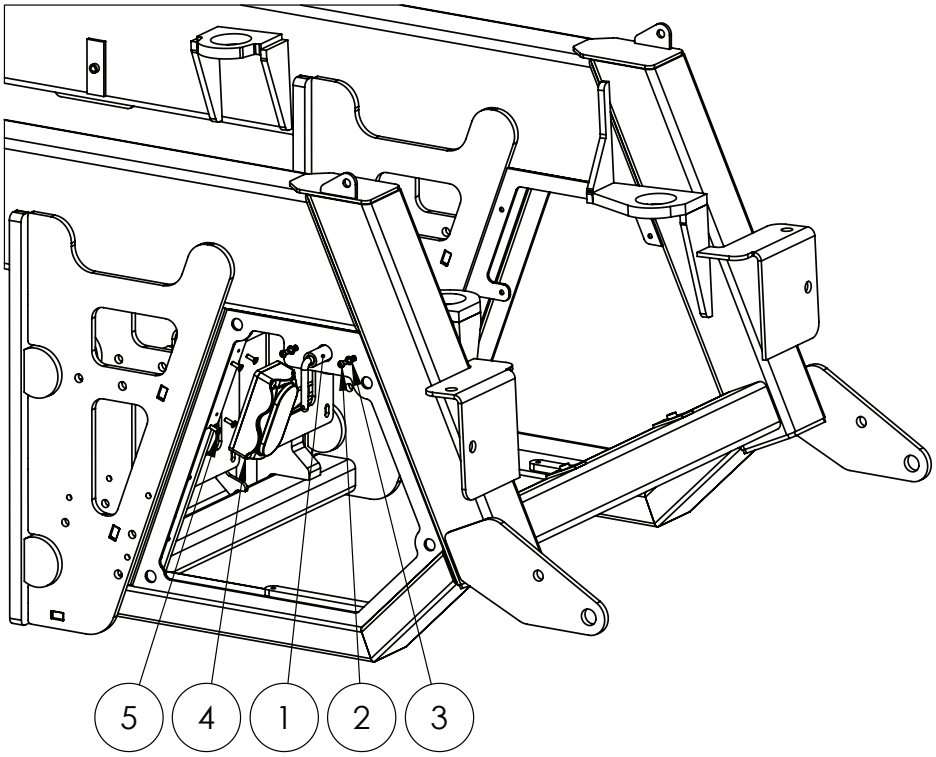

ITEM NO.	PART NUMBER	DESCRIPTION	QTY.
-	GA5002077	Key ring, 25mm, SS	1
-	GA4922231	Chain 20mm x 2mm (cut 200mm Long)	1
1	GA5005787	Battery Isolator switch large	1
2	GA5004023	BHCS M6 x 10 SS A2-70	2
3	GA5004437	Washer 6mm Flat SS	2
4	GA5050630	Electrical Buss Bar	1
5	GA5051230	CSCS M5 x 16 SS A2-70	4

Cabin Fuse Box

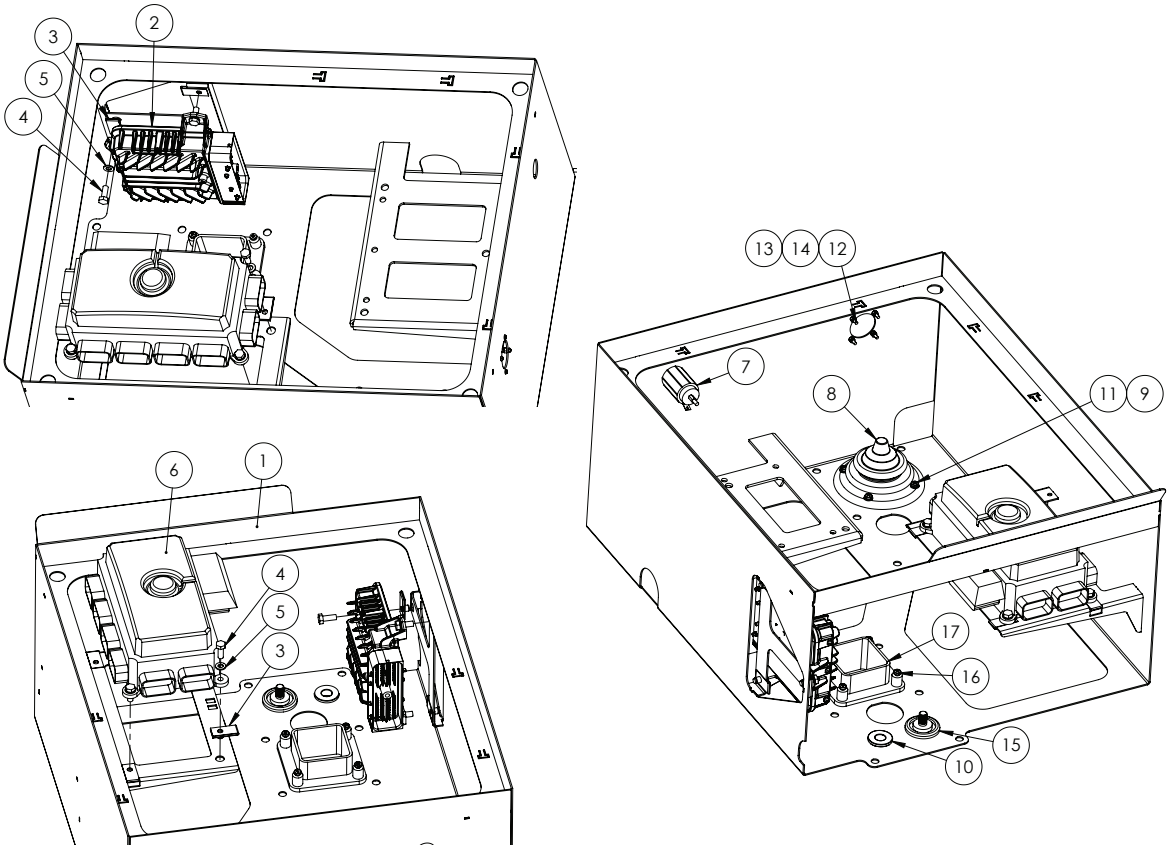

ITEM NO.	PART NUMBER	DESCRIPTION	QTY.
1	GA4660305	Fuse Box Compartment, G3 G4	1
2	GA5075265	TCM, 2500 Allison, G Series	1
3	GA5066830	Speed clip M6	7
4	GA5004041	Bolt M6 x 16	7
5	GA5004437	Washer 6mm Flat SS	7
6	GA5060033	Functions Fuse Box A	1
7	GA5007121	Lighter Socket	1
8	GA5069725	Gromet Slop stop 105 x 60	1
9	GA5020510	Washer 4mm Flat Heavy duty SS	4
10	GA5012199	29mm Neoprene Grommet	1
11	GA5011360	Pan Head Screw M4 x 10mm	4
12	GA5003083	Screw M3 x 12mm SS	4
13	GA5011351	Washer 3mm Flat	4
14	GA5049465	Nut M3 Nyloc SS	4
15	GA5006379	Battery Feed Stud - Britax	1
16	GA5049020	Pan Head Screw M4 x 25	4
17	GA5061195	Deutsch Connector DRB Bulk Head suit 48 pin	1
18	GA3000025	Harness, Main Console, G3 G4	1
19	260112	Allison Transmission Harness	1
20	WA7790HA	Allison Backbone CAN Harness	1

Fuse Box 'A' - Cabin

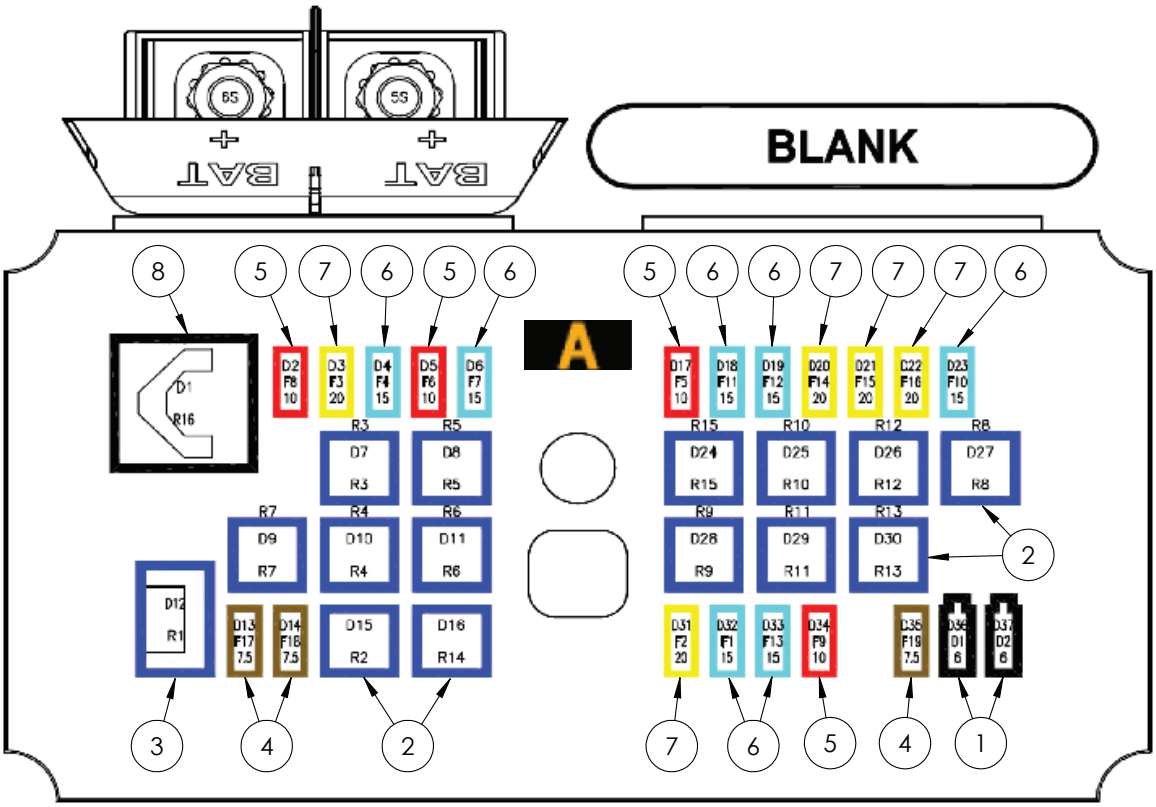

ITEM NO.	PART NUMBER	DESCRIPTION	QTY.
1	GA5075040	DIODE, 6 AMP, WITH WING KEY, SUIT CROP CRUISER 2009	2
2	GA5075035	RELAY, ULTRA MICRO ISO280, 4 PIN SQUARE, SPST, 12V 20A	14
3	GA5075030	RELAY, ULTRA MICRO ISO280, 5 PIN, SPST, 12V 20A	1
4	GA5054840	MINI BLADE FUSES 7.5AMP	3
5	GA5054845	MINI BLADE FUSES 10 AMP	4
6	GA5054850	MINI BLADE FUSES 15 AMP	7
7	GA5054855	MINI BLADE FUSES 20 AMP	5
8	GA5075055	FLASHER RELAY, SUIT SP MICRO FUSE BOX, BLINKER, INDICATOR, 3 PIN ISO, LED 12V	1

Electrical Connectors - AMP

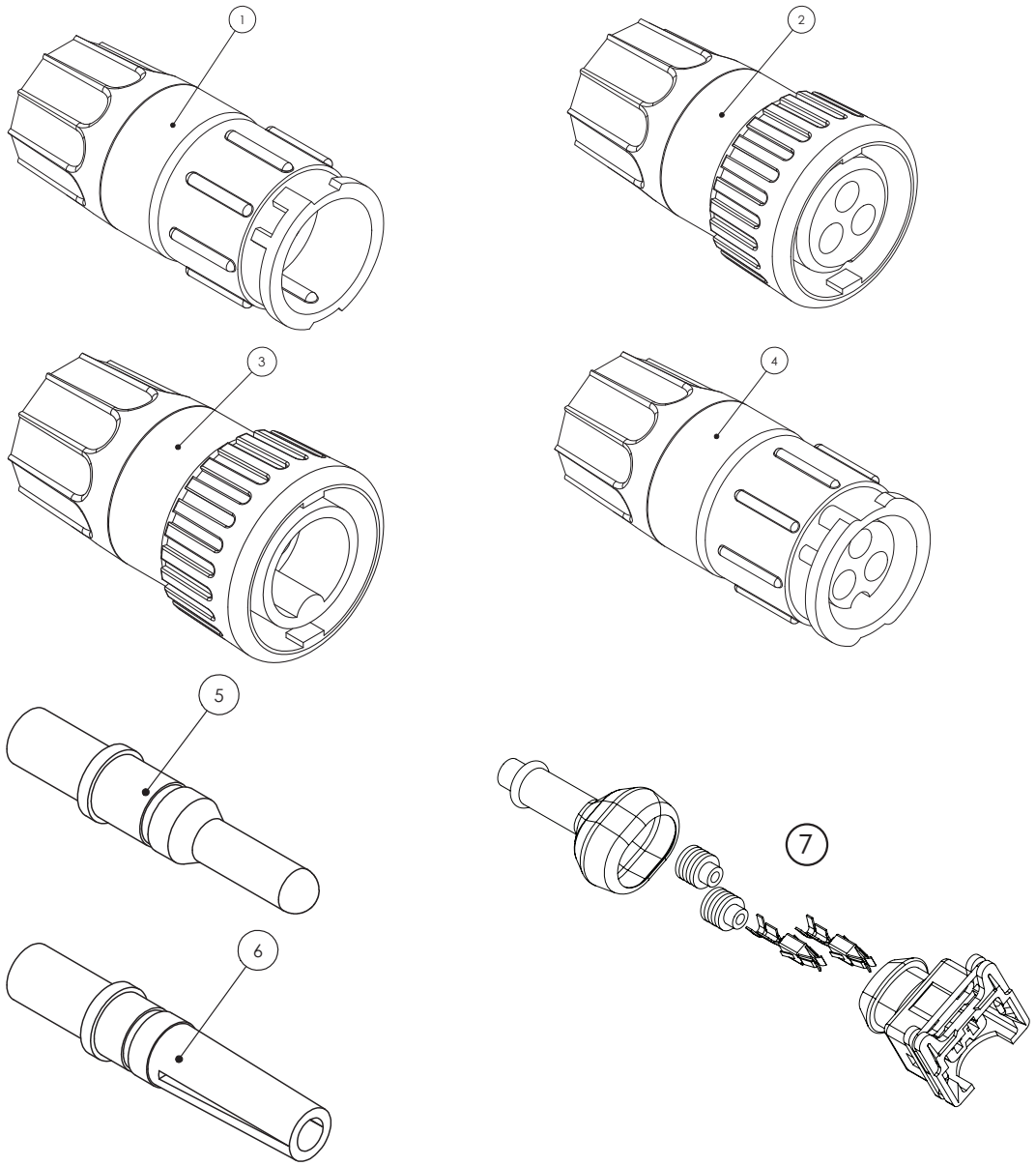

ITEM NO.	PART NUMBER	DESCRIPTION
1	GA5076921	Male Flow Meter Connector
2	GA5076922	Female Flow Meter Connector
3	GA5076920	Male Speed Sensor Connector
4	GA5076923	Female Speed Sensor Connector
5	GA5076927	Male Pin for Flow Meter & Speed Sensor Connectors
6	GA5076928	Female socket for Flow Meter & Speed Sensor Connectors
7	GA5047728	Plug, 2 pin, Black, fuel injector connector, IP65K, AMP
-	GA5068945	Connector, 3 Pin AMP super seal waterproof male

Electrical Connectors - AMP

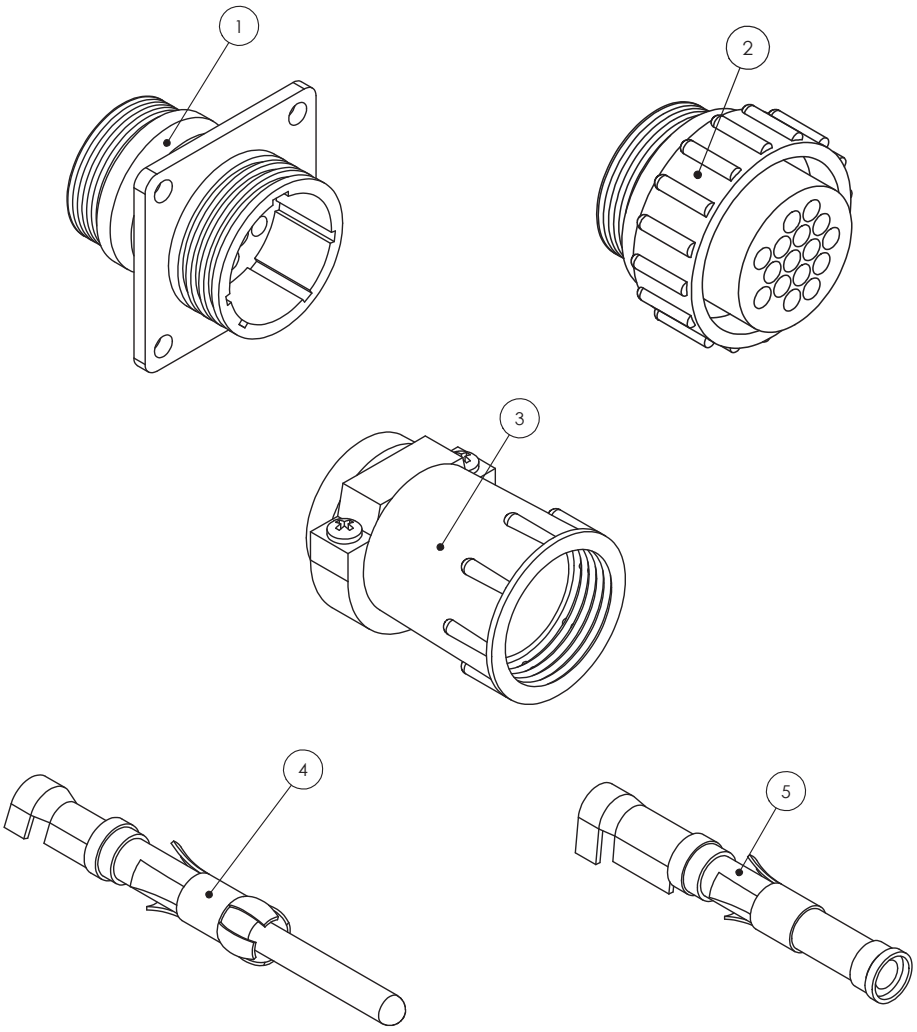

ITEM NO.	PART NUMBER	DESCRIPTION
1	GA5076924	Connector, 16 Pin AMP, Square Flange, Suit Male Pins, Raven
2	GA5076925	Connector, 16 Pin AMP, Suit Female Pins, Raven
3	GA5049175	Connector, Backing Shell, Suit 16 Pin AMP, Raven
4	GA5048905	Pin, 14-18 Gauge Gold, Male, Suit 16 Pin AMP
5	GA5048900	Pin, 14-18 Gauge Gold, Female, Suit 16 Pin AMP
-	GA5020785	Connector, 37 Pin AMP, Male, Raven
-	GA5020780	Connector, 37 Pin AMP, Female
-	GA5020560	Connector, Backing Shell 23, Suit 37 Pin AMP, Standard size
-	GA5020559	Connector, Backing Shell 23, Suit 37 Pin AMP, Large size
-	GA5020561	Connector Dust Cap, 37 Pin AMP, Male, Raven
-	GA5020575	Dust Cap, 16 Pin AMP Connector, Male
-	GA5075848	Dust Cap, 16 Pin AMP Connector, Female
-	GA5075927	DustCap 37 Pin Series 23 (4000 series Connector Dust Cap, 37 Pin AMP, Series 23, Raven

Electrical Connectors - Deutsch

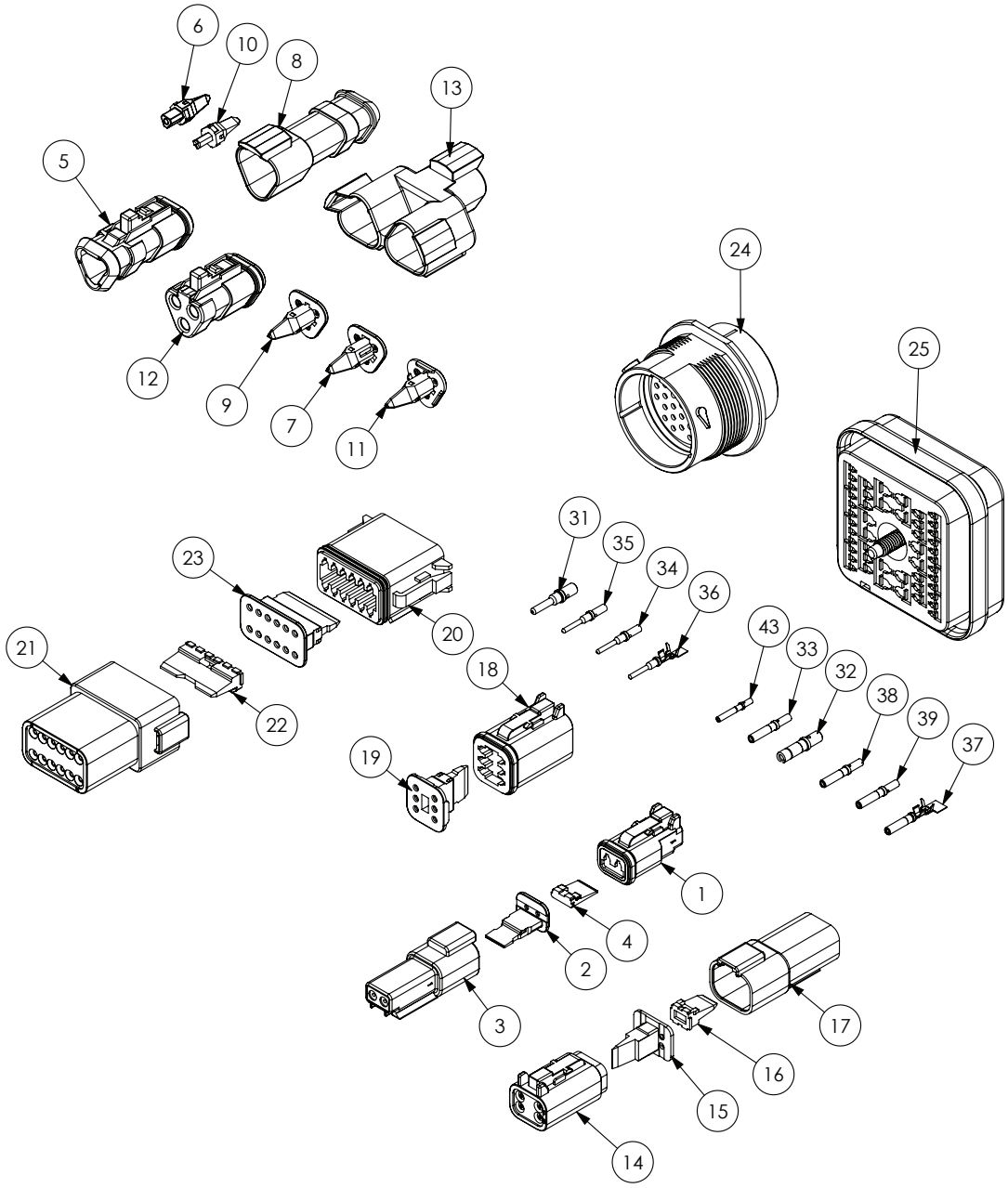

ITEM NO.	PART NUMBER	DESCRIPTION
1	GA5052820	Plug, 2 way, socket, DT series, Deutsch
2	GA5052825	Wedge Lock, 2 Way, sockets, DT series, Deutsch
3	GA5052830	Receptacle, 2 way, pins, DT series, Deutsch
4	GA5052835	Wedge Lock, 2 way, DT series, Deutsch
5	GA5011831	Plug, 3 way sockets, shrink boot adapter, Deutsch
6	GA5017719	Wedge lock, blue, 3 pin, suit terminator, Deutsch
7	GA5017721	Wedge lock, blue, 3 socket, Deutsch
8	GA5050740	Receptacle, 3 pin, shrink boot, Deutsch
9	GA5050750	Wedge Lock, orange, 3 socket, Deutsch

Continued over page

Electrical Connectors - Deutsch

ITEM NO.	PART NUMBER	DESCRIPTION
10	GA5050760	Wedge Lock, Green, 3 pin, Deutsch
11	GA5050761	Wedge Lock, Green, 3 socket, Deutsch
12	GA5054350	Plug, grey, 120 ohm resistor terminator, Deutsch
13	GA5054365	Receptacle, 3 way 3 Pin, Y splitter, Deutsch
14	GA5050840	Plug, 4 way socket, DT series, Deutsch
15	GA5050845	Wedge Lock, orange, 4 way sockets, Deutsch
16	GA5050765	Wedge Lock, Green, 4 Way pins, Deutsch
17	GA5013783	Receptacle, 4 way, pins, DT series Deutsch
18	GA5050960	Plug, 6 way Socket, DT series, Deutsch
19	GA5050965	Wedge Lock, orange, 6 way sockets, DT series, Deutsch
20	GA5061780	Plug, 12 way sockets, DT series, Deutsch
21	GA5061785	Receptacle, 12 way suit pins, DT series, Deutsch
22	GA5070590	Wedge lock, green, 12 way suit pins, Deutsch
23	GA5070595	Wedge lock, Green, 12 way sockets, Deutsch
24	GA5061790	Receptacle, 31 pin, HPD series, Deutsch
25	GA5060440	Plug, 48 suits Pins, DRB series, Deutsch
26	GA5060445	Wedge lock, 48 way suits Pins, DRB series, Deutsch
27	GA5060450	Flange connector, 48 way suits DRB series, Deutsch
28	GA5060455	Wedge lock, 48 way suit, Sockets, DRB series, Deutsch
29	GA5060460	Receptacle, 48 way suits Sockets, DRB series, Deutsch
30	GA5061170	Rubber boot, suit 48 pin DRB series, Deutsch
31	GA5061260	Pin, Male, Solid, nickel, Number 12, Deutsch
32	GA5061270	Socket, Female, Solid, Nickel, Number 12, Deutsch
33	GA5053235	Socket, Female, Nickel, number 14, Green Band, Deutsch
34	GA5061220	Pin, Male, Gold, Number 16, Deutsch
35	GA5061240	Pin, Male, solid, nickel, Number 16, Green band, AWG 14, Deutsch
36	GA5075255	Pin, Male, Nickel, Crimp style, Number 16, Deutsch
37	GA3000022	Socket, Female, Nickel, Crimp style, Number 16, Deutsch
38	GA5061225	Socket, Female, solid gold, number 16, Deutsch
39	GA5061230	Socket, Female, solid, Nickel, Number 16, Deutsch
40	GA5061235	Socket, solid gold, number 16, 16-20AWG, Deutsch
41	GA5061200	Pin, Male, Solid, nickel, Number 20, Deutsch
42	GA5061205	Pin, Male, Solid, gold, Number 20, Deutsch
43	GA5061210	Socket, Female, Solid, nickel, Number 20, Deutsch
44	GA5061215	Socket, Female, Solid, gold, Number 20, Deutsch
45	GA5052840	Sealing plug, White, size 12 - 16, Deutsch

Electrical Connectors - Weather Pack

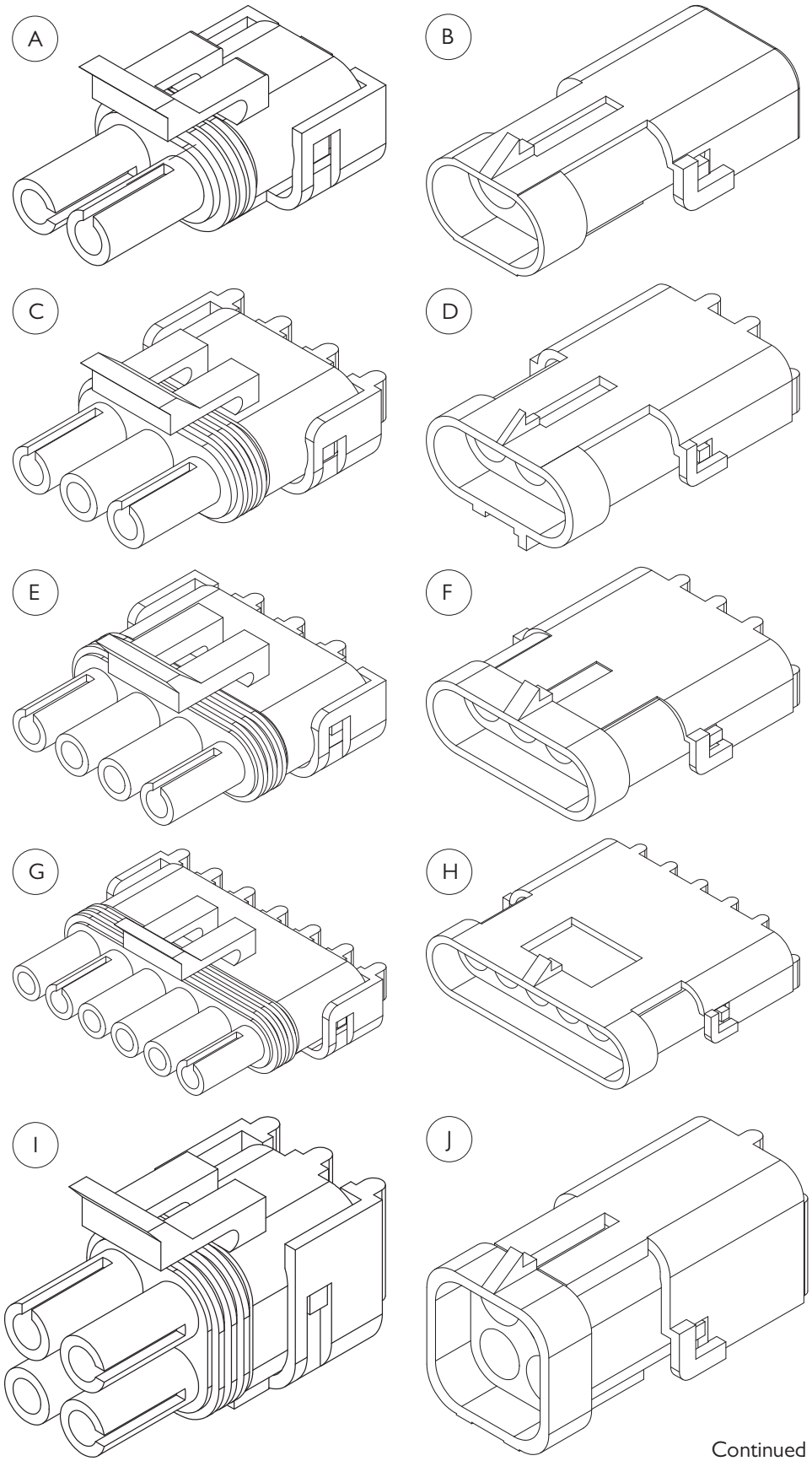

Continued over page

Electrical Connectors - Weather Pack

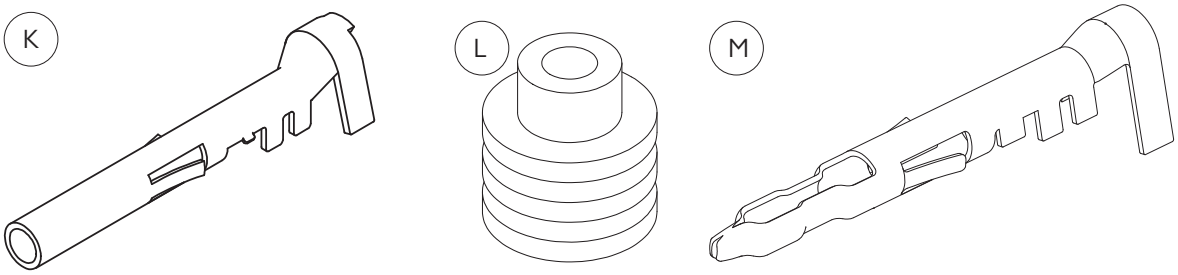

ITEM NO.	PART NUMBER	DESCRIPTION
-	GA5049685	Boot, Weather pack, Suit 2 pin connector
-	GA5049690	Boot, Weather pack, Suit 3 pin connector
A	GA5001351	Connector, Male, 2 Pin, Weather pack
B	GA5007381	Connector, 2 pin, Female, Weather pack
C	GA5002211	Connector, Male, 3 pin, Weather pack
D	GA5048550	Connector, Female, 3 Pin, Weather pack
E	GA5007385	Connector, Male, 4 pin, Weather pack
F	GA5007383	Connector, Female, 4 pin, Flat, Weather pack
G	GA5004009	Connector, Male, 6 pin, Weather pack
H	GA5048510	Connector, Female, 6 pin, Weather pack
I	GA5049000	Connector, Female, 4 pin, Square, Weather pack
J	GA5050805	Connector, Male, 4 pin, Square, Weather pack
K	GA5016619	Pin, Female, Sealed, Weather pack, Wire 1.0 - 2.0mm
L	GA5014857	Seal, Green, Weather pack connector, Wire from 2.03 - 2.85mm
M	GA5016617	Pin, Male, Sealed, Weather pack, Wire 1.0 - 2.0mm

Electrical Harnesses & Components

G SERIES HARNESS

PART NUMBER	DESCRIPTION
GA3000023	ECU Extension Harness
GA3000025	Electrical harness, Main side console
GA3000026	Battery lead kit
GA3000045	Electrical harness, variable fan control
GA3000048	Electrical harness, Boom recirculation add in module suit trimble
GA3000051	Electrical harness, cabin power supply
GA3000053	Electrical harness, side dash, arm rest
GA3000094	Main Chassis Loom
GA5060033	Fuse box, Main control, Cabin
GA5060044	Electrical Harness, Engine monitor
GA5060052	Loom Chassis hydraulics
GA5060066	Loom SWB SP Tail light connection

RAVEN 4400 SYSTEM

PART NUMBER	DESCRIPTION
GA3000027	Loom Chassis suit SWB CC with Raven 4400
GA5076204	Electrical Harness, Console SCS 4400 13.5', Raven

RAVEN RCM SYSTEM

PART NUMBER	DESCRIPTION
GA3000361	Diode 4 Bank, Suit RCM Boom Harness, Raven
GA3000251	Terminator, CAN, active, suit ISO bus, Raven
GA3000258	Electrical Harness, RCM, 16 section 3 Tier, Boom Center
GA3000264	Electrical Harness, RCM, 16 section 3 Tier, Breakout
GA3000259	Electrical Harness, Boom Inner 36-48m, 16 Section , 2 Tier
GA3000269	Electrical Harness, Boom Outer 36-48m, 16 Section , 2 Tier
GA3000260	Electrical Harness, Boom Inner 36-48m, 16 Section , 1 Tier
GA3000270	Electrical Harness, Boom Outer 36-48m, 16 Section , 1 Tier

JOHN DEERE SYSTEM

PART NUMBER	DESCRIPTION
GA3000138	Electrical harness, main ISO side console armrest
GA3000141	Electrical harness, steering valve cable
GA3000142	Electrical harness, Roof cable extension
GA3000144	Sensor, Linear non contact, Steering, 250mm
GA3000145	Rose end, M10 suit GA3000144
GA3000146	Stud end, M10 suit GA3000144
GA3000147	Electrical harness, JD autotrack node
GA3000148	Electrical harness, JD Starfire roof adapter
GA3000156	Electrical harness, JD Greenstar cable

Continued over page

Electrical Harnesses & Components

ISOBUS SYSTEM

PART NUMBER	DESCRIPTION
GA3000030	Terminator, CAN, active, suit ISO bus, Raven
GA3000031	Electrical harness, Raven ISO to CAN active terminator, Raven
GA3000032	Electrical harness, Foot switch assembly, ISO bus, Raven
GA3000033	Electrical harness, Foot switch extension, ISO bus, Raven
GA3000043	Electrical harness, 4400 chassis to ISO bus node, Raven
GA3000062	Electrical harness, Raven ISO to Trimble FMX/FM1000 display
GA3000085	Electrical harness, Cabin IBBC ISO bus connector to John Deere
GA3000138	Electrical harness, main ISO side console armrest, MY17, Raven
GA5071325	Switch box, 6 section, ISO BUS, Raven
GA5071350	Electrical harness, Can Power ISO switch box suit JD, Raven
GA5071380	Node, ECU ISO BUS CAN, Product controller, Raven
GA5071390	Electrical harness, ISO hitch cable to suit Raven ISO ECU 14’
GA5076953	Pressure Transducer, 0-250PSI, Sealed, Raven

NORAC SYSTEM

PART NUMBER	DESCRIPTION
GA3000111	Controller module, UC5 Input pass through, Norac
GA3000112	Controller module, UC5 Valve, Norac
GA3000113	Controller module, UC5, CAN Bus, Norac
GA3000114	Electrical Harness, UC5 Battery feed fused, Norac
GA3000116	Electrical Harness, UC5 Network, 1M, 14 AWG, Norac
GA3000117	Electrical Harness, UC5 Network, 10M, 14 AWG, Norac
GA3000120	Electrical Harness, UC5 Valve 2 pin DT, Norac
GA3000121	Electrical Harness, UC5, Main Interface Goldacres, Open center, Norac
GA3000122	Electrical Harness, UC5, Tilt Interface Goldacres, Norac
GA3000123	Network Coupler, UC5, 2 way, Black, Norac
GA3000124	Network Coupler, UC5, 2 way, white, terminator, Norac
GA3000125	Network Coupler, UC5, 3 way, Norac
GA3000126	Network Coupler, UC5, 8 way, Norac
GA3000127	Sensor, Linear position NF, UC5, Norac
GA3000128	Ultrasonic sensor, UC5, Norac
GA3000129	Connector, Plug, UC5 Network, 6 Pin, Norac
GA3000130	Connector, Plug, UC5 Network, 2 Pin, Norac
GA3000136	Linear Sensor, 175mm Stroke, Connector Fitted
GA3000138	Electrical harness, main ISO side console armrest
GA3000139	Electrical harness, ISO hitch cable to suit ISO ECU 6’, Raven
GA3500137	Hydraulic fitting kit, 12 parts, GN1, Norac
GA5075480	Bracket, Linear position sensor mount, Norac
GA5075490	Mounting bracket, suit ultra sonic sensor, low profile, Norac
GA8700394	Manual, installation, UC5 Goldacres active wing roll, Norac
GA8700396	Manual, Norac UC5 operators manual

Chapter 16

SCHEMATICS

Plumbing - Boom Valves Optioned

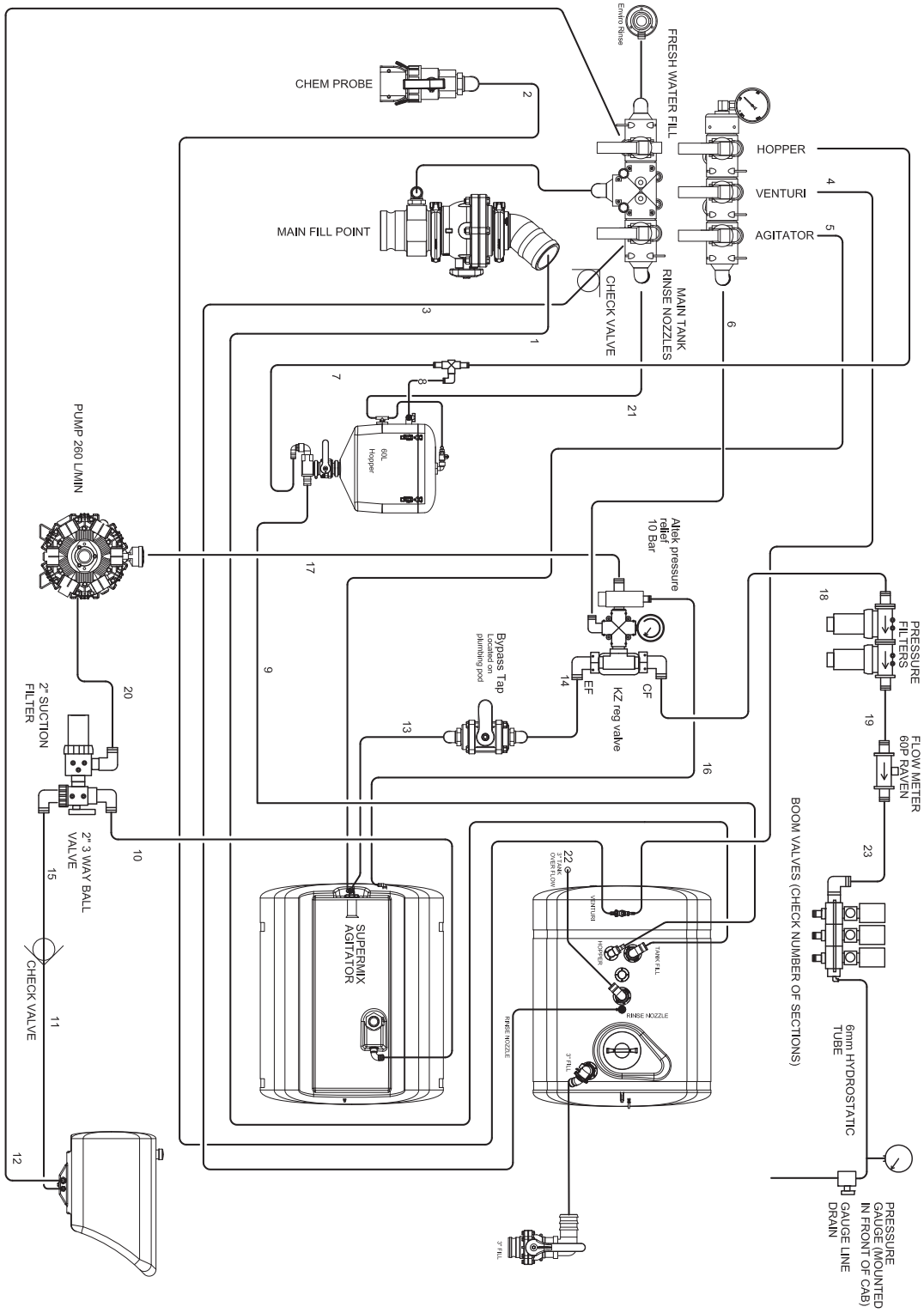

Plumbing - RapidFire Optioned

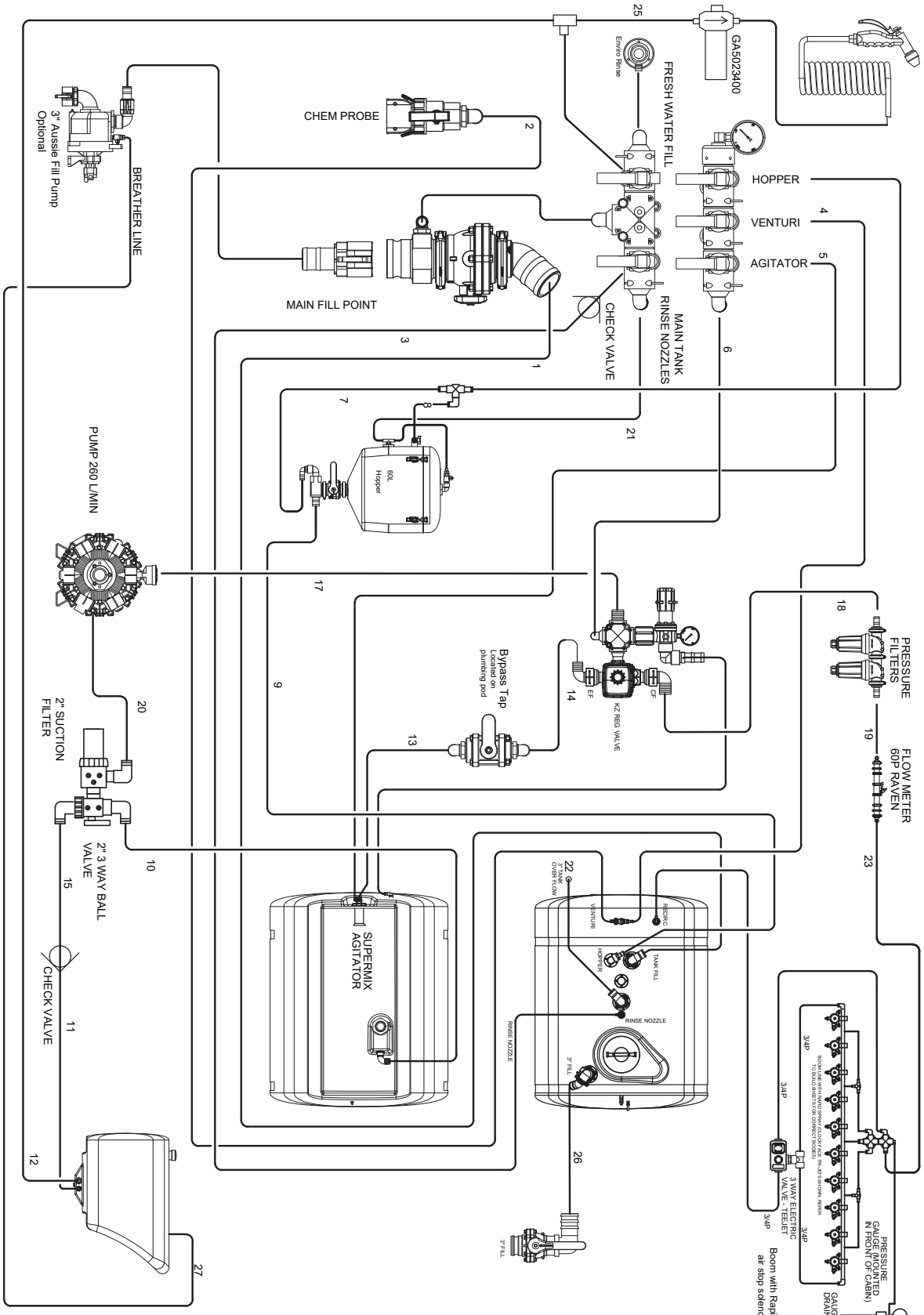

Pneumatics

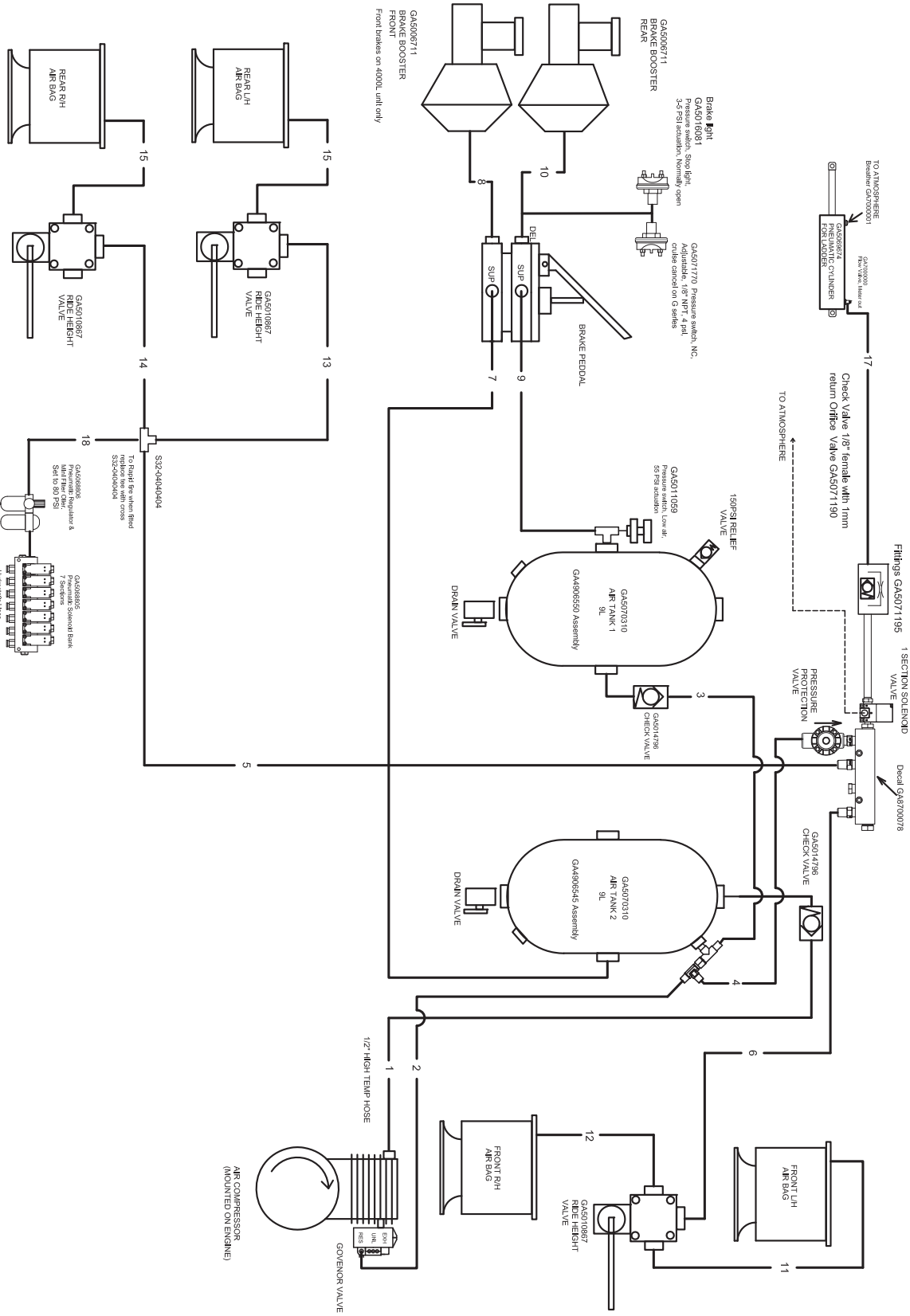
TO ATMOSPHERE
Breather GA7000001
GA7000001
Flow Valve, Meter out
GA5000074
PNEUMATIC CYLINDER
FOR LADDER
17
Check Valve 1/8" female with 1mm
return Orifice Valve GA5071190
TO ATMOSPHERE
Fittings GA5071195
GA5071235
1 SECTION SOLENOID
VALVE
Decal GA8700078
PRESSURE
PROTECTION
VALVE
GA5014796
CHECK VALVE
GA5014796
CHECK VALVE
GA5070310
AIR TANK 2
9L
GA4906545 Assembly
DRAIN VALVE
4
6
1/2" HIGH TEMP HOSE
1
2
12
FRONT R/H
AIR BAG
GA5010867
RIDE HEIGHT
VALVE
FRONT L/H
AIR BAG
11
AIR COMPRESSOR
(MOUNTED ON ENGINE)
GOVENOR VALVE
3
GA5014796
CHECK VALVE
GA5011059
Pressure switch, Low air,
55 PSI actuation
150PSI RELIEF
VALVE
GA5070310
AIR TANK 1
9L
GA4906550 Assembly
DRAIN VALVE
5
S32-04040404
To Rapid fire when fitted
replace line with cross
S32-04040404
GA5071770 Pressure switch, NC,
Adjustable, 1/8" NPT, 4 psi,
cruise cancel on G series
BRAKE PEDDAL
SUP
DEL
SUP
7
9
8
10
Brake light
GA5016081
Pressure switch, Stop light,
3-5 PSI actuation, Normally open
GA5006711
BRAKE BOOSTER
REAR
GA5006711
BRAKE BOOSTER
FRONT
Front brakes on 4000L unit only
REAR L/H
AIR BAG
REAR R/H
AIR BAG
15
15
13
14
GA5010867
RIDE HEIGHT
VALVE
GA5010867
RIDE HEIGHT
VALVE
18
GA5068805
Pressure Regulator &
Mini Filter Oiler,
Set to 80 PSI
GA5068805
Pressure Solenoid Bank
7 Sections
Hydraulic Lines
To Nozzles

Hydraulics - Trimble AutoSteer

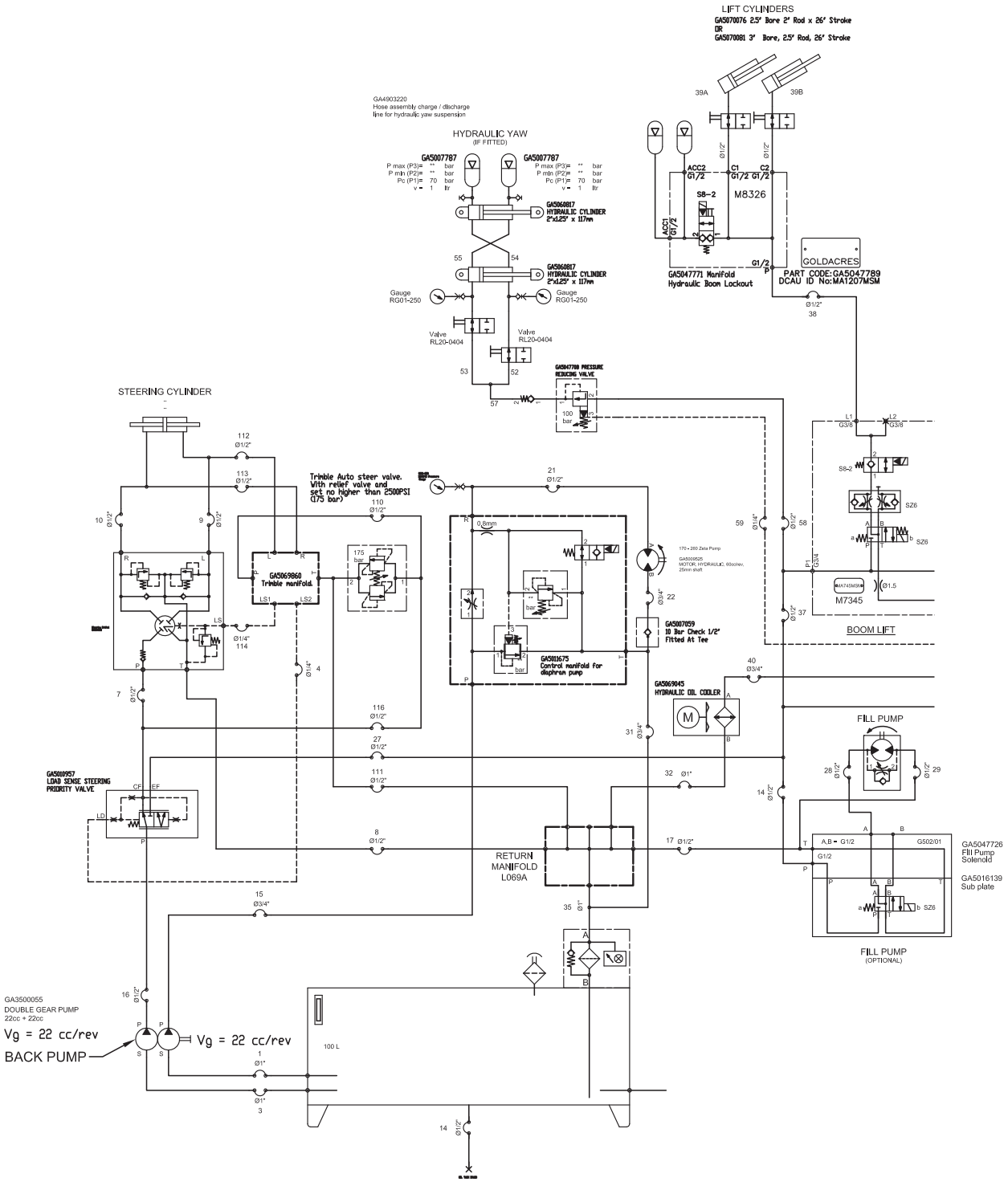

Continued over page

Hydraulics - Trimble AutoSteer

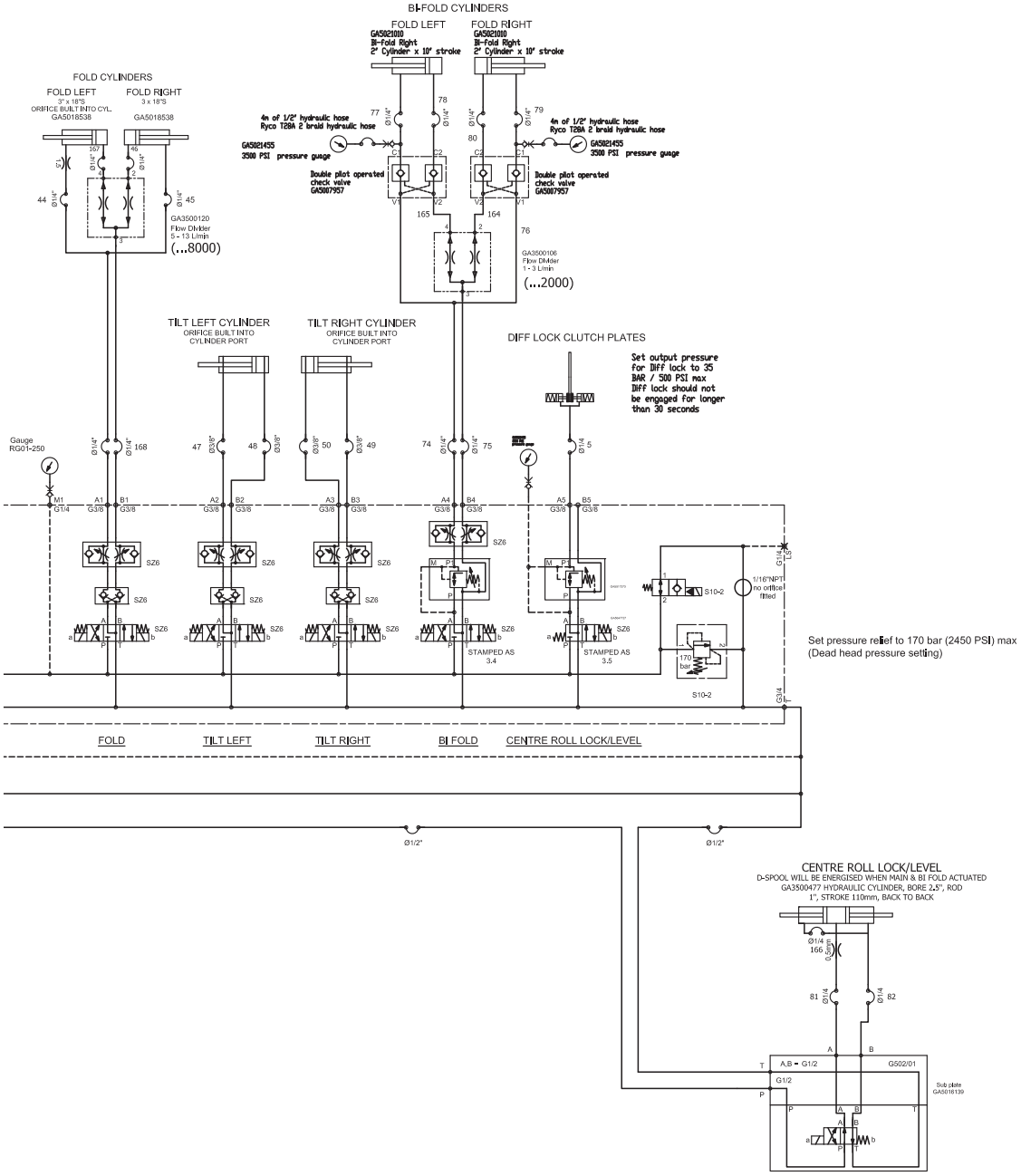

Hydraulics - Trimble AutoSteer - Adjustable Axle

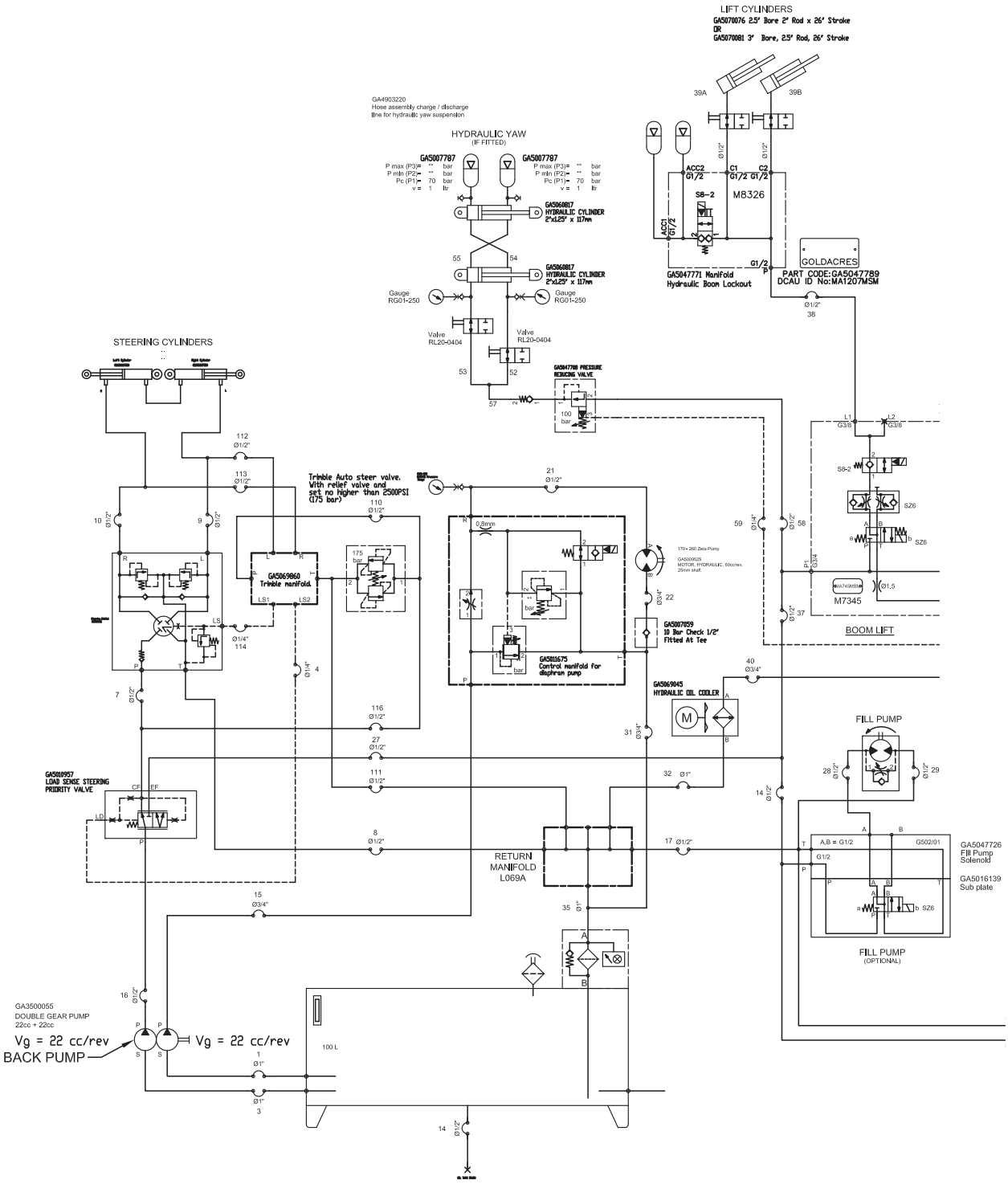

Continued over page

Hydraulics - Trimble AutoSteer - Adjustable Axle

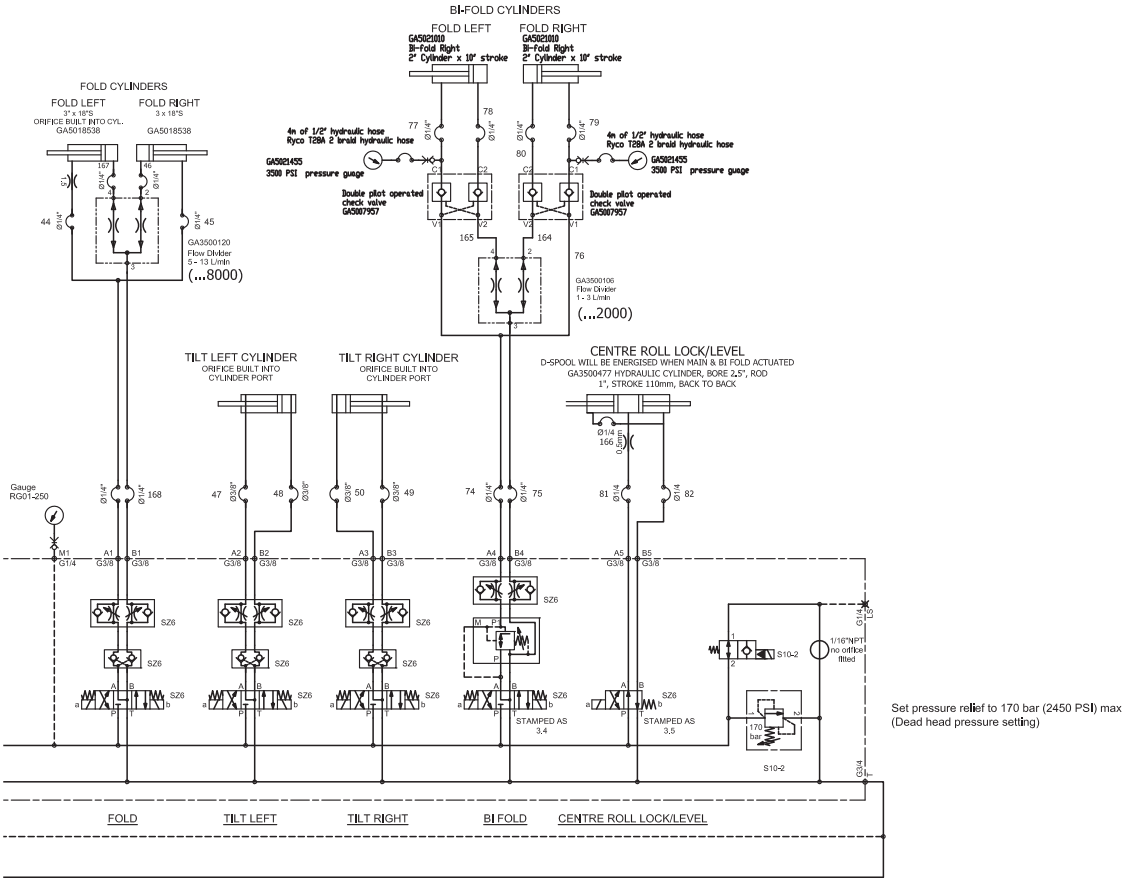

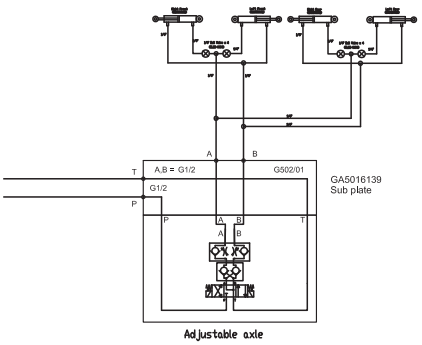

Hydraulics - John Deere Steering

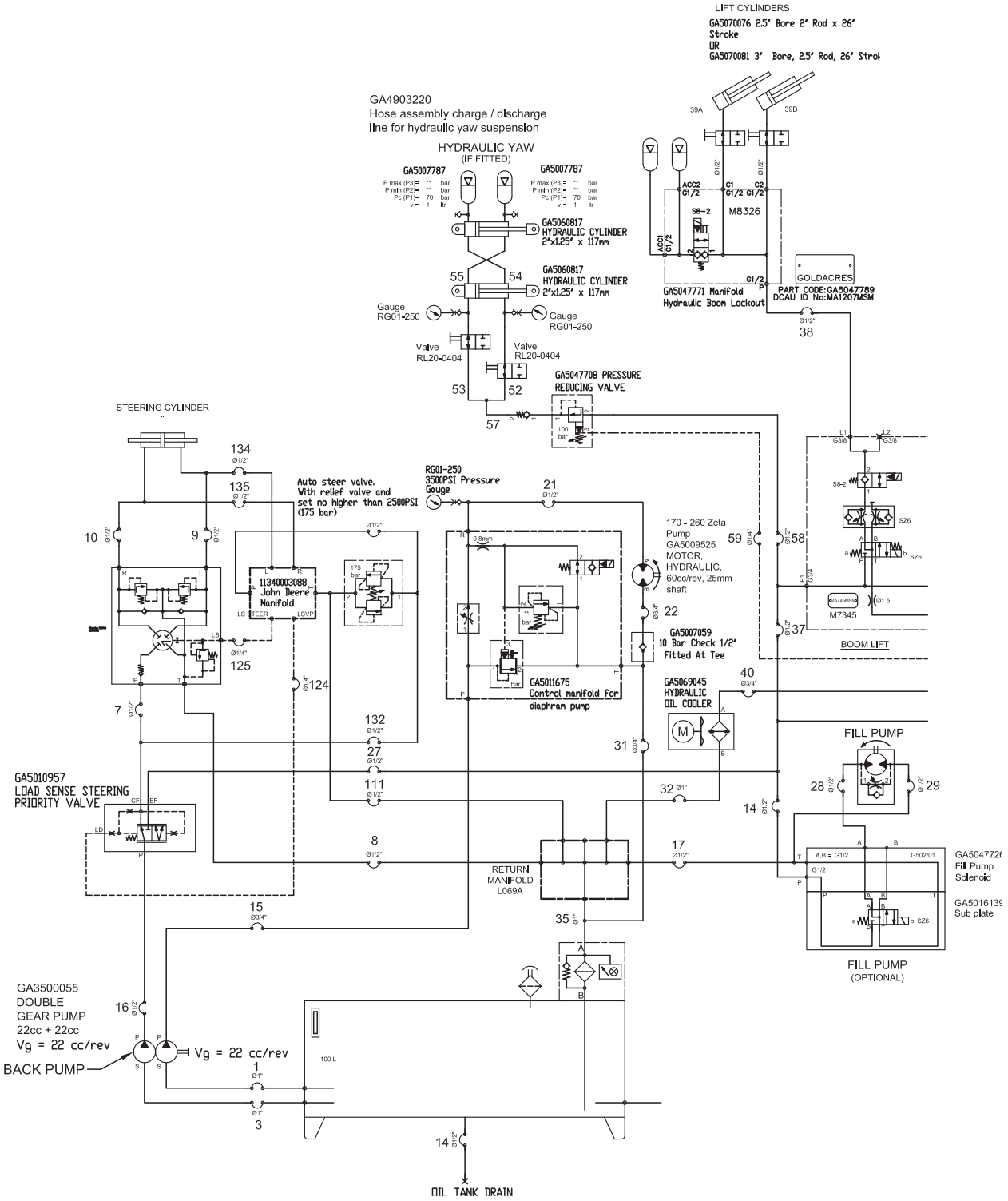

Continued over page

Hydraulics - John Deere Steering

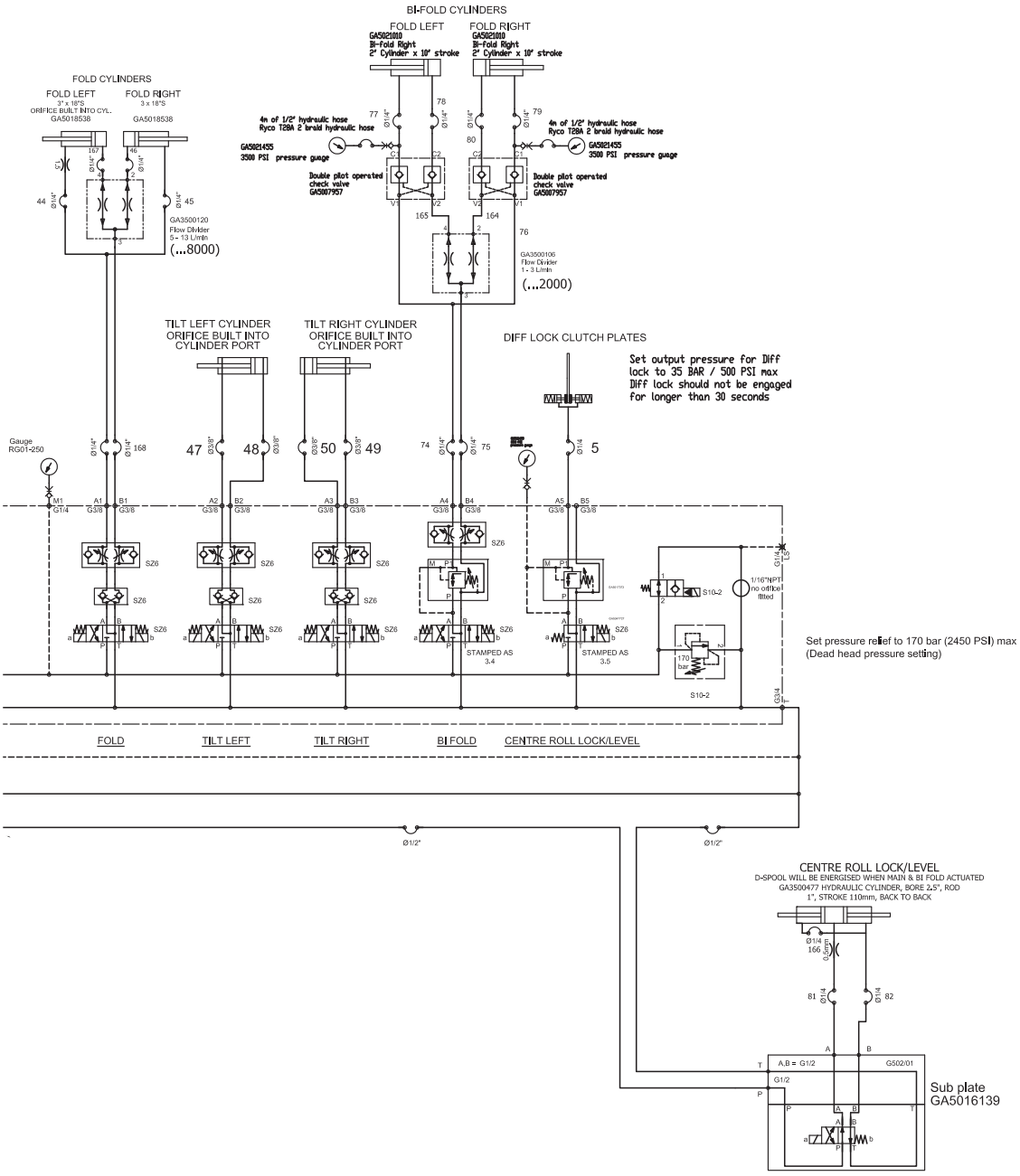

Hydraulic Hoses - Cab Chassis

HOSE No.	HOSE LENGTH	HOSE END 1	HOSE END 2	DESCRIPTION	ORIENTATION	HOSE P/N
1" HOSE						
1	720mm	90Deg (T205-1616)	90Deg (T205-1616)	oil tank rear to 22cc pump		GA3500023
3	660mm	90Deg (T205-1616)	90Deg (T226-1616)	oil tank front 22cc pump		GA3500059
32	3820mm	45 deg (T227-1616)	Straight (T202-1616)	Oil cooler to return manifold		GA3500025
35	1780mm	Straight (T202-1616)	Straight (T202-1616)	tank return to return manifold		GA3500026
1/4" BLACK HOSE						
4 (only if NO auto steer block)	570mm	45Deg (T227-0404)	Straight (T202-0404)	load sense priority valve to orbital		GA3500027
5	3785mm	STRAIGHT (T202-0404)	STRAIGHT (T202-0404)	DIFF LOCK		GA3500577
1/2" BLACK HOSE						
7	710mm	90 Deg (T226-0808)	straight (T202-0808)	priority valve to orbital		GA3500029
8	540mm	90 Deg (T226-0808)	straight (T202-0808)	steering orbital to return manifold		GA3500030
9	2060mm (3M Axle)	90Deg Lng (T226-0808)	90Deg Lng (T226-0808)	Orbital Right to Left Port steer Ram		GA3500032
10	2460mm (3M Axle)	90Deg Lng (T226-0808)	90Deg Lng (T226-0808)	Orbital Left to Right Port steer Ram		GA3500031
14	1200mm	90 Deg (T226-0808)	Straight (T201-0808) Swivel Cap (S59-08)	Drain Hose Hydraulic Reservoir		GA3500100
15	3870mm	90 DEG (T226-0808)	90 Deg (T205-0808)	Diaphram pump control		GA3500033
16	4270mm	90 DEG (T226-0808)	90 Deg (T205-0808)	Priority valve		GA3500034
18	1820mm	45 Deg (T227-0808)	Straight (T202-0808)	trans cooler to Transmission		GA3500035
19	1250mm	Straight (T202-0808)	Straight (T202-0808)	transmission to trans cooler		GA3500036
21	2670mm	90 Deg (T205-0808)	90 DEG (T205-0808)	speed control (R) to diaphram pump		GA3500037
22	2480mm	90 Deg (T205-0808)	90 DEG (T205-0808)	diaphram pump to speed control (T)		GA3500038
23	400mm	45 Deg (T227-0808)	Straight (T201-0808)	Diff Drain, JCB Diff, 2m & 3m Fixed Axles		GA3500022
FILL PUMP HOSES						
27	795mm	90 Deg (T226-0808)	90 Deg (T205-0808)	Pressure to EF on Priority valve		GA3500066
28	590mm	90 Deg (T226-0808)	90 Deg (T205-0808)	sub manifold to banjo pump press	45°	GA3500067
29	740mm	90 Deg (T205-0808)	90 Deg (T205-0808)	sub manifold to banjo pump return		GA3500068
30	1120mm	90 Deg (T205-0808)	Straight (T202-0808)	sub manifold to return manifold		GA3500069
3/4" BLACK HOSE						
31	2550mm	90 Deg (T205-1212)	Straight (T202-1212)	speed control to return filter		GA3500039

Continued over page

Hydraulic Hoses - Cab Chassis

HOSE No.	HOSE LENGTH		HOSE END 1	HOSE END 2	DESCRIPTION	ORIENTATION	HOSE P/N
TRIMBLE AUTO STEER HOSE KIT (ONLY SUPPLY IF AUTO STEER VALVE IS OPTIONED)							
110	1/2" HOSE	650mm	90 Deg (T205-0808)	Straight (T202-0808)	Pressure Orbital to Trimble pressure		GA3500040
111	1/2" HOSE	300mm	Straight (T202-0808)	90 Deg (T205-0808)	Trimble tank line to return manifold		GA3500041
112	1/2" HOSE	930mm	90 Deg (T205-0808)	Straight (T202-0808)	Orbital Left to Trimble Block A		GA3500042
113	1/2" HOSE	905mm	90 Deg (T205-0808)	Straight (T202-0808)	Orbital Right to Trimble Block B		GA3500043
114	1/4" HOSE	2490mm	45 Deg Lng (T227-0404)	90° Lng JIC (T207-0409) GA3500003	Trimble load sense 1 to orbital load sense		GA3500044
115	1/4" HOSE	1845mm	90° JIC (T207-0409) GA3500003	STRAIGHT (T202-0404)	TRIMBLE LOAD SENSE 2, PRIORITY VALVE LOAD SENSE		GA3500579
116	1/2" HOSE	200mm	90Deg (T205-0808)	Straight (T202-0808)	block to relief valve		GA4904895
JOHN DEERE AUTO STEER HOSE KIT (RAVEN)							
131	1/2" HOSE	110mm	90Deg Long (T226-0808)	Straight (T202-0808)	block to relief valve		GA5067971
132	1/2" HOSE	425mm	90Deg (T205-0808)	Straight (T202-0808)	Pressure Hose		GA3500070
133	1/2" HOSE	340mm	90 Deg Lng (T205-0808)	Straight (T202-0808)	Return Hose		GA3500071
134	1/2" HOSE	700mm	90 Deg (T226-0808)	Straight (T202-0808)	Left to A on block		GA3500072
135	1/2" HOSE	760mm	Straight (T202-0808)	90 Deg Lng (T205-0808)	Right to B on block		GA3500073
136	1/4" HOSE	2270mm	48 Deg (T227-0404)	Straight (T202-0404)	steering orbital to block		GA3500074
137	1/4" HOSE	1750mm	90Deg (T205-0404)	Straight (T202-0404)	priority valve to block		GA3500075
AUTO FARM AUTO STEER HOSE KIT							
	1/4" HOSE	715mm	90Deg (T205-0404)	Straight (T202-0404)	LS OUT to Priority Valve		GA
	1/4" HOSE	1545mm	Straight (T202-0404)	Straight (T202-0404)	LS Orbital to Orbital		GA
	1/2" HOSE	1290mm	90 Deg Lng (T226-0808)	Straight (T202-0808)	Tank Line		GA
	1/2" HOSE	720mm	90 Deg (T205-0808)	Straight (T202-0808)	Pressure Line		GA
	1/2" HOSE	1515mm	Straight (T202-0808)	Straight (T202-0808)	Right to Right		GA
	1/2" HOSE	1470mm	Straight (T202-0808)	Straight (T202-0808)	Left to Left		GA
ADJUSTABLE AXLE 2-3m							
151	1/2" HOSE	830mm (1R)	90 Deg (T205-0808)	90 Deg (T205-0808)	Priority valve (EF) to pressure on axle spool valve		GA
152	1/2" HOSE	2320mm (2R)	90 Deg (T205-0808)	90 Deg (T205-0808)	Return manifold to tank on axle spool valve		GA
153	1/4" HOSE	3880mm (1B)	90 Deg (T205-0404)	Straight (T202-0404)	A on axle spool block to taps on rear axle		GA
154	1/4" HOSE	3860mm (2B)	90 Deg (T205-0404)	Straight (T202-0404)	B on axle spool block to rear axle		GA
155	1/4" HOSE	2800mm(1R1B)	90 Deg (T205-0404)	Straight (T202-0404)	A on axle spool block to taps on front axle		GA
156	1/4" HOSE	2630mm(2R1B)	90 Deg (T205-0404)	Straight (T202-0404)	B on axle spool block to front axle		GA
157	1/2" HOSE	1035mm (1Y)	90 Deg (T226-0808)	90 Deg (T226-0808)	Steering - Crossover hose		GA
158	1/2" HOSE	1630mm (2Y)	90 Deg (T226-0808)	90 Deg (T226-0808)	Steering - Left on orbital to left side of axle		GA
159	1/2" HOSE	1115mm (3Y)	90 Deg (T226-0808)	90 Deg (T226-0808)	Steering - Right on orbital to right side of axle		GA
160	1/2" HOSE	800mm(1Y 1R) x2	45 Deg (T227-0808)	Straight (T202-0808)	Steering - Crossover to solid end of ram		GA
161	1/2" HOSE	1055mm(1Y 2R) x2	45 Deg (T227-0808)	Straight (T202-0808)	Steering - Orbital from L & R to rod end of ram		GA

Hydraulic Hoses - Sprayer

HOSE No.	HOSE LENGTH	HOSE END 1	HOSE END 2	DESCRIPTION	ORIENTATION	HOSE P/N
SPOOL VALVE AND LIFT HOSES						
37	6760mm	90Deg (T205-0808)	Straight (T202-0808)	Pressure to spool valves		GA3500052
38	2930mm	45Deg (T227-0808)	Straight (T202-0808)	Spool valve to accumulator		GA3500053
39A	2000mm	90Deg (T205-0808)	Straight (T202-0808)	Accumulator to Lift Cylinder		GA4905077
39B	2200mm (1B)	90Deg (T205-0808)	Straight (T202-0808)	Accumulator to Lift Cylinder		GA4905078
40	3350mm	90° (T205-1212)	STRAIGHT (T202-1212)	SPOOL VALVE, RETURN HOSE		GA3500578
FOLD HOSES						
44	3425mm (1R)	90°(T205-0404)	STRAIGHT (T202-0404)	SPOOL BLOCK A, RIGHT FOLD CYLINDER ROD END		GA3500572
45	3725mm (2R)	90°(T205-0404)	STRAIGHT (T202-0404)	SPOOL BLOCK A, LEFT FOLD CYLINDER ROD END		GA3500573
46	2870mm (3R)	STRAIGHT (T202-0404)	STRAIGHT (T202-0404)	FLOW DIVIDER 2, RIGHT FOLD CYLINDER BASE END		GA3500574
167	2885mm (4R)	STRAIGHT (T202-0404)	STRAIGHT (T202-0404)	FLOW DIVIDER 4, LEFT FOLD CYLINDER BASE END		GA3500575
168	440mm (1B)	STRAIGHT (T202-0404)	STRAIGHT (T202-0404)	SPOOL BLOCK B, FLOW DIVIDER 3, FOLD CYLINDERS		GA3500576
Tilt Hoses						
47	1480mm (1Y)	90° Elbow (T207-0609)	Straight (T204-0609)	Left Tilt 1 (Tilt cylinder LH rod end)		GA3500447
48	1140mm (2Y)	Straight (T204-0609)	Straight (T204-0609)	Left Tilt 2 (Tilt cylinder LH base end)		GA3500448
49	1400mm (1B)	90° Elbow (T207-0609)	Straight (T204-0609)	Right Tilt 1 (Tilt cylinder RH rod end)		GA3500449
50	1030mm (2B)	Straight (T204-6409)	Straight (T204-0609)	Right Tilt 2 (Tilt cylinder RH base end)		GA3500450
YAW HOSES						
51	1500mm (1Y)	45 Deg (T227-0404)	straight (T202-0404)	Yaw Hose 1		GA5067285
52	555mm (2Y)	45 Deg (T227-0404)	Straight (T202-0404)	Yaw Hose 2		GA5067133
53	785mm (1B)	45 Deg (T227-0404)	Straight (T202-0404)	Yaw Hose 3		GA5067134
54	1680mm (2B)	90 Deg (T205-0404)	Straight (T202-0404)	Yaw Hose 4		GA5067132
55	1680mm (1R)	90 Deg (T205-0404)	Straight (T202-0404)	Yaw Hose 5		GA4903200
56	1140mm	90 Deg (T205-0808)	Straight (T202-0808)	Yaw Hose 6		GA5067136
57	560mm	90 Deg (T205-0808)	Straight (T202-0808)	Yaw Hose 7		GA5067137
58	830mm (2B,1R)	90 Deg (T205-0808)	Straight (T202-0808)	Pressure to Yaw Block		GA5067275
58B NDRAC	780mm (2B,1R)	90 Deg (T205-0808)	Straight (T202-0808)	Pressure to Yaw Block		
59	720mm (2B,2R)	Straight (T202-0808)	90 Deg (T205-0808)	Tank to Yaw Block		GA5067276
ULTRAGLIDE HOSES						
60	1040mm (1Y)	90 Deg (T226-0404)	Straight (T202-0404)	LV Hose		GA5067148
61	1265mm (2Y)	90 Deg (T226-0404)	Straight (T202-0404)	LT Cyl Return to Spool Valve		GA5067142
62	1130mm (3Y)	90 Deg (T226-0404)	Straight (T202-0404)	RV Hose		GA5067143
63	1495mm (1B)	90 Deg (T226-0404)	Straight (T202-0404)	RT Cyl Return to Spool Valve		GA5067141
64	1495mm (2B)	90 Deg (T226-0404)	Straight (T202-0404)	LC Hose		GA5067138
65	1355mm (3B)	90 Deg (T226-0404)	Straight (T202-0404)	RC Hose		GA5067139
66	1250mm (3R)	90 Deg (T226-0404)	Straight (T202-0404)	Lf Cyl Return to block		GA5067094
67	1360mm (4R)	90 Deg (T226-0404)	Straight (T202-0404)	RT Cyl return to block		GA5067149
68	710mm (1Y,1R)	90 Deg (T205-0808)	Straight (T202-0808)	Spool valve P to ultraglide EF		GA5067147
69	560mm (2Y,2R)	Straight (T202-0808) no Yaw	Straight (T202-0808)	Spool valve T to ultraglide T Use hose when no Yaw fitted		GA5067144
104	560mm (2Y,2R)	90 Deg (T205-0808) with Yaw	Straight (T202-0808)	Spool valve T to ultraglide T Use hose when Yaw is fitted		GA4905042

Continued over page

Hydraulic Hoses - Sprayer

HOSE No.	HOSE LENGTH	HOSE END 1	HOSE END 2	DESCRIPTION	ORIENTATION	HOSE P/N
BI-FOLD HOSES						
70	3890mm	90Deg (T205-0404)	Straight (T202-0404)	Bi fold Hose		GA3500076
71	3580mm (1B)	90Deg (T205-0404)	Straight (T202-0404)	Bi fold hose		GA3500077
72	4740mm (1B)	90 Deg (T226-0808)	Straight (T202-0808)	Right Hand Gauge		GA3500078
73	4640mm (1?)	90 Deg (T226-0808)	Straight (T202-0808)	Left Hand Gauge		GA3500079
74	835mm (1B,1Y)	90°(T205-0404)	90°(T205-0404)	SPOOL VALVE A, DOUBLE PILOT CHECK VALVE V1		GA3500566
75	585mm (2B,1Y)	45°(T227-0404)	90°(T205-0404)	SPOOL VALVE B, FLOW DIVIDER 3, BI-FOLD		GA3500567
76	300mm x 1	STRAIGHT (T202-0404)	STRAIGHT (T202-0404)	BI-FOLD LINK HOSE		GA5067131
164	235 (1B, 1R)	45°(T227-0404)	90°(T205-0404)	FLOW DIVIDER 2, FRONT DOUBLE PILOT CHECK VALVE V2, BI-FOLD		GA3500568
165	275 (2B, 1R)	45°(T227-0404)	90°(T205-0404)	FLOW DIVIDER 4, BACK DOUBLE PILOT CHECK VALVE V2, BI-FOLD		GA3500569
77	5045mm (1Y)	90° (T226-0404)	STRAIGHT (T202-0404)	BI-FOLD RV1		GA3500580
78	4970mm (2Y)	90° (T226-0404)	STRAIGHT (T202-0404)	BI-fold RV2		GA3500581
79	4900mm (1B)	90° (T226-0404)	STRAIGHT (T202-0404)	BI-fold LV1		GA3500582
80	5020mm (2B)	90 Deg (T226-0404)	Straight (T202-0404)	LV2		GA5067271
CENTRE LEVEL HOSES						
81	1170mm (1Y)	90°(T205-0404)	STRAIGHT (T202-0404)	SPOOL BLOCK A, CYLINDER CENTRE PORT		GA3500570
82	1250mm	STRAIGHT (T202-0404)	STRAIGHT (T202-0404)	SPOOL BLOCK B, CYLINDER ROD END		GA4905082
166	225mm	90°(T205-0404)	STRAIGHT (T202-0404)	LINK HOSE		GA3500571

Hydraulic Transmission Cooler Lines

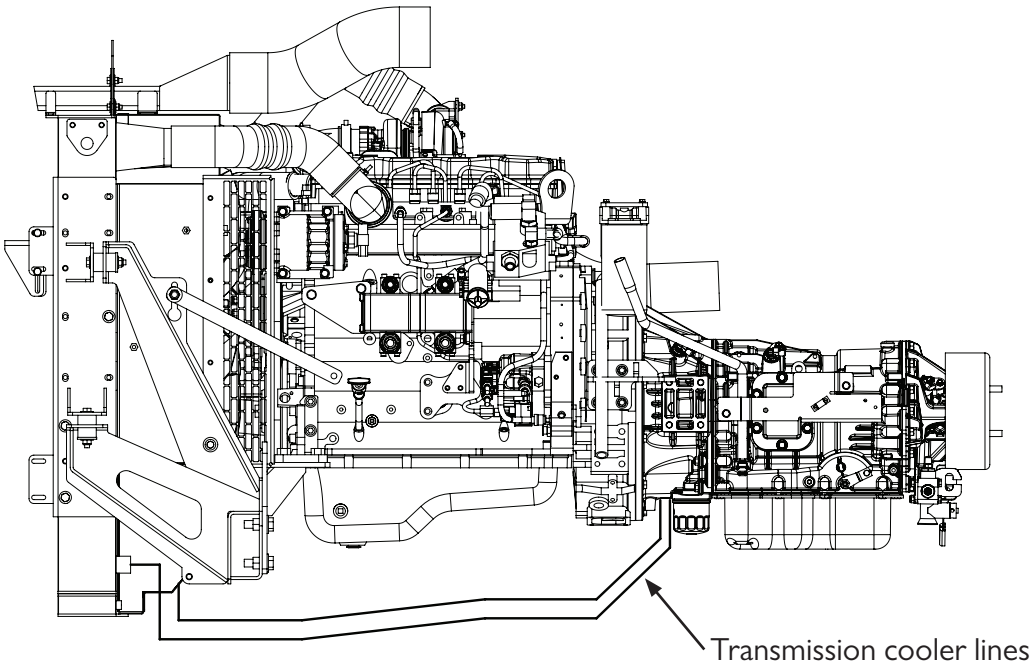

Cooler Package

DECALS

Decals - Base Kit

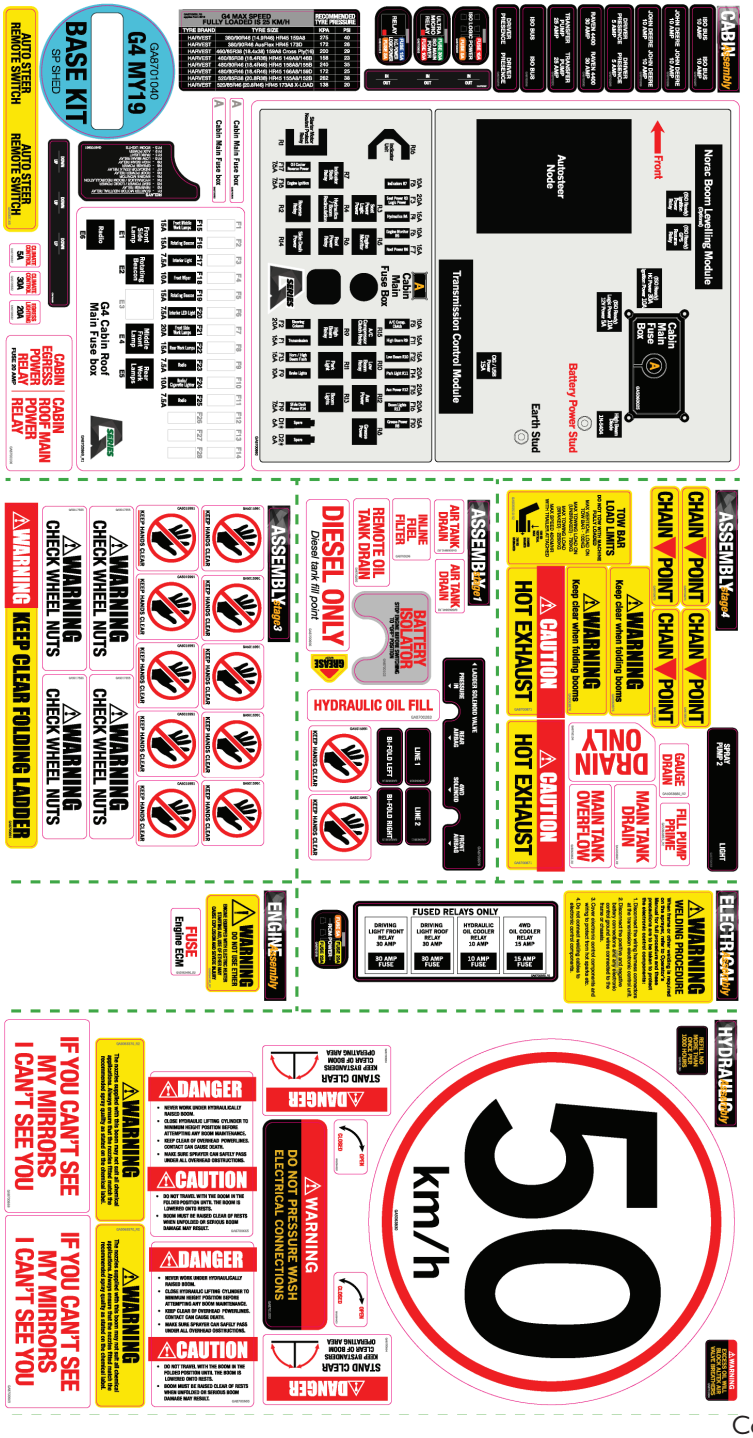

Continued over page

Decals - Base Kit

PART NUMBER	DESCRIPTION
GA8701040	Decal, Base Kit, G4 MY19

Decals - Base Kit

ITEM NO.	PART NUMBER	DESCRIPTION	QTY.
1	GA5063370	Sticker Nozzle Warning	2
2	GA5065165	Decal, Cabin Wiring loom, Auto Steer Remote Switch	1
3	GA8700670	Chain Point	4
4	GA8700871	Caution Hot Exhaust	2
5	GA8700890	Warning Hopper Release	1
6	GA8700889	Warning Induction Caution Hopper	1
7	GA5064160	Warning Do Not Use Ether	1
8	GA5063995	Warning, Welding Procedure	1
9	GA5060510	Towbar Load Limits	1
10	GA222	Grease	64
11	GA5065170	Do Not Fill Past This Point	1
12	GA5063876	Warning Keep Clear	2
13	GA8700891	Warning Keep Clear Folding Ladder	1

Decals - Base Kit

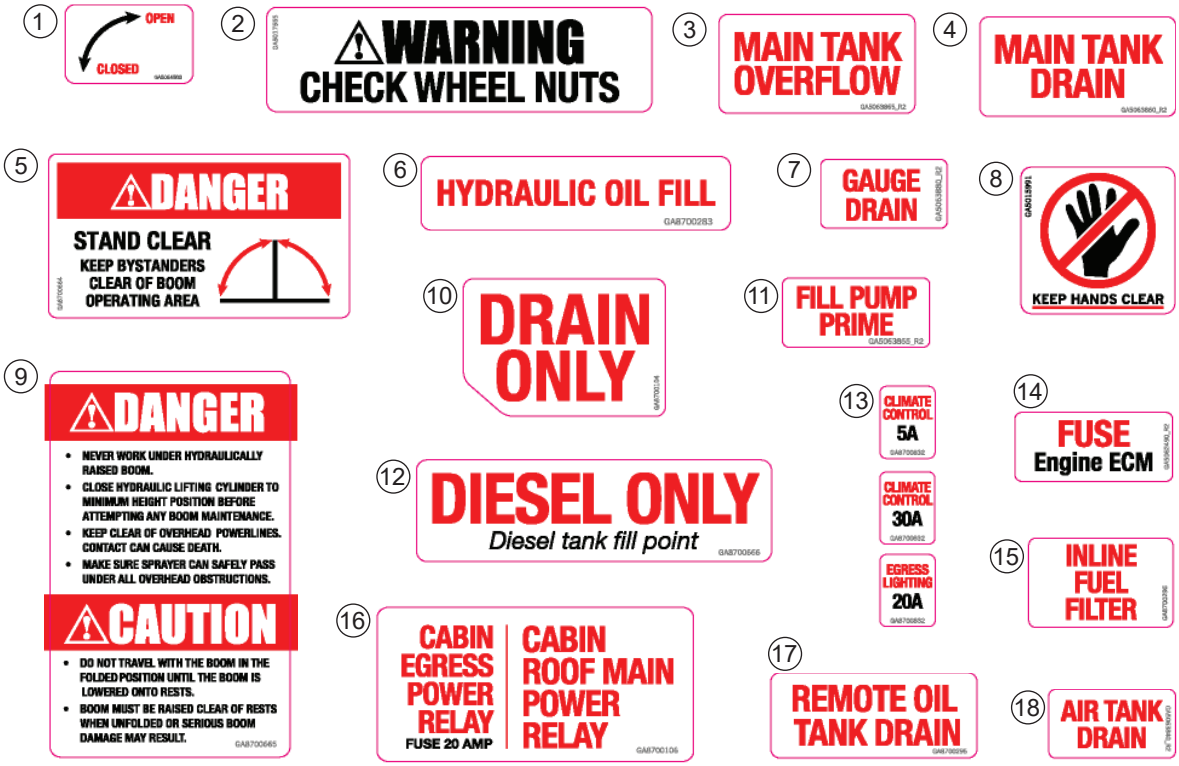

ITEM NO.	PART NUMBER	DESCRIPTION	QTY.
1	GA4065600	Open Closed	2
2	GA5017555	Warning Check Wheel Nuts	4
3	GA5063865	Main Tank Overflow	1
4	GA5063860	Main Tank Drain	1
5	GA8700664	Danger/Stand Clear	2
6	GA8700283	Hydraulic Oil Fill	1
7	GA5063880	Gauge Drain	1
8	GA5015991	Keep Hands Clear	4
9	GA8700665	Danger/Caution	2
10	GA8700104	Drain Only	1
11	GA5063855	Fill Pump Prime	1
12	GA8700666	Diesel Only	1
13	GA8700832	Climate Control & Egress Lighting Fuses	10
14	GA5062490	Fuse, Engine ECM	1
15	GA8700296	Decal, Chassis, Inline Fuel Filter	1
16	GA8700106	Decal, Cabin roof main power relay	1
17	GA8700295	Remote Oil Tank Drain	1
18	GA5063840	Air Tank Drain	1

Decals - Base Kit

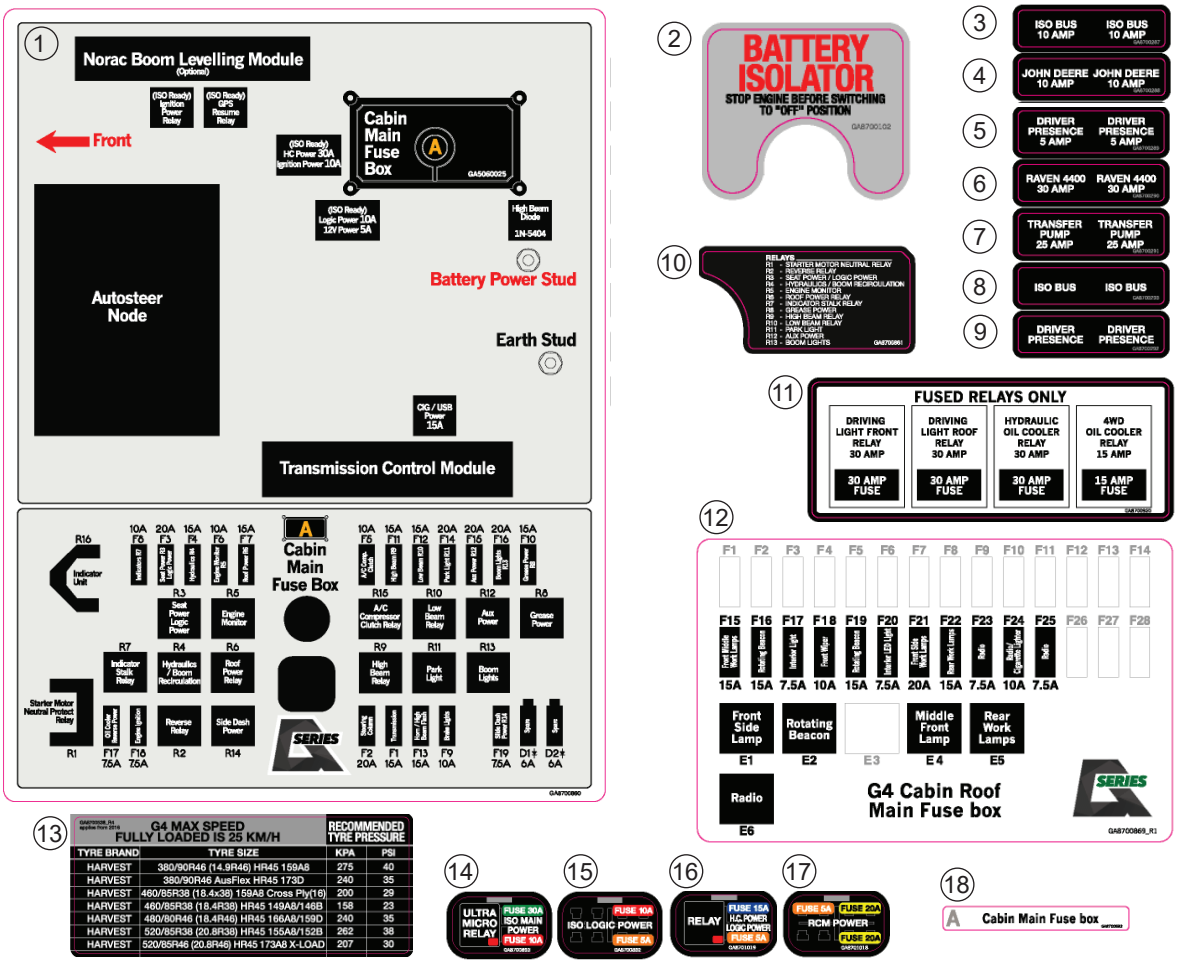

13 G4 MAX SPEED FULLY LOADED IS 25 KM/H — RECOMMENDED TYRE PRESSURE

TYRE BRAND	TYRE SIZE	KPA	PSI
HARVEST	380/90R46 (14.9R46) HR45 159A8	275	40
HARVEST	380/90R46 AusFlex HR45 173D	240	35
HARVEST	460/85R38 (18.4x38) 159A8 Cross Ply(16)	200	29
HARVEST	460/85R38 (18.4R38) HR45 149A8/146B	158	23
HARVEST	480/80R46 (18.4R46) HR45 166A8/159D	240	35
HARVEST	520/85R38 (20.8R38) HR45 155A8/152B	262	38
HARVEST	520/85R46 (20.8R46) HR45 173A8 X-LOAD	207	30

ITEM NO.	PART NUMBER	DESCRIPTION	QTY.
1	GA8700860	Fusebox Layout	1
2	GA8700102	Battery isolator	1
3	GA8700287	Decal, Cabin Wiring loom, ISO BUS 10 Amp	1
4	GA8700288	Decal, Cabin Wiring loom, John Deer 10 Amp	2
5	GA8700289	Decal, Cabin Wiring loom, Driver Presence 5 Amp	1
6	GA8700290	Decal, Cabin Wiring loom, 4400 30 Amp	1
7	GA8700291	Decal, Cabin Wiring loom, Transfer Pump 25 Amp	1
8	GA8700293	Decal, Cabin Wiring loom, ISO BUS	1
9	GA8700292	Decal, Cabin Wiring loom, Drivers Presence	1
10	GA8700861	Relay Guide	1
11	GA8700285	Decal, Chassis, Fuse box	1
12	GA8700869	Decal, Cabin roof main fuse box	1
13	GA8700538	Decal, Tyre pressure, in cabin	1
14	GA8700893	Ultra Micro Relay / Iso Main Power	1
15	GA8700892	Iso Logic Power	1
16	GA8701019	H.C. Power / Logic Power	1
17	GA8701019	RCM Power	1
18	GA8700693	Fuse box, Main control A, Cabin	2

Decals - Base Kit

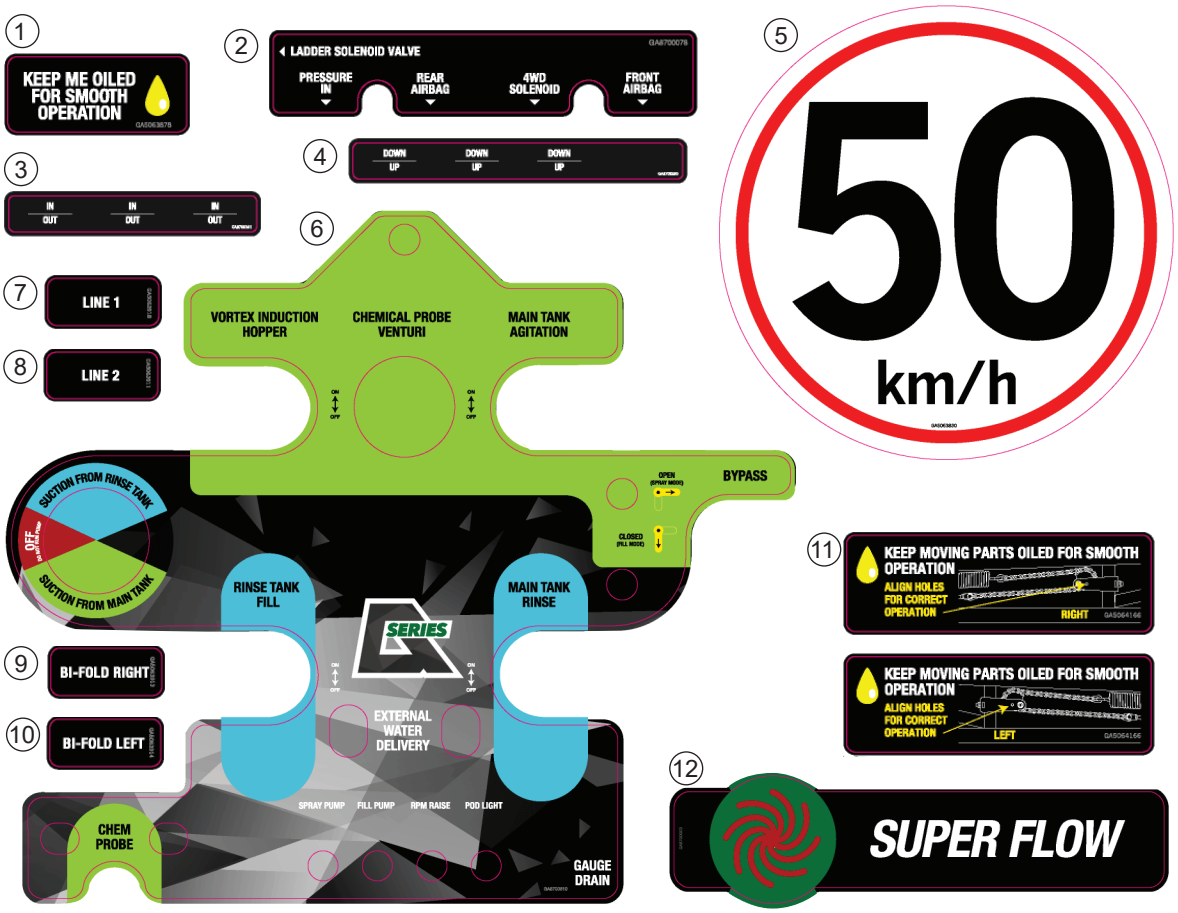

ITEM NO.	PART NUMBER	DESCRIPTION	QTY.
1	GA5063878	Keep Me Oiled	2
2	GA8700078	Decal, Pneumatic manifold	1
3	GA8700381	In, Out	1
4	GA8700380	Down, Up	1
5	GA5063830	50 km/h Sign	1
6	GA8700810	Pod Controls	1
7	GA5063918	Line 1	1
8	GA5063911	Line 2	1
9	GA5063913	Bi-fold Right	1
10	GA5063914	Bi-fold Left	1
11	GA5064166	3D Breakaway Adjustment - Right	1
		3D Breakaway Adjustment - Left	1
12	GA8700003	Decal, Super flow induction hopper 60L	1

Decals - Bonnet

1

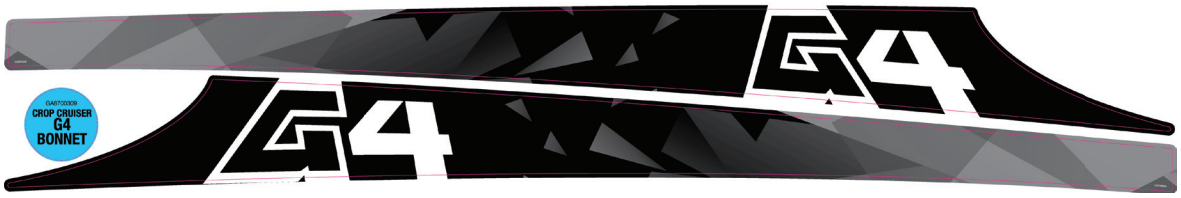

ITEM NO.	PART NUMBER	DESCRIPTION	QTY.
1	GA8700309	Bonnet LH & RH G4	1

Decals - Tank

1

ITEM NO.	PART NUMBER	DESCRIPTION	QTY.
1	GA8700198	Tank RH & LH - 4018	1
	GA8700199	Tank RH & LH - 4021	1
	GA8700200	Tank RH & LH - 4024	1
	GA8700201	Tank RH & LH - 4028	1
	GA8700202	Tank RH & LH - 4030	1
	GA8700203	Tank RH & LH - 4033	1
	GA8700204	Tank RH & LH - 4036	1

Decals - Dry Sight Tube

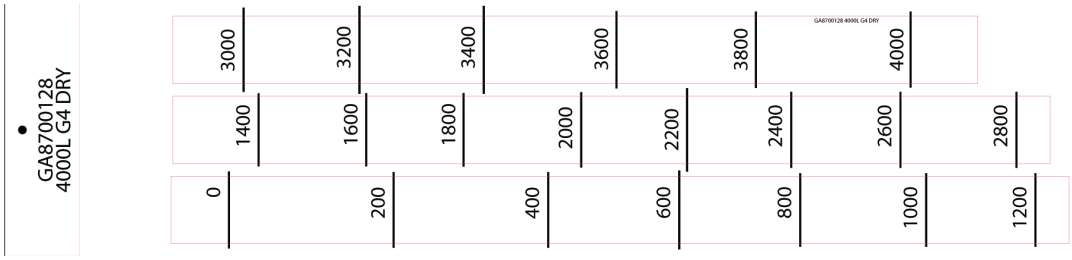

PART NUMBER	DESCRIPTION	QTY.
GA8700128	Decal, Dry sight tube, G4	1

Chapter 18

HYDRAULICS

Oil Tank & Frame

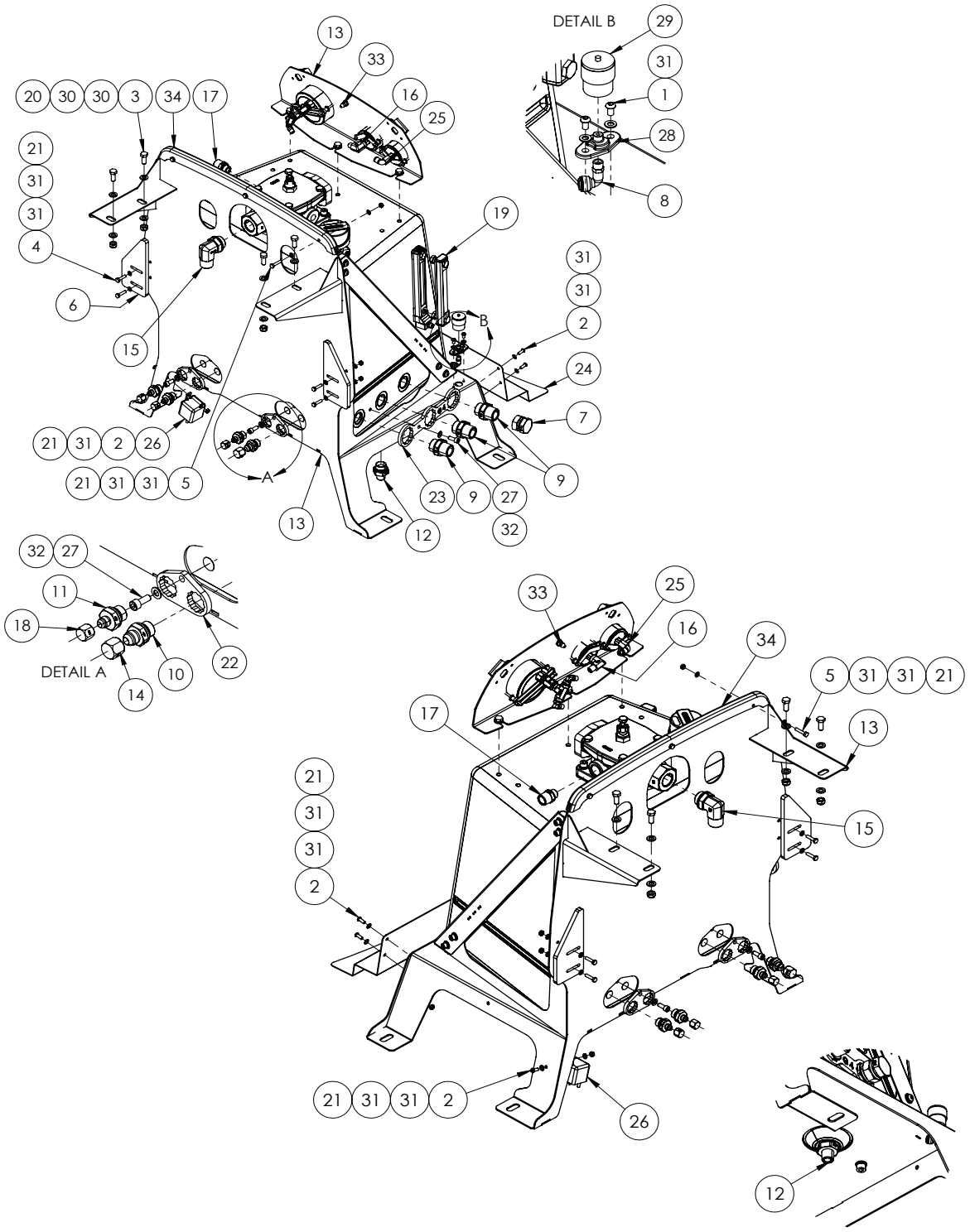

Continued over page

Oil Tank & Frame

ITEM NO.	PART NUMBER	DESCRIPTION	QTY.
1	GA5004023	BHCS M6 x 10 SS A2-70	2
2	GA5004047	BHCS M6 x 16 GR12.9 ZP	5
3	GA5006161	Bolt M10 x 25 GR8.8 ZP	4
4	GA5004073	Bolt M6 x 25 GR8.8 ZP	4
5	GA5004077	Bolt M6 x 30 GR8.8 ZP	3
6	GA5072695	Bonnet Side Support Plastic Slider	2
7	GA3500837	Cap, Swivel, 1” BSPP Female, S59-16	1
8	GA5045145	Pneumatic Fitting, Swivel Elbow, Push in 6mm, Brass 1/8” BSPT	1
9	GA3500863	Hydraulic Adaptor Nipple, 1” BSPT male x 1” BSPP O-ring male, S75D-1616	3
10	GA3500861	Hydraulic Adaptor Nipple, 1/2” BSPP O-ring male x 3/4” JIC male, S74D-0812	1
11	GA3500860	Hydraulic Adaptor Nipple, 1/2” BSPP O-ring male x 9/16” JIC male, S74D-0809	3
12	GA3500862	Hydraulic Adaptor Nipple, 1/2” BSPT male x 3/4” BSPP O-ring male, S75D-0812	1
13	GA3500694	Hydraulic Oil Reservoir and Frame,MY20, HYDAC	1
14	GA3500794	Hydraulic adaptor, Cap, 3/4” JIC female, S65-12	1
15	GA3500327	Hydraulic adaptor, Elbow, 90 degree, 1” BSPT male x 1” BSPP male O-ring, S77-1616	1
16	GA3500209	Hydraulic adaptor, Elbow, 90 degree, 1/4” BSPT male x 1/4” BSPT female, S25-0404	1
17	GA3500313	Hydraulic adaptor, Nipple, 3/4” BSPT male x 1/2” BSPP male, S75-1208	1
18	GA3500793	Hydraulic adaptor, Cap, 9/16” JIC female, S65-09	3
19	GA5075435	Level Gauge, Thermometer, Oil Reservoir, HYDAC	1
20	GA5000141	Nut M10 Nyloc ZP	4
21	GA5048115	Nut M6 Nyloc ZP	12
22	GA4405270	Plate, Oil Reservoir Front Port Support A	2
23	GA4408480	Plate, Oil Reservoir Side Port Support, G4	1
24	GA4504590	Plate, Transmission Cover, G3 G4	1
25	GA7000015	Pneumatic Fitting, Female 1/4” BSPP x 8mm Push In, Female Stud Elbow	1
26	GA5048640	Relay, 12V, 180 Amp Peak, 100 Amp continuous, 4 pin, Normally open	1
27	GA5004707	SHCS M8 x 20 GR12.9 ZP	3
28	GA5070470	Mounting Flange Donaldson Air Cleaner Service Indicator Remote	1
29	GA5010525	Service Indicator kit 25, Suit Crop Cruiser and G3 G4	1
30	GA5000117	Washer M10 Flat SS HD	8
31	GA5003643	Washer M8 Flat SS HD	26
32	GA5003643	Washer M8 Flat SS HD	3
33	GA5071800	Washer Jet, Windscreen, Twin Jet, G3 G4 Series	1
34	GA5074205	Wear Strip, Bonnet Top, Series 2 G6	1

* Sub-assembly on following pages

^ See Chapter 20 ‘Engine & Transmission’ for sub-assembly.

Oil Tank Assembly

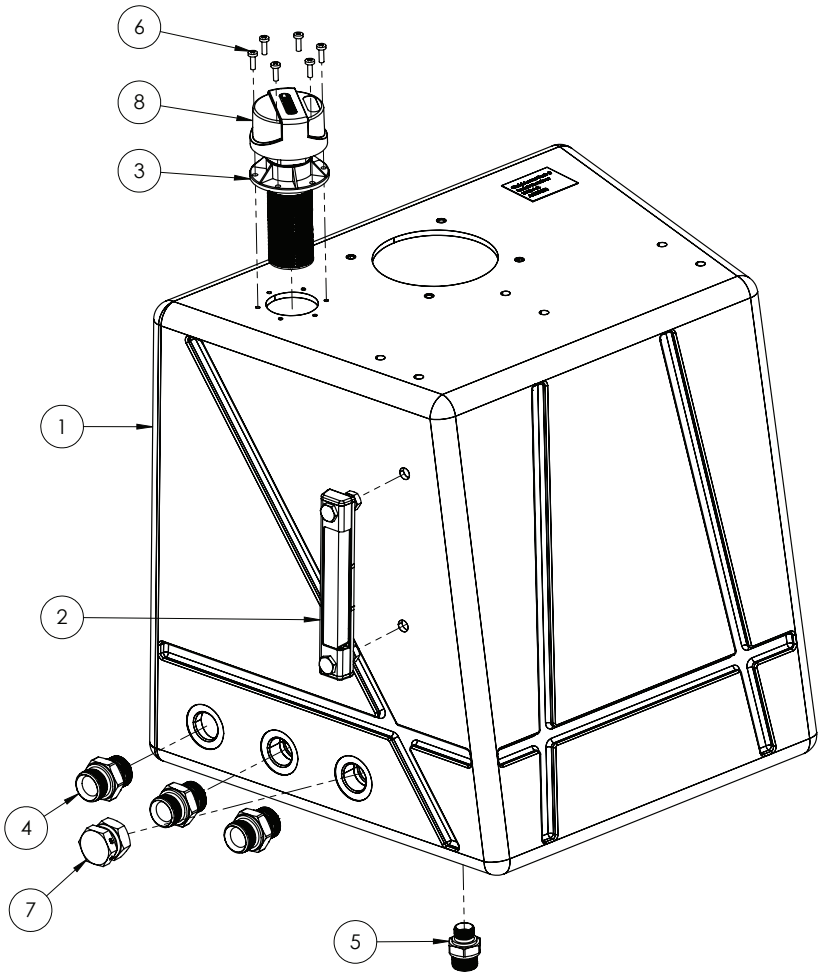

ITEM NO.	PART NUMBER	DESCRIPTION	QTY.
1	GA5072110	Hydraulic Oil Reservoir, Tank Only, with basic fittings, Crop Cruiser, G3 G4 G5 G6, HYDAC, Pre MY20	1
2	GA5075435	Level Gauge, Thermometer, Oil Reservoir, HYDAC	1
3	GA5078873	Tank Breather Filter with Filler Strainer, Hydac, Breather ELF P 30 F W 1.0/-AS	1
4	GA5075440	Nipple, 1” BSPT x 1” BSPP O-ring, HYDAC	3
5	GA5075445	Nipple, 3/4" BSPP x 1/2" BSPT, HYDAC	1
6	GA5003977	Bolt Pan Head M5 x 16 SS A2-70	6
7	GA3500837	Cap, Swivel, 1” BSPP Female, S59-16	1
8	GA5075450	Breather Filter Cap, Oil Reservoir Filler, HYDAC	1

* NOTE: Parts #2, 3, 5 & 6 and side plate are included with #1.

Oil Tank - Gauge Assembly

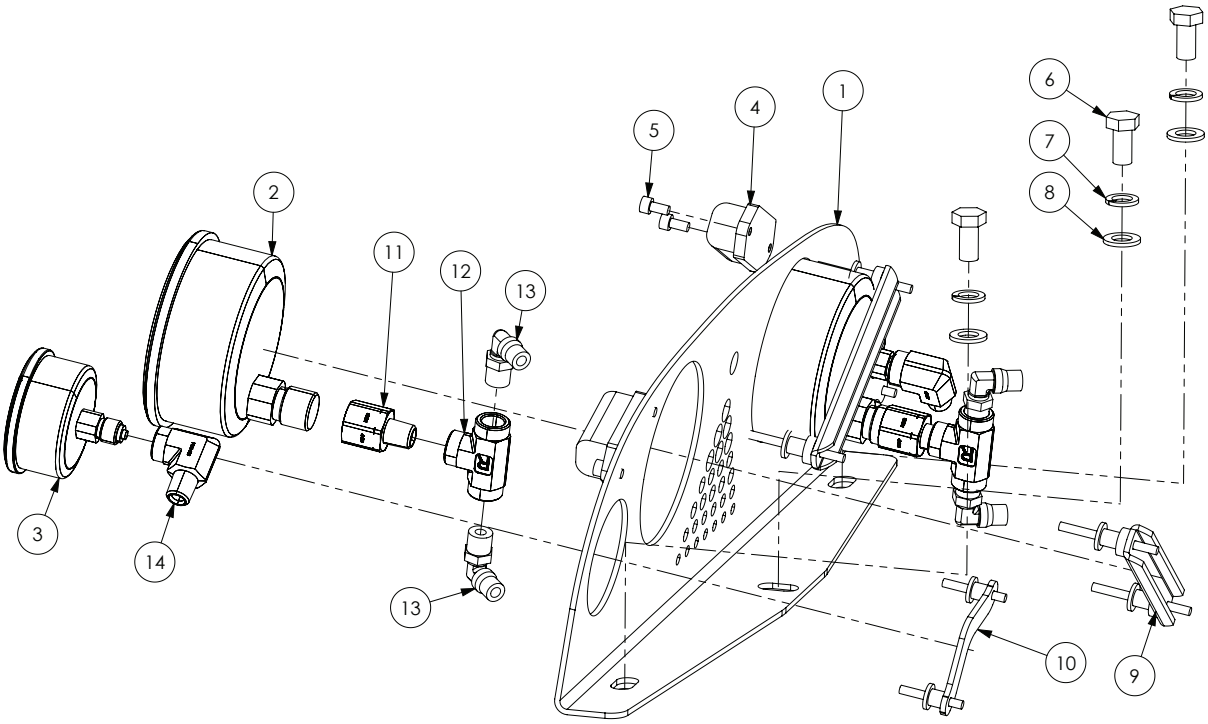

ITEM NO.	PART NUMBER	DESCRIPTION	QTY.
1	-	Steel Gauge Pane	1
2	GA5075420	Gauge, 100mm, 3/8” BSP Rear Port, Large	2
3	GA5075425	Gauge, 63mm, 1/4” BSP Rear Port, Small	2
4	GA5075430	Light, LED, Gauge Light, Oil Reservoir	2
5	GA5069975	SHCS M5 x 10 SS	4
6	GA5006113	Bolt M10 x 20 ZP GR8.8	3
7	GA5000137	Washer 10mm Spring SS	3
8	GA5000117	Washer 10mm Flat SS HD	3
9	GA5075460	Gauge Retainer, Mounting Bracket, 100mm Gauge	2
10	GA5075455	Gauge Retainer, Mounting Bracket, 63mm Gauge	2
11	S72-0406	Hydraulic adaptor, 1/4” BSPT male x 3/8” BSPT female	2
12	GA3500242	Hydraulic adaptor, Tee, 1/4” female BSPT x 1/4” female BSPT x 1/4” BSPT female	2
13	GA5016233	Pneumatic fitting, Elbow, 90 degree, 1/4” BSP male x 6mm push type, Metal	4
14	GA3500209	Hydraulic adaptor, Elbow, 90 degree, 1/4" BSPT male x 1/4" BSPT female	2

Oil Tank - Oil Return Filter

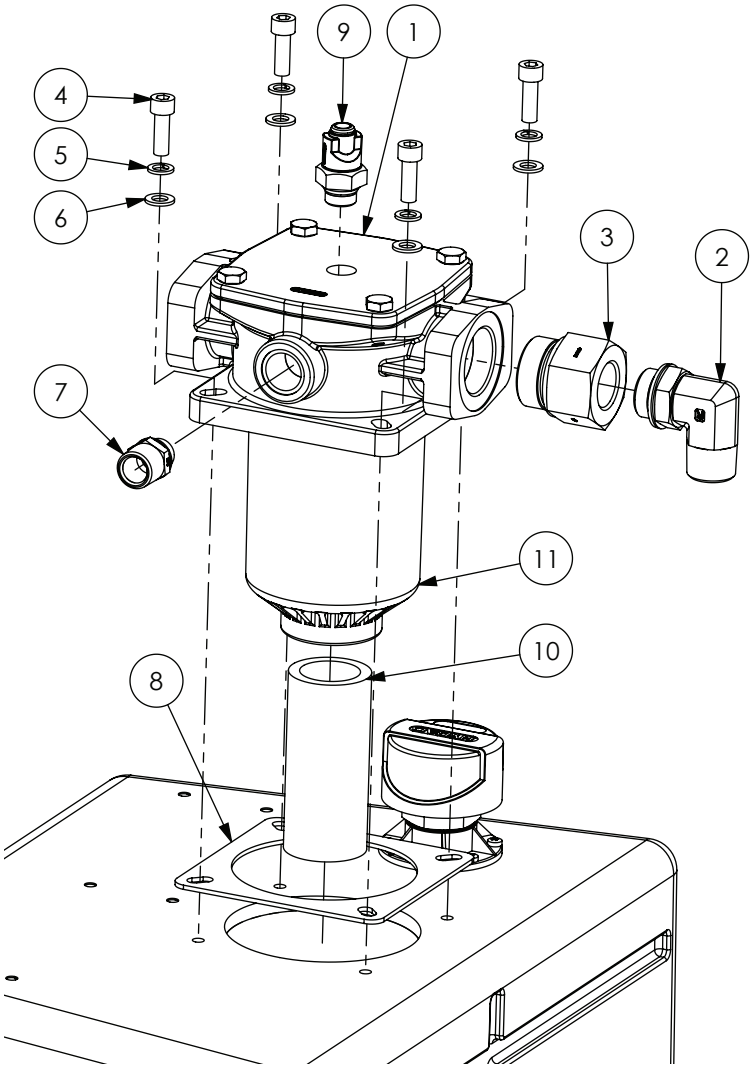

ITEM NO.	PART NUMBER	DESCRIPTION	QTY.
1	GA5069055	Filter, Hydraulic Return, Tank top, RMF BN/HC 330	1
2	GA3500327	Hydraulic adaptor, Elbow, 90 degree, 1” BSPT male x 1” BSPP male O-ring	1
3	GA3500191	Hydraulic adaptor, Reducing bush, 1 1/2" BSPP male x 1" BSPP female	1
4	GA5020115	SHCS M10 x 30 ZP GR12.9	4
5	GA5000137	Washer 10mm Spring SS	4
6	GA5000117	Washer 10mm Flat SS HD	4
7	GA3500313	Hydraulic adaptor, Nipple, 3/4" BSPT male x 1/2" BSPP male	1
8	GA5070580	Gasket Hydraulic Oil Return Filter Housing	1
9	GA5070780	Clogging Service Indicator Oil Return	1
10	GA5069910	Pipe Black Steel riser 2" x 150mm, 2" BSPT male thread one end	1
11	GA5069056	Filter element, suit tank mounted filter GA5069055, Hydac	1

Oil Cooler Assembly

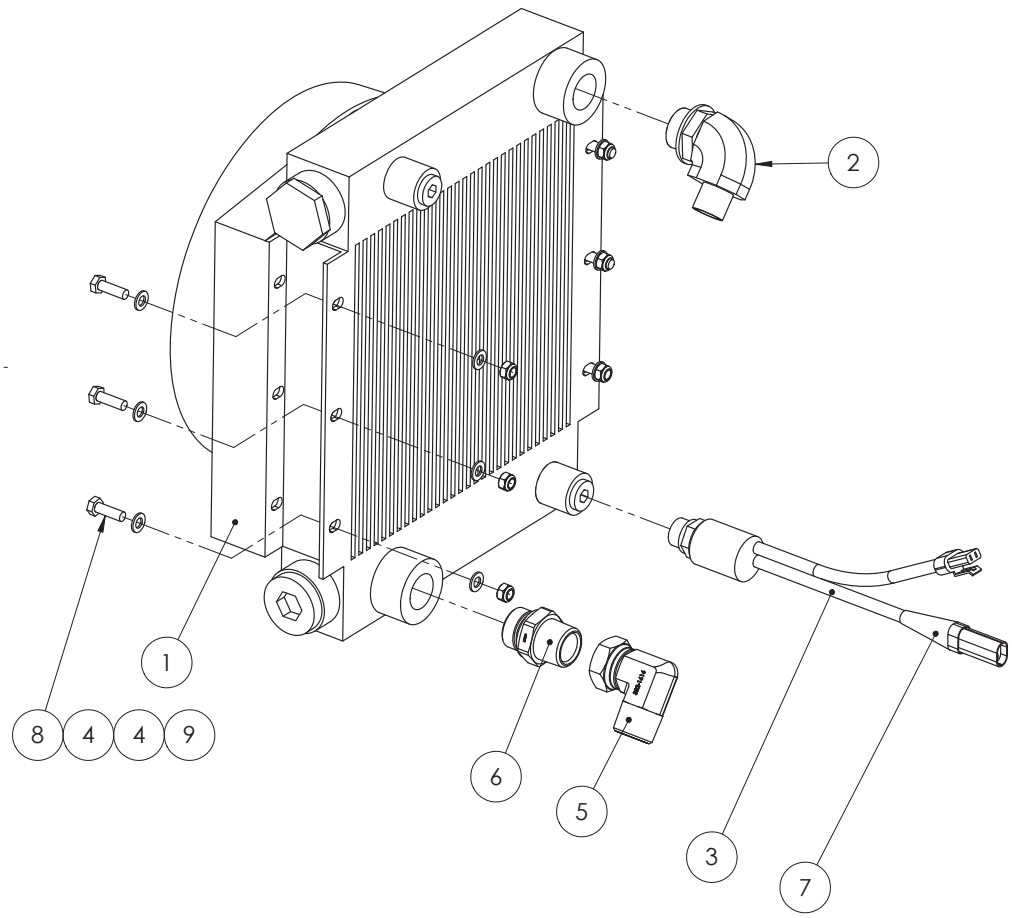

REPLACEMENT PARTS

PART NUMBER	DESCRIPTION
GA5071855	Fan, Hydraulic Oil Cooler, Hydac
GA5071860	Core, Hydraulic Oil Cooler, Hydac

ITEM NO.	PART NUMBER	DESCRIPTION	QTY.
1	GA5069045	Oil Cooler - Hydac size 3	1
2	GA3500326	Hydraulic adaptor, Elbow, 90 degree, 3/4” BSPT male x 1” BSPP male O-ring	1
3	GA5069050	Thermostat to suit Oil Cooler - Hydac	1
4	GA5003643	Washer 8mm Flat SS HD	12
5	GA5071200	Hydraulic Adaptor, 90 degree elbow 1” male / 1” Female nut	1
6	GA3500317	Hydraulic adaptor, Nipple, 1" BSPT male x 1" BSPP male	1
7	GA5048957	Glued heat shrink - 60mm long	1
8	GA5004711	Bolt M8 x 25 GR8.8 ZP	6
9	GA5052590	Nut M8 Nyloc SS	6

Transmission Cooler Assembly

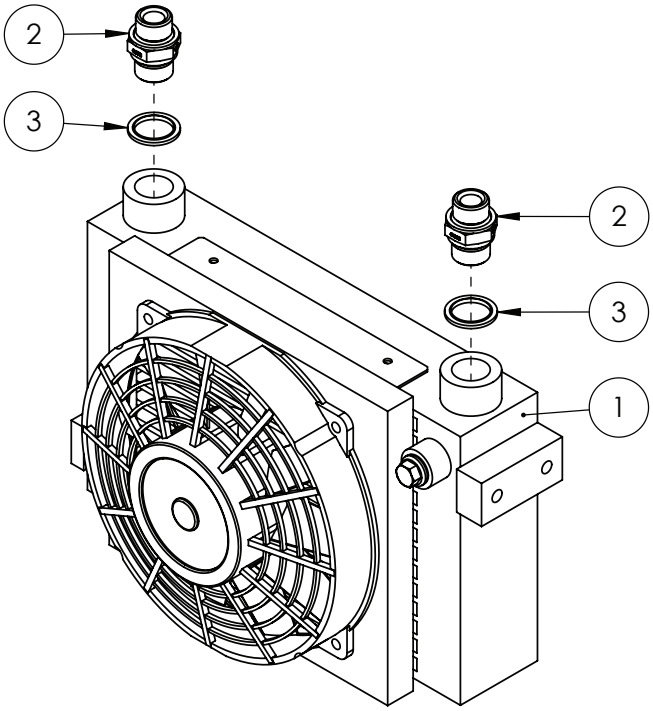

ITEM NO.	PART NUMBER	DESCRIPTION	QTY.
1	GA3500151	Oil Cooler, Hydraulic, Transfer Case	1
2	GA3500178	Hydraulic Nipple, M22 x 1.5mm Male to 1/2” BSPP Male	2
3	GA3500179	Hydraulic adaptor, Seal, Metal Bonded, M22	2

Steering Orbital

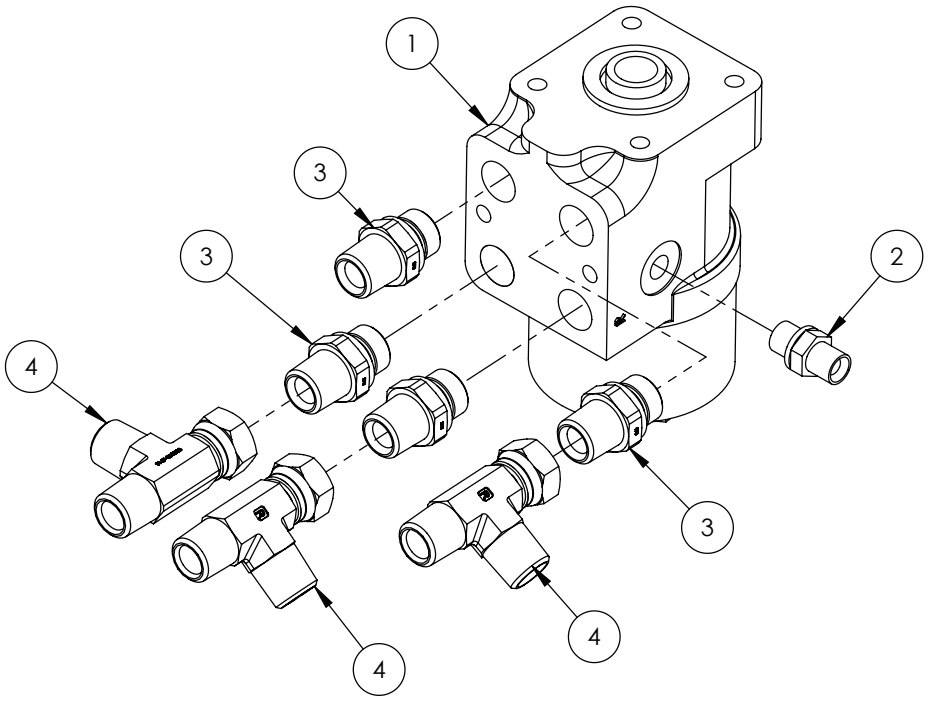

ITEM NO.	PART NUMBER	DESCRIPTION	QTY.
1	GA5000031	Steering Orbital , 250cc, Load Sensing	1
2	GA3500306	Hydraulic adaptor, Nipple, 1/4" BSPT male x 1/4" BSPP male	1
3	GA3500310	Hydraulic adaptor, Nipple, 1/2” BSPT male x 1/2” BSPP male	4
4	GA3500200	Hydraulic adaptor, Tee, 1/2" BSPT male x 1/2" BSPT male x 1/2" BSPP female swivel	3

Auto Steer - Trimble Manifold

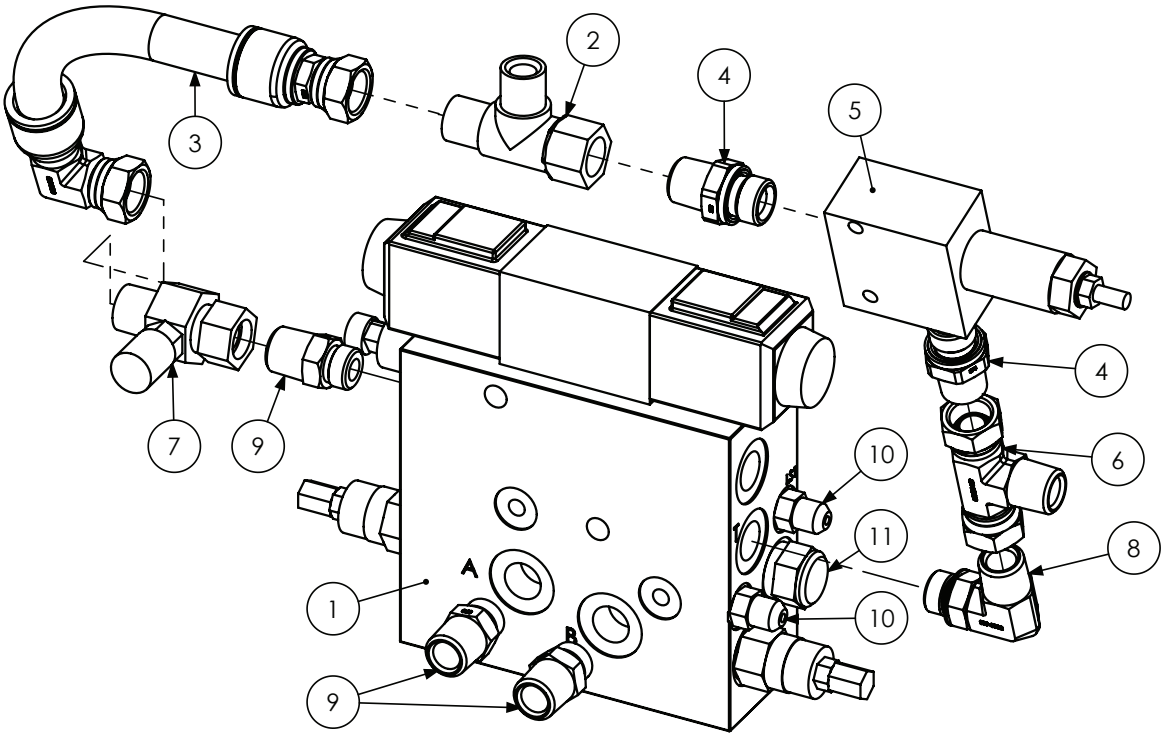

ITEM NO.	PART NUMBER	DESCRIPTION	QTY.
1	GA5069860	Trimble auto steer platform kit	1
2	GA3500200	Hydraulic adaptor, Tee, 1/2” BSPT male x 1/2” BSPT male x 1/2” BSPP female swivel	1
3	GA3500099	Hydraulic Hose, Trimble Block	1
4	GA3500310	Hydraulic adaptor, Nipple, 1/2” BSPT male x 1/2” BSPP male	2
5	GA5006933	Hydraulic pressure relief (CartReliefDIR.OP.BI Directional)	1
6	GA3500336	Hydraulic adaptor, Tee, 1/2” BSPP female swivel x 1/2” BSPT male x 1/2” BSPP female swivel	1
7	GA3500198	Hydraulic adaptor, Inline test point, 1/2” BSPP female swivel x 1/2” BSPT male x M16 x 2.0 test port	1
8	GA3500349	Hydraulic adaptor, Elbow, 90 degree, 1/2” BSPT male x 3/4” UN male O-ring	1
9	GA3500363	Hydraulic adaptor, Nipple, 1/2” BSPT male x 3/4” UN male O-ring	3
10	GA3500354	Hydraulic adaptor, Nipple, 9/16” JIC male x 7/16” UN male O-ring	2
11	GA5069865	Trimble valve cartridge PTS 40	1

Auto Steer - John Deere Manifold

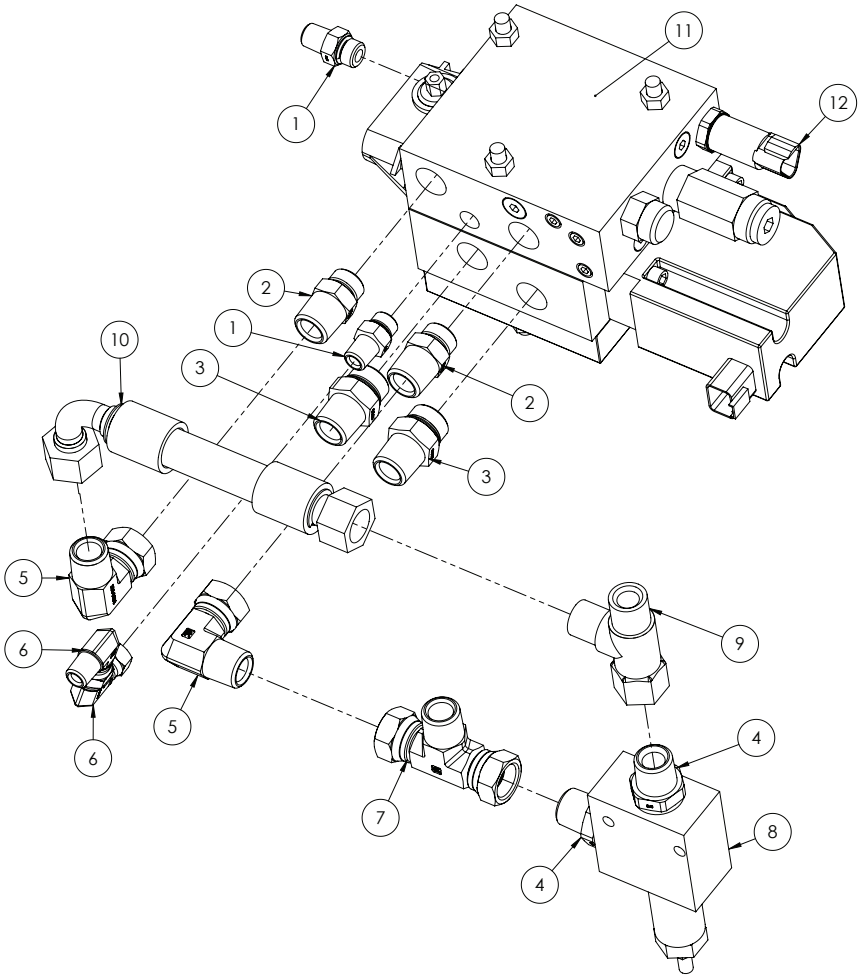

ITEM NO.	PART NUMBER	DESCRIPTION	QTY.
1	GA3500358	Hydraulic adaptor, Nipple, 1/4” BSPT male x 9/16” UN male O-ring	2
2	GA3500363	Hydraulic adaptor, Nipple, 1/2” BSPT male x 3/4” UN male O-ring	2
3	GA3500364	Hydraulic adaptor, Nipple, 1/2” BSPT male x 7/8” UN male O-ring	2
4	GA3500310	Hydraulic adaptor, Nipple, 1/2” BSPT male x 1/2” BSPP male	2
5	GA3500333	Hydraulic adaptor, Elbow, 90 degree, 1/2” BSPT male x 1/2” BSPP female swivel	2
6	GA3500332	Hydraulic adaptor, Elbow, 90 degree, 1/4” BSPT male x 1/4” BSPP female swivel	2
7	GA3500336	Hydraulic adaptor, Tee, 1/2” BSPP female swivel x 1/2” BSPT male x 1/2” BSPP female swivel	1
8	GA5006933	Hydraulic pressure relief (CartReliefDIR.OP.BI Directional)	1
9	GA3500200	Hydraulic adaptor, Tee, 1/2” BSPT male x 1/2” BSPT male x 1/2” BSPP female swivel	1
10	GA5067971	Hydraulic Hose Assembly, John Deere Auto Steer, H123	1
11	GA3000143	Hydraulic valve block, Steering, JD, Raven	1
12	GA5076952	Pressure Transducer, sensor, 0-3000 PSI, 4-20mA, Raven	1

Hydraulic Manifold - Pump Flow Control Assembly

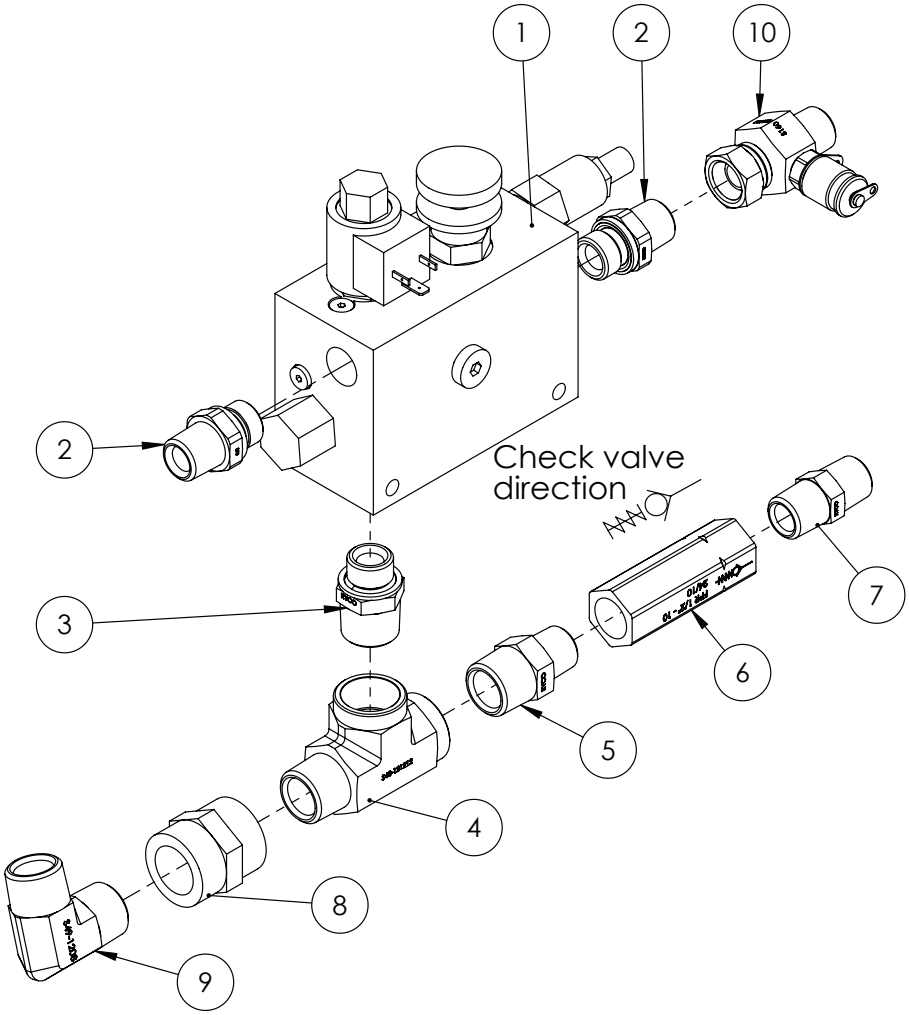

ITEM NO.	PART NUMBER	DESCRIPTION	QTY.
1	GA5011675*	Hydraulic Manifold - Pump Flow Control	1
2	GA3500310	Hydraulic adaptor, Nipple, 1/2” BSPT male x 1/2” BSPP male	2
3	GA3500313	Hydraulic adaptor, Nipple, 3/4" BSPT male x 1/2" BSPP male	1
4	GA3500255	Hydraulic adaptor, Tee, 3/4" BSPT male x 3/4" BSPT female x 3/4" BSPT female	1
5	GA3500226	Hydraulic adaptor, Nipple, 3/4” BSPT male x 1/2” BSPT male	1
6	GA5007059	10 BAR Check Valve	1
7	GA3500223	Hydraulic adaptor, Nipple, 1/2" BSPT male x 1/2" BSPT male	1
8	GA3500213	Hydraulic adaptor, Socket, 1/2” BSPT female x 1/2” BSPT female	1
9	GA3500264	Hydraulic adaptor, Elbow, 90 degree, 3/4” BSPT male x 3/4” BSPT male	1
10	GA3500198	Hydraulic adaptor, Inline test point, 1/2” BSPP female swivel x 1/2” BSPT male x M16 x 2.0 test port	1

* Sub-assembly on following pages

Hydraulic Manifold - Pump Flow Control

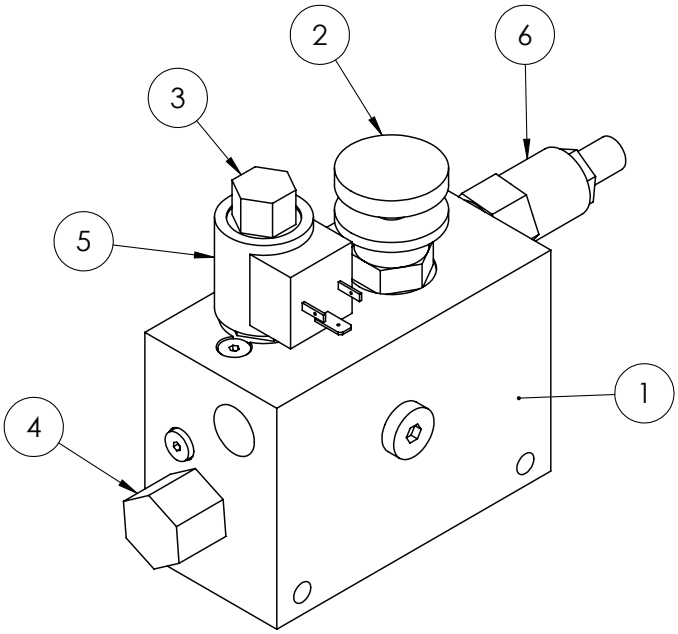

ITEM NO.	PART NUMBER	DESCRIPTION	QTY.
1	GA5052465	Pump flow control - manifold	1
2	GA5069180	Flow Control valve	1
3	GA5007266	Cartridge, Poppet valve, Suit hydraulic solenoid	1
4	-	Pressure Reducing Valve	1
5	GA5052475	12V Coil 6306012	1
6	GA5052480	Pressure Relief valve	1

Hydraulic Manifold - Accumulator Lockout

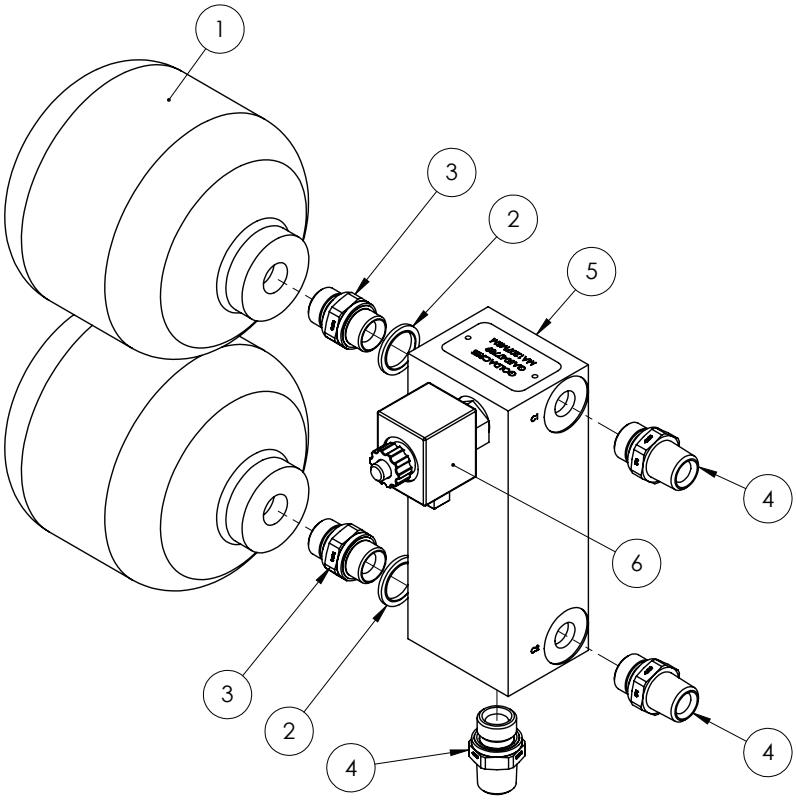

ITEM NO.	PART NUMBER	DESCRIPTION	QTY.
1	GA5007787	Accumulator, Hydraulic, 1L, precharged to 70 bar	2
2	GA3500159	Hydraulic Seal, Bonded, 1/2” RL21, BSPP	2
3	GA3500253	Hydraulic adaptor, Nipple, 1/2” BSPP male x 1/2” BSPP male, S46-0808	2
4	GA3500310	Hydraulic adaptor, Nipple, 1/2” BSPT male x 1/2” BSPP male, S75-0808	3
5	GA5047789	Manifold, Hydraulic, Accumulator Lockout MY14	1
6	GA5047730	Valve cartridge hyd sol poppet NC-12V with overide plus body	1

Hydraulic Manifold - Fill Pump

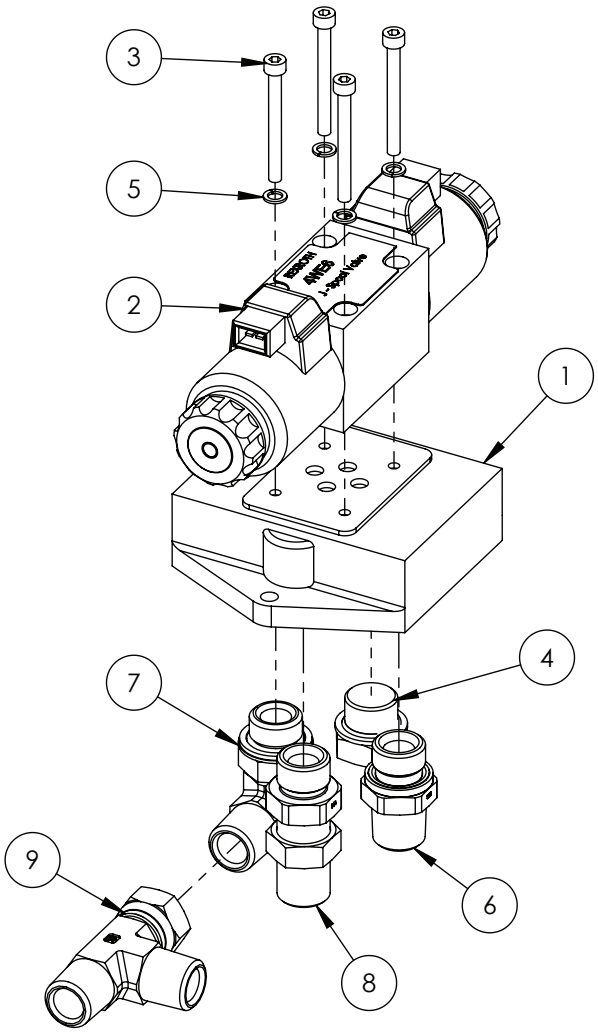

ITEM NO.	PART NUMBER	DESCRIPTION	QTY.
1	GA5016139	Base plate 1/2"	1
2	GA5047726	Valve solenoid J spool 12v AMP connector	1
	GA5047750	Solenoid coil, 12V DC, Slip on, 2 pin AMP	-
3	GA5054410	SHCS M5 x 50mm	4
4	GA3500301	Hydraulic adaptor, Plug, 1/2" BSPP male	1
5	GA5003629	Washer 5mm Spring SS	4
6	GA3500310	Hydraulic adaptor, Nipple, 1/2" BSPT male x 1/2" BSPP male	1
7	GA3500323	Hydraulic adaptor, Elbow, 90 degree, 1/2” BSPT male x 1/2” BSPP male O-ring	1
8	GAS99-603	Hydraulic adaptor, Nipple, 1/2" BSP male x 1/2" BSP male	1
9	GA3500200	Hydraulic adaptor, Tee, 1/2” BSPT male x 1/2” BSPT male x 1/2” BSPP female swivel	1

Hydraulic Manifold - Adjustable axle

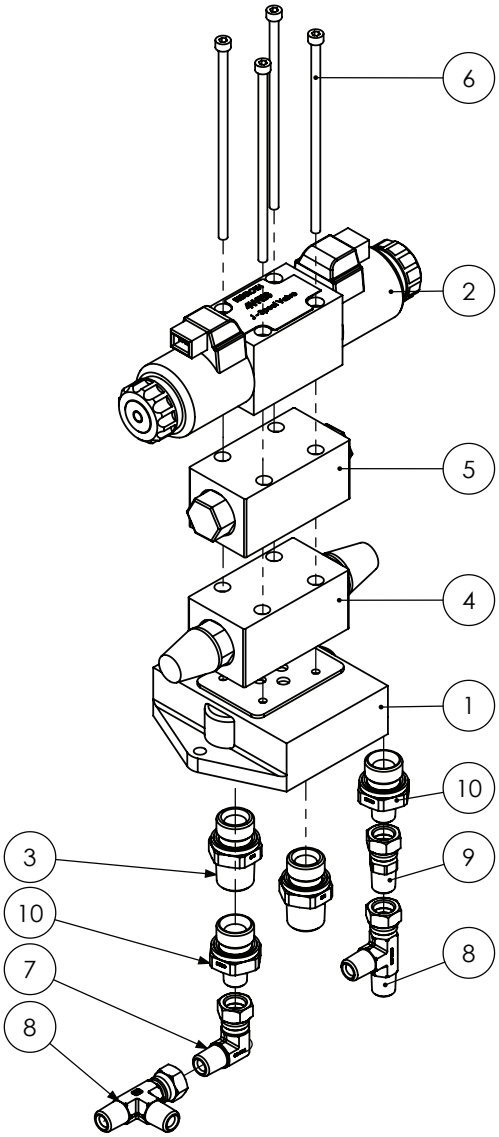

ITEM NO.	PART NUMBER	DESCRIPTION	QTY.
1	GA5016139	Hydraulic manifold, Single valve port, 1/2" inlets / outlets	1
2	GA5047726	Valve solenoid J spool 12v 2 pin amp connector	1
	GA5047750	Solenoid coil, 12V DC, Slip on, 2 pin AMP	-
3	GA3500310	Hydraulic adaptor, Nipple, 1/2" BSPT male x 1/2" BSPP male	2
4	GA5047581	Hydraulic Valve, Flow control, NG6 A+B, Suit spool	1
5	GA5017335	Valve check modular	1
6	GA5048570	SHCS M5 x 130 GR12.9 ZP	4
7	GA3500332	Hydraulic adaptor, Elbow, 90 degree, 1/4" BSPT male x 1/4" BSPP female swivel	1
8	GA3500199	Hydraulic adaptor, Tee, 1/4 BSPT male x 1/4 BSPT male x 1/4 BSPP female	2
9	GA3500328	Hydraulic adaptor, Nipple, 1/4" BSPT male x 1/4" BSPP female swivel	1
10	GA3500308	Hydraulic adaptor, Nipple, 1/4" BSPT male x 1/2" BSPP male	2

Hydraulic Manifold - Centre Lock

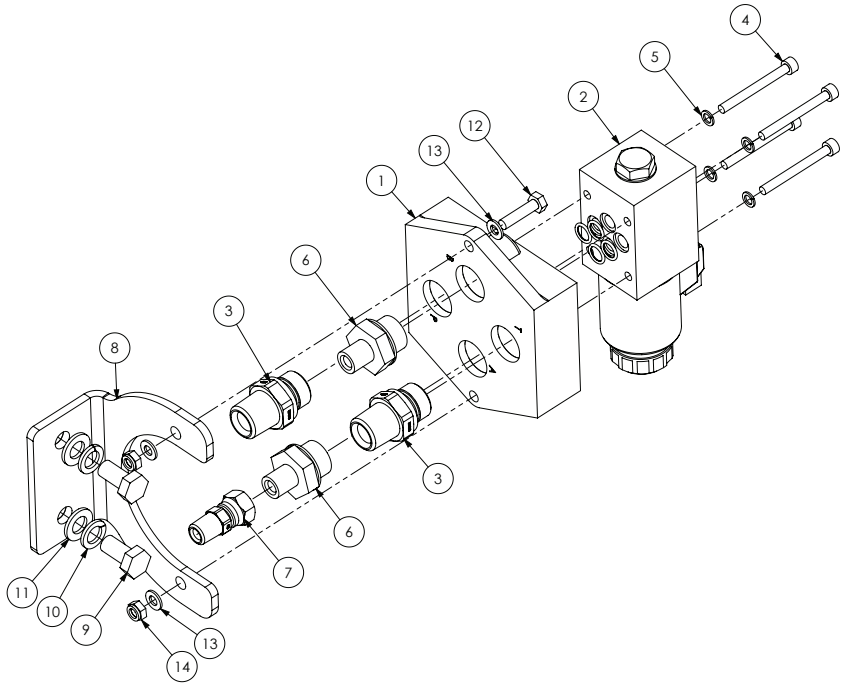

ITEM NO.	PART NUMBER	DESCRIPTION	QTY.
1	GA5016139	Base plate 1/2"	1
2	GA5047756	D spool hydraulic solenoid valve	1
	GA5047750	Solenoid coil, 12V DC, Slip on, 2 pin AMP	-
3	GA3500310	Hydraulic adaptor, Nipple, 1/2” BSPT male x 1/2” BSPP male	2
4	GA5054410	SHCS M5 x 50mm	4
5	GA5003629	Washer 5mm Spring SS	4
6	GA3500308	Hydraulic adaptor, Nipple, 1/4” BSPT male x 1/2” BSPP male	2
7	GA3500328	Hydraulic adaptor, Nipple, 1/4” BSPT male x 1/4” BSPP female swivel	1
8	GA4509365	Prairie Hydraulic Fill pump mount plate	1
9	GA5006113	Bolt M10 x 20 ZP Gr8.8	2
10	GA5000137	Washer 10mm Spring SS	2
11	GA5000117	Washer 10mm Flat SS HD	2
12	GA5004073	Bolt M6 x 25	2
13	GA5004437	Washer 6mm Flat SS	4
14	GA5048115	Nut M6 Nyloc SS	2

Hydraulic Manifold - Return

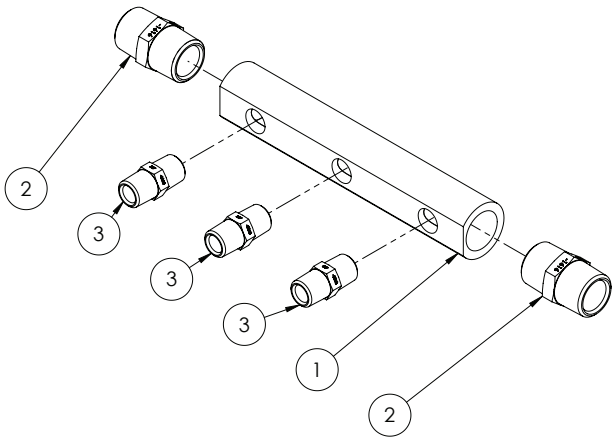

ITEM NO.	PART NUMBER	DESCRIPTION	QTY.
1	L009A	3 holes 1/2” brass manifold	1
2	GA3500231	Hydraulic adaptor, Nipple, 1” BSPT male x 1” BSPT male	2
3	GA3500223	Hydraulic adaptor, Nipple, 1/2” BSPT male x 1/2” BSPT male	3

Hydraulic Priority Valve

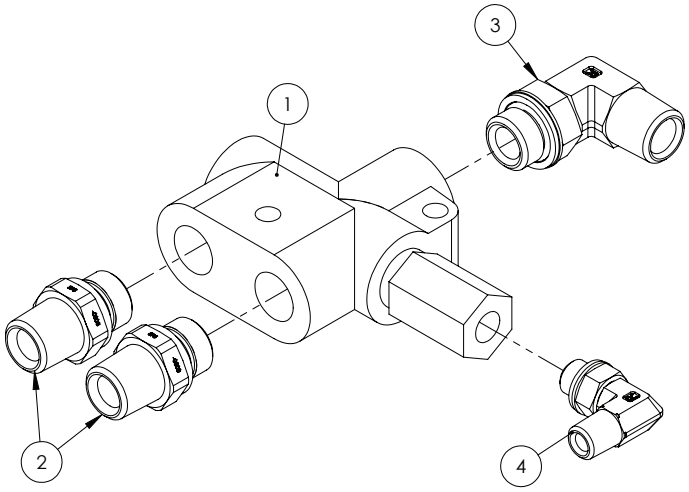

ITEM NO.	PART NUMBER	DESCRIPTION	QTY.
1	GA5010957	Load sensing priority valve	1
2	GA3500310	Hydraulic adaptor, Nipple, 1/2” BSPT male x 1/2” BSPP male	2
3	GA3500323	Hydraulic adaptor, Elbow, 90 degree, 1/2” BSPT male x 1/2” BSPP male O-ring	1
4	GA3500320	Hydraulic adaptor, Elbow, 90 degree, 1/4” BSPT male x 1/4” BSPP male O-ring	1

Pressure Reducing Valve Assembly

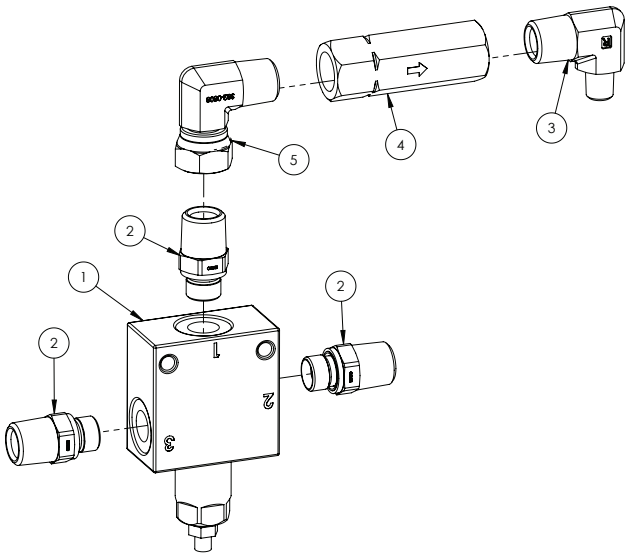

ITEM NO.	PART NUMBER	DESCRIPTION	QTY.
1	GA5047708	Valve, Pressure reducing, Hydraulic, 10 - 140bar	1
2	GA3500309	Hydraulic adaptor, Nipple, 1/2" BSPT male x 3/8" BSPP male	3
3	GA3500260	Hydraulic adaptor, Elbow, 90 degree, 1/2” BSPT male x 1/4” BSPT male	1
4	GA5007060	Valve, Check, Hydraulic, 1/2 BSPP female inlet & outlet, 45L/min flow, Maximum 320bar	1
5	GA3500333	Hydraulic adapter, Elbow, 90 degree, 1/2” BSPT male x 1/2” BSPP female swivel	1

Flow Divider Assembly

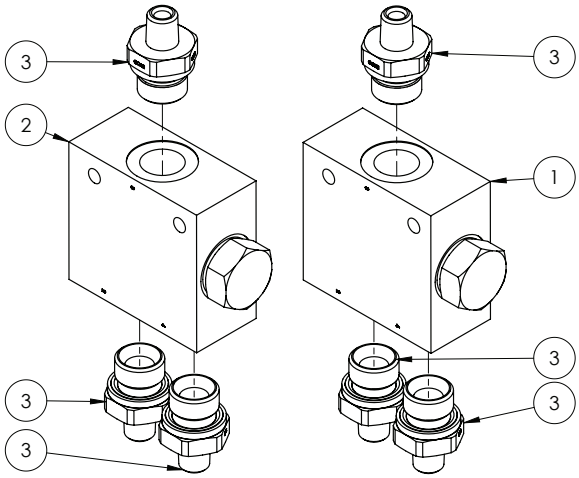

ITEM NO.	PART NUMBER	DESCRIPTION	QTY.
1	GA3500106	Hydraulic Valve, Flow Divider, 1 - 3 l/min - Bi-fold	1
	GA5078462	Cartridge, Flow Divider, 1 - 3 l/min, Suit GA3500106	1
2	GA3500120	Hydraulic Valve, Flow Divider, 5 - 13 l/min - First stage fold	1
	GA5078463	Cartridge, Flow Divider, 5 - 13 l/min, Suit GA3500120	1
3	GA3500308	Hydraulic adaptor, Nipple, 1/4” BSPT male x 1/2” BSPP male	6

Double Pilot Check Valves - Bi-fold

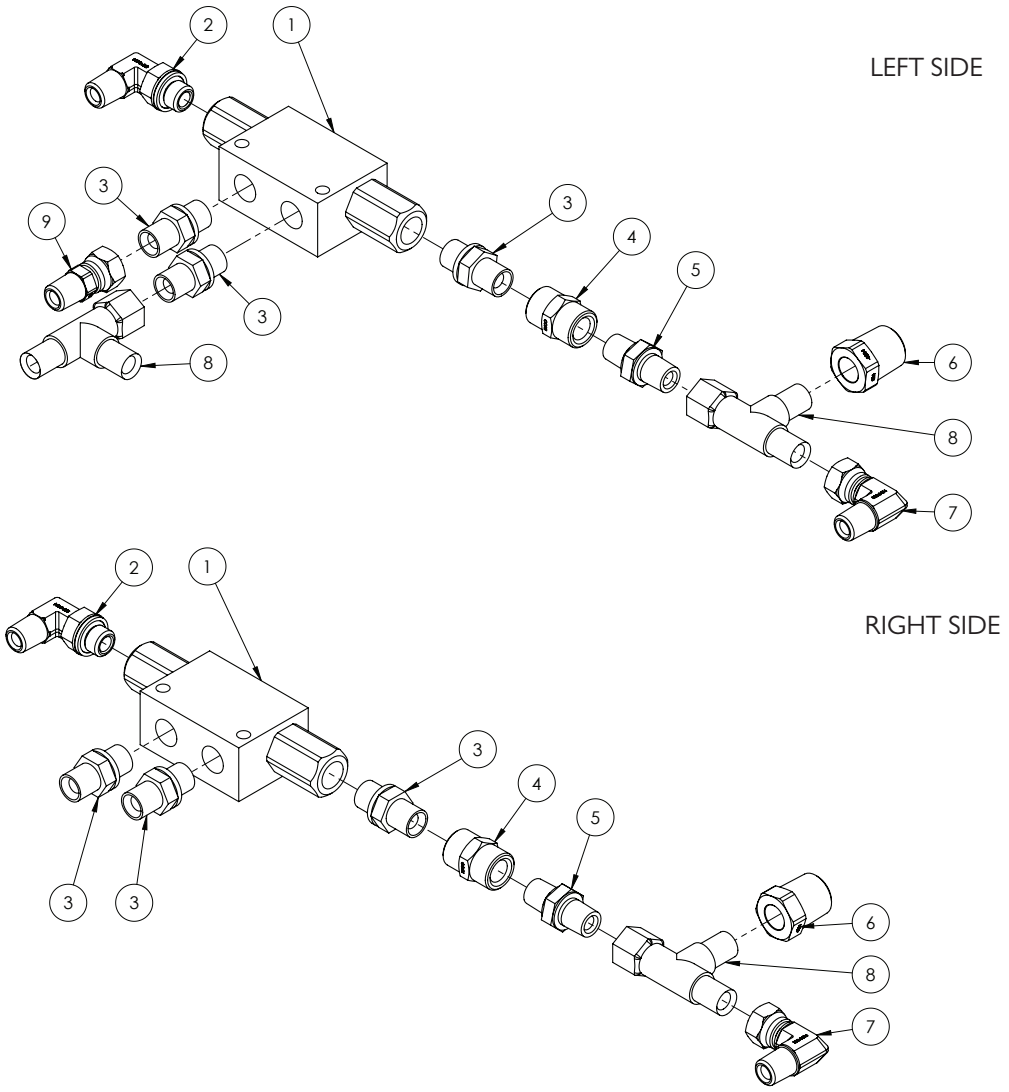

ITEM NO.	PART NUMBER	DESCRIPTION	QTY.
1	GA5007957	Double pilot check (RA) 12LPM 1/4" BSPP	2
2	GA3500320	Hydraulic adaptor, Elbow, 90 degree, 1/4” BSPT male x 1/4” BSPP male O-ring	2
3	GA3500306	Hydraulic adaptor, Nipple, 1/4” BSPT male x 1/4” BSPP male	6
4	GA3500211	Hydraulic adaptor, Socket, 1/4” BSPT female x 1/4” BSPT female	2
5	GA4562025	Restrictor nipple 1/4” BSPT 0.5mm orifice	2
6	GA5078005	Bush, Reducing, Poly, 1/2” Male Thread x 1/4” Female Thread	2
7	GA3500332	Hydraulic adaptor, Elbow, 90 degree, 1/4” BSPT male x 1/4” BSPP female swivel	2
8	GA3500199	Hydraulic adaptor, Tee, 1/4" BSPT male x 1/4" BSPT male x 1/4" BSPP female	3
9	GA3500328	Hydraulic adaptor, Nipple, 1/4” BSPT male x 1/4” BSPP female swivel	1

Yaw Control Valve Assembly

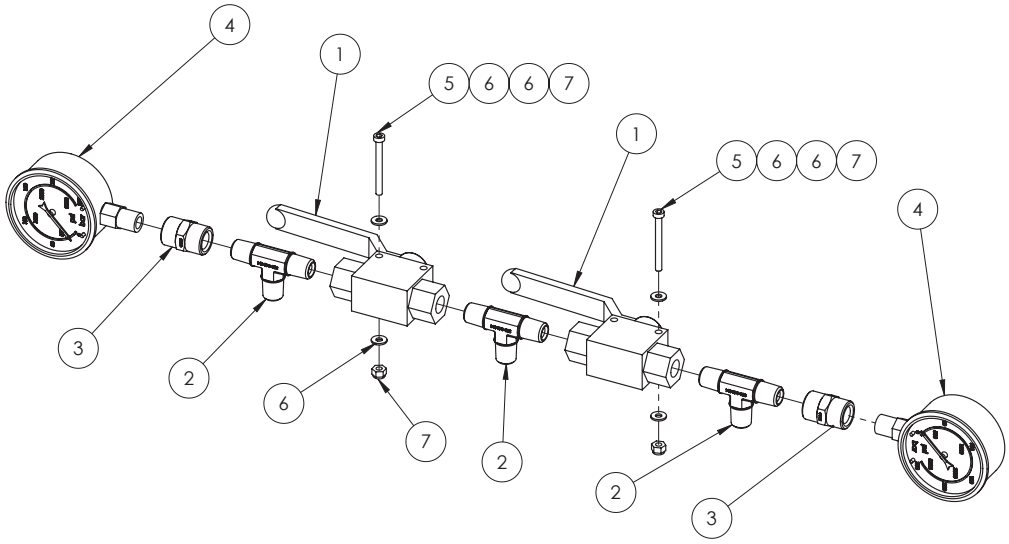

ITEM NO.	PART NUMBER	DESCRIPTION	QTY.
1	GA5078083	Valve, Ball, Hydraulic, 1/4" BSPP female ports	2
2	GA3500269	Hydraulic adaptor, Tee, 1/4" BSPT male x 1/4" BSPT male x 1/4" BSPT male	3
3	GA3500211	Hydraulic adaptor, Socket, 1/4" BSPT female x 1/4" BSPT female	2
4	GA5078076	Gauge, Pressure, 250 bar, 3500psi	2
5	GA5049800	SHCS M4 x 40 GR12.9 ZP	2
6	GA5020510	Washer 4mm Flat SS	4
7	GA5003501	Nut M4 Nyloc ZP	2

Hydraulic Yaw Charge Line

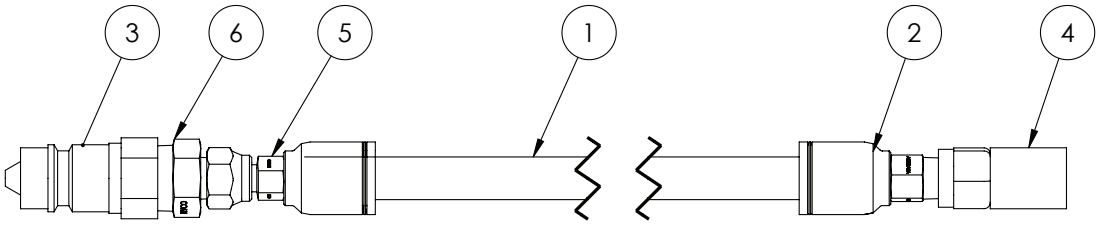

ITEM NO.	PART NUMBER	DESCRIPTION	QTY.
-	GA4903220	Hose assembly charge / discharge line for hydraulic yaw suspension	-
1	GA5049695	Hose, Hydraulic, 1/4", 2 wire, Black	1
2	GA3500394	Hydraulic crimp coupling, Straight, 1/4" hose x 1/4" BSPT male	1
3	GA5078000	Quick connect fitting, 1/2" male tip x 1/2" female thread	1
4	GA5077350	Adaptor, Direct Gauge, M16 x 2.0 female x 1/4" BSPP female	1
5	GA3500397	Hydraulic crimp coupling, Straight, 1/4" hose x 1/4" BSPP female swivel	1
6	GA3500221	Hydraulic adaptor, Nipple, 1/2" BSPT male x 1/4" BSPT male	1

Hydraulic Cylinder - Boom Tilt

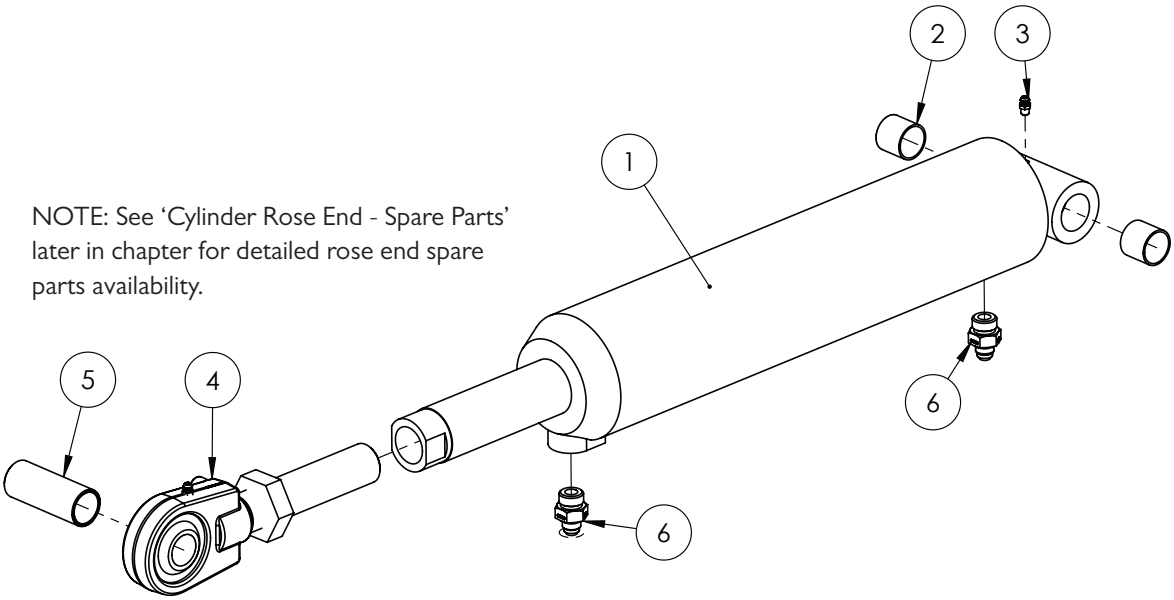

Quantities shown are per side.

ITEM NO.	PART NUMBER	DESCRIPTION	QTY.
-	GA5052730	Seal kit, suit 3 1/2" bore x 1 3/4" Rod	-
1	GA5065051	Hydraulic cylinder, 3 1/2" bore x 1 3/4" rod x 5" stroke	1
2	GA5065487	Glacier Bush 1" ID x 1" long	2
3	GA5012203	Grease nipple, Short, 1/4" UNF	2
4	GA5052762	Hydraulic tilt cylinder adjusting rod end, Ball End with nut, suit 3 1/2" x 5" tilt ram GA5065051	1
	GA5067605	Bearing, suit screw on rose end, GEG 30 ES 2RS	-
	GA5067610	Circlip, suit bearing screw on rose end, RTW 55	-
5	GA4572535	Bush, Rose end pivot wide suit tilt ram	1
6	GA3500359	Hydraulic adaptor, Nipple, 1/4" BSPT male x 3/4" UN male O-ring	2

Hydraulic Cylinder - Boom Lift

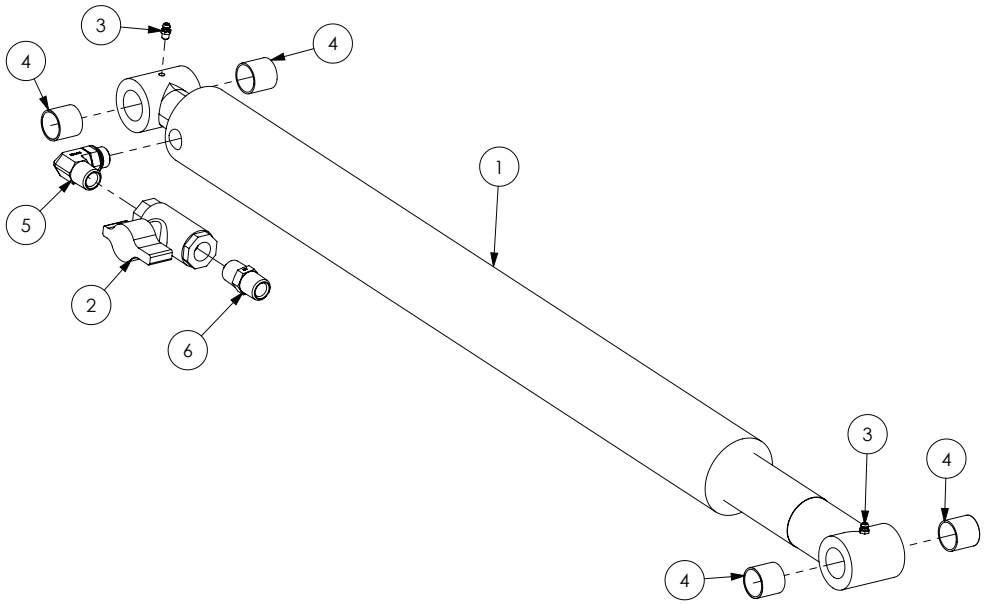

Quantities shown are per side.

ITEM NO.	PART NUMBER	DESCRIPTION	QTY.
-	GA5055510	Kit, Rod Eye, Weld on	-
-	GA5052731	Seal kit, suit 3” bore x 2 1/2” rod	-
1	GA5070081	Hydraulic cylinder, 3" bore, 2 1/2” rod, 26" stroke, pin eye ends with glacier bushes and grease nipples	1
2	GA5000835	Valve, Ball, Hydraulic, 1/2" female thread inlet / outlet	1
3	GA5012203	Grease nipple, Short, 1/4” UNF	2
4	GA5065487	Glacier Bush 1” ID x 1” long	4
5	GA3500349	Hydraulic adaptor, Elbow, 90 degree, 1/2” BSPT male x 3/4” UN male O-ring	1
6	GA3500223	Hydraulic adaptor, Nipple, 1/2” BSPT male x 1/2” BSPT male	1

Hydraulic Cylinder - Yaw

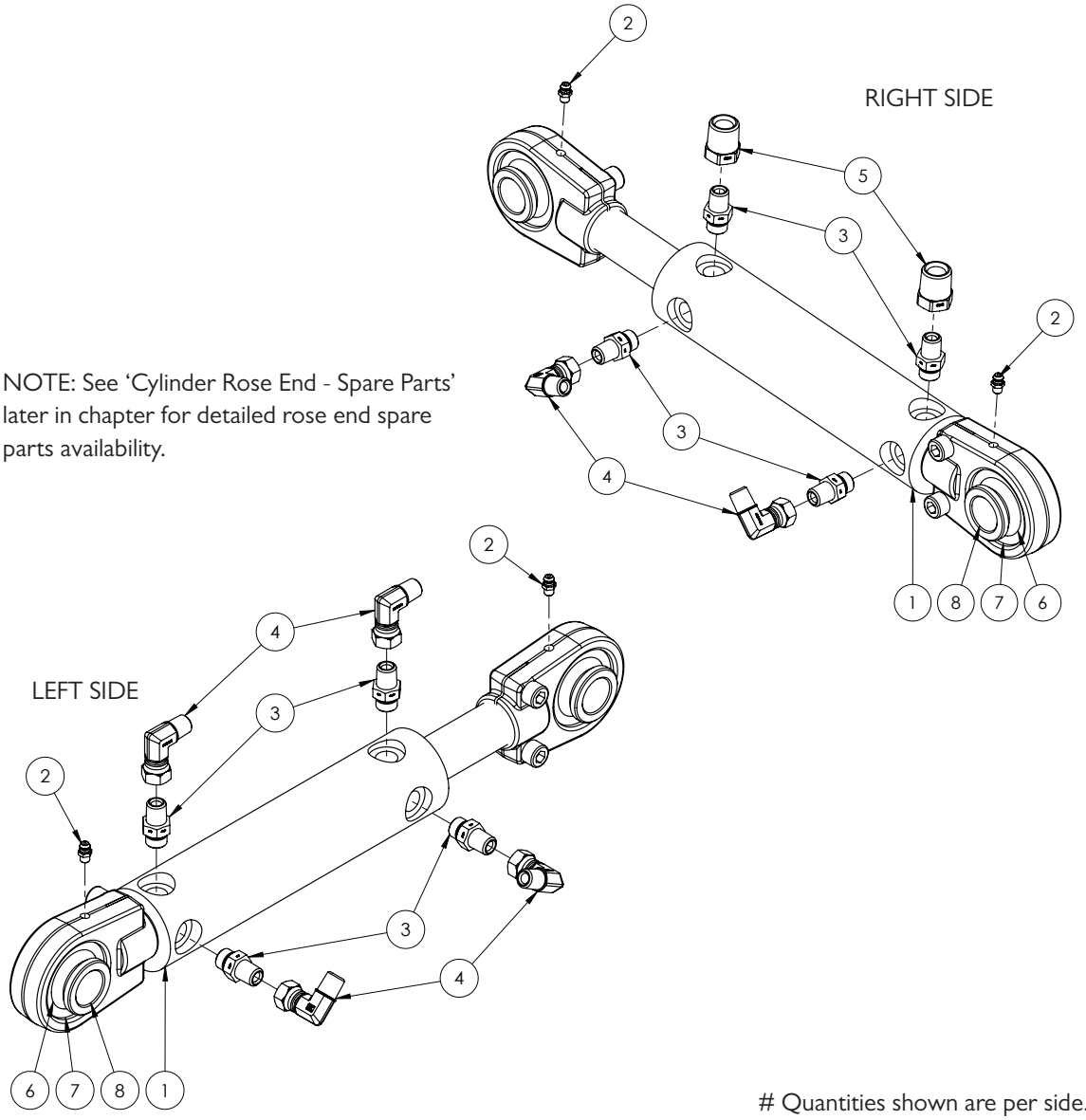

NOTE: See 'Cylinder Rose End - Spare Parts' later in chapter for detailed rose end spare parts availability.

Quantities shown are per side.

ITEM NO.	PART NUMBER	DESCRIPTION	QTY.
-	GA5052745	Seal Kit, suit 2" bore x 1 1/4" rod, suit GA5060817	-
1	GA5060817	Hydraulic cylinder, 2" bore x 1 1/4" rod x 117.5mm stroke, Spherical bearing ends	1
2	GA5012203	Grease nipple, Short, 1/4" UNF	2
3	GA3500358	Hydraulic adaptor, Nipple, 1/4" BSPT male x 9/16" UN male O-ring	4
4	GA3500332	Hydraulic adaptor, Elbow, 90 degree, 1/4" BSPT male x 1/4" BSPP female swivel	4
5	GA3500203	Hydraulic adaptor, Reducing bush, 1/2" BSPT male x 1/4" BSPT female	2
6	GA5067605	Bearing, suit screw on rose end	2
7	GA5067610	Circlip, suit bearing screw on rose end	2
8	GA5021925	Small bearing bush, Suit screw on rose end	2

Hydraulic Cylinder - Fold

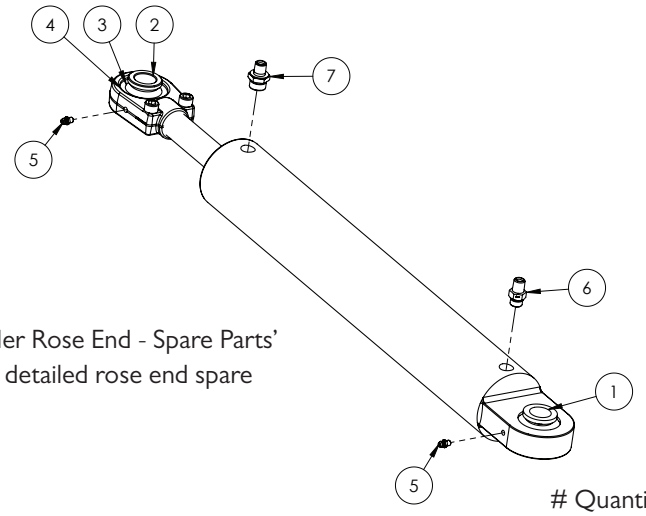

NOTE: See 'Cylinder Rose End - Spare Parts' later in chapter for detailed rose end spare parts availability.

Quantities shown are per side.

ITEM NO.	PART NUMBER	DESCRIPTION	QTY.
-	GA5018538	30-36 m - Hydraulic cylinder, 3" bore x 1 1/4" rod x 18" stroke	1
-	GA5052680	Seal Kit, suit 3" bore x 1 1/4" rod, suit cylinder GA5018538, GA5018540	-
-	GA3500098	Rod, suit Hydraulic Fold Cylinder GA5018538, GA5018540, GA5018542	-
1	GA5021930	Large bearing bush, Suit screw on rose end	1
2	GA5021925	Small bearing bush, Suit screw on rose end	3
3	GA5067605	Bearing, suit screw on rose end, GEG 30 ES 2RS	2
4	GA5067610	Circlip, suit bearing screw on rose end, RTW 55	2
5	GA5012203	Grease nipple, Short, 1/4" UNF	2
6	GA3500359	Hydraulic adaptor, Nipple, 1/4" BSPT male x 3/4" UN male O-ring	1
7	L068A	Reducing restrictor nipple, 3/4" UNO x 1/4" BSPT, 1.5mm orifice	1

Hydraulic Cylinder - Centre Leveling

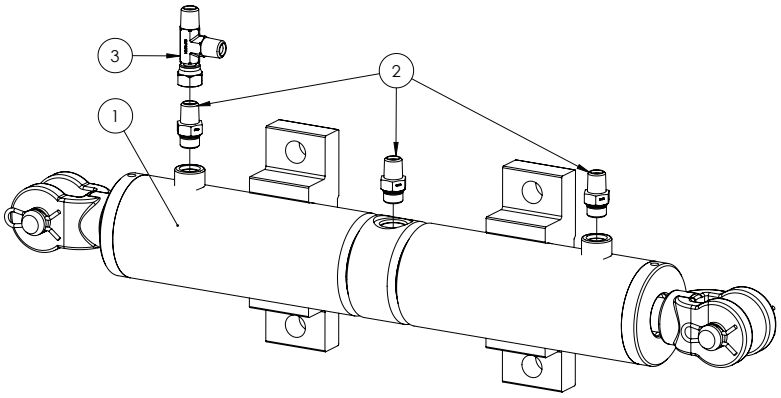

ITEM NO.	PART NUMBER	DESCRIPTION	QTY.
1	GA3500477	Hydraulic Cylinder, Centre Level	1
2	GA3500359	Hydraulic adaptor, Nipple, 1/4" BSPT male x 3/4" UN male O-ring	3
3	GA3500199	Hydraulic adaptor, Tee, 1/4" BSPT male x 1/4" BSPT male x 1/4" BSPP female	1

Hydraulic Cylinder - Bi-fold

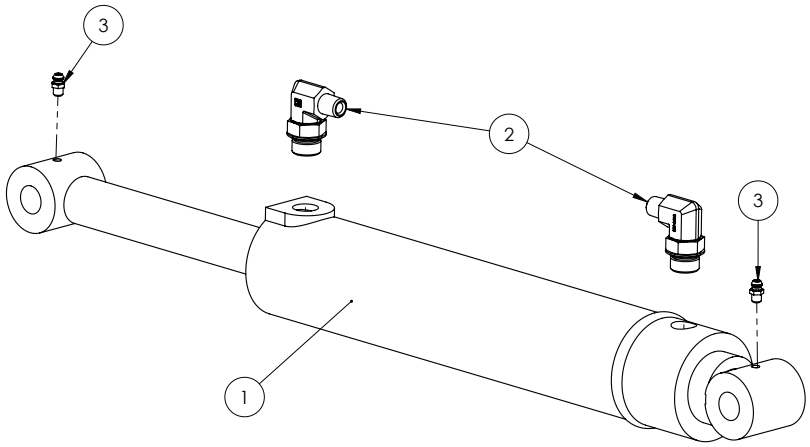

Quantities shown are per side.

ITEM NO.	PART NUMBER	DESCRIPTION	QTY.
-	GA5052733	Seal kit, suit 2 1/2” bore x 1 1/4” rod, suit GA5070845	-
1	GA5070845	Hydraulic Cylinder, 293mm stroke, 2 1/2" Bore, 1 1/4" Rod	1
2	GA3500348	Hydraulic adaptor, Elbow, 90 degree, 1/4” BSPT male x 3/4” UN male O-ring	2
3	GA5012203	Grease nipple, Short, 1/4” UNF	2

Cylinder Rose End - Spare Parts

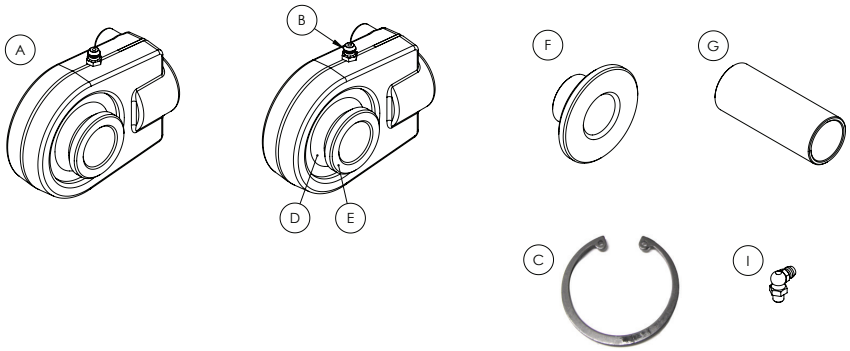

NOTE: Item H contains items C,D & E plus snap rings shown on the lower right.

ITEM NO.	PART NUMBER	DESCRIPTION	QTY.
A	GA5052965	Complete Rose end, M28 Screw on, suit Hydraulic cylinder & Delta link, including Bushes (Item E)	1
B	GA5012203	Grease nipple, Short, 1/4” UNF	1
C	GA5067610	Circlip, suit bearing screw on rose end, RTW 55	2
D	GA5067605	Bearing, suit screw on rose end, GEG 30 ES 2RS	1
E	GA5021925	Small bearing bush, Suit screw on rose end, Hypower, R-10424	2
F	GA5021930	Large bearing bush, Suit screw on rose end, Hypower, R-10429	2
G	GA4572535	Bush, Rose end pivot wide suit tilt ram	1
H	GA5052966	Bearing Kit, suit screw on rose end, cylinders and delta links	1
I	GA5009637	Grease nipple, Elbow, 90 degree, 1/4" UNF male	1

NOTE: Quantities shown represent the number of parts needed per rose end and depend on your configuration e.g. the rose end will have either 2x Item E or 2x Item F but not both.

NORAC Assembly

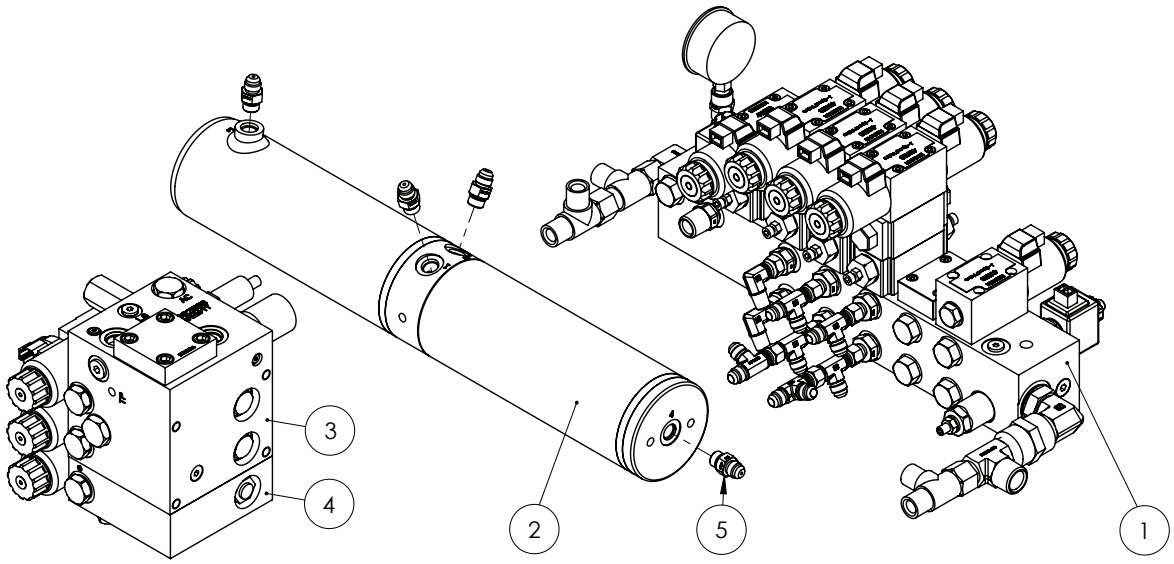

ITEM NO.	PART NUMBER	DESCRIPTION	QTY.
1	*	Spool valve manifold	1
2	GA3500136	Hydraulic cylinder, Wing roll with position sensor, Norac	1
3	GA3500138	Valve block, 2 station assembly, Open centre, Proportional, DT 4 Bolt	1
	GA3500164	Valve block, 2 station assembly, Closed centre, Load sense, DT 4 Bolt	1
4	GA3500139	Valve block, expansion assembly, DPOC PROP DT 4 bolt, Norac	1
5	GA3500146	Hydraulic adaptor, Nipple, 9/16" JIC male x 9/16" UN male O-ring	4

* Sub-assembly on following pages

NORAC Valve Block Assembly

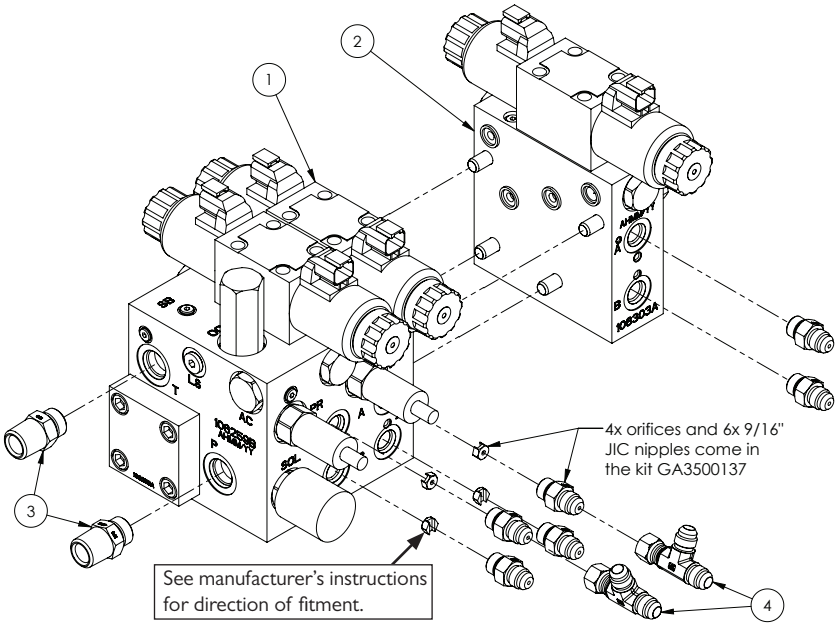

ITEM NO.	PART NUMBER	DESCRIPTION	QTY.
-	GA3500827	Solenoid Poppet Valve, Deutsch Connector with Override	-
-	GA3500137	Hydraulic fitting kit, 12 parts, GN1, Norac	-
1	GA3500138	Valve block, 2 station assembly, Open centre, Proportional, DT 4 Bolt	1
2	GA3500139	Valve block, expansion assembly, DPOC PROP DT 4 bolt, Norac	1
3	GA3500363	Hydraulic adaptor, Nipple, 1/2" BSPT male x 3/4" UN male O-ring	1
4	GA3500144	Hydraulic adaptor, Tee, 9/16" JIC male x 9/16" JIC male x 9/16" JIC female swivel	1

Spool Block - Parts in Common

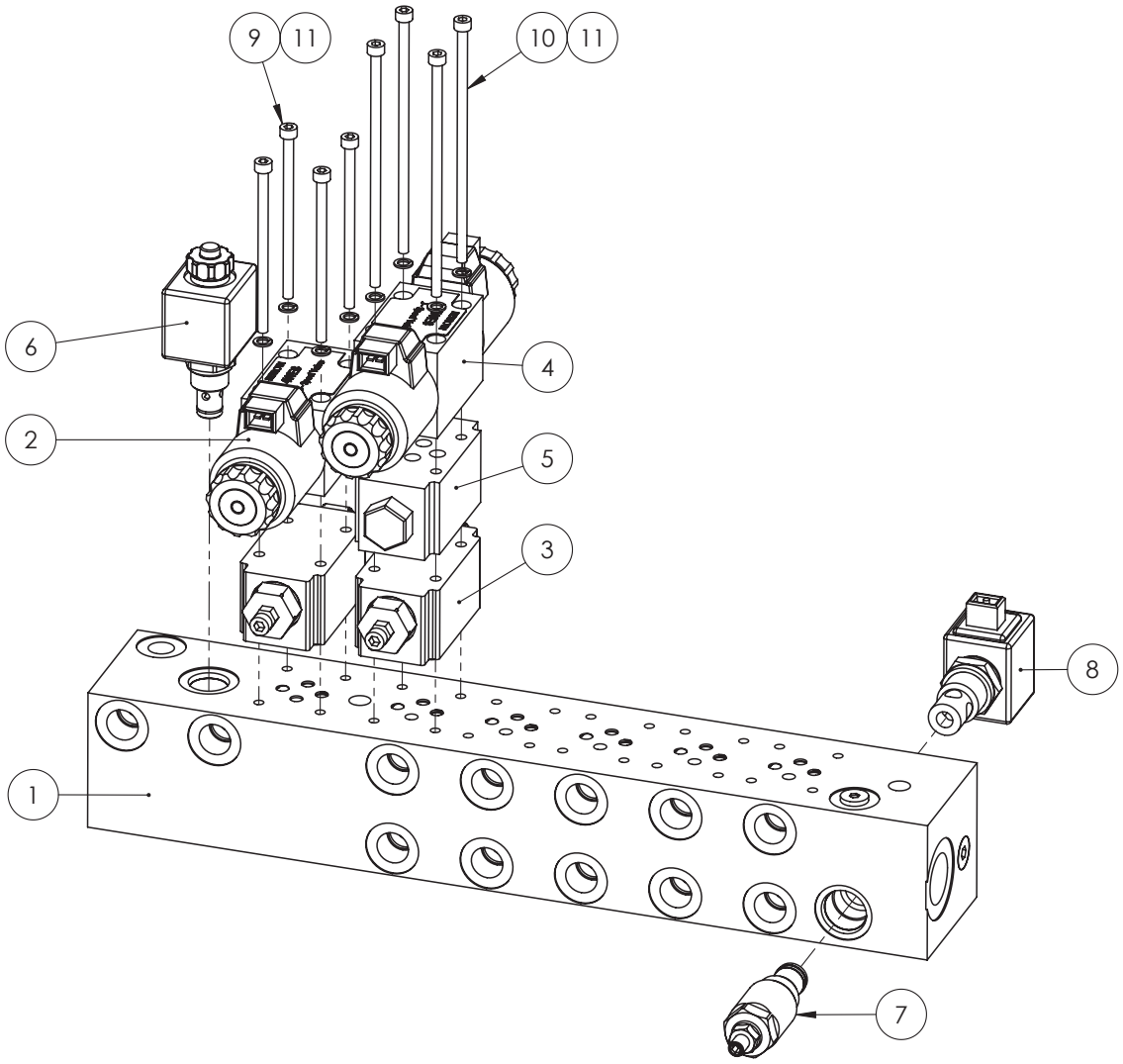

ITEM NO.	PART NUMBER	DESCRIPTION	QTY.
-	GA5047750	Solenoid coil, 12V DC, Slip on, 2 pin AMP	-
1	GA5047759	Manifold, Blank, 6 Station spool, Bare	1
2	GA5047727	Valve Hydraulic, J spool, 12V, Single, 2 pin amp connector	1
3	GA5047581	Hydraulic Valve, Flow control, NG6 A+B, Suit spool	2
4	GA5047726	Valve solenoid J spool 12v 2 pin amp connector	1
5	GA5017335	Valve check modular	1
6	GA5047734	Valve cart hyd sol poppet 2/2-8-2 cav 12vdc 2 pin amp without manual overide, Boom lower	1
7	GA5047645	Cartridge Valve, Hydraulic Pressure Relief, Pilot Operated	1
8	GA5047737	Valve Cartridge, Hydraulic, Poppet, Solenoid, AMP Plug, 12V DC, Normally Open (Used for Open Centre System)	1
9	GA5067050	SHCS M5 x 90 GR12.9 ZP	4
10	GA5048570	SHCS M5 x 130 GR12.9 ZP	4
11	GA5003629	Washer 5mm Spring SS	8

Spool Block - Diff Lock

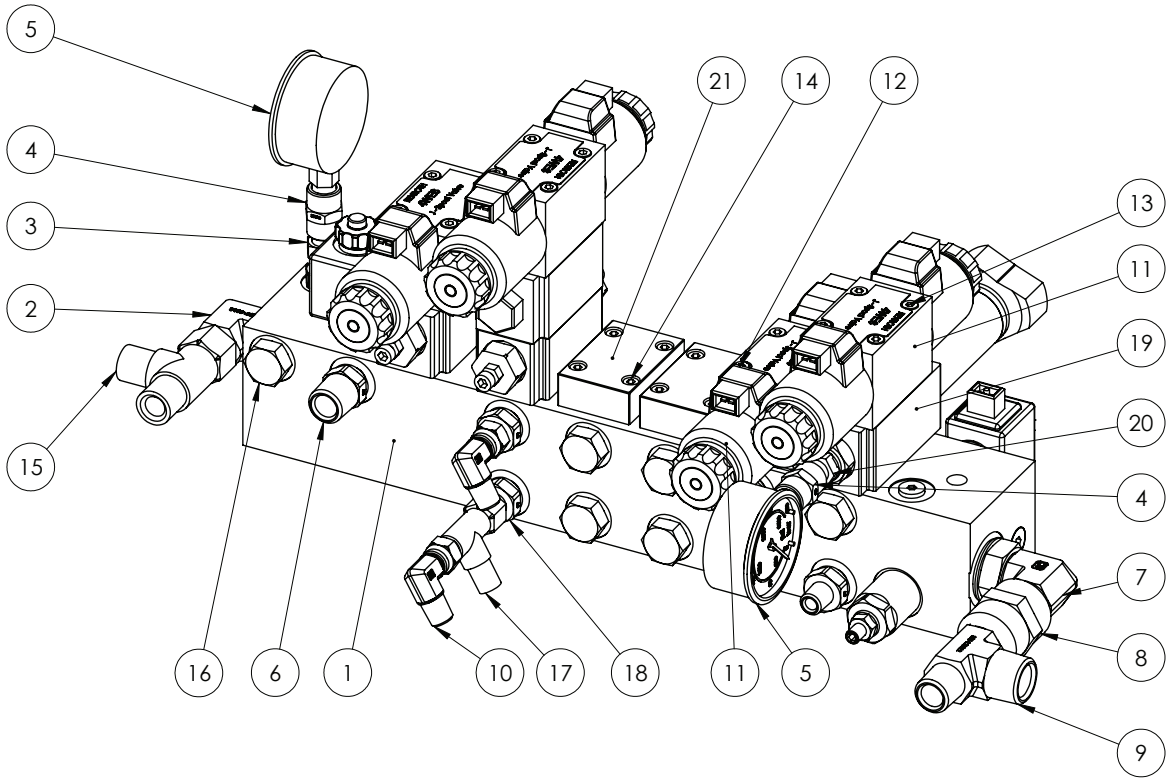

ITEM NO.	PART NUMBER	DESCRIPTION	QTY.
1	GA5047741	Manifold Assembly Option THREE Normally open Fitted with AMP plug coils	1
2	GA3500324	Hydraulic adaptor, Elbow, 90 degree, 1/2" BSPT male x 3/4" BSPP male O-ring	1
3	-	Gauge fitment no longer requires adaptor	-
4	-	Gauge fitment no longer requires adaptor	-
5	GA5078076	Gauge, Pressure, 250 bar, 3500psi	2
6	GA3500309	Hydraulic adaptor, Nipple, 1/2" BSPT male x 3/8" BSPP male	1
7	GA3500325	Hydraulic adaptor, Elbow, 90 degree, 3/4" BSPT male x 3/4" BSPP male O-ring	1
8	GA3500213	Hydraulic adaptor, Socket, 3/4" BSPT female x 3/4" BSPT female	1
9	GA3500272	Hydraulic adaptor, Tee, 3/4" BSPT male x 1/2" BSPT male x 3/4" BSPT male	1
10	GA3500332	Hydraulic adaptor, Elbow, 90 degree, 1/4" BSPT male x 1/4" BSPP female swivel	2
11	GA5047726	Valve solenoid J spool 12v 2 pin amp connector	2
12	GA5054410	SHCS M5 x 50 GR12.9 ZP	4
13	GA5067050	SHCS M5 x 90 GR12.9 ZP	4
14	GA5003581	SHCS M5 x 20 SS A2-70	8

Continued over page

Spool Block - Diff Lock

ITEM NO.	PART NUMBER	DESCRIPTION	QTY.
15	GA3500200	Hydraulic adaptor, Tee, 1/2” BSPT male x 1/2” BSPT male x 1/2” BSPP female swivel	1
16	GA3500300	Hydraulic adaptor, Plug, 3/8” BSPP male	6
17	GA3500199	Hydraulic adaptor, Tee, 1/4 BSPT male x 1/4 BSPT male x 1/4 BSPP female	1
18	GA3500307	Hydraulic adaptor, Nipple, 1/4” BSPT male x 3/8” BSPP male	5
19	GA5017373	Valve reducing modular	1
20	GA3500306	Hydraulic adaptor, Nipple, 1/4” BSPT male x 1/4” BSPP male	1
21	GA5047335	Plate blanking, Spool valve NG6, MS-P6/314128680, Bosch	2

Spool Block - Diff Lock, Tilt

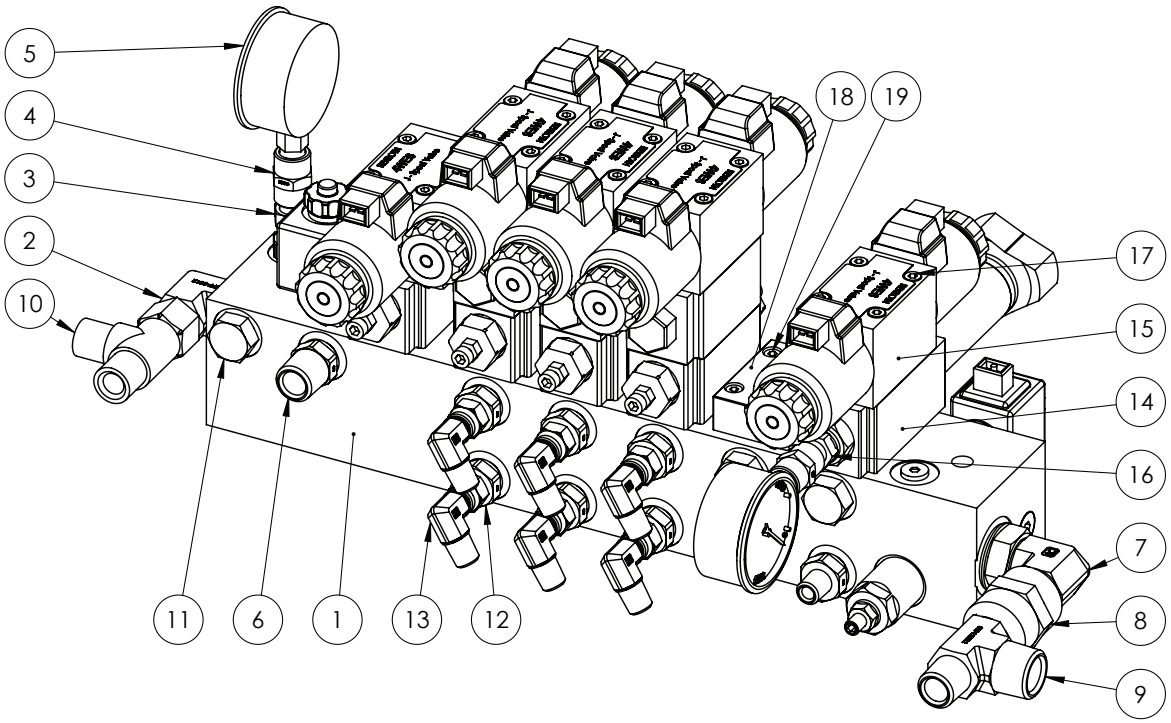

ITEM NO.	PART NUMBER	DESCRIPTION	QTY.
1	GA5047741	Manifold Assembly Option THREE Normally open Fitted with AMP plug coils	1
2	GA3500324	Hydraulic adaptor, Elbow, 90 degree, 1/2” BSPT male x 3/4” BSPP male O-ring	1
3	-	Gauge fitment no longer requires adaptor	-
4	-	Gauge fitment no longer requires adaptor	-
5	GA5078076	Gauge, Pressure, 250 bar, 3500psi	2
6	GA3500309	Hydraulic adaptor, Nipple, 1/2” BSPT male x 3/8” BSPP male	1
7	GA3500325	Hydraulic adaptor, Elbow, 90 degree, 3/4” BSPT male x 3/4” BSPP male O-ring	1
8	GA3500213	Hydraulic adaptor, Socket, 3/4” BSPT female x 3/4” BSPT female	1
9	GA3500272	Hydraulic adaptor, Tee, 3/4” BSPT male x 1/2” BSPT male x 3/4” BSPT male	1
10	GA3500200	Hydraulic adaptor, Tee, 1/2” BSPT male x 1/2” BSPT male x 1/2” BSPP female swivel	1
11	GA3500300	Hydraulic adaptor, Plug, 3/8” BSPP male	4
12	GA3500307	Hydraulic adaptor, Nipple, 1/4” BSPT male x 3/8” BSPP male	7
13	GA3500332	Hydraulic adaptor, Elbow, 90 degree, 1/4” BSPT male x 1/4” BSPP female swivel	6

Continued over page

Spool Block - Diff Lock, Tilt

ITEM NO.	PART NUMBER	DESCRIPTION	QTY.
14	GA5017373	Valve reducing modular	1
15	GA5047726	Valve solenoid J spool 12v 2 pin amp connector, Bosch	1
16	GA3500306	Hydraulic adaptor, Nipple, 1/4” BSPT male x 1/4” BSPP male	1
17	GA5067050	SHCS M5 x 90 GR12.9 ZP	4
18	GA5047335	Plate blanking	1
19	GA5003581	SHCS M5 x 20 SS A2-70	4

Spool Block - Diff Lock, Bi-fold

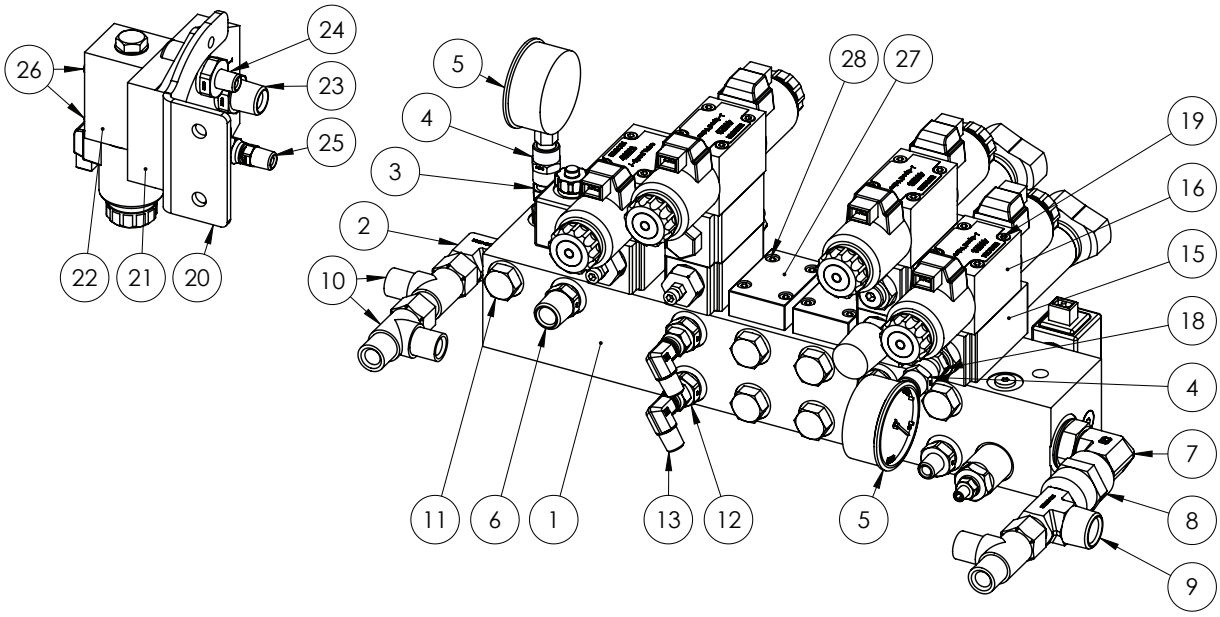

ITEM NO.	PART NUMBER	DESCRIPTION	QTY.
1	GA5047741	Manifold Assembly Option THREE Normally open Fitted with AMP plug coils	1
2	GA3500324	Hydraulic adaptor, Elbow, 90 degree, 1/2" BSPT male x 3/4" BSPP male O-ring	1
3	-	Gauge fitment no longer requires adaptor	-
4	-	Gauge fitment no longer requires adaptor	-
5	GA5078076	Gauge, Pressure, 250 bar, 3500psi	2
6	GA3500309	Hydraulic adaptor, Nipple, 1/2" BSPT male x 3/8" BSPP male	1
7	GA3500325	Hydraulic adaptor, Elbow, 90 degree, 3/4" BSPT male x 3/4" BSPP male O-ring	1
8	GA3500213	Hydraulic adaptor, Socket, 3/4" BSPT female x 3/4" BSPT female	1
9	GA3500272	Hydraulic adaptor, Tee, 3/4" BSPT male x 1/2" BSPT male x 3/4" BSPT male	1
10	GA3500200	Hydraulic adaptor, Tee, 1/2" BSPT male x 1/2" BSPT male x 1/2" BSPP female swivel	3
11	GA3500300	Hydraulic adaptor, Plug, 3/8" BSPP male	6
12	GA3500307	Hydraulic adaptor, Nipple, 1/4" BSPT male x 3/8" BSPP male	5
13	GA3500332	Hydraulic adaptor, Elbow, 90 degree, 1/4" BSPT male x 1/4" BSPP female swivel	2
14	GA5047581	Hydraulic Valve, Flow control, NG6 A+B, Suit spool	1
15	GA5017373	Valve reducing modular	2
16	GA5047726	Valve solenoid J spool 12v 2 pin amp connector	2

Continued over page

Spool Block - Diff Lock, Bi-fold

ITEM NO.	PART NUMBER	DESCRIPTION	QTY.
17	GA5048570	SHCS M5 x 130 GR12.9 ZP	4
18	GA3500306	Hydraulic adaptor, Nipple, 1/4" BSPT male x 1/4" BSPP male	1
19	GA5067050	SHCS M5 x 90 GR12.9 ZP	4
20	GA4509365	Plate, Hydraulic block Mount, Center Lock	1
21	GA5016139	Hydraulic manifold, Single valve port, 1/2" inlets / outlets	1
22	GA5047756	Valve, D spool hydraulic solenoid, centre level, 2 pin AMP	1
23	GA3500310	Hydraulic adaptor, Nipple, 1/2" BSPT male x 1/2" BSPP male	2
24	GA3500308	Hydraulic adaptor, Nipple, 1/4" BSPT male x 1/2" BSPP male	2
25	GA3500328	Hydraulic adaptor, Nipple, 1/4" BSPT male x 1/4" BSPP female swivel	1
26	GA5054410	SHCS M5 x 50 GR12.9 ZP	4
27	GA5047335	Plate blanking	2
28	GA5003581	SHCS M5 x 20 SS A2-70	8

Spool Block - Diff Lock, Bi-fold, Tilt

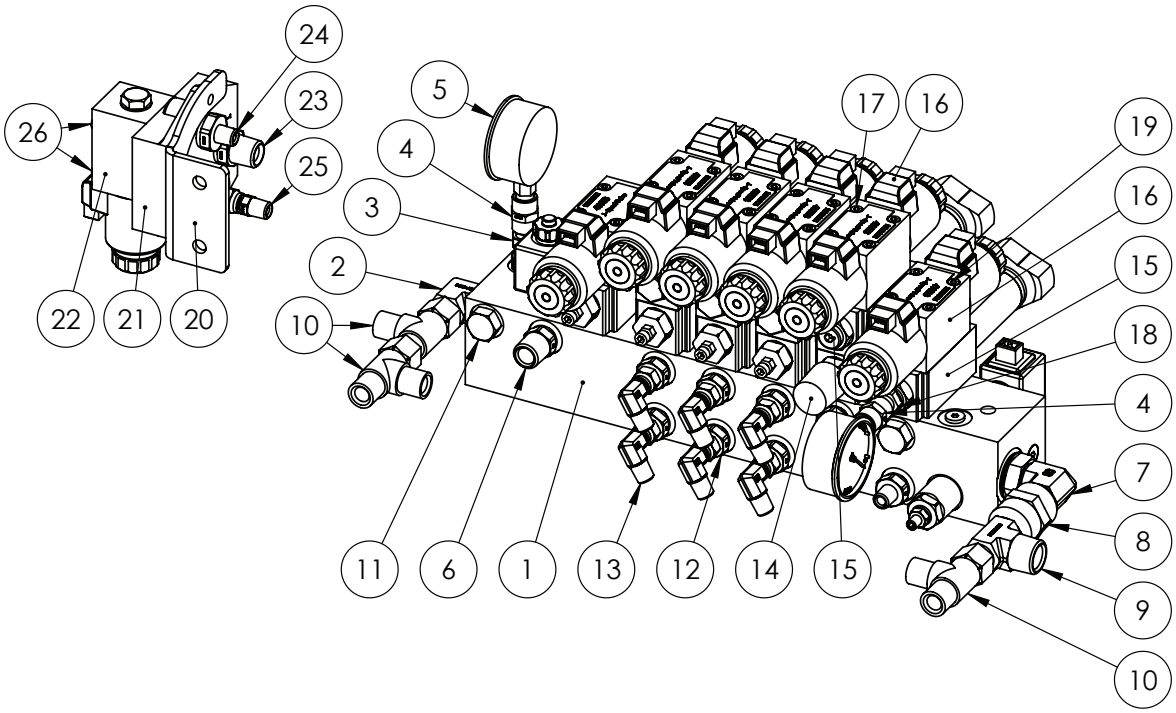

ITEM NO.	PART NUMBER	DESCRIPTION	QTY.
1	GA5047741	Manifold Assembly Option THREE Normally open Fitted with AMP plug coils	1
2	GA3500324	Hydraulic adaptor, Elbow, 90 degree, 1/2" BSPT male x 3/4" BSPP male O-ring	1
3	-	Gauge fitment no longer requires adaptor	-
4	-	Gauge fitment no longer requires adaptor	-
5	GA5078076	Gauge, Pressure, 250 bar, 3500psi	2
6	GA3500309	Hydraulic adaptor, Nipple, 1/2" BSPT male x 3/8" BSPP male	1
7	GA3500325	Hydraulic adaptor, Elbow, 90 degree, 3/4" BSPT male x 3/4" BSPP male O-ring	1
8	GA3500213	Hydraulic adaptor, Socket, 3/4" BSPT female x 3/4" BSPT female	1
9	GA3500272	Hydraulic adaptor, Tee, 3/4" BSPT male x 1/2" BSPT male x 3/4" BSPT male	1
10	GA3500200	Hydraulic adaptor, Tee, 1/2" BSPT male x 1/2" BSPT male x 1/2" BSPP female swivel	3
11	GA3500300	Hydraulic adaptor, Plug, 3/8" BSPP male	2
12	GA3500307	Hydraulic adaptor, Nipple, 1/4" BSPT male x 3/8" BSPP male	9
13	GA3500332	Hydraulic adaptor, Elbow, 90 degree, 1/4" BSPT male x 1/4" BSPP female swivel	6

Continued over page

Spool Block - Diff Lock, Bi-fold, Tilt

ITEM NO.	PART NUMBER	DESCRIPTION	QTY.
14	GA5047581	Hydraulic Valve, Flow control, NG6 A+B, Suit spool	1
15	GA5017373	Valve reducing modular	2
16	GA5047726	Valve solenoid J spool 12v 2 pin amp connector	2
17	GA5048570	SHCS M5 x 130 GR12.9 ZP	4
18	GA3500306	Hydraulic adaptor, Nipple, 1/4” BSPT male x 1/4” BSPP male	1
19	GA5067050	SHCS M5 x 90 GR12.9 ZP	4
20	GA4509365	Plate, Hydraulic block Mount, Center Lock	1
21	GA5016139	Hydraulic manifold, Single valve port, 1/2” inlets / outlets	1
22	GA5047756	Valve, D spool hydraulic solenoid, centre level, 2 pin AMP	1
23	GA3500310	Hydraulic adaptor, Nipple, 1/2” BSPT male x 1/2” BSPP male	2
24	GA3500308	Hydraulic adaptor, Nipple, 1/4” BSPT male x 1/2” BSPP male	2
25	GA3500328	Hydraulic adaptor, Nipple, 1/4” BSPT male x 1/4” BSPP female swivel	1
26	GA5054410	SHCS M5 x 50 GR12.9 ZP	4

Spool Block - Diff Lock, Bi-fold, NORAC Passive

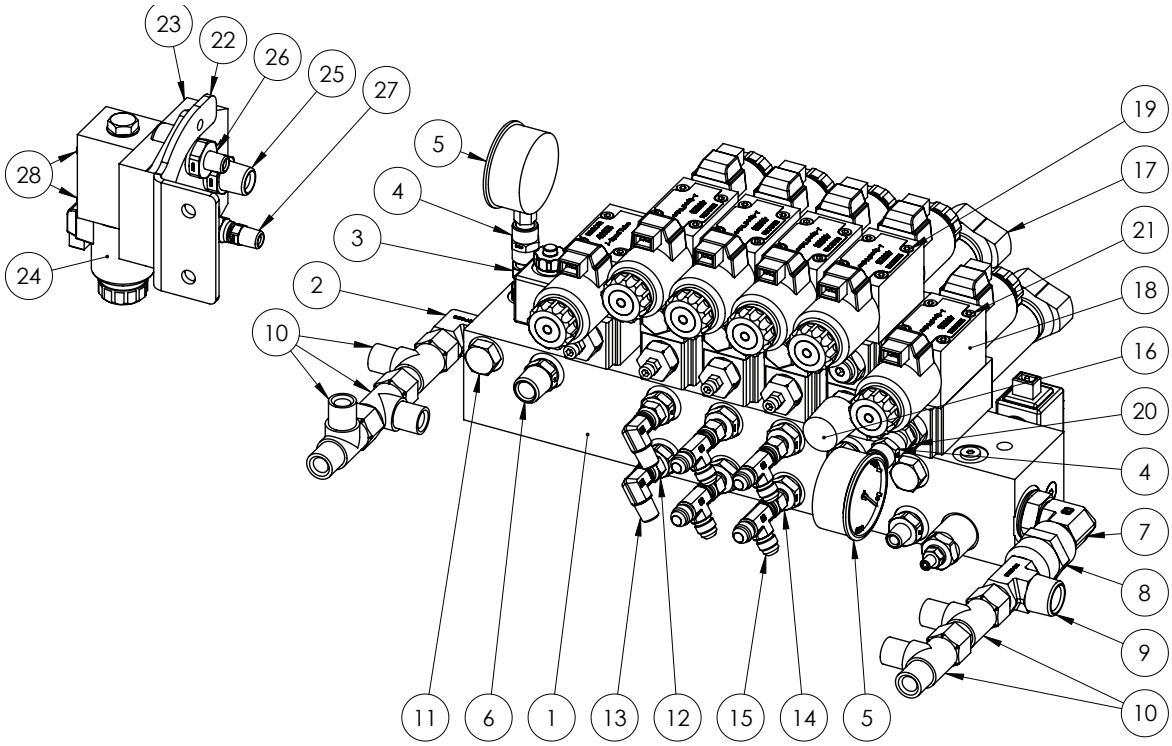

ITEM NO.	PART NUMBER	DESCRIPTION	QTY.
1	GA5047741	Manifold Assembly Option THREE Normally open Fitted with AMP plug coils	1
2	GA3500324	Hydraulic adaptor, Elbow, 90 degree, 1/2" BSPT male x 3/4" BSPP male O-ring	1
3	-	Gauge fitment no longer requires adaptor	-
4	-	Gauge fitment no longer requires adaptor	-
5	GA5078076	Gauge, Pressure, 250 bar, 3500psi	2
6	GA3500309	Hydraulic adaptor, Nipple, 1/2" BSPT male x 3/8" BSPP male	1
7	GA3500325	Hydraulic adaptor, Elbow, 90 degree, 3/4" BSPT male x 3/4" BSPP male O-ring	1
8	GA3500213	Hydraulic adaptor, Socket, 3/4" BSPT female x 3/4" BSPT female	1
9	GA3500272	Hydraulic adaptor, Tee, 3/4" BSPT male x 1/2" BSPT male x 3/4" BSPT male	1
10	GA3500200	Hydraulic adaptor, Tee, 1/2" BSPT male x 1/2" BSPT male x 1/2" BSPP female swivel	5
11	GA3500300	Hydraulic adaptor, Plug, 3/8" BSPP male	2
12	GA3500307	Hydraulic adaptor, Nipple, 1/4" BSPT male x 3/8" BSPP male	5
13	GA3500332	Hydraulic adaptor, Elbow, 90 degree, 1/4" BSPT male x 1/4" BSPP female swivel	2

Continued over page

Spool Block - Diff Lock, Bi-fold, NORAC Passive

ITEM NO.	PART NUMBER	DESCRIPTION	QTY.
14	GA3500145	Hydraulic adaptor, Nipple, 3/8” BSPP male x 9/16” JIC male	4
15	GA3500144	Hydraulic adaptor, Tee, 9/16” JIC male x 9/16” JIC male x 9/16” JIC female swivel	4
16	GA5047581	Hydraulic Valve, Flow control, NG6 A+B, Suit spool	1
17	GA5017373	Valve reducing modular	2
18	GA5047726	Valve solenoid J spool 12v 2 pin amp connector	2
19	GA5048570	SHCS M5 x 130 GR12.9 ZP	4
20	GA3500306	Hydraulic adaptor, Nipple, 1/4” BSPT male x 1/4” BSPP male	1
21	GA5067050	SHCS M5 x 90 GR12.9 ZP	4
22	GA4509365	Plate, Hydraulic block Mount, Center Lock	1
23	GA5016139	Hydraulic manifold, Single valve port, 1/2” inlets / outlets	1
24	GA5047756	Valve, D spool hydraulic solenoid, centre level, 2 pin AMP	1
25	GA3500310	Hydraulic adaptor, Nipple, 1/2” BSPT male x 1/2” BSPP male	2
26	GA3500308	Hydraulic adaptor, Nipple, 1/4” BSPT male x 1/2” BSPP male	2
27	GA3500328	Hydraulic adaptor, Nipple, 1/4” BSPT male x 1/4” BSPP female swivel	1
28	GA5054410	SHCS M5 x 50 GR12.9 ZP	4

Spool Block - Diff Lock, Bi-fold, NORAC Active

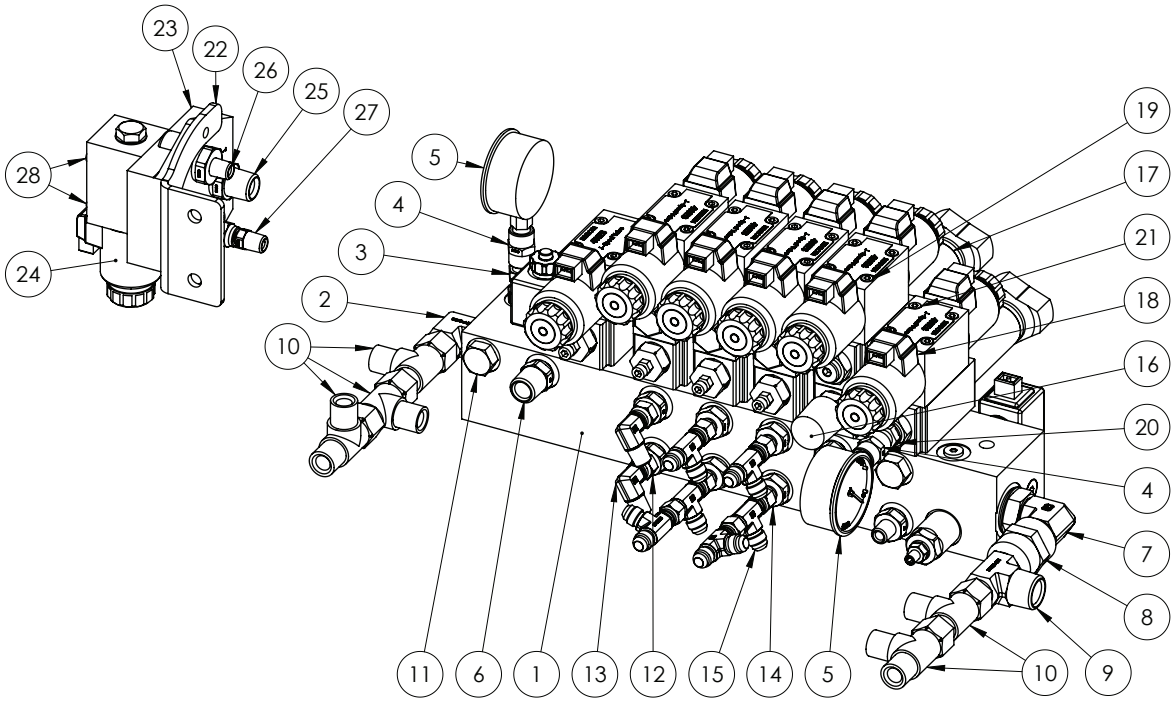

ITEM NO.	PART NUMBER	DESCRIPTION	QTY.
1	GA5047741	Manifold Assembly Option THREE Normally open Fitted with AMP plug coils	1
2	GA3500324	Hydraulic adaptor, Elbow, 90 degree, 1/2" BSPT male x 3/4" BSPP male O-ring	1
3	-	Gauge fitment no longer requires adaptor	-
4	-	Gauge fitment no longer requires adaptor	-
5	GA5078076	Gauge, Pressure, 250 bar, 3500psi	2
6	GA3500309	Hydraulic adaptor, Nipple, 1/2" BSPT male x 3/8" BSPP male	1
7	GA3500325	Hydraulic adaptor, Elbow, 90 degree, 3/4" BSPT male x 3/4" BSPP male O-ring	1
8	GA3500213	Hydraulic adaptor, Socket, 3/4" BSPT female x 3/4" BSPT female	1
9	GA3500272	Hydraulic adaptor, Tee, 3/4" BSPT male x 1/2" BSPT male x 3/4" BSPT male	1
10	GA3500200	Hydraulic adaptor, Tee, 1/2" BSPT male x 1/2" BSPT male x 1/2" BSPP female swivel	5
11	GA3500300	Hydraulic adaptor, Plug, 3/8" BSPP male	2
12	GA3500307	Hydraulic adaptor, Nipple, 1/4" BSPT male x 3/8" BSPP male	5
13	GA3500332	Hydraulic adaptor, Elbow, 90 degree, 1/4" BSPT male x 1/4" BSPP female swivel	2

Continued over page

Spool Block - Diff Lock, Bi-fold, NORAC Active

ITEM NO.	PART NUMBER	DESCRIPTION	QTY.
14	GA3500145	Hydraulic adaptor, Nipple, 3/8” BSPP male x 9/16” JIC male	4
15	GA3500144	Hydraulic adaptor, Tee, 9/16” JIC male x 9/16” JIC male x 9/16” JIC female swivel	6
16	GA5047581	Hydraulic Valve, Flow control, NG6 A+B, Suit spool	1
17	GA5017373	Valve reducing modular	2
18	GA5047726	Valve solenoid J spool 12v 2 pin amp connector	2
19	GA5048570	SHCS M5 x 130 GR12.9 ZP	4
20	GA3500306	Hydraulic adaptor, Nipple, 1/4” BSPT male x 1/4” BSPP male	1
21	GA5067050	SHCS M5 x 90 GR12.9 ZP	4
22	GA4509365	Plate, Hydraulic block Mount, Center Lock	1
23	GA5016139	Hydraulic manifold, Single valve port, 1/2” inlets / outlets	1
24	GA5047756	Valve, D spool hydraulic solenoid, centre level, 2 pin AMP	1
25	GA3500310	Hydraulic adaptor, Nipple, 1/2” BSPT male x 1/2” BSPP male	2
26	GA3500308	Hydraulic adaptor, Nipple, 1/4” BSPT male x 1/2” BSPP male	2
27	GA3500328	Hydraulic adaptor, Nipple, 1/4” BSPT male x 1/4” BSPP female swivel	1
28	GA5054410	SHCS M5 x 50 GR12.9 ZP	4

Spool Block - Diff Lock, NORAC, Passive

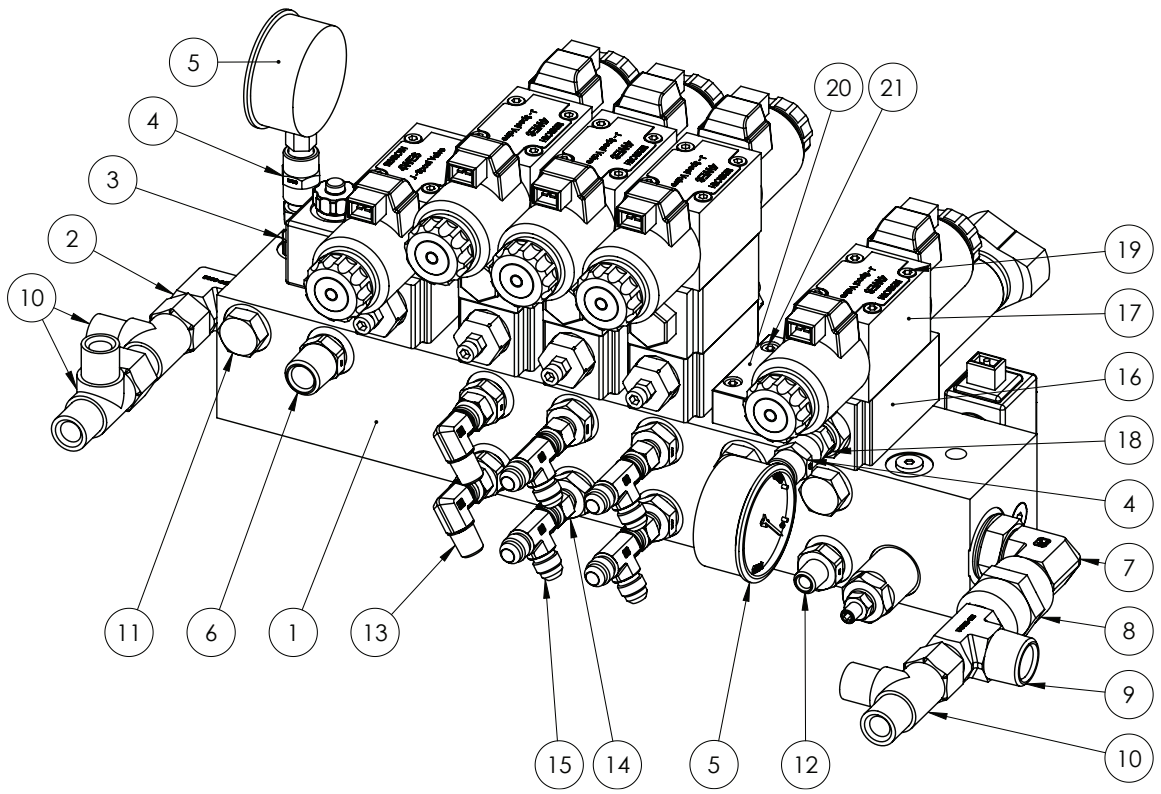

ITEM NO.	PART NUMBER	DESCRIPTION	QTY.
1	GA5047741	Manifold Assembly Option THREE Normally open Fitted with AMP plug coils	1
2	GA3500324	Hydraulic adaptor, Elbow, 90 degree, 1/2" BSPT male x 3/4" BSPP male O-ring	1
3	-	Gauge fitment no longer requires adaptor	-
4	-	Gauge fitment no longer requires adaptor	-
5	GA5078076	Gauge, Pressure, 250 bar, 3500psi	2
6	GA3500309	Hydraulic adaptor, Nipple, 1/2" BSPT male x 3/8" BSPP male	1
7	GA3500325	Hydraulic adaptor, Elbow, 90 degree, 3/4" BSPT male x 3/4" BSPP male O-ring	1
8	GA3500213	Hydraulic adaptor, Socket, 3/4" BSPT female x 3/4" BSPT female	1
9	GA3500272	Hydraulic adaptor, Tee, 3/4" BSPT male x 1/2" BSPT male x 3/4" BSPT male	1
10	GA3500200	Hydraulic adaptor, Tee, 1/2" BSPT male x 1/2" BSPT male x 1/2" BSPP female swivel	3
11	GA3500300	Hydraulic adaptor, Plug, 3/8" BSPP male	4
12	GA3500307	Hydraulic adaptor, Nipple, 1/4" BSPT male x 3/8" BSPP male	3
13	GA3500332	Hydraulic adaptor, Elbow, 90 degree, 1/4" BSPT male x 1/4" BSPP female swivel	2

Continued over page

Spool Block - Diff Lock, NORAC, Passive

ITEM NO.	PART NUMBER	DESCRIPTION	QTY.
14	GA3500145	Hydraulic adaptor, Nipple, 3/8” BSPP male x 9/16” JIC male	4
15	GA3500144	Hydraulic adaptor, Tee, 9/16” JIC male x 9/16” JIC male x 9/16” JIC female swivel	4
16	GA5017373	Valve reducing modular	1
17	GA5047726	Valve solenoid J spool 12v 2 pin amp connector	1
18	GA3500306	Hydraulic adaptor, Nipple, 1/4” BSPT male x 1/4” BSPP male	1
19	GA5067050	SHCS M5 x 90 GR12.9 ZP	4
20	GA5047335	Plate blanking	1
21	GA5003581	SHCS M5 x 20 SS A2-70	4

Spool Block - Diff Lock, NORAC, Active

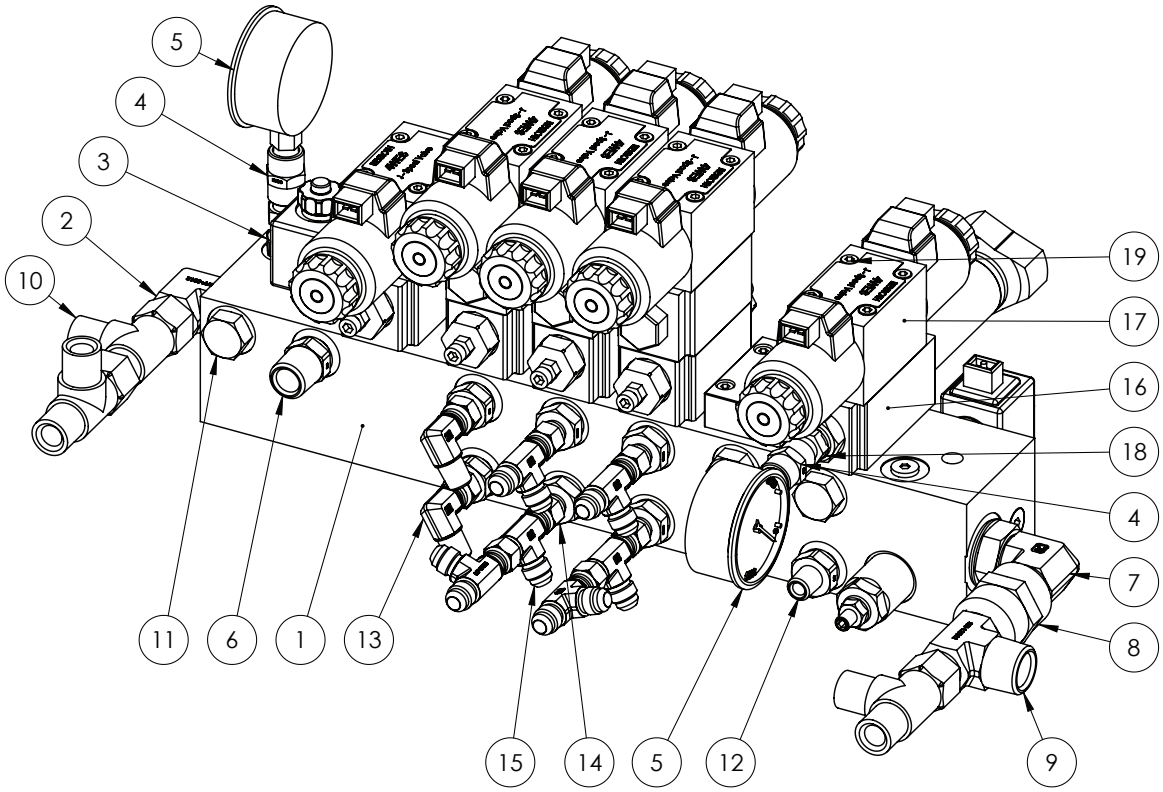

ITEM NO.	PART NUMBER	DESCRIPTION	QTY.
1	GA5047741	Manifold Assembly Option THREE Normally open Fitted with AMP plug coils	1
2	GA3500324	Hydraulic adaptor, Elbow, 90 degree, 1/2" BSPT male x 3/4" BSPP male O-ring	1
3	-	Gauge fitment no longer requires adaptor	-
4	-	Gauge fitment no longer requires adaptor	-
5	GA5078076	Gauge, Pressure, 250 bar, 3500psi	2
6	GA3500309	Hydraulic adaptor, Nipple, 1/2" BSPT male x 3/8" BSPP male	1
7	GA3500325	Hydraulic adaptor, Elbow, 90 degree, 3/4" BSPT male x 3/4" BSPP male O-ring	1
8	GA3500213	Hydraulic adaptor, Socket, 3/4" BSPT female x 3/4" BSPT female	1
9	GA3500272	Hydraulic adaptor, Tee, 3/4" BSPT male x 1/2" BSPT male x 3/4" BSPT male	1
10	GA3500200	Hydraulic adaptor, Tee, 1/2" BSPT male x 1/2" BSPT male x 1/2" BSPP female swivel	3
11	GA3500300	Hydraulic adaptor, Plug, 3/8" BSPP male	4
12	GA3500307	Hydraulic adaptor, Nipple, 1/4" BSPT male x 3/8" BSPP male	3
13	GA3500332	Hydraulic adaptor, Elbow, 90 degree, 1/4" BSPT male x 1/4" BSPP female swivel	2

Continued over page

Spool Block - Diff Lock, NORAC, Active

ITEM NO.	PART NUMBER	DESCRIPTION	QTY.
14	GA3500145	Hydraulic adaptor, Nipple, 3/8” BSPP male x 9/16” JIC male	4
15	GA3500144	Hydraulic adaptor, Tee, 9/16” JIC male x 9/16” JIC male x 9/16” JIC female swivel	6
16	GA5017373	Valve reducing modular	1
17	GA5047726	Valve solenoid J spool 12v 2 pin amp connector	1
18	GA3500306	Hydraulic adaptor, Nipple, 1/4” BSPT male x 1/4” BSPP male	1
19	GA5067050	SHCS M5 x 90 GR12.9 ZP	4
20	GA5047335	Plate blanking	1
21	GA5003581	SHCS M5 x 20 SS A2-70	4

Spool Block - Adj. Axle

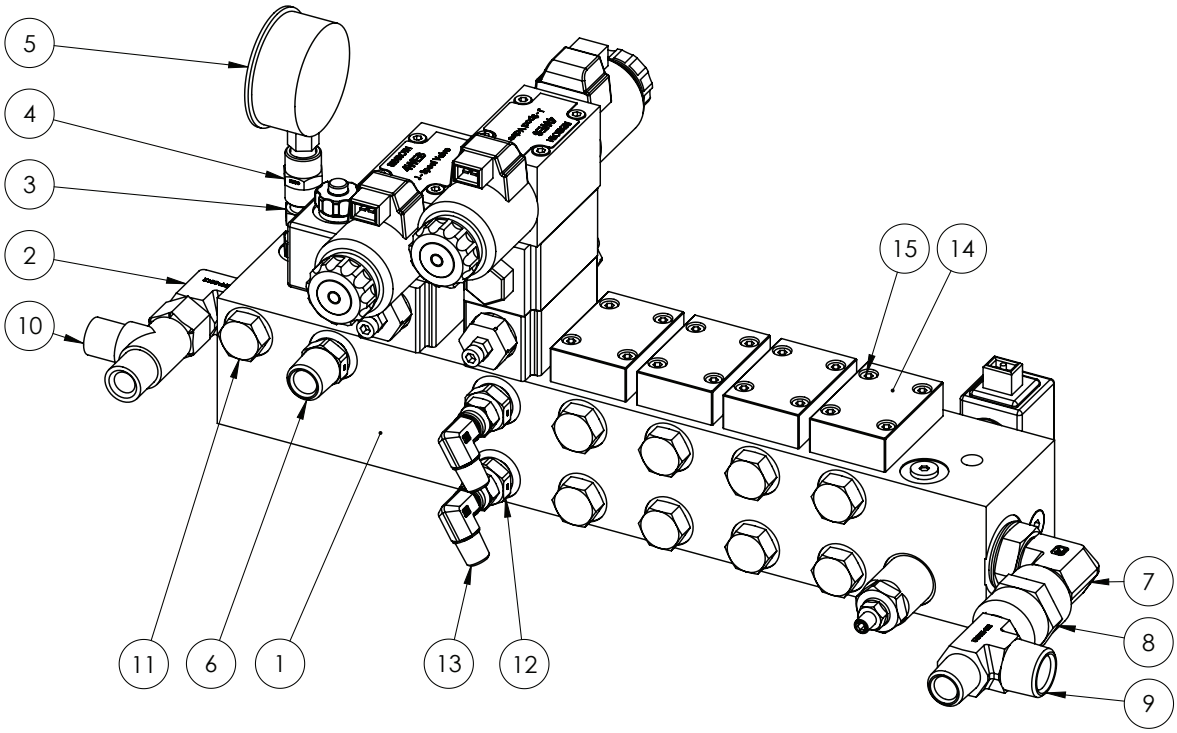

ITEM NO.	PART NUMBER	DESCRIPTION	QTY.
1	GA5047741	Manifold Assembly Option THREE Normally open Fitted with AMP plug coils	1
2	GA3500324	Hydraulic adaptor, Elbow, 90 degree, 1/2" BSPT male x 3/4" BSPP male O-ring	1
3	-	Gauge fitment no longer requires adaptor	-
4	-	Gauge fitment no longer requires adaptor	-
5	GA5078076	Gauge, Pressure, 250 bar, 3500psi	1
6	GA3500309	Hydraulic adaptor, Nipple, 1/2" BSPT male x 3/8" BSPP male	1
7	GA3500325	Hydraulic adaptor, Elbow, 90 degree, 3/4" BSPT male x 3/4" BSPP male O-ring	1
8	GA3500213	Hydraulic adaptor, Socket, 3/4" BSPT female x 3/4" BSPT female	1
9	GA3500272	Hydraulic adaptor, Tee, 3/4" BSPT male x 1/2" BSPT male x 3/4" BSPT male	1
10	GA3500200	Hydraulic adaptor, Tee, 1/2" BSPT male x 1/2" BSPT male x 1/2" BSPP female swivel	1
11	GA3500300	Hydraulic adaptor, Plug, 3/8" BSPP male	9
12	GA3500307	Hydraulic adaptor, Nipple, 1/4" BSPT male x 3/8" BSPP male	2
13	GA3500332	Hydraulic adaptor, Elbow, 90 degree, 1/4" BSPT male x 1/4" BSPP female swivel	2
14	GA5047335	Plate blanking	4
15	GA5003581	SHCS M5 x 20 SS A2-70	16

Spool Block - Adj. Axle, Tilt

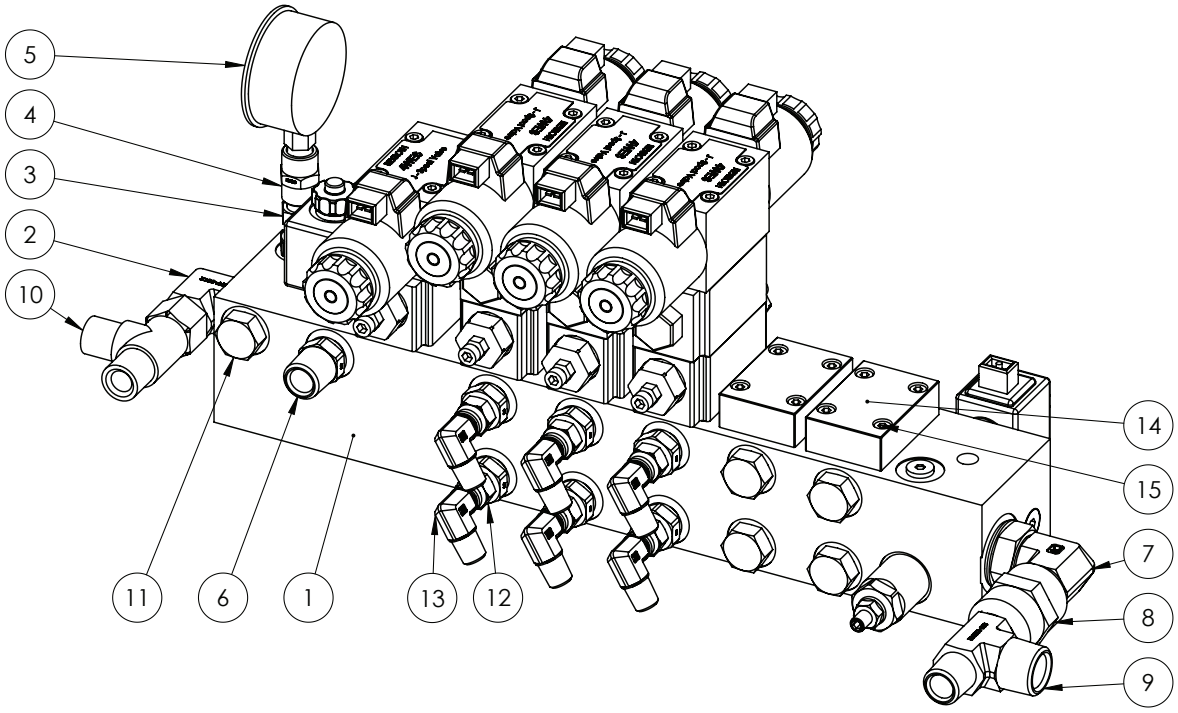

ITEM NO.	PART NUMBER	DESCRIPTION	QTY.
1	GA5047741	Manifold Assembly Option THREE Normally open Fitted with AMP plug coils	1
2	GA3500324	Hydraulic adaptor, Elbow, 90 degree, 1/2” BSPT male x 3/4” BSPP male O-ring	1
3	-	Gauge fitment no longer requires adaptor	-
4	-	Gauge fitment no longer requires adaptor	-
5	GA5078076	Gauge, Pressure, 250 bar, 3500psi	1
6	GA3500309	Hydraulic adaptor, Nipple, 1/2” BSPT male x 3/8” BSPP male	1
7	GA3500325	Hydraulic adaptor, Elbow, 90 degree, 3/4” BSPT male x 3/4” BSPP male O-ring	1
8	GA3500213	Hydraulic adaptor, Socket, 3/4” BSPT female x 3/4” BSPT female	1
9	GA3500272	Hydraulic adaptor, Tee, 3/4” BSPT male x 1/2” BSPT male x 3/4” BSPT male	1
10	GA3500200	Hydraulic adaptor, Tee, 1/2” BSPT male x 1/2” BSPT male x 1/2” BSPP female swivel	1
11	GA3500300	Hydraulic adaptor, Plug, 3/8” BSPP male	5
12	GA3500307	Hydraulic adaptor, Nipple, 1/4” BSPT male x 3/8” BSPP male	6
13	GA3500332	Hydraulic adaptor, Elbow, 90 degree, 1/4” BSPT male x 1/4” BSPP female swivel	6
14	GA5047335	Plate blanking	2
15	GA5003581	SHCS M5 x 20 SS A2-70	8

Spool Block - Adj. Axle, Bi-fold

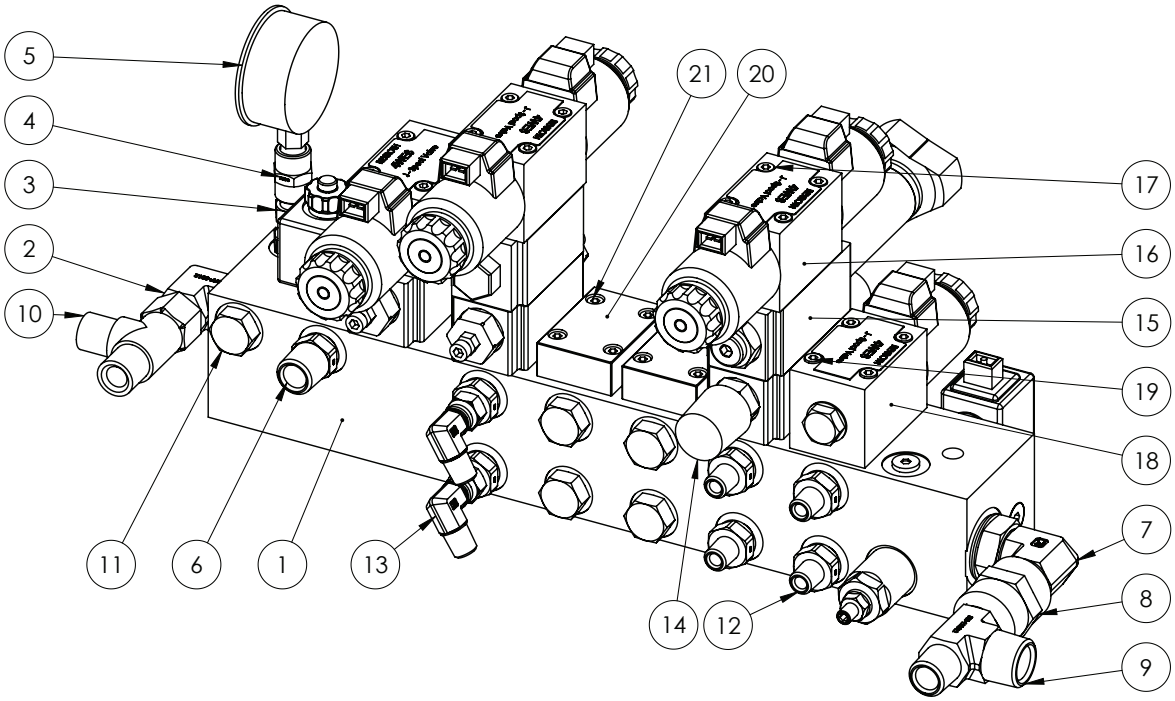

ITEM NO.	PART NUMBER	DESCRIPTION	QTY.
1	GA5047741	Manifold Assembly Option THREE Normally open Fitted with AMP plug coils	1
2	GA3500324	Hydraulic adaptor, Elbow, 90 degree, 1/2" BSPT male x 3/4" BSPP male O-ring	1
3	-	Gauge fitment no longer requires adaptor	-
4	-	Gauge fitment no longer requires adaptor	-
5	GA5078076	Gauge, Pressure, 250 bar, 3500psi	1
6	GA3500309	Hydraulic adaptor, Nipple, 1/2" BSPT male x 3/8" BSPP male	1
7	GA3500325	Hydraulic adaptor, Elbow, 90 degree, 3/4" BSPT male x 3/4" BSPP male O-ring	1
8	GA3500213	Hydraulic adaptor, Socket, 3/4" BSPT female x 3/4" BSPT female	1
9	GA3500272	Hydraulic adaptor, Tee, 3/4" BSPT male x 1/2" BSPT male x 3/4" BSPT male	1
10	GA3500200	Hydraulic adaptor, Tee, 1/2" BSPT male x 1/2" BSPT male x 1/2" BSPP female swivel	1
11	GA3500300	Hydraulic adaptor, Plug, 3/8" BSPP male	5
12	GA3500307	Hydraulic adaptor, Nipple, 1/4" BSPT male x 3/8" BSPP male	6
13	GA3500332	Hydraulic adaptor, Elbow, 90 degree, 1/4" BSPT male x 1/4" BSPP female swivel	2

Continued over page

Spool Block - Adj. Axle, Bi-fold

ITEM NO.	PART NUMBER	DESCRIPTION	QTY.
14	GA5047581	Hydraulic Valve, Flow control, NG6 A+B, Suit spool	1
15	GA5017373	Valve reducing modular	1
16	GA5047726	Valve solenoid J spool 12v 2 pin amp connector	1
17	GA5048570	SHCS M5 x 130 GR12.9 ZP	4
18	GA5047756	Valve, D spool hydraulic solenoid, centre level, 2 pin AMP	1
19	GA5054410	SHCS M5 x 50 GR12.9 ZP	4
20	GA5047335	Plate blanking	2
21	GA5003581	SHCS M5 x 20 SS A2-70	8

Spool Block - Adj. Axle, Bi-fold, Tilt

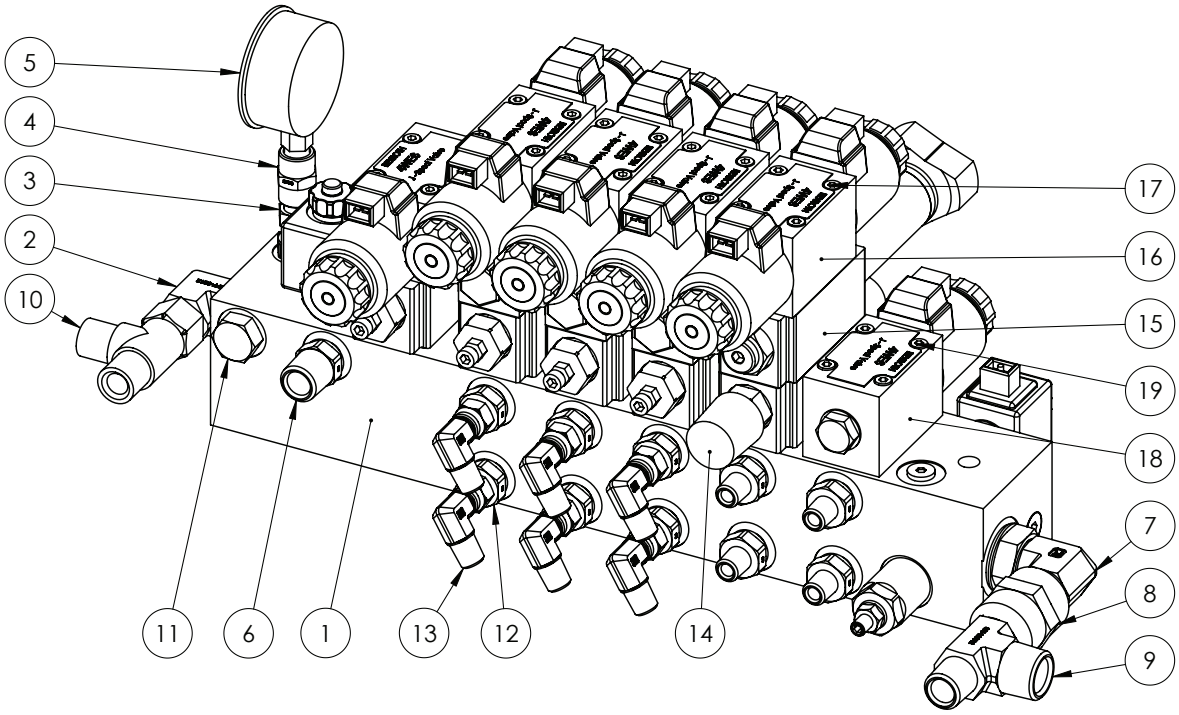

ITEM NO.	PART NUMBER	DESCRIPTION	QTY.
1	GA5047741	Manifold Assembly Option THREE Normally open Fitted with AMP plug coils	1
2	GA3500324	Hydraulic adaptor, Elbow, 90 degree, 1/2” BSPT male x 3/4” BSPP male O-ring	1
3	-	Gauge fitment no longer requires adaptor	-
4	-	Gauge fitment no longer requires adaptor	-
5	GA5078076	Gauge, Pressure, 250 bar, 3500psi	1
6	GA3500309	Hydraulic adaptor, Nipple, 1/2” BSPT male x 3/8” BSPP male	1
7	GA3500325	Hydraulic adaptor, Elbow, 90 degree, 3/4” BSPT male x 3/4” BSPP male O-ring	1
8	GA3500213	Hydraulic adaptor, Socket, 3/4” BSPT female x 3/4” BSPT female	1
9	GA3500272	Hydraulic adaptor, Tee, 3/4” BSPT male x 1/2” BSPT male x 3/4” BSPT male	1
10	GA3500200	Hydraulic adaptor, Tee, 1/2” BSPT male x 1/2” BSPT male x 1/2” BSPP female swivel	1
11	GA3500300	Hydraulic adaptor, Plug, 3/8” BSPP male	1
12	GA3500307	Hydraulic adaptor, Nipple, 1/4” BSPT male x 3/8” BSPP male	10
13	GA3500332	Hydraulic adaptor, Elbow, 90 degree, 1/4” BSPT male x 1/4” BSPP female swivel	6

Continued over page

Spool Block - Adj. Axle, Bi-fold, Tilt

ITEM NO.	PART NUMBER	DESCRIPTION	QTY.
14	GA5047581	Hydraulic Valve, Flow control, NG6 A+B, Suit spool	1
15	GA5017373	Valve reducing modular	1
16	GA5047726	Valve solenoid J spool 12v 2 pin amp connector	1
17	GA5048570	SHCS M5 x 130 GR12.9 ZP	4
18	GA5047756	Valve, D spool hydraulic solenoid, centre level, 2 pin AMP	1
19	GA5054410	SHCS M5 x 50 GR12.9 ZP	4

Spool Block - Adj. Axle, Bi-fold, NORAC Passive

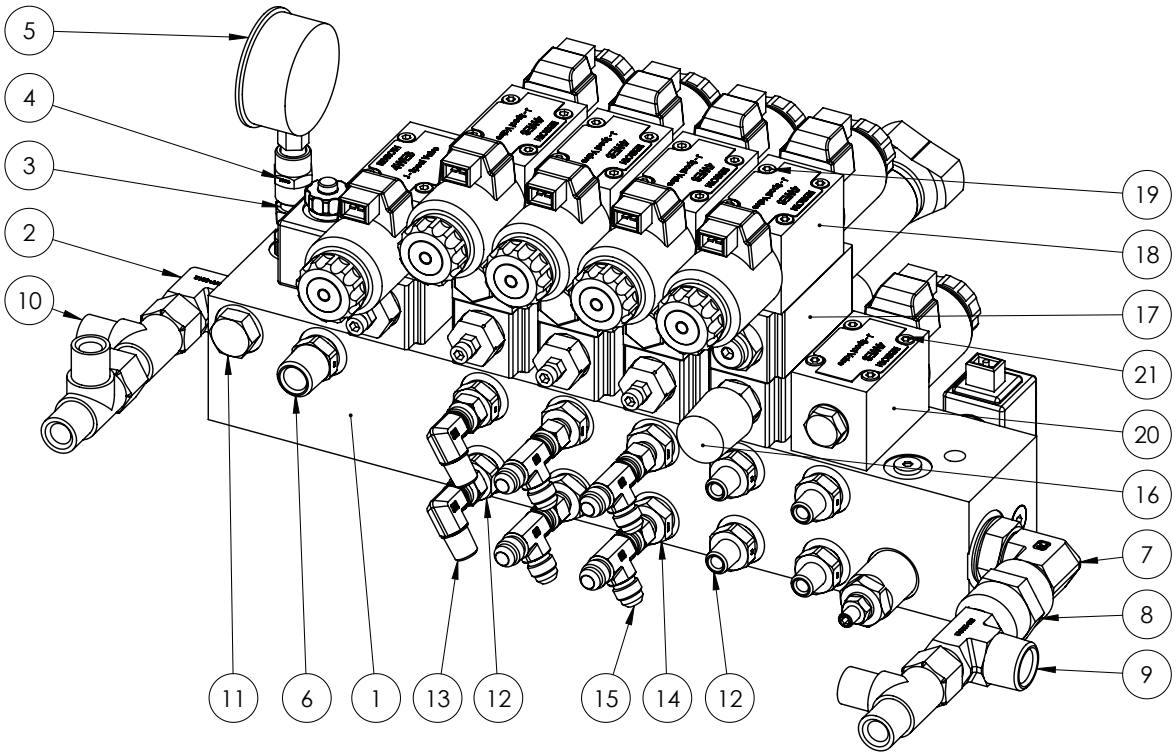

ITEM NO.	PART NUMBER	DESCRIPTION	QTY.
1	GA5047741	Manifold Assembly Option THREE Normally open Fitted with AMP plug coils	1
2	GA3500324	Hydraulic adaptor, Elbow, 90 degree, 1/2” BSPT male x 3/4” BSPP male O-ring	1
3	-	Gauge fitment no longer requires adaptor	-
4	-	Gauge fitment no longer requires adaptor	-
5	GA5078076	Gauge, Pressure, 250 bar, 3500psi	1
6	GA3500309	Hydraulic adaptor, Nipple, 1/2” BSPT male x 3/8” BSPP male	1
7	GA3500325	Hydraulic adaptor, Elbow, 90 degree, 3/4” BSPT male x 3/4” BSPP male O-ring	1
8	GA3500213	Hydraulic adaptor, Socket, 3/4” BSPT female x 3/4” BSPT female	1
9	GA3500272	Hydraulic adaptor, Tee, 3/4” BSPT male x 1/2” BSPT male x 3/4” BSPT male	1
10	GA3500200	Hydraulic adaptor, Tee, 1/2” BSPT male x 1/2” BSPT male x 1/2” BSPP female swivel	3
11	GA3500300	Hydraulic adaptor, Plug, 3/8” BSPP male	1
12	GA3500307	Hydraulic adaptor, Nipple, 1/4” BSPT male x 3/8” BSPP male	6
13	GA3500332	Hydraulic adaptor, Elbow, 90 degree, 1/4” BSPT male x 1/4” BSPP female swivel	2

Continued over page

Spool Block - Adj. Axle, Bi-fold, NORAC Passive

ITEM NO.	PART NUMBER	DESCRIPTION	QTY.
14	GA3500145	Hydraulic adaptor, Nipple, 3/8” BSPP male x 9/16” JIC male	4
15	GA3500144	Hydraulic adaptor, Tee, 9/16” JIC male x 9/16” JIC male x 9/16” JIC female swivel	4
16	GA5047581	Hydraulic Valve, Flow control, NG6 A+B, Suit spool	1
17	GA5017373	Valve reducing modular	1
18	GA5047726	Valve solenoid J spool 12v 2 pin amp connector	1
19	GA5048570	SHCS M5 x 130 GR12.9 ZP	4
20	GA5047756	Valve, D spool hydraulic solenoid, centre level, 2 pin AMP	1
21	GA5054410	SHCS M5 x 50 GR12.9 ZP	4

Spool Block - Adj. Axle, Bi-fold, NORAC Active

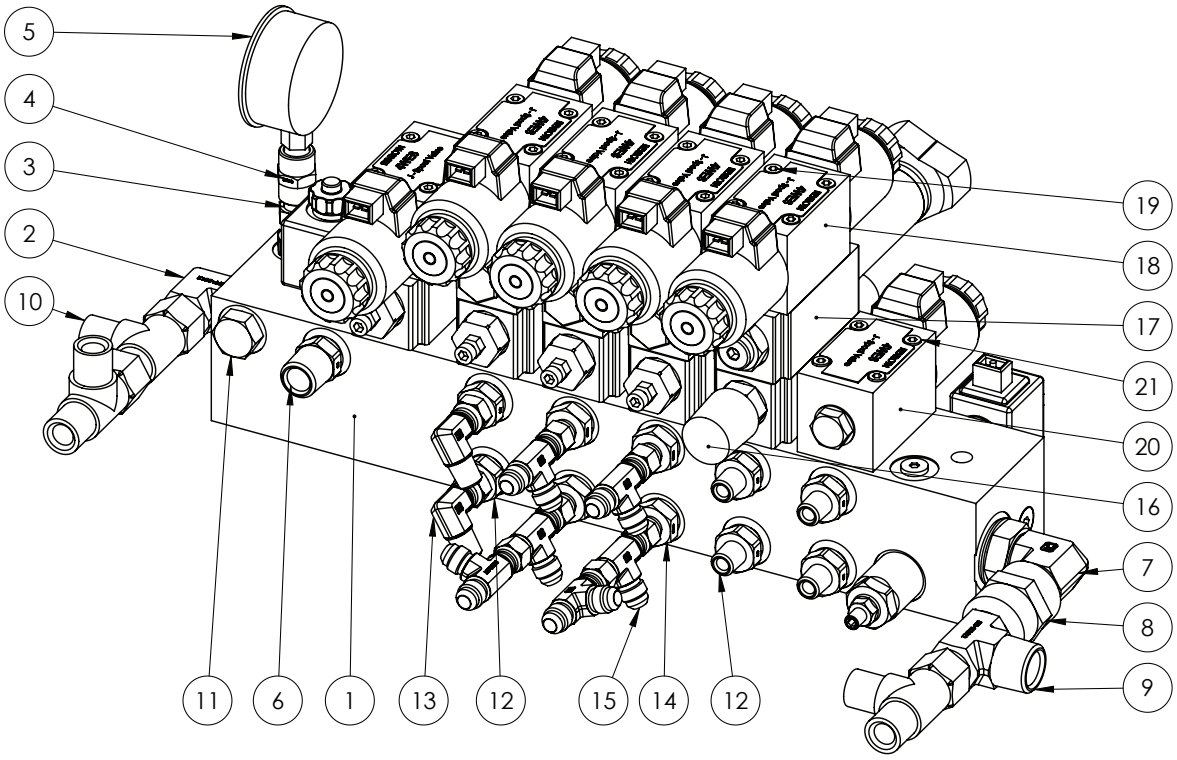

ITEM NO.	PART NUMBER	DESCRIPTION	QTY.
1	GA5047741	Manifold Assembly Option THREE Normally open Fitted with AMP plug coils	1
2	GA3500324	Hydraulic adaptor, Elbow, 90 degree, 1/2” BSPT male x 3/4” BSPP male O-ring	1
3	-	Gauge fitment no longer requires adaptor	-
4	-	Gauge fitment no longer requires adaptor	-
5	GA5078076	Gauge, Pressure, 250 bar, 3500psi	1
6	GA3500309	Hydraulic adaptor, Nipple, 1/2” BSPT male x 3/8” BSPP male	1
7	GA3500325	Hydraulic adaptor, Elbow, 90 degree, 3/4” BSPT male x 3/4” BSPP male O-ring	1
8	GA3500213	Hydraulic adaptor, Socket, 3/4” BSPT female x 3/4” BSPT female	1
9	GA3500272	Hydraulic adaptor, Tee, 3/4” BSPT male x 1/2” BSPT male x 3/4” BSPT male	1
10	GA3500200	Hydraulic adaptor, Tee, 1/2” BSPT male x 1/2” BSPT male x 1/2” BSPP female swivel	3
11	GA3500300	Hydraulic adaptor, Plug, 3/8” BSPP male	1
12	GA3500307	Hydraulic adaptor, Nipple, 1/4” BSPT male x 3/8” BSPP male	6
13	GA3500332	Hydraulic adaptor, Elbow, 90 degree, 1/4” BSPT male x 1/4” BSPP female swivel	2

Continued over page

Spool Block - Adj. Axle, Bi-fold, NORAC Active

ITEM NO.	PART NUMBER	DESCRIPTION	QTY.
14	GA3500145	Hydraulic adaptor, Nipple, 3/8” BSPP male x 9/16” JIC male	4
15	GA3500144	Hydraulic adaptor, Tee, 9/16” JIC male x 9/16” JIC male x 9/16” JIC female swivel	6
16	GA5047581	Hydraulic Valve, Flow control, NG6 A+B, Suit spool	2
17	GA5017373	Valve reducing modular	8
18	GA5047726	Valve solenoid J spool 12v 2 pin amp connector	1
19	GA5048570	SHCS M5 x 130 GR12.9 ZP	4
20	GA5047756	Valve, D spool hydraulic solenoid, centre level, 2 pin AMP	1
21	GA5054410	SHCS M5 x 50 GR12.9 ZP	4

Spool Block - Adj. Axle, NORAC Passive

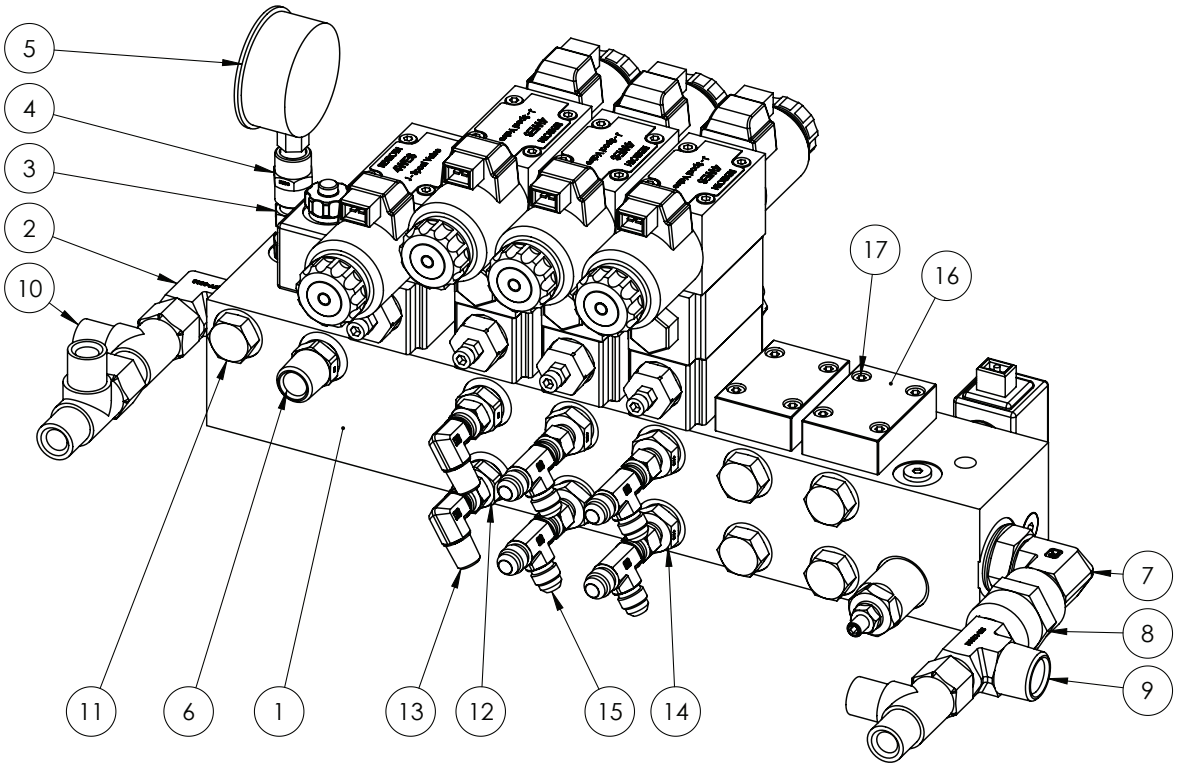

ITEM NO.	PART NUMBER	DESCRIPTION	QTY.
1	GA5047741	Manifold Assembly Option THREE Normally open Fitted with AMP plug coils	1
2	GA3500324	Hydraulic adaptor, Elbow, 90 degree, 1/2” BSPT male x 3/4” BSPP male O-ring	1
3	-	Gauge fitment no longer requires adaptor	-
4	-	Gauge fitment no longer requires adaptor	-
5	GA5078076	Gauge, Pressure, 250 bar, 3500psi	1
6	GA3500309	Hydraulic adaptor, Nipple, 1/2” BSPT male x 3/8” BSPP male	1
7	GA3500325	Hydraulic adaptor, Elbow, 90 degree, 3/4” BSPT male x 3/4” BSPP male O-ring	1
8	GA3500213	Hydraulic adaptor, Socket, 3/4” BSPT female x 3/4” BSPT female	1
9	GA3500272	Hydraulic adaptor, Tee, 3/4” BSPT male x 1/2” BSPT male x 3/4” BSPT male	1
10	GA3500200	Hydraulic adaptor, Tee, 1/2” BSPT male x 1/2” BSPT male x 1/2” BSPP female swivel	3
11	GA3500300	Hydraulic adaptor, Plug, 3/8” BSPP male	5
12	GA3500307	Hydraulic adaptor, Nipple, 1/4” BSPT male x 3/8” BSPP male	2
13	GA3500332	Hydraulic adaptor, Elbow, 90 degree, 1/4” BSPT male x 1/4” BSPP female swivel	2
14	GA3500145	Hydraulic adaptor, Nipple, 3/8” BSPP male x 9/16” JIC male	4
15	GA3500144	Hydraulic adaptor, Tee, 9/16” JIC male x 9/16” JIC male x 9/16” JIC female swivel	4
16	GA5047335	Plate blanking	2
17	GA5003581	SHCS M5 x 20 SS A2-70	8

Spool Block - Adj. Axle, NORAC Active

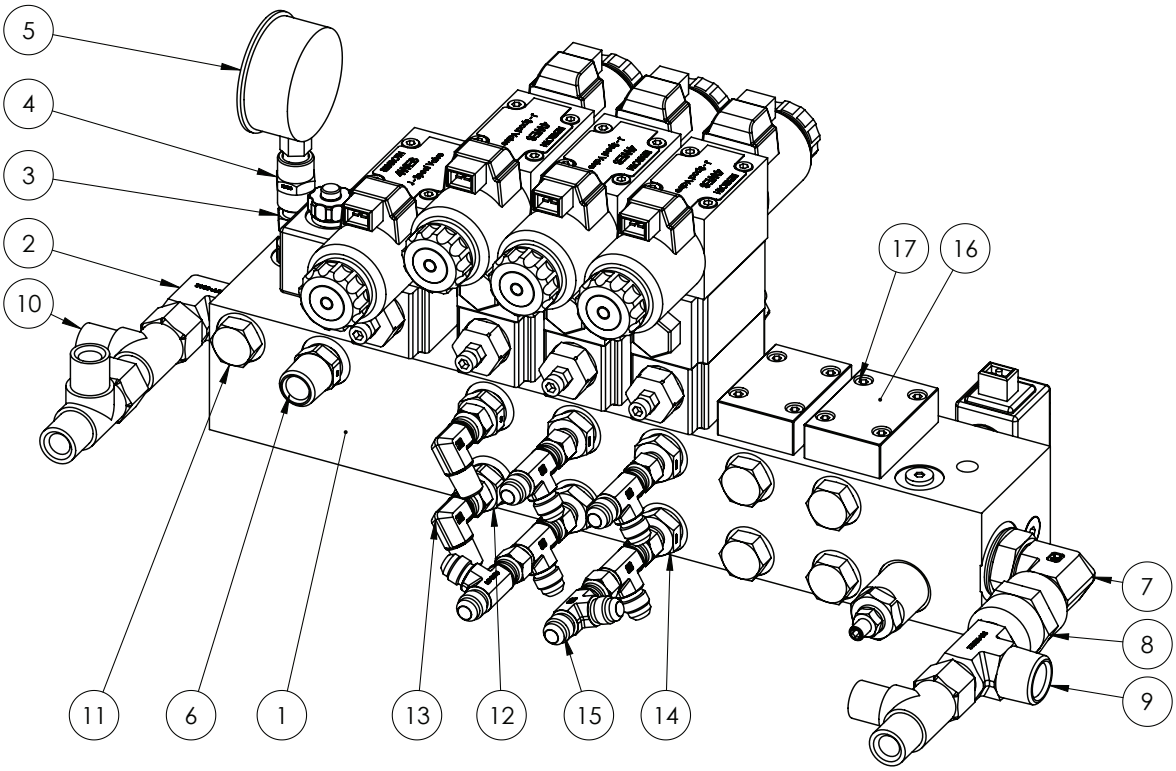

ITEM NO.	PART NUMBER	DESCRIPTION	QTY.
1	GA5047741	Manifold Assembly Option THREE Normally open Fitted with AMP plug coils	1
2	GA3500324	Hydraulic adaptor, Elbow, 90 degree, 1/2” BSPT male x 3/4” BSPP male O-ring	1
3	-	Gauge fitment no longer requires adaptor	-
4	-	Gauge fitment no longer requires adaptor	-
5	GA5078076	Gauge, Pressure, 250 bar, 3500psi	1
6	GA3500309	Hydraulic adaptor, Nipple, 1/2” BSPT male x 3/8” BSPP male	1
7	GA3500325	Hydraulic adaptor, Elbow, 90 degree, 3/4” BSPT male x 3/4” BSPP male O-ring	1
8	GA3500213	Hydraulic adaptor, Socket, 3/4” BSPT female x 3/4” BSPT female	1
9	GA3500272	Hydraulic adaptor, Tee, 3/4” BSPT male x 1/2” BSPT male x 3/4” BSPT male	1
10	GA3500200	Hydraulic adaptor, Tee, 1/2” BSPT male x 1/2” BSPT male x 1/2” BSPP female swivel	3
11	GA3500300	Hydraulic adaptor, Plug, 3/8” BSPP male	5
12	GA3500307	Hydraulic adaptor, Nipple, 1/4” BSPT male x 3/8” BSPP male	2
13	GA3500332	Hydraulic adaptor, Elbow, 90 degree, 1/4” BSPT male x 1/4” BSPP female swivel	2
14	GA3500145	Hydraulic adaptor, Nipple, 3/8” BSPP male x 9/16” JIC male	4
15	GA3500144	Hydraulic adaptor, Tee, 9/16” JIC male x 9/16” JIC male x 9/16” JIC female swivel	6
16	GA5047335	Plate blanking	2
17	GA5003581	SHCS M5 x 20 SS A2-70	8

Spool Block - Mounting Assembly

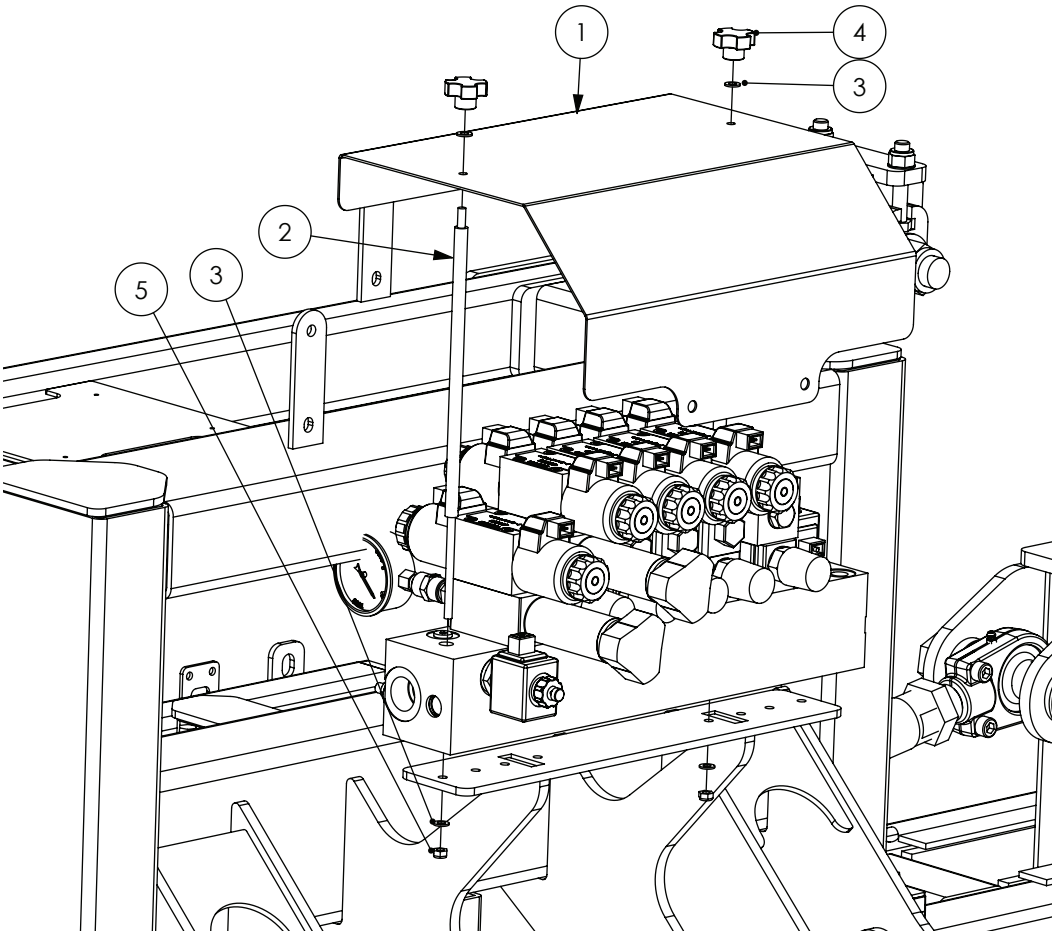

ITEM NO.	PART NUMBER	DESCRIPTION	QTY.
1	COMP0013	Solenoid cover	1
2	MACH0035	Retaining bolt for solenoid cover	2
3	GA5004437	Washer 6mm Flat SS	4
4	GA5069870	Knob, Star grip M6 x 32 DIA	2
5	GA5048115	Nut M6 nyloc	2

PLUMBING

Dual Pressure Filter Assembly

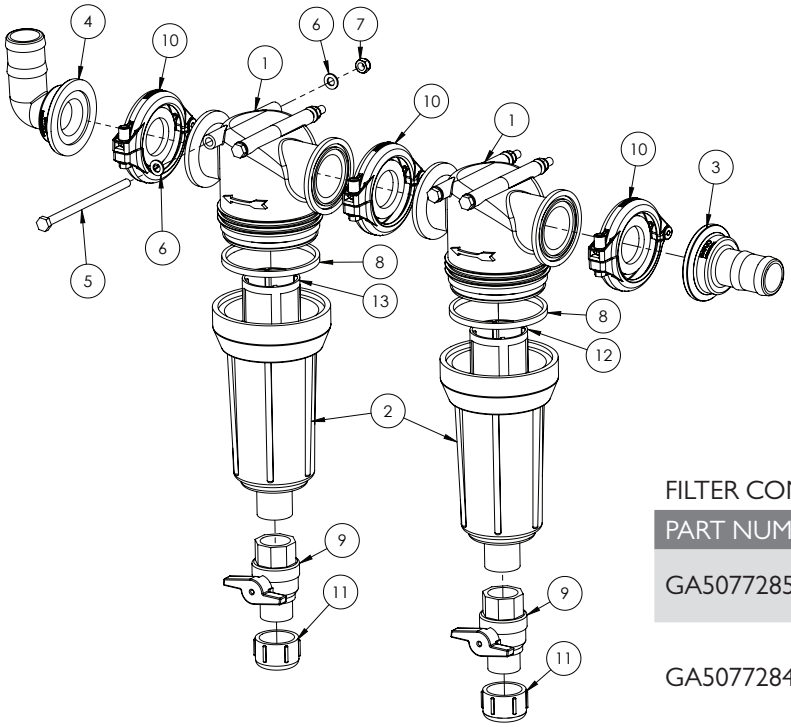

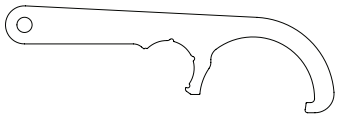

Pressure Filter Tool
GA4522610

FILTER MESH ALTERNATES

PART NUMBER	DESCRIPTION
GA5077391	16 mesh
GA5077392	32 mesh
GA5077393	50 mesh
GA5077394	80 mesh
GA5077395	100 mesh
GA5077396	120 mesh

FILTER COMPLETE

PART NUMBER	DESCRIPTION
GA5077285	Filter, 75 series flange inlet & outlet, with 80 mesh, Blue
GA5077284	Filter, 75 series flange inlet & outlet, with 100 mesh, Green

ITEM NO.	PART NUMBER	DESCRIPTION	QTY.
1	GA5078386	Strainer head, 1 1/2" inlet / outlets	2
2	GA5077539	Filter bowl	2
3	GA5077833	Hose barb, Flange, Straight, 2" flange x 1 1/2" hose	1
4	GA5077834	Hose barb, Elbow, 90 degree, 2" flange x 1 1/2" hose	1
5	GA5011503	Bolt M8 x 140 ZP GR8.8	4
6	GA5003643	Washer 8mm Flat SS HD	8
7	GA5004917	Nut M8 Nyloc ZP	4
8	GA5077541	Seal, 98 OD x 91 ID x 7mm thick, EPDM type - Alternate	2
	GA5077542	Seal, 98 OD x 91 ID x 7mm thick, VITON type - Alternate	
9	GA5067620	Ball Valve, 1” Male / Female, Tee Handle, Brass	2
10	GA2000114	Flange Clamp, and Gasket, 1.5”, series 200, Hypro	3
11	GA5077540	Filter bowl cap, AA126, Polypropylene	2
	GA5077564	Seal, suit GA5077540, EPDM type - Alternate	2
	GA5077565	Seal, suit GA5077540, VITON type - Alternate	
12	GA5077394	Filter screen, 80 mesh, Blue, SS & polypropylene	1
13	GA5077395	Filter screen, 100 mesh, Green, SS & polymer	1

Suction Filter Assembly

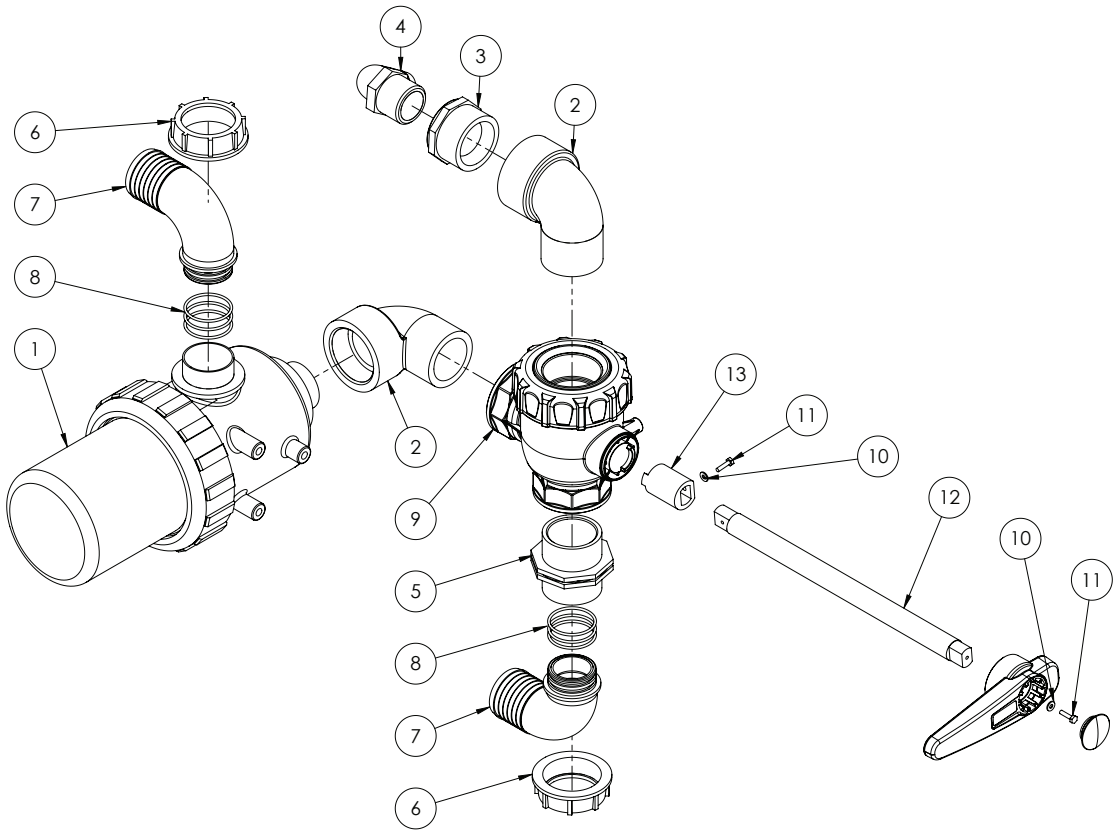

ITEM NO.	PART NUMBER	DESCRIPTION	QTY.
1	GA5076799*	Suction filter - 2"	1
2	GA5078142	Street Elbow 2"	2
3	GA5078022	Poly Pipe Reducer Bush 2” x 1 1/4”	1
4	GA5077730	90 Degree Poly Hose Barb Elbow 1 1/4”	1
5	GA5078410	Nipple 2" Symmetric (with leading edge for o-ring)	1
6	GA5076605	Fly Nut 2"	2
7	GA5076262	Elbow D.52 for FlyNut 2	2
8	GA5048385	O-ring, 42.5mm x 2.62mm, BS131	6
9	GA5076987	Valve, Ball, 3 way, 2” female thread inlet & outlet	1
10	GA5020510	Washer 4mm Flat HD SS	2
11	GA5051040	Bolt M4 x 16 SS A2-70	2
12	GA4552250	Handle Extension Bar	1
13	GA4552255	Handle Extension Bar Adaptor	1

* Sub-assembly on following pages

Suction Filter - 2"

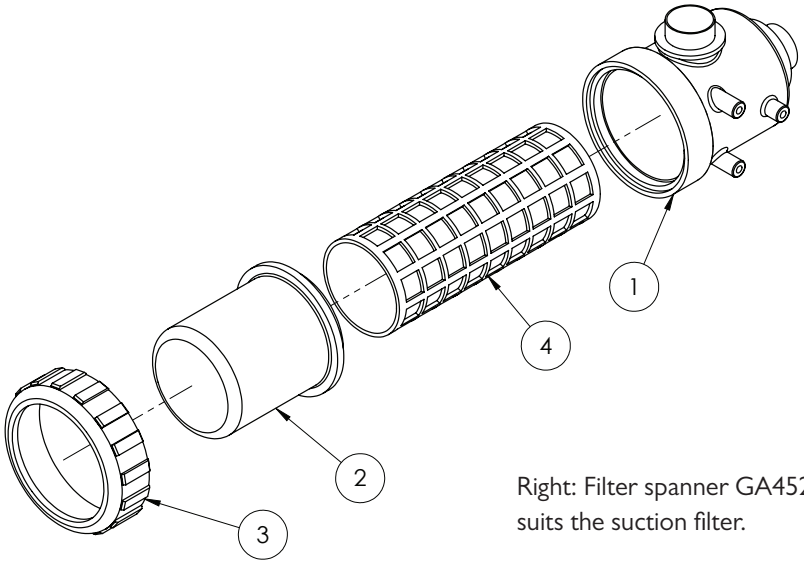

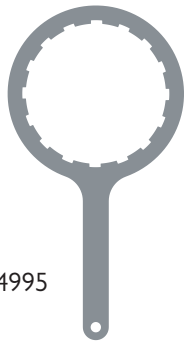

Right: Filter spanner GA4524995 suits the suction filter.

ITEM NO.	PART NUMBER	DESCRIPTION	QTY.
-	GA5076799	Suction filter, 317, 2" BSP male inlet / outlet, 32 mesh - Complete	-
1	GA5076773	Filter Body, 317, "2", Inlet Outlet thread	1
2	GA5076793	317 Suction Filter Bowl	1
	GA5076769	O Ring 126.4 x 7 mm, suit 317 filter bowl, BS429 - Alternate	1
	GA5076770	O Ring 126.4 x 7 mm, suit 317 filter bowl, Viton - Alternate	1
3	GA5076768	Nut, Plastic, Suit 317 suction filter, 8 Threads	1
4	GA5076797	32 Mesh Screen - Red - Standard fitment	1
	GA5076795	50 Mesh Screen - Blue - Alternate	
	GA5076798	80 mesh Screen - Yellow - Alternate	
	GA5077684	O ring, 2.62 x 94.92 mm, EPDM, G11046, suits filter screen	2

Elbow - Main Product Line

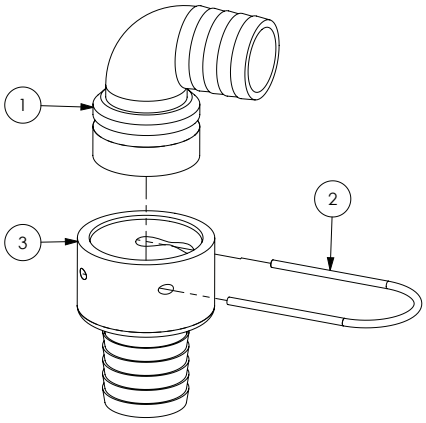

ITEM NO.	PART NUMBER	DESCRIPTION	QTY.
1	GA5065620	Plug in hose tail AS40/33/90 degree	1
2	GA5065690	Retaining pin, Suit AS40 plumbing fittings, Altek	1
3	GA5065655	Hose barb, Straight, AS40 female x 33mm hose	1

Flow Control Valve - Raven controller

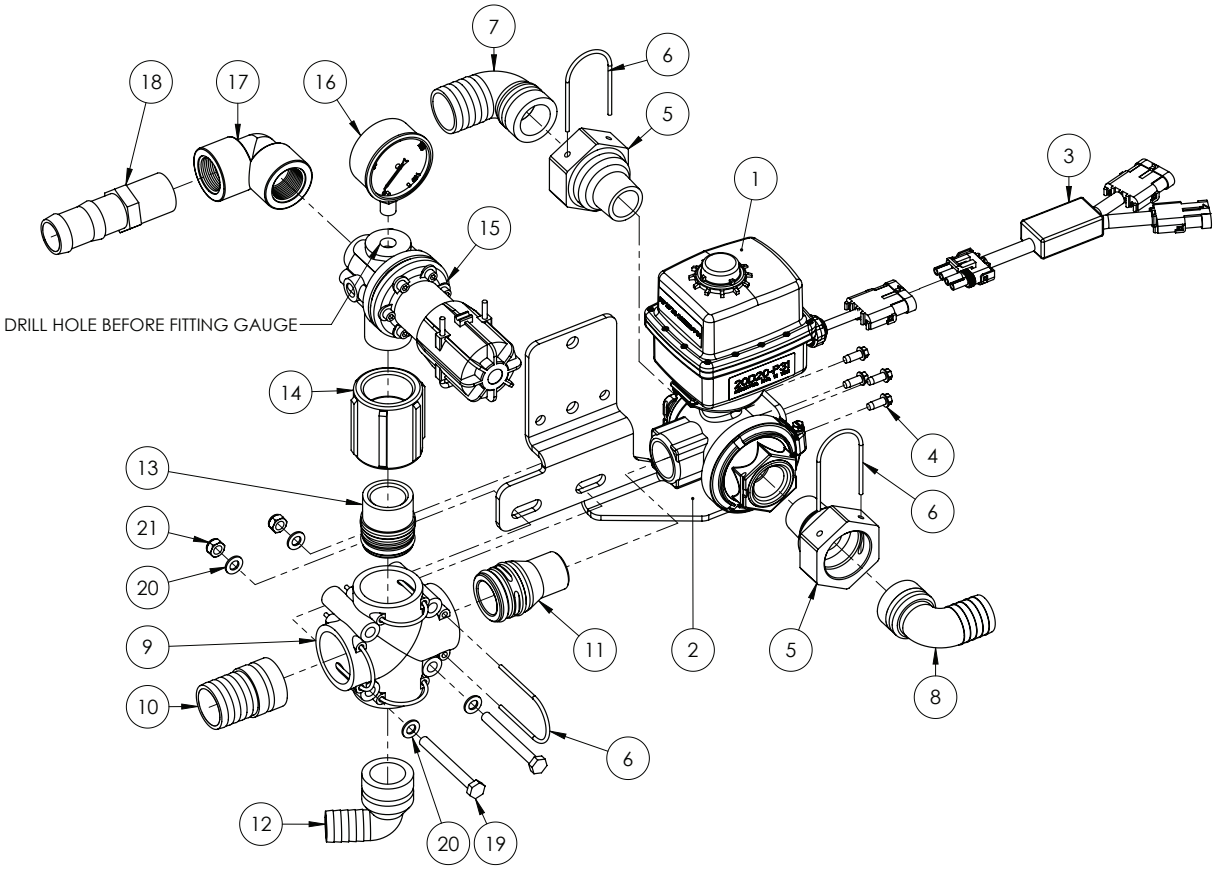

ITEM NO.	PART NUMBER	DESCRIPTION	QTY.
-	GA5065815	O ring, 35 x 4 mm, Suit AS40 fittings	-
-	GA5065820	O ring, 38 x 3 mm, Suits AS40 plumbing fittings	-
1	GA2000065	Regulator valve, 1” NPT, full port, 3 way, 0.8 sec 12v, KZ valve	1
	GA2000067	Regulator valve, valve only, suit GA2000065, KZ valve	-
	GA2000066	Regulator valve, Actuator only, 0.8 sec 12v, suit GA2000065, KZ valve	-
2	GA4509460	Plate, Regulator Valve Assembly Mount	1
3	GA5060059	Loom Boom Recirc Bypass Module	1
4	GA0500022	Set Screw Self Tapping Trilobe M6 x 16 ZP	4
5	GA4582385	Coupling, AS40 female x 1” NPT male thread	2
6	GA5065690	Safety pin, Suit AS40 plumbing fittings, Altek	6
7	GA5065625	Hose barb, Elbow, 90 degree, AS40 male x 39mm barb, Altek	1
8	GA5065620	Hose barb, Elbow, 90 degree, AS40 x 33mm hose barb, Altek	1
9	GA5065565	Plumbing coupling, Cross, AS40 female inlets / outlets, Altek	1
10	GA5065590	Hose barb, Straight, AS40 x 39mm hose, Altek	1
11	GA2000077	Plumbing Fitting, AS40 to 1” NPT Male Thread, Altek	1
12	GA5065615	Hose barb, Elbow 90 degree, AS40 x 25mm, Altek	1
13	GA5065595	Plumbing adaptor, AS40 1-1/4" male thread	1

Continued over page

Flow Control Valve - Raven controller

ITEM NO.	PART NUMBER	DESCRIPTION	QTY.
14	GA5077639	Coupling, socket, 1 1/4" female thread	1
15	GA5075640	Valve, Pressure relief, 15 bar, 1” male thread inlet x 1 1/4” male thread outlet, Polmac	1
16	GA4948470	Gauge, Pressure, Small face, 160psi	1
17	GA5077655	Street elbow, 90 degree, 1" female thread x 1" female thread	1
18	GA5077722	Hose barb, Straight, 1 male thread x 1 1/4" hose	1
19	GA5052600	Bolt M8 x 75 SS A2-70	2
20	GA5003643	Washer 8mm Flat SS HD	4
21	GA5052590	Nut M8 Nyloc SS	2

Flow Meter

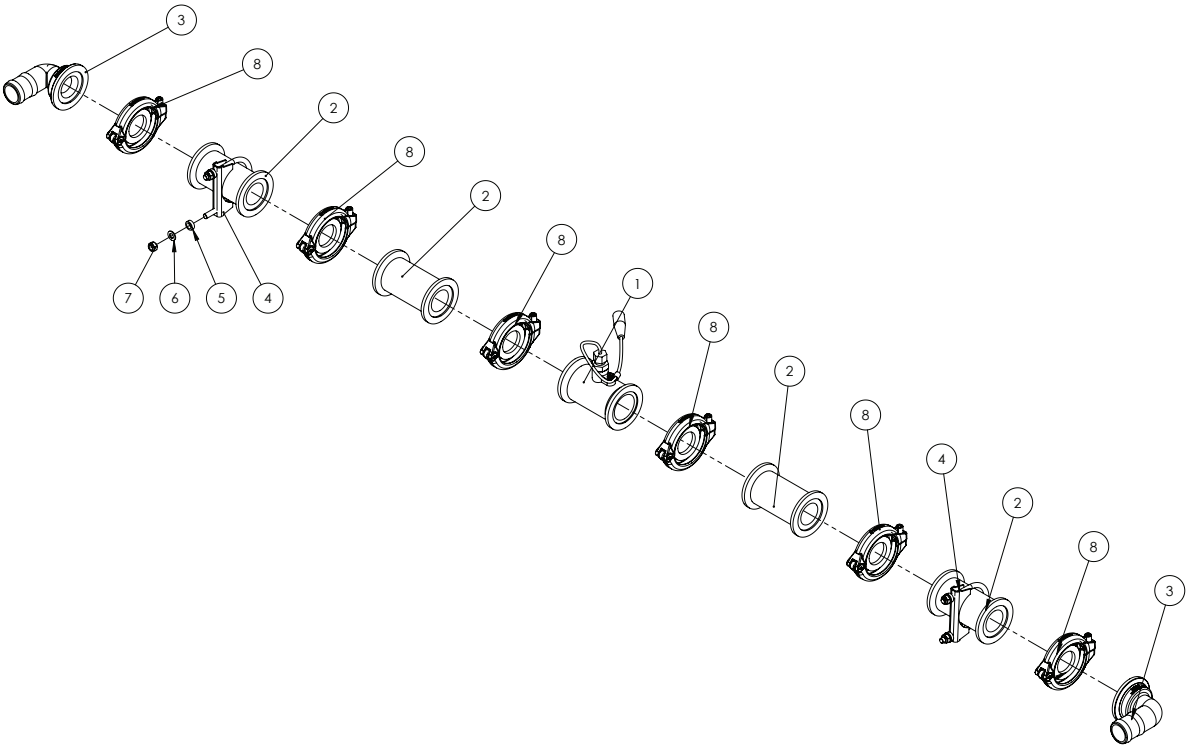

FLOW METER ASSEMBLY

PART NUMBER	DESCRIPTION
GA4908545	Flow Meter Assembly, long, Raven 60P High Pulse with round connector, 1 1/2” Hose Barbs, suit 4400 and PC1 ISO Bus
GA4949215	Flow Meter Assembly, long, Raven 60P High Pulse with Deutsch connector, 1 1/2” Hose Barbs, suit RCM ISO Bus

ITEM NO.	PART NUMBER	DESCRIPTION	QTY.
1	GA5075873	Flowmeter, RFM60P, Round connector, suit ISO & 4400 Raven	1
	GA5075890	Flowmeter, RFM60P, Deutsch connector, suit RCM Raven	1
2	GA5077840	Plumbing coupling, Straight, 2" flange x " flange x 4 1/2" long	4
3	GA5077834	Hose barb, Elbow, 90 degree, 2 flange x 1 1/2" hose	2
4	GA5006689	Exhaust clamp - 66mm C12	2
5	GA4552080	Crush tube, 10.2 ID x 15 OD x 5 mm	4
6	GA5003643	Washer 8mm Flat SS HD	4
7	GA5052590	Nut M8 Nyloc SS	4
8	GA2000114	Flange Clamp, and Gasket, 1.5”, series 200, Hypro	6

* Sub-assembly on following pages

NOTE: The flange clamps come with a built in seal/gasket.

Flow Meter Assembly

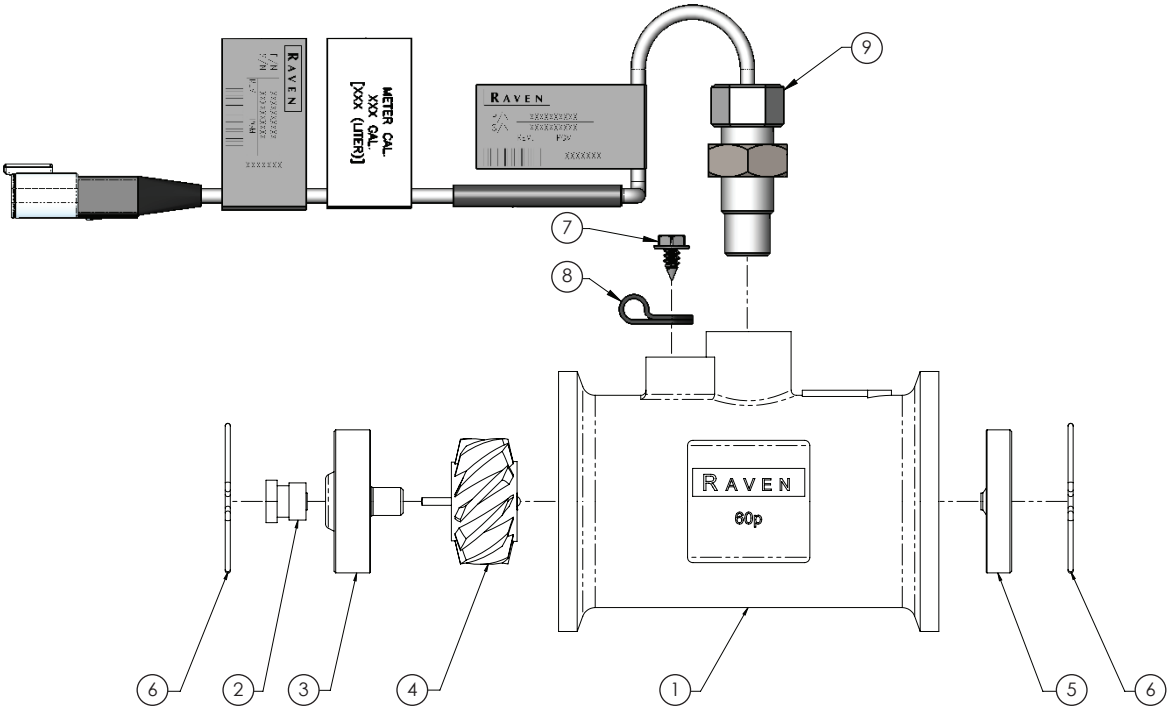

ITEM NO.	PART NUMBER	DESCRIPTION	QTY.
-	GA5075873	Flowmeter, RFM60P, Round connector, suit ISO & 4400 Raven	1
	GA5075890	Flowmeter, RFM60P, Deutsch connector, suit RCM Raven	1
1	-	Body, Moulded, Flowmeter RFM-60, 1060159514	1
2	0630173062F	Turbine, Stud, Poly, Flowmeter RFM-60	2
3	GA5075870	Hub/Bearing Assembly, Upstream, Flowmeter RFM-60	1
4	GA5075869	Rotor/Magnet Assembly RFM-60	1
5	GA5075871	Bearing, Down Stream End Bearing suit RFM-60	1
6	-	Retaining ring, Wireform, Flowmeter RFM-60, 3350003200	2
7	GA5076734	Screw 10-16 x 3/8" Sltd Hex	1
8	GA5076966	Clamp Cable Plastic 1/4" x 1/2"	1
9	GA3000195	Sensor, External Flow Meter, High Pulse, suit 15P and 60P, Raven	1

RapidFire - RapidFlow Return Valve

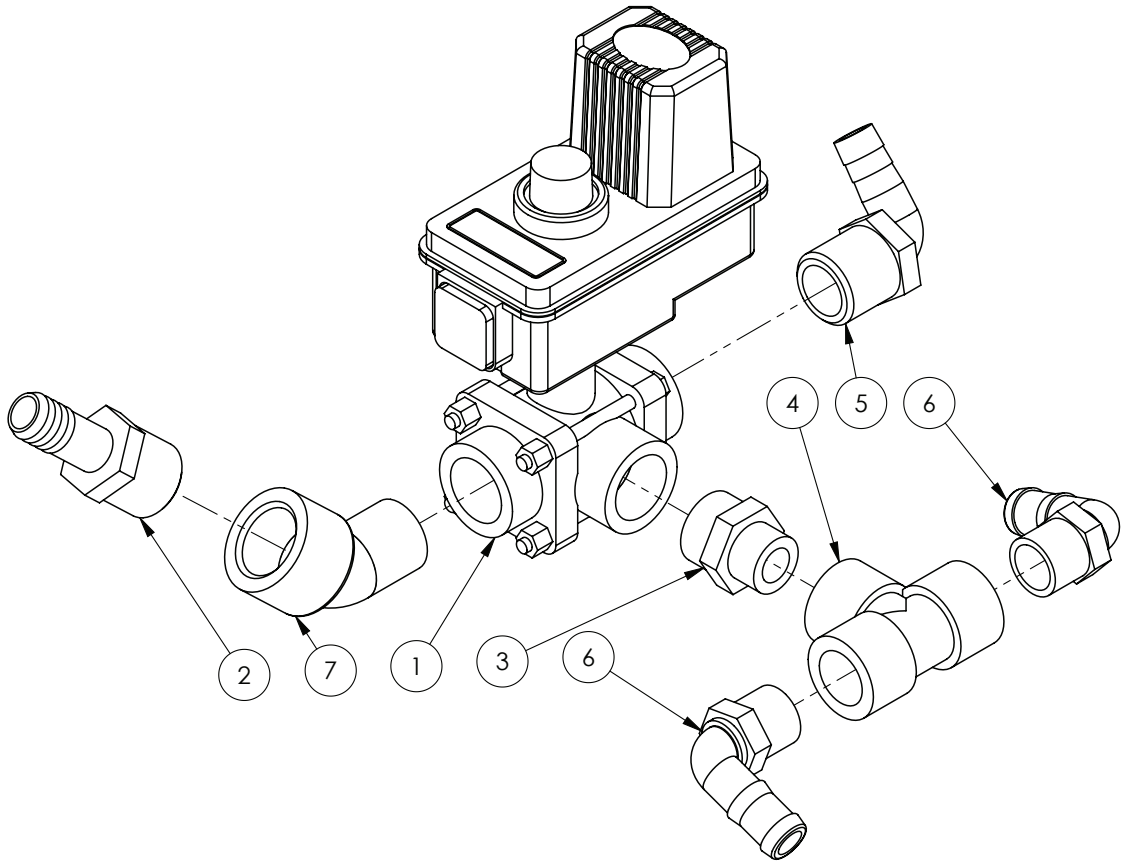

ITEM NO.	PART NUMBER	DESCRIPTION	QTY.
1	GA5077319	Valve, Electric ball 3 way, Shutoff/Bypass, 1” - Complete unit	1
	GA5077047	Replacement 12v motor, suit Teejet valve GA5077319, bare wires	-
2	GA5077721	Hose barb, Straight, 1” male thread x 3/4” hose	1
3	GA5078089	Reducing Nipple, 1” thread x 3/4” thread	1
4	GA5078150	Tee, Threaded, 3/4” female	1
5	GA5077719	Hose barb, Elbow, 90 degree, 1” male thread x 3/4” hose	1
6	GA5077717	Hose barb, Elbow, 90 degree, 3/4” male thread x 3/4” hose	2
7	GA5078136	Street elbow, 45 degree, 1” male thread x 1” female thread	1

RapidFire - Pressure Flow Distributor - 4400

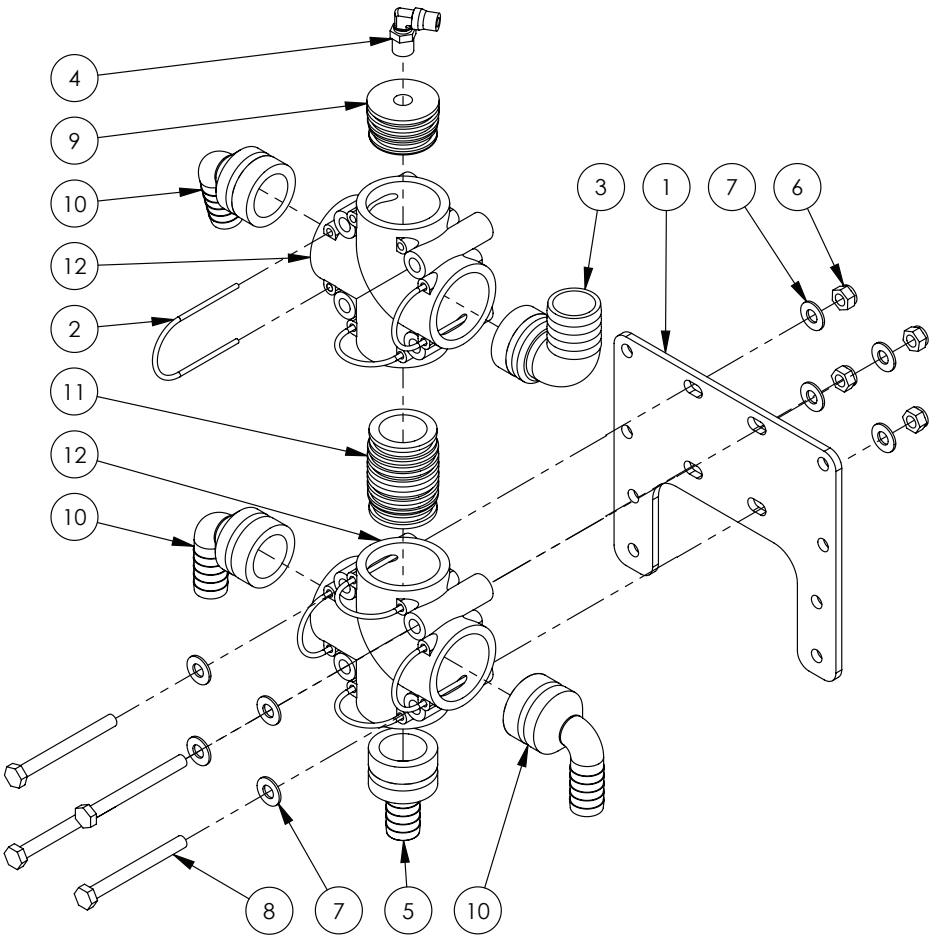

ITEM NO.	PART NUMBER	DESCRIPTION	QTY.
-	GA5004383	Tube, Nylon, 6mm, Black	-
-	GA5065815	O ring, 35 x 4 mm, Suit AS40 fittings	-
-	GA5065820	O ring, 38 x 3 mm, Suits AS40 plumbing fittings	-
1	GA4522640	Mount, suit Altek Rear Camera Manifold	1
2	GA5065690	Retaining pin, Suit AS40 plumbing fittings, Altek	7
3	GA5065620	Hose barb, Elbow, 90 degree, AS40 x 33mm hose barb, Altek	1
4	GA5016233	Pneumatic fitting, Elbow, 90 degree, 1/4" BSP male x 6mm push type, Metal	1
5	GA5065575	Hose barb, Straight, AS40 male x 20mm hose, Altek	1
6	GA5004917	Nut M8 Nyloc ZP	4
7	GA5003643	Washer 8mm Flat SS HD	8
8	GA5004749	Bolt M8 x 80 ZP GR8.8	4
9	GA4582160	Plumbing adaptor, Plug, AS40 male x G1/4" Female Thread, Altek	1
10	GA5065610	Hose barb, Elbow, 90 degree, AS40 x 20mm hose, Altek	3
11	GA5065735	Plumbing adaptor, AS40 male x AS40 male, Altek	1
12	GA5065565	Plumbing coupling, Cross, AS40 female inlets / outlets, Altek	2
13	GA5065585	Plug in hose tail AS40/33	1

RapidFire - Pressure Flow Distributor - ISOBUS

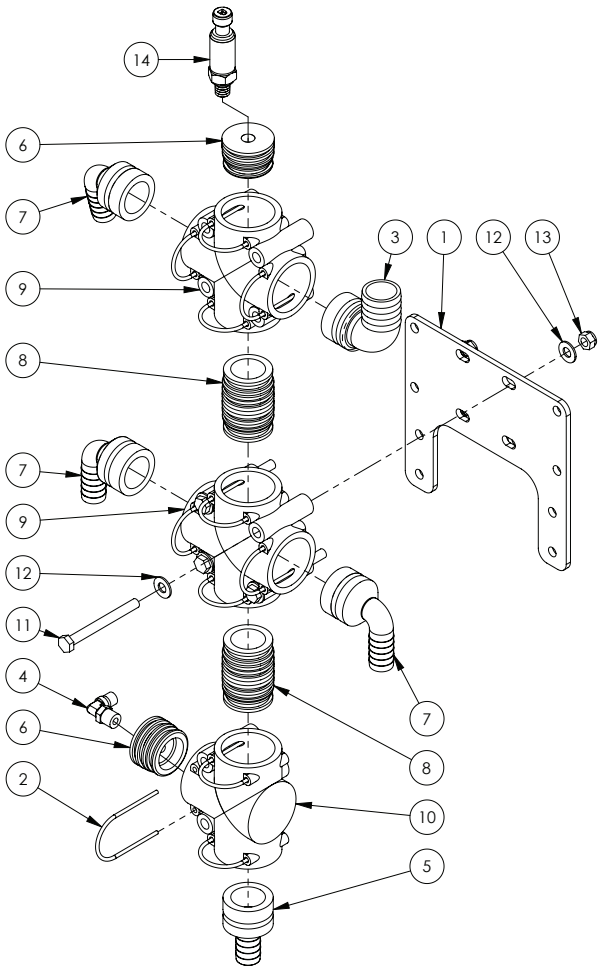

ITEM NO.	PART NUMBER	DESCRIPTION	QTY.
-	GA5065815	O ring, 35 x 4 mm, Suit AS40 fittings	-
-	GA5065820	O ring, 38 x 3 mm, Suits AS40 plumbing fittings	-
-	GA5004383	Tube, Nylon, 6mm, Black	-
1	GA4522640	Mount to suit Altek Rear Camera Manifold	1
2	GA5065690	Retaining pin, Suit AS40 plumbing fittings, Altek	11
3	GA5065620	Hose barb, Elbow, 90 degree, AS40 x 33mm hose barb, Altek	1
4	GA5016233	Pneumatic fitting, Elbow, 90 degree, 1/4” BSP male x 6mm push type	1
5	GA5065575	Hose barb, Straight, AS40 male x 20mm hose, Altek	1
6	GA4582160	Plumbing adaptor, Plug, AS40 male x G1/4” Female Thread, Altek	2
7	GA5065610	Hose barb, Elbow, 90 degree, AS40 x 20mm hose, Altek	3
8	GA5065735	Plumbing adaptor, AS40 male x AS40 male, Altek	2
9	GA5065565	Plumbing coupling, Cross, AS40 female inlets / outlets, Altek	2
10	GA5065560	Tee, AS40 female, M8 inserts, Altek	1
11	GA5004749	Bolt M8 x 80 ZP GR8.8	4
12	GA5003643	Washer 8mm Flat SS HD	8
13	GA5004917	Nut M8 Nyloc ZP	4
14	GA5076953	Pressure Transducer, 0-250 PSI, Sealed, Raven	1

Boom Valves Assembly

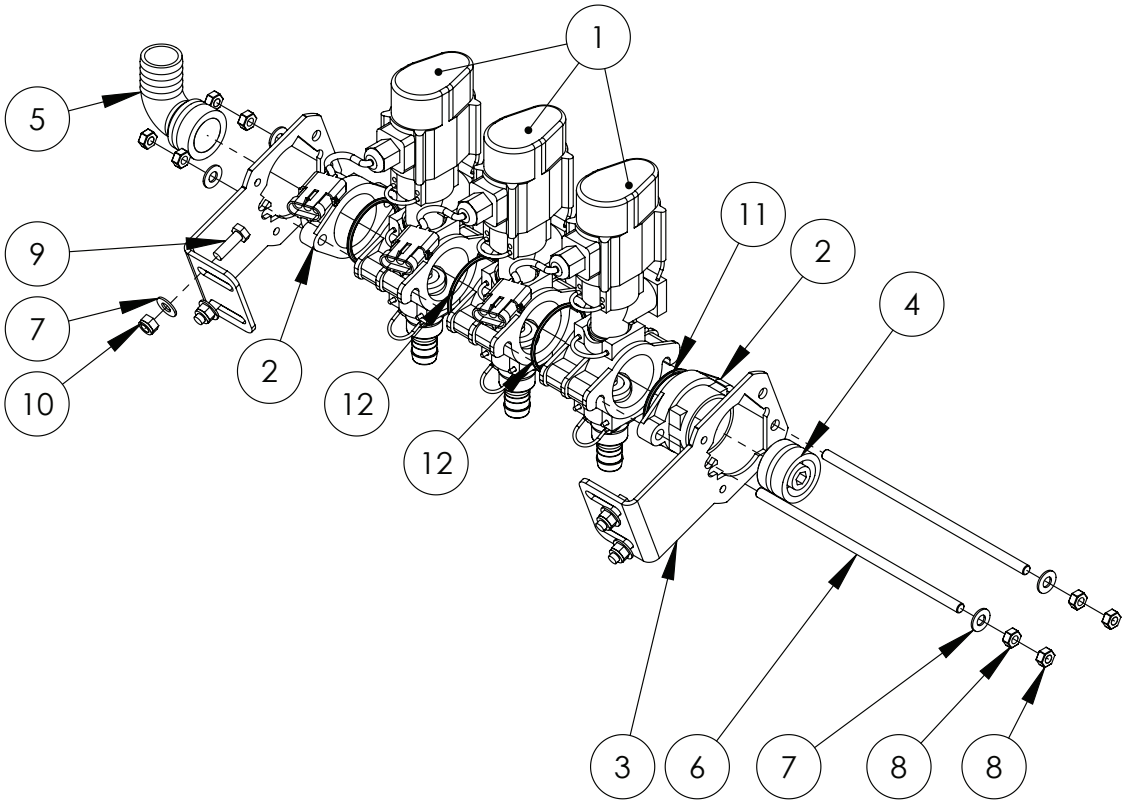

ITEM NO	PART NUMBER	DESCRIPTION	QTY.
1	GA5065515*	Boom valve, Single, AS24, 3 wire, 3 pin AMP connector, Altek	3
2	GA5065810	End cap, Altek boom valve	2
3	GA5065800	Altek boom valve mounting bracket	2
4	GA4582160	Plumbing adaptor, AS40 male x 1/4" female thread, Delrin	1
5	GA5065620	Hose barb, Elbow, 90 degree, AS40 x 33mm hose barb, Altek	1
6	GA5065805	Connecting rod suit 3 bank SS	2
7	GA5003643	Washer 8mm Flat SS HD	12
8	GA5011499	Nut M8 Hex ZP	8
9	GA5004711	Bolt M8 x 25 ZP GR8.8	4
10	GA5004917	Nut M8 Nyloc ZP	4
11	GA5048385	O ring, 42.5 x 2.62 mm, BS131, suit 2” hose barb	2
12	GA5012507	O-Ring 55.25 x 2.62 mm (suit Altek boom valve)	2

* Sub-assembly on following pages

CONNECTING RODS

PART NUMBER	DESCRIPTION
GA5065805	3 Section connecting rod
GA4562055	4 Section connecting rod
GA4562125	5 Section connecting rod
GA4562050	6 Section connecting rod
GA4562045	7 Section connecting rod
GA4562040	8 Section connecting rod

BOOM VALVES

PART NUMBER	DESCRIPTION
GA5065740	3 Section Boom Valves
GA5065741	4 Section Boom Valves
GA5065704	5 Section Boom Valves
GA5065705	6 Section Boom Valves
GA5065706	7 Section Boom Valves
GA5065710	8 Section Boom Valves

NOTE: Boom valve assemblies do not come with plumbing fittings.

Boom Valve Unit Assembly

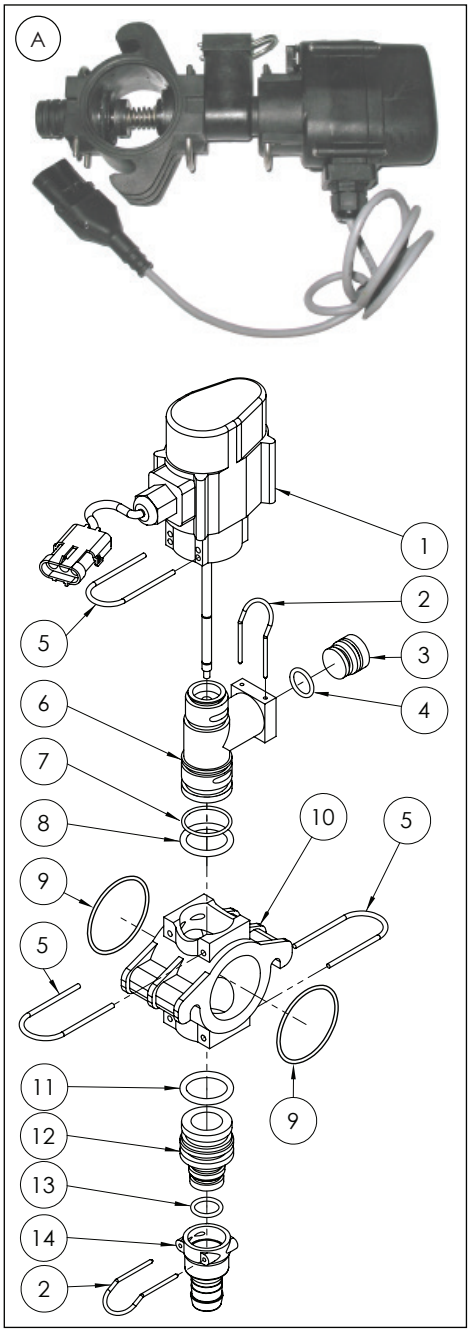

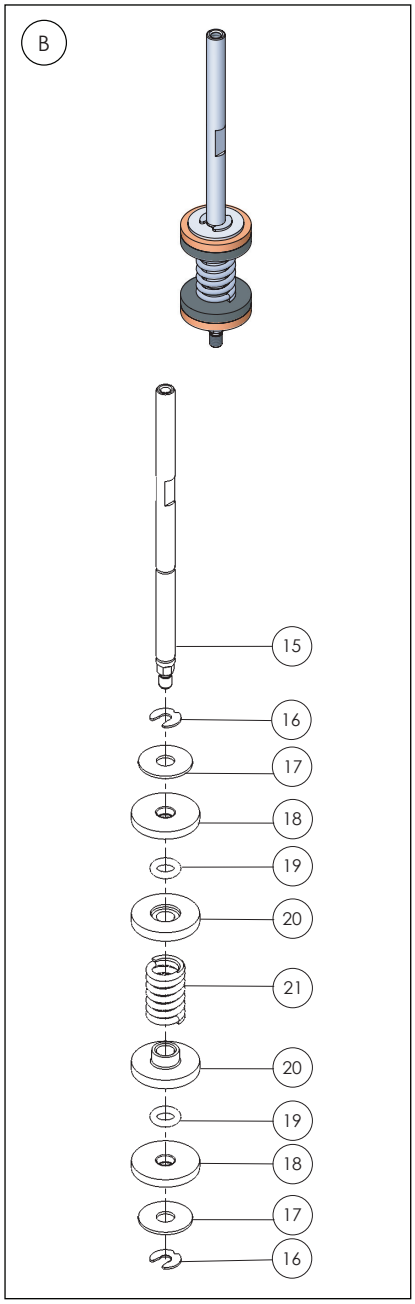

ITEM NO.	PART NUMBER	DESCRIPTION	QTY.
A	GA5065515	Boom valve assembly, Single, AS24, 3 wire, with connector (Includes plunger assembly - Part B)	-
B	GA2000262	Plunger assembly, Boom valve	-

Continued over page

Boom Valve Unit Assembly

ITEM NO.	PART NUMBER	DESCRIPTION	QTY.
1	GA2000266	Switch unit, 3 wire, Weatherpack plug, Boom Valve	1
2	GA5065695	Retaining pin, Suit AS24 plumbing fittings	2
3	GA2000269	Plug, AS24, Altek, 80376	1
4	GA5065840	O ring, 18.0 x 2.5 mm	1
5	GA5065701	Retaining pin, Suit AS30 plumbing fittings	3
6	GA2000267	Valve body, Boom Valve	1
7	GA5053510	O ring, 25 x 2.5 mm	1
8	GA5065830	O ring, 24.3 x 4.2 mm, FPM75	1
9	GA5012507	O Ring 55.25 x 2.62 mm	2
10	GA5065825	Manifold piece, Boom valve	1
11	GA5065830	O ring, 24.3 x 4.2 mm, FPM75	1
12	GA5065835	Plug in adapter, AS30 x AS24	1
13	GA5001067	O Ring 17.1 x 2.6 mm	1
14	GA5065640	Hose barb, AS24 female x 20mm hose	1
15	GA2000263	Plunger rod, Boom valve	1
16	GA5054650	Circlip, Boom Valve	2
17	GA5054640	Washer 17.8 x 6.1 x 1 mm	2
18	GA5054645	Rubber Plunger Seal, Boom Valve	2
19	GA5025250	O-ring, seal, 6 x 2 mm, FPM75, suit boom valve	2
20	GA2000264	Plunger spring cap, Boom valve	2
21	GA2000265	Plunger spring, Boom valve	1

Nozzles - Teejet Single Body

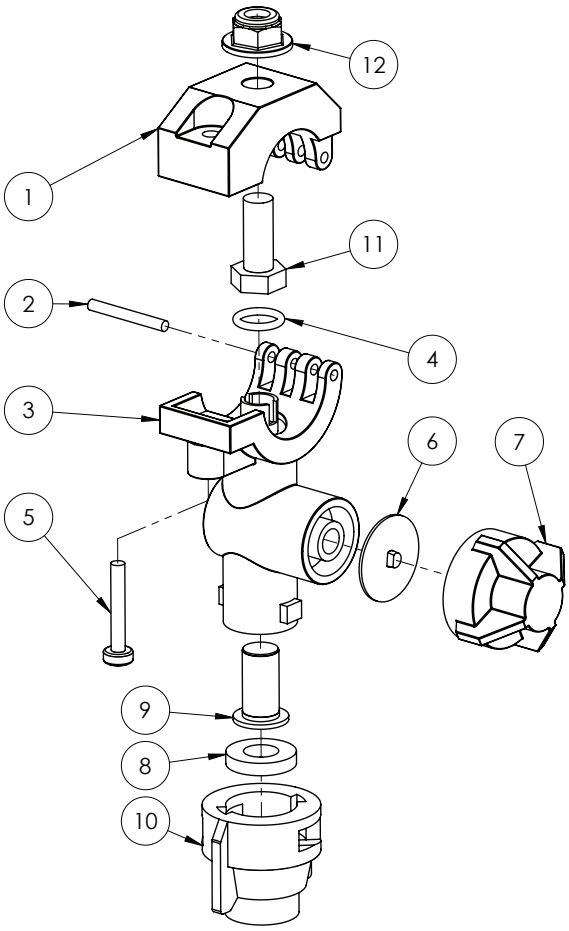

NOTE: Item 6 & 7 are discarded when attaching Spray-Stop

ITEM NO.	PART NUMBER	DESCRIPTION	QTY.
-	GA5077964	Nozzle body, Single, 3/4", Teejet	-
1	GA5077532	Nozzle body clamp, Upper, 3/4", Teejet	1
2	GA5077537	Pin, Nozzle body clamp, Teejet	1
3	GA5077538	3/4" Nylon body	1
4	GA5077596	O-ring, 14.5 x 2.5mm, Buna	1
	GA5077597	O-ring, Viton	
5	GA5077536	Screw, suit Teejet Nozzle bodies, 1-1/4” long, SS	1
6	GA5077439	Chemsaver, Diaphragm, Teejet	1
	GA5077440	Diaphragm, Viton, Nozzle body check valve, Teejet	
7	GA5076670	Chemsaver, 10psi, Black, Teejet	1
8	GA5055245	Washer, Nozzle cap seal, Rubber, 19 OD x 9mm ID	1
9	GA5077159	Filter, Nozzle tip, Red, 50 mesh, Polypropylene & SS, Teejet	1
	GA5077160	Nozzle filter screen, Blue 80 mesh, Polyproylene / SS, Teejet	
10	GA8100464	Nozzle cap, Black, Teejet, Suit flat spray smaller capacity nozzles (up to 08)	1
	GA8100059	Nozzle Cap, 10mm across flats, Black, Lechler	
11	GA5004085	Bolt M8 x 20 GR8.8 ZP	1
12	GA5070710	Nut Flange Plastic M8 x 1.25	1

NOTE: See nozzle tip strainer, cap and nozzle sections on following pages for more detailed nozzle parts guide.

Nozzles - Teejet Clock Face Body

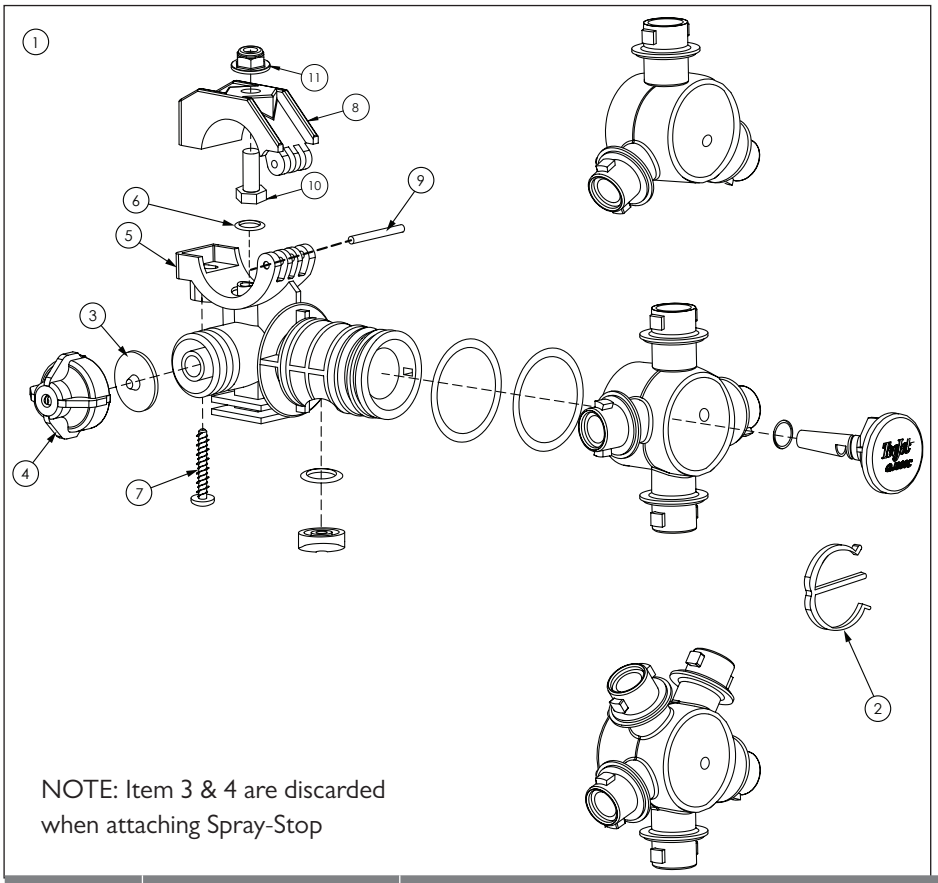

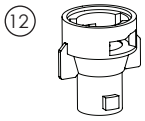

ITEM NO.	PART NUMBER	DESCRIPTION	QTY.
1	GA5077972	Nozzle body assembly, Clock face, 3 outlet, 3/4", Teejet	-
	GA5077974	Nozzle body assembly, Clock face, 4 outlet, 3/4", Teejet	-
	GA5077977	Nozzle body assembly, Clock face, 5 outlet, 3/4", Teejet	-
	GA5077970	Nozzle body, Triple, Trijet, Clock face, 1", Teejet	-
2	GA5077496	E clip, Nozzle body, Teejet	1
3	GA5077439	Chemsaver, Diaphragm, Teejet	1
	GA5077440	Diaphragm, Viton, Nozzle body check valve, Teejet	
4	GA5076670	Chemsaver, 10psi, Black, Teejet	1
5	GA5077493	Body, 360 series 3/4'', Teejet	1
	GA5077494	Body, 360 series 1'', Teejet	1
6	GA5077596	O-ring, 14.5 x 2.5mm, Buna	1
	GA5077597	O-ring, Viton	
7	GA5077536	Screw, suit Teejet Nozzle bodies, 1-1/4" long, SS	1
8	GA5077532	Nozzle body clamp, Upper, 3/4", Teejet	1
	GA5077533	Nozzle body clamp, Upper, 1", Teejet	
9	GA5077537	Pin, Nozzle body clamp, Teejet	1
10	GA5004085	Bolt M8 x 20 GR8.8 ZP	1
11	GA5070710	Nut Flange Plastic M8 x 1.25	1
12	GA5077057	Nozzle body extension, Quick Teejet type, 1" long, Black, Teejet	1

NOTE: See nozzle tip strainer, cap and nozzle sections on following pages for more detailed nozzle parts guide.

Nozzles - Altek Clamp

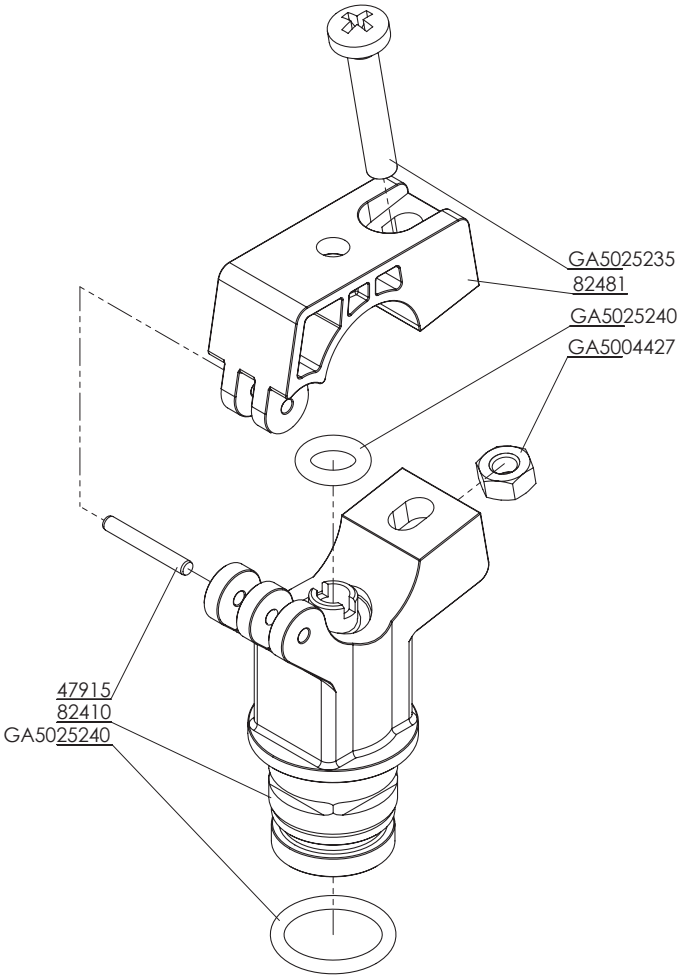

PART NUMBER	DESCRIPTION	QTY.
GA5065900	Clamp, Dual Nozzle Body, suit 3/4" Boom Poly, Includes Screw, Nut and O Ring	-
GA5025235	Screw, M6, Nozzle body clamp, Altek	1
82481	Nozzle body clamp, Upper section, Altek	1
GA5025240	O-ring, 9.5 x 3 mm EPDM, Nozzle body clamp, Altek	1
GA5004427	Nut M6 SS	1
47915	Pin, Nozzle body clamp, Altek	1
82410	Nozzle body clamp, Lower section, Altek	1
GA5025245	O-ring, 19 x 2.65 mm FPM80, Nozzle body clamp, Altek	1

Nozzles - Altek Dual Spray Body

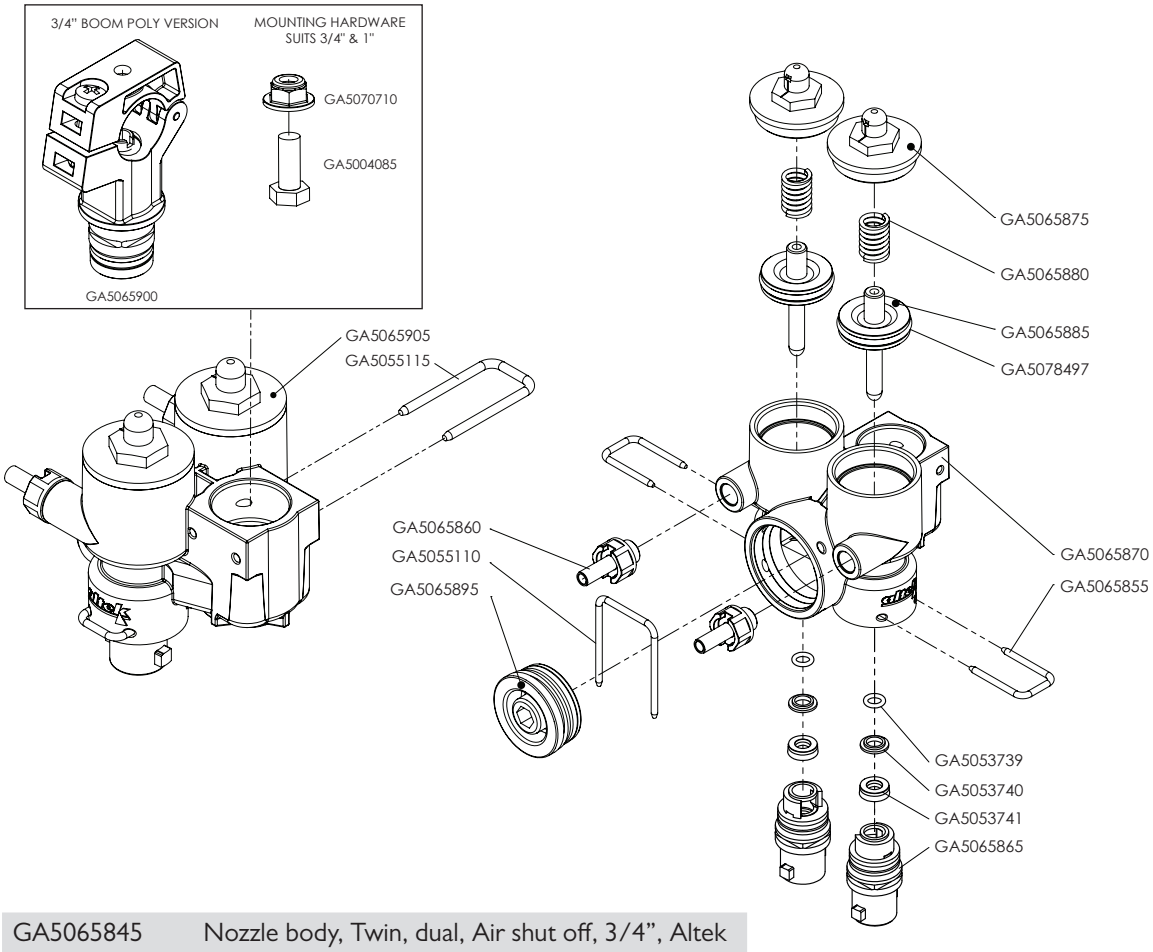

GA5065845	Nozzle body, Twin, dual, Air shut off, 3/4", Altek

PART NUMBER	DESCRIPTION	QTY.
GA5070710	Nut Flange Plastic M8 x 1.25	1
GA5004085	Bolt M8 x 20 GR8.8 ZP	1
GA5065900	Nozzle body clamp, suit 3/4" Boom poly, Includes Screw, Nut and O-ring	1
GA5065905	Lower body, Multi spray, Altek	1
GA5055115	U clip, 20 x 40 x 3mm	1
GA5065875	Top cap	2
GA5065880	Spring	2
GA5065885	Stainless piston complete with O-ring	2
GA5078497	O-ring, 23.5 x 2.6 mm, FPM80	-
GA5065870	Outer body	1
GA5065855	U-Clip	2
GA5065865	Outlet, Valve inner, Nozzle body, Altek	2
GA5065860	Hose barb, Air fitting, 6mm hose, male thread, includes seal	2
GA5055110	U Clip 30 x 41 x 2.5mm	1
GA5065895	Shutoff Plug	1
GA5053739	O-ring, 5.6mm x 1.8mm FMP, suit GA5065845, Altek	2
GA5053740	Retaining disk, 11.8mm x 6.8mm x 2mm, suit GA5065845, Altek	2
GA5053741	Lip seal, 6mm x 12mm x 4.2mm FMP, suit GA5065845, Altek	2

Nozzles - Altek Spray Stop - Push On Type

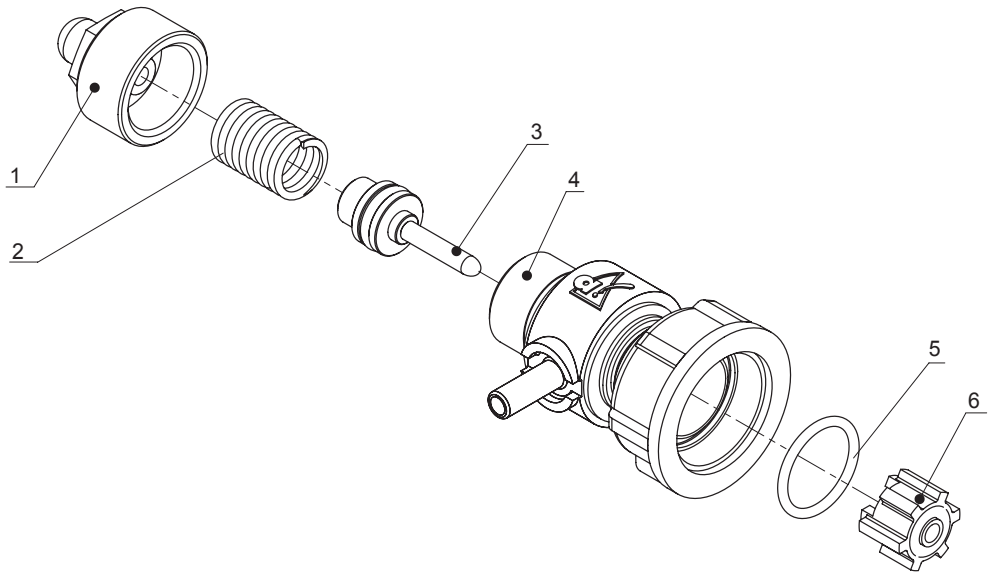

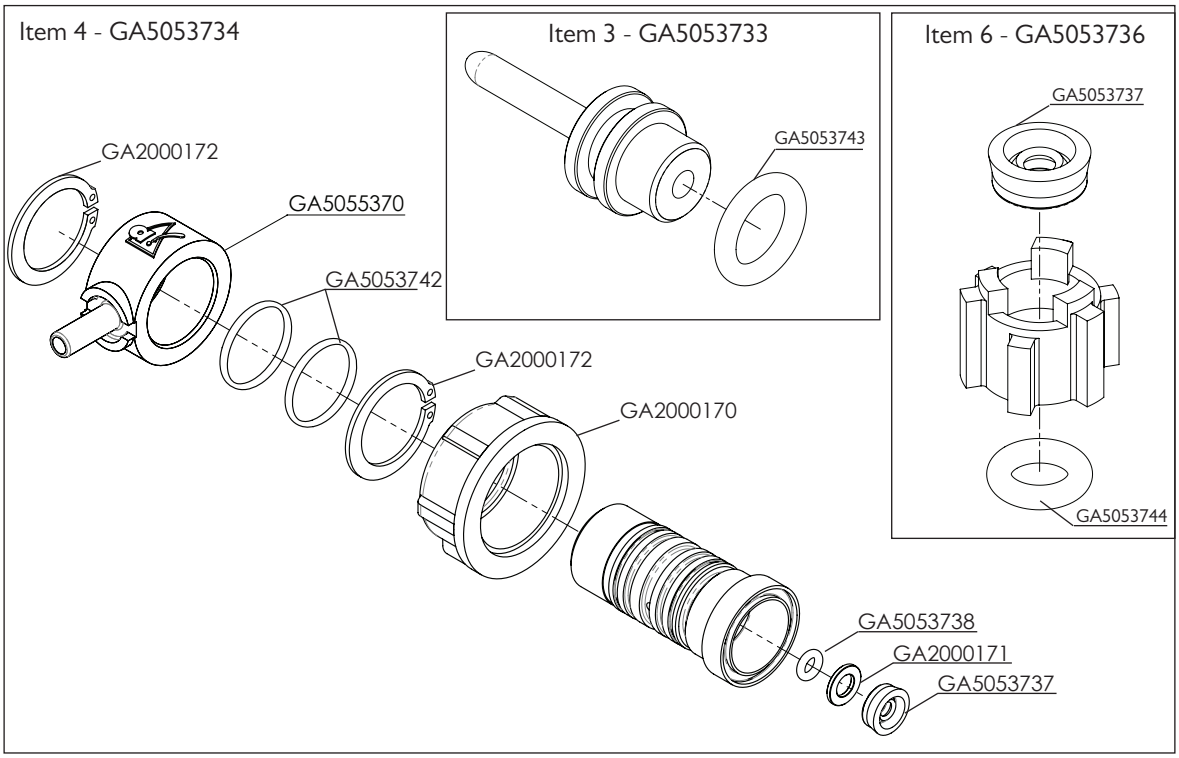

ITEM NO.	PART NUMBER	DESCRIPTION	QTY.
-	GA5065520	Spray Stop, RapidFire, Suit Teejet nozzle body, Altek	-
1	GA5053731	End Cap with Breather	1
2	GA5053732	Spring, 10 Bar	1
3	GA5053733	Piston	1
4	GA5053734	Valve Body	1
5	GA5053735	O-ring external	1
6	GA5053736	Plunger	1

Nozzles - Altek Spray Stop - Push In Type

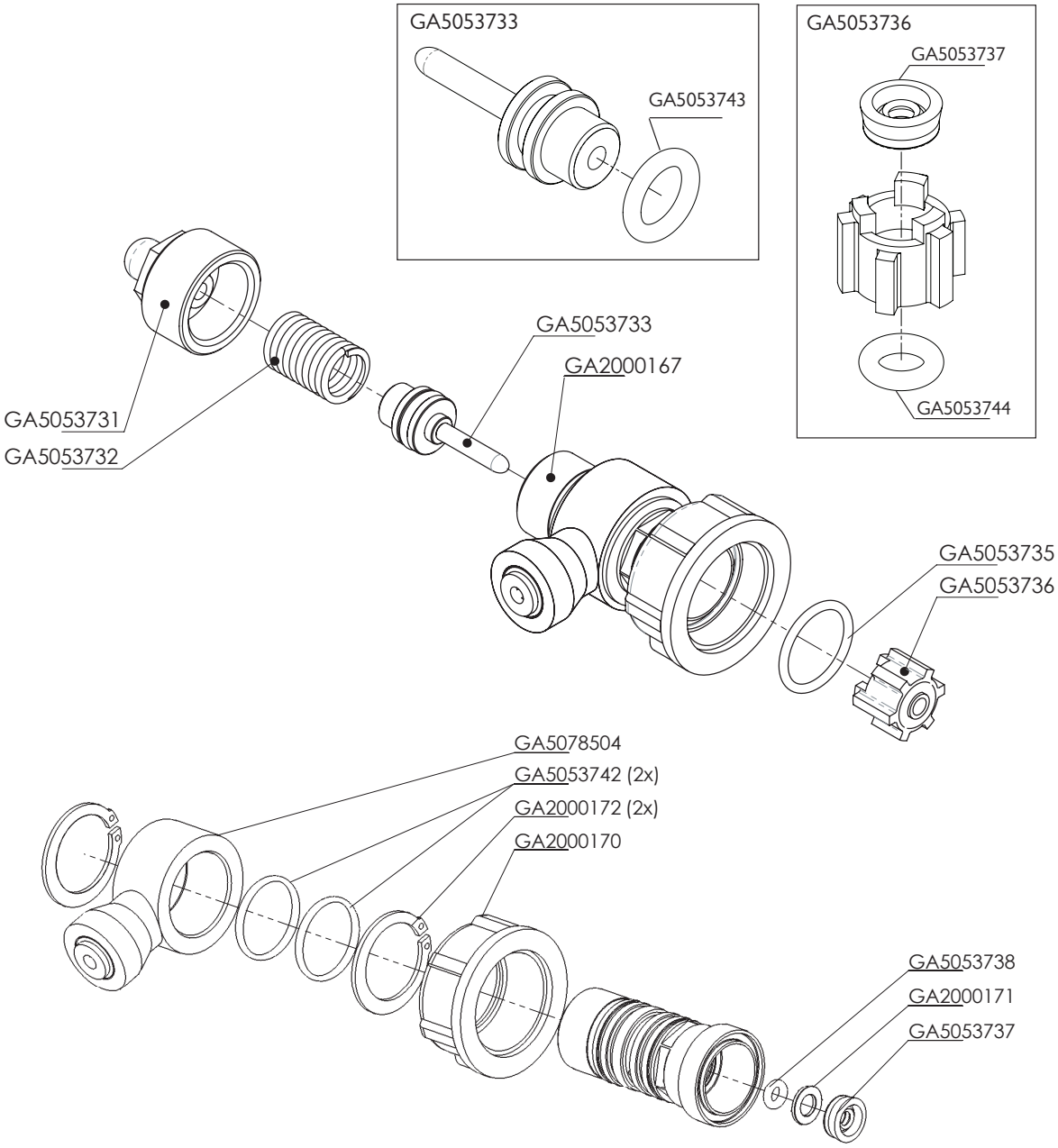

PART NUMBER	DESCRIPTION	QTY.
GA5065523	Spray Stop, 4mm, Rapidfire, Suit Teejet nozzle body, Altek	-
GA5053731	End Cap with Breather	1
GA5053732	Spring, 10 Bar	1
GA5053733	Piston	1
GA5053734	Valve Body	1
GA5053735	O-ring external	1
GA5053736	Plunger	1

Nozzles - Direct Control - Single

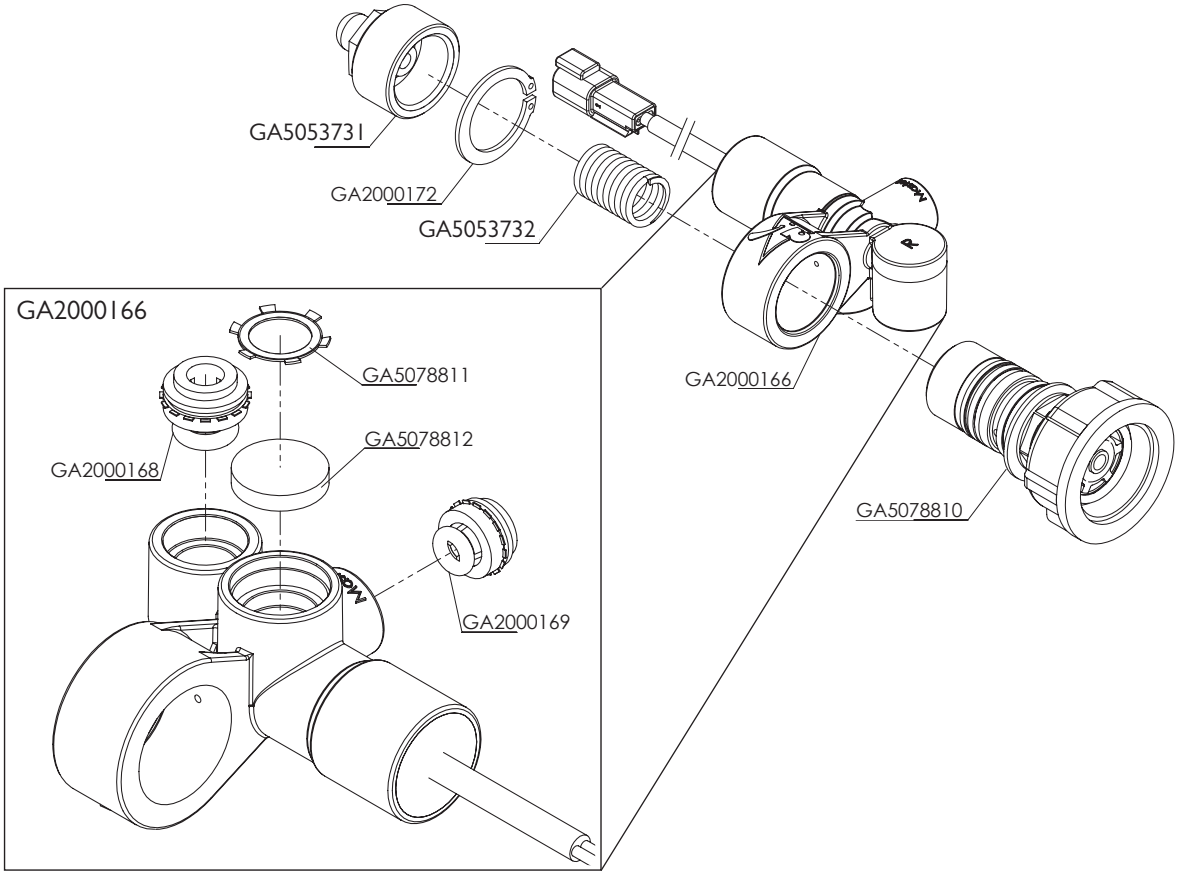

PART NUMBER	DESCRIPTION	QTY.
GA5065525	Spray Stop, Solenoid Direct control, Rapidfire, 6mm in, 4mm out	-
GA5053731	End Cap with Breather, suit GA5065520 Spray Stop, Altek	1
GA2000172	Circlip, Spray stop, Altek, 81376	1
GA5053732	Spring, 10 Bar, suit Spray Stop, Altek	1
GA2000166	Single nozzle body assembly, Direct control, Deutsch connector	1
GA5078810	Cartridge, Spray-Stop, Teejet, 83224	1
GA5078811	Clip, Breather Retainer, Altek, 84033	1
GA5078812	Breather Insert, Direct Control, Altek, 84003	1
GA2000168	Inlet cartridge, 6mm, Plastic, Includes O-ring, Altek, 83250	1
GA2000169	Oulet cartridge, 4mm, Plastic, Includes O-ring, Altek, 83759	1

Nozzles - Direct Control - Dual

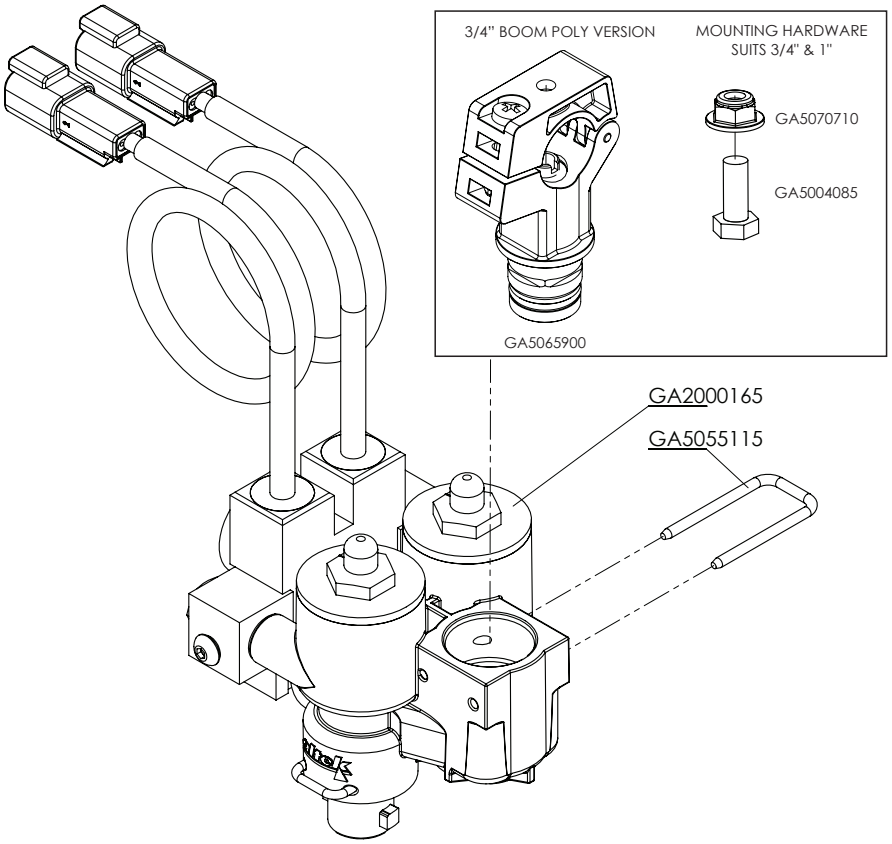

PART NUMBER	DESCRIPTION	QTY.
GA5065846	Spray Stop, Nozzle body, Twin, dual, Solenoid Direct control Multi-Spray master, Air shut off, 3/4"	-
GA5070710	Nut Flange Plastic M8 x 1.25	1
GA5004085	Bolt M8 x 20 GR8.8 ZP	1
GA5065900	Nozzle body clamp, suit 3/4" Boom poly, Includes Screw, Nut and O-ring	1
GA2000133	Nozzle body clamp, suit 1" Boom poly, Includes Screw, Nut and O-ring	1
GA2000165	Dual nozzle body assembly, Direct control	1
GA5055115	U clip, 20 x 40 x 3 mm, 82297, Suit Altek nozzle body GA5065845	1

Nozzles - Direct Control - Dual Assembly

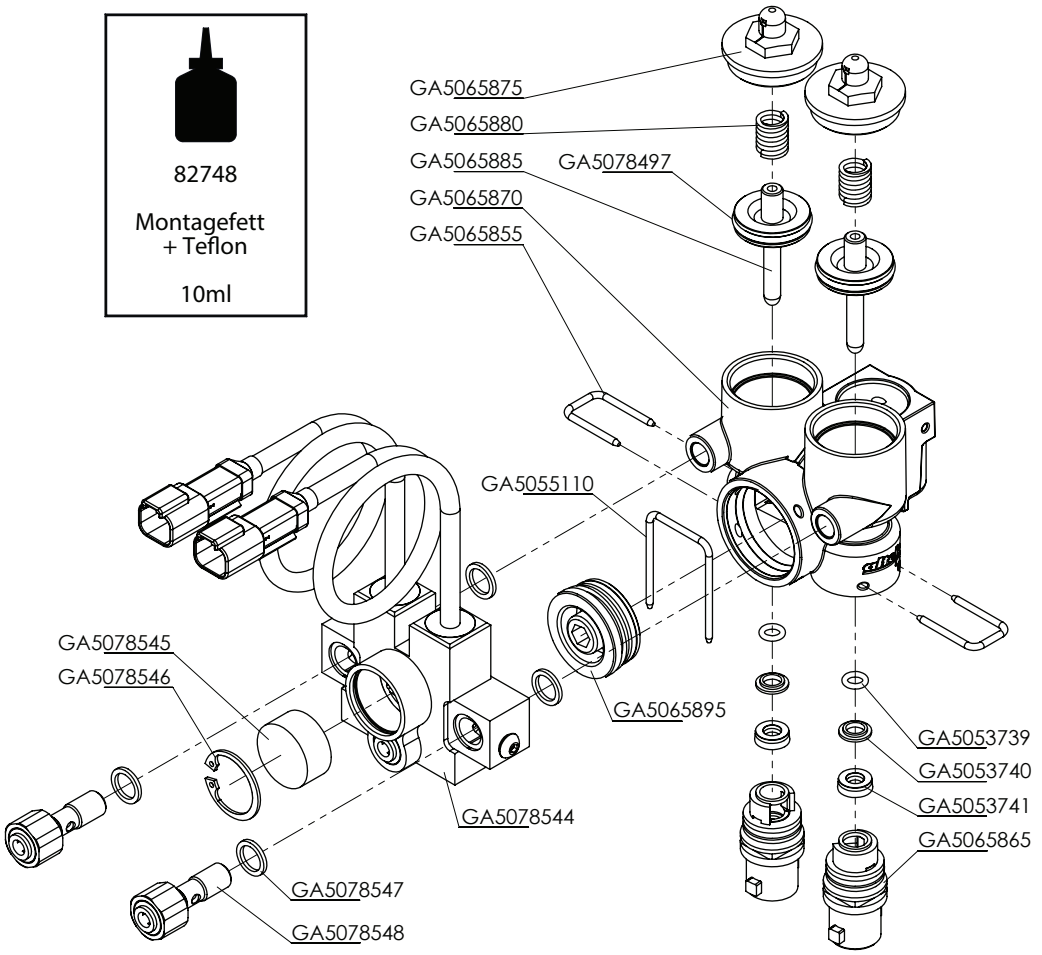

PART NUMBER	DESCRIPTION	QTY.
GA5078544	Dual solenoid valve, including 200mm cables & Deutsch connectors	1
GA5065870	Housing Multi-Spray 2-Nozzle	1
GA5053739	O-Ring	2
GA5053740	Stainless washer	2
GA5053741	Lip Seal 6 x 12 x 4.2 mm	2
GA5065865	Nozzle Holder 5° Complete, 0°, 0°	2
GA5065855	U-Clip AS20	2
GA5065885	Stainless piston complete with O-ring	2
GA5078497	O-ring, 23.5 x 2.6 mm, FPM80	-
GA5065880	Spring	2
GA5065875	Cylinder Cap	2
GA5065895	Blanking Plug	1
GA5055110	U-clip 30 x 41 x 2.5 mm	1
GA5078547	Seal, White PVC	4
GA5078545	Breather insert, 25.5 x 12 x 12 mm	1
GA5078546	Circlip, 26 x1.2 mm	1
GA5078548	Push fitting, Air line, 6mm	2

Nozzles - Fence Line - Solenoid Operated

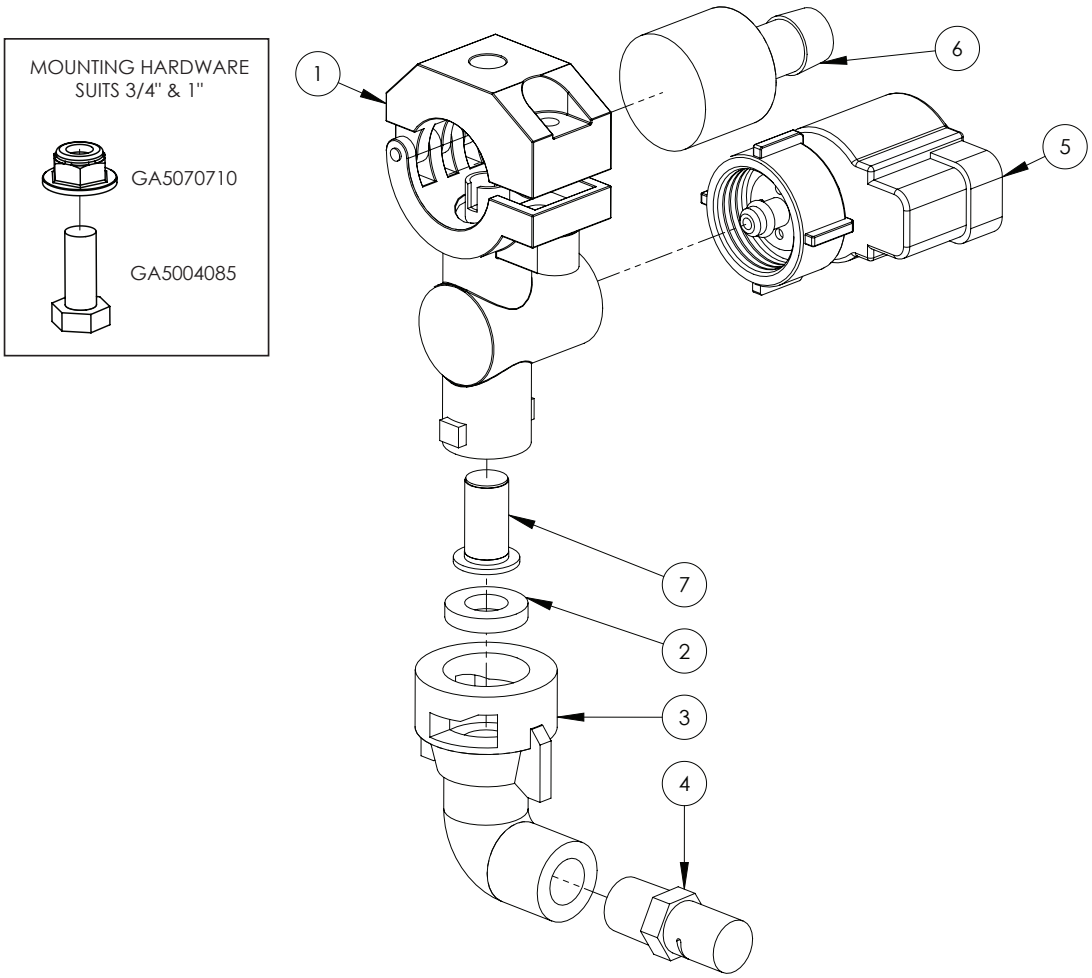

ITEM NO.	PART NUMBER	DESCRIPTION	QTY.
1	GA5077964	Nozzle body, Single, 3/4", Teejet	1
	GA5077988	Nozzle body, Single, 1", Teejet	1
	GA5070710	Nut Flange Plastic M8 x 1.25	1
	GA5004085	Bolt M8 x 20 GR8.8 ZP	1
2	GA5055245	Washer, Nozzle cap seal, Rubber, 19 OD x 9mm ID	1
3	GA5077986	Nozzle cap & washer, 90 degree cap, 1/4" NPT female outlet	1
4	GA8100339	Nozzle, Fence line, Orange, Polymer, Left side, 1/4" NPT, Teejet	1
	GA8100340	Nozzle, Fence line, Orange, Polymer, Right side, 1/4" NPT, Teejet	1
5	GA5071785	Solenoid, e-Chemsaver suit 2 Pin Metri-pack, Fence Line	1
6	GA5077497	Hose barb suit nozzle body, Single 1/2", Nylon, Teejet	1
7	GA5076947	Check valve & filter screen, Nozzle tip, 5psi valve, 50 mesh	1

Nozzles - Tip Strainers

PART NUMBER	DESCRIPTION
GA5076947	Tip strainer, Check valve, 5 PSI, Polypropylene / Stainless steel, 50 mesh, Teejet
GA5077158	Tip strainer, Polypropylene / Stainless steel, 24 mesh, Teejet
GA5077159	Tip strainer, Polypropylene / Stainless steel, 50 mesh, Teejet
GA5077160	Tip strainer, Polypropylene / Stainless steel, 80 mesh, Teejet
GA5077156	Tip strainer, Polypropylene / Stainless steel, 100 mesh, Teejet
GA5077157	Tip strainer, Polypropylene / Stainless steel, 200 mesh, Teejet

Nozzles - IDK - Cap

PART NUMBER	DESCRIPTION
GA8100464	Cap to suit IDK nozzle
GA5055245	Cap washer, IDK nozzle

Nozzles - IDK - Tips

PART NUMBER	DESCRIPTION	STRAINER
GA8100018	IDK 120-01, Orange, Lechler	80 mesh
GA8100019	IDK 120-015, Green, Lechler	50 mesh
GA8100020	IDK 120-02, Yellow, Lechler	50 mesh
GA8100021	IDK 120-025, Purple, Lechler	50 mesh
GA8100022	IDK 120-03, Blue, Lechler	50 mesh
GA8100023	IDK 120-04, Red, Lechler	50 mesh
GA8100024	IDK 120-05, Brown, Lechler	24 mesh
GA8100025	IDK 120-06, Grey, Lechler	24 mesh
GA8100026	IDK 120-08, White, Lechler	24 mesh

Nozzles - ID3 - Cap

PART NUMBER	DESCRIPTION
GA8100059	Cap to suit ID3 nozzle
GA5055245	Cap washer, ID3 nozzle

Nozzles - ID3 - Tips

PART NUMBER	DESCRIPTION	STRAINER
GA8100000	ID3 120-01, Orange, Lechler	80 mesh
GA8100001	ID3 120-015, Green, Lechler	50 mesh
GA8100002	ID3 120-02, Yellow, Lechler	50 mesh
GA8100003	ID3 120-025, Purple, Lechler	50 mesh
GA8100004	ID3 120-03, Blue, Lechler	50 mesh
GA8100005	ID3 120-04, Red, Lechler	50 mesh
GA8100006	ID3 120-05, Brown, Lechler	24 mesh
GA8100007	ID3 120-06, Grey, Lechler	24 mesh
GA8100008	ID3 120-08, White, Lechler	24 mesh

Nozzles - AIXR - Tips

PART NUMBER	DESCRIPTION	STRAINER
GA8100429	AIXR110015VP, Green 015, Polymer, Teejet	100 mesh
GA8100430	AIXR110025VP, Violet 025, Polymer, Teejet	50 mesh
GA8100431	AIXR11002VP, Yellow 02, Polymer, Teejet	50 mesh
GA8100432	AIXR11003VP, Blue 03, Polymer, Teejet	50 mesh
GA8100433	AIXR11004VP, Red 04, Polymer, Teejet	50 mesh
GA8100434	AIXR11005VP, Brown 05, Polymer, Teejet	50 mesh
GA8100435	AIXR11006VP, Grey 06, Polymer, Teejet	50 mesh

Plumbing Lines - Miscellaneous

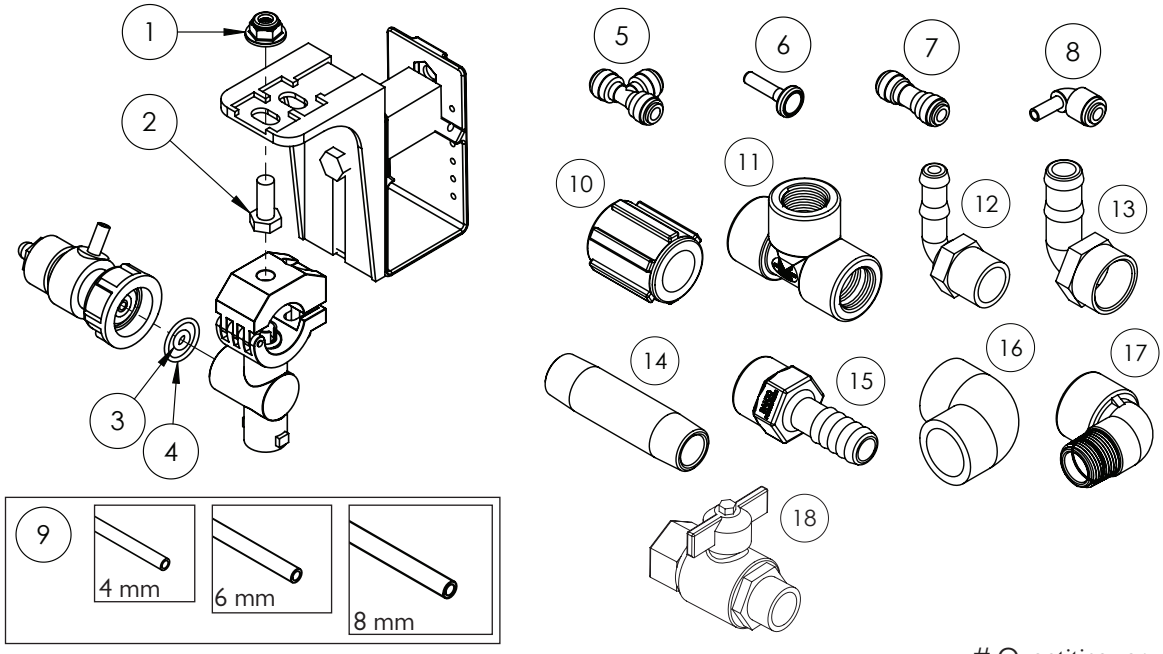

Quantities vary

ITEM NO.	PART NUMBER	DESCRIPTION	QTY.
1	GA5070710	Nut with flange, Plastic, M8 x 1.25P	#
2	GA5004085	Bolt M8 x 20 GR8.8 ZP	#
3	GA5065521	O ring, 6.02 x 2.62 mm, Suits spray stop inner	#
4	GA5053135	O ring, 18 x 2 mm, Suit spray stop outer	#
5	GA5016246	Tee, Equal, 4mm push in type, Black plastic	#
	GA5016245	Tee, Equal, 6mm push in type, Black plastic	#
	GA5067010	Tee, Equal, 8mm push in type, Black plastic	#
6	GA5004405	Plug, Push in, 6mm	#
7	GA5066991	Pneumatic fitting, Push in, Joiner, 6mm	#
	GA5054600	Push in fitting, reducer, straight, 6mm to 4mm	#
	GA5065175	Push in fitting, reducer, straight, 8mm to 6mm	#
8	GA5071215	Stem Elbow, suit 6mm air line, push in	#
9	GA5004384	Tube, Nylon, 4mm, Black	#
	GA5004386	Tube, Nylon, 4mm, Blue	#
	GA5004383	Tube, Nylon, 6mm, Black	#
	GA5004385	Tube, Nylon, 6mm, Blue	#
	GA7000002	Tube, Nylon, 6mm, Red	#
	GA5004382	Tube, Nylon, 8mm, Black	#
10	GA5077637	Coupling, socket, 3/4" female thread	#
	GA5077638	Coupling, socket, 1" female thread	#
11	GA5078150	Tee, Threaded, 3/4" female	#
	GA5078151	Tee, Threaded, 1” female	#
12	GA5077710	Hose barb, Elbow, 90 degree, 3/4" male thread x 1/2" hose	#
	GA5077723	Hose barb, Elbow, 90 degree, 1” male thread x 1” hose	#

Continued over page

Plumbing Lines - Miscellaneous

ITEM NO.	PART NUMBER	DESCRIPTION	QTY.
13	GA5077746	Hose barb, Elbow, 90 degree, 3/4" female thread x 3/4" hose	#
14	GA5049090	BSP Riser 3/4" x 100 mm	#
15	GA5077743	Hose barb, Straight, 3/4" female x 3/4" hose	#
	GA5077747	Hose barb, Straight, 1" female thread x 1" hose	#
16	GA5077653	Street elbow, 90 degree, 3/4" female thread	#
	GA5077655	Street elbow, 90 degree, 1" female thread	#
17	GA5078135	Street elbow, 90 degree, 3/4" female thread x 3/4" male thread	#
	GA5078137	Street elbow, 90 degree, 1" female thread x 1" male thread	#
18	GA5018315	Valve, Ball, 20mm male & female thread, Black Butterfly handle	#

Boom Poly - Pipe Clamps - Singles

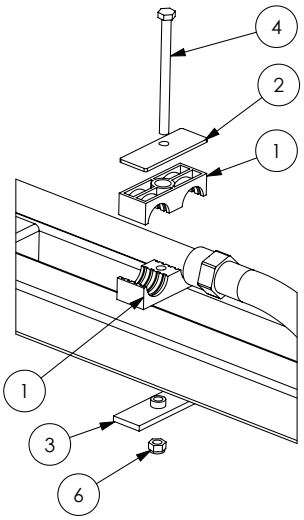

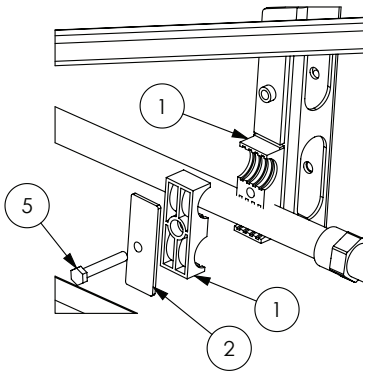

Quantities vary

ITEM NO.	PART NUMBER	DESCRIPTION	QTY.
1	GA5078038	RCD clamp jaws, Double 28mm hose, Black polyproylene	#
2	GA5078049	Hose clamp, Double RCD, Top plate, Grade 4, Suit clamp 28-30	#
3	GA5078048	Double Clamp Plate Bottom Gr4	#
4	GA5011501	Bolt M8 x 120 GR8.8 ZP	#
5	GA5004727	Bolt M8 x 50 ZP GR8.8	#
6	GA5052590	Nut M8 Nyloc SS	#

Boom Poly - Pipe Clamps - Multi

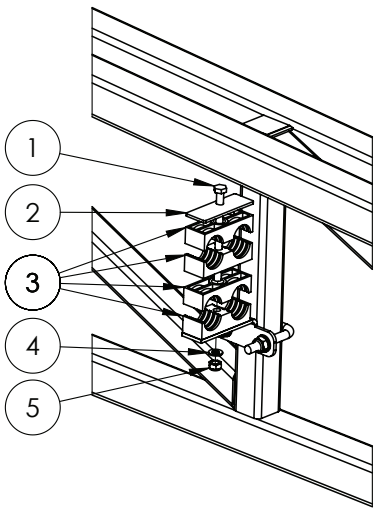

ALUMINIUM OUTER WING

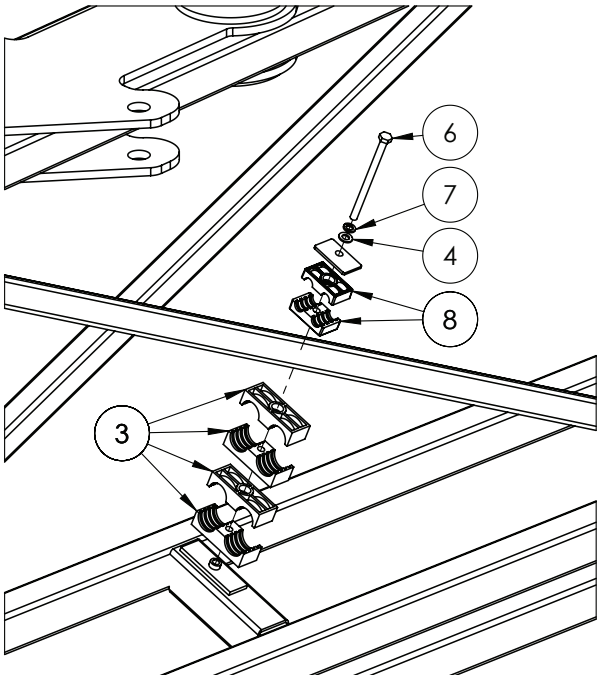

STEEL INNER WING

Quantities vary

ITEM NO.	PART NUMBER	DESCRIPTION	QTY.
1	GA5004933	Bolt M8 x 110 GR8.8 ZP	#
2	GA5078049	Mounting Clamp, Double type, Plate, Top, Group 4	#
3	GA5078038	Mounting clamp, Double type, Jaw, Pair, Group 4, 28mm	#
4	GA5003643	Washer 8mm Flat SS HD	#
5	GA5052590	Nut M8 Nyloc SS	#
6	GA5011501	Bolt M8 x 120 GR8.8 ZP	#
7	GA5004919	Washer 8mm Spring SS	#
8	GA5078031	Mounting clamp, Double type, Jaw, Pair, Group 2, 14mm	#

Plumbing Lines - Nozzle Brackets

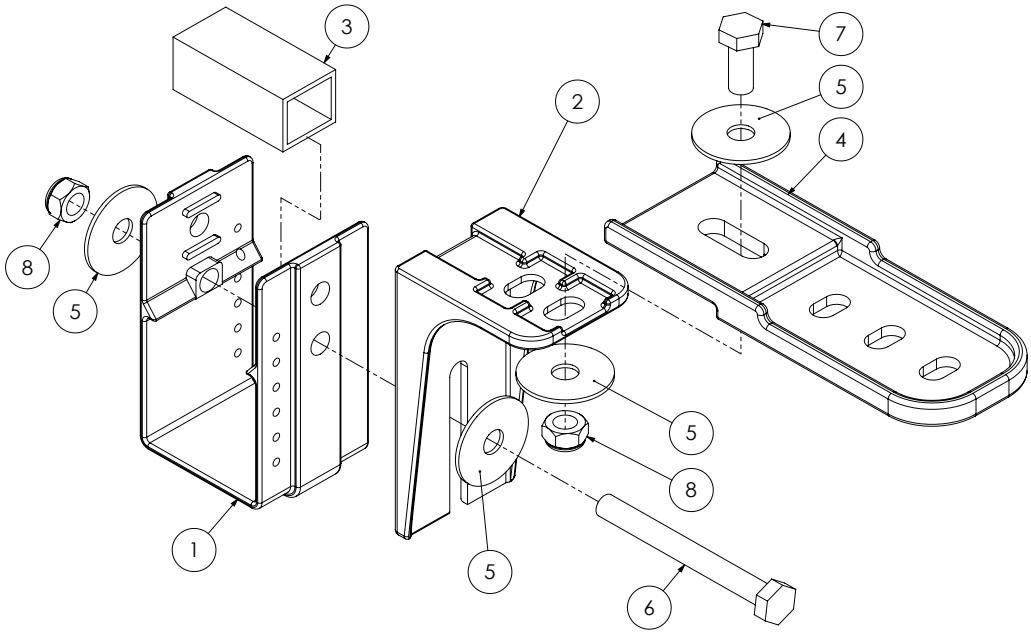

ITEM NO.	PART NUMBER	DESCRIPTION	QTY
1	GA5018259	Nozzle bracket, plastic, U shape	1
2	GA5018257	Nozzle bracket, plastic, L shape, short	1
	GA5018258	Nozzle bracket, plastic, L shape, long	
3	GA5066965	Spacer suit nozzle brackets	1
4	GA5018255	Bracket, Nozzle extension, Plastic	1
5	GA5003645	Washer 5/16" ID x 1 1/4" OD Flat SS	4
6	GA5004741	Bolt M8 x 75 GR8.8 ZP	1
7	GA5004085	Bolt M8 x 20 GR8.8 ZP	1
8	GA5004917	Nut M8 Nyloc ZP	2

Plumbing Lines - Nozzle Bracket Kits

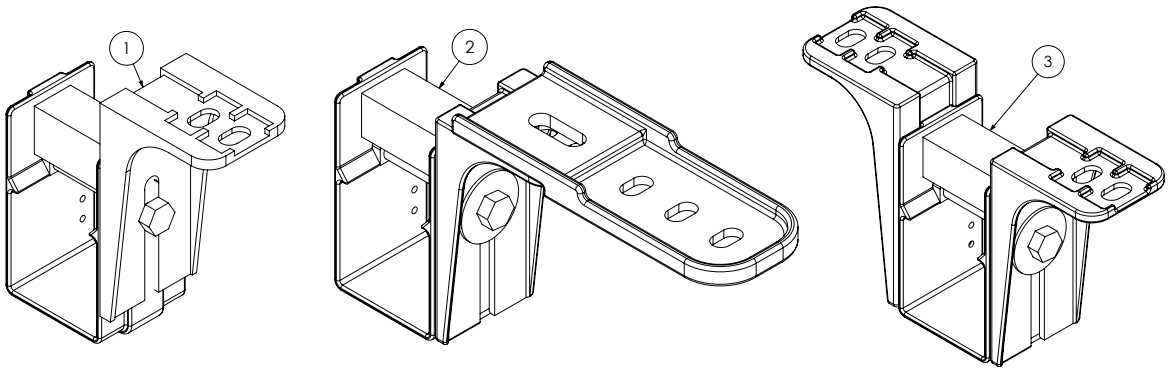

ITEM NO.	PART NUMBER	DESCRIPTION
1	GA4948675-SK	Nozzle bracket kit, Single line, Suit 50mm RHS
2	GA4948695-SK	Nozzle bracket kit, Single line with extension, Suit 50mm RHS
3	GA4948685-SK	Nozzle bracket kit, Dual line, Suit 50mm RHS

Nozzles - Mid Breakaway Assembly

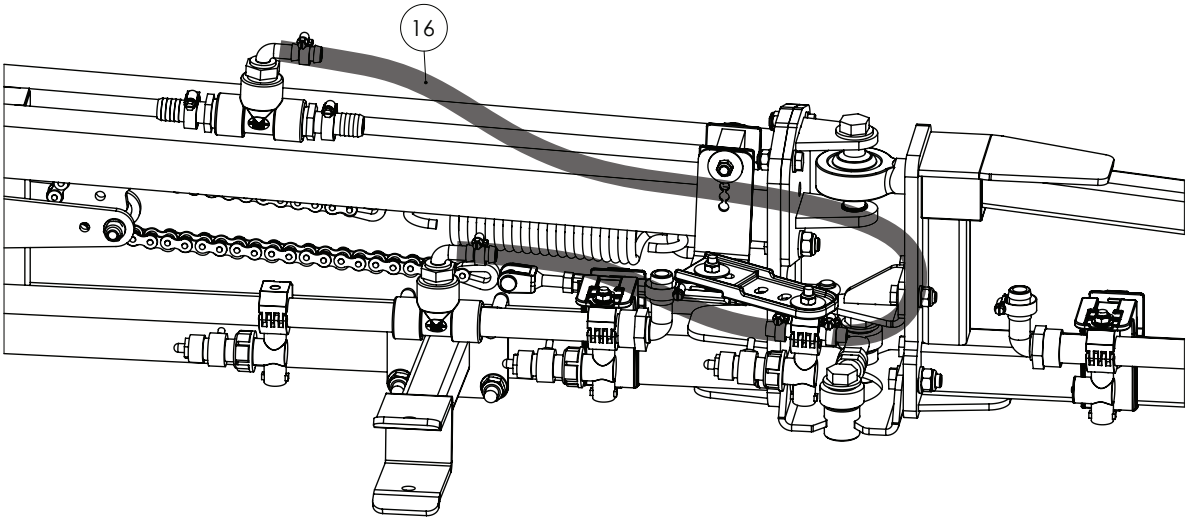

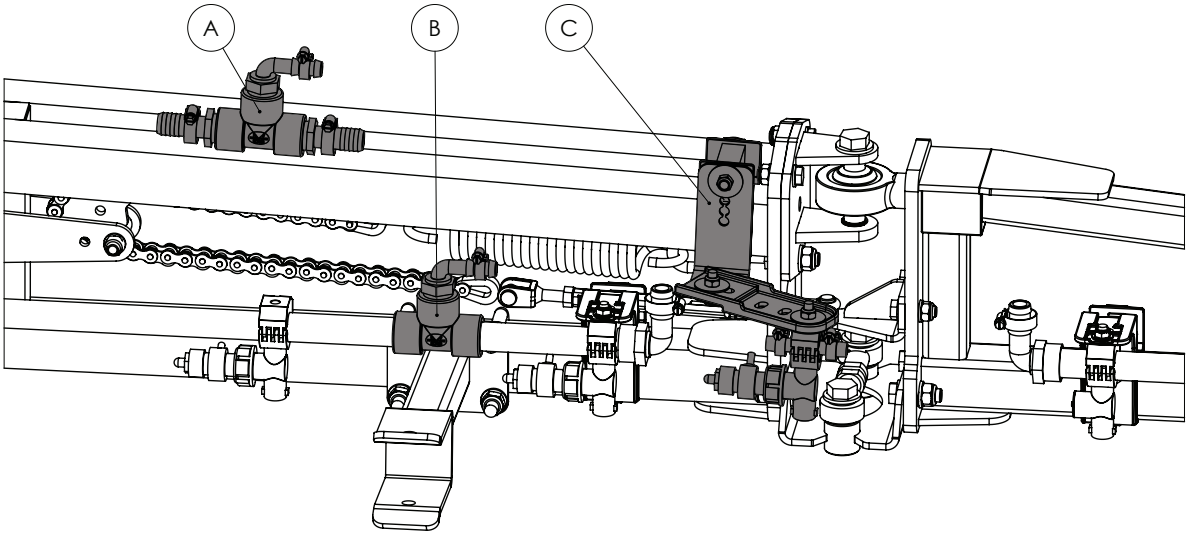

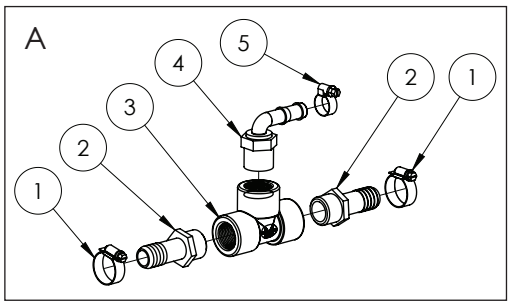

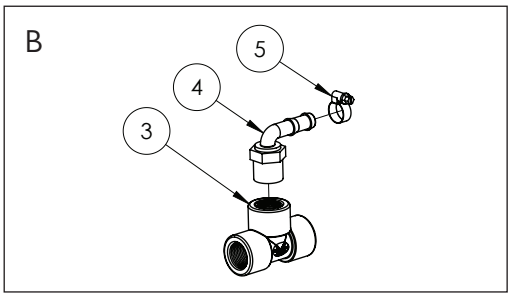

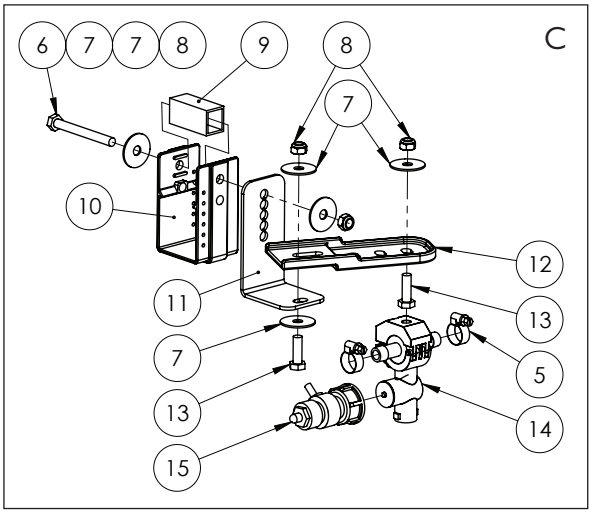

Continued over page

Nozzles - Mid Breakaway Assembly

ITEM NO.	PART NUMBER	DESCRIPTION	QTY.
1	GA5000999	Hose Clamp, 3/4", SS (16-27/12W)	2
2	GA5077709	Hose barb, Straight, 3/4" male thread x 3/4" hose	2
3	GA5078150	Tee, Threaded, 3/4" female	2
4	GA5077710	Hose barb, Elbow, 90 degree, 3/4" male thread x 1/2" hose	2
5	GA5004865	Hose Clamp, 3/8",SS (8-16/9W)	4
6	GA5052600	Bolt M8 x 75 SS A2-70	2
7	GA5003645	Washer 5/16" ID x 1 1/4" OD Flat SS	5
8	GA5004917	Nut M8 Nyloc ZP	3
9	GA5066965	Spacer, square, plastic, 21 x 24 x 50 mm, suits nozzle brackets	1
10	GA5018259	Nozzle bracket, plastic, U shape	3
11	GA4537810	Nozzle bracket Long SS	1
12	GA5018255	Bracket, Nozzle extension, Plastic	1
13	GA5004713	Bolt M8 x 25 SS A2-70	2
14	GA5023620	Teejet Nozzle Body Inline Manifold Assembly 1/2"	1
15	GA5065520	Spray Stop, 6mm, Rapidfire, Suit Teejet nozzle body, Altek	1
16	GA2000211	Hose, Pressure, 12mm, Black, 250psi, HOS13P - Cut to 1000 mm	1

Quantities shown are per side.

Boom Poly - 3/4”- 600mm

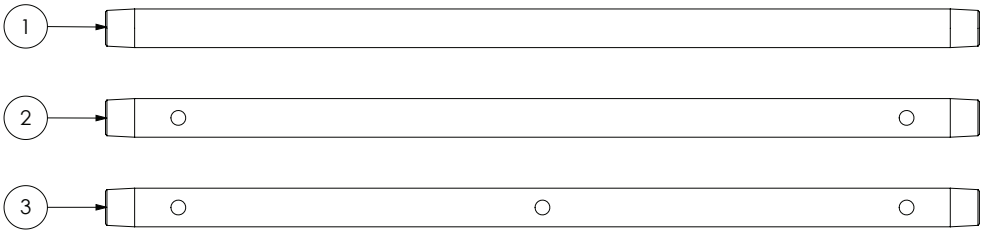

ITEM NO.	PART NUMBER	DESCRIPTION
1	GA5018287	Boom line, Poly, 3/4”, 600 long, No holes
2	GA2000510	Boom line, Poly, 3/4”, 600 long, 2 holes, 500mm spacing
3	GA2000511	Boom line, Poly, 3/4”, 600 long, 3 holes, 250mm spacing

Boom Poly - 3/4”- 1100mm

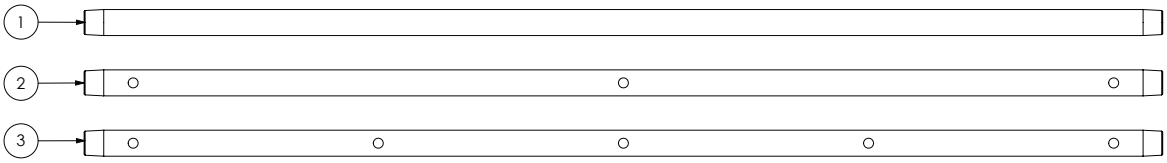

ITEM NO.	PART NUMBER	DESCRIPTION
1	GA5018269	Boom line, Poly, 3/4”, 1100 long, No holes
2	GA2000506	Boom line, Poly, 3/4”, 1100 long, 3 holes, 500mm spacing
3	GA2000507	Boom line, Poly, 3/4”, 1100 long, 5 holes, 250mm spacing

Boom Poly - 3/4”- 1200mm

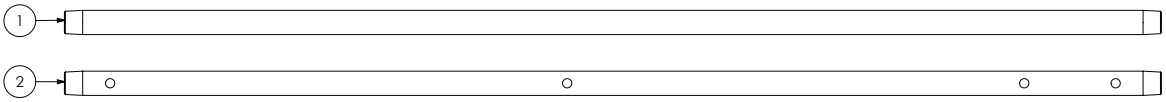

ITEM NO.	PART NUMBER	DESCRIPTION
1	GA5018271	Boom line, Poly, 3/4”, 1200 long, No holes
2	GA2000515	Boom line, Poly, 3/4”, 1200 long, 3 holes plus fenceline, 500mm spacing

Boom Poly - 3/4”- 1600mm

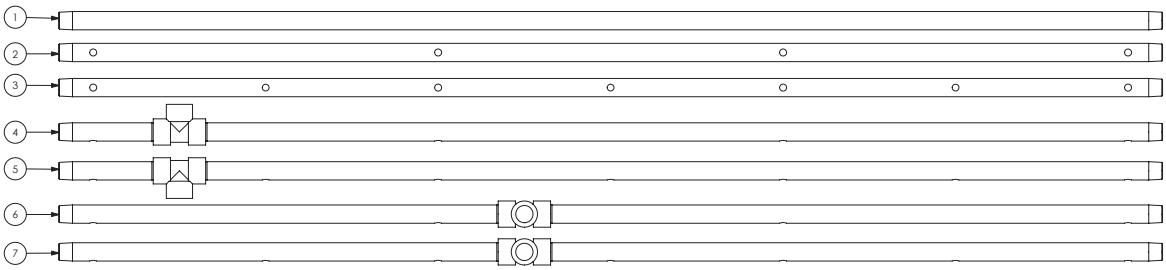

ITEM NO.	PART NUMBER	DESCRIPTION
1	GA5018273	Boom line, Poly, 3/4”, 1600 long, No holes
2	GA2000500	Boom line, Poly, 3/4”, 1600 long, 4 holes, 500mm spacing
3	GA2000501	Boom line, Poly, 3/4”, 1600 long, 7 holes, 250mm spacing
4	GA2000520	Boom line, Poly, 3/4”, 1600 long, 4 holes, 500mm spacing, Tee 175mm
5	GA2000521	Boom line, Poly, 3/4”, 1600 long, 7 holes, 250mm spacing, Tee 175mm
6	GA2000522	Boom line, Poly, 3/4”, 1600 long, 4 holes, 500mm spacing, Tee 675mm 90 Deg.
7	GA2000523	Boom line, Poly, 3/4”, 1600 long, 7 holes, 250mm spacing, Tee 675mm 90 Deg.

Boom Poly - 3/4”- 2100mm

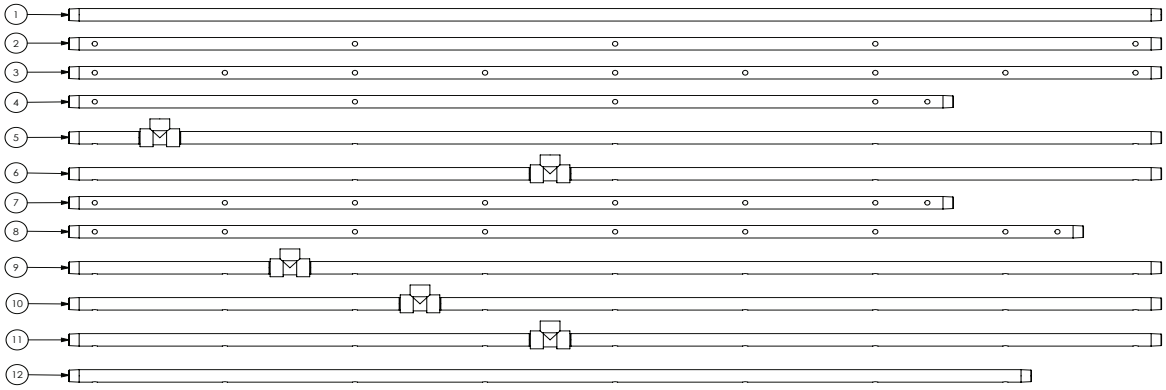

ITEM NO.	PART NUMBER	DESCRIPTION
1	GA5018275	Boom line, Poly, 3/4”, 2100 long, No holes
2	GA2000502	Boom line, Poly, 3/4”, 2100 long, 5 holes, 500mm spacing
3	GA2000503	Boom line, Poly, 3/4”, 2100 long, 9 holes, 250mm spacing
4	GA2000525	Boom line, Poly, 3/4”, 1700 long, 4 holes plus fenceline, 500mm spacing
5	GA2000526	Boom line, Poly, 3/4”, 2100 long, 5 holes, 500mm spacing, Tee 175mm
6	GA2000527	Boom line, Poly, 3/4”, 2100 long, 5 holes, 500mm spacing, Tee 925mm
7	GA2000530	Boom line, Poly, 3/4”, 1700 long, 7 holes plus fenceline, 250mm spacing
8	GA2000531	Boom line, Poly, 3/4”, 1950 long, 8 holes plus fenceline, 250mm spacing
9	GA2000532	Boom line, Poly, 3/4”, 2100 long, 9 holes, 250mm spacing, Tee 425mm
10	GA2000533	Boom line, Poly, 3/4”, 2100 long, 9 holes, 250mm spacing, Tee 675mm
11	GA2000534	Boom line, Poly, 3/4”, 2100 long, 9 holes, 250mm spacing, Tee 925mm
12	GA2000535	Boom line, Poly, 3/4, 1850 long, 8 holes, 250mm spacing

Boom Poly - 3/4”- 2600mm

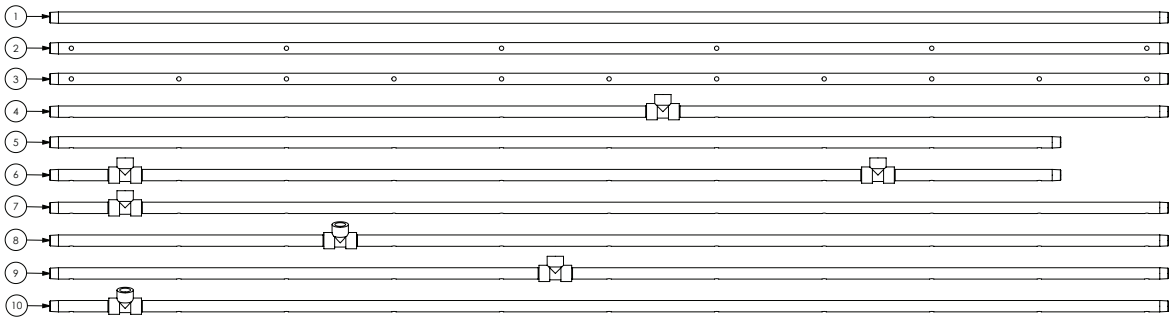

ITEM NO.	PART NUMBER	DESCRIPTION
1	GA5018279	Boom line, Poly, 3/4”, 2600 long, No holes
2	GA2000504	Boom line, Poly, 3/4”, 2600 long, 6 holes, 500mm spacing
3	GA2000505	Boom line, Poly, 3/4”, 2600 long, 11 holes, 250mm spacing
4	GA2000540	Boom line, Poly, 3/4”, 2600 long, 6 holes, 500mm spacing, Tee 1175mm
5	GA2000541	Boom line, Poly, 3/4”, 2350 long, 10 holes, 250mm spacing
6	GA2000542	Boom line, Poly, 3/4”, 2600 long, 10 holes, 250mm spacing, Tee 175mm & 1925mm
7	GA2000543	Boom line, Poly, 3/4”, 2600 long, 11 holes, 250mm spacing, Tee 175mm
8	GA2000544	Boom line, Poly, 3/4”, 2600 long, 11 holes, 250mm spacing, Tee 675mm angled
9	GA2000545	Boom line, Poly, 3/4”, 2600 long, 11 holes, 250mm spacing, Tee 1175mm
10	GA2000546	Boom line, Poly, 3/4”, 2600 long, 11 holes, 250mm spacing, Tee 175mm angled

Boom Poly - 3/4"- 3100mm

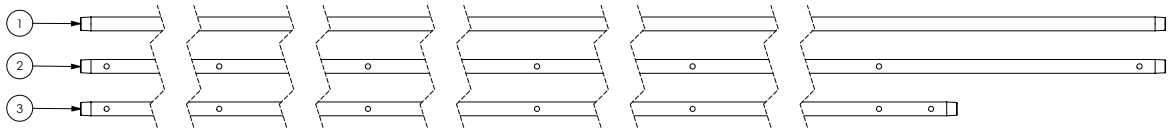

ITEM NO.	PART NUMBER	DESCRIPTION
1	GA5018281	Boom line, Poly, 3/4”, 3100 long, No holes
2	GA2000508	Boom line, Poly, 3/4”, 3100 long, 7 holes, 500mm spacing
3	GA2000550	Boom line, Poly, 3/4”, 2700 long, 6 holes, 500mm spacing

Hoses

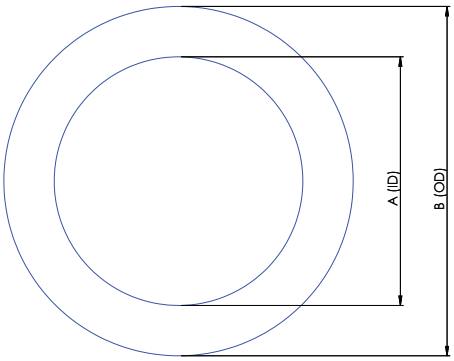

SUCTION HOSE

PART NUMBER	DESCRIPTION	INTERNAL DIAMETER (A)	OUTSIDE DIAMETER (B)
GA2000218	20mm Suction Hose	20mm	32mm
GA2000222	25mm Suction Hose	25mm	35mm
GA2000224	32mm Suction Hose	32mm	45mm
GA2000226	38mm Suction Hose	38mm	48mm
GA2000229	51mm Suction Hose	51mm	63mm
GA2000230	63mm Suction Hose	63mm	76mm
GA2000232	75mm Suction Hose	75mm	93mm

NOTE: Suction hose can be identified by its external green stripe and wire reinforcement.

PRESSURE HOSE

PART NUMBER	DESCRIPTION	INTERNAL DIAMETER (A)	OUTSIDE DIAMETER (B)
GA2000200	7mm Pressure Hose	7mm	12.5mm
GA2000211	13mm Pressure Hose	13mm	20mm
GA2000216	20mm Pressure Hose	20mm	28mm
GA2000219	25mm Pressure Hose	25mm	34mm
GA2000223	32mm Pressure Hose	32mm	43mm
GA2000225	38mm Pressure Hose	38mm	48mm

NOTE: Pressure hose can be identified by its blue internal layer.

PVC HOSE

PART NUMBER	DESCRIPTION	INTERNAL DIAMETER (A)	OUTSIDE DIAMETER (B)
GA2000220	25mm PVC Hose	25mm	32mm
GA2000227	40mm PVC Hose	40mm	50mm
GA2000228	50mm PVC Hose	50mm	58mm

NOTE: PVC Hose can be identified by its ribbed outer surface.

SIGHT TUBE HOSE

PART NUMBER	DESCRIPTION	INTERNAL DIAMETER (A)	OUTSIDE DIAMETER (B)
GA2000209	12mm Clear Sight Tube Hose	12mm	-
GA2000210	12mm Clear Sight Tube Hose with wire	12mm	-

LAY FLAT HOSE

PART NUMBER	DESCRIPTION	INTERNAL DIAMETER (A)	OUTSIDE DIAMETER (B)
GA2000220	25mm PVC Hose	25mm	32mm

Hose Clamps

PART NUMBER	DESCRIPTION
GA5004865	8-16mm Hose Clamp
GA5000469	12-20mm Hose Clamp
GA5000999	16-25mm Hose Clamp
GA5001681	20-32mm Hose Clamp
GA5016813	25-40mm Hose Clamp
GA5002783	30-45mm Hose Clamp
GA5002873	32-50mm Hose Clamp
GA5003325	40-60mm Hose Clamp
GA5016815	50-70mm Hose Clamp
GA5004241	60-80mm Hose Clamp

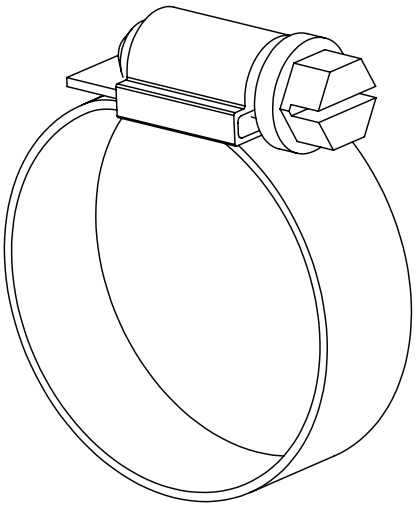

Cable Ties

PART NUMBER	DESCRIPTION
GA5002173	Cable Tie, Black, 100 x 2.5mm
GA5003517	Cable Tie, Black, 140 x 3.5mm
GA5004455	Cable Tie, Black, 190 x 4.5mm
GA5000685	Cable Tie, Black, 320 x 7.5mm
GA5000687	Cable Tie, Black, 360 x 4.5mm
GA5021235	Cable Tie, Black, 540 x 7.5mm

Spiral Guard

PART NUMBER	DESCRIPTION
GA5015669	Spiral guard, Black

Chemical Probe Hose Lance

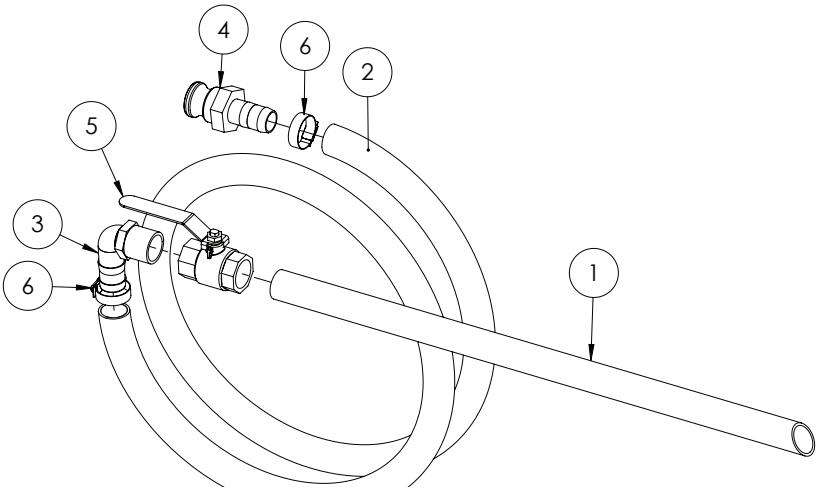

ITEM NO.	PART NUMBER	DESCRIPTION	QTY.
-	GA4948250	Chemical suction probe, Assembled	-
1	GA5013603	Poly Pipe 25 (cut 630mm long)	1
2	GA2000220	Hose, Suction, PVC, 25mm, Black - cut 3200 mm long	1
3	GA5077723	Hose barb, Elbow, 90 degree, 1" male x 1" hose, Banjo	1
4	GA5076011	Cam lever, 1" male coupling x 1" hose barb, Banjo	1
5	GA5018319	Valve, Ball, 25mm female thread inlet / outlet, Lever handle, SS	1
6	GA5001681	Hose Clamp, 1" SS (20-32/12W)	2

Enviro Coupling & Hose

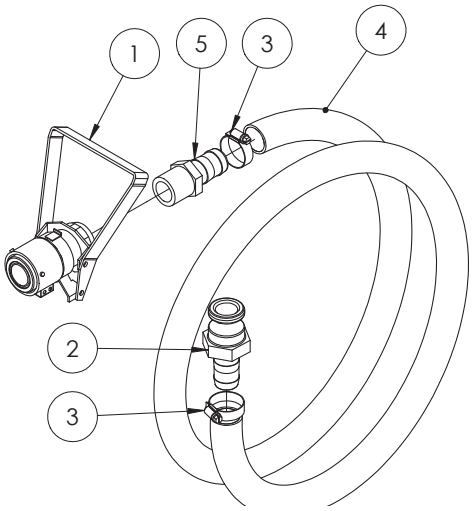

ITEM NO.	PART NUMBER	DESCRIPTION	QTY.
-	GA5020600	Enviro drum / micromatic coupling with suction hose	-
1	GA5018803	Micromatic drum valve coupling, 3 pin, Viton seals	1
	GA5018799	Seal kit, Suit micromatic / enviro drum coupling GA5018803	-
2	GA5076011	Cam lever, 1" male coupling x 1" hose barb, Banjo	1
3	GA5001681	Hose Clamp, 1" SS (20-32/12W)	2
4	GA2000220	Hose, Suction, PVC, 25mm, Black - cut 2840mm long	1
5	GA5077718	Hose barb, Straight, 1" male thread x 1" hose	1

Chapter 20

ENGINE & TRANSMISSION

Cummins Engine / Allison Transmission

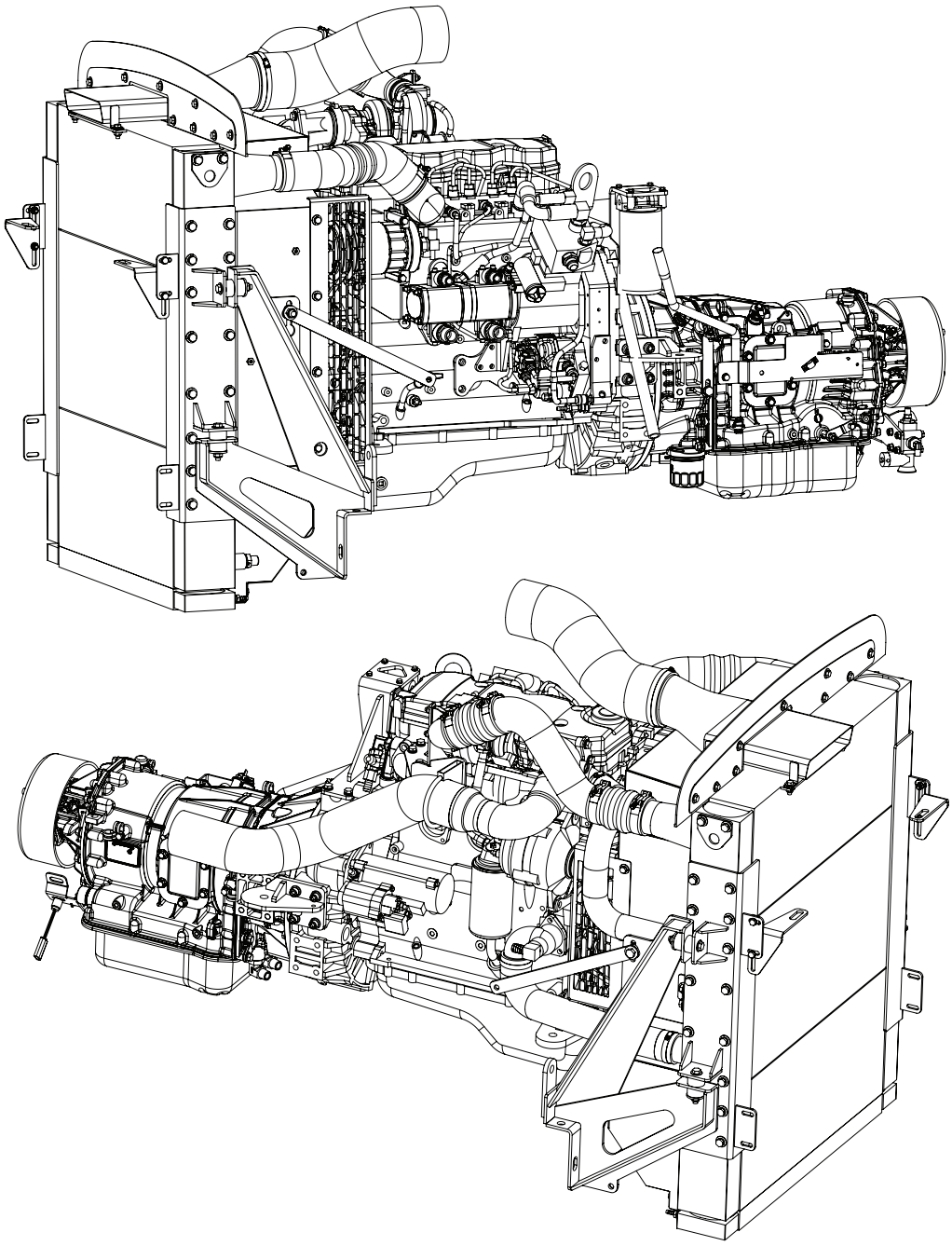

Allison Transmission

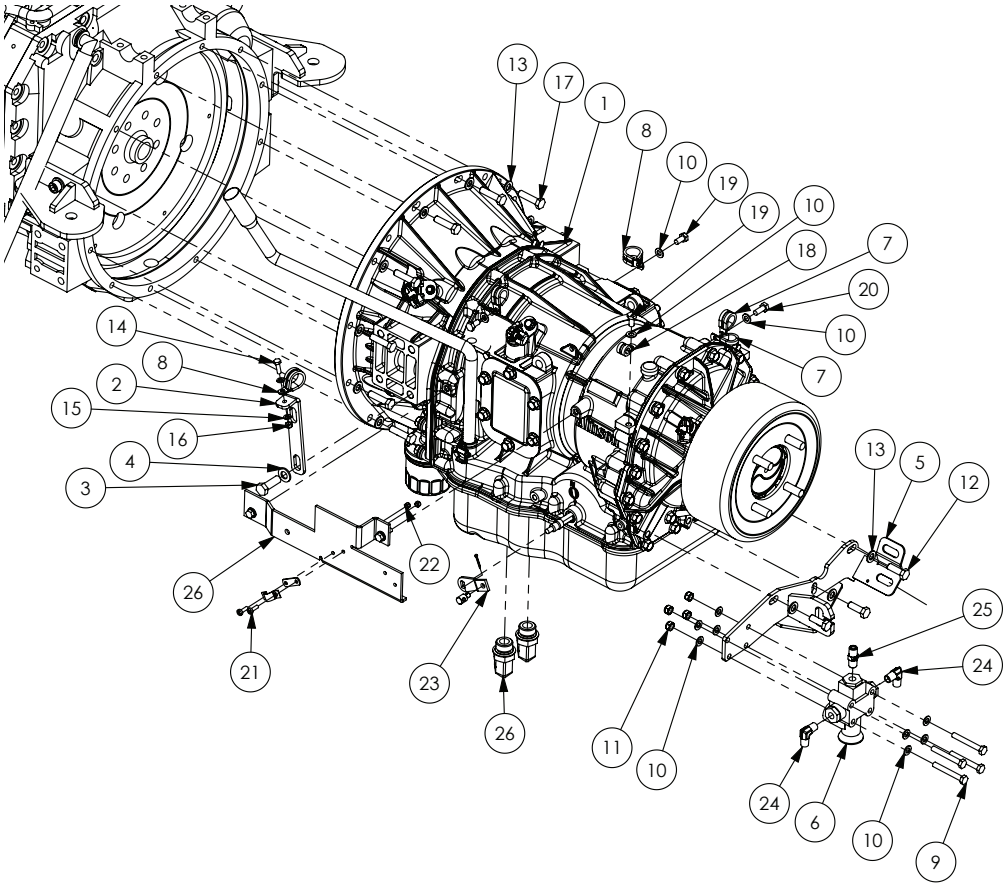

ALLISON TRANSMISSION SERVICE PARTS

PART NUMBER	DESCRIPTION
GA5068650	Pad Assembly, Park Brake, Allison 2500 Transmission
GA5048280	Filter , Allison - Spin On
GA5048285	Filter , Allison - Internal
GA5013769	Rear main oil seal - Allison transmission
GA2700002	Brake Drum, Park Brake, Allison 2500 Transmission

ITEM NO.	PART NUMBER	DESCRIPTION	QTY.
1	GA5071490	Transmission, 2500 P TC211 kit, Allison, G3 G4 Series	1
2	GA4503735	Bracket, Trans dip stick SP 2011	1
3	GA5000311	Bolt M12 x 35	1
4	GA5000577	Washer 12mm Flat SS HD	1
5	GA4658075	Handbrake cable mount for 2000 series	1
6	GA5010868	Ride height leveling valve 1/4' (includes lever arms)	1
7	GA5049825	21mm Rubber Lined Hose Clamp	3
8	GA5049830	Clamp P 35mm 56487	2
9	GA5011489	Bolt M8 x 60 ZP	4
10	GA5003643	Washer 8mm Flat SS HD	12

Continued over page

Allison Transmission

ITEM NO.	PART NUMBER	DESCRIPTION	QTY.
11	GA5052590	Nut M8 Nyloc SS 316	4
12	GA5065455	Bolt M10 x 30 ZP GR8.8	3
13	GA5000117	Washer 10mm Flat SS HD	15
14	GA5004065	Bolt M6 x 20	1
15	GA5004437	Washer 6mm Flat SS	2
16	GA5048115	Nut M6 nyloc	1
17	GA5006071	Bolt M10 x 40 ZP GR10.9	12
18	GA5050120	10mm Rubber Lined Hose Clamp	1
19	GA5004695	Bolt M8 x 16mm	3
20	GA5004085	Bolt M8 x 20mm	1
21	GA5003977	Bolt M5 x 16mm Pan head Screw	2
22	GA5003975	Nut M5 Nyloc SS	2
23	GA5007369	Conn Shift Kit	1
24	GA3500258	Hydraulic coupling, Elbow, 90 degree, 1/4” BSPT male x 1/4” BSPT male	2
25	GA3500218	Hydraulic adaptor, Nipple, 1/4” BSP x 1/4” BSP	1
26	GA3500351	Hydraulic adaptor, 90 Degree Elbow 1/2” -1 1/16” JIC	2

Air Governor

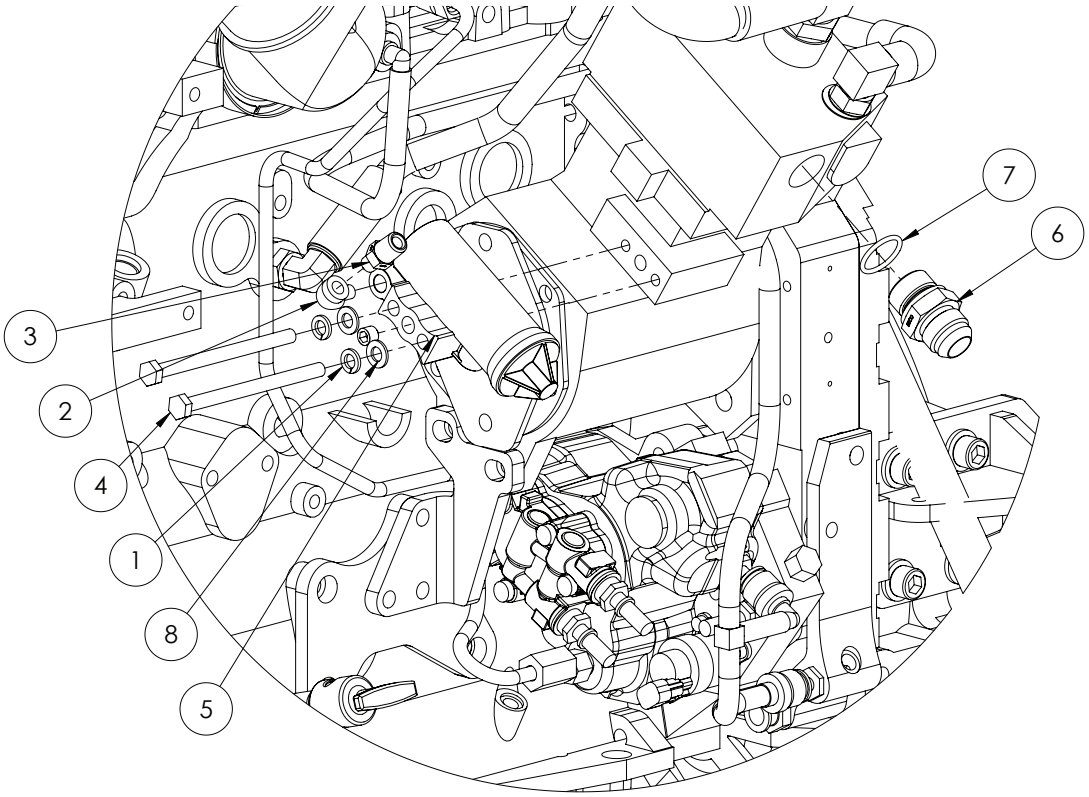

ITEM NO.	PART NUMBER	DESCRIPTION	QTY.
1	GA5004919	Washer 8mm Spring SS	2
2	GA3500208	Hydraulic adaptor, Elbow, 90 degree, 1/8” BSP male x 1/8” BSP female	1
3	GA3500217	Hydraulic adaptor, Nipple, 1/4” BSP x 1/8” BSP	1
4	GA5004933	Bolt M8 x 110mm ZP GR8.8	2
5	GA5007623	Cummins - Air Governor	1
6	GA5077883	Hydraulic adaptor, Nipple,1 1/16" JIC thread x M27 x 2.0P thread	1
7	GA5078122	3/4" BSPP O-Ring	1
8	GA5003643	Washer 8mm Flat HD SS	2

Air Cleaner

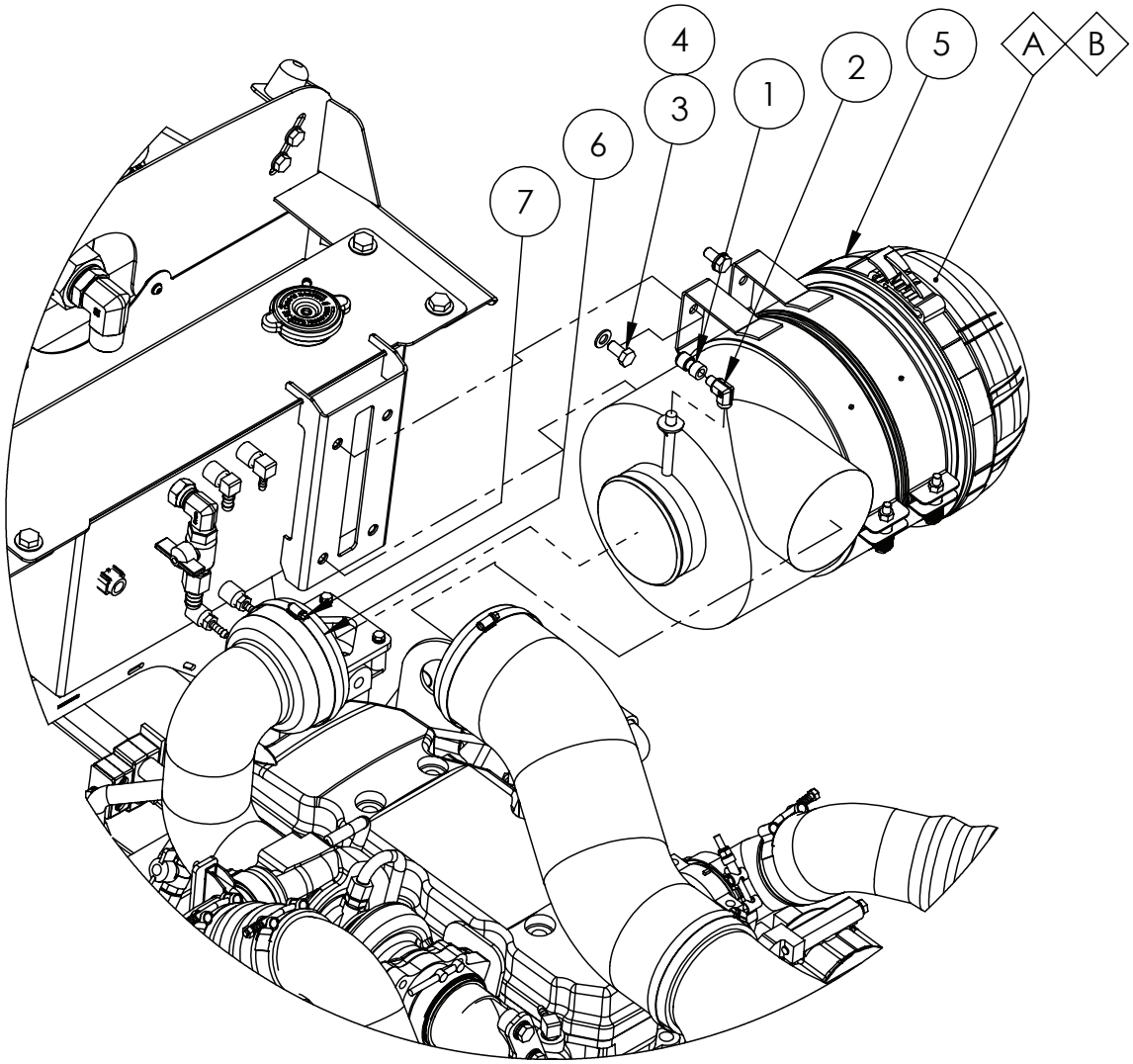

ITEM NO.	PART NUMBER	DESCRIPTION	QTY.
A	GA5071700	Filter, Air Cleaner Engine Primary Large AF26120, G3 G4 Series	1
B	GA5071705	Filter, Air Cleaner Engine Secondary Small AF26121, G3 G4 Series	1
1	GA5070450	Female Adaptor Push In 6mm x 1/8 bsp	1
2	GA3500208	Hydraulic Adaptor, Elbow, 90 degree, 1/8” bspt male x 1/8” bspt female	1
3	GA5006113	Set Screw M10 x 20 gr8.8 Zp	4
4	GA5000117	Washer 10mm flat SS HD	4
5	GA5025835	Housing, Air Filter, Fleetguard, AH19479	1
6	GA2700144	Hose, Air Filter Outlet, G4, MY14 to MY22	1
7	GA2700026	Hose Clamp, 110-135mm, G3 G4	1

Exhaust Pipe Work

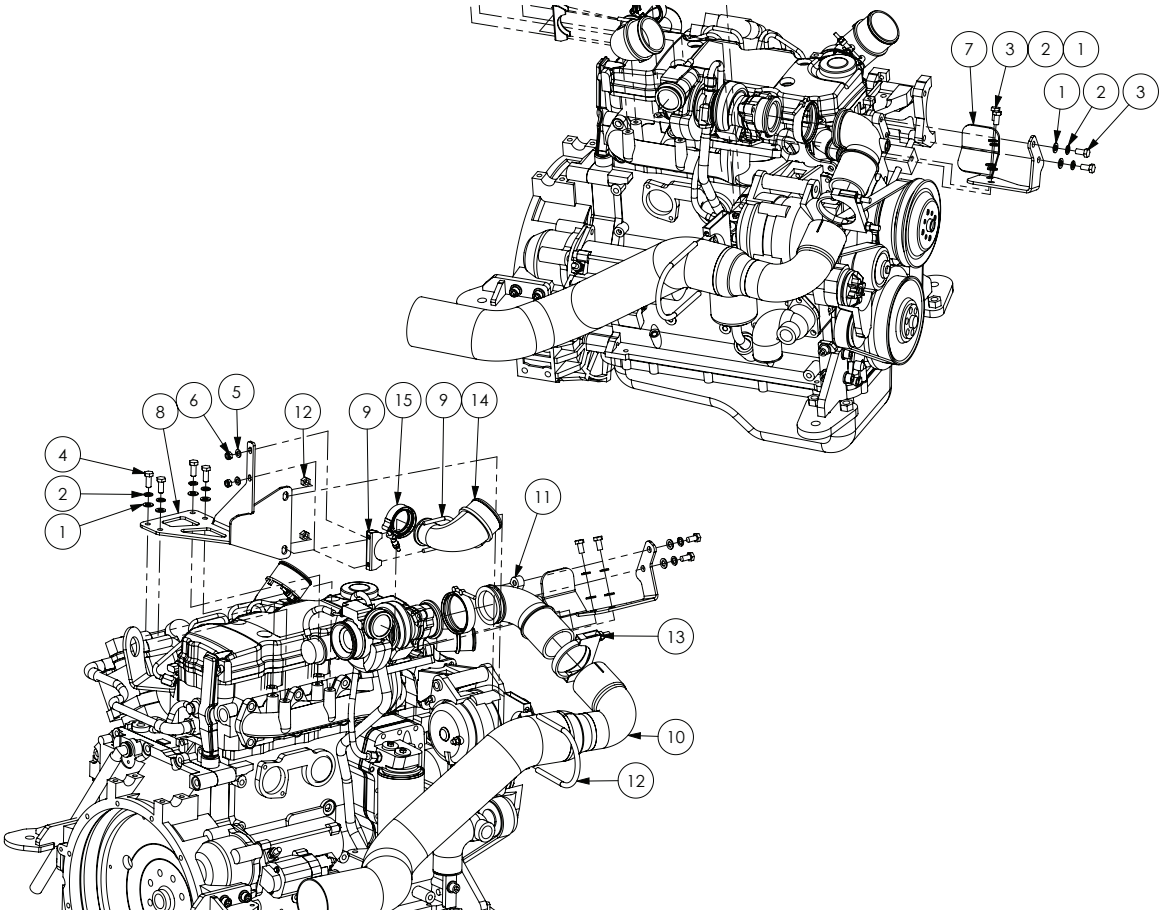

ITEM NO.	PART NUMBER	DESCRIPTION	QTY.
1	GA5000117	Washer 10mm SS Flat HD	8
2	GA5000137	Washer 10mm Spring SS	8
3	GA5006113	Bolt M10 x 20 ZP Gr8.8	4
4	GA5006161	Bolt M10 x 25 ZP Gr8.8	4
5	GA5003643	Washer 8mm Flat SS HD	2
6	GA5052590	Nut M8 Nyloc SS 316	2
7	GA4508145	Plate, Turbo Exhaust Outlet Mount and Shield QSB4.5	1
8	GA4660525	Bracket, Turbo Ancillary Support Cummins QSB4.5	1
9	GA5006705	Exhaust Clamp C8 2"	1
10	GA5071595	Exhaust Pipe Header 3" to 4"	1
11	GA5071684	Exhaust Turbo Outlet Cast 90 Degree Elbow suit Cummins QSB	1
12	GA5066215	Exhaust clamp 4 1/8"	1
13	GA5002297	Exhaust clamp - 79mm (3.125”)	1
14	-	Charge air elbow	1
15	3926702	Hose clamp - Intercooler pipes	1
-	GA5053700	Exhaust heat wrap fibreglass Black 2 x 50’	1
-	GA5055470	Cable tie, Stainless steel, 520mm 7.9mm, Heavy duty	4

Charge Air Intake

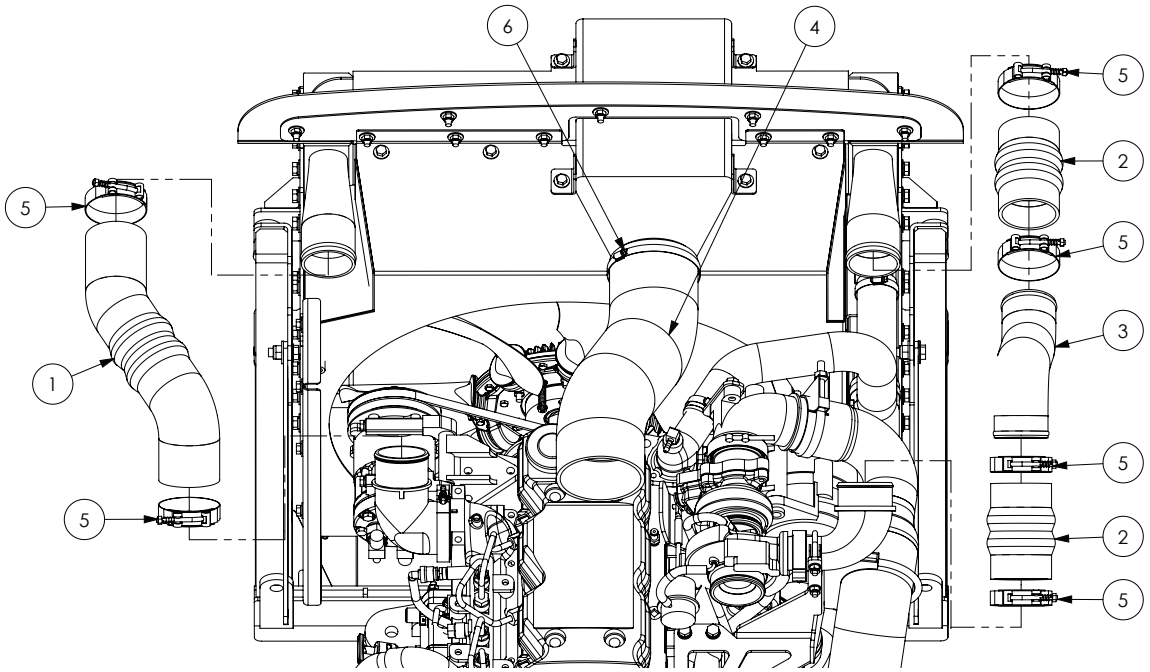

ITEM NO.	PART NUMBER	DESCRIPTION	QTY.
1	GA2700021	Hose, Diameter 76, Charge air	1
2	GA2700022	Hose, Hump, 3 Ring, Diameter 89 x 160mm	1
3	GA2700023	Pipe, Charge air, Diameter 76	1
4	GA2700024	Hose, Air filter	1
5	GA2700025	Hose clamp, Constant tension, 82-90mm	6
6	GA2700026	Hose clamp, 110-135mm	1

Hydraulic Pump Mounting 22/22cc

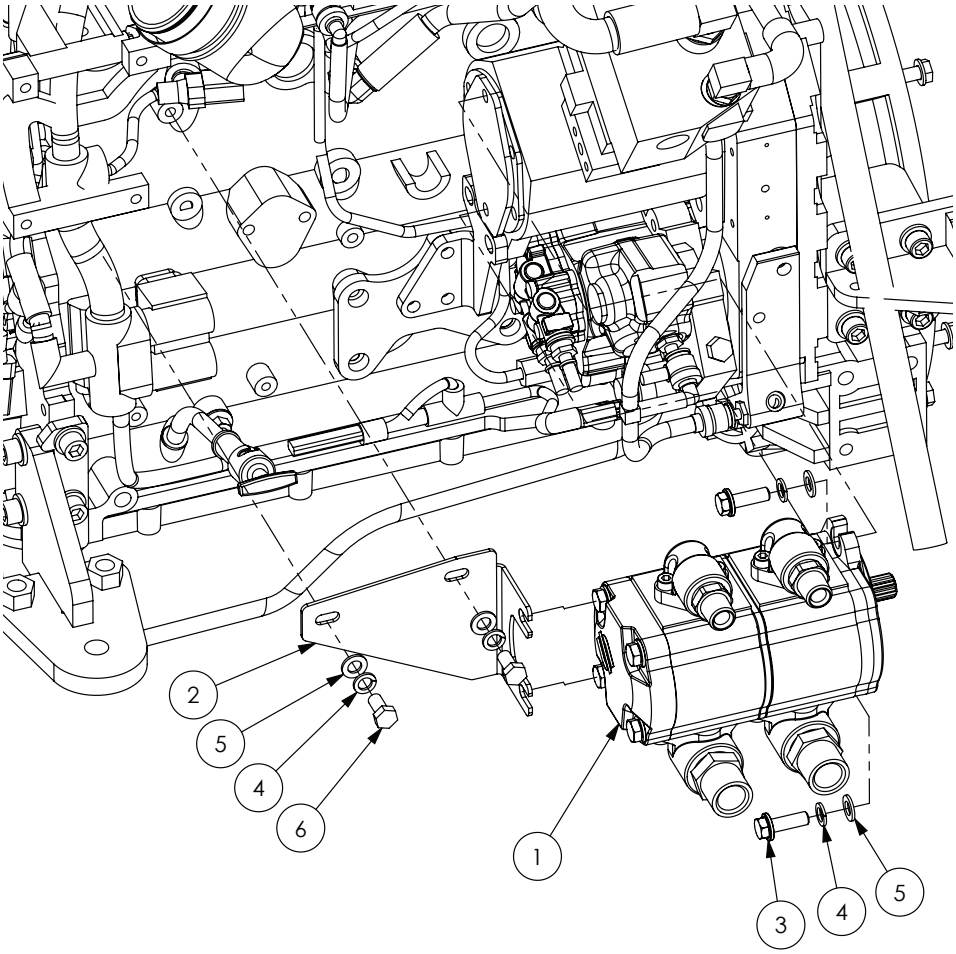

ITEM NO.	PART NUMBER	DESCRIPTION	QTY.
1	GA3500055	Pump, Hydraulic, 22 + 22 cc, 11 tooth spline, Including port adaptors	1
2	GA4508361	Bracket, Hydraulic Gear Pump Support, 22cc and 22cc Salami	1
3	GA5068655	Bolt M10 x 30, Flange head, 1.5mm Pitch, Gr12.9, Black	2
4	GA5000137	Washer 10mm Spring SS	4
5	GA5000117	Washer 10mm Flat SS HD	4
6	GA5006113	Bolt M10 x 20 ZP GR8.8	2
-	GA5071790	Coupling, Hydraulic Gear Pump to Cummins Engine 11 Tooth(Large)	1

Hydraulic Pump 22/22cc

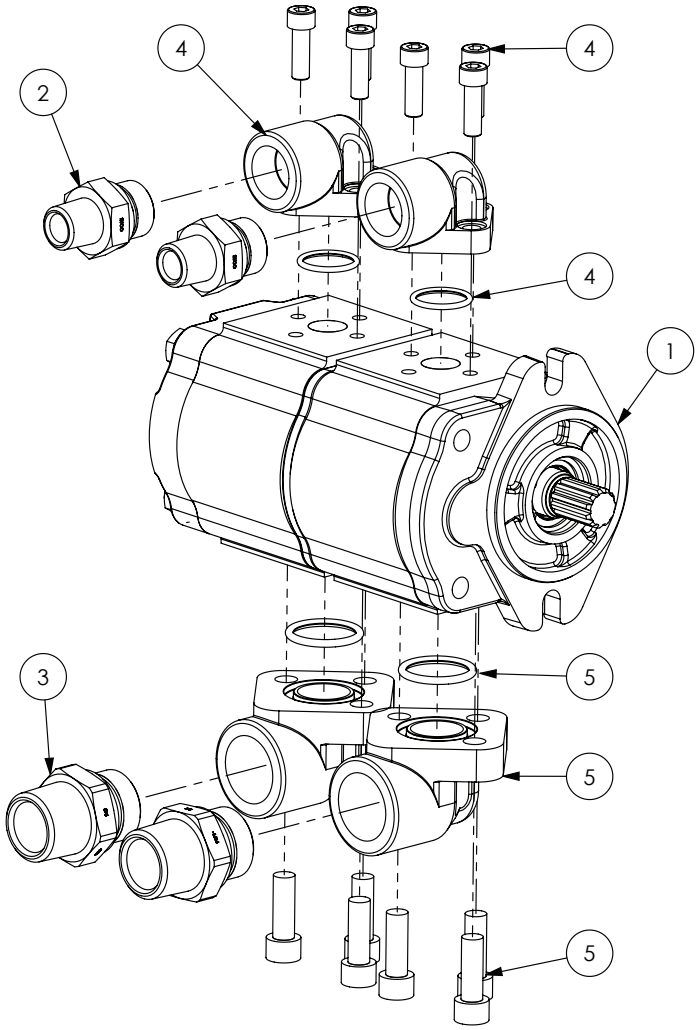

ITEM NO.	PART NUMBER	DESCRIPTION	QTY.
1	GA3500055	Pump, Hydraulic, 22 + 22 cc, Including port adaptors	1
2	GA3500312	Hydraulic adaptor, Nipple, 1/2" BSPT Male x 3/4" BSPP Male, includes o-ring	1
3	GA3500317	Hydraulic adaptor, Nipple, 1" BSPT male x 1" BSPP male, includes o-ring	2
4	GA3500064	Port Adaptor, Hydraulic, 90 degree, 3/4", suit Salami pump	2
5	GA3500065	Port Adaptor, Hydraulic, 90 degree, 1", suit Salami pump	2

Air Conditioner Compressor & Belts

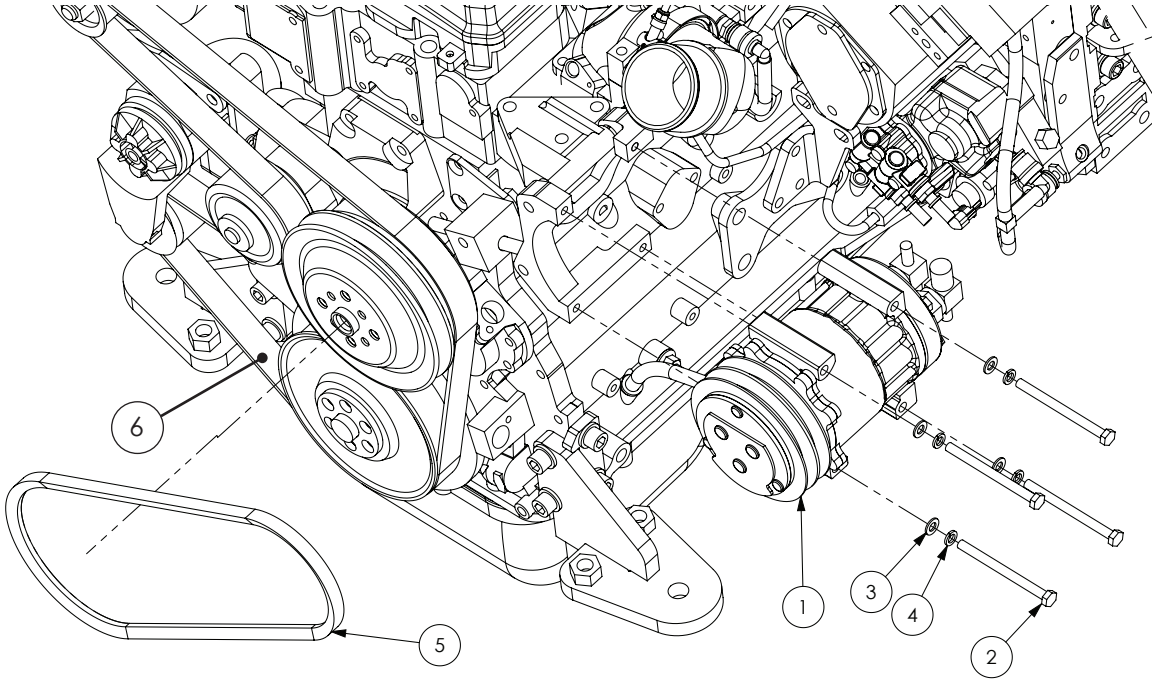

ITEM NO.	PART NUMBER	DESCRIPTION	QTY.
1	GA5071640	AC Compressor Sanden U4626	1
2	GA5004681	Bolt, M8 x 100mm ZP GR8.8	4
3	GA5003643	Washer 8mm Flat SS HD	4
4	GA5004919	Washer 8mm Spring SS	4
5	GA5071435	V Belt, Air Conditioner Compressor, G3 G4 Series	1
6	GA5075275	Belt, Serpentine, Water Pump Alternator, Cummins, QSB6.7L MY08 to MY14 & QSB4.5L, 8PK1725	1

Air Conditioner Condenser

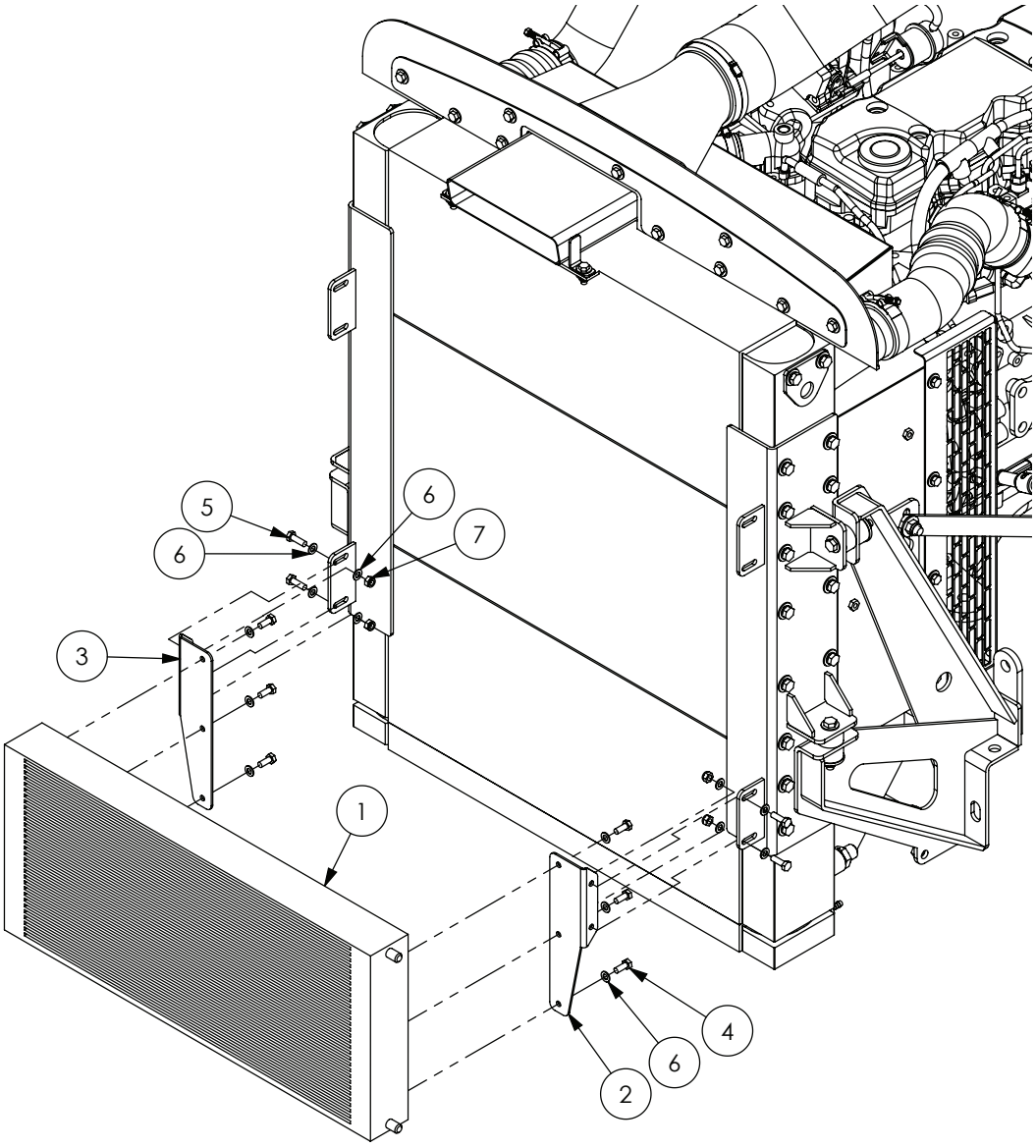

ITEM NO.	PART NUMBER	DESCRIPTION	QTY.
1	GA5007361	A/C Condenser assembly, Tube & fin, 6 row, 5/16” fittings	1
2	GA4507065	Bracket AC Condenser Left Hand	1
3	GA4507070	Bracket AC Condenser Right Hand	1
4	GA5004085	Bolt M8 x 20	6
5	GA5004711	Bolt M8 x 25	4
6	GA5003643	Washer 8mm Flat SS HD	14
7	GA5004917	Nut M8 Nyloc	4

Coolant System Plumbing

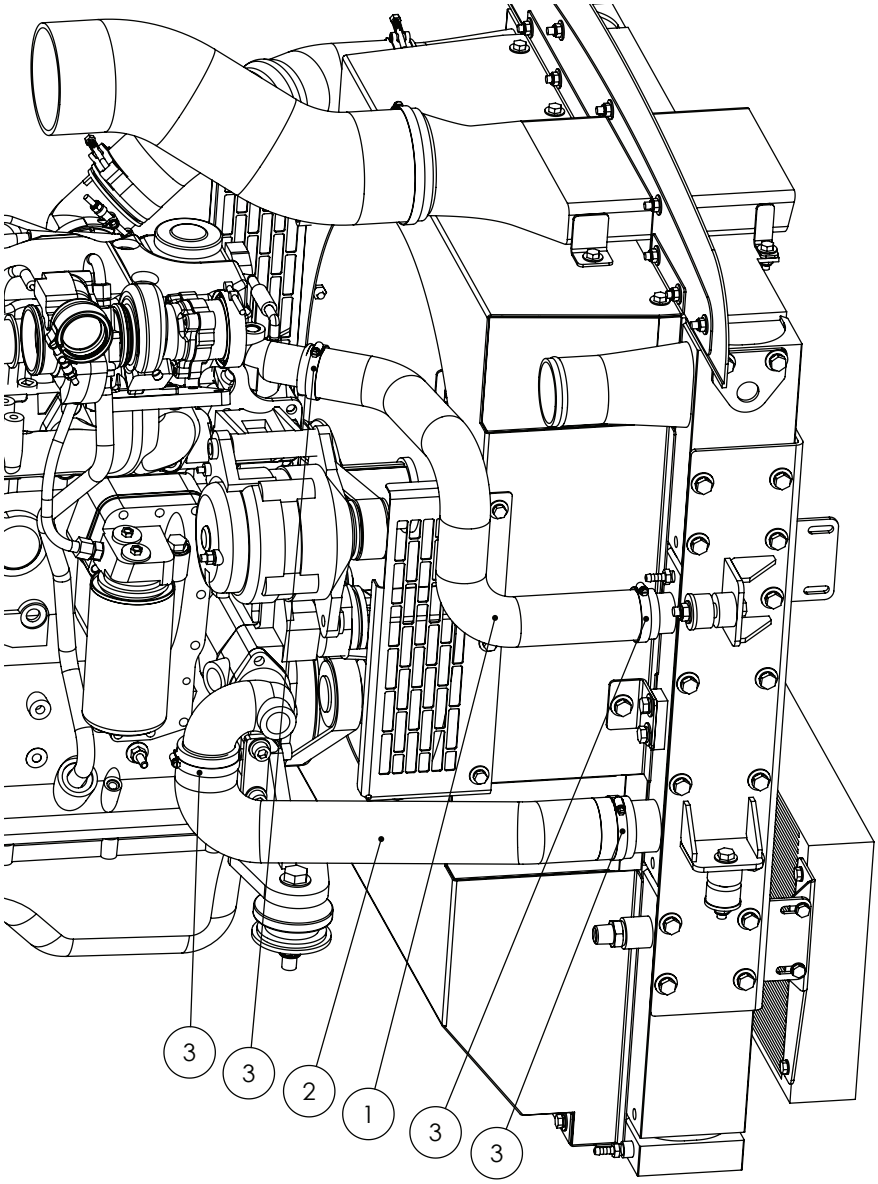

ITEM NO.	PART NUMBER	DESCRIPTION	QTY.
1	GA2700019	Radiator Hose, Diameter 45.mm	1
2	GA2700020	Radiator Hose, Diameter 58.mm	1
3	GA5016815	Hose Clamp, 50-70mm SS	4

Combi Cooler

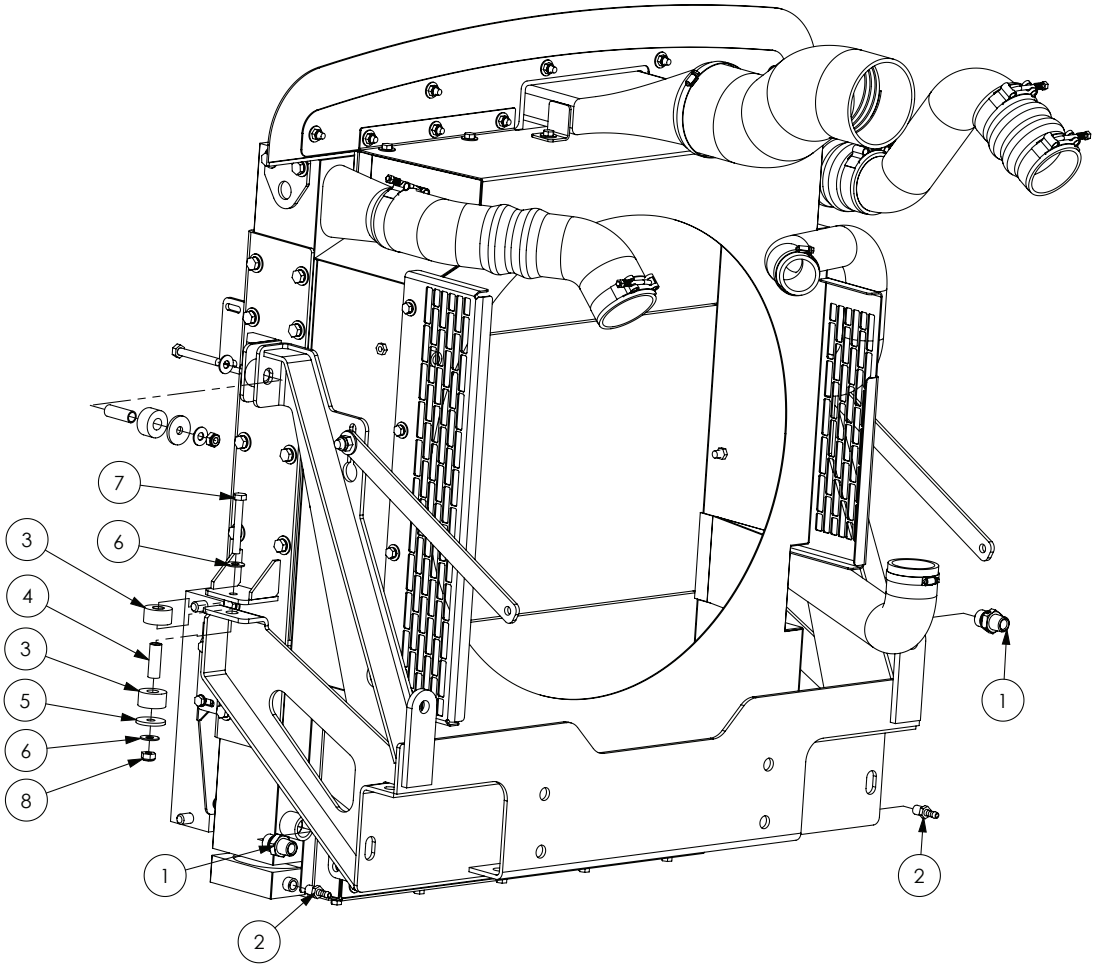

ITEM NO.	PART NUMBER	DESCRIPTION	QTY.
1	GA3500311	Hydraulic adaptor, 1/2” BSPT x 5/8” BSPP	2
2	GA5068780	Hose barb, 1/4” BSPT male x 5/16” hose, Brass	2
3	GA2700016	Bush, Isolator	8
4	GA2700017	Spacer, Tube	4
5	GA2700018	Washer, Snubber	4
6	GA5000117	Washer 10mm Flat SS HD	8
7	GA5006073	Bolt M10 x 75 ZP	4
8	GA5000141	Nut M10 Nyloc	4

Combi Cooler Mounting

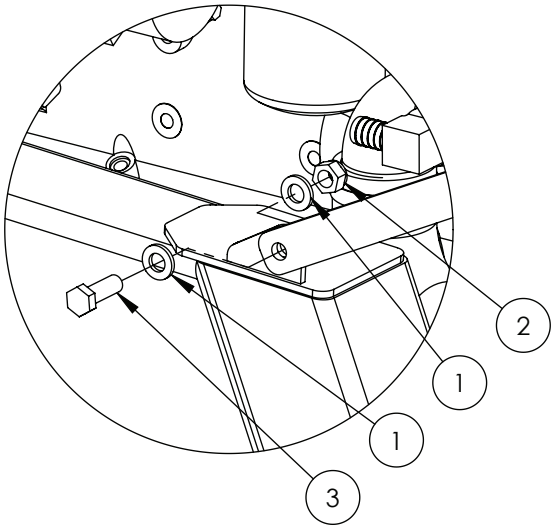

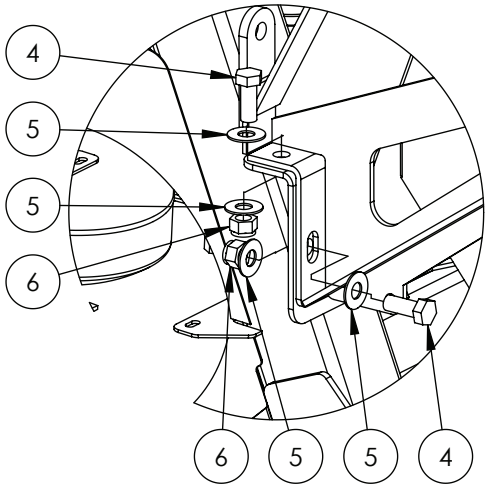

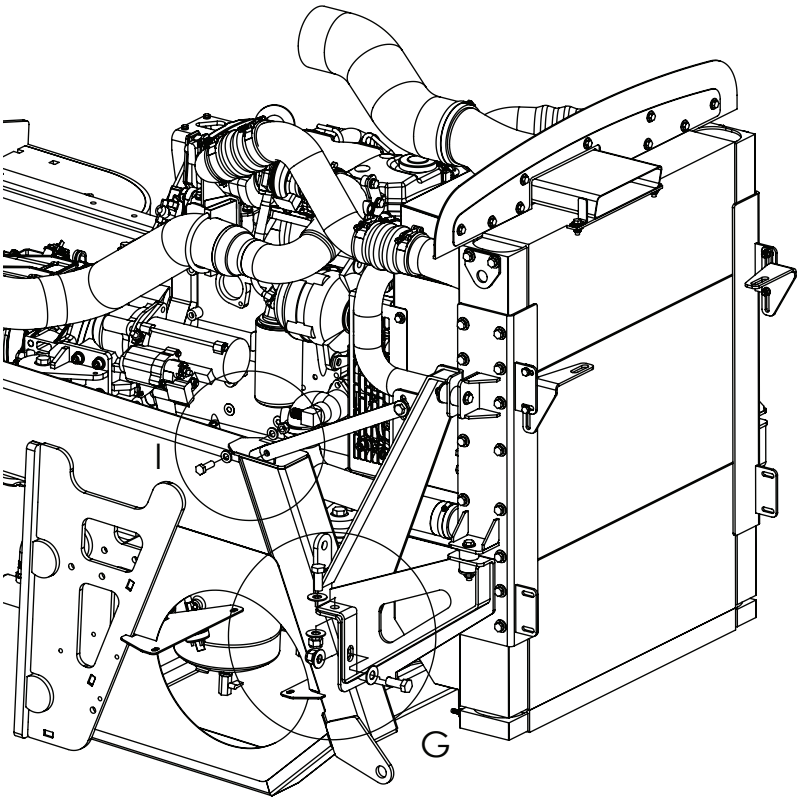

ITEM NO.	PART NUMBER	DESCRIPTION	QTY.
1	GA5000577	Washer 12mm Flat SS HD	4
2	GA5012461	Nut M12 Nyloc ZP	2
3	GA5000311	Bolt M12 x 35	2
4	GA5011287	Set screw, M16 x 40, ZP GR 8.8	4
5	GA5001043	Washer 16mm Flat SS	8
6	GA5001029	Nut M16 Nyloc	4

Combi Cooler Fan

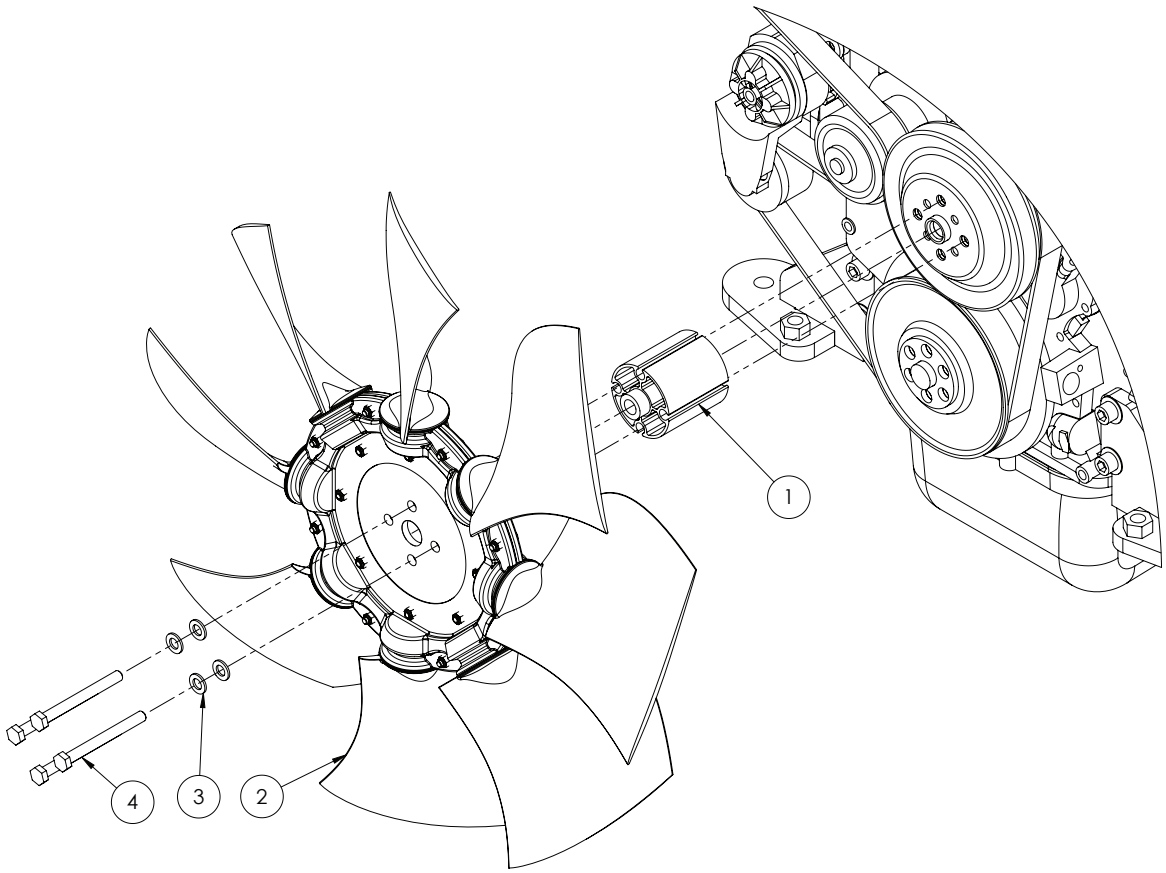

ITEM NO.	PART NUMBER	DESCRIPTION	QTY.
1	GA5071665	Spacer, Fan pilot coupling, 76mm long, aluminium, Cummins	1
2	GA2700047	Fan, suit G3 G4, QSB4.5 with 0.96:1 Ratio, Innotherm	1
3	GA5000117	Washer 10mm Flat SS HD	4
4	GA5006091	Bolt M10 x 100 GR8.8 ZP	4

Engine Mounts

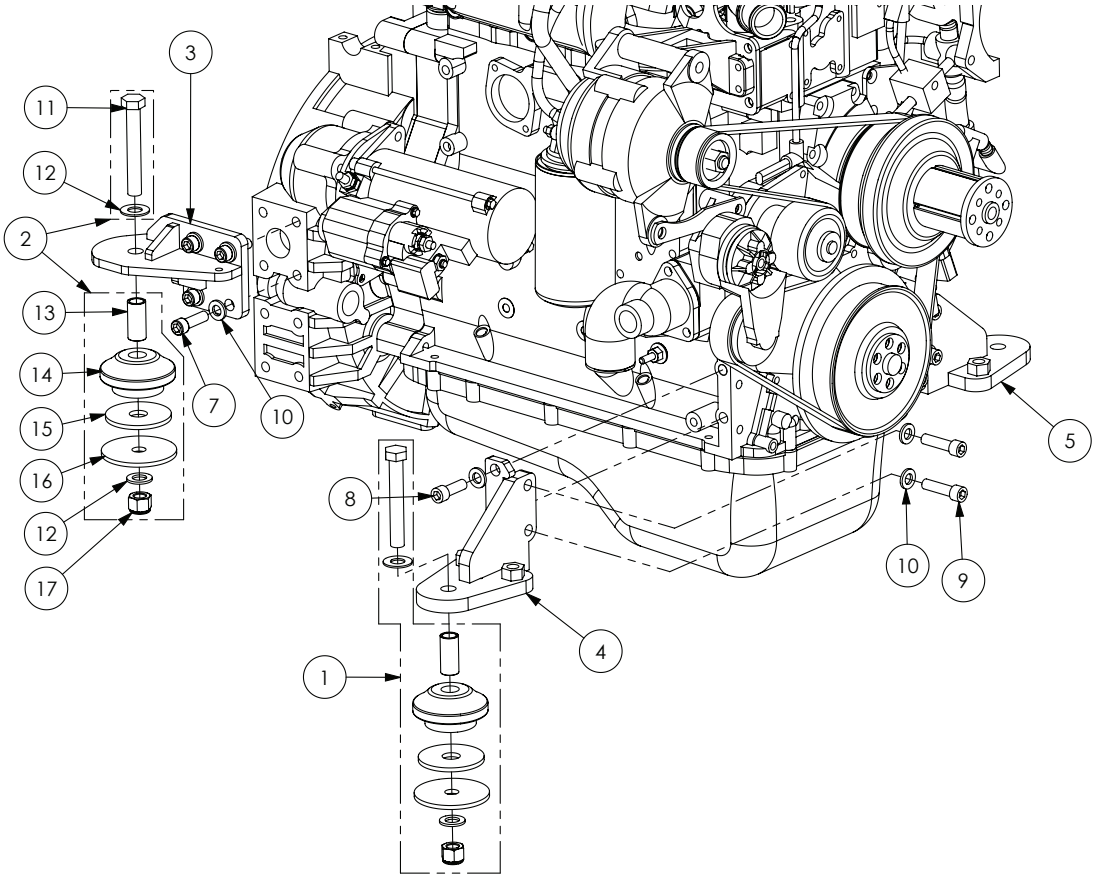

ITEM NO.	PART NUMBER	DESCRIPTION	QTY.
1	GA5055640	Isolator Kit, 60 Duro, Red, Engine 4.5L	2
2	GA5055635	Isolator Kit, 70 Duro, Black, Engine 4.5L	2
3	GA4660125	Rear Right engine mount	1
4	GA4660135	Front Right engine mount	1
5	GA4660130	Left Front engine mount	1
6	GA4660120	Left Rear engine mount (not shown)	1
7	GA5000321	SHCS M12 x 40	8
8	GA5000313	SHCS M12 x 35	4
9	GA5000325	SHCS M12 x 45 GR12.9 ZP	4
10	GA5000577	Washer 12mm Flat SS HD	16
11	GA5000855	Bolt M16 x 110 ZP GR8.8 (in isolator kit)	-
12	GA5001043	Washer 16mm Flat SS HD (in isolator kit)	-
13	-	Crush Tube (in isolator kit)	-
14	-	Isolator (in isolator kit)	-
15	-	Rebound Washer (in isolator kit)	-
16	-	Bottom Washer (in isolator kit)	-
17	GA5001029	Nut M16 Nyloc ZP (in isolator kit)	-

Heater Hose Fittings

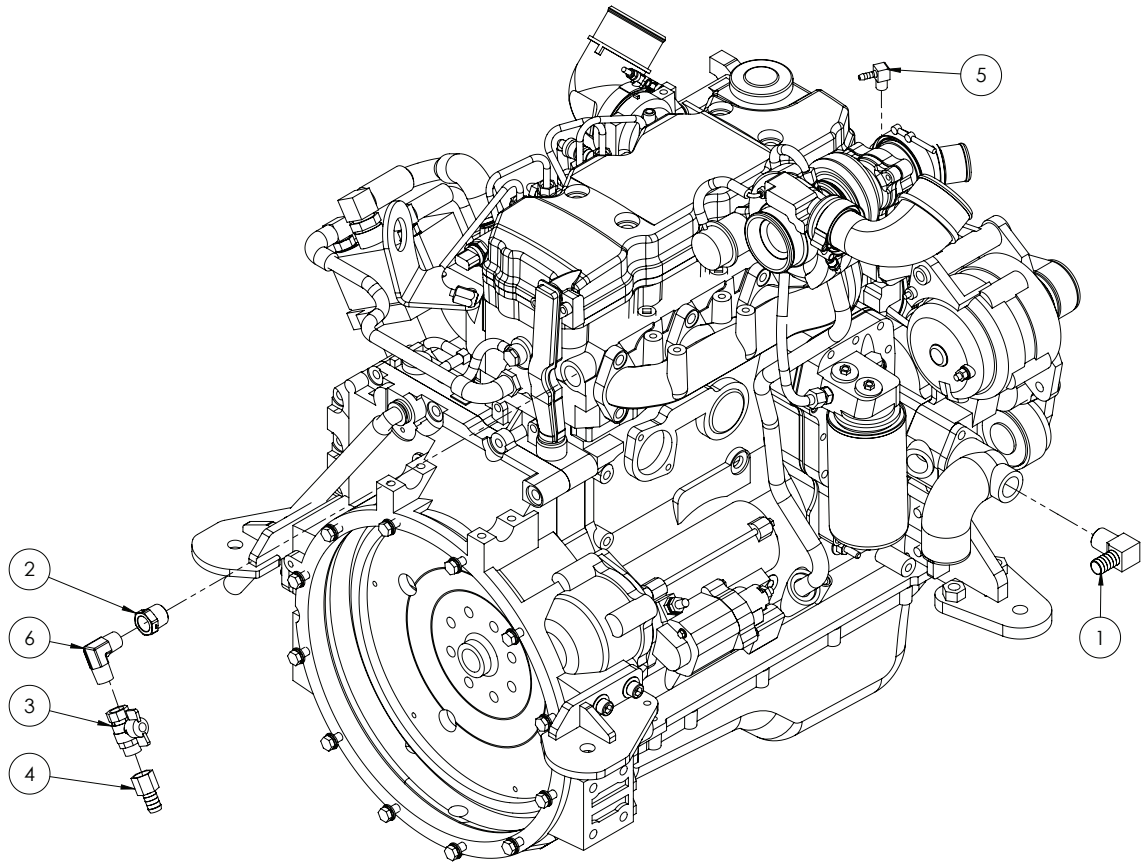

ITEM NO.	PART NUMBER	DESCRIPTION	QTY.
1	GA3500020	Elbow, 3/4” BSPT Male x 3/4” Barb, Brass	1
2	GA3500204	Hydraulic reducing bush, 3/4” BSPP x 1/2” BSPP	1
3	GA5020615	Valve, Ball, 12mm male / female thread inlet / outlet, Butterfly handle	1
4	GA4903350	Water Restrictor suit QSB engine	1
5	GA5048340	Elbow, 90 degree, 1/4” male thread x 1/4” hose, Brass	1
6	GA3500262	Hydraulic coupling, Elbow, 90 degree, 1/2” BSPT male x 1/2” BSPT male	1

Header Tank Assembly

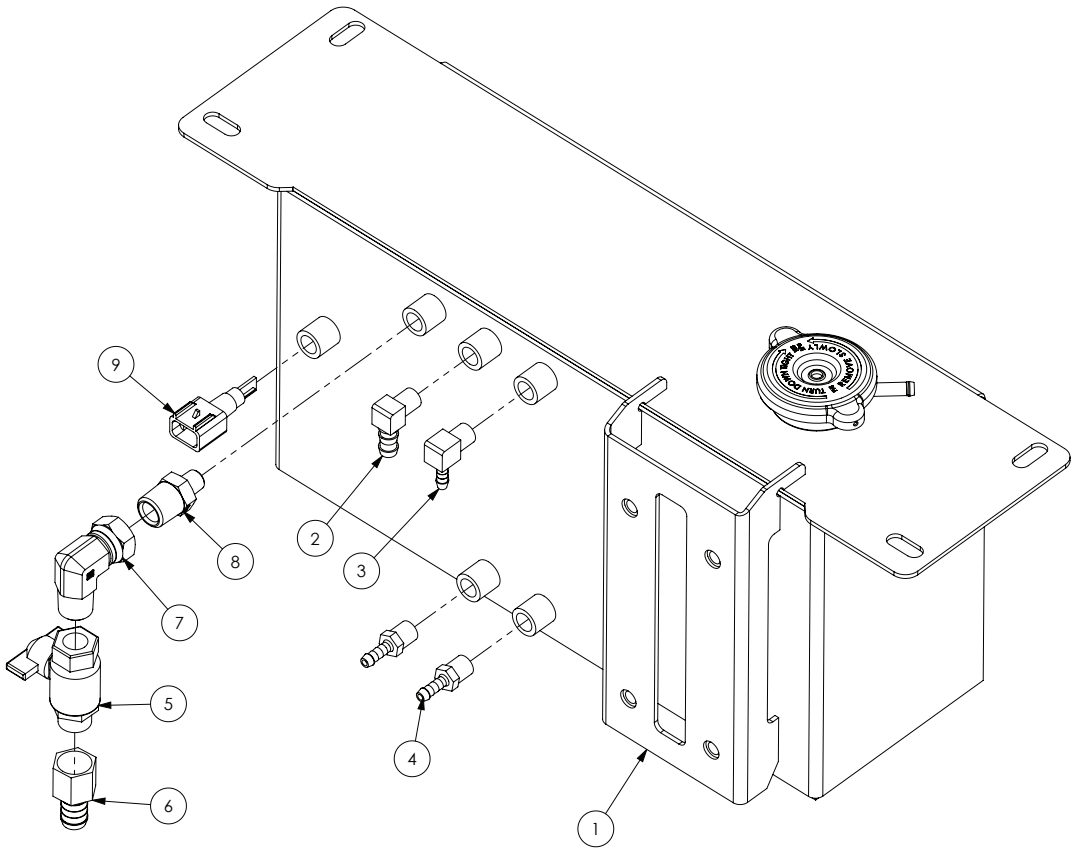

ITEM NO.	PART NUMBER	DESCRIPTION	QTY.
1	PA-130314-03	Header tank	1
2	GA5049290	Elbow brass 3/8” x 1/4”	1
3	GA5048340	1/4" Brass Elbow	1
4	GA5020540	1/4" Brass Hose Barb	2
5	GA5020615	Valve, Ball, 12mm male / female thread inlet / outlet, Butterfly handle, SS	1
6	GA5003697	Hose barb, 1/2” BSP Male x 5/8” hose, Brass	1
7	GA3500333	Hydraulic adapter, Elbow, 90 degree, 1/2” male x 1/2” female swivel	1
8	GA3500221	Hydraulic adaptor, Nipple, 1/2” BSP x 1/4” BSP	1
9	GA5066280	Sensor, Low coolant level	1

Fuel Tank

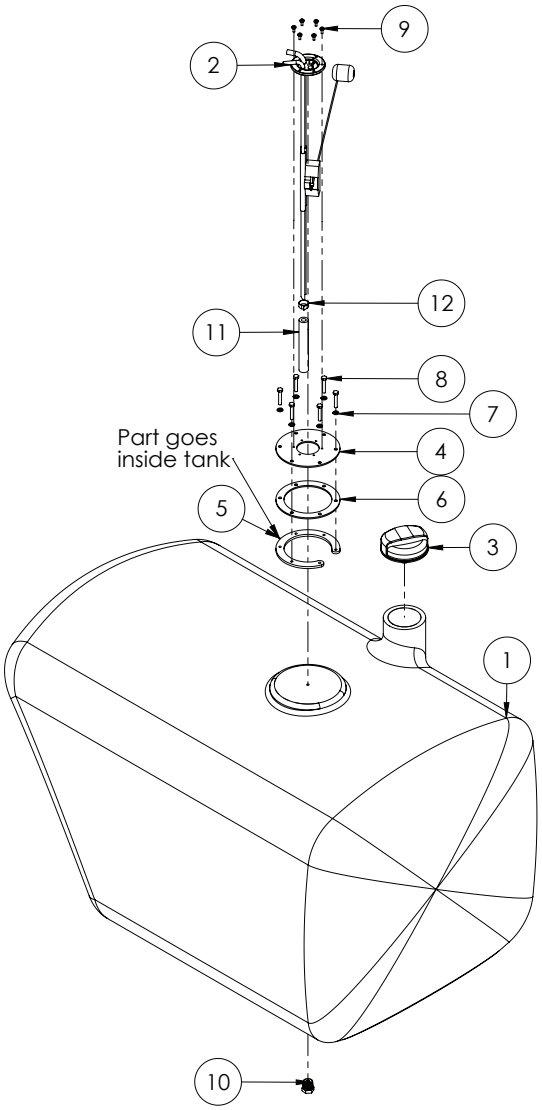

ITEM NO.	PART NUMBER	DESCRIPTION	QTY.
1	GA5071155	Tank, Fuel, 300L, G3 G4 Series	1
2	GA5070420	Fuel Sender - Cobo	1
3	GA5069066	Fuel Cap - Farma	1
4	GA4502550	Fuel Sender Mounting Plate SS	1
5	GA4502570	Fuel Sender Mount Retaining Plate	1
6	GA4502635	Fuel Sender Gasket	1
7	GA5004437	Washer 6mm Flat SS	6
8	GA5070504	Set Screw M6 x 35 ZP GR8.8	6
9	GA5011360	Bolt M4 x 10 Pan Head SS	6
10	GA5048560	1/2" Brass Magnetic Plug	1
11	GA5010211	Hose, fuel line, 3/8” ID, Black (cut to 130mm)	1
12	GA5007231	Hose clamp, Cobra type, 1/2”	1

Fuel Filters

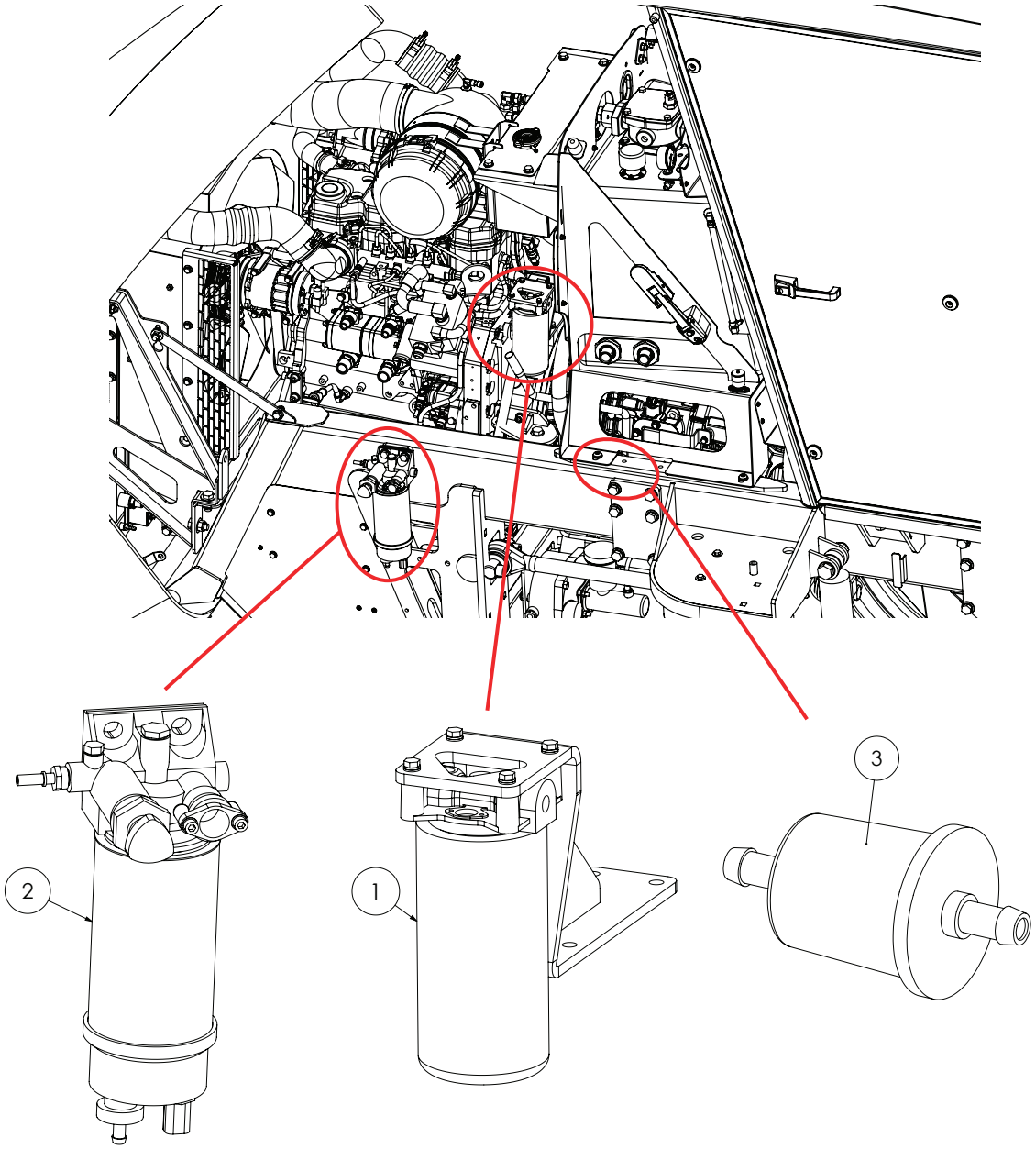

ITEM NO.	PART NUMBER	DESCRIPTION	QTY.
1	GA5051765	Filter, Fuel, Engine, Suit QSB	1
2	GA5071020	Filter, Fuel, Primary, Crop Cruiser	1
3	GA5069895	Filter, Fuel, Inline 3/8" hose barbs (Located on the left hand side of the chassis rail)	1

Fuel Filter - Primary

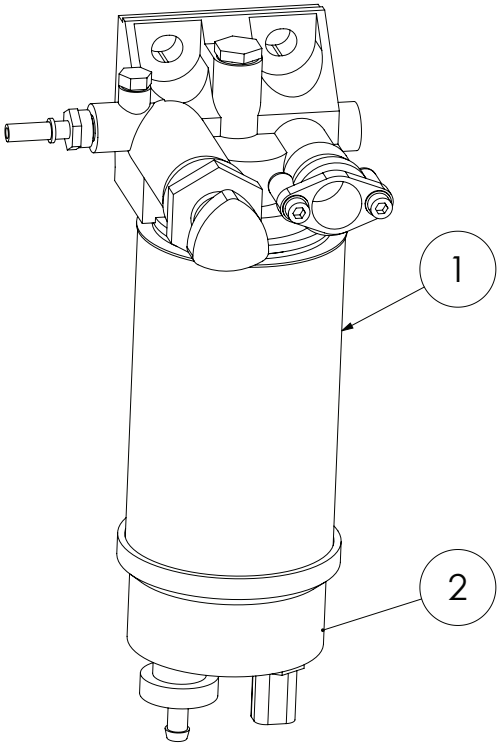

ITEM NO.	PART NUMBER	DESCRIPTION	QTY.
1	GA5051760	Cartridge, Primary fuel filter	1
2	GA5070560	Bowl, Clear glass, Primary fuel filter	1
-	GA5066275	Sensor, Water in Fuel, Suit Primary Fuel Filter With Glass Bowl	-

Fuel Filter - Secondary

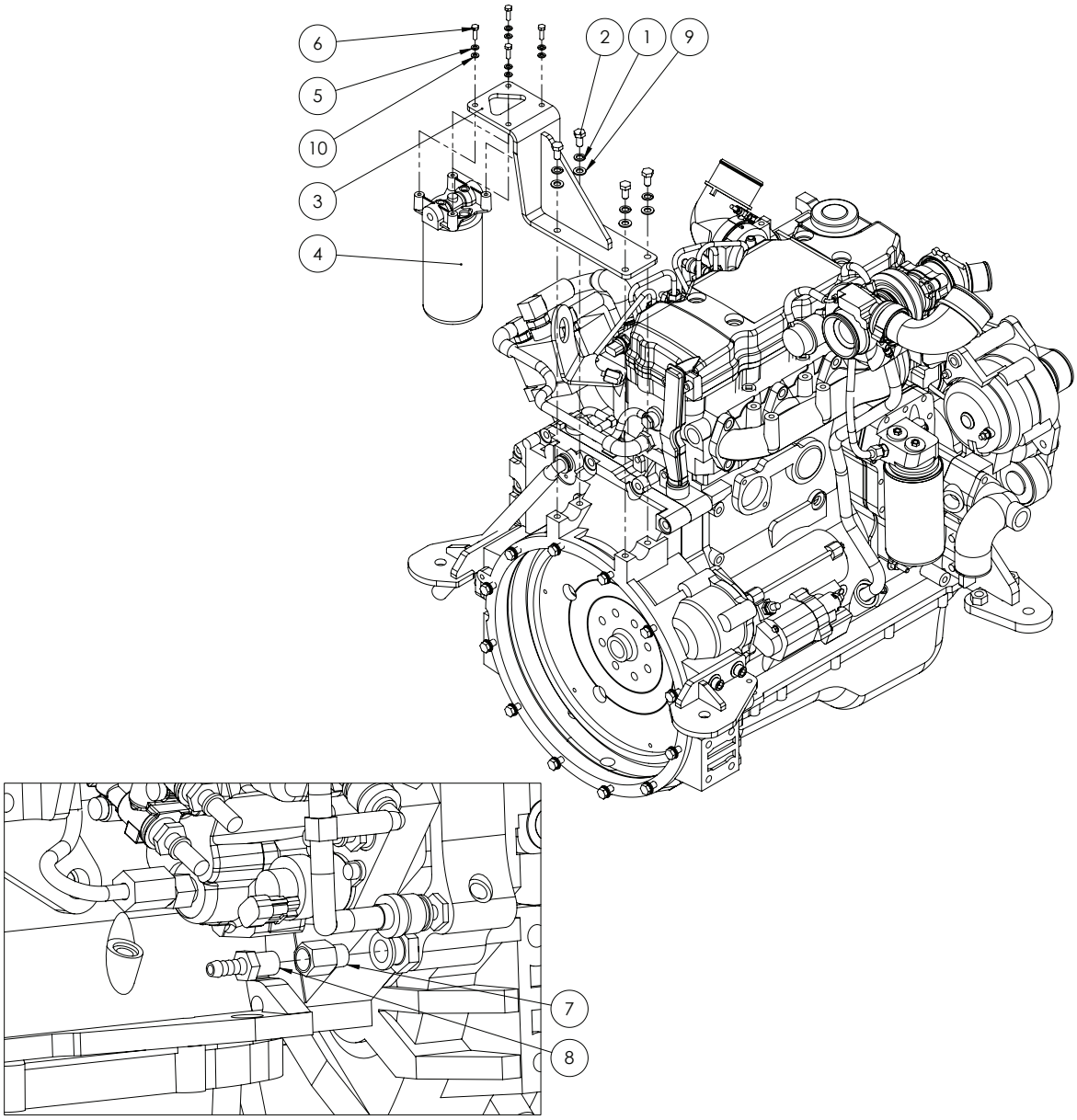

ITEM NO.	PART NUMBER	DESCRIPTION	QTY.
1	GA5000137	Washer 10mm Spring SS	4
2	GA5006113	Bolt M10 x 20 ZP Gr8.8	4
3	GA4660530	Bracket, Secondary Fuel Filter Cummins QSB4.5	1
4	GA5051765	Filter, Fuel, Engine, Suit QSB	1
5	GA5004447	Washer 6mm Spring SS	4
6	GA5004065	Bolt M6 x 20	4
7	GA2000012	Thread Adaptor Male M12 x 1.5 to Female 1/4” BSPT Brass	1
8	GA5068780	Hose barb, 1/4” BSPT male x 5/16” hose, Brass	1
9	GA5000117	Washer 10mm Flat SS HD	4
10	GA5004437	Washer 6mm Flat SS	4

Exhaust

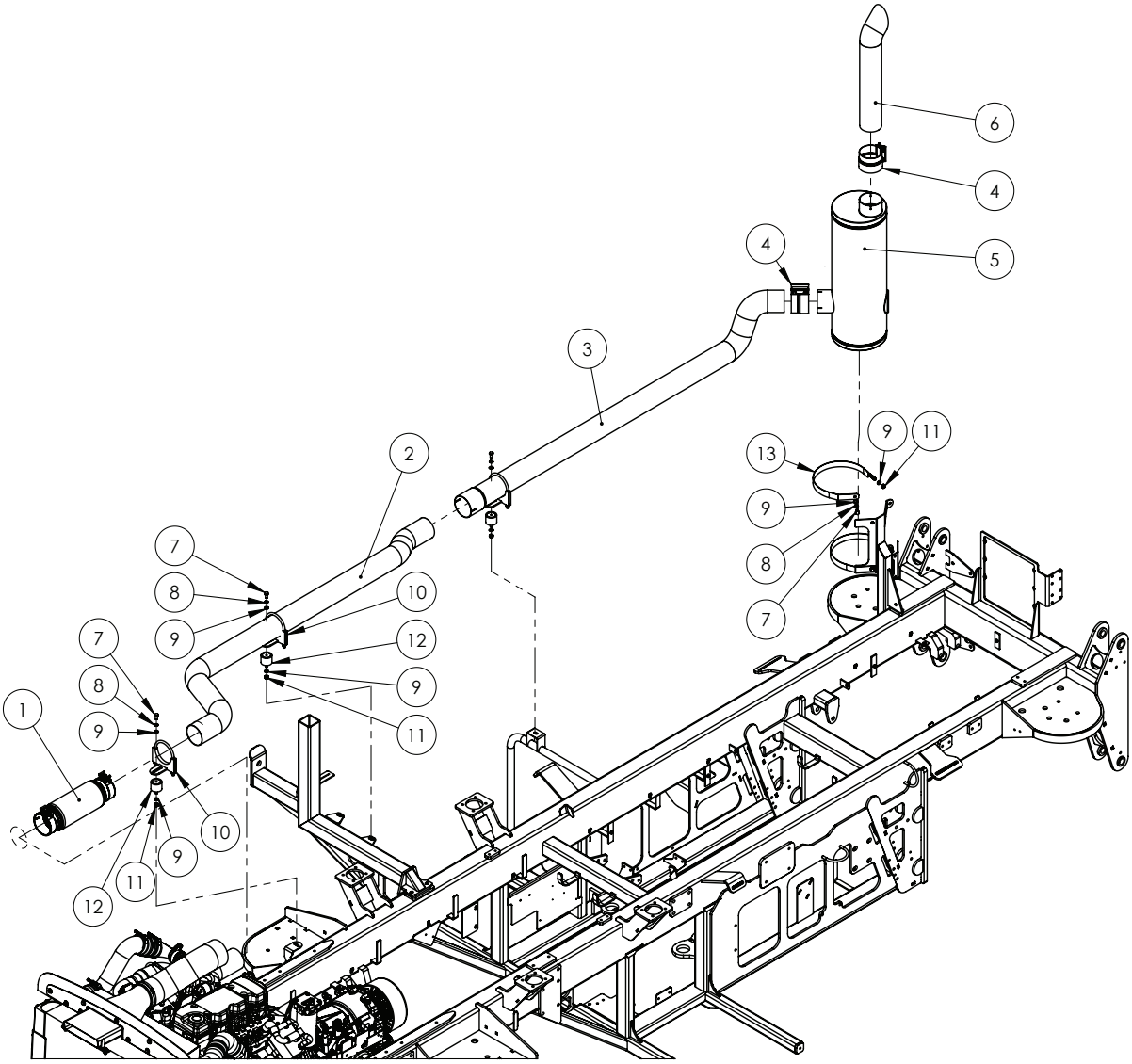

ITEM NO.	PART NUMBER	DESCRIPTION	QTY.
1	GA5068741	Exhaust Bellow, 4" ID, 16.6" long, Heavy duty, braided, with clamps	1
2	GA2700079	Exhaust Pipe, Middle Section	1
3	GA2700067	Exhaust Pipe, Rear Section	1
4	GA2700015	Exhaust Clamp, 4” Torctite	2
5	GA5071590	Muffler, Exhaust 4” 86148M	1
6	GA2700056	Exhaust Tip, 4” x 635mm	1
7	GA5006113	Bolt M10 x 20 GR8.8 ZP	5
8	GA5000137	Washer 10mm Spring SS	5
9	GA5000117	Washer 10mm Flat SS HD	10
10	GA4658835	Exhaust clamp / buffer bracket Single	4
11	GA5000141	Nut M10 Nyloc ZP	5
12	GA5014609	Rubber Buffer, 50mm Dia x 40mm Long, M10 x 25 Male x M10 Fem.	3
13	GA4661580	Mount Strap, Exhaust Muffler	2

Chapter 21

DRIVELINE & DIFFERENTIAL

Axle Front 2WD - Stub Axle

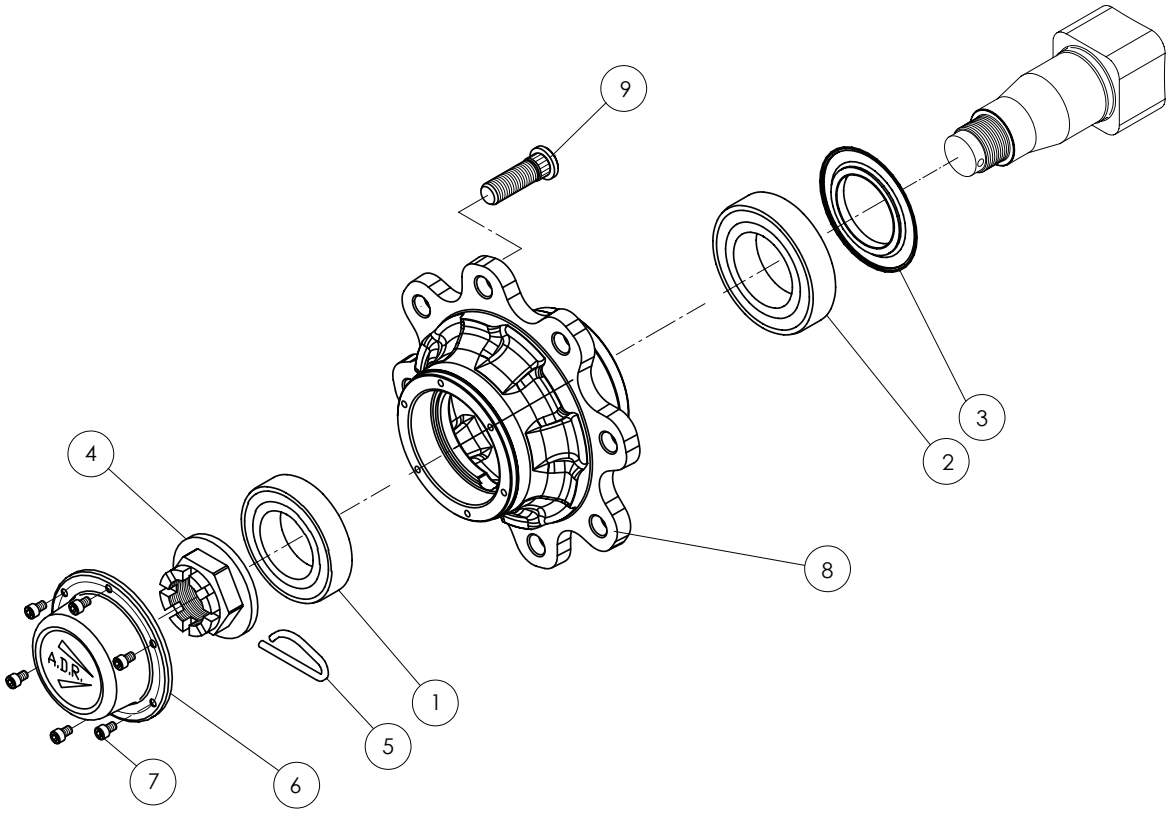

HUB ASSEMBLY

PART NUMBER	DESCRIPTION
GA5068826	ADR 90 series hub assembly

ITEM NO.	PART NUMBER	DESCRIPTION	QTY.
1	GA5052200	Bearing kit - 32213 & 32216 (Qty. 1 each p/kit)	2
2			
3	GA5066405	Oil Seal	1
4	GA5052190	Crown Nut & Spring Pin kit (Qty. 2 each p/kit)	1
5			
6	GA5052120	Cap w/Gasket kit (Qty. 1 p/kit) & SHCS M8 x 1.25P (Qty. 6 p/kit)	2
7			
8	-	Hub, 10 holes 335 PCD	2
9	GA5052205	90 Series ADR Stud Kit (Qty. 10 p/kit)	2

NOTE: Hub supplied as part of GA5068826 assembly

Axle Front 2WD - 2m

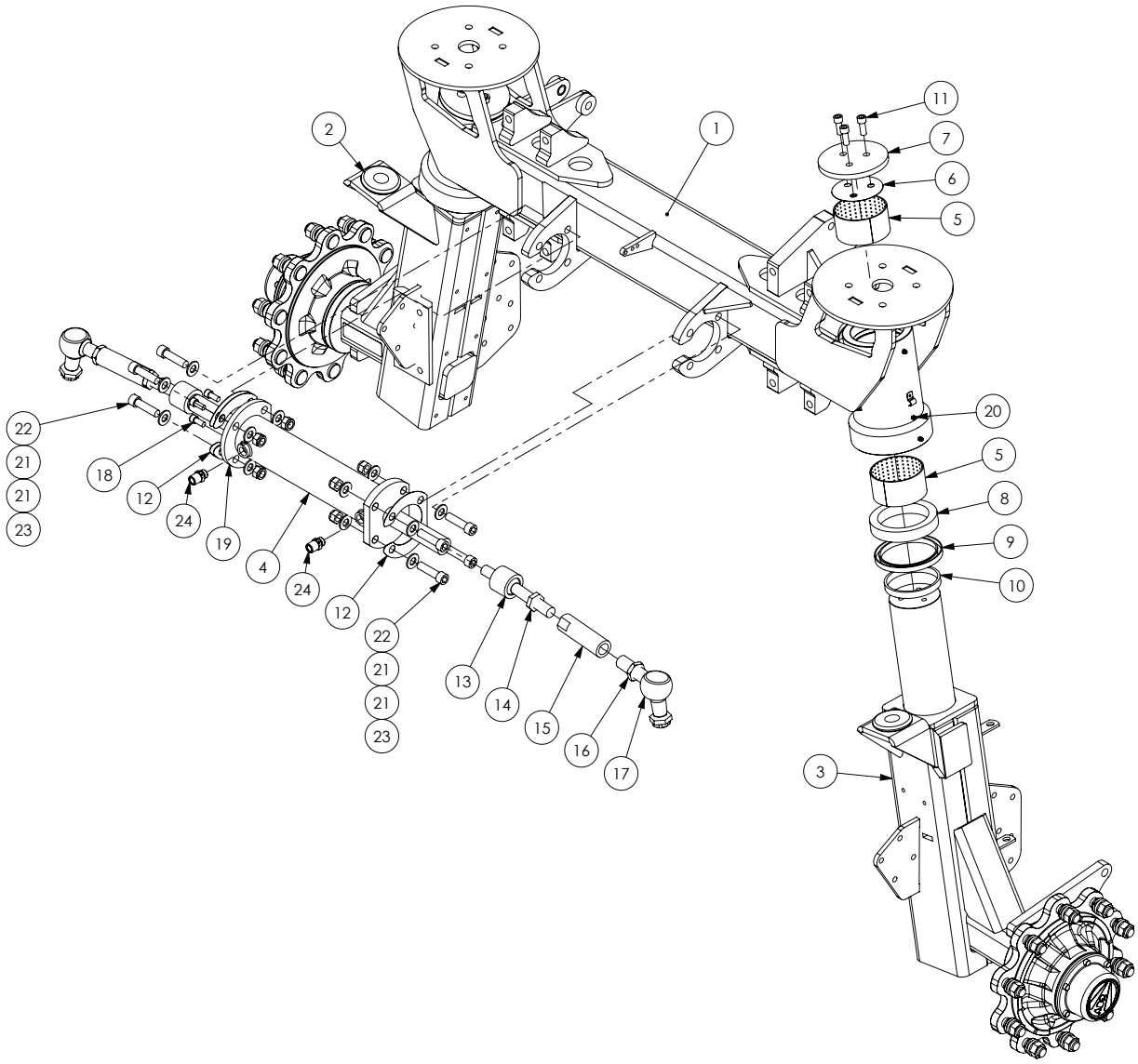

ITEM NO.	PART NUMBER	DESCRIPTION	QTY.
-	GA4550160	Steering Stop, Long, 2m with 520 Tyres	1
-	GA4550155	Steering Stop, Short, 2m with 520 Tyres	1
1	GA4660790	Axle Front 2m	1
2	GA4660070	Drop leg, Front, RH, Standard	1
	GA4660080	Dropleg, Front RH, Suit 38” Wheel	1
3	GA4660075	Drop leg, Front, LH, Standard	1
	GA4660085	Dropleg, Front LH, Suit 38” Wheel	1
4	GA5066586	Circular flanged end 3" x 7.5" stroke	1
5	GA5009454	Glacier bush, M liner with dimples, 110 ID x 60mm long	4
6	F70544A	Shim plate for 2WD front axles	2
7	2M-FA011LAS	Top steering cap	2

Continued over page

Axle Front 2WD - 2m

ITEM NO.	PART NUMBER	DESCRIPTION	QTY.
8	GA5048245	Bearing, Ball thrust bearing, 110 ID x 145 OD x 25 mm thick	2
9	GA5048635	Oil Seal 145 x 120 x 12mm	2
10	2MFA004-IGR	Thrust ring, suit Crop Cruiser axle	2
11	GA5000307	SHCS M12 x 30 GR12.9 ZP	6
12	GA4514640	Steering ram shim plate	3
13	GA5065045	Ball joint, Inline, M24 x 1.5 pitch x M22 x 1.5 pitch	2
14	GA4553195	Nut, M28 x 1.5, 20mm Wide, ZP	2
15	GA4572156	Tie rod, For 2m standard front axle, M24 to M28 x 130 mm long	2
16	GA4553195	Nut, M28 x 1.5, 20mm Wide, ZP	2
17	GA5065041	Ball joint, Right angle, M27 x 1.5 thread	2
18	GA5070250	SHCS 7/16" UNF x 1" GR12.9 ZP	4
19	GA4514635	Flange plate for Steering ram	1
20	GA5012203	Grease Nipple 1/4" UNF Short	6
21	GA5001043	Washer 16mm Flat SS HD	16
22	GA5048680	SHCS M16 x 60 GR12.9 ZP	8
23	GA5001029	Nut M16 Nyloc ZP	8
24	GA3500363	Hydraulic adaptor, Nipple, 1/2” BSPT male x 3/4” UNO male oring	2

Axle Front 2WD - 3m

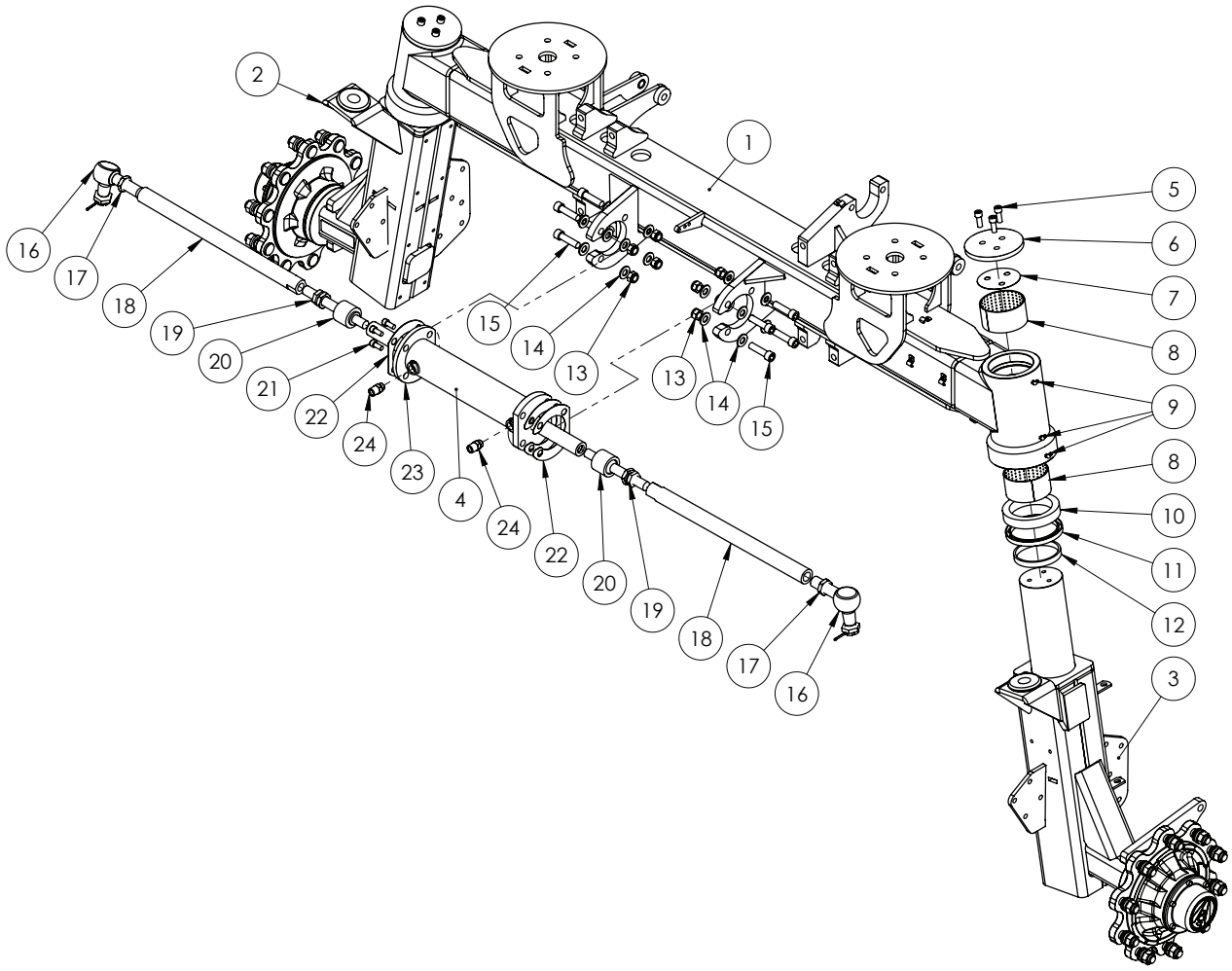

SEAL KIT

PART NUMBER	DESCRIPTION
GA5050215	Steering Cylinder Seal Kit

ITEM NO.	PART NUMBER	DESCRIPTION	QTY.
1	GA4660795	Axle Housing, Front 3m	1
2	GA4660070	Drop leg, Front, RH, Standard	1
	GA4660080	Dropleg, Front RH, Suit 38” Wheel	1
3	GA4660075	Drop leg, Front, LH, Standard	1
	GA4660085	Dropleg, Front LH, Suit 38” Wheel	1
4	GA5066586	Circular flanged end 3" x 7.5" stroke	1
5	GA5000307	SHCS M12 x 30 GR12.9 ZP	6
6	2M-FA011LAS	King pin retaining cap, bolt on	2

Continued over page

Axle Front 2WD - 3m

ITEM NO.	PART NUMBER	DESCRIPTION	QTY.
7	F70544A	Shim, 0.5mm thick, Suit Crop Cruiser king pin cap	2
8	GA5009454	Glacier bush, M liner with dimples, 110 ID x 60 mm long	4
9	GA5009637	Grease nipple, Elbow, 90 degree, 1/4" UNF male	7
10	GA5048245	Bearing, Ball thrust bearing, 110 ID x 145 OD x 25 mm thick	2
11	GA5048635	Oil seal, 120 ID x 145 OD x 12 mm thick	2
12	2MFA004-IGR	Thrust ring, suit Crop Cruiser axle	2
13	GA5001029	Nut M16 Nyloc ZP	8
14	GA5001043	Washer 16mm Flat SS HD	16
15	GA5048680	SHCS M16 x 60 GR12.9 ZP	8
16	GA5065041	Ball joint, Right angle, M28 x 1.5 thread	2
17	GA4553195	Nut, M28 x 1.5, 20mm Wide, ZP	2
18	GA4552385	Tie Rod, 3m 2WD	2
19	GA4553195	Nut, M28 x 1.5, 20mm Wide, ZP	2
20	GA5065045	Ball joint, Inline, M24 x 1.5 pitch x M22 x 1.5 pitch	2
21	GA5070250	SHCS 7/16" UNF x 1" GR12.9 ZP	4
22	GA4514640	Steering ram shim plate	3
23	GA4514635	Flange plate for Steering ram	1
24	GA3500363	Hydraulic adaptor, Nipple, 1/2” BSPT male x 3/4” UNO male oring	2

Axle Front 2WD - Adjustable 2-3m

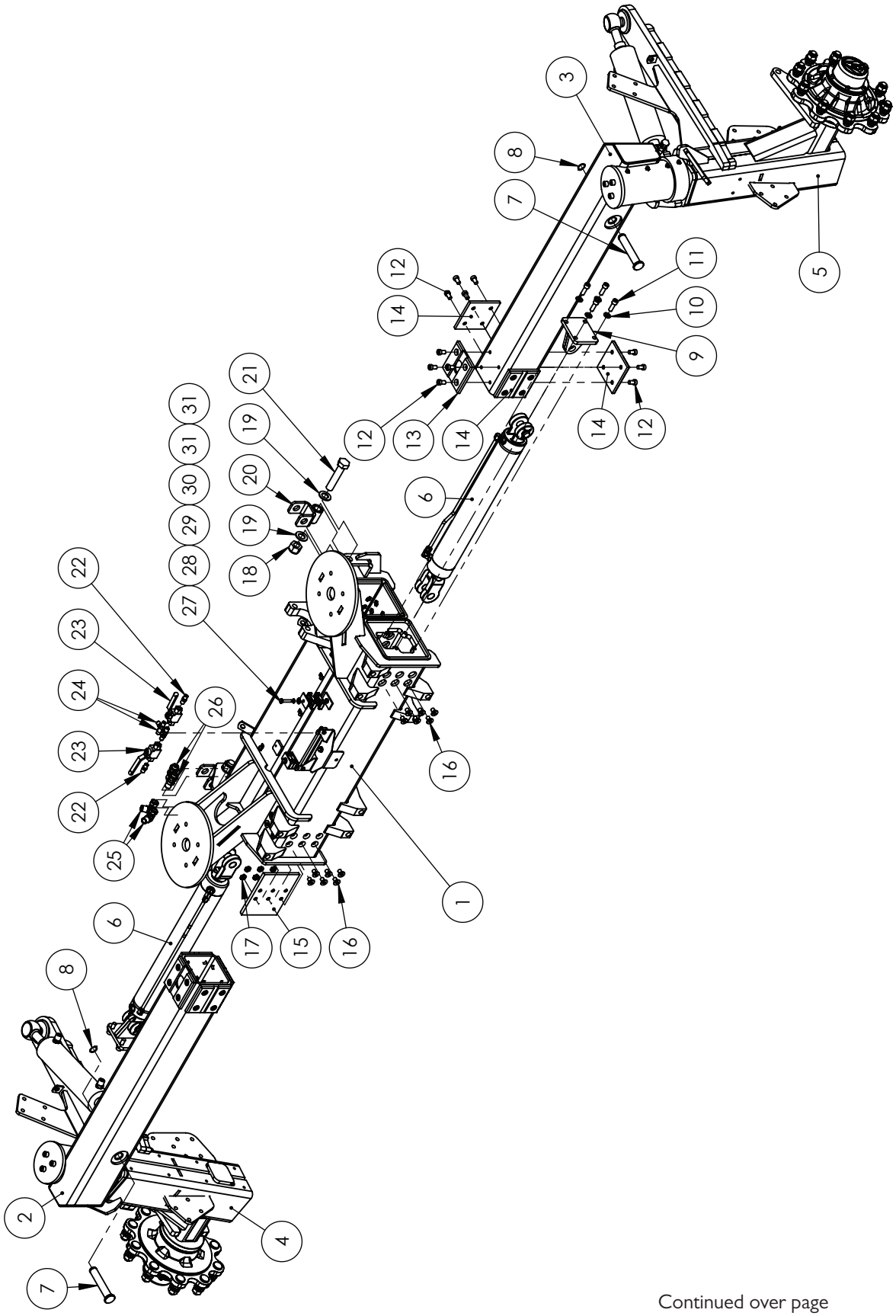

Continued over page

Axle Front 2WD - Adjustable 2-3m

ITEM NO.	PART NUMBER	DESCRIPTION	QTY.
-	GA4506601	Shim 2-3m Wear Pad Small	-
-	GA4506602	Shim 2-3m Wear Pad Large	-
1	GA4601470	Axle Housing, 2-3m Adjustable, Front	1
2	GA4601480	Axle Slider, 2-3m Adjustable, Front RH	1
3	GA4601475	Axle Slider, 2-3m Adjustable, Front LH	1
4	GA4601490	Dropleg, Front RH, 2-3m	1
5	GA4601485	Dropleg, Front LH, 2-3m	1
6	GA3500108	Hydraulic Cylinder, Bore 3", Rod 1.5", Stroke 500mm	2
7	GA4552695	Pin Adjustable Axle Extension Cylinder	2
8	GA5008519	Circlip, External, 25mm	2
9	GA4656665	Axle slider ram mount SP adjustable	2
	GA4510240	Plate, 1mm Shim, Adjustable Axle Cylinder Mount, 2-3m	#
10	GA5000577	Washer 12mm Flat SS HD	8
11	GA5000313	SHCS M12 x 35 GR12.9 ZP	8
12	GA0500015	SHCS, M12 x 20, Low Head Black	32
13	GA4583495	Wear Pad, Adjustable Axle Slider, Inner, Cast Nylon Green, 35mm slot	2
14	GA4583385	Wear Pad, Adjustable Axle Slider, Inner, Cast Nylon Green	6
15	GA4583390	Wear Pad, Adjustable Axle Slider, Outer, Cast Nylon Green	8
16	GA5070860	CSCS M12 x 20 GR12.9 ZP	48
17	GA5071280	Nut, M12 Half Lock Nut, ZP	48
18	GA5012469	Nut M24 Nyloc ZP	2
19	GA5001891	Washer 24mm Flat HD SS	4
20	GA4660670	Shock Absorber Mount, Front Axle	2
21	GA5011346	Bolt M24 x 115 GR8.8 ZP Special 75 to 77mm shank	2
22	GA3500218	Hydraulic adaptor, Nipple, 1/4" BSPT male x 1/4" BSPT male	2
23	GA5078083	Valve, Ball, Hydraulic, 1/4" BSPP female ports	2
24	GA3500269	Hydraulic adaptor, Tee, 1/4" BSPT male x 1/4" BSPT male x 1/4" BSPT male	2
25	GA3500333	Hydraulic adaptor, Elbow, 90 degree, 1/2" BSPT male x 1/2" BSPP female swivel	4
26	GAS99-603	Hydraulic adaptor, Bulkhead nipple, 1/2" BSP male x 1/2" BSP male	4
27	GA5048655	Bolt M8 x 40 GR8.8 ZP	2
28	GA5004919	Washer 8mm Spring SS	3
29	GA5003643	Washer 8mm Flat SS HD	3
30	GA5078042	Mounting clamp, Double type, Plate, Top, Group 2, RCD-2PT	2
31	GA5078031	Mounting clamp, Double type, Jaw, Pair, Group 2, 14mm, RCD-14J	2

Exact quantity will vary according to amount of adjustment needed.

Axle Front 2WD - Adjustable 3-4m - Steering

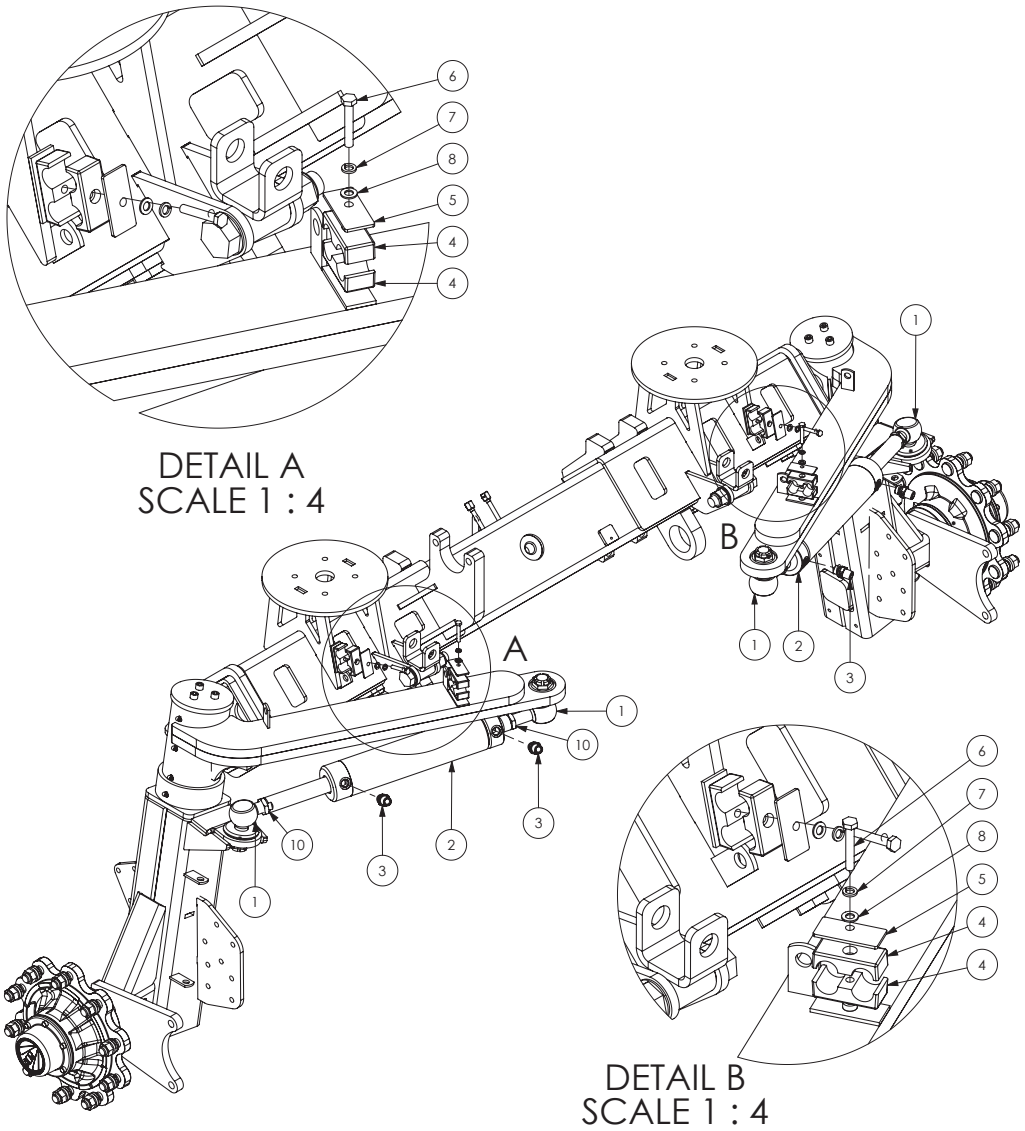

ITEM NO.	PART NUMBER	DESCRIPTION	QTY.
1	GA5065041	Ball joint, Right angle, M28 x 1.5 thread	4
2	GA3500081	Hydraulic Phasing Cylinder, Steering, 3-4m	2
3	GA3500310	Hydraulic nipple, 1/2” BSPT male x 1/2” BSPP male with O-ring	4
4	GA5078035	Mounting clamp, Double type, Jaw, Pair, Group 3, 22mm	4
5	GA5078046	Double Clamp Plate Top GR 3	4
6	GA5004727	Bolt M8 x 50 GR8.8 ZP	4
7	GA5004919	M8 Spring washer SS	4
8	GA5003643	Washer 8mm Flat SS HD	4
9	GA3500086	Hydraulic Cylinder, 3" x 500mm x 500mm, Tandem, 3-4m	1
10	GA4572170	Lock nut, M28 x 1.5, Suit tie rod end	4

Axle Front 2WD - Adjustable 3-4m - Housings

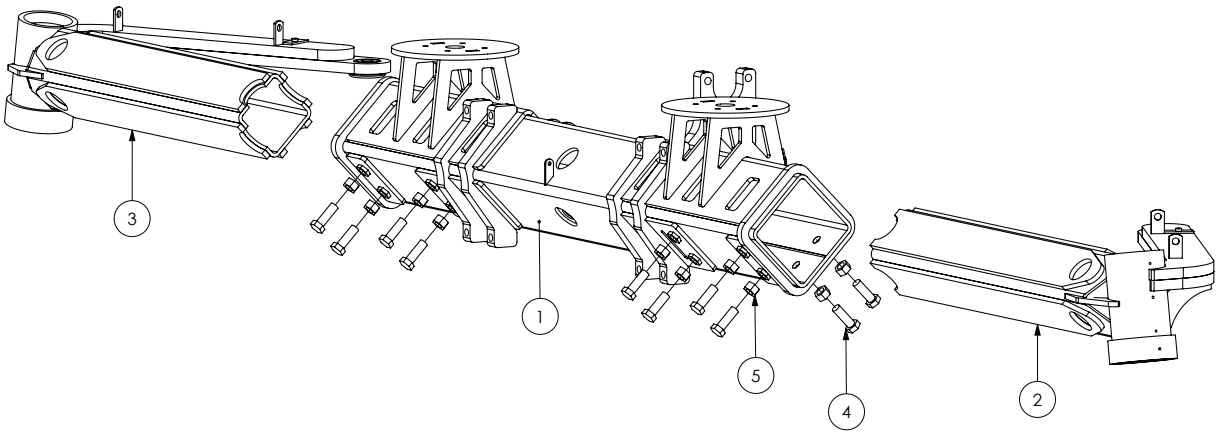

ITEM NO.	PART NUMBER	DESCRIPTION	QTY.
1	GA4661105	Axle Housing Front, 3-4m Centre	1
2	GA4661115	Axle Housing Front, 3-4m LH	1
3	GA4661110	Axle Housing Front, 3-4m RH	1
4	GA5011333	Bolt M20 x 60 GR8.8 ZP	16
5	GA5001709	Nut M20 Coarse ZP	16

Axle Front 2WD - Adjustable 3-4m - Drop Legs

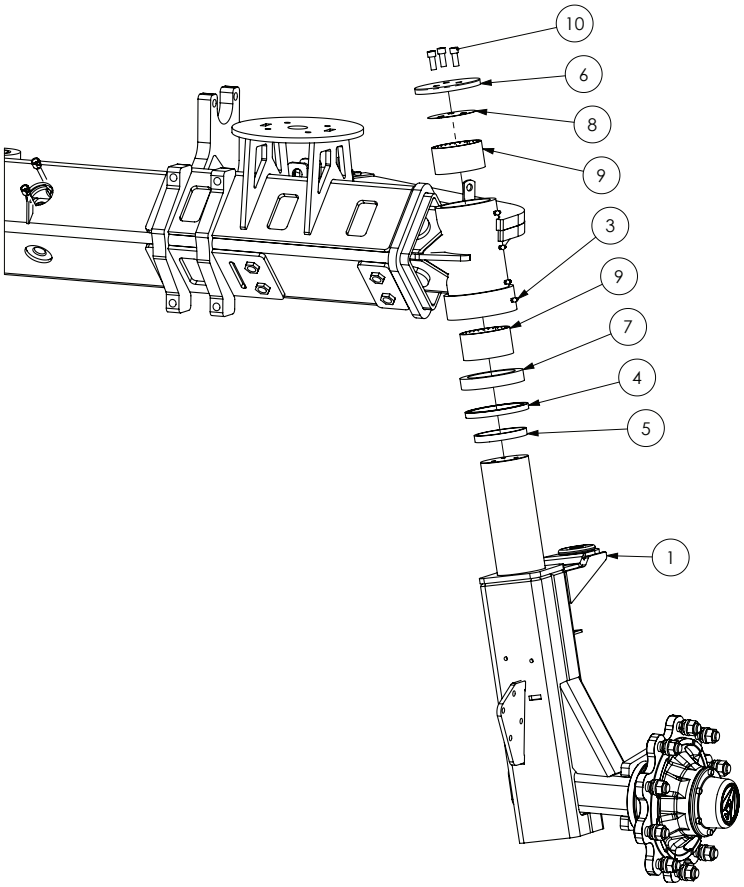

ITEM NO.	PART NUMBER	DESCRIPTION	QTY.
1	GA4661100	Dropleg, Front LH, 3-4m	1
2	GA4661095	Dropleg, Front RH, 3-4m	1
3	GA5009637	Grease Nipple 1/4" UNF 90 deg	8
4	GA5048635	Oil Seal 145mm X 120mm X 12mm	2
5	2MFA004-IGR	Spacer ring/thrust bearing mount for 2WD front axles	2
6	2M-FA011LAS	Top steering cap	2
7	GA5048245	Bearing, Ball thrust bearing, 110 ID x 145 OD x 25 mm thick	2
8	F70544A	Shim plate for 2WD front axles	2
9	GA5009454	Glacier bush, M liner with dimples, 110 ID x 60 mm long	4
10	GA5000307	SHCS M12 x 30	6

Axle Front 2WD - Adjustable 2-3m - Drop Legs

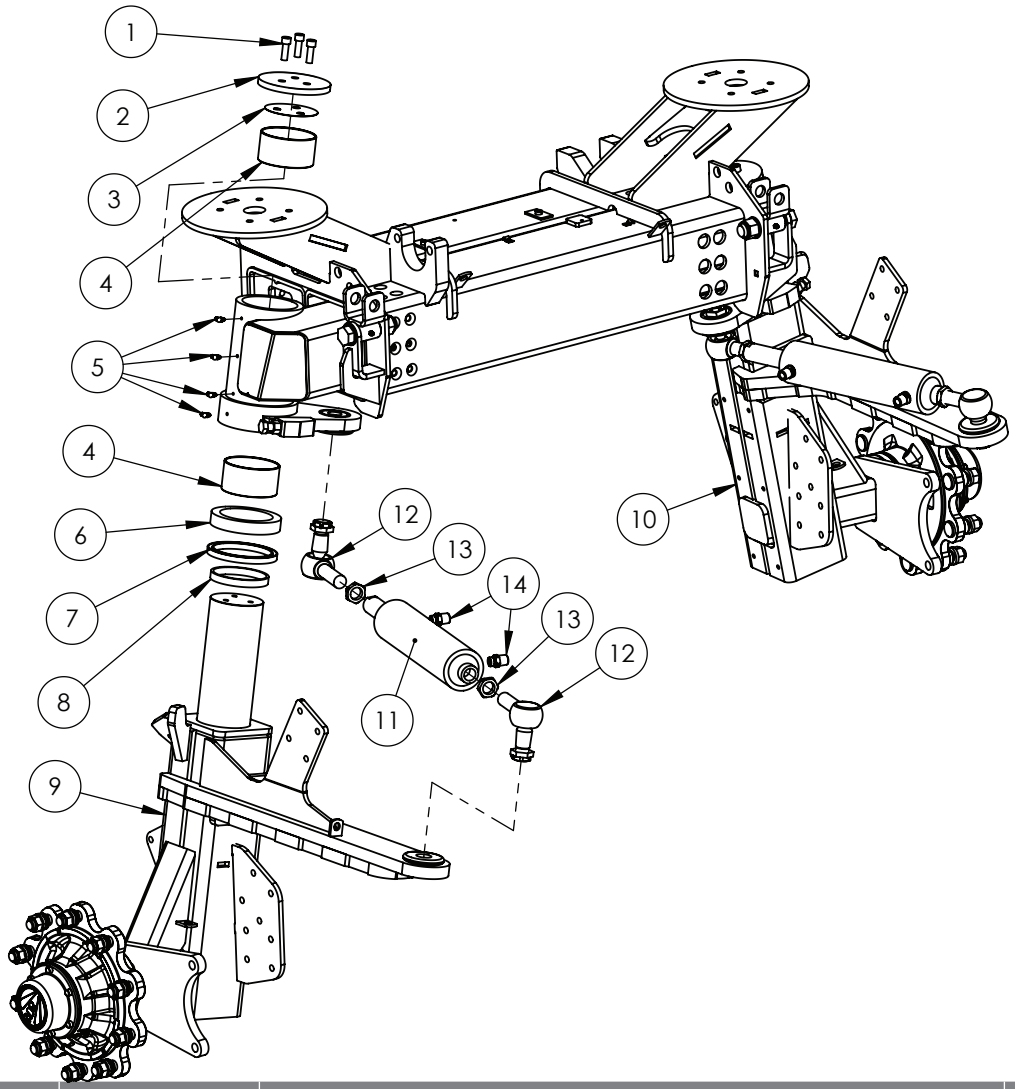

ITEM NO.	PART NUMBER	DESCRIPTION	QTY.
1	GA5000313	SHCS M12 x 35 GR12.9 ZP	6
2	2M-FA011LAS	King pin retaining cap, bolt on	2
3	F70544A	Shim, 0.5 mm thick, Suit Crop Cruiser king pin cap	2
4	GA5009453	Glacier bush, M-liner with dimples, 110 ID x 60 mm long	4
5	GA5009637	Grease nipple, Elbow, 90 degree, 1/4" UNF male	7
6	GA5048245	Bearing, Ball thrust bearing, 110 ID x 145 OD x 25 mm thick	2
7	GA5048635	Oil seal, 120 ID x 145 OD x 10 mm thick	2
8	2MFA004-IGR	Thrust ring, suit Crop Cruiser axle	2
9	GA4601485	Dropleg, Front LH, 2-3m	1
10	GA4601490	Dropleg, Front RH, 2-3m	1
11	GA5060750	Hydraulic Cylinder, Bore 3”, Rod 1.5”, Stroke 8”	2
12	GA5065041	Ball joint, Right angle, M28 x 1.5 thread	4
13	GA4553195	Nut, M28 x 1.5, 20mm Wide, ZP	4
14	GA3500363	Hydraulic adaptor, Nipple, 1/2” BSPT male x 3/4” UNO male O-ring	4

Axle Front 4WD - Steering Cylinder

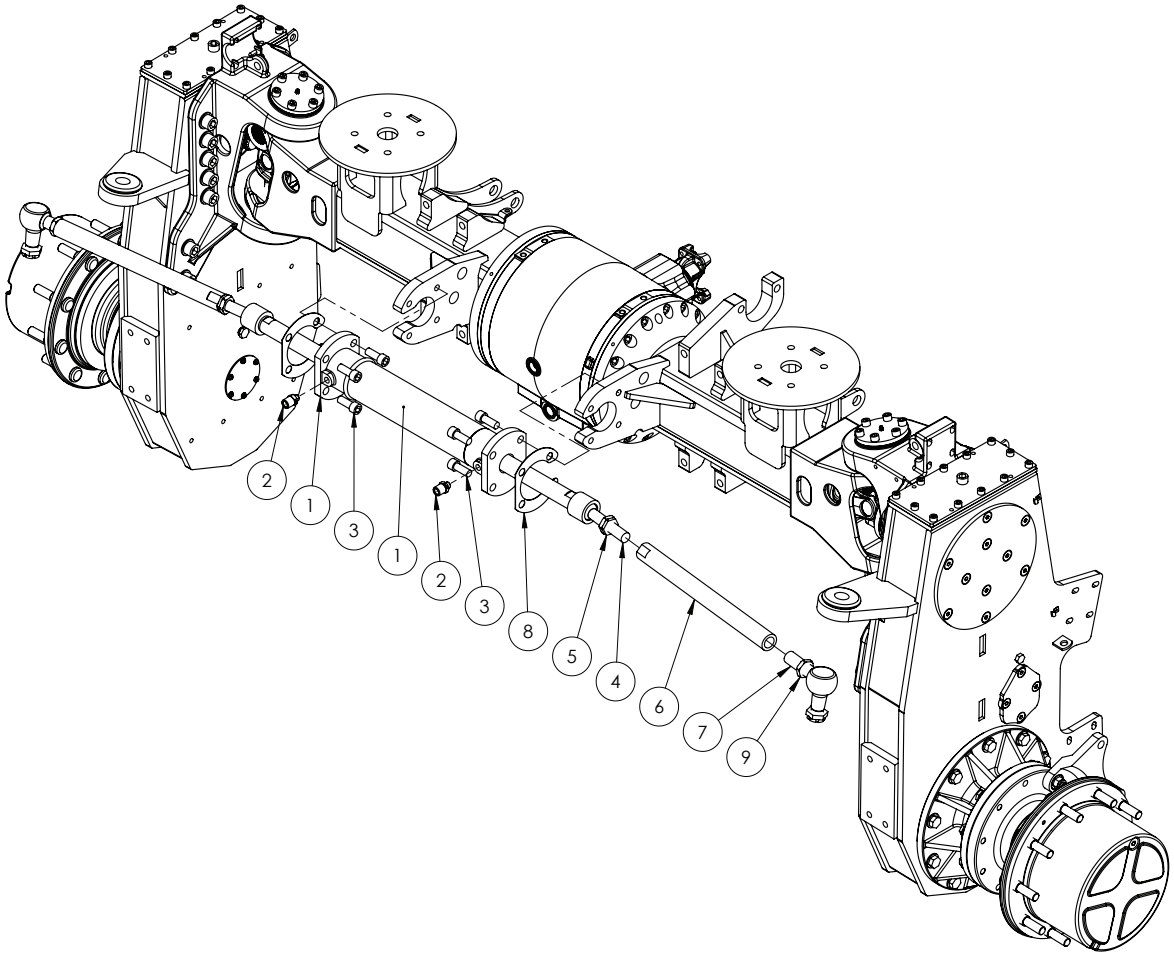

ITEM NO.	PART NUMBER	DESCRIPTION	QTY.
1	GA3500056	Hydraulic Cylinder, Steering 14” Stroke, Flange Both Ends, 9/16” UNO Ports	1
2	GA3500362	Hydraulic adaptor, Nipple, 1/2” BSPT male x 9/16” UN male Oring	2
3	GA5000925	SHCS M16 x 40 GR12.9 ZP	8
4	GA5065045	Ball joint, Inline, M24 x 1.5 pitch x M22 x 1.5 pitch	2
5	GA4553195	Nut, M28 x 1.5, 20mm Wide, ZP	2
6	GA4583135	Tie Rod 3m (450mm Long)	2
7	GA5065041	Ball joint, Right angle, M28 x 1.5 thread	2
8	GA4514640	Steering ram shim plate	2
9	GA4553195	Nut, M28 x 1.5, 20mm Wide, ZP	2

Axle Front 4WD - Steering Joint

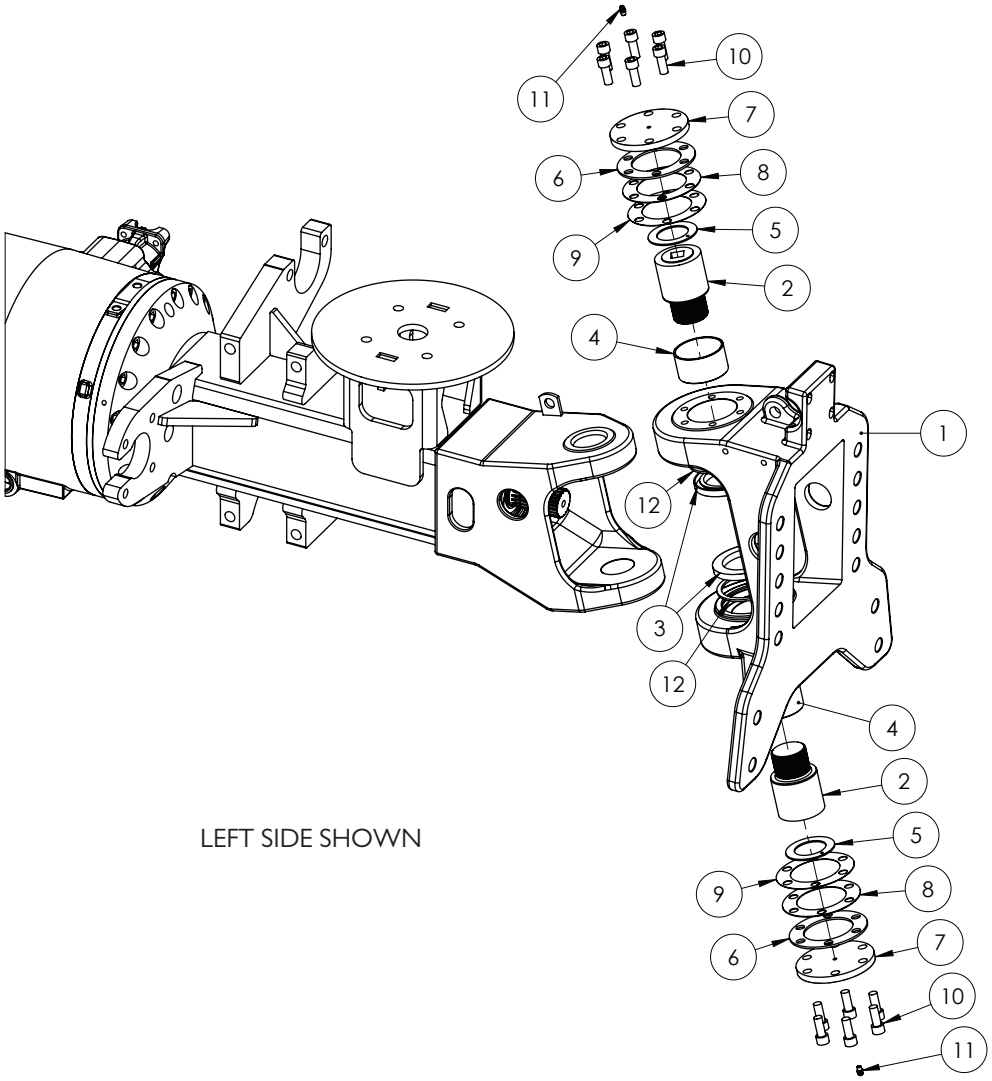

LEFT SIDE SHOWN

ITEM NO.	PART NUMBER	DESCRIPTION	QTY.
1	GA4550300	Kingpin Housing, Cast Outer, 4WD Front	2
2	MACH0039	King pin, suit 4WD axle	4
3	GA5018907	Seal, 70 ID x 100 OD x 10 mm	4
4	GA5009481	Glacier bush, 70 ID x 75 OD x 40 long	4
5	GA5009489	Washer, Glacier, 48 ID x 74 OD	4
6	STEERSHIM-MK2-3MM	Steer shim (3mm FMS)	4
7	dl24LAS	Steering assembly top cap (10mm FMS)	4
8	STEERSHIM-MK2-1MM	Steer shim, 1mm, suit 4WD	4
9	STEERSHIM-MK2-0.5MM	Steer shim (0.5mm FMS)	4
10	GA5000307	SHCS M12 x 30 GR12.9 ZP	24
11	GA5012203	Grease nipple, Short, 1/4" UNF	4
12	GA5070210	Circlip, 100mm Metric, Internal	4

Axle Front 4WD - Drop Leg Mounting

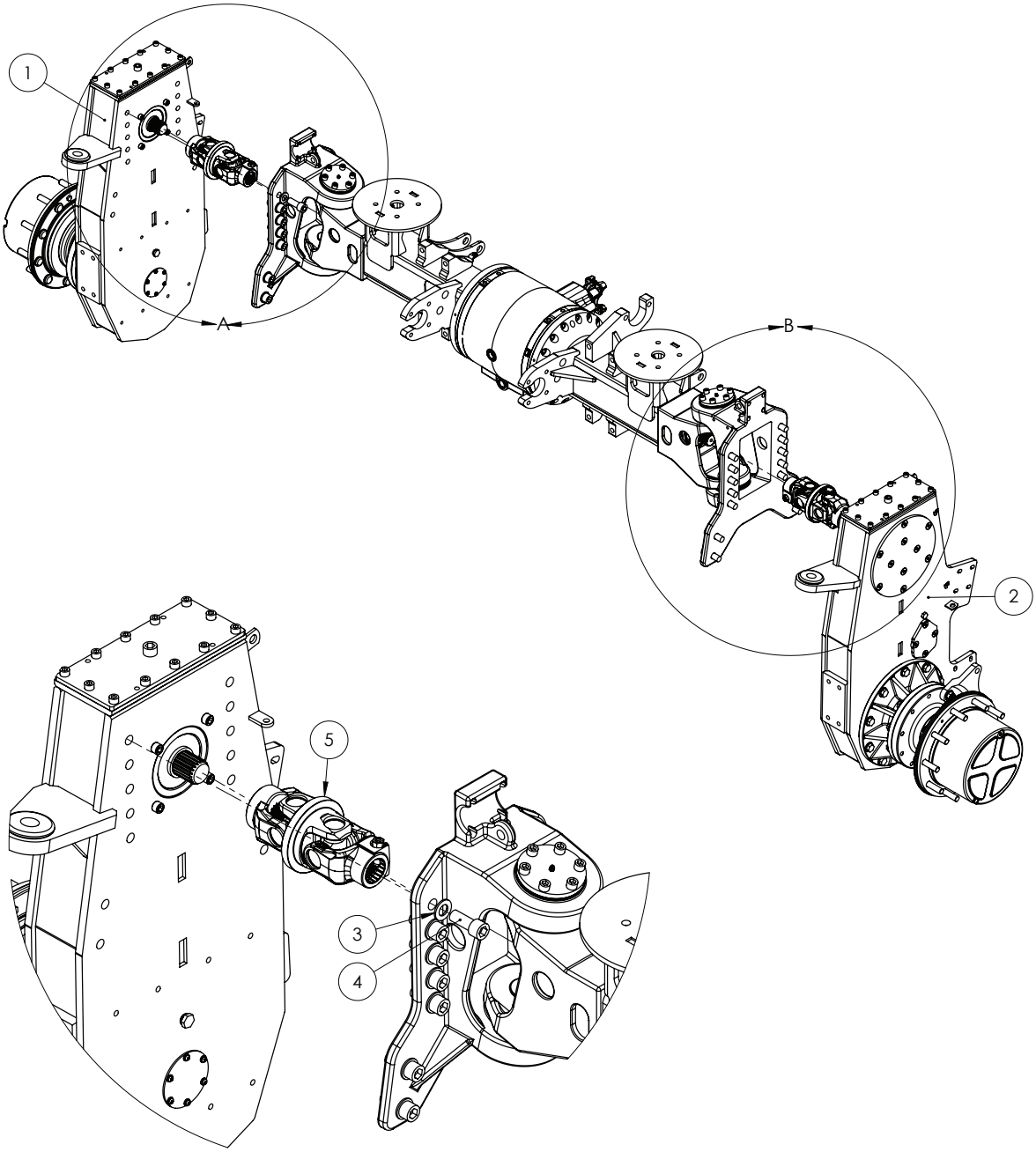

DETAIL A

ITEM NO.	PART NUMBER	DESCRIPTION	QTY.
1	*	Dropleg Assembly, 4WD Front RH	1
2	*	Dropleg Assembly, 4WD Front LH	1
3	GA5001741	Washer 20mm Flat SS HD	28
4	GA0500028	SHCS, M20 x 50, ZP Gr12.9	28
5	GA2700071	Universal Joint, Double, 4WD	2

* Sub-assembly shown on following pages

Axle Front 4WD - Shock Mounts

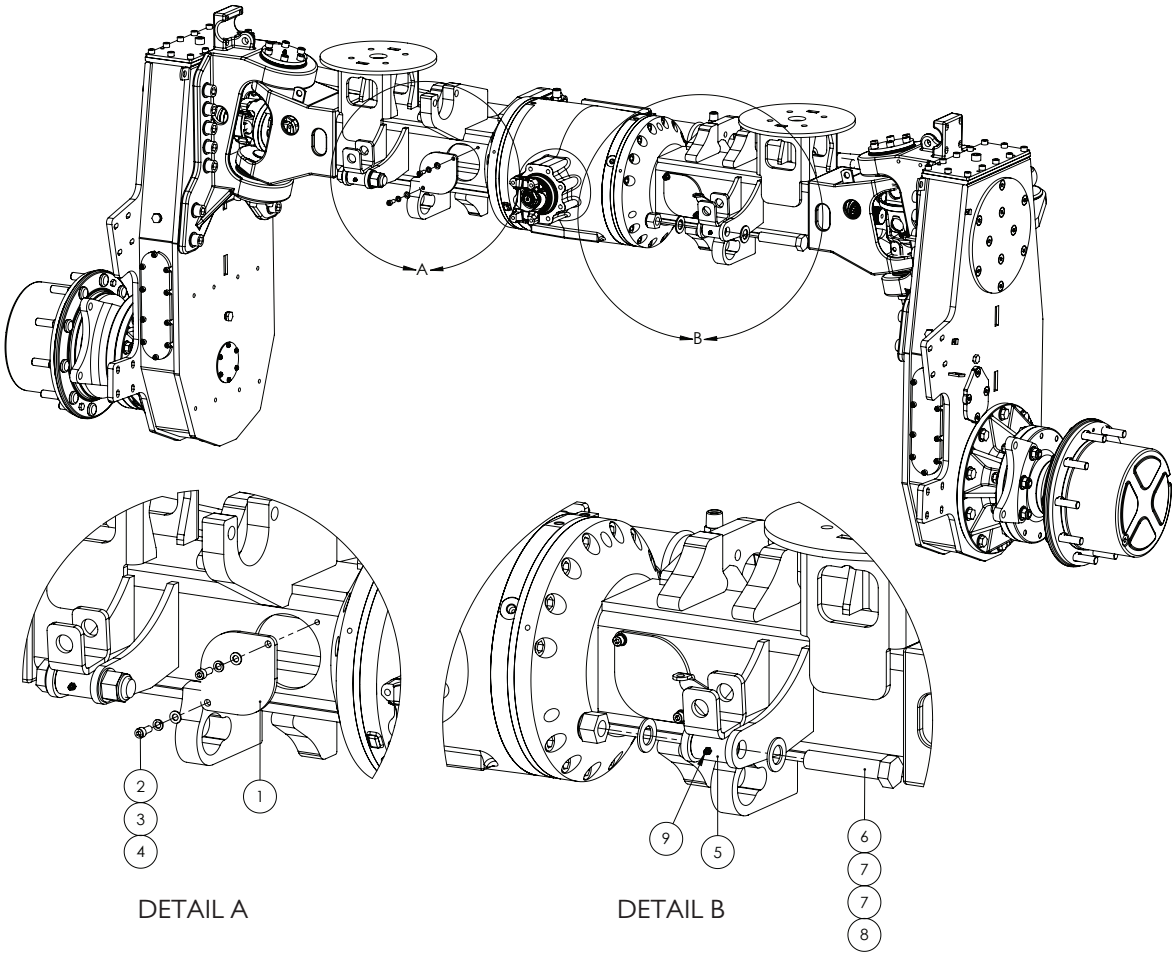

ITEM NO.	PART NUMBER	DESCRIPTION	QTY.
1	GA4536100	Axle cover plate, drive shaft bolts, 4WS 4WD	2
2	GA5004707	SHCS M8 x 20 GR12.9 ZP	4
3	GA5004919	Washer 8mm Spring SS	4
4	GA5003643	Washer 8mm Flat SS HD	6
5	GA4660670	Shock Absorber Mount, Front Axle	2
6	GA5011346	Bolt M24 x 115 GR8.8 ZP Special 75 to 77mm shank	2
7	GA5001891	Washer 24mm Flat HD SS	4
8	GA5012469	Nut M24 Nyloc ZP	2
9	GA5050450	Grease nipple 6mm	2

Axle Front 4WD - Differential & Mounting

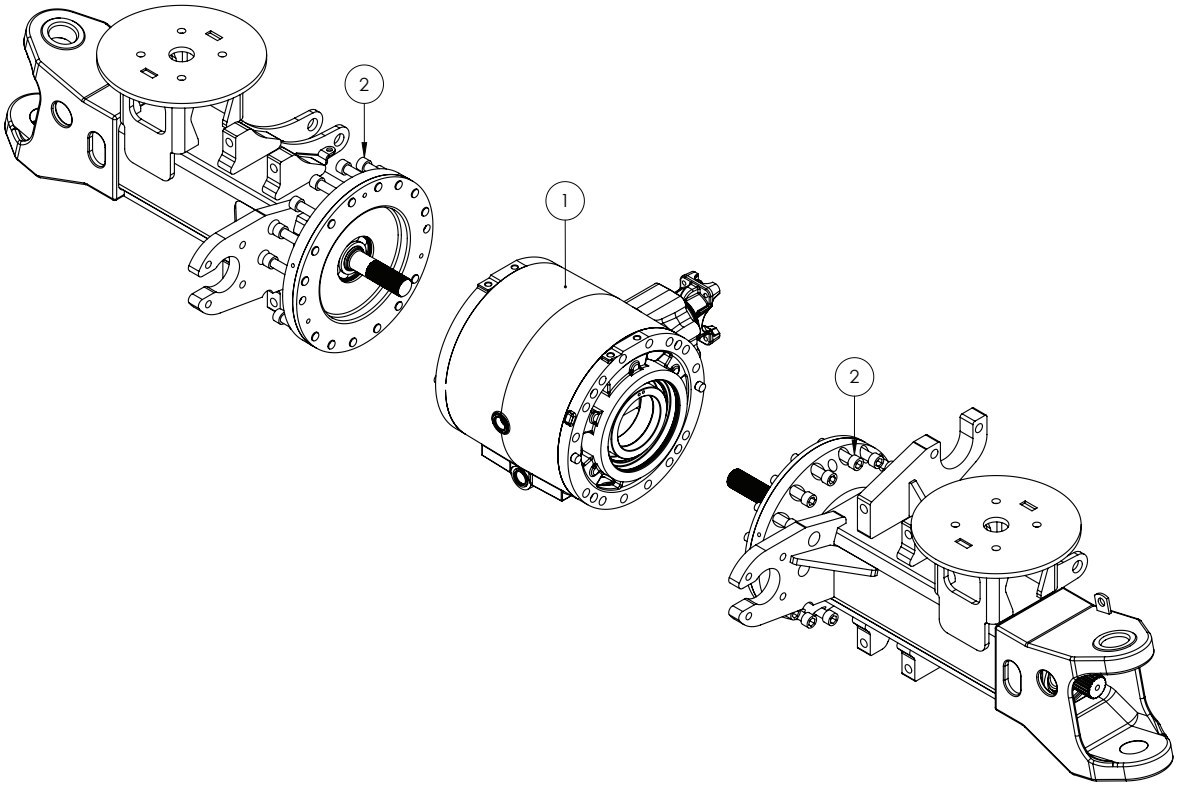

ITEM NO.	PART NUMBER	DESCRIPTION	QTY.
1	GA5071175	Diff Centre, 3.36:1 ratio, soft engage diff, G3 G4, JCB	1
2	XXX	SHCS M16 x 80 GR12.9 ZP	28

Axle Front 4WD - Shock Mounts

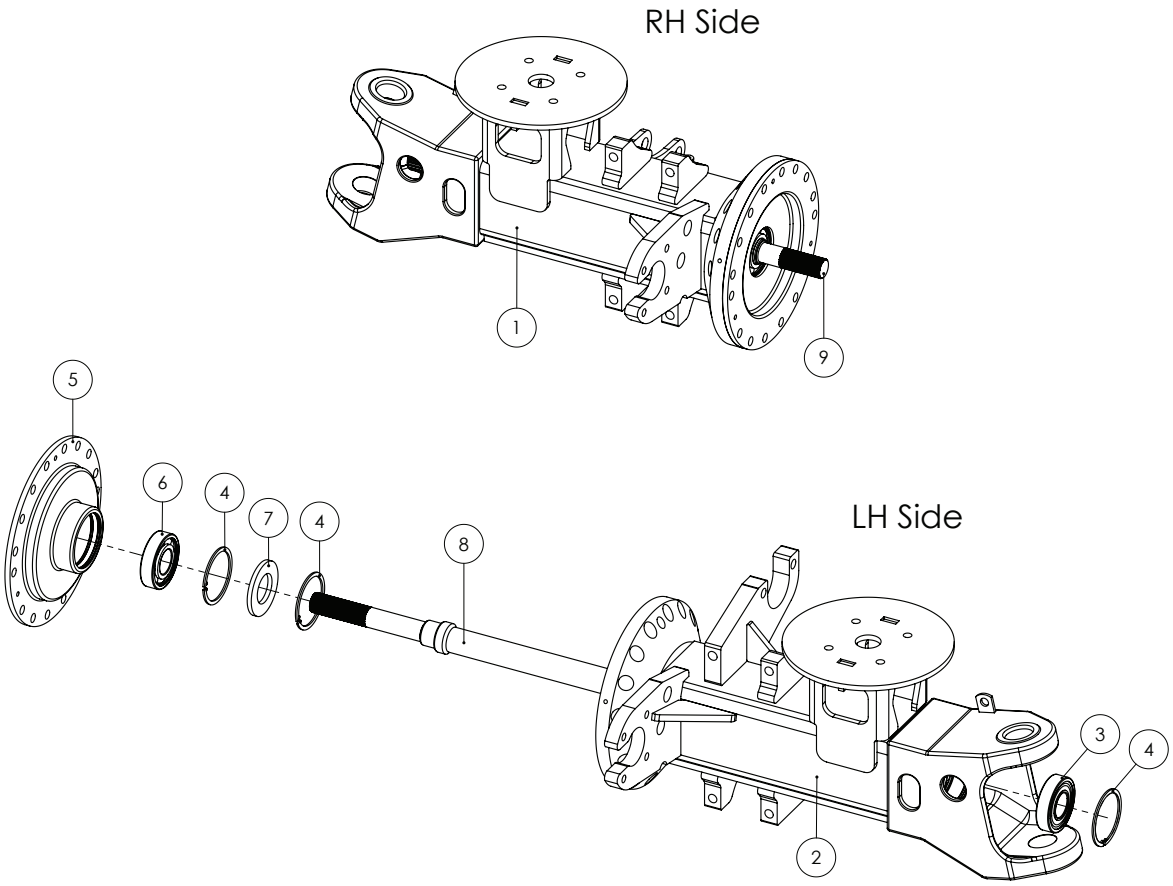

ITEM NO.	PART NUMBER	DESCRIPTION	QTY.
1	GA4661280	Axle Housing, 4WD Front RH	1
2	GA4661275	Axle Housing, 4WD Front LH	1
3	GA1700026	Bearing, Deep Groove Ball, Sealed	2
4	GA5070210	Circlip, 100mm Metric, Internal	6
5	GA4550940	Bearing Housing, Diff Centre, 4WD Front	2
6	GA1700025	Bearing, Deep Groove Ball, Non Sealed	2
7	GA5070195	Oil seal, 55 ID x 100 OD x 8 mm thick	2
8	GA4550925	Shaft, Internal Drive, 3m 4WD, LH	1
9	GA4550920	Shaft, Internal Drive, 3m 4WD, RH	1

Axle Front 4WD - Drop Leg Casing

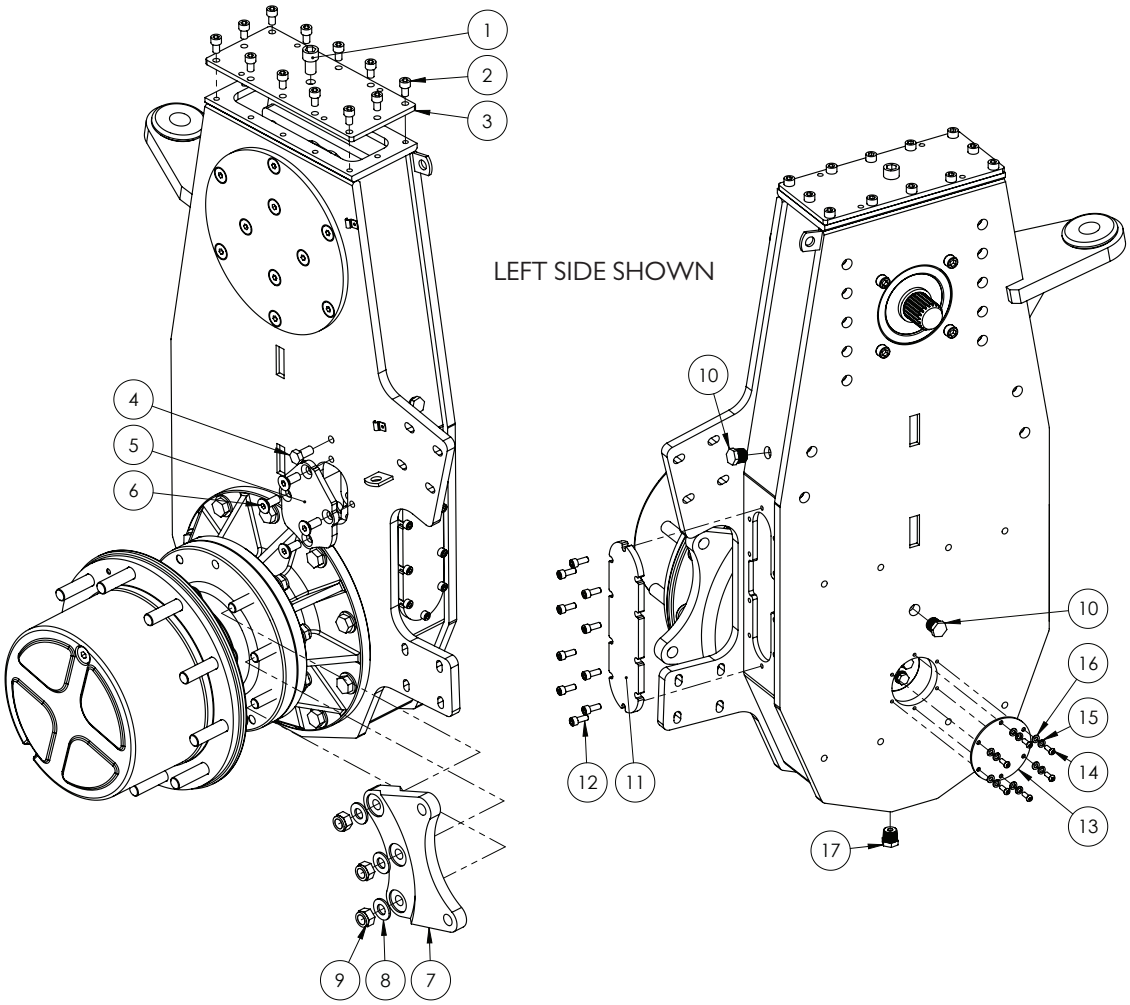

ITEM NO.	PART NUMBER	DESCRIPTION	QTY.
1	GA5000905	SHCS M16 x 25 GR12.9 ZP	1
2	GA5020495	SHCS M10 x 16 SS A2-70	12
3	GA4602605	Dropleg Cover, Top, 4WD Front Dropleg, G3 G4	1
4	GA5015005	Set Screw 1/2" x 1" UNF ZP GR8	1
5	F70933A	Upper cover plate (6mm FMS)	1
6	GA5051290	CSCS M12 x 30 GR12.9 ZP	4
7	GA4550930	Plate, Brake Caliper Mount, 4WD Front	1
8	GA5001043	Washer 16mm Flat SS HD	12
9	GA5001029	Nut M16 Nyloc ZP	3
10	GA5050670	Plug male brass 1/2" BSPT	2
11	GA4506115	Outer Cover	1
12	GA5004707	SHCS M8 x 20 GR12.9 ZP	10
13	GA4509455	Plate, Dropleg Inspection Hole, Lower	1
14	GA5004050	BHCS M6 x 16 SS A2-70	6
15	GA5004447	Washer 6mm Spring SS	6
16	GA5004437	Washer 6mm Flat SS	6
17	GA5048560	Plug male 1/2" BSPT Magnetic	1

Axle Front 4WD - Drop Leg Internals

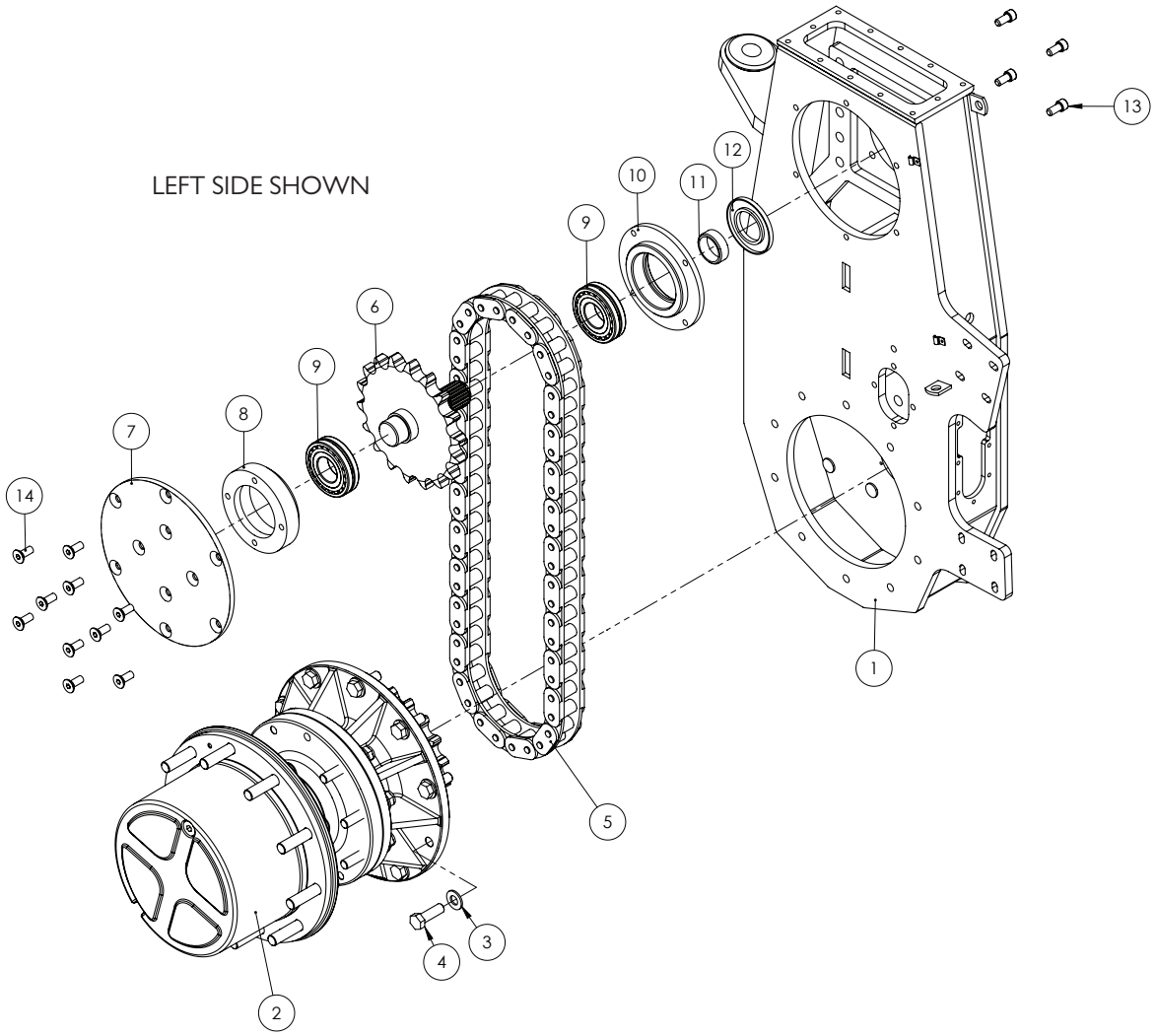

ITEM NO.	PART NUMBER	DESCRIPTION	QTY.
1	GA4661255	Dropleg Housing, LH Front, 4WD	1
2	GA4908495	Planet Hub Assembly, 4WD Front	1
3	GA5001043	Washer 16mm Flat SS HD	10
4	GA5000931	Bolt M16 x 50 GR8.8 ZP	10
5	GA5075260	Chain, 120HT, Renold, (28 LINK)	1
	GA5007373	Connecting Link, Chain Joining Link, 120HT, Tsubaki	-
6	GA4553165	18T Top Sprocket & Shaft	1
7	GA4506110	Cover, Top input, 300 mm OD, Rear dropleg	1
8	GA4553160	Bearing Holder 45 mm	1
9	GA5048275	Bearing, Spherical roller, Self aligning, 45 ID x 100 OD x 25 mm thick	2
10	GA4552060	Bearing holder, Inside, Top idler shaft, Drop leg	1
11	DL30	Spacer ring, Self propelled drop leg and diff output	1
12	GA5070195	Oil seal, 55 ID x 100 OD x 8 mm thick	1
13	GA5000297	SHCS M12 x 25 GR12.9 ZP	4
14	GA5051290	CSCS M12 x 30 GR12.9 ZP	10

Axle Front 4WD - Hub & Shaft Assembly

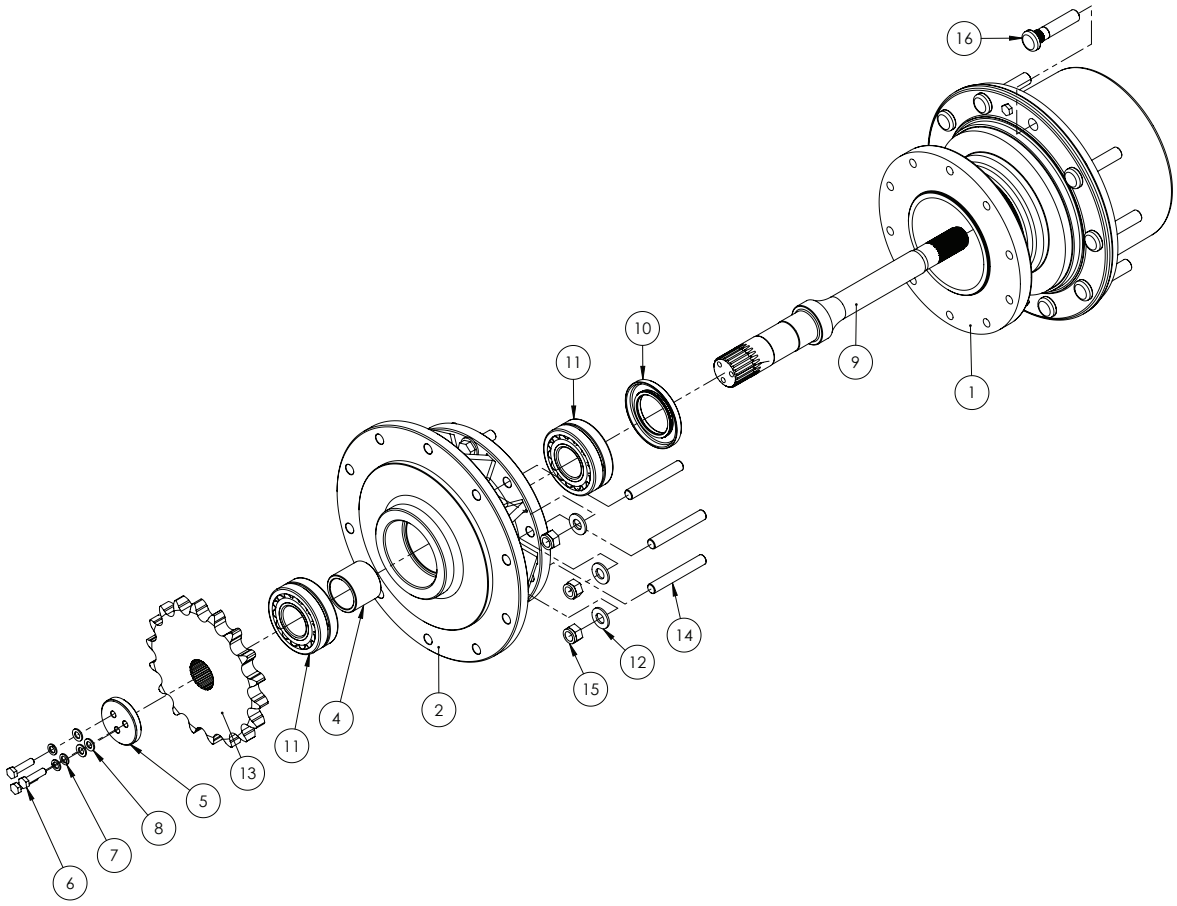

ITEM NO.	PART NUMBER	DESCRIPTION	QTY.
1	GA5071170*	Hub, planetary, 5.33:1, including wheel nuts and circlip, JCB	1
2	GA4553125	Hub Flange, Rear Dropleg	1
3	GA5000931	Bolt M16 x 50 GR8.8 ZP	6
4	GA4553155	Bearing Spacer Bottom	1
5	GA4553120	Retaining Plate	1
6	GA5006071	Bolt M10 x 40 GR10.9 ZP	3
7	GA5000137	Washer 10mm Spring SS	3
8	GA5000117	Washer 10mm Flat SS HD	3
9	GA4553100	Bottom Drive Shaft suit G3-G4	1
10	GA5069676	Oil Seal, 65 ID x 110 OD x 10 mm	1
11	GA5065000	Bearing, Double row spherical roller, 50 ID x 110 OD x 40 mm thick	2
12	GA5001043	Washer 16mm Flat SS HD	9
13	GA4553105	Bottom Sprocket Assy 18T	1
14	GA0500070	Grub Screw, M16 x 110mm, 2mm Pitch, Gr14.9, ZP	3
15	GA5001029	Nut M16 Nyloc ZP	3
16	GA4550135	Wheel Stud, 3/4" UNF, Long	10

* Sub-assembly shown on following pages

Axle Rear 2WD & 4WD - 2m & 3m

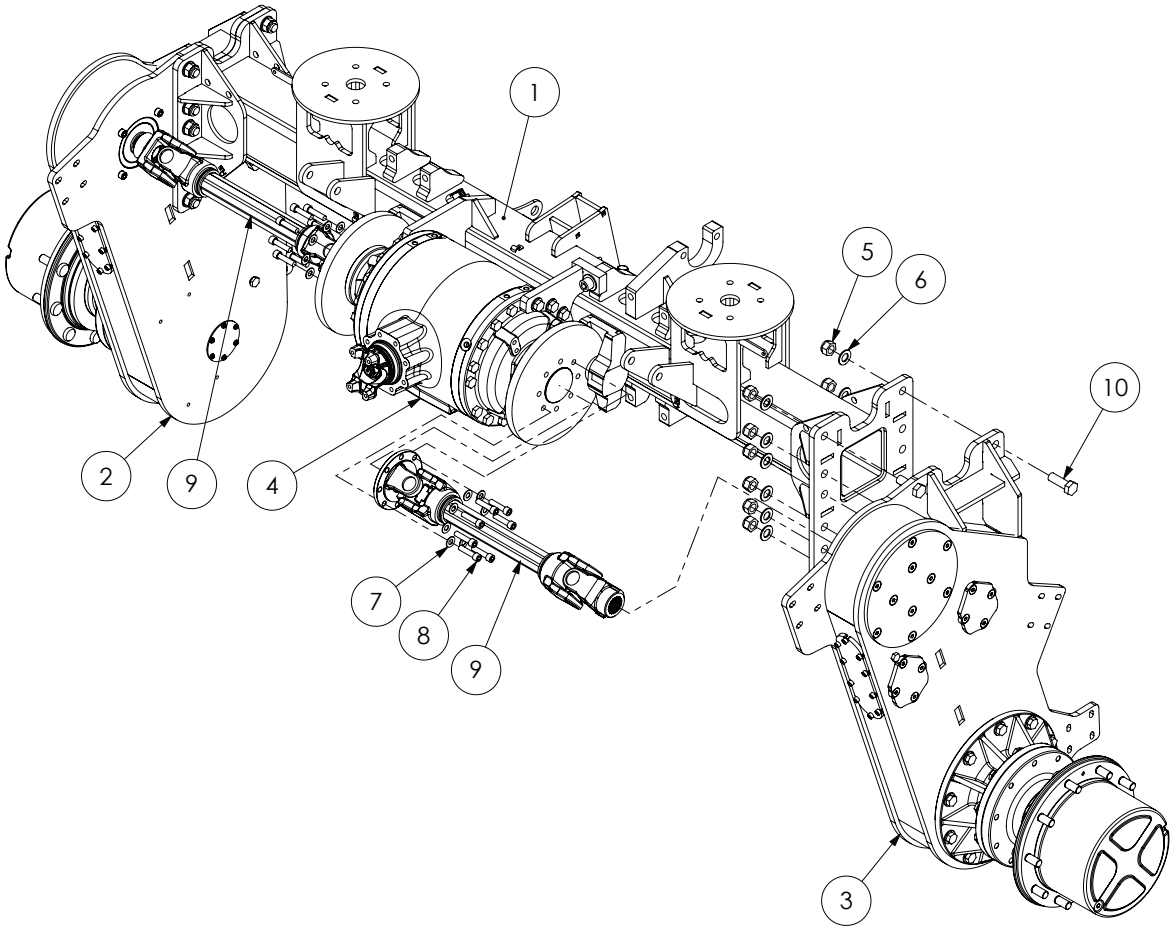

DROP LEG TOE ADJUSTMENT SHIMS

PART NUMBER	DESCRIPTION
GA4537200	Shim rear drop leg 0.5mm
GA4537205	Shim rear drop leg 1mm

ITEM NO.	PART NUMBER	DESCRIPTION	QTY.
1	GA4660055	Rear Axle Housing 3m 2WD	1
	GA4660035	Rear Axle Housing 2m 2WD	
2	GA4906345	Drop Leg Right hand Assembly	1
3	GA4906350	Drop Leg Left hand Assembly	1
4	*	Rear Axle - Differential Assembly	1
5	GA5048125	Nut M20 Nyloc	24
6	GA5001741	Washer 20mm Flat SS HD	24
7	GA5000577	Washer 12mm Flat SS HD	16
8	GA5051470	SHCS M12 x 50 ZP GR12.9	16
9	GA5071740	Drive Shaft Assembly, Double Yoke, 3m	2
	GA5071730	Drive Shaft Assembly, Double Yoke, 2m	
	GA2700082	Universal Cross, 2500 series, 36mm End Caps	-
10	GA5011333	Bolt M20 x 60 ZP GR8.8	24

* Sub-assembly shown on following pages

Axle Rear 2WD & 4WD - Differential Mounting

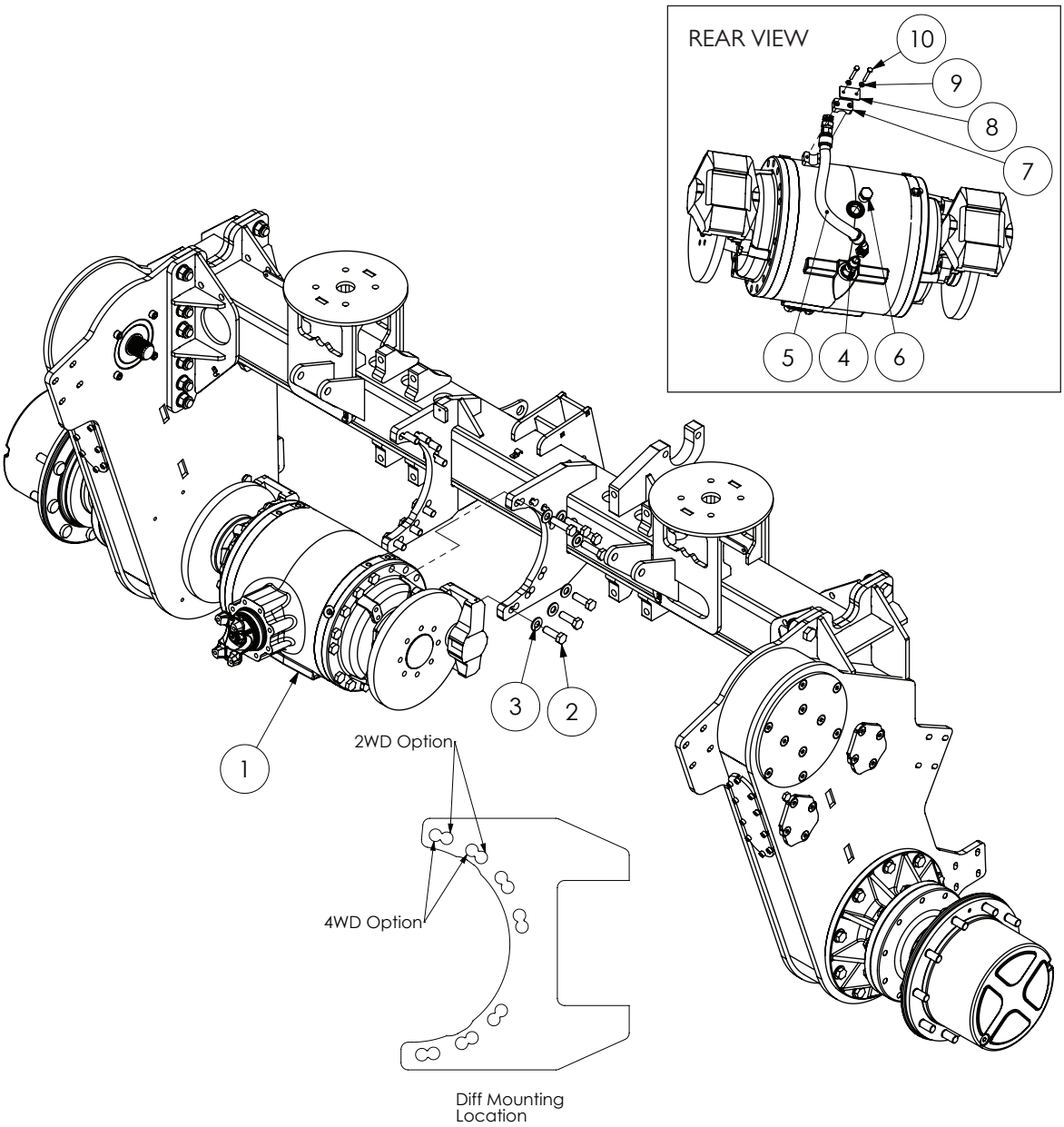

ITEM NO.	PART NUMBER	DESCRIPTION	QTY.
1	*	Rear Axle - Differential Assembly - JCB	1
2	GA5000931	Bolt M16 x 50 GR8.8 ZP	14
3	GA5001043	Washer 16mm Flat SS HD	14
4	GA3500226	Hydraulic adaptor, Nipple, 3/4” BSPT male x 1/2” BSPT male	1
5	GA3500022	Diff Drain Fill Hose - JCB	1
6	GA3500288	Hydraulic adaptor, Plug, 3/4” BSPT male	1
7	GA5078065	Mounting Clamp, Single type, Jaw, Pair, Group 3, 22mm	2
8	GA5078072	Mounting Clamp, Single type, Plate, Top, Group 3	1
9	GA5004437	Washer 6mm Flat SS	2
10	GA5004091	Bolt M6 x 50 GR8.8 ZP	2

* Sub-assembly shown on following pages

Axle Rear 2WD & 4WD - Drop Leg

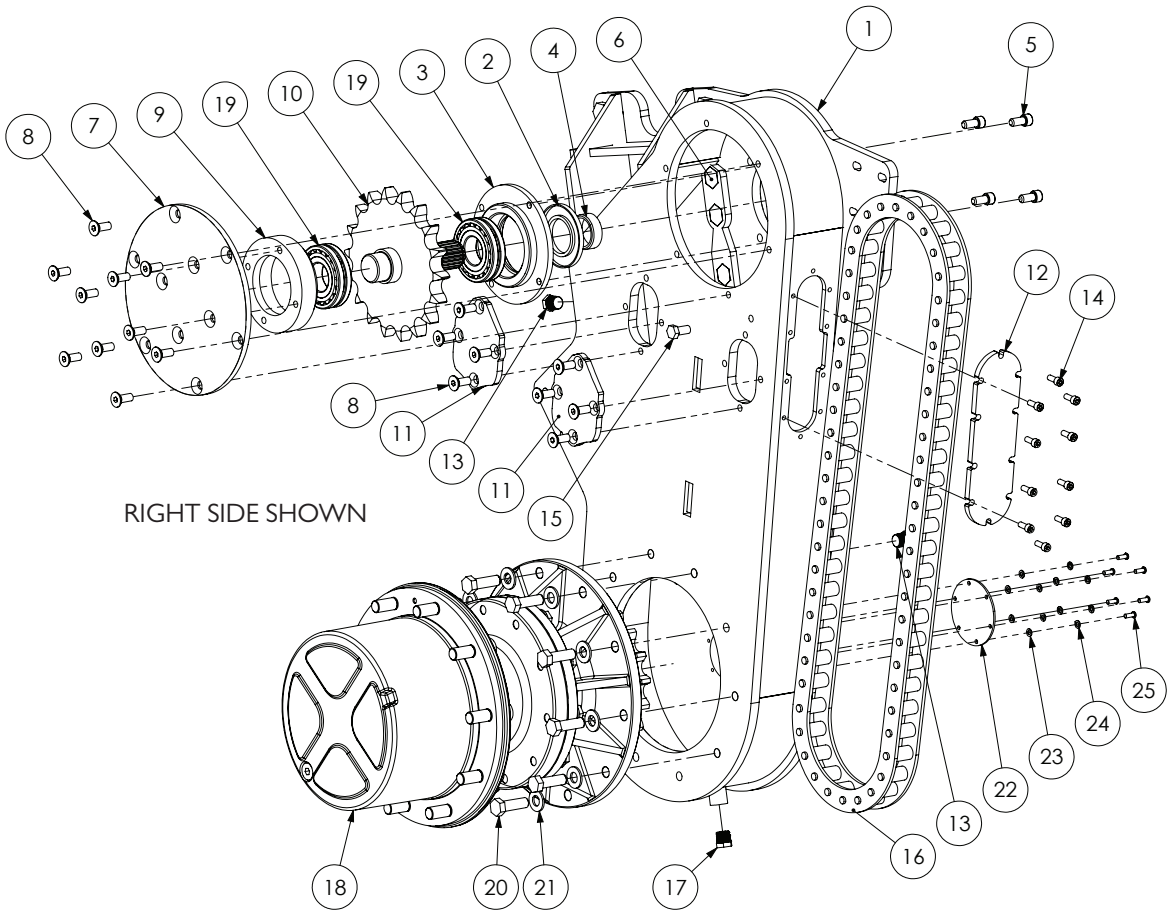

ITEM NO.	PART NUMBER	DESCRIPTION	QTY.
1	GA4660045	Rear Drop leg Left hand	1
	GA4660040	Rear Drop leg Right hand	1
2	GA5070195	Oil Seal 100 x 55 x 8mm	1
3	GA4552060	Bearing holder - top inside 45mm	1
4	DL30	Spacer ring, SP drop leg diff output shaft	1
5	GA5000297	SHCS M12 x 25 GR12.9 ZP	4
6	GA5011333	Bolt M20 x 60 GR8.8 ZP	12
7	GA4506110	Top outside cover plate	1
8	GA5051290	CSCS M12 x 30 GR12.9 ZP	18
9	GA4553160	Bearing Holder 45mm	1
10	GA4553165	18T Top sprocket & shaft	1
11	F70933A	Upper cover plate	2
12	GA4506115	Outer Cover	1
13	GA5050670	1/2" Brass Plug	2
14	GA5004707	SHCS M8 x 20 GR12.9 ZP	10

Continued over page

Axle Rear 2WD & 4WD - Drop Leg

ITEM NO.	PART NUMBER	DESCRIPTION	QTY.
15	GA5015005	Bolt 0.5” UNF x 1.0”	1
16	GA5075260	Chain, 120HT, Renold, (28 LINK)	1
	GA5007373	Connecting Link, Chain Joining Link, 120HT, Tsubaki	-
17	GA5048560	1/2" Brass Magnetic Plug	1
18	GA4906355	Planet Hub Assembly	1
19	GA5048275	Bearing, Spherical roller, Self aligning, 45 ID x 100 OD x 25mm thick	2
20	GA5000931	Bolt M16 x 50 GR8.8 ZP	10
21	GA5001043	Washer 16mm Flat SS HD	10
22	GA4509455	Plate, Dropleg Inspection Hole, Lower	1
23	GA5004437	Washer 6mm Flat SS	6
24	GA5004447	Washer 6mm Spring SS	6
25	GA5004050	BHCS M6 x 16 SS A2-70	6

Axle Rear 2WD & 4WD - Hub & Shaft Assembly

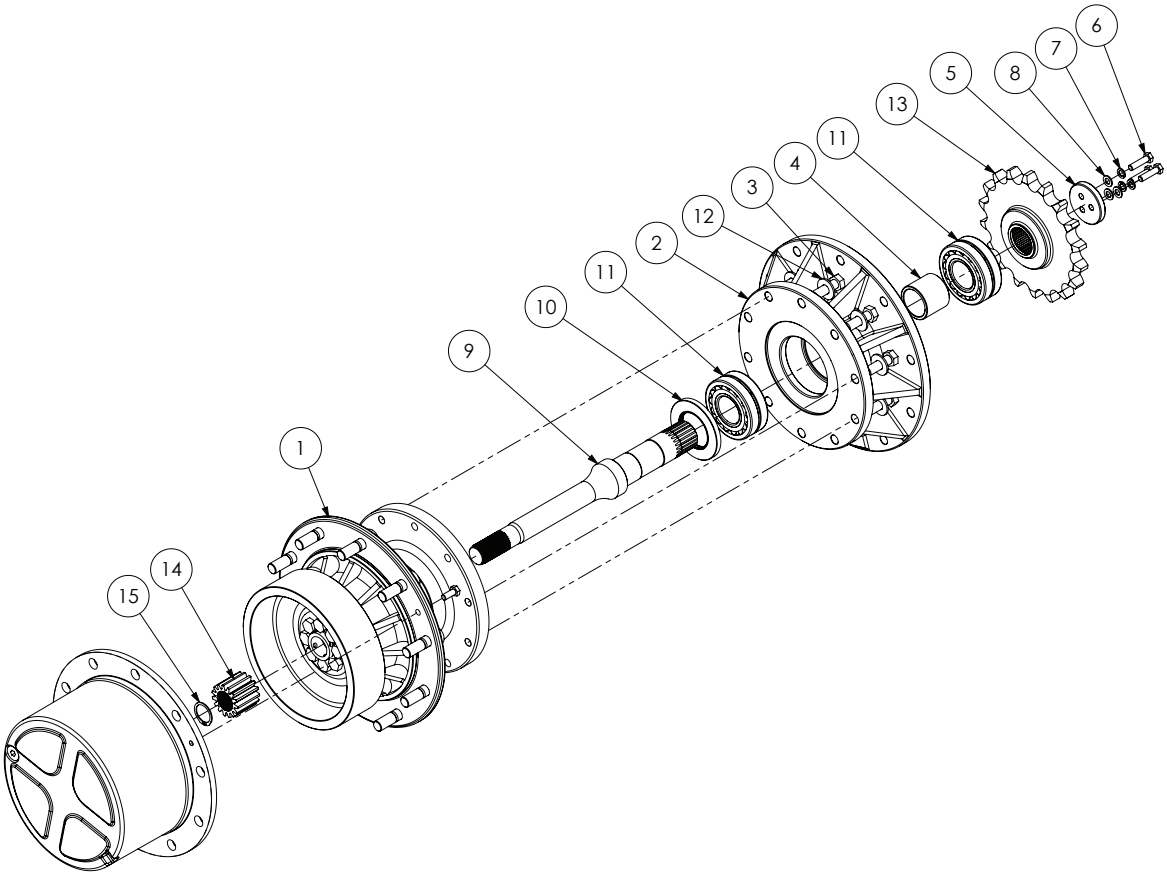

ITEM NO.	PART NUMBER	DESCRIPTION	QTY.
1	GA5071170*	JCB Planetary Hub	1
2	GA4553125	Adaptor Flange - Planet Hub	1
3	GA5000931	Bolt M16 x 50	10
4	GA4553155	Bearing Spacer - Bottom	1
5	GA4553120	Retainer Plate	1
6	GA5006071	Bolt M10 x 40 GR10.9 ZP	3
7	GA5000137	Washer 10mm Spring SS	3
8	GA5000117	Washer 10mm Flat SS HD	3
9	GA4553100	Bottom Drive Shaft	1
10	GA5069676	Oil Seal, 65 ID x 110 OD x 10 mm	1
11	GA5065000	Bearing, Double row spherical roller, 50 ID x 110 OD x 40 mm thick	2
12	GA5001043	Washer 16mm Flat SS HD	10
13	GA4553105	Bottom Sprocket Hub 18T	1
14	-	Sun Gear - JCB - 454/16405	1
15	GA0500018	Circlip, 33mm ID External, JCB Planet hub	1

* Sub-assembly shown on following pages

Axle Rear 2WD & 4WD - Planetary Hub

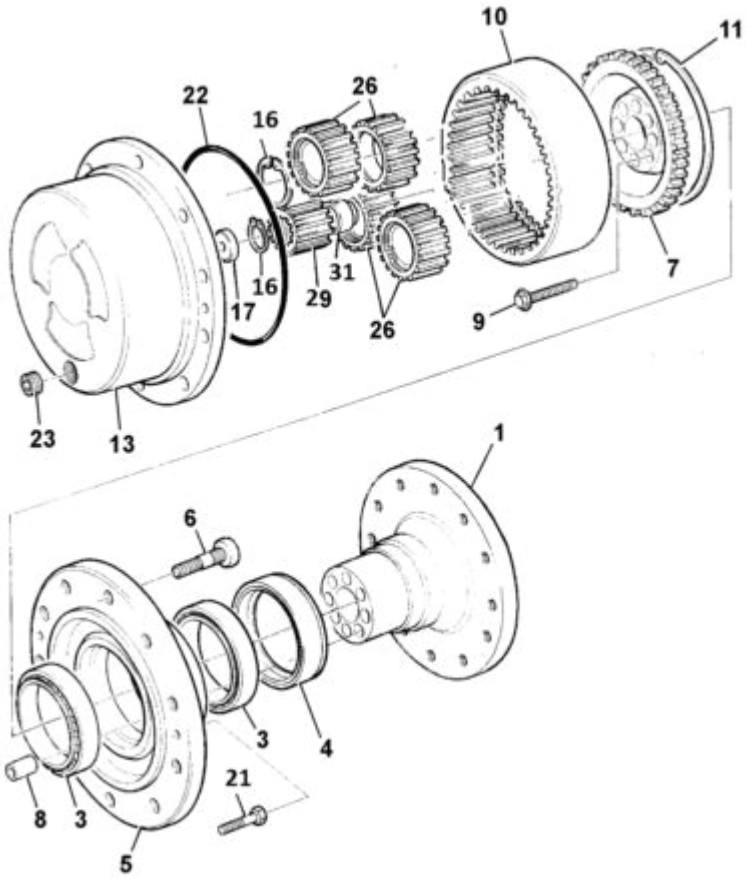

ITEM NO.	PART NUMBER (JCB)	DESCRIPTION	QTY.
1	454/16402	Stub axle	1
3	907/M7473	Bearing	2
4	904/M6779	Seal	1
5	454/13502	Carrier wheel bearing	1
6	826/M5600	Stud wheel stud	10
7	454/16407	Carrier annulus	1
8	450/12703	Dowel Hollow	8
9	826/01060	Bolt M14 x 70mm long	8
10	454/16404	Gear annulus ring.	1
11	821/00210	Circlip Internal Square Section	4
13	458/M4234	Hub planetary carrier	1
16	2203/0054	Circlip 821/00494	1
17	450/10208	Pad Thrust	v1
21	1321/0407Z	Bolt Coated M10 x 25	2
22	828/00196	O'Ring	1
23	816/M3848	Plug tapered, magnetic 3/4"BSP 14mm Drive	1
26	454/16600	Gear planet & bearing assembly	4
29	454/16405	Gear sun 52mm long	1
31	458/M4315	Spacer	1

Axle Rear 2WD - Adjustable 2-3m

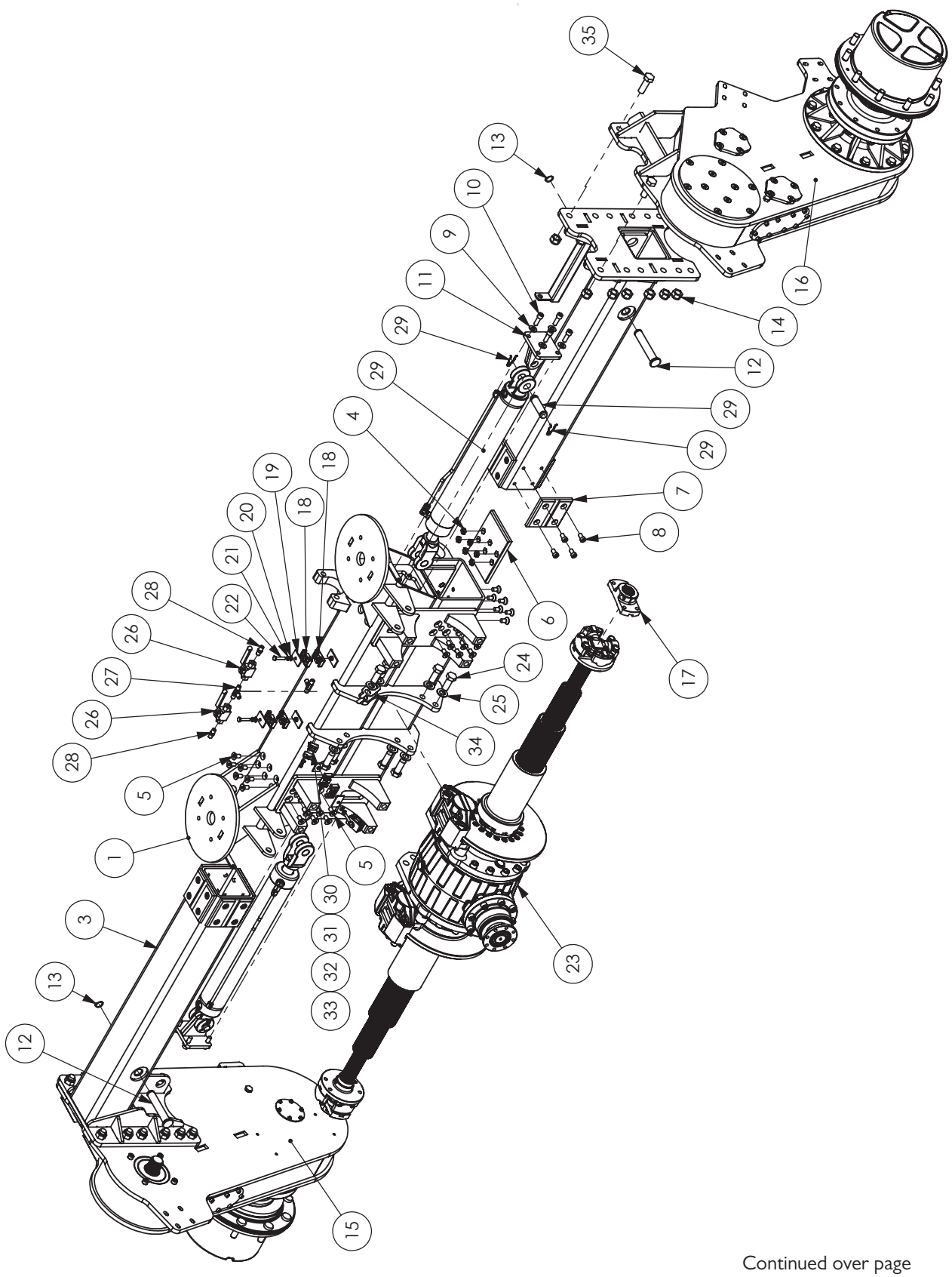

Continued over page

Axle Rear 2WD - Adjustable 2-3m

ITEM NO.	PART NUMBER	DESCRIPTION	QTY.
1	GA4660725	Rear axle housing 2-3m	1
2	GA4658580	Rear axle inner left 2-3m	1
3	GA4658575	Rear Axle inner right 2-3m	1
4	GA5071280	M12 Plain nut half	48
5	GA5000289	CSCS M12 x 25 GR12.9 ZP	48
6	GA4583390	Slider adjustable axle outer	8
7	GA4583385	Slider adjustable axle inner	8
8	GA0500015	SHCS, M12 x 20, Low Head, Black	32
9	GA5000577	Washer 12mm Flat SS HD	8
10	GA5000313	SHCS M12 x 35 GR12.9 ZP	8
11	GA4656665	Axle slider ram mount SP adjustable	2
	GA4510240	Plate, 1mm Shim, Adjustable Axle Cylinder Mount, 2-3m	#
12	GA4552695	Pin Adjustable Axle Extension Cylinder	2
13	GA5008519	Circlip external 25mm	2
14	GA5048125	Nut M20 Nyloc Coarse ZP	24
15	GA4906345	Dropleg RH Assembly	1
16	GA4906350	Dropleg LH Assembly	1
17	GA4552201	Drive shaft flange dropleg input adjustable axle	2
18	GA5078031	Mounting clamp, Double type, Jaw, Pair, Group 2, 14mm	4
19	GA5078042	Double Clamp Plate Top GR2	4
20	GA5003643	Washer 8mm Flat SS HD	4
21	GA5004919	Washer 8mm Spring SS	4
22	GA5048655	Bolt M8 x 40 GR8.8 ZP	4
23	GA2700001	Differential, with adjustable drive shafts and brakes fitted suit 2 to 3m, Dromos	1
24	GA5001515	M20 x 1.5P x 50 HT Bolt	8
25	GA5001741	Washer 20mm Flat SS HD	8
26	GA5078083	Ball valve 1/4" BSPP	2
27	GA3500269	Hydraulic adapter, Tee, 1/4" female x 1/4" female x 1/4" female	2
28	GA3500218	Hydraulic adaptor, Nipple, 1/4" BSP x 1/4" BSP	2
29	GA3500108	Hydraulic Cylinder, 3" bore, 500mm Stroke, Adjustable Axle	2
30	HYD002LAS	Hydraulic fitting clamp bracket	1
31	GA5008793	Tee, Flare, 7/16” 24 TPI female thread, Suit 1/4” tube	1
32	GA5004437	Washer 6mm Flat SS	1
33	GA5004025	SHCS M6 x 10 SS A2-70	1
34	GA4400275	Plate, Diff Shim, Dromos 2-3m, 0.5mm	#
35	GA5011333	Bolt M20 x 60 GR8.8 ZP	24

Exact quantity will vary according to amount of adjustment needed.

Axle Rear 2WD - Adjustable 3-4m - Differential

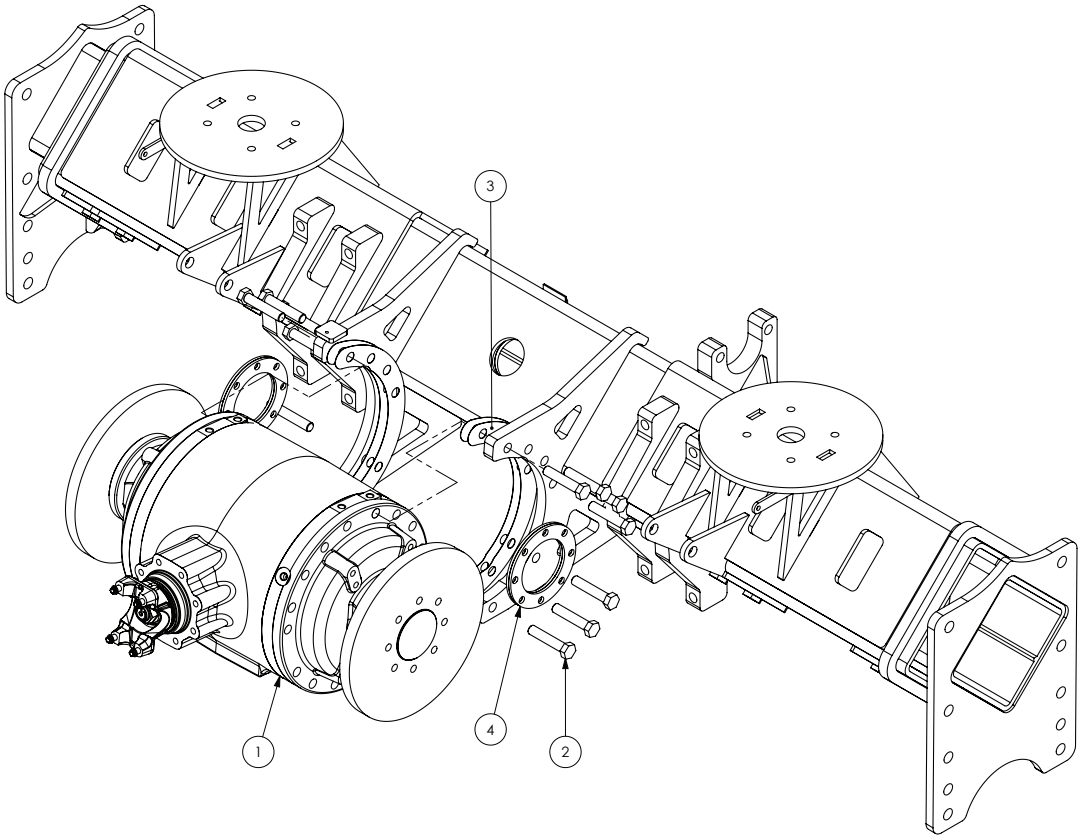

ITEM NO.	PART NUMBER	DESCRIPTION	QTY.
1	*	Rear Axle - Differential Assembly - JCB	1
2	GA5011307	Bolt M16 x 80 GR8.8 ZP	14
3	GA4508960	Plate, Shim 0.5mm, Diff Centre	4
4	GA4509800	Plate, Spacer 5mm, Drive Shaft	4

Axle Rear 2WD - Adjustable 3-4m - Housings

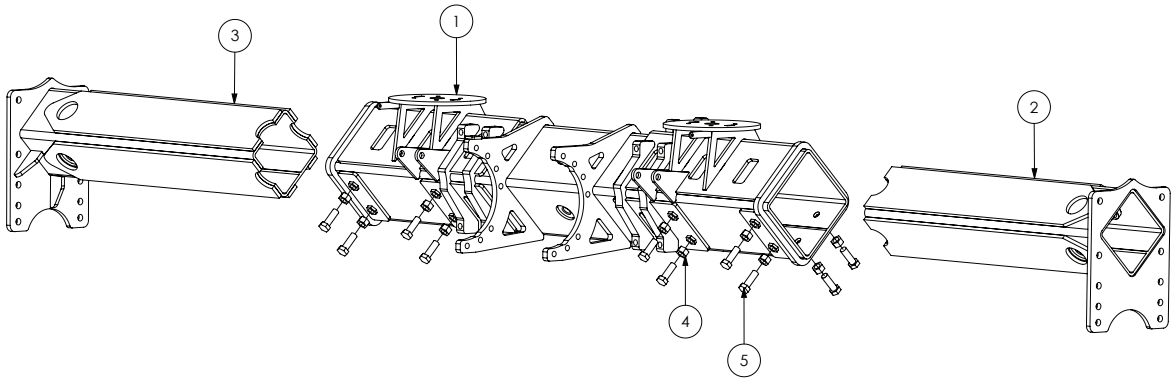

ITEM NO.	PART NUMBER	DESCRIPTION	QTY.
1	GA4661120	Axle Housing Rear, 3-4m Centre	1
2	GA4661130	Axle Housing Rear, 3-4m LH	1
3	GA4661125	Axle Housing Rear, 3-4m RH	1
4	GA5001709	Nut M20 Coarse ZP	16
5	GA5011333	Bolt M20 x 60 GR8.8 ZP	16

Axle Rear 2WD - Adjustable 3-4m - Drop Legs

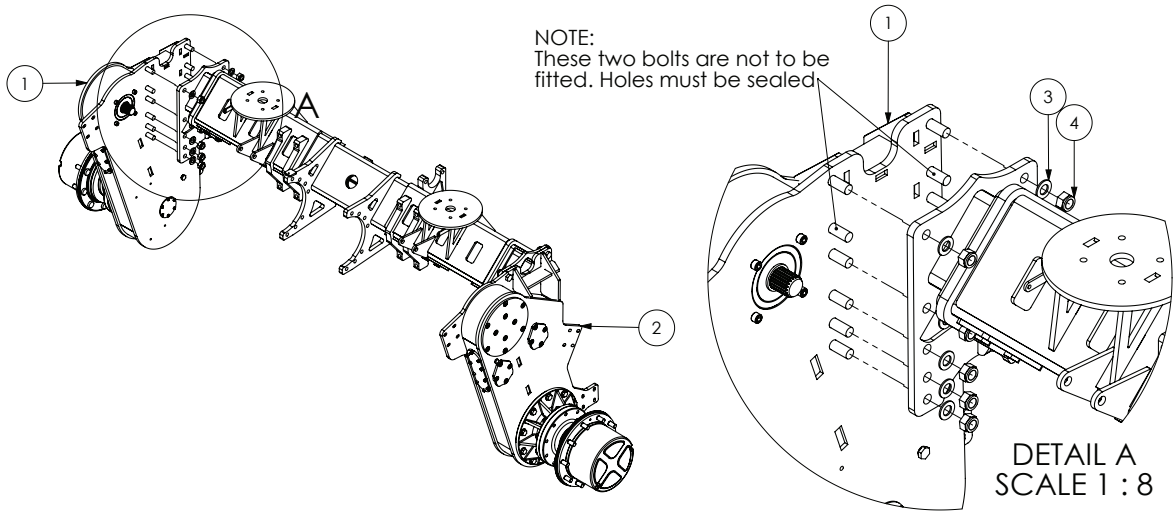

ITEM NO.	PART NUMBER	DESCRIPTION	QTY.
1	GA4906345	Rear Dropleg RH	1
2	GA4906350	Rear Dropleg LH	1
3	GA5001741	Washer 20mm Flat SS HD	20
4	GA5048125	Nut M20 Nyloc Coarse ZP	20
5	GA4509800	Plate, Spacer 5mm, Drive Shaft	4

Axle Rear 2WD - Adjustable 3-4m - Drive Shafts

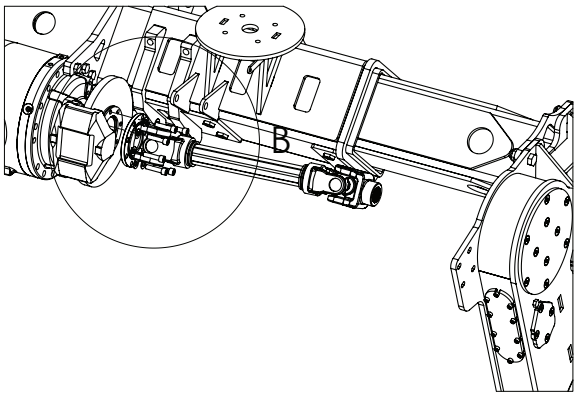

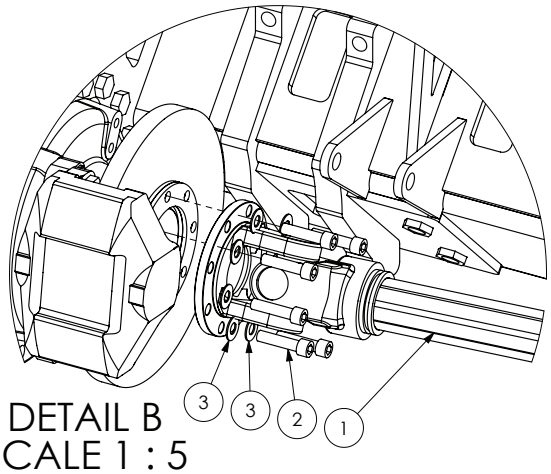

DETAIL B
SCALE 1 : 5

ITEM NO.	PART NUMBER	DESCRIPTION	QTY.
1	GA5071740	Drive Shaft Assembly, Double Yoke, 3m	2
2	GA5051470	SHCS M12 x 50	16
3	GA5000577	Washer 12mm Flat SS HD	16
4	GA4509800	Plate, Spacer 5mm, Drive Shaft	4

Axle Rear 2WD - Adjustable 3-4m - Diff Drain

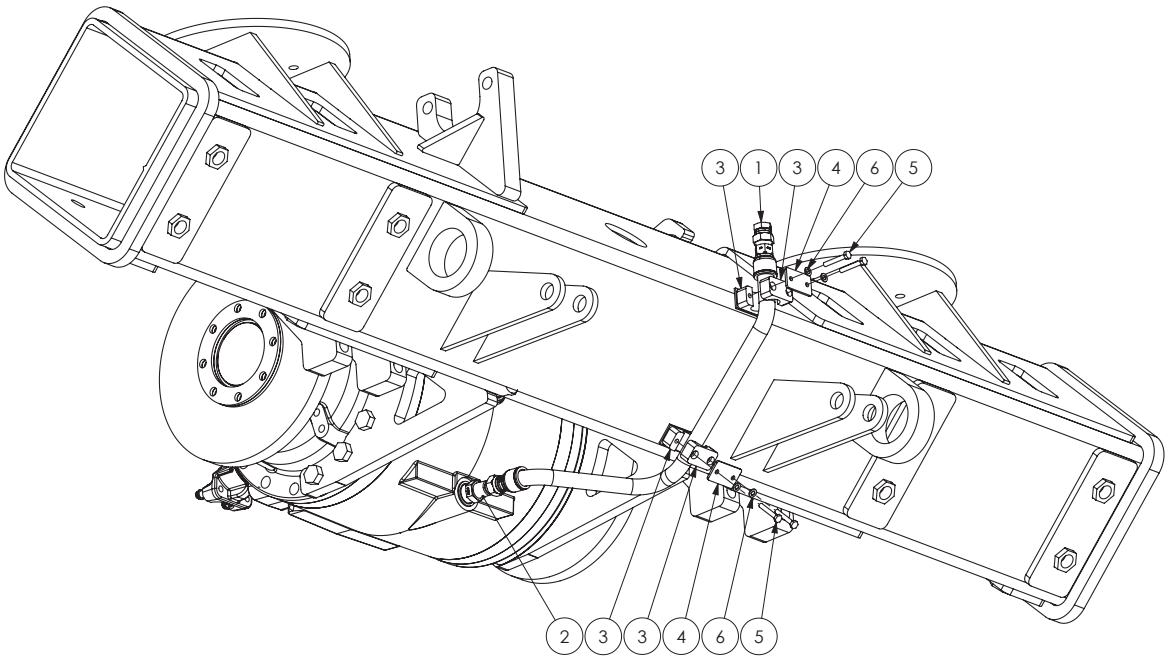

ITEM NO.	PART NUMBER	DESCRIPTION	QTY.
1	GA4913290	Hydraulic Hose, JCB Diff Drain / Fill, 3-4m	1
2	GA3500226	Hydraulic adaptor, Nipple, 3/4” BSPT male x 1/2” BSPT male	1
3	GA5078065	Mounting Clamp, Single type, Jaw, Pair, Group 3, 22mm	2
4	GA5078072	Single clamp plate top GR3	2
5	GA5004081	Bolt M6 x 40 GR8.8 ZP	4
6	GA5004437	Washer 6mm Flat SS	4

Axle Rear - Fixed & Adjust. 3-4m - Differential JCB

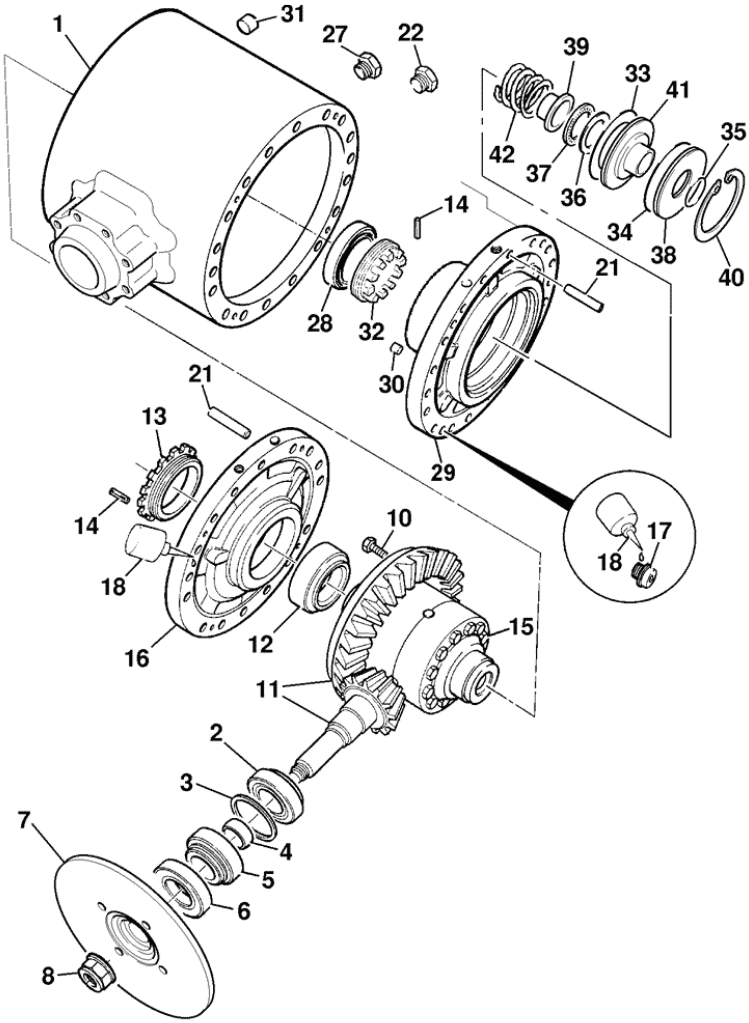

GA5071175 - Diff Centre, 3.36:1 ratio, soft engage diff, G4

INPUT SHAFT SEAL

PART NUMBER	DESCRIPTION
GA2700031	Seal, Input Pinion Shaft, JCB Diff

ITEM NO.	PART NUMBER (JCB)	DESCRIPTION	QTY.
1	458/20754	Casing drivehead soft engage difflock	1
2	907/09000	Bearing Roller	1
3	921/01900	Kit-shim	1
4	921/53400	Kit set of spacers From 12.625 To 14.200 Thick	1
5	907/M5375	Bearing taper roller	1
6	904/20172	Seal Triple Lip, To Suit 55.0/54.81 Shaft Brown	1
7	-	Not used	-
8	826/M7635	Nut Stake M30 x 2	1
10	826/01080	Bolt	20
11	458/20672	Gear crown wheel & pinion 11/37T	1

Continued over page

Axle Rear - Fixed & Adjust. 3-4m - Differential JCB

ITEM NO.	PART NUMBER (JCB)	DESCRIPTION	QTY.
12	907/51900	Bearing	1
13	458/20336	Nut side differential	1
14	826/01784	Pin tension	2
15	458/10382	Differential assembly PD70 soft engage	1
16	458/20342	Housing brake piston PD70 S-engage difflock	1
17	1391/3407	Capscrew M10 x 25mm	8
18	4102/1200	Sealant	1
21	826/00919	Dowel	4
22	816/M3848	Plug tapered, magnetic 3/4"BSP 14mm Drive	1
27	816/M3849	Plug tapered 3/4"BSP 14mm Drive	1
28	907/03800	Bearing	1
29	458/20341	Housing brake piston, PD70 S-engage difflock	1
30	816/80051	Plug 1/8" Tapered	1
31	816/80052	Plug Taper 1/4" BSP	2
32	454/09303	Nut adjusting	1
33	828/00337	O Ring	1
34	828/00338	O Ring	1
35	828/00339	O Ring	1
36	808/00329	Washer	1
37	907/51800	Bearing cylindrical roller	1
38	454/09302	Plate end	1
39	823/10396	Sleeve thrust	1
40	2203/1107	Circlip	1
41	458/20536	Piston	1
42	814/00421	Spring	1

Axle Rear - Driveshaft Assembly - Dromos

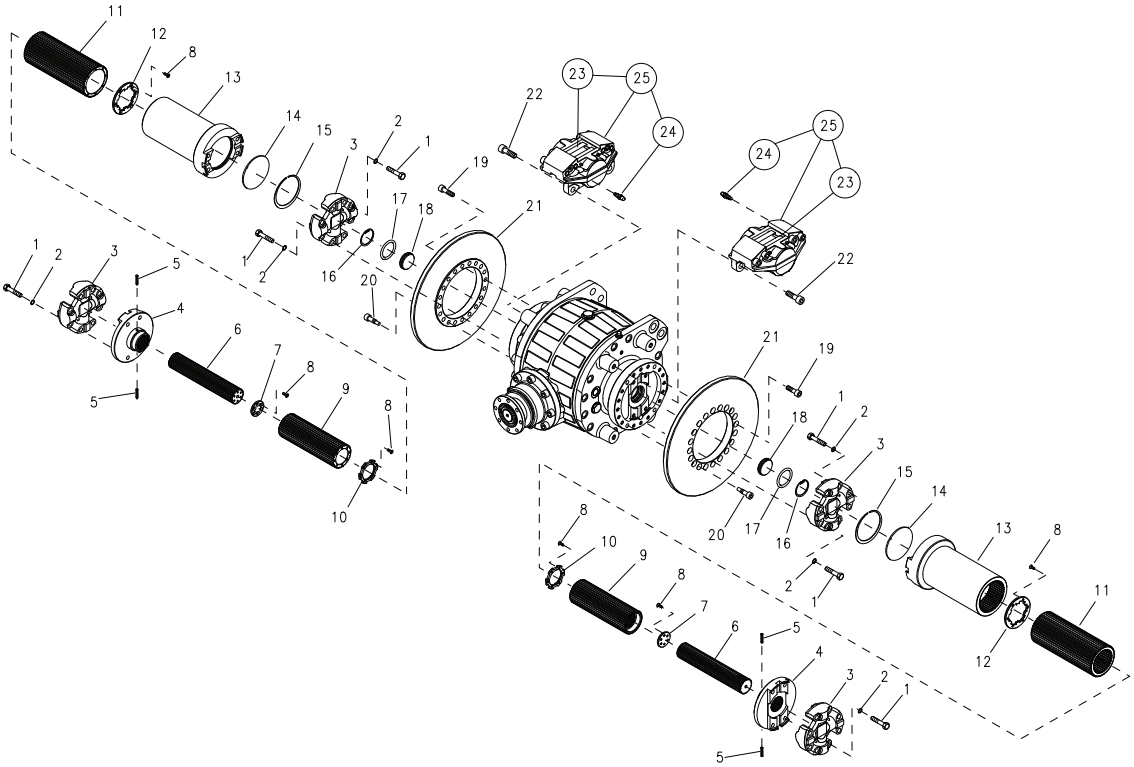

ITEM NO.	PART NUMBER	DESCRIPTION	QTY.
-	GA2700089	Differential assembly, 2-3m Adj. axle, Rear, No drive shafts, Dromos	-
-	GA5018907	Seal, 70 ID x 100 OD x 10 mm - Differential input	-
-	GA2700090	Driveshaft assembly, 2-3m Adj. axle, Rear, Dromos - Per side	-
1	001.090.1370.0	Hex head cap screw 1/2-20 UNFx2"1/4 ANSI B18.2.1 GR.8 10.9	24
2	001.122.0030.0	NOTCHED WASHER	24
3	GA5055885	Uni cross, Rear, Adjustable axle	4
4	GA5055890	Output flange, Driveshaft end, Rear, Adjustable axle	2
5	GA5055915	Spiral dowel pin, M6 x 30 DIN 7344, Adjustable drive shaft	4
6	GA4550475	Splined Shaft, 2-3m Inner	2
7	GA5055900	Plate, Inner spline retainer, Adjustable drive shaft	2
8	GA5051230	CSCS M5 x 16 SS A2-70	36
9	GA5055905	Driveshaft, Splined extension sleeve, Innermost drive shaft	2
10	012.480.0540.1	LOCK WASHER	2
11	GA5055910	Driveshaft, Splined extension sleeve, Middle, Adjustable drive shaft	2
12	012.480.0530.1	LOCK WASHER	2
19	001.091.0080.0	HEX. SKT. HD. CAP SCREW M12x40 UNI 5931 12.9	32
20	001.091.1320.0	HEX. SKT. HD. CAP SCREW / SCHOULDER diam.12 h8 -M10x25	8
21	GA5055875	Brake disc, Rear, Adjustable axle	2
22	001.091.0060.0	HEXAGON SOCKET HEAD CAP SCREW M16x45 Gr12.9	4
23	GA5055880	Brake pad kit, Rear, Adjustable axle	2
24	GA5073310	Bleeder Valve, M10x1, Brake Caliper, Stilfreni	2
25	GA5055895	Brake caliper, Rear, Adjustable axle	2

Axle Rear - Differential Assembly - Dromos

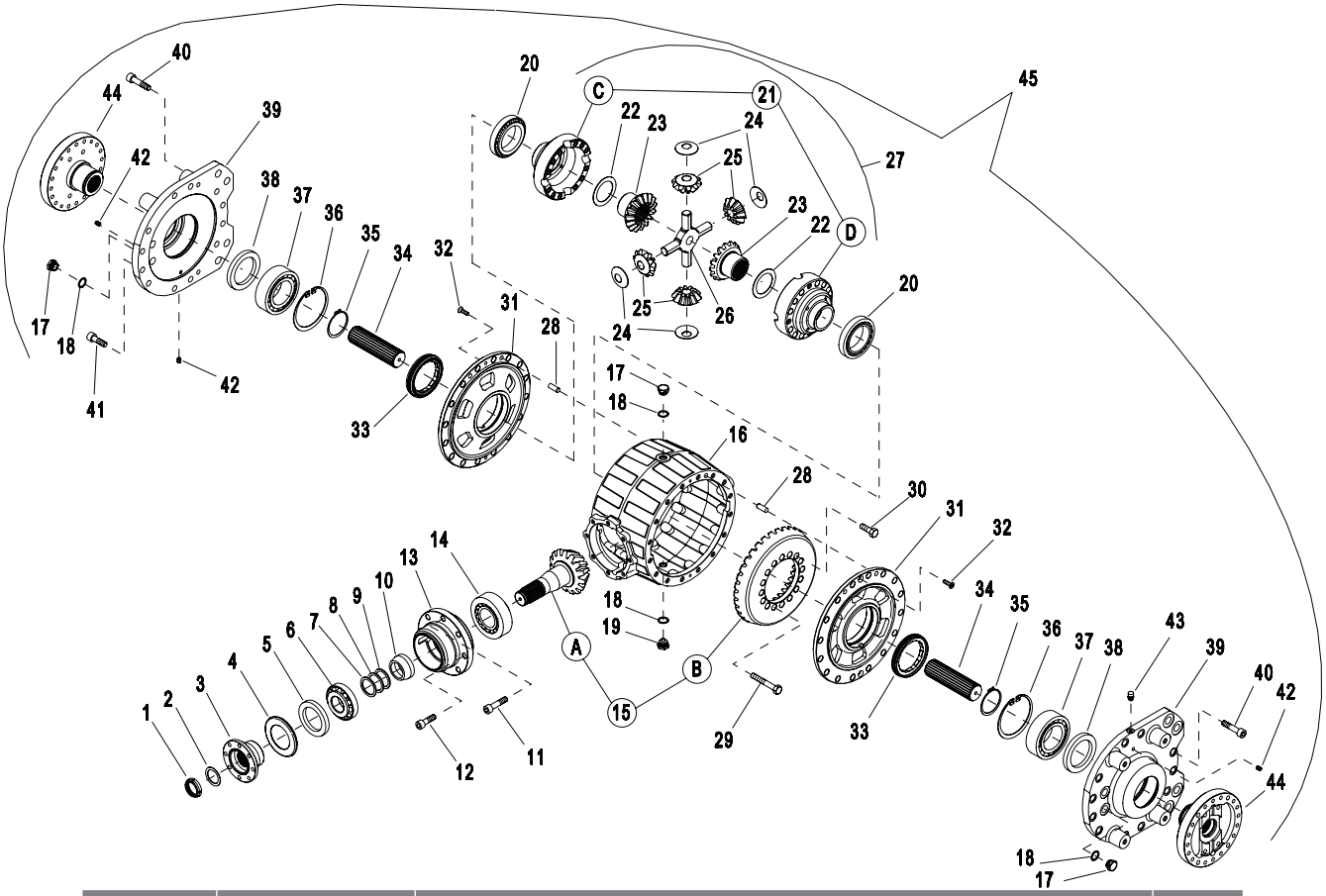

ITEM NO.	PART NUMBER	DESCRIPTION	QTY.
1	GA5078475	Ring nut	1
2	GA5078476	Thrust washer, 40x60x1 mm	1
3	GA5078477	Input flange	1
4	GA5078478	Oil seal, Input flange	1
5	GA5018907	Seal, 70 ID x 100 OD x 10 mm	1
6	GA5078479	Tapered bearing small, Input shaft	1
7	GA5078480	Shim, Input shaft, Top	2
8	GA5078481	Shim, Input shaft, Middle	4
9	GA5078482	Shim, Input shaft, Bottom	2
10	GA5078483	Spacer, Input shaft	1
11	001.091.0010.0	HEXAGON SOCKET HEAD CAP SCREW M14x45 UNI 5931 12.9	6
12	001.091.0020.0	HEXAGON SOCKET HEAD CAP SCREW M14x40 UNI 5931 12.9	2
13	012.141.0010.1	BEARING SUPPORT BUSH	1
14	GA5078484	Tapered bearing large, Input shaft	1
15	GA5078485	Bevel gear & pinion	1
16	012.121.0190.1	CENTRAL CASING	1
17	GA5078486	Fill plug, M22 x 1.5	3
18	GA5073435	Washer, Copper Gasket, 22 x 28 x 1.5	4

Continued over page

Axle Rear - Differential Assembly - Dromos

ITEM NO.	PART NUMBER	DESCRIPTION	QTY.
19	GA5073445	Plug, Drain, Magnetic, M22 x 1.5, Drop Leg, Rear	1
20	GA5078487	Tapered bearing, Differential unit	2
21	808.020.0020.0	DIFFERENTIAL UNIT	1
22	012.300.0230.1	CROWN WHEEL SUPPORT RING	2
23	012.262.0020.1	BEVEL PLANETARY GEAR	2
24	012.300.0020.1	DIFFERENTIAL PLANETARY SUPPORT RING	4
25	012.262.0010.1	BEVEL PLANETARY GEAR	4
26	012.271.0010.1	CROSS	1
27	GA5078488	Differential unit	1
28	001.132.0210.0	PARALLEL PIN A 12x36 UNI EN ISO 8734 Ref.: -	2
29	001.090.0030.0	HEXAGON HEAD CAP SCREW M16x1,5x100 UNI 5738 10.9	12
30	001.090.0040.0	HEXAGON HEAD CAP SCREW M16x1,5x45 UNI 5740 10.9	4
31	012.121.0020.1	DIFFERENTIAL SUPPORT	2
32	001.092.0010.0	HEXAG. SOCKET COUNTERSUNK FLAT HEAD CAP SCREW M8x25 UNI 5933 10.9 Ref.: -	4
33	GA5078489	Ring nut	2
34	GA5078490	Drive shaft, Output	2
35	001.070.0040.0	RETAINING RING E 70 UNI 7435 Ref.: -	2
36	001.071.0340.0	RETAINING RING I 125 UNI7437 Ref.: -	2
37	GA5078491	Bearing, Double row, Angular contact	2
38	GA5078492	Oil seal, 80x110x10 mm	2
39	012.010.8490.1	SUPPORT	23
40	001.091.0070.0	HEXAGON SOCKET HEAD CAP SCREW M16x60 UNI 5931 12.9	1
41	001.091.0060.0	HEXAGON SOCKET HEAD CAP SCREW M16x45 UNI 5931 12.9	3
42	001.150.0020.0	CONICAL PLUG HEXAGON SOCKET HEAD CAP M10x1 DIN 906 5.8 Ref.: -	1
43	001.152.0080.0	CONICAL BREATHER PLUG WITHOUT VALVE M10x1 cod. 130100038 - mod. 30B Ref.: NOSTRALI	2
44	012.230.1200.1	TRANSMISSION FLANGE	1

Propeller Shafts & Mount - 2WD

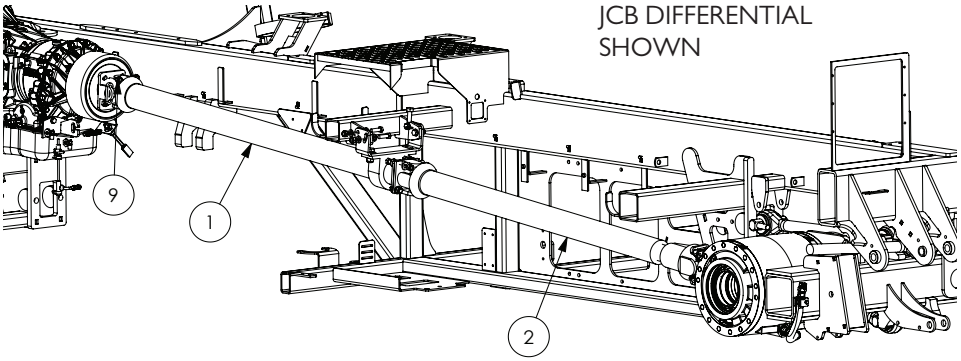

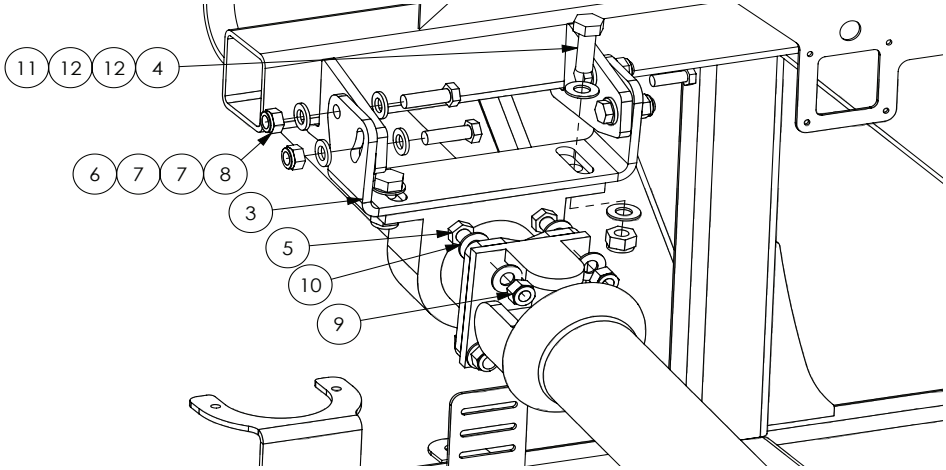

2WD DRIVE SHAFT SPARE PARTS

PART NUMBER	DESCRIPTION	QTY.
GA5017113	Uni Joint kit 1480 series - Dromos Differential	3
	Uni Joint kit 1480 series - JCB Differential	2
GA5017115	Uni Joint kit 1550 series - JCB Differential	1

ITEM NO.	PART NUMBER	DESCRIPTION	QTY.
1	GA5070932	Driveshaft, Centre Bearing Shaft, Allison Transmission and JCB Diff, G3 G4 Series	1
	GA5007003	Centre Bearing Assembly, 40mm ID, Slotted Rubber, Standard Duty, G4 G6	
2	GA5070933	Driveshaft - JCB Diff	1
	GA2700032	Driveshaft - Dromos	
3	GA4536225	Mount, Centre Bearing Plate	1
4	GA5000343	Bolt M14 x 45 ZP GR8.8	2
5	GA5051295	Bolt 1/2” UNF x 2” GR8 ZP	4
6	GA5000319	Bolt M12 x 40 Gr8.8 ZP	4
7	GA5000577	Washer 12mm SS HD	8
8	GA5012461	Nut M12 Nyloc ZP	4
9	GA5049605	Nut 1/2" UNF Nyloc	8
10	GA5017661	Washer 1/2” Flat ZP	8
11	GA5012427	Nut M14 Nyloc	2
12	GA5066235	Washer 14mm HD ZP	4

Propeller Shafts & Mount - 4WD

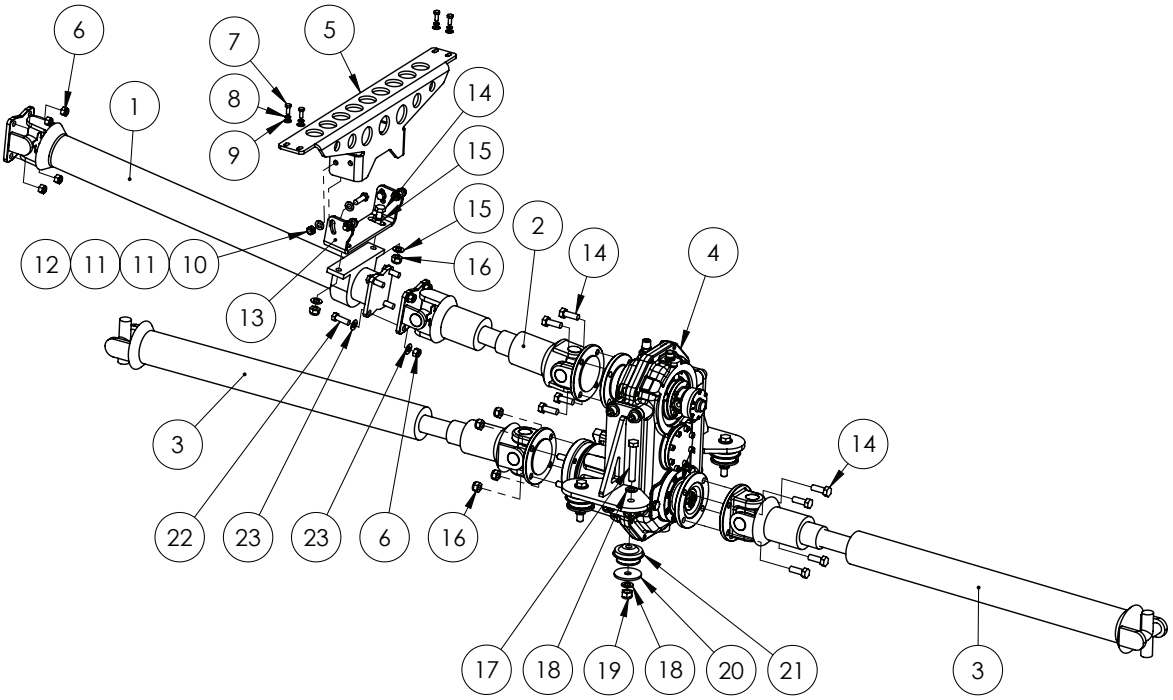

4WD DRIVE SHAFT SPARE PARTS

PART NUMBER	DESCRIPTION	QTY.
GA5017113	Uni Joint kit 1480 series	5
GA5017115	Uni Joint kit 1550 series - JCB Differential	2

ITEM NO.	PART NUMBER	DESCRIPTION	QTY.
1	GA2700076	Drive Shaft, Transmission To Centre Bearing	1
2	GA2700077	Drive Shaft, Centre Bearing To Transfer Case	1
3	GA2700078	Drive Shaft, Transfer Case to Diff Centre, Front and Rear	2
4	*	Transfer case - 4WD	1
5	GA4402885	Plate, Cross Member, Centre Bearing Mount	1
6	GA5050580	Nut 1/2" UNC Nyloc ZP	8
7	GA5004085	Bolt M8 x 20 GR8.8 ZP	12
8	GA5004919	Washer 8mm Spring SS	4
9	GA5003643	Washer 8mm Flat SS HD	4
10	GA5012461	Nut M12 Nyloc ZP	4
11	GA5000577	Washer 12mm Flat SS HD	8
12	GA5000319	Set Screw M12 x 40 GR8.8 ZP	4
13	GA4536225	Mount Centre Bearing Plate	1
14	GA0500076	Bolt, M14 x 1.5 x 40, ZP, Gr10.9	10
15	GA5066235	Washer 14mm HD ZP Yellow	4
16	GA5012427	Nut M14 Nyloc ZP	6
17	GA5011269	Bolt M16 x 100 GR8.8 ZP	4
18	GA5001043	Washer 16mm Flat SS HD	8
19	GA5001029	Nut M16 Nyloc ZP	4
20	GA4502820	Washer, 70mm OD x 16.5mm ID x 5mm thick	4

* Sub-assembly shown on following pages

Continued over page

Propeller Shafts & Mount - 4WD

ITEM NO.	PART NUMBER	DESCRIPTION	QTY.
21	GA5070020	Vibration Isolator - 80mm	4
22	GA5006167	Bolt 1/2" UNC x 1 1/2" GR8 ZP	4
23	GA5017673	Washer 1/2" High Tensile	8

Propeller Shaft Mounting - 2WD - Dromos

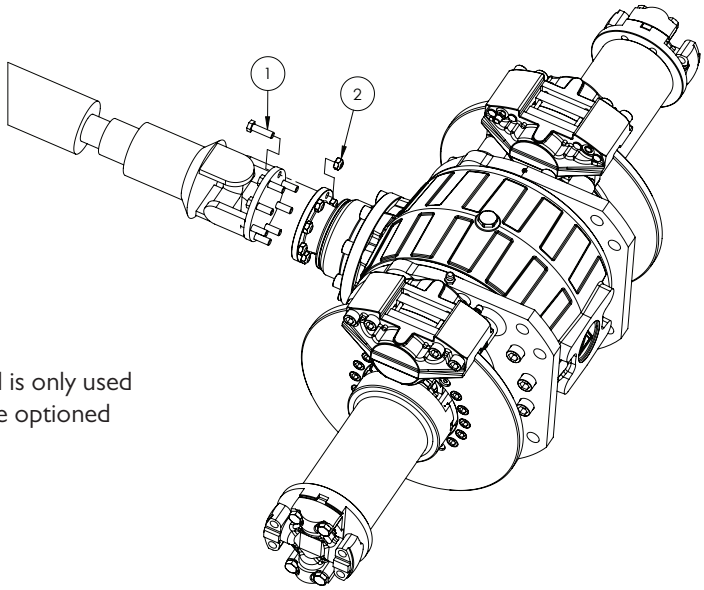

NOTE: This differential is only used on 2-3m adjustable axle optioned machines.

ITEM NO.	PART NUMBER	DESCRIPTION	QTY.
1	GA5065455	Bolt M10 x 30 GR8.8 ZP	8
2	GA0500069	Nut, M10, ConeLock, ZP	8

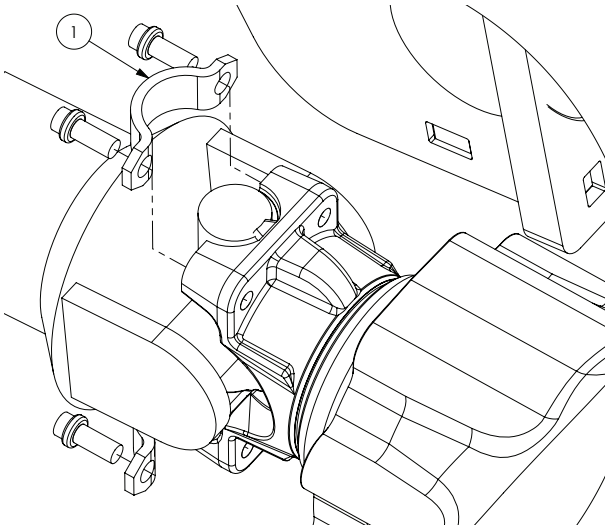

ITEM NO.	PART NUMBER	DESCRIPTION
1	GA5072070	Strap Kit, Drive Shaft Universal Mount, G3 G4

Transfer Case - 4WD

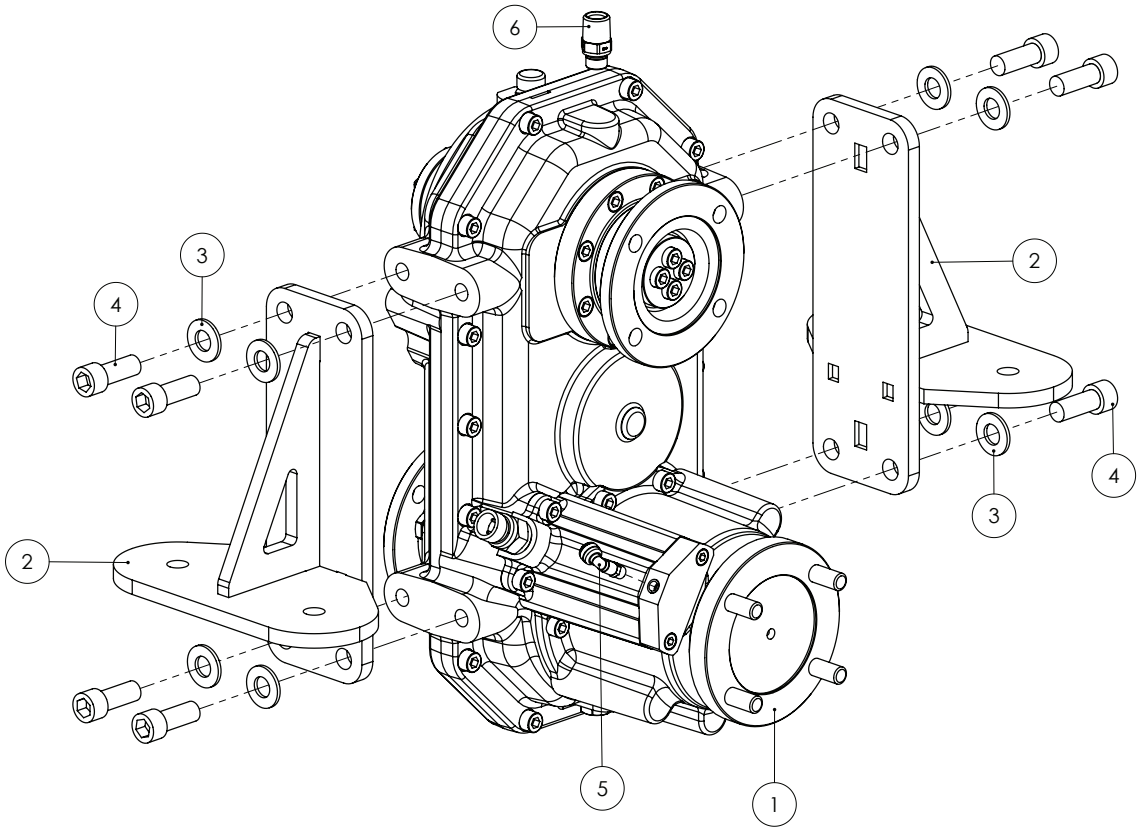

ITEM NO.	PART NUMBER	DESCRIPTION	QTY.
1	GA2700069	Transfer Case	1
2	GA4661795	Transfer Case Mount	2
3	GA5001043	Washer 16mm Flat SS HD	8
4	GA5000925	SHCS M16 x 40 GR12.9 ZP	8
5	GA5045145	Elbow, swivel, push in 6mm, Brass 1/8” BSPT	1
6	GA3500309	Hydraulic adaptor, Nipple, 1/2” BSPT male x 3/8” BSPP male	1

Suspension Front - Shock Absorber

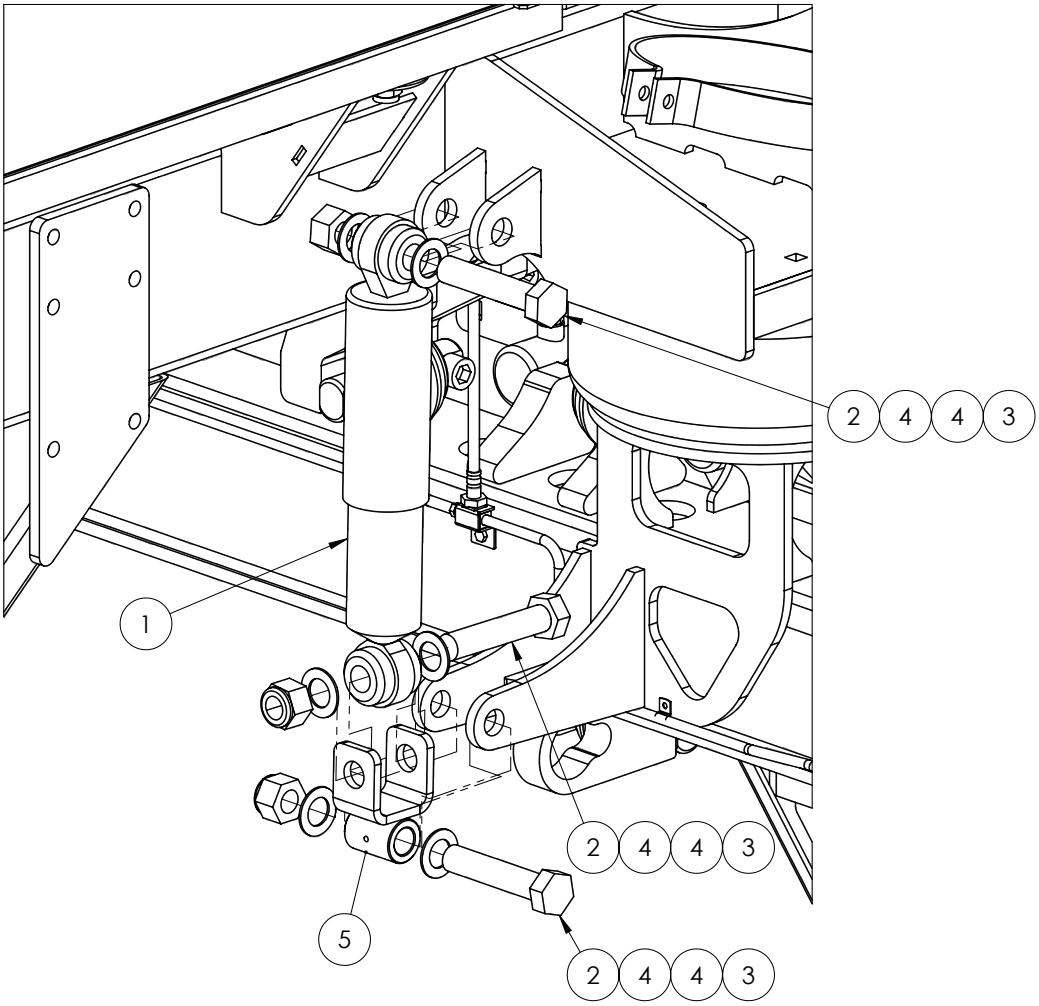

ITEM NO.	PART NUMBER	DESCRIPTION	QTY.
1	GA2500000	Shock Absorber, Double eye, 24mm eye, 80mm OD, Red	2
2	GA5011346	Bolt M24 x 115 GR8.8 ZP Special 75 to 77mm shank	6
3	GA5012469	Nut M24 Nyloc ZP	6
4	GA5001891	Washer 24mm Flat HD SS	12
5	GA4660670	Shock Absorber Mount, Front Axle	2

Suspension Front - Torque Rods - Fixed Axle

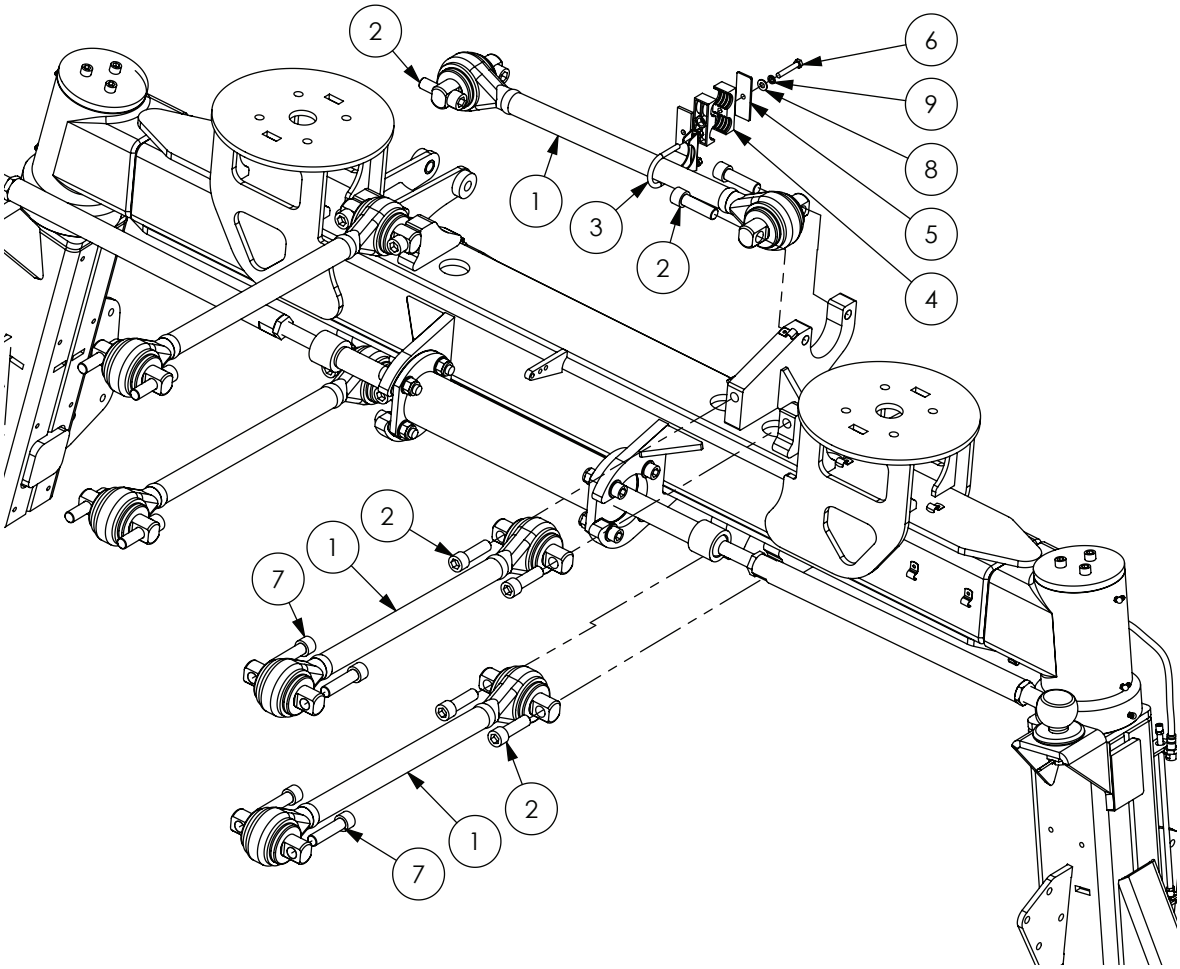

ITEM NO.	PART NUMBER	DESCRIPTION	QTY.
1	GA5068850	Suspension link, Torque rod, 650mm centre, Hollow	5
2	GA5053145	SHCS 3/4" UNF x 2 1/2" GR12.9 ZP Blue	12
3	GA4659840	Steering Hose to Panhard Mount	1
4	GA5078038	Double Clamp Jaws 28mm	2
5	GA5078049	Mounting clamp, Double type, Plate, Top, Group 4	1
6	GA5004727	Bolt M8 x 50 GR8.8 ZP	1
7	GA5053150	SHCS 3/4" UNF x 3" GR12.9 ZP Blue	8
8	GA5003643	Washer 8mm Flat SS HD	1
9	GA5004919	Washer 8mm Spring SS	1

Suspension Front - Torque Rods - Adjustable Axle

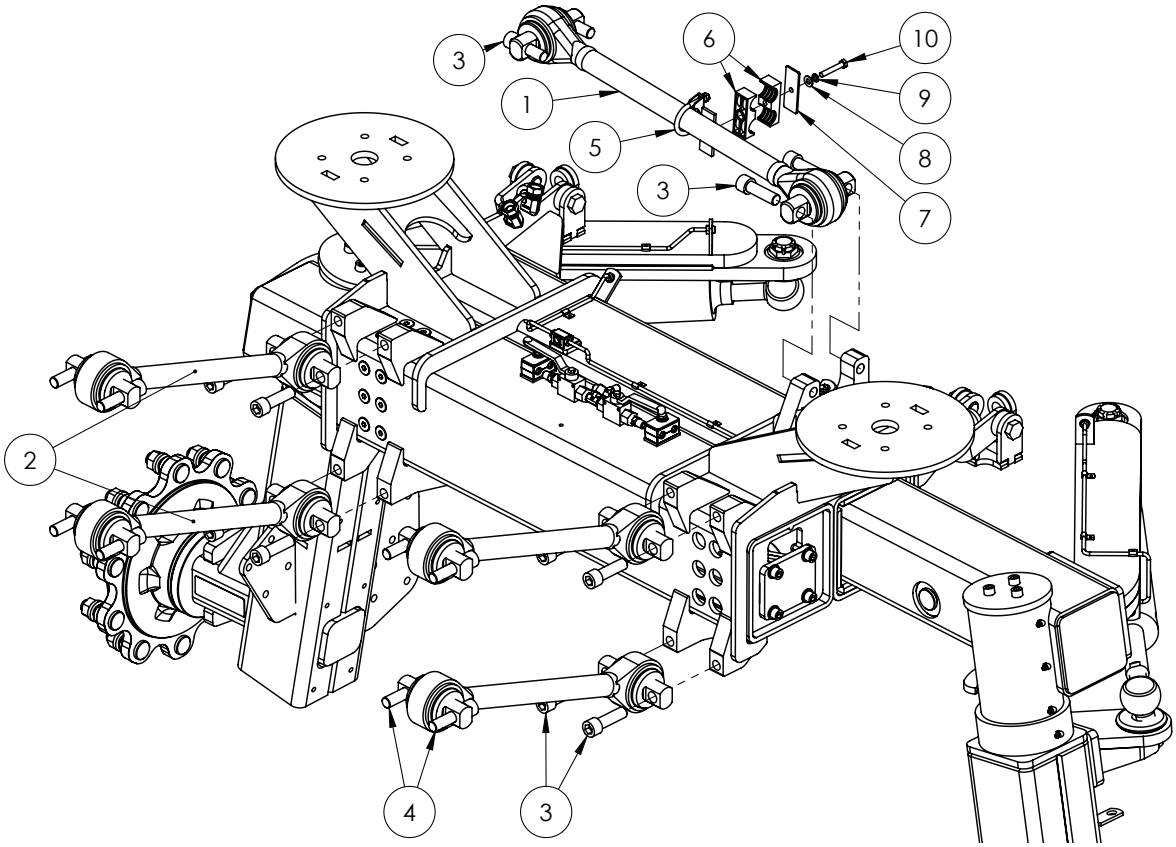

ITEM NO.	PART NUMBER	DESCRIPTION	QTY.
1	GA5068850	Suspension link, Torque rod, 650mm centre, Hollow	1
2	GA5068852	Suspension link, Torque rod, 500mm centre, Hollow	4
3	GA5053145	SHCS 3/4" UNF x 2 1/2" GR12.9 ZP Blue	12
4	GA5053150	SHCS 3/4" UNF x 3" GR12.9 ZP Blue	8
5	GA4659840	Steering Hose to Panhard Mount	1
6	GA5078038	Double Clamp Jaws 28mm	2
7	GA5078049	Mounting clamp, Double type, Plate, Top, Group 4	1
8	GA5003643	Washer 8mm Flat SS HD	1
9	GA5004919	Washer 8mm Spring SS	1
10	GA5004727	Bolt M8 x 50 GR8.8 ZP	1

Suspension Front - Torque Rods - Parts & Tool

PANHARD ROD SHIMS

PART NUMBER	DESCRIPTION
GA4537165	Panhard shim 1mm
GA4537170	Panhard shim 3mm
GA4537175	Panhard shim 5mm

TORQUE ROD SHIMS

PART NUMBER	DESCRIPTION
GA4505076	Shim 1mm
GA4505075	Shim 5mm

SUSPENSION SPARE PARTS

PART NUMBER	DESCRIPTION
GA5069825	Bush, Suspension link end replacement, 3/4” bolt holes, TS38750, ATRO
GA5053450	Rubber insert, suit shock absorber

BUSH TOOL

PART NUMBER	DESCRIPTION
PT59-59100 / PT00-52100	Atro bush tool

Suspension Front - Air Bag

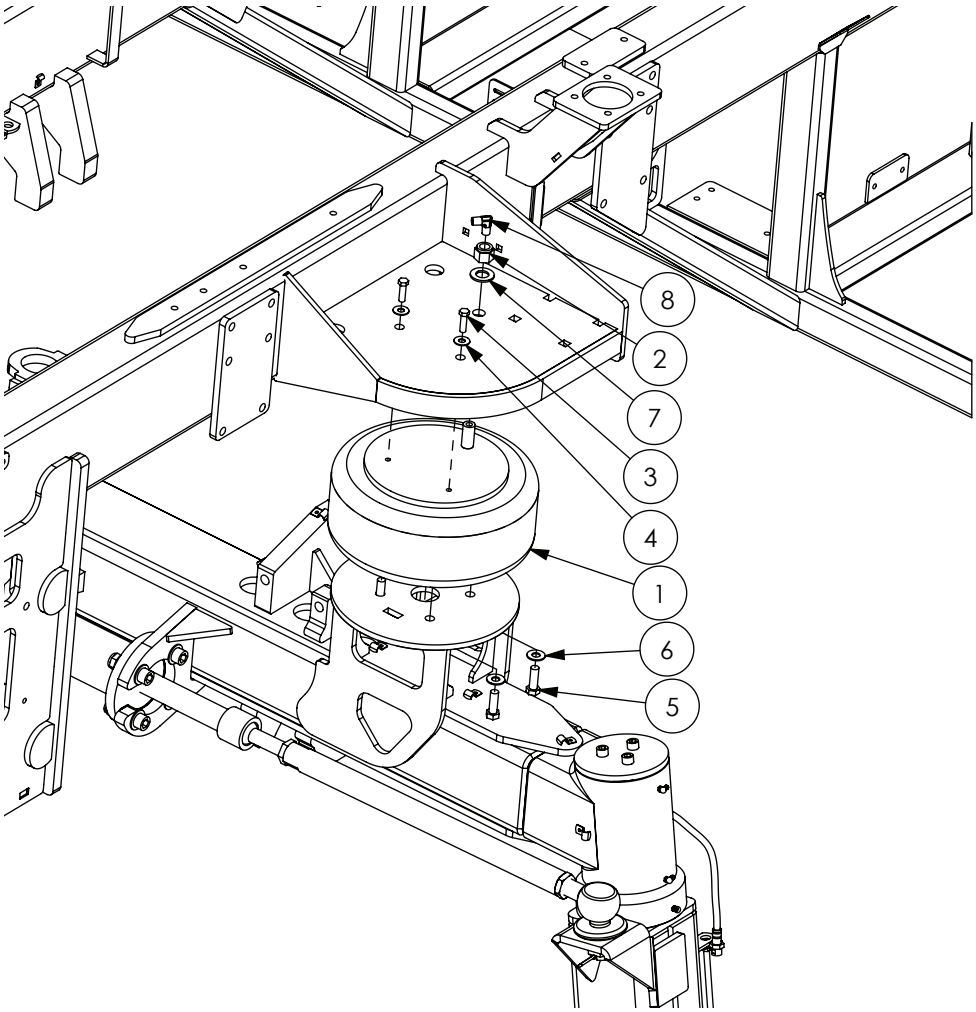

ITEM NO.	PART NUMBER	DESCRIPTION	QTY.
1	GA5005311	Air spring, HT230 single air stud	2
2	GA5049495	Nut 3/4" UNF Nyloc	2
3	GA5002599	Bolt 3/8” UNC x 1 1/4” SS	4
4	GA5002565	Washer 3/8” x 1" Flat SS	4
5	GA5068715	Bolt 1/2" UNC x 1 1/2" GR8 ZP	8
6	GA5017661	Washer 1/2” Flat ZP	8
7	GA5001741	Washer 20mm Flat SS HD	2
8	GA3500258	Hydraulic coupling, Elbow, 90 degree, 1/4” BSPT male x 1/4” BSPT male	2

Suspension Rear

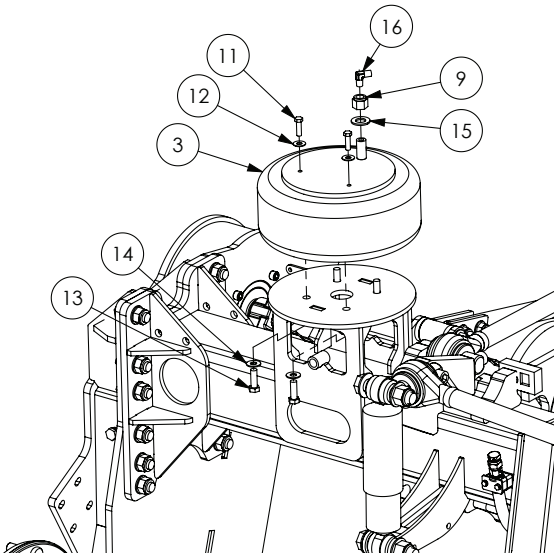

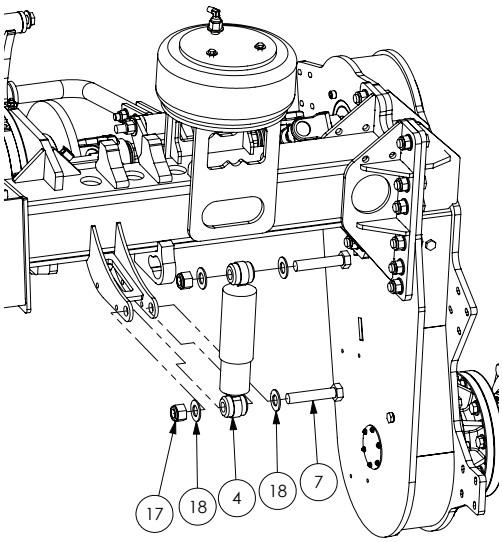

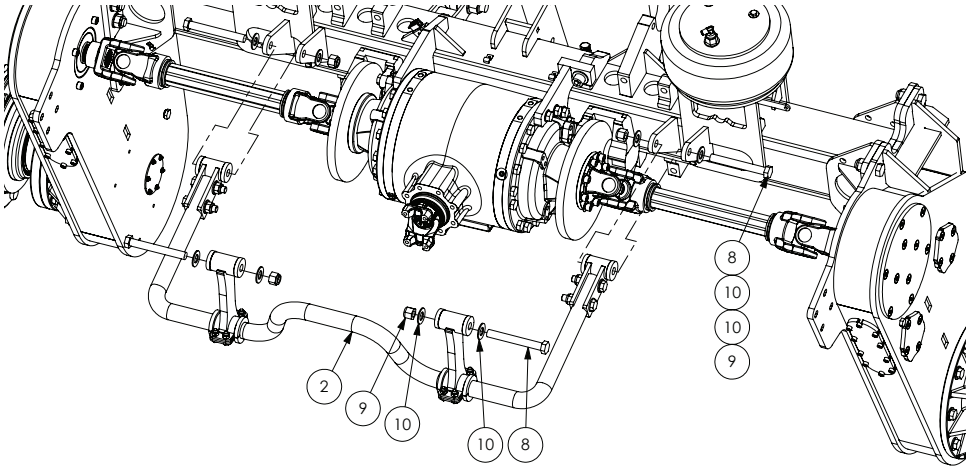

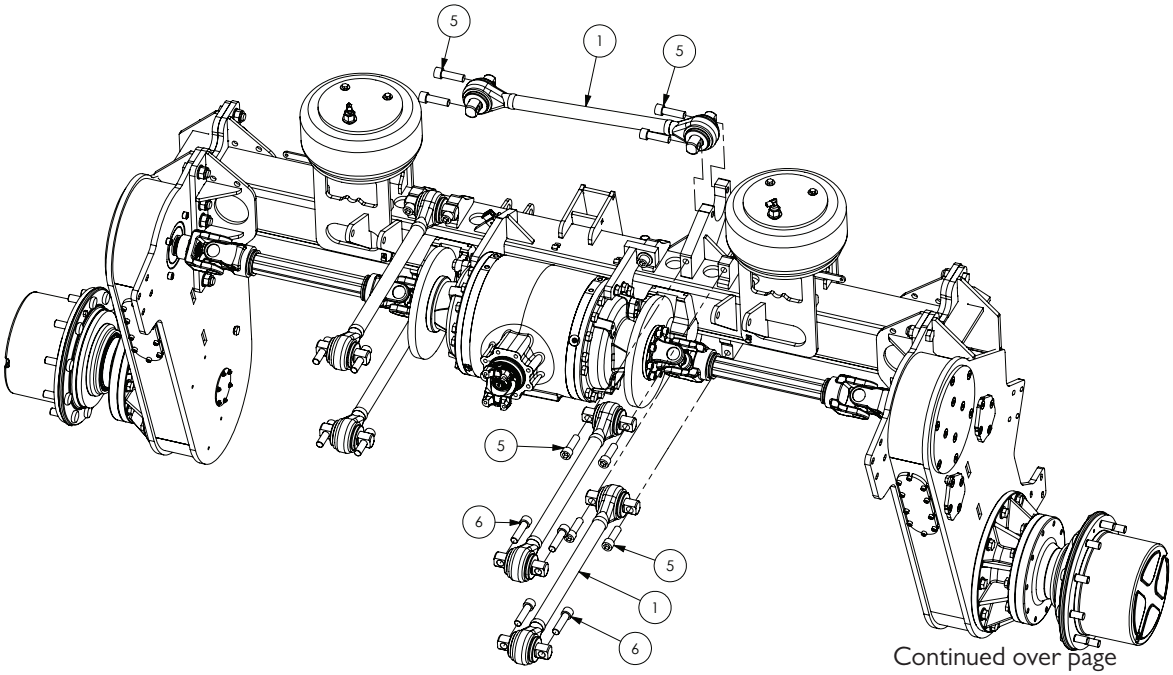

Continued over page

Suspension Rear

ITEM NO.	PART NUMBER	DESCRIPTION	QTY.
1	GA5068850	Suspension link, Torque rod, 650mm centre, Hollow	5
2	*	Sway Bar assembly	1
3	GA5005311	Air spring, HT230 single air stud	2
4	GA2500000	Shock Absorber, Suspension Damper, Yellow, Monroe	2
5	GA5053145	SHCS 3/4" UNF x 2 1/2" GR12.9 ZP Blue	12
6	GA5053150	SHCS 3/4" UNF x 3" GR12.9 ZP Blue	10
7	GA5011346	Bolt M24 x 115 GR8.8 ZP Special 75 to 77mm shank	4
8	GA5002487	Bolt 3/4” UNC x 6”	4
9	GA5048430	Nut 3/4” UNC Nyloc ZP	6
10	GA5001045	Washer 3/4” ZP Comm Flat	8
11	GA5002599	Bolt 3/8” UNC x 1 1/4” SS	4
12	GA5002565	Washer 3/8” x 1" Flat SS	4
13	GA5068715	Bolt 1/2" UNC x 1 1/2" GR8 ZP	8
14	GA5017661	Washer 1/2” flat ZP	8
15	GA5001741	Washer 20mm Flat SS HD	2
16	GA3500258	Hydraulic coupling, Elbow, 90 degree, 1/4” BSPT male x 1/4” BSPT male	2
17	GA5012469	Nut M24 Nyloc ZP	4
18	GA5017681	Washer 1" Flat SS	8

* Sub-assembly shown on following pages

PANHARD ROD SHIMS

PART NUMBER	DESCRIPTION
GA4537165	Panhard shim 1mm
GA4537170	Panhard shim 3mm
GA4537175	Panhard shim 5mm

TORQUE ROD SHIMS

PART NUMBER	DESCRIPTION
GA4505076	Shim 1mm
GA4505075	Shim 5mm

SUSPENSION SPARE PARTS

PART NUMBER	DESCRIPTION
GA5069825	Bush, Suspension link end replacement, 3/4” bolt holes, TS38750, ATRO
GA5053450	Rubber insert, suit shock absorber

BUSH TOOL

PART NUMBER	DESCRIPTION
PT59-59100 / PT00-52100	Atro bush tool

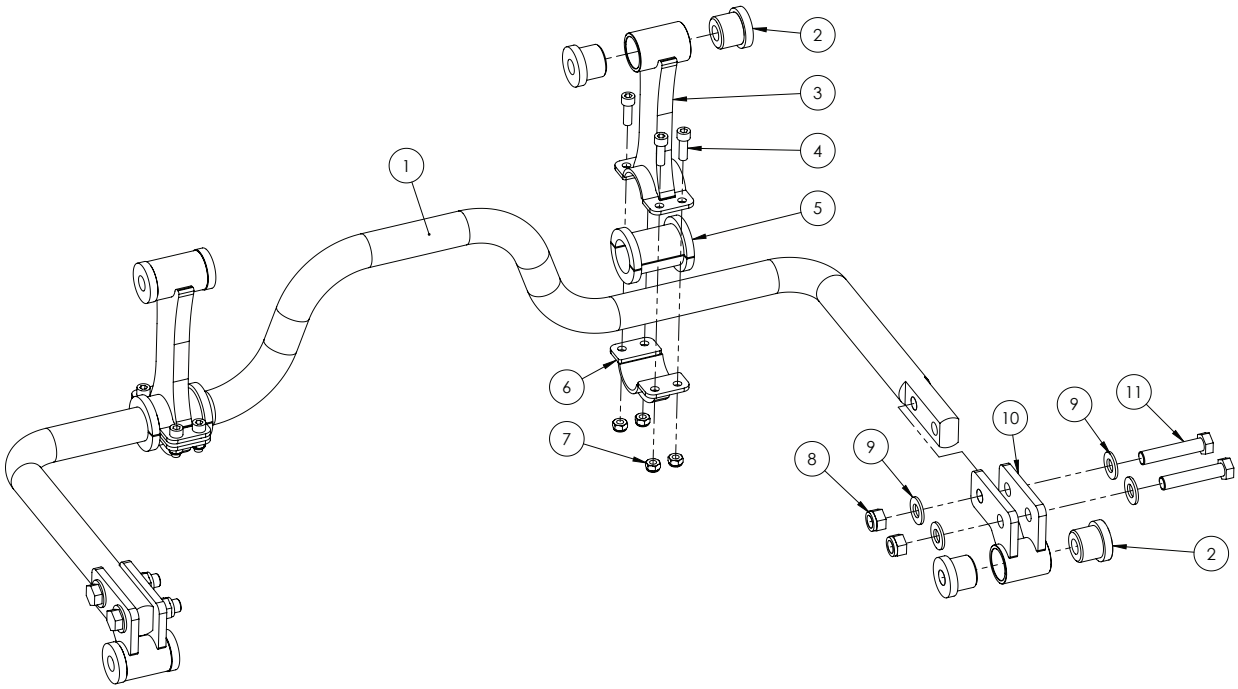

ITEM NO.	PART NUMBER	DESCRIPTION	QTY.
1	GA5016192	Rear Swaybar, 42mm	1
2	GA5016195	Bush, Sway bar pivot, Pigthane 90A duro	8
3	GA4654805	Clamp, Upper, Sway bar, Crop Cruiser	2
4	GA5006129	SHCS M10 x 30 GR12.9 ZP	8
5	GA4583285	Nylon Bush for Sway Bar, 42mm (This part comes in two halves)	2
6	GA4654800	Clamp, Lower, Sway bar, Crop Cruiser	2
7	GA5000141	Nut M10 Nyloc ZP	8
8	GA5001029	Nut M16 Nyloc ZP	4
9	GA5001043	Washer 16mm Flat SS HD	8
10	GA4659295	Offset Swaybar End	2
11	GA5011307	Bolt M16 x 80 ZP GR8.8	4

Suspension Rear - Sway Bar Assembly - 3m

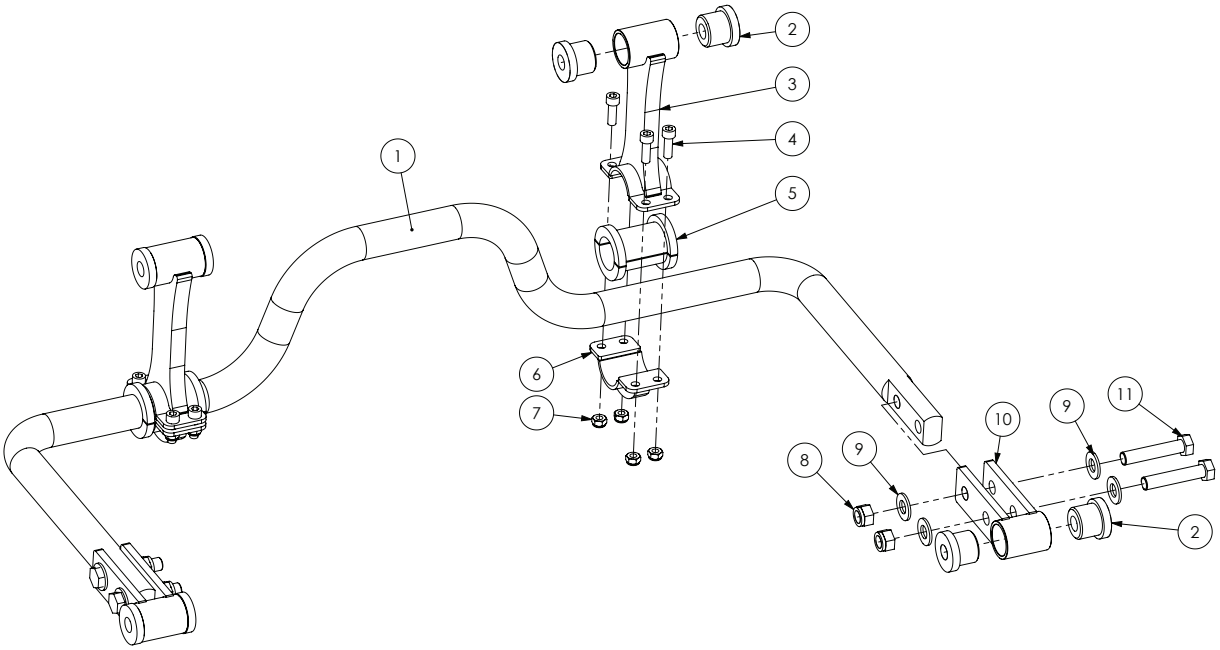

ITEM NO.	PART NUMBER	DESCRIPTION	QTY.
1	GA5016192	Rear Swaybar, 42mm	1
2	GA5016195	Bush, Sway bar pivot, Pigthane 90A duro	8
3	GA4654805	Clamp, Upper, Sway bar, Crop Cruiser	2
4	GA5006129	SHCS M10 x 30 GR12.9 ZP	8
5	GA4583285	Nylon Bush for Sway Bar, 42mm (This part comes in two halves)	2
6	GA4654800	Clamp, Lower, Sway bar, Crop Cruiser	2
7	GA5000141	Nut M10 Nyloc ZP	8
8	GA5001029	Nut M16 Nyloc ZP	4
9	GA5001043	Washer 16mm Flat SS HD	8
10	GA4654790	Mounting, swaybar to axle	2
11	GA5011307	Bolt M16 x 80 ZP GR8.8	4

Suspension - Ride Height Valve - Front Fixed

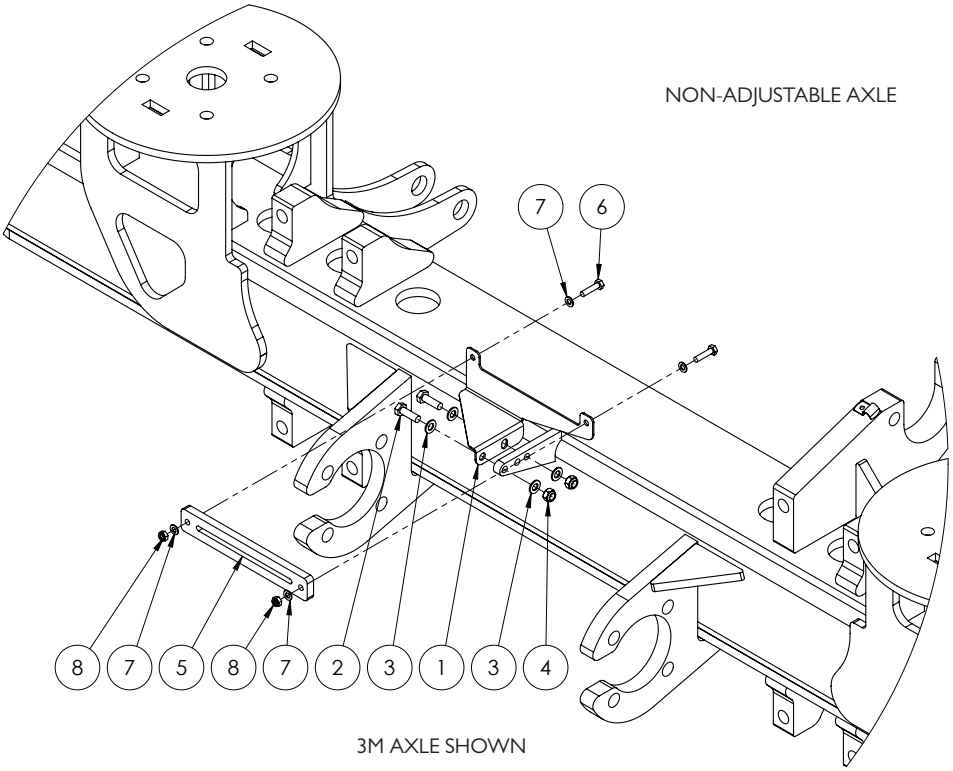

ITEM NO.	PART NUMBER	DESCRIPTION	QTY.
-	GA5010868*	Ride height valve, air suspension, with 1/4" connecting rods and joints	1
-	GA3500218	Hydraulic adaptor, Nipple, 1/4” BSPT male x 1/4” BSPT male	3
-	GA3500258	Hydraulic coupling, Elbow, 90 degree, 1/4” BSPT male x 1/4” BSPT male	2
-	GA5017669	Washer 1/4" Flat SS	2
1	GA4402640	Plate, Rod Guide Mount, Ride Height Valve, Front Fixed Axle	1
2	GA5004711	Bolt M8 x 25 GR8.8 ZP	2
3	GA5003643	Washer 8mm Flat SS HD	4
4	GA5052590	Nut M8 Nyloc SS	2
5	GA4550975	Rod Guide, Ride Height Valve, Front Axle	1
6	GA5004073	Bolt M6 x 25 GR8.8 ZP	2
7	GA5004437	Washer 6mm Flat SS	4
8	GA5048115	Nut M6 Nyloc ZP	2

* NOTE: Part number GA5010868 comes with ride height valve and all connecting rods,rubber tees, split pins, washers, nuts and clamps. Some items cannot be supplied separately.

Suspension - Ride Height Valve - Front 2-3m

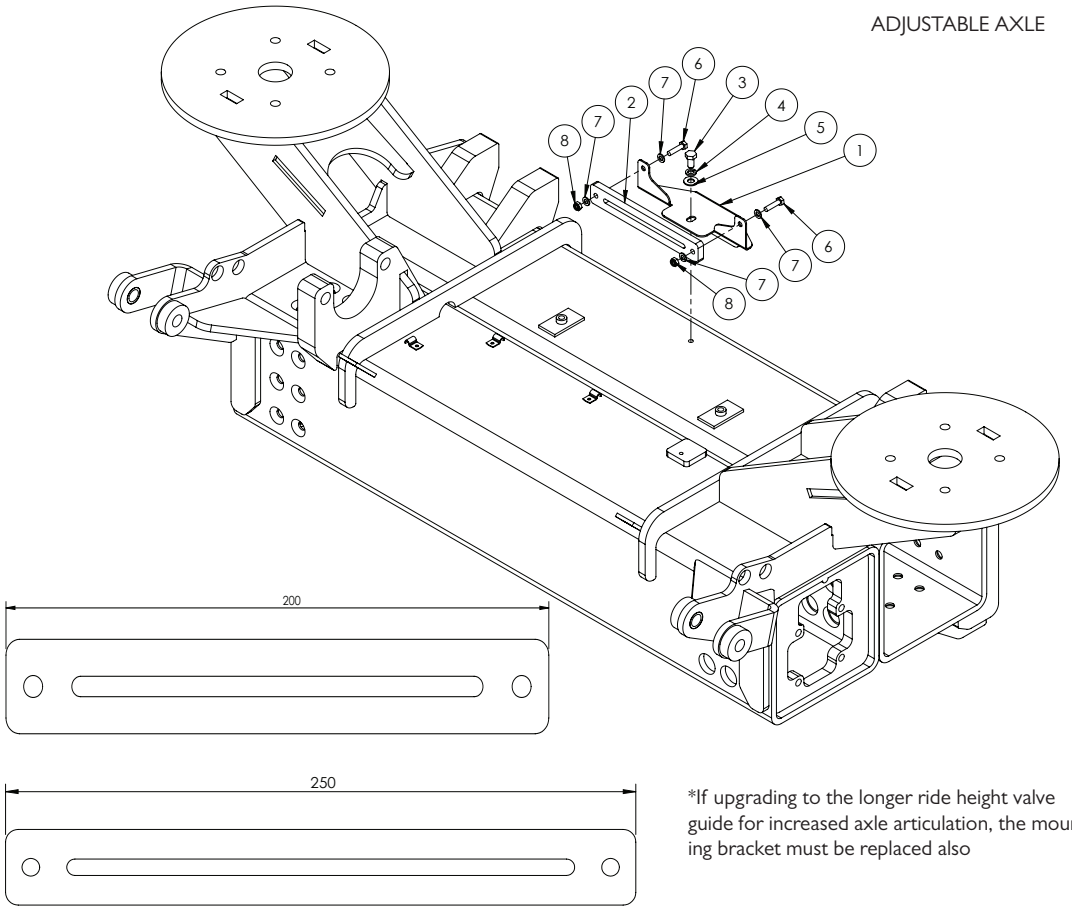

*If upgrading to the longer ride height valve guide for increased axle articulation, the mounting bracket must be replaced also

ITEM NO.	PART NUMBER	DESCRIPTION	QTY.
-	GA5010868*	Ride height valve, air suspension, with 1/4" connecting rods and joints	1
-	GA3500218	Hydraulic adaptor, Nipple, 1/4” BSPT male x 1/4” BSPT male	3
-	GA3500258	Hydraulic coupling, Elbow, 90 degree, 1/4” BSPT male x 1/4” BSPT male	2
-	GA5017669	Washer 1/4" Flat SS	2
1	GA4402645	Plate, Rod Guide Mount, Ride Height Valve, Suit 200mm Guide	1
	*GA4410725	Plate, Rod Guide Mount, Ride Height Valve, Suit 250mm Guide	
2	GA4550975	Rod Guide, Ride Height Valve, Front Axle, 200mm	1
	*GA4551725	Rod Guide, Ride Height Valve, Front Axle, 250mm	
3	GA5004693	Set Screw M8 x 16 GR8.8 ZP	1
4	GA5004919	Washer 8mm Spring SS	1
5	GA5003643	Washer 8mm Flat SS HD	1
6	GA5004073	Bolt M6 x 25 GR8.8 ZP	2
7	GA5004437	Washer 6mm Flat SS	4
8	GA5048115	Nut M6 Nyloc ZP	2

* NOTE: Part number GA5010868 comes with ride height valve and all connecting rods,rubber tees, split pins, washers, nuts and clamps. Some items cannot be supplied separately.

Suspension - Ride Height Valves - Rear

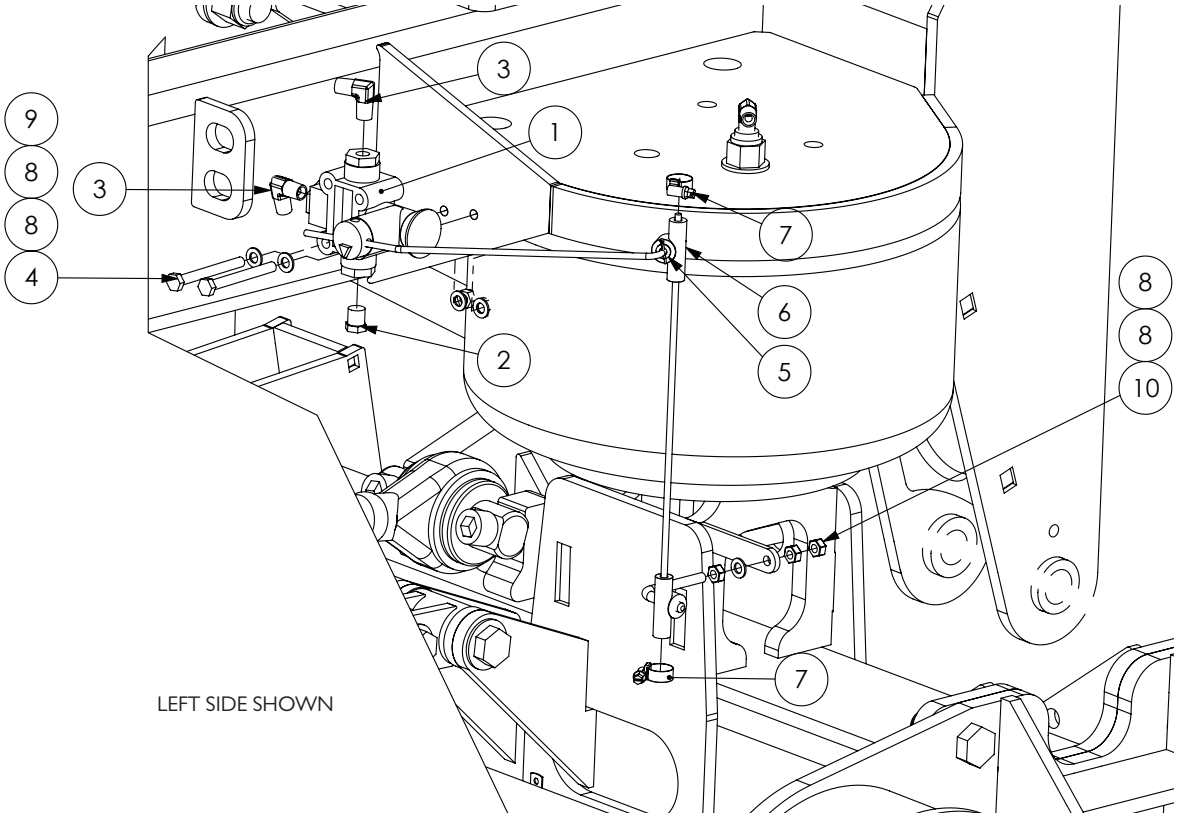

Quantities shown are per side.

ITEM NO.	PART NUMBER	DESCRIPTION	QTY.
1	GA5010868*	Ride height valve, with 1/4" connecting rods and joints	1
2	GA5069335	Plug, 1/4" BSPT male thread, Brass	1
3	GA3500258	Hydraulic coupling, Elbow, 90 degree, 1/4” BSPT male x 1/4” BSPT male	2
4	GA5004738	Bolt M8 x 70 GR8.8 ZP	2
5	GA5017669	Washer 1/4" Flat SS	2
6	GA5014651	Tee, Rubber, Suit ride height levelling valve rods	2
7	GA5004865	Hose Clamp, 3/8" SS (8-16/9W)	2
8	GA5003643	Washer 8mm Flat SS HD	4
9	GA5052590	Nut M8 Nyloc SS	2
10	GA5004918	Nut M8 SS	3

* NOTE: Part number GA5010868 comes with ride height valve and all connecting rods,rubber tees, split pins, washers, nuts and clamps. Some items cannot be supplied separately.

Chapter 22

CAB

Cab - Assembled

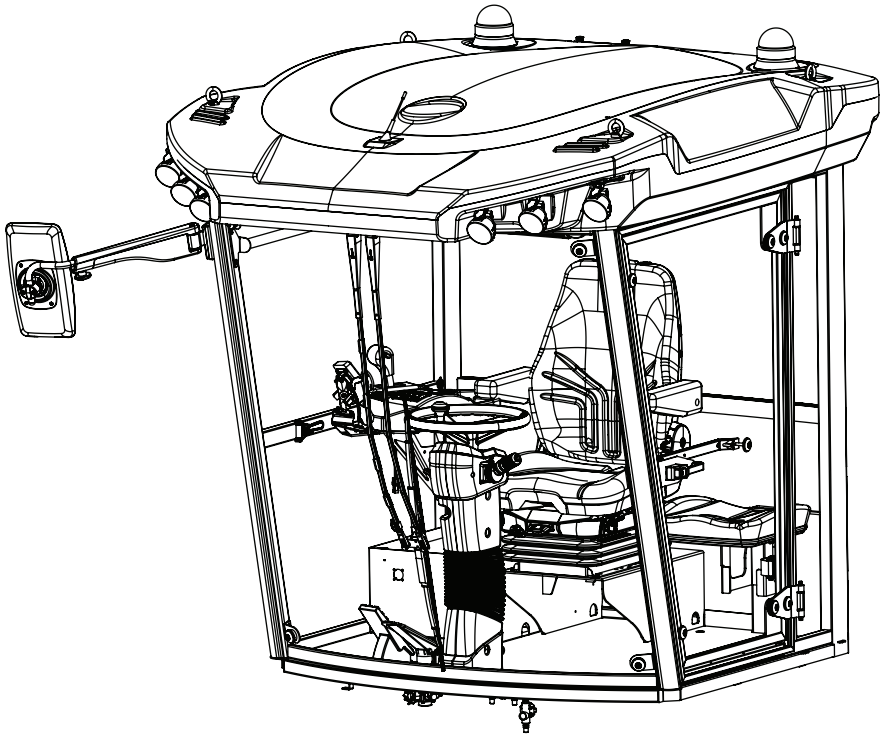

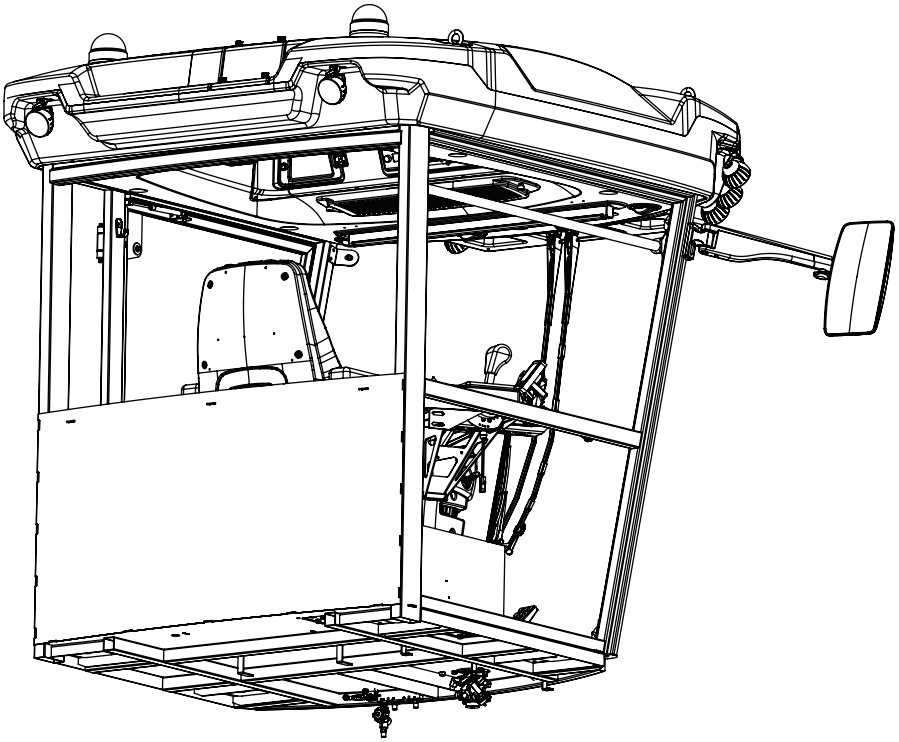

Fuse Box Mounting

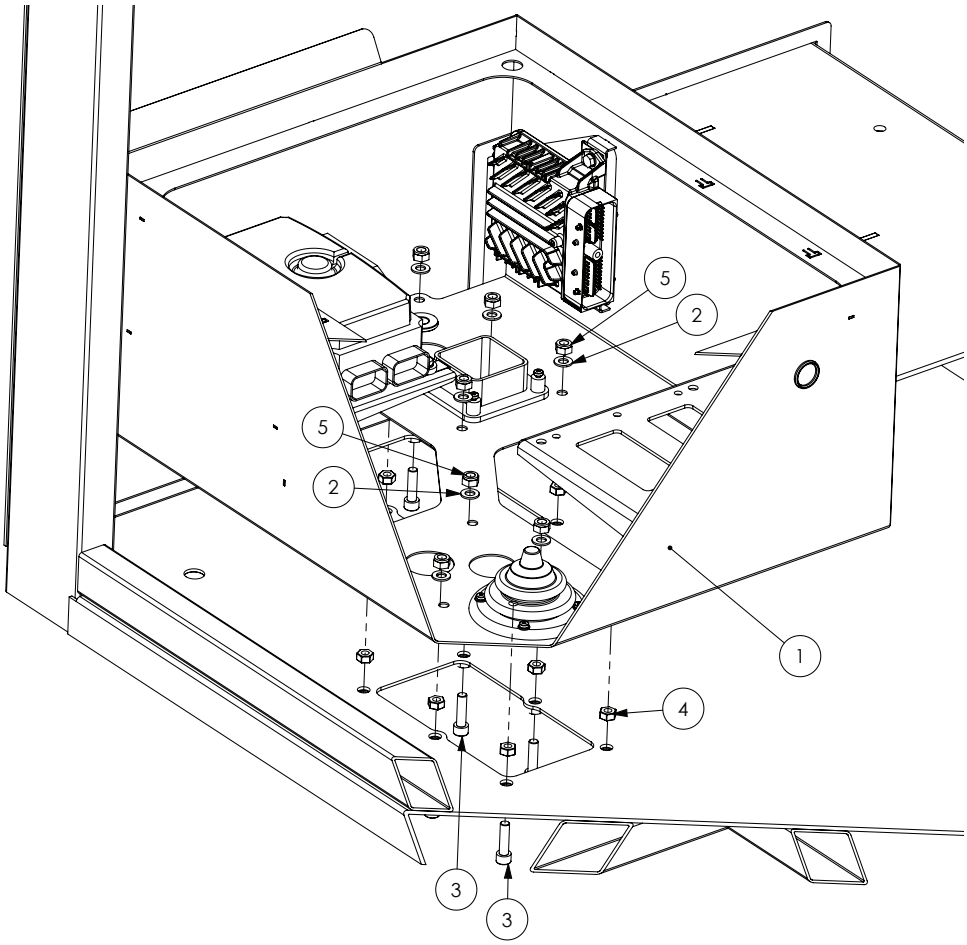

ITEM NO.	PART NUMBER	DESCRIPTION	QTY.
1	GA4660305	Cabin Electrical Box, G3 G4	1
2	GA5003643	Washer 8mm Flat SS HD	12
3	GA5070765	SHCS M8 x 30	12
4	GA5011499	Nut M8 Hex ZP	12
5	GA5052590	Nut M8 Nyloc SS	12

Fuse Box Lid

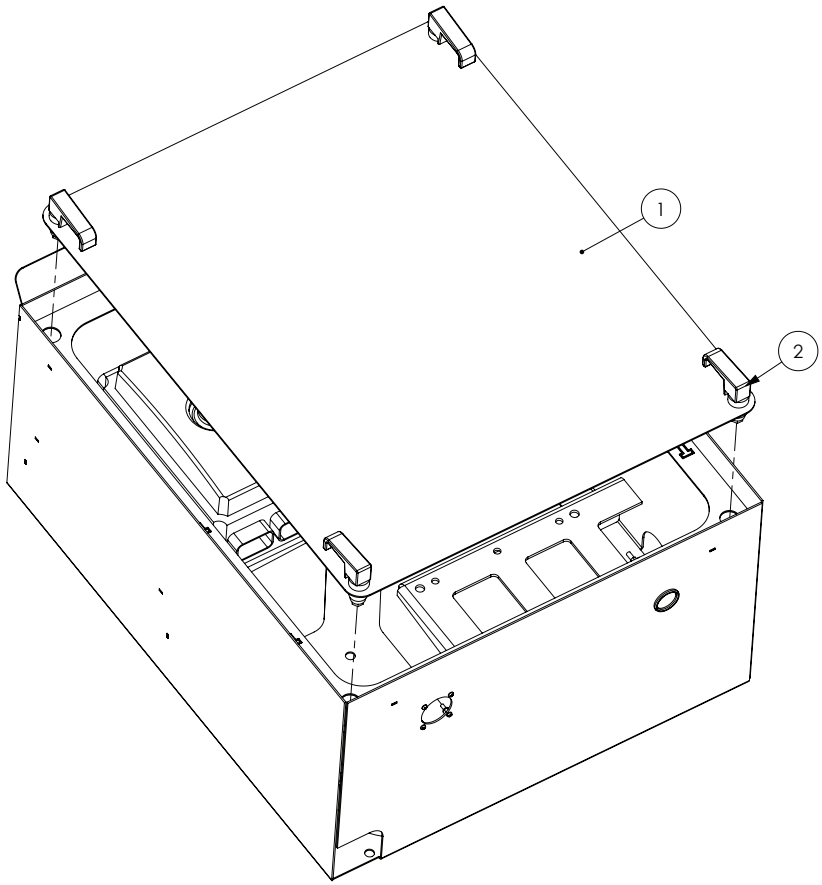

ITEM NO.	PART NUMBER	DESCRIPTION	QTY.
1	GA4507810	Cover Plate, Box Cabin Electrical, G3 G4 Series	1
2	GA5066600	Rawl action latch suit Advance pod door	4
-	GA5044995	Carpet, Charcoal, Marine Unbacked	-

Pneumatic Manifold Mounting

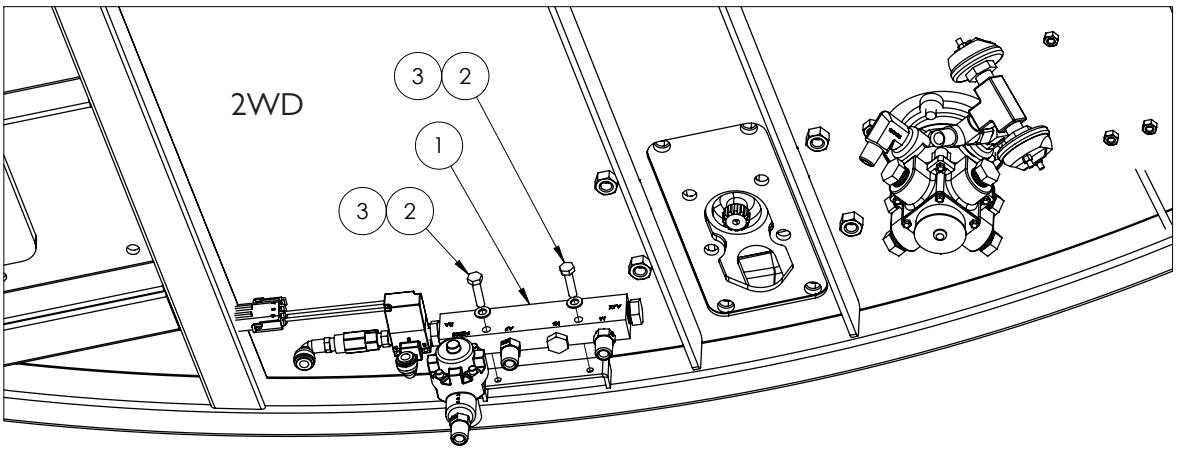

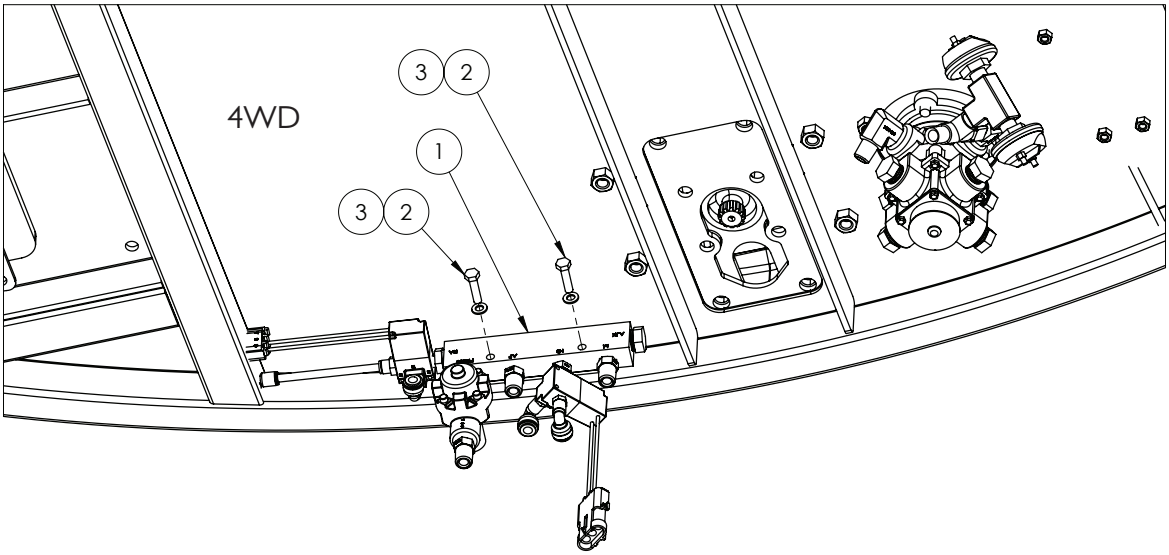

ITEM NO.	PART NUMBER	DESCRIPTION	QTY.
1	*	Pneumatic Manifold Assembly	1
2	GA5004073	Bolt M6 x 25	2
3	GA5004437	Washer 6mm Flat SS	2

Pneumatic Manifold Assembly 2WD

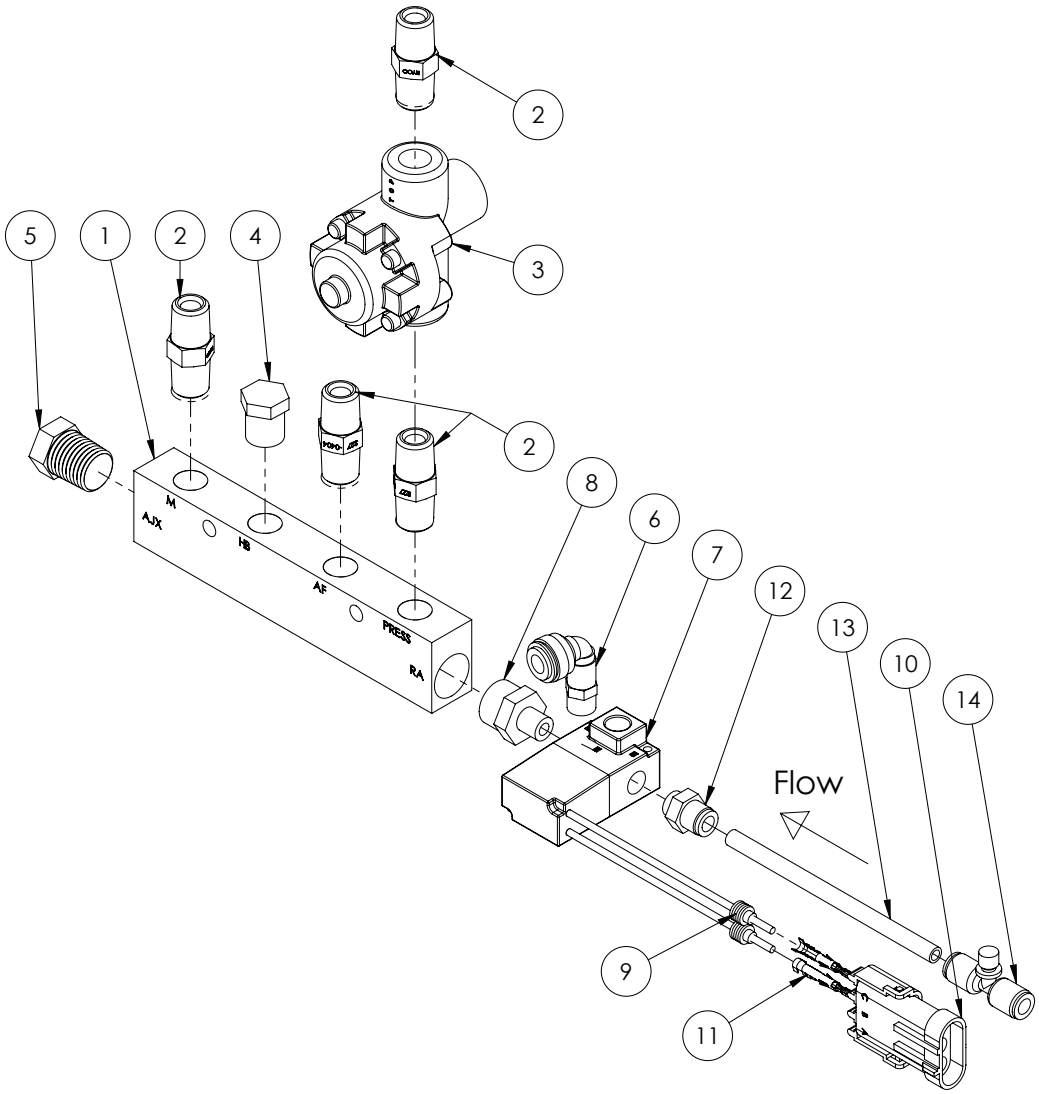

ITEM NO.	PART NUMBER	DESCRIPTION	QTY.
1	GA5069195	Manifold Pneumatic, 3/8”-1/4”, 2 in 4 out	1
2	GA3500218	Hydraulic adaptor, Nipple, 1/4” BSPT male x 1/4” BSPT male	4
3	GA5013433	Pressure protection valve	1
4	GA5069335	Plug, 1/4" BSPT male thread, Brass	1
5	GA5002575	3/8" NPT male taper plug brass	1
6	GA5045145	Elbow, swivel, push in 6mm, Brass 1/8” BSPT	1
7	GA5071235	Pneumatic Solenoid Valve MAC 35 Series 1/8” Ports with Flyleads	1
8	GA5020690	Reducing nipple, 1/8" male thread x 3/8" male thread, Brass	1
9	GA5014857	Seal, Green, Weather pack connector, Wire from 2.03 - 2.85 mm	2
10	GA5048550	Connector, Female, 3 Pin, Weather pack	1
11	GA5016617	Pin, Male, Sealed, Weather pack, Wire 1.0 - 2.0 mm	2
12	GA5050210	Pneumatic fitting, Nipple, 1/8" BSPP male x 6 mm push type	1
13	GA5004383	Tube, Nylon, 6mm, Black - Cut 100 mm	1
14	GA7000004	Pneumatic Flow Control Needle Valve, 1 Way, 6 mm Push-in, Inline	1

Pneumatic Manifold Assembly 4WD

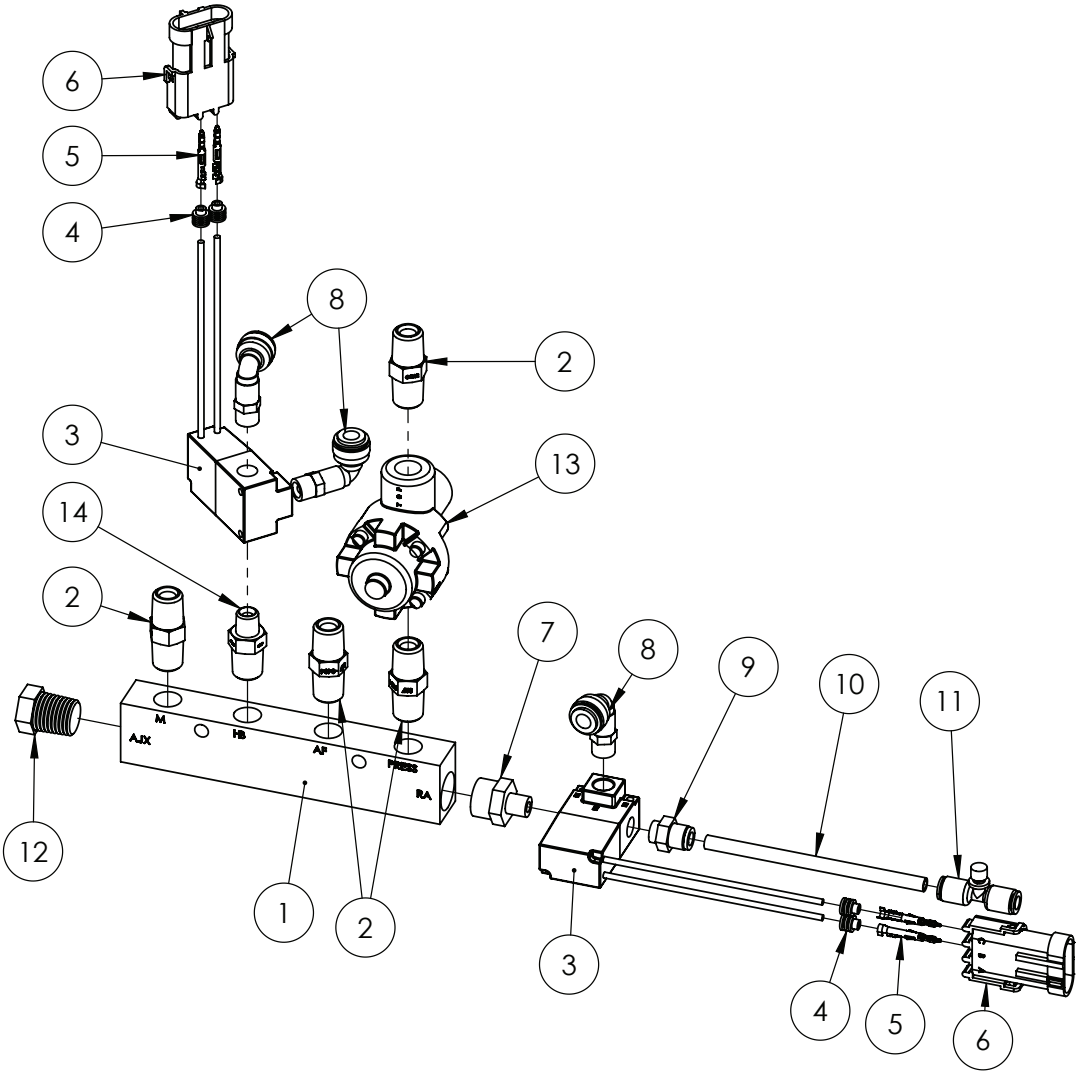

ITEM NO.	PART NUMBER	DESCRIPTION	QTY.
1	GA5069195	Manifold Pneumatic, 3/8”-1/4”, 2 in 4 out	1
2	GA3500218	Hydraulic adaptor, Nipple, 1/4” BSPT male x 1/4” BSPT male	4
3	GA5071235	Pneumatic Solenoid Valve MAC 35 Series 1/8” Ports with Flyleads	2
4	GA5014857	Seal, Green, Weather pack connector, Wire from 2.03 - 2.85mm	4
5	GA5016617	Pin, Male, Sealed, Weather pack, Wire 1.0 - 2.0mm	4
6	GA5048550	Connector, Female, 3 Pin, Weather pack	2
7	GA5020690	Reducing nipple, 1/8" male thread x 3/8" male thread, Brass	1
8	GA5045145	Elbow, swivel, push in 6mm, Brass 1/8” BSPT	3
9	GA5050210	Pneumatic fitting, Nipple, 1/8" BSPP male x 6mm push type	1
10	GA5004383	Tube, Nylon, 6mm, Black - Cut 100 mm	1
11	GA7000004	Pneumatic Flow Control Needle Valve, 1 Way, 6mm Push In, Inline	1
12	GA5002575	3/8" NPT male taper plug brass	1
13	GA5013433	Pressure protection valve	1
14	GA3500217	Hydraulic adaptor, Nipple, 1/4” BSPT male x 1/8” BSPT male	1

Brake Pedal Assembly

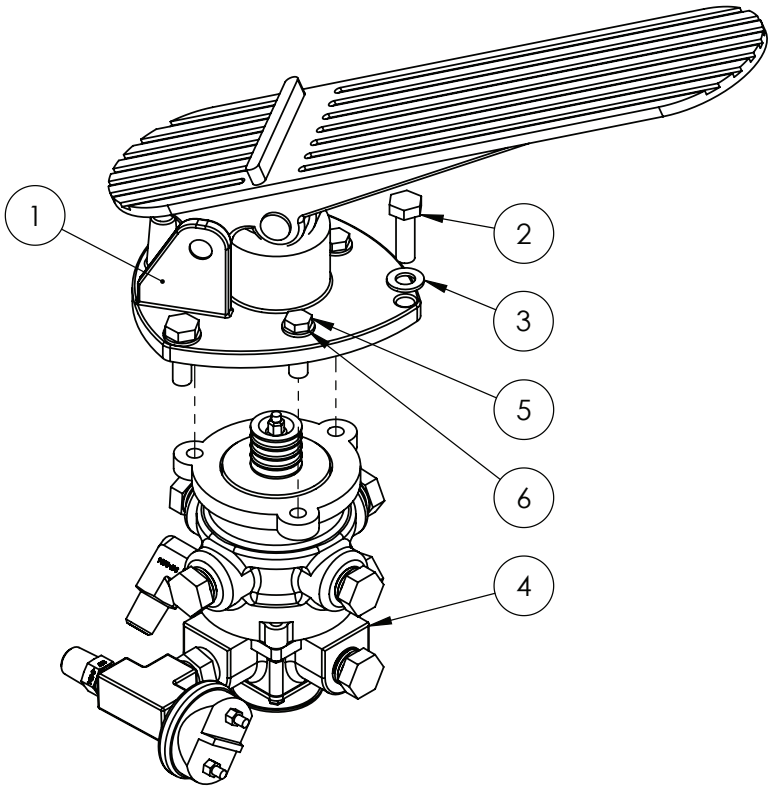

ITEM NO.	PART NUMBER	DESCRIPTION	QTY.
1	GA5016965**	Treadle assembly, Brake Pedal, air	1
2	GA5004711	Bolt M8 x 25 GR8.8 ZP	3
3	GA5003643	Washer 8mm Flat SS HD	3
4	*	Brake Valve Assembly	1
5	GA5004085	Bolt M8 x 20 GR8.8 ZP	3
6	GA5004919	Washer 8mm Spring SS	3

* Sub-assembly shown on following pages.
** NOTE: Items 5 & 6 are supplied with item 1.

Brake Valve Assembly

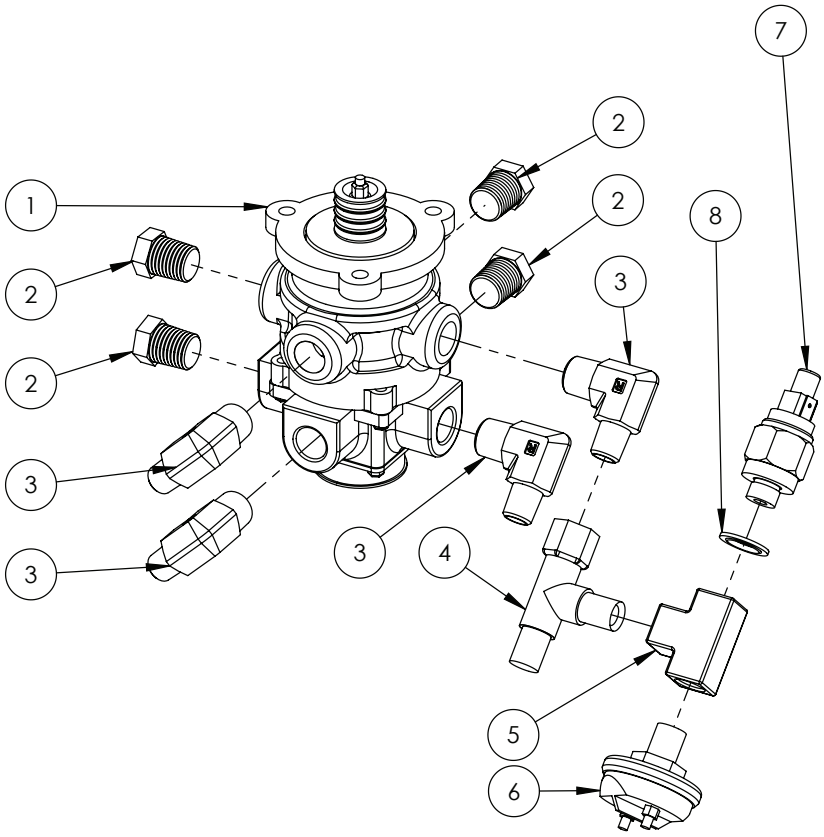

ITEM NO.	PART NUMBER	DESCRIPTION	QTY.
1	GA5005769	Basic foot valve, Dual circuit	1
2	GA5002575	3/8" Brass Plug	4
3	GA3500259	Hydraulic adaptor, Elbow, 90 degree, 3/8” BSPT male x 1/4” BSPT male	4
4	GA3500199	Hydraulic adaptor, Tee, 1/4” BSPT male x 1/4” BSPT male x 1/4” BSPP female	1
5	GA5048300	Tee, 1/4” female thread x 1/4” female thread x 1/4” female thread, Brass	1
6	GA5016081	Brake switch 13250	1
7	GA5071770*	Pressure switch, Normally closed, Adjustable, 1/4”, 4 psi, suit cruise cancel on G3 G4 series	1
8	GA3500130	Hydraulic adaptor, Seal, Metal Bonded, M14, MBD-14	1

* NOTE: Item 7 should be preset to 4PSI (Approx 4mm of thread showing).

Throttle Pedal

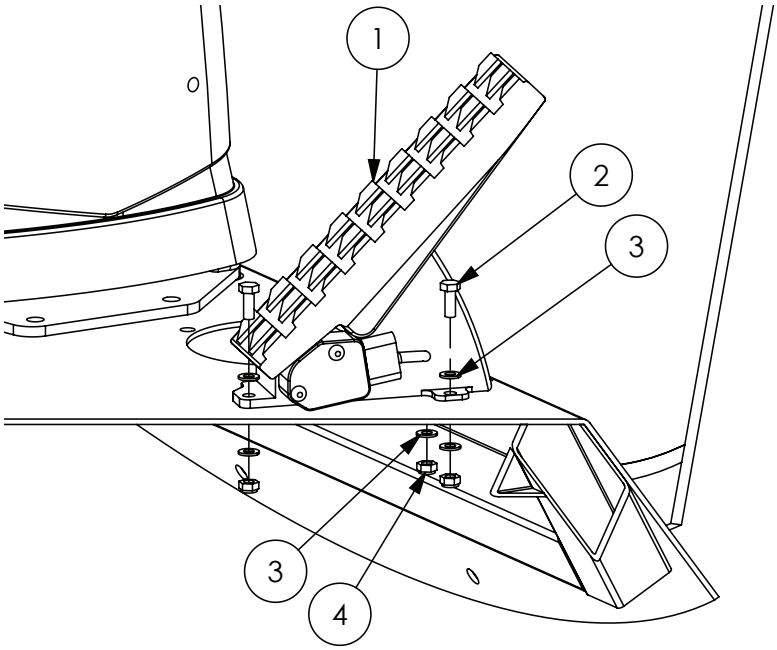

ITEM NO.	PART NUMBER	DESCRIPTION	QTY.
1	GA5065460	Throttle Pedal - Electronic	1
2	GA5004041	Bolt M6 x 16	3
3	GA5004437	Washer 6mm SS	6
4	GA5048115	Nut M6 nyloc	3

Park Brake

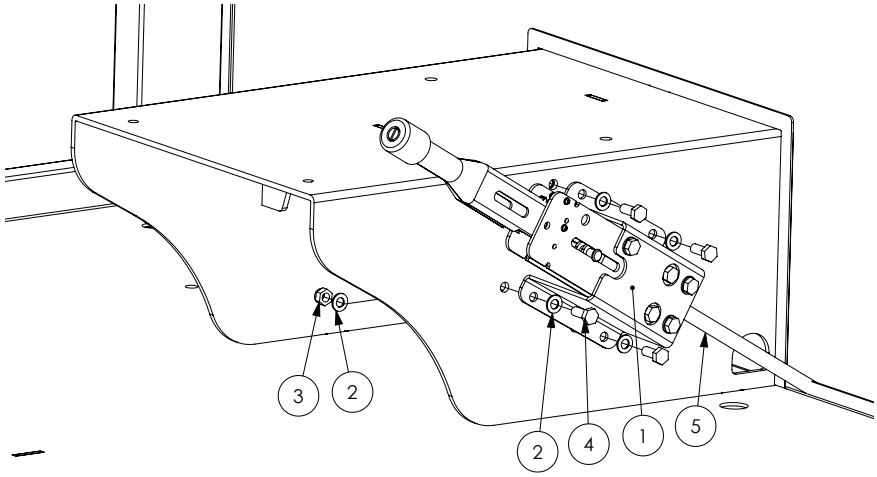

ITEM NO.	PART NUMBER	DESCRIPTION	QTY.
1	*	Cab - Park Brake Lever Assembly	1
2	GA5003643	Washer 8mm SS HD	8
3	GA5004917	Nut M8 Nyloc	4
4	GA5004085	Bolt M8 x 20	4
5	GA5070245	Park brake cable	1
-	GA4535345	Washer, 50 OD x 14.5 mm ID, SS	2

* Sub-Assembly shown on following page

Park Brake Lever Assembly

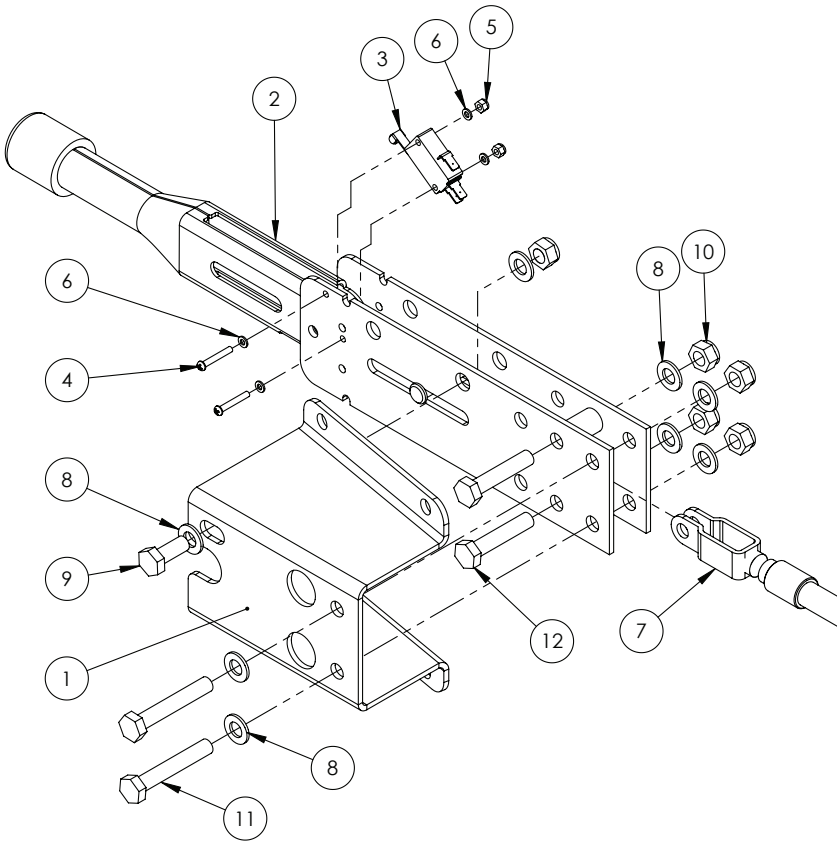

ITEM NO.	PART NUMBER	DESCRIPTION	QTY.
1	GA4524860	Mount Bracket Plate Handbrake Lever G3 G4	1
2	GA5010871	Park Brake Lever	1
3	GA3000028	Switch, Micro Single Pole Double Throw, 16A, 28mm Lever Roller	1
4	GA0500006	Pan Head, M3 x 20, ZP	2
5	GA5049465	Nut M3 Nyloc SS	2
6	GA5011351	Washer 3mm, Flat, SS	4
7	GA5070245	SP09 Handbrake cable assy	1
8	GA5003643	Washer 8mm Flat SS HD	8
9	GA5004085	Bolt M8 x 20	1
10	GA5052590	Nut M8 Nyloc SS	5
11	GA5004727	Bolt M8 x 50	2
12	GA5048655	Bolt M8 x 40	2

Steering Orbitrol - Plate Mount

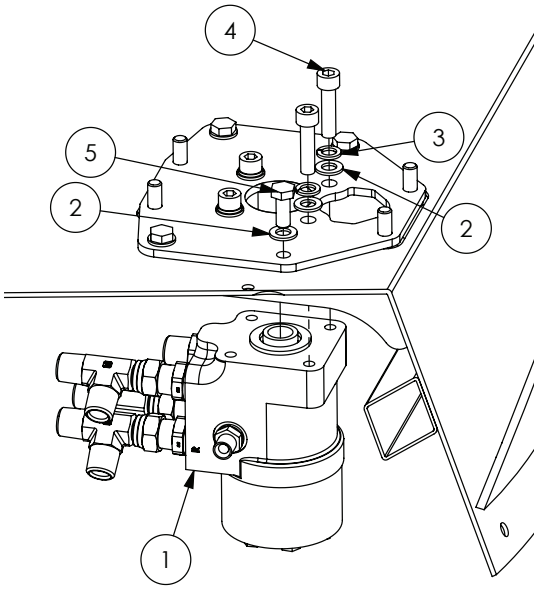

ITEM NO.	PART NUMBER	DESCRIPTION	QTY.
1	^	Steering Orbitrol Assembly	1
2	GA5000117	Washer 10mm Flat SS HD	8
3	GA5000137	Washer 10mm Spring SS	4
4	GA5006141	SHCS M10 x 40	4
5	GA5006161	Bolt M10 x 25 ZP GR8.8	4

^ See Chapter 18 'Hydraulics' for subassembly.

Steering Column - Plate Mount

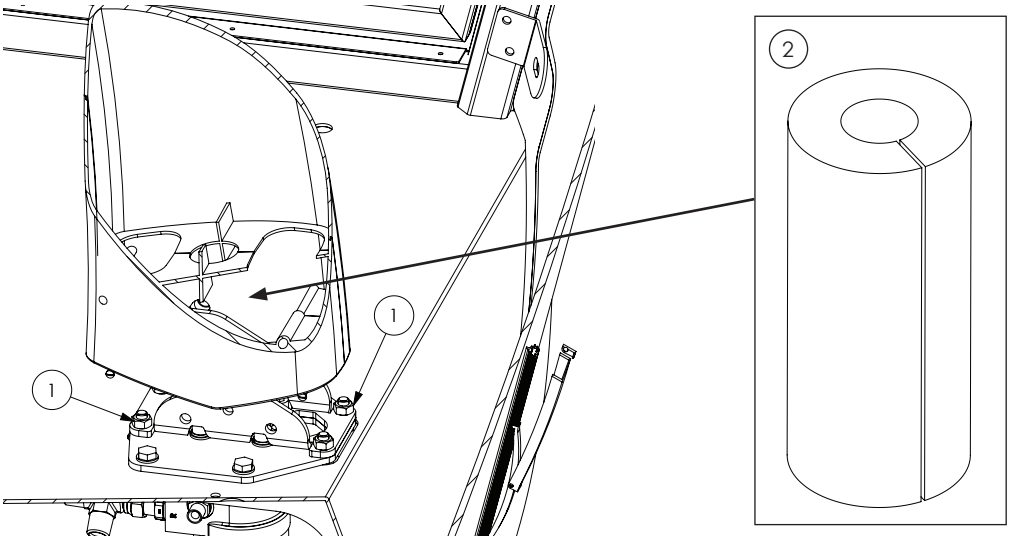

ITEM NO.	PART NUMBER	DESCRIPTION	QTY.
1	GA5012459	Nut M10 hex	4
2	GA5073255	Pipe Insulation, 13mm Wall, 19mm ID, Cut 100mm	1

Steering Column & Orbitrol - Direct Mount

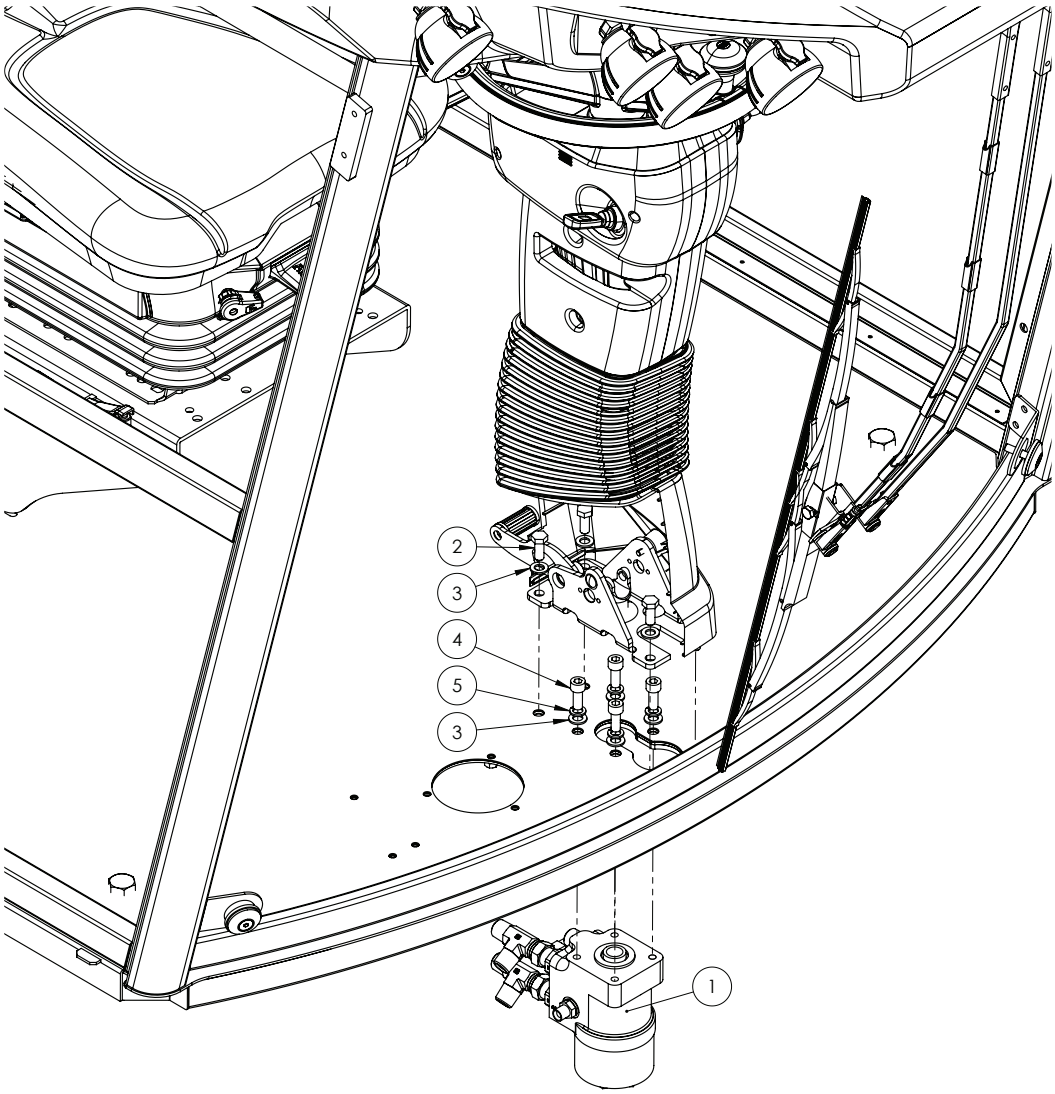

ITEM NO.	PART NUMBER	DESCRIPTION	QTY.
-	GA5024725	Gas strut, Upper	1
-	GA5024730	Gas strut, Lower	1
1	^	Steering Orbitrol Assembly	1
2	GA5006161	Bolt M10 x 25 GR8.8 ZP	4
3	GA5000117	Washer 10mm Flat SS HD	8
4	GA5071085	SHCS M10 x 25 GR12.9 ZP	4
5	GA5000137	Washer 10mm Spring SS	4

^ See Chapter 18 'Hydraulics' for subassembly.

Seat & Side Console

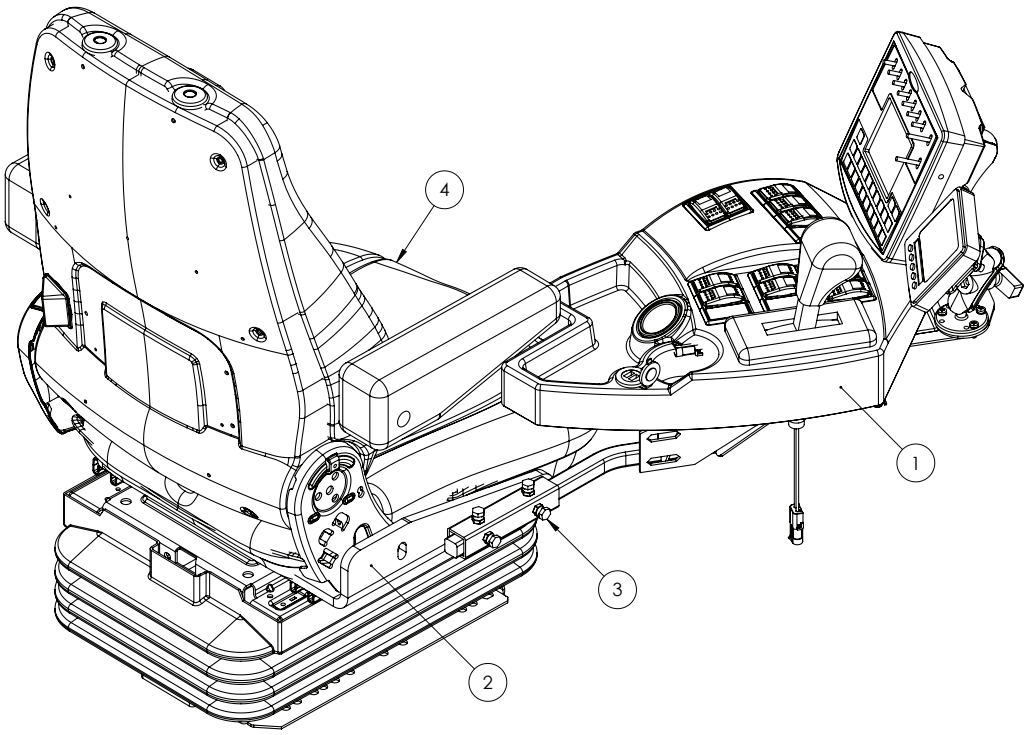

ITEM NO.	PART NUMBER	DESCRIPTION	QTY.
1	*	Console Assembly Raven	1
2	GA4661135	Seat Base Console Mount	1
3	GA5004693	Set Screw M8 x 16 GR8.8 ZP	4
4	GA5024770	Seat, EuroCab	1

* Sub-assembly shown on following pages

Seat Mounting

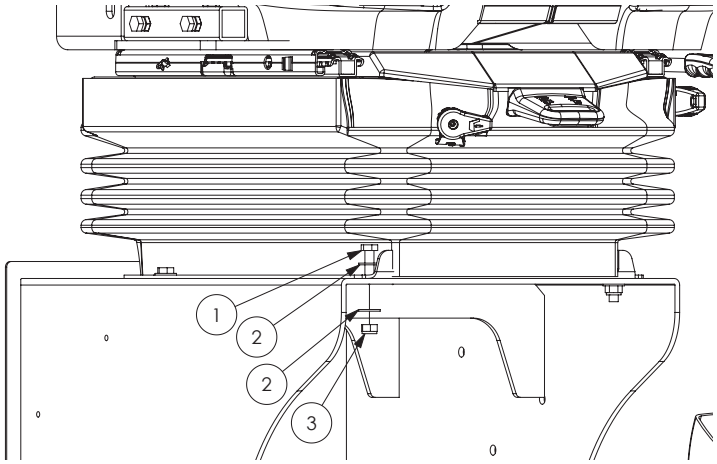

ITEM NO.	PART NUMBER	DESCRIPTION	QTY.
1	GA5004711	Bolt M8 x 25	4
2	GA5003643	Washer 8mm Flat SS HD	8
3	GA5052590	Nut M8 Nyloc SS 316	4

Side Console - Raven SCS 4400

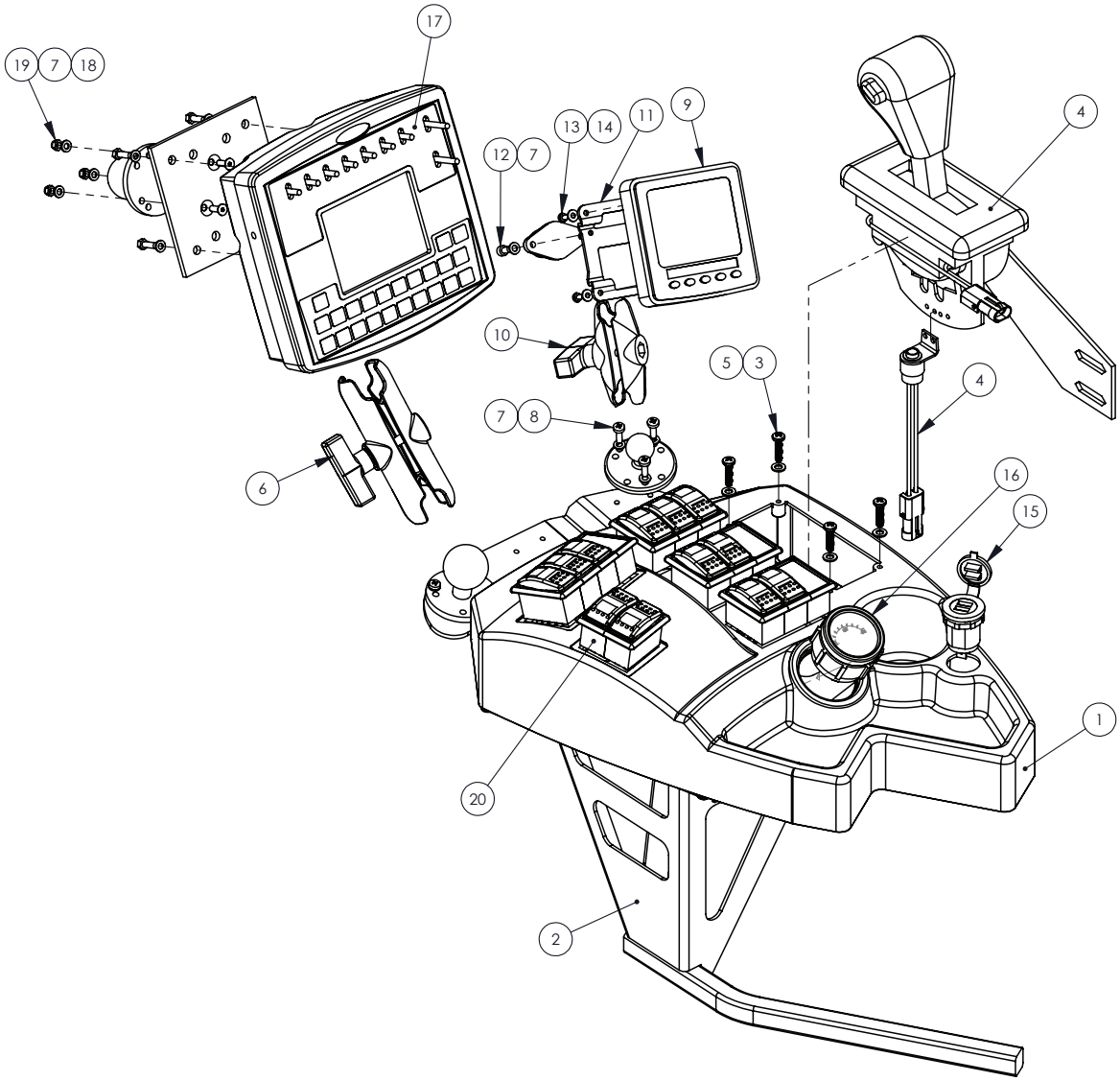

ITEM NO.	PART NUMBER	DESCRIPTION	QTY.
1	GA5072090	Console, Injection Moulded	1
2	GA4660645	Console Mount	1
3	GA5000527	Screw Pan Head 12g x 25mm SS	8
4	GA4905430	Gear Selector Assembly	1
5	GA5004437	Washer 6mm Flat SS	4
6	GA5020825	Ram Mount 101, Large	1
7	GA5003983	Washer 5mm Flat SS	11
8	GA5003977	Bolt Pan Head M5 x 16 SS A2-70	6
9	GA5066210	CANTRAK 2600 version 3 engine monitor	1
10	GA5068930	Ram Mount, Small	1
11	GA4509470	Plate, Cantrak Mount	1
12	GA5069975	SHCS M5 x 10 SS A2-70	2
13	GA5011360	M4 x 10mm Pan Head	4

Continued over page

Side Console - Raven SCS 4400

ITEM NO.	PART NUMBER	DESCRIPTION	QTY.
14	GA5020510	Washer 4mm Flat SS	4
15	GA3000084	Auxiliary Power Socket, Dual USB, Narva	1
16	GA5069037	Fuel gauge COBO suit SP 2011	1
17	GA5075948	Console, SCS 4400, no flash card reader, Raven	1
18	GA5051230	CSCS M5 x 16 SS A2-70	3
19	GA5003975	Nut M5 Nyloc SS	3
20	*	Switch Panel Assembly - Raven	1

* Sub-assembly shown on following pages

Switch Panel Assembly - Raven

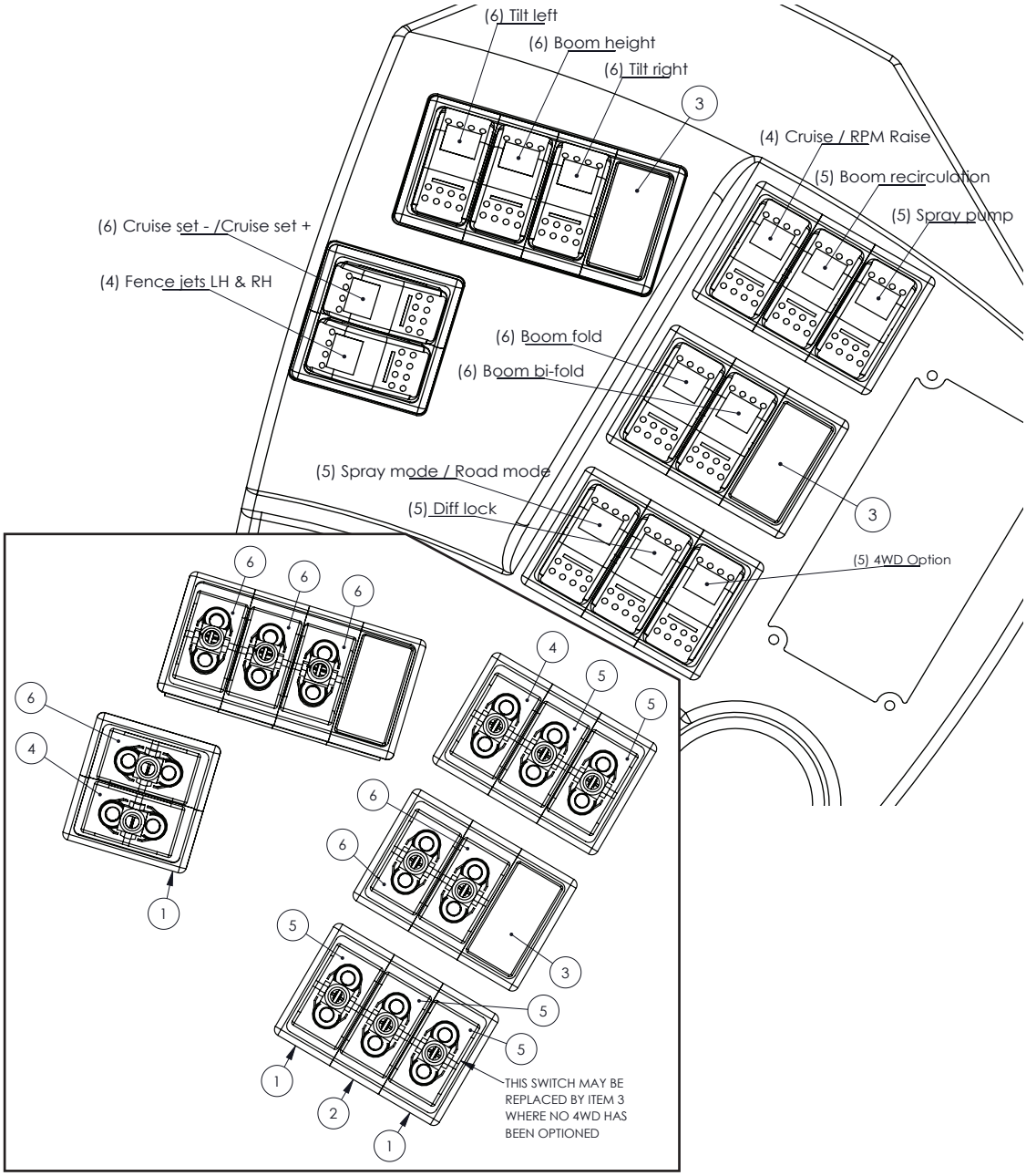

ITEM NO.	PART NUMBER	DESCRIPTION	QTY.
-	GA3000401	Switch Actuator, Black, White Square lens, Suit Carling switch body	12
1	GA5006397	Switch Housing End	10
2	GA5006387	Switch Housing Centre	5
3	GA5006421	Switch Blank Hole Panel - no 4WD	3
	GA5006421	Switch Blank Hole Panel - 4WD	2
4	GA3000363	Switch Body, on/off/on, 2P2T, Blue LED, no actuator, Carling	2
5	GA3000344	Switch Body, On/On, 2P2T, Blue LED, no actuator, Carling - no 4WD	4
	GA3000344	Switch Body, On/On, 2P2T, Blue LED, no actuator, Carling - 4WD	5
6	GA3000364	Switch Body, Mom/off/Mom, 2P2T, Blue LED, no actuator, Carling	6

Cabin Isolators

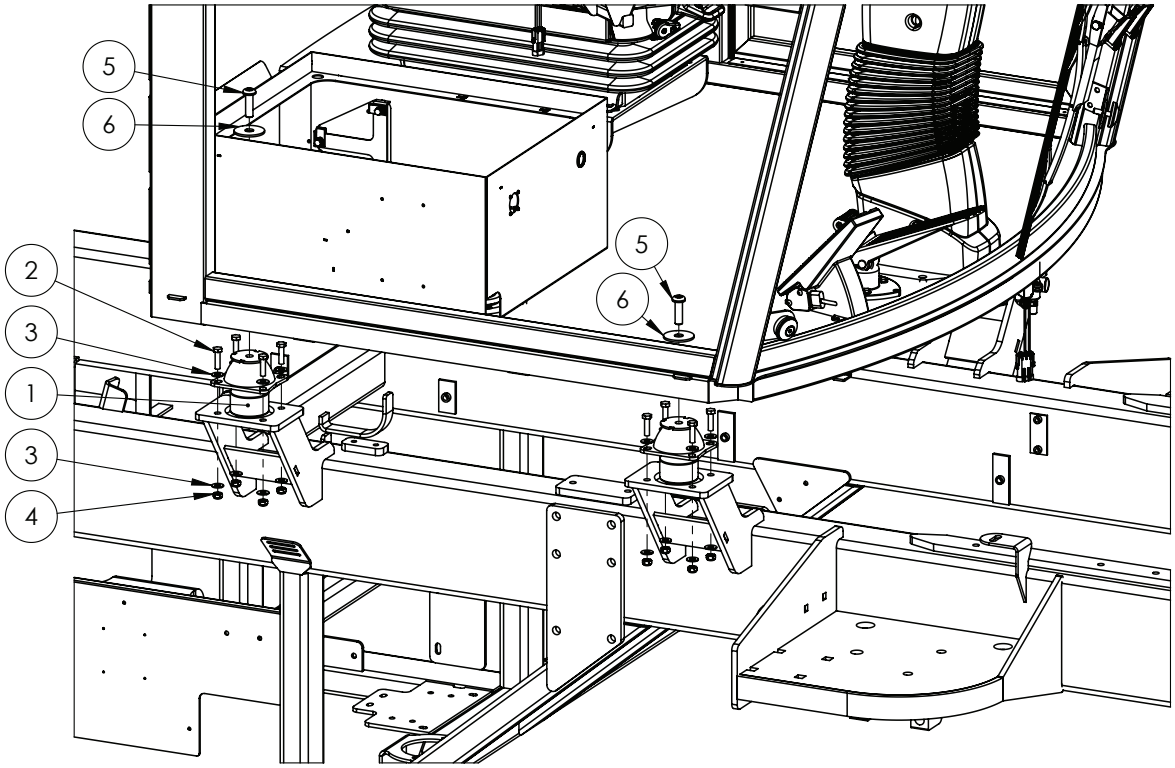

ITEM NO.	PART NUMBER	DESCRIPTION	QTY.
1	GA5078455	Cabin Mount, Hydraulic, G3 G4, Eurocab	4
2	GA5011475	Bolt M8 x 30 GR8.8 ZP	16
3	GA5003643	Washer 8mm Flat SS HD	32
4	GA5004917	Nut M8 Nyloc ZP	16
5	GA0500079	BHCS M12 x 30 SS A2-70	4
6	GA4535345	Washer, 50 OD x 14.5 mm ID, SS	4

EuroCab Spare Parts - Miscellaneous

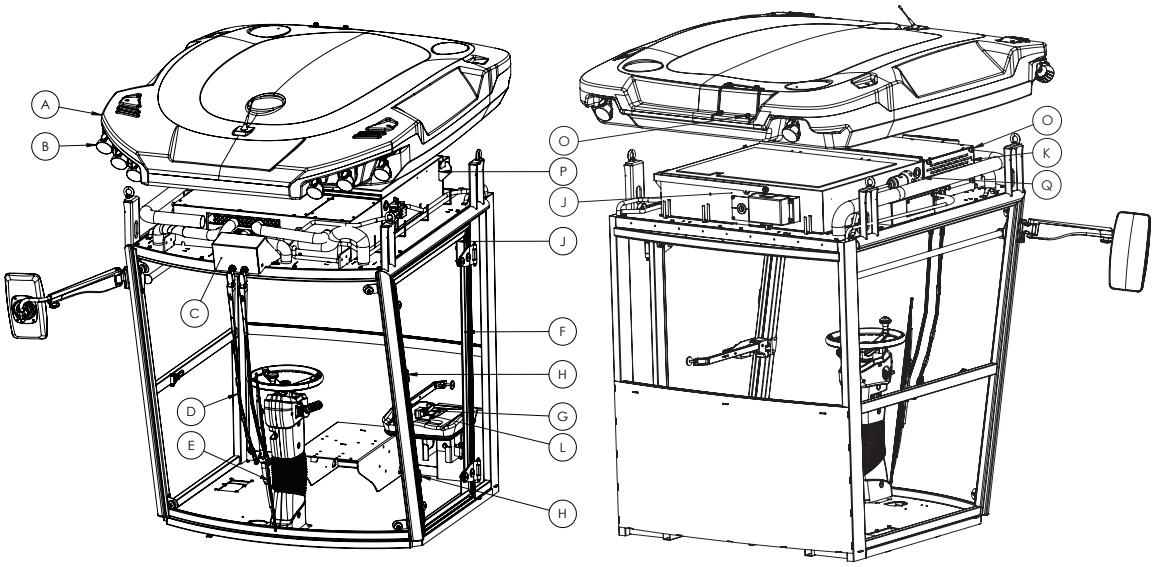

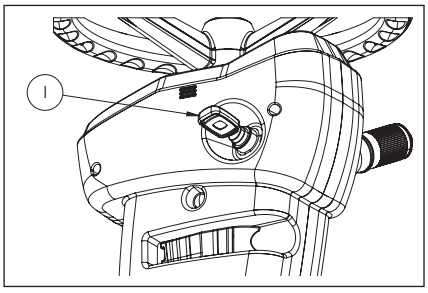

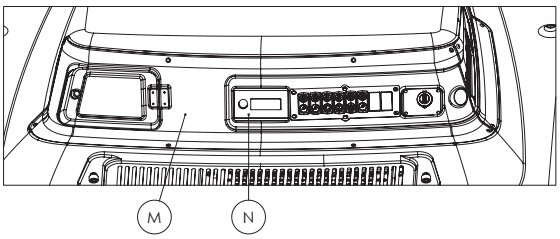

ITEM	PART NUMBER	DESCRIPTION
-	GA5025865	Filter, Pre, Foam, Suit, Euro Cabin, 10201.200F
-	GA5075311	Cabin air filter, Interior
-	GA5075312	Cabin air filter, Interior, Plastic grill cover
-	GA5024750	Mirror assembly, RHS, Eurocab
-	GA5024775	Flap, Overhead compartment, Interior, Eurocab
-	GA5024765	Fuse compartment access cover, Roof, Eurocab
-	GA5075321	AC evaporator, including fan unit, suit Euro cab
-	GA5075313	Drier receiver, A/C, Eurocab
-	GA5024850	Heater tap assembly, Electric, Eurocab
-	GA5024815	Blanking insert, Switch, Overhead control panel, Eurocab
-	GA5024795	Worklights switch, Cover piece, Eurocab
-	GA5024800	Wiper switch, Cover piece, Eurocab
-	GA5024805	Windscreen washer switch, Cover piece, Eurocab
-	GA5024810	Beacon light switch, Cover piece, Eurocab
-	GA5024785	Worklights switch, ON/OFF, Eurocab
-	GA5024790	Windscreen washer switch, ON/OFF, Eurocab
-	GA5024840	Air conveyor, Heater A/C unit, Eurocab

Continued over page

EuroCab Spare Parts - Miscellaneous

ITEM	PART NUMBER	DESCRIPTION
A	GA5055800	Cabin Roof, Moulded Plastic, Eurocab
B	GA5075317	Work Light, round, LED 11w, bare wires, Black suit Euro cab
C	GA5075330	Wiper motor 12v suit euro cab
	GA5075335	Wiper motor assembly suit euro cab
D	GA5075340	Wiper arm suit euro cab
E	GA5075345	Wiper blade suit euro cab 1200 mm long
F	GA5075360	Door frame painted suit euro cab
	GA5075365	Door sealing profile 6 m suit euro cab
	GA5075361	Door assembly, with glass, Eurocab
-	GA5025090	Door assembly, with glass, Eurocab, (From machine serial 201908 Onwards)
G	GA5075350	Door handle Outer suit euro cabin
	GA5025050	Door handle internal - Round bar type (From serial 201908 Onwards)
	GA5025045	Door internal lock bracket (From serial 201908 Onwards)
	GA5025040	Door clash pin adjustment plate (From serial 201908 Onwards)
	GA5025035	Door clash pin cover (From serial 201908 Onwards)
	GA5025030	Door clash pin (From serial 201908 Onwards)
H	GA5069745	Rubber Buffer, Door Stop, Cabin Door
I	GA5071617	Master Key, suit Euro cabin, cobo steering column 2016 on
J	GA5075325	Gas strut, black, open length 365 mm, 150 N, suit Euro cab
K	GA5075310	Carbon filter replacement suit Euro Cab 102.01
	GA5024835	Cover plate, Carbon air filter, Eurocab
L	GA5071616	Master Key, suit Euro Cab Door
M	GA5055795	Roof Panel, Internal Front, Eurocab
N	GA5075320	AC fan module controller, Horizon basic, suit Euro cab
O	GA5024745	Knob screw, M6 x 25, Eurocab
P	GA5048640	Relay, 12V, 180 Amp Peak, 100 Amp continuous, 4 pin, Normally open

EuroCab Spare Parts - Window Glass

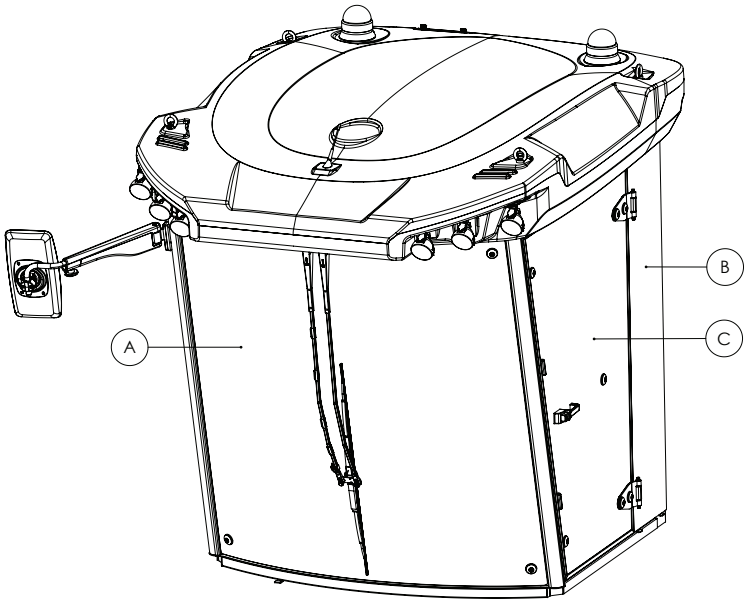

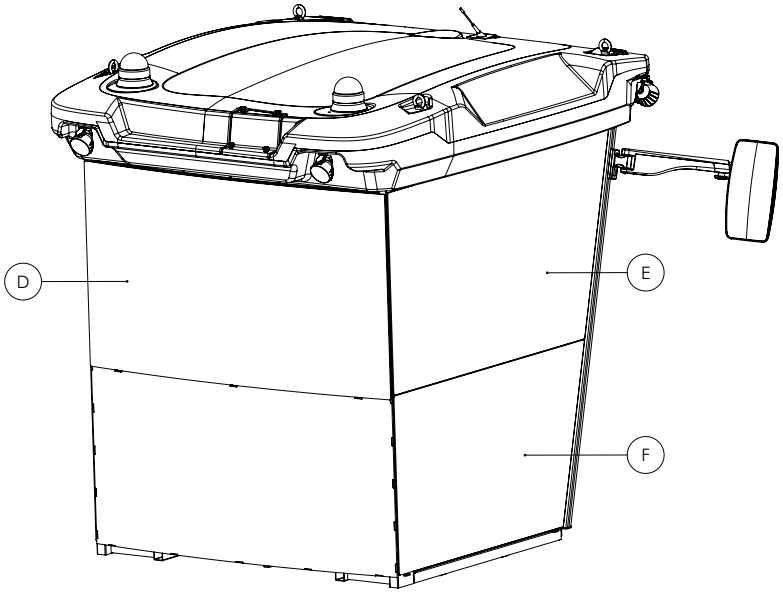

ITEM	PART NUMBER	DESCRIPTION
A	GA5075306	Glass panel, Front Windscreen, Euro Cab with flat floor, 2016 on
B	GA5075375	Glass panel, rear left, suit Euro cab
C	GA5075370	Glass panel, door, suit Euro cab
D	GA5075381	Glass panel, rear, curved, with tint, suit Euro cab, 2016 on
E	GA5075385	Glass panel, right upper, suit Euro cab
F	GA5075390	Glass panel, right lower, suit Euro cab

Chapter 23

BRAKES

Brake Boosters

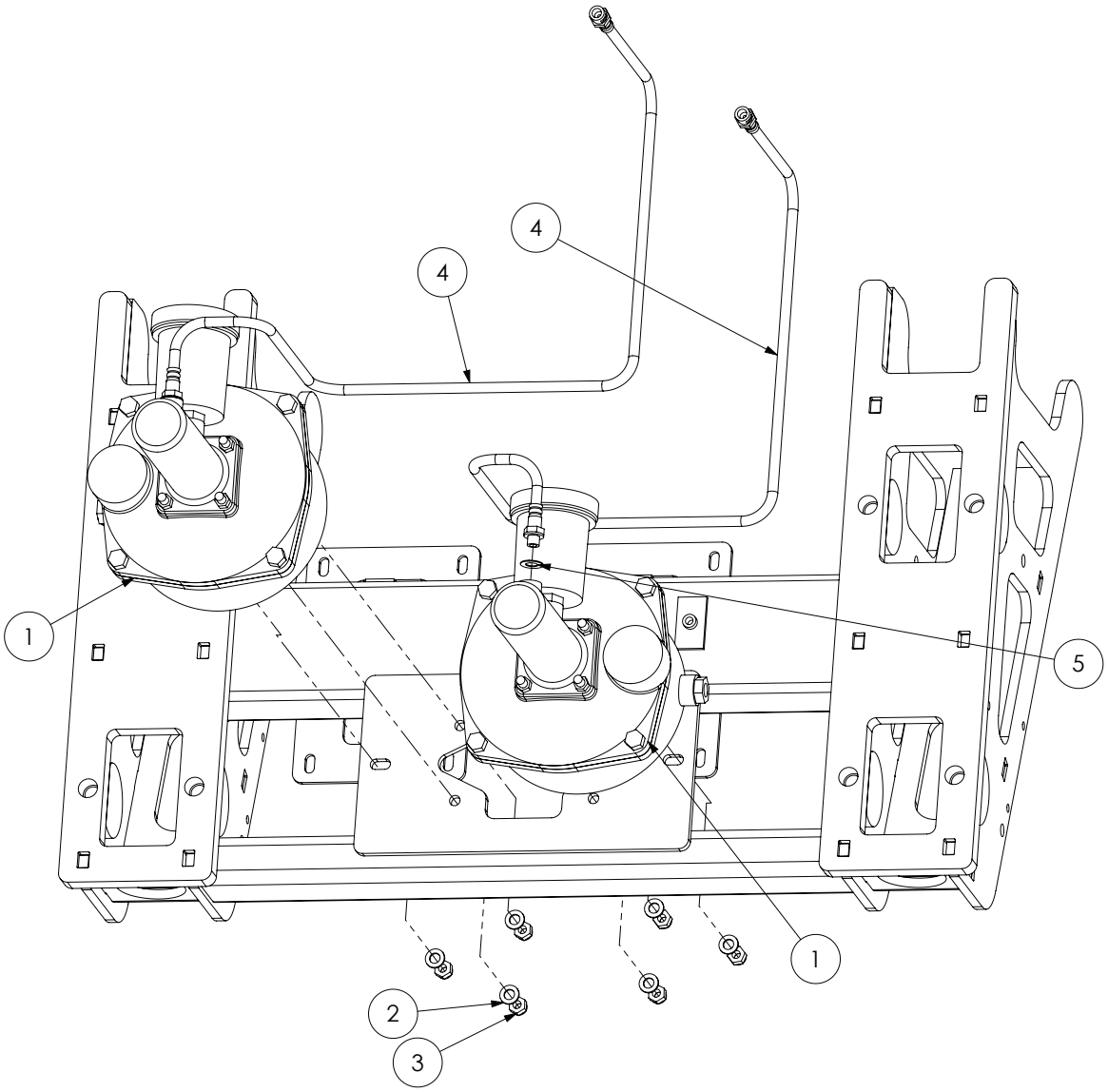

ITEM NO.	PART NUMBER	DESCRIPTION	QTY.
-	GA5071750	Seal Kit, Brake Booster Pump, Catai	-
-	GA5071755	Seal Kit, Brake Booster Convertor, Catai	-
1	GA5070890	Brake Booster Catai	2
2	GA5000117	Washer 10mm Flat SS HD	6
3	GA5000141	Nut M10 Nyloc	6
4	GA5055630	Brake Hose, Booster to Chassis, 1035mm	2
5	GA5007475	Washer 12 x 22mm Copper	2

Brake Booster Orientation

LEFT HAND SIDE BRAKE BOOSTER
FRONT BRAKES

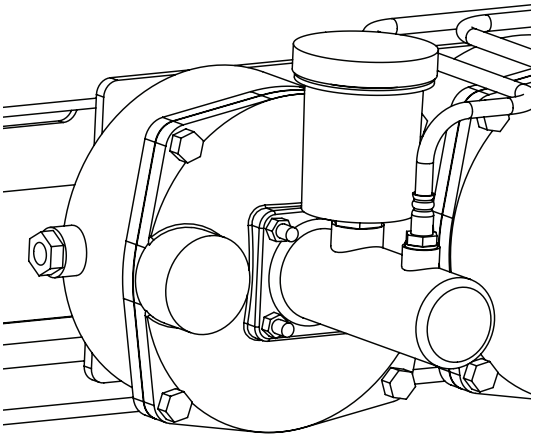

RIGHT HAND SIDE BRAKE BOOSTER
REAR BRAKES

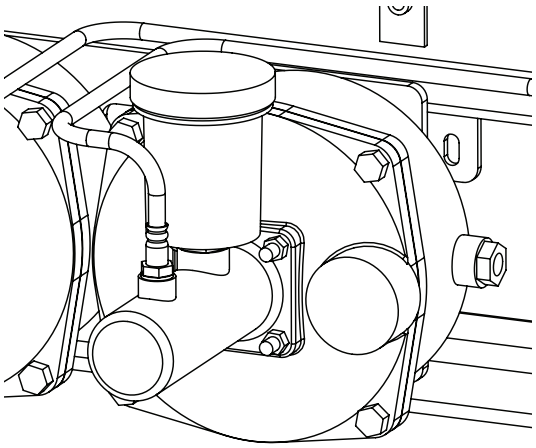

Un-bolt either the 4 M8 nuts or the 4 M8 bolts to re-orientate the master cylinder to suit the left or right configuration as needed.

Brakes - Front 2WD - Caliper & Disc

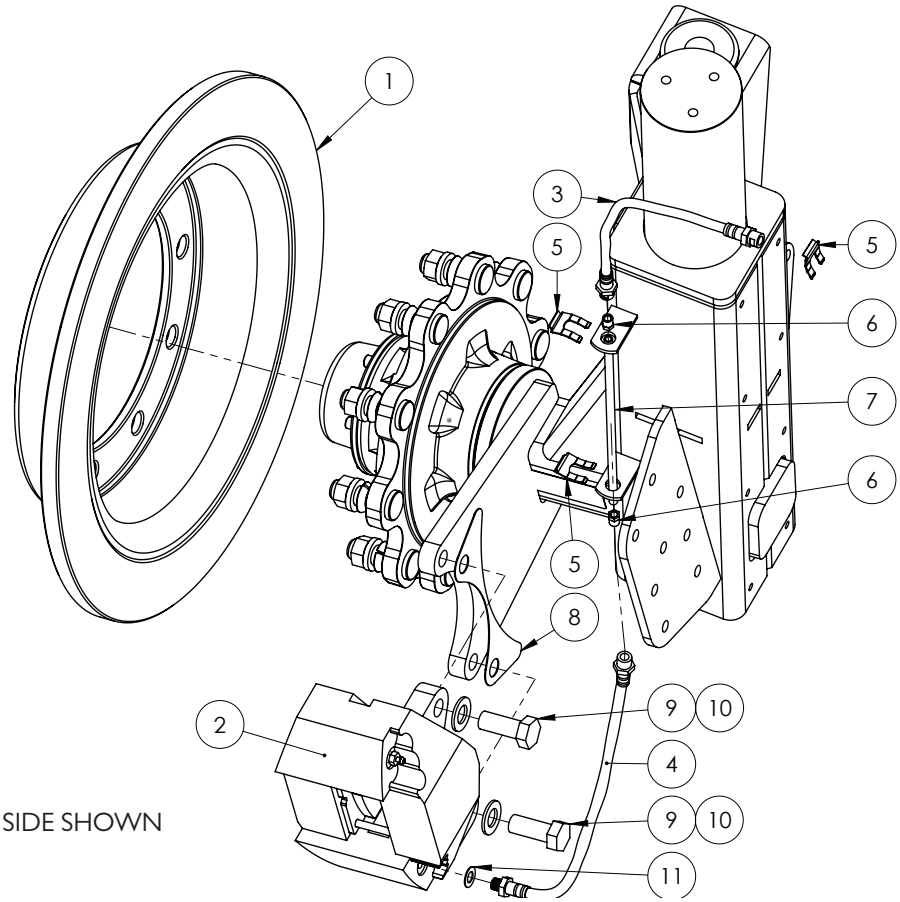

LEFT SIDE SHOWN

BRAKE SERVICE PARTS

PART NUMBER	DESCRIPTION
GA5006305	Brake pads (1 set for 1 caliper)
GA5051430	Pin kit suit Stilfreni caliper (1 set for 1 caliper)
GA5051435	Piston kit suit Stilfreni caliper (1 set for 1 caliper)
GA5051440	Seal kit, Suit Stilfreni brake caliper (1 set for 1 caliper)
GA5055645	Brake pad backing, anti squeal, self adhesive, pack of 4 (for 2 calipers)

Quantities shown are per side.

ITEM NO.	PART NUMBER	DESCRIPTION	QTY.
1	GA5070065	Brake Disc Rotor, Cast	1
2	GA5016069	Stilfreni brake caliper	1
3	GA5048210	Brake Hose, Front axle to dropleg, 470mm long	1
4	GA5011093	Lower brake Hose, Steel line to caliper, 470mm long	1
5	GA5010359	Clip for brake hose	3
6	GA5017019	Tube nut 1/4”, 7/16 x 24NS male thread, 14mm long	2
7	GA5006565*	Bundy Tube Brake Lines 1/4"	-
8	JCB-Caliper-shim	JCBcaliper shim 1mm FMS 5/9/03	1
9	GA5001515	Set Screw M20 x 1.5P x 50 GR8.8 ZP	2
10	GA5001741	Washer 20mm Flat SS HD	2
11	GA5007475	Washer 12 x 22mm Copper	1

* NOTE: Please specify length required when ordering this part.

Brakes - Front 4WD - Caliper & Disc

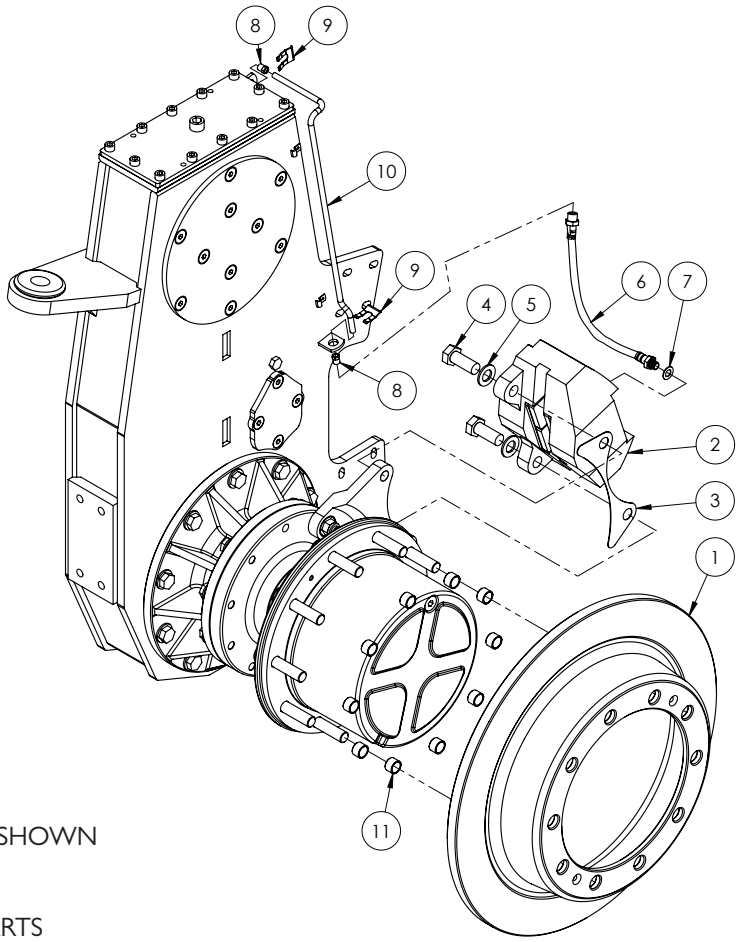

LEFT SIDE SHOWN

BRAKE SERVICE PARTS

PART NUMBER	DESCRIPTION
GA5006305	Brake pads (1 set for 1 caliper)
GA5051430	Pin kit suit Stilfreni caliper (1 set for 1 caliper)
GA5051435	Piston kit suit Stilfreni caliper (1 set for 1 caliper)
GA5051440	Seal kit, Suit Stilfreni brake caliper (1 set for 1 caliper)
GA5055645	Brake pad backing, anti squeal, self adhesive, pack of 4 (for 2 calipers)

Quantities shown are per side.

ITEM NO.	PART NUMBER	DESCRIPTION	QTY.
1	GA5070066	Brake Disc Rotor, Cast, 4WD Front	1
2	GA5016069	Stilfreni brake caliper	1
3	JCB-Caliper-shim	JCBcaliper shim 1mm FMS 5/9/03	1
4	GA5001515	Set Screw M20 x 1.5P x 50 GR8.8 ZP	2
5	GA5001741	Washer 20mm Flat SS HD	2
6	GA5011093	Lower brake Hose, Steel line to caliper, 470mm long	1
7	GA5007475	Washer 12 x 22mm Copper	1
8	GA5017019	Tube nut 1/4”, 7/16 x 24NS male thread, 14mm long	2
9	GA5010359	Clip for brake hose	2
10	GA5006565*	Bundy Tube Brake Lines 1/4"	1
11	GA4551075	Bush, Wheel Stud Brake Rotor Spacer	10

* NOTE: Please specify length required when ordering this part.

Brakes - Front - Axle Mounted Lines

FIXED AXLE 2-3M

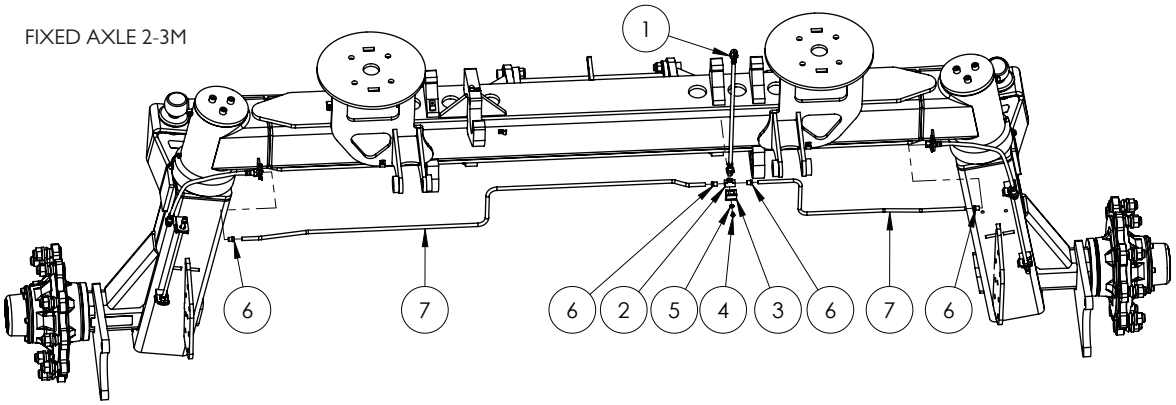

AJUSTABLE AXLE 2-3M

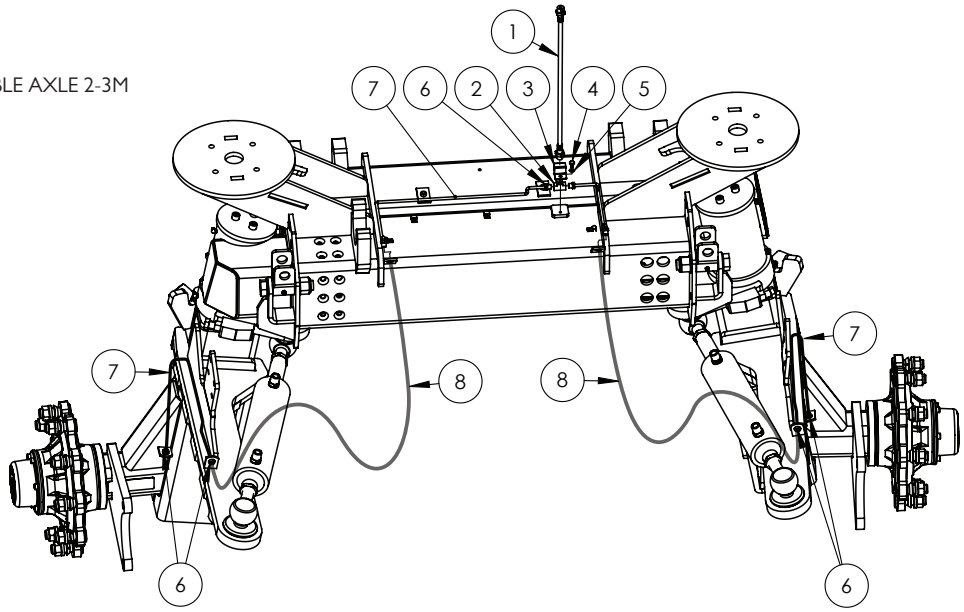

AJUSTABLE AXLE 3-4M

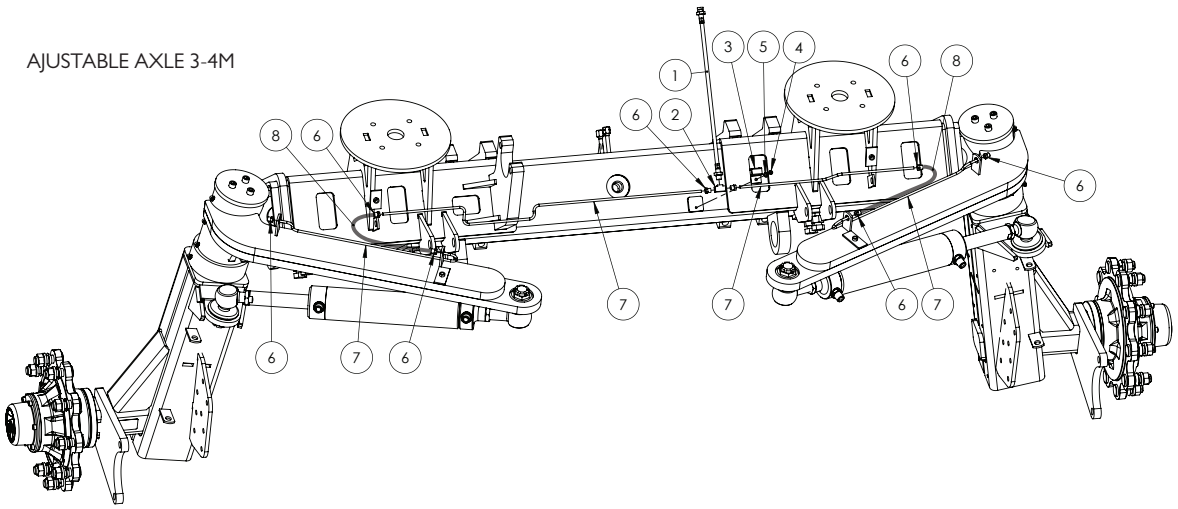

Continued over page

Brakes - Front - Axle Mounted Lines

ITEM NO.	PART NUMBER	DESCRIPTION	QTY.
1	GA5070500	Brake Hose, Chassis to Axle, 550mm long	1
2	GA5008793	Tee, Flare, 7/16” 24 TPI female thread, Suit 1/4” tube	1
3	HYD002LAS	Clamp bracket Hydraulic fitting	1
4	GA5004023	BHCS M6 x 10 SS A2-70	1
5	GA5004437	Washer 6mm Flat SS	1
6	GA5017019	Tube nut 1/4”, 7/16 x 24NS male thread, 14mm long - Fixed axle	4
		Tube nut 1/4”, 7/16 x 24NS male thread, 14mm long - Adj. 2-3m axle	8
		Tube nut 1/4”, 7/16 x 24NS male thread, 14mm long - Adj. 3-4m axle	8
7	GA5006565*	Bundy Tube Brake Lines 1/4"	-
8	GA3500664	Brake hose, Brake pod to chassis, 1800mm long	2

* NOTE: Please specify length required when ordering this part.

Brakes - Rear

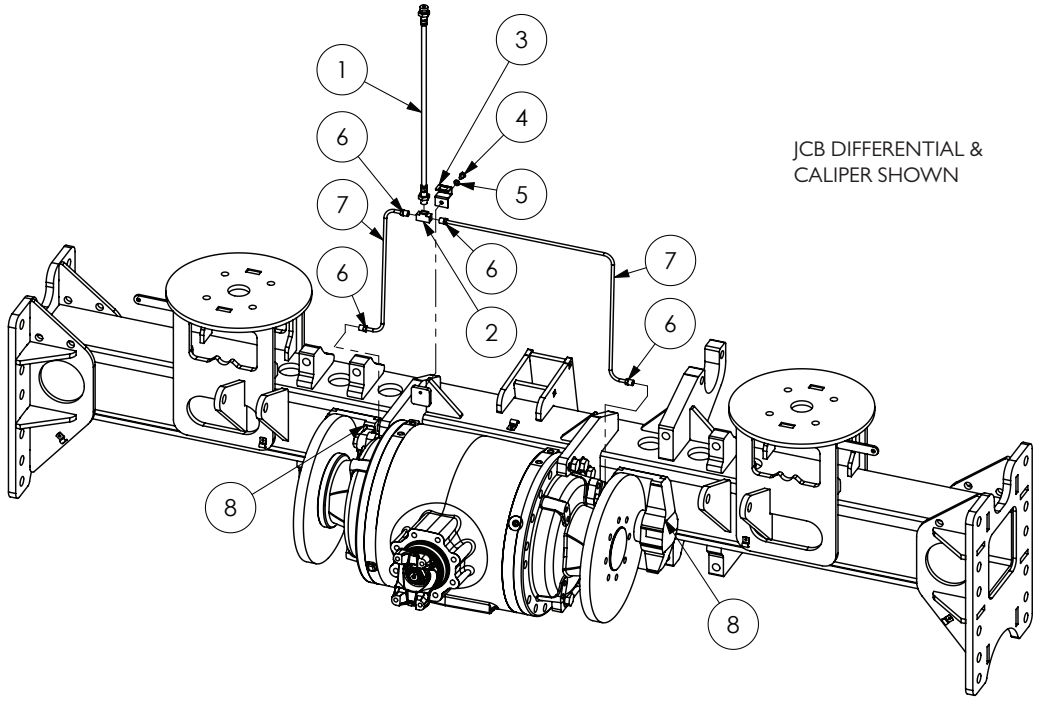

BRAKE SERVICE PARTS

PART NUMBER	DESCRIPTION
GA2700036	Seal Kit, JCB Brake Caliper, Repairs Two Calipers
GA5055880	Brake pad kit, 2 pads only, Rear, Adjustable axle, suits Dromos and JCB Brake caliper
GA2700035	Brake Pad Set, Rear, 4 Pads, clips and pins, JCB Brake Caliper (for pads only order GA5055880)
GA2700091	Brake Disc Rotor, Rear, JCB - Order two per differential.

ITEM NO.	PART NUMBER	DESCRIPTION	QTY.
1	GA5070500	Brake Hose, Chassis to Axle, 550mm long	1
2	GA5008793	Tee, Flare, 7/16” 24 TPI female thread, Suit 1/4” tube	1
3	HYD002LAS	Clamp bracket Hydraulic fitting	1
4	GA5004023	BHCS M6 x 10 SS A2-70	1
5	GA5004437	Washer 6mm Flat SS	1
6	GA5017019	Tube nut 1/4”, 7/16 x 24NS male thread, 14mm long	4
7	GA5006565~	Bundy Tube Brake Lines 1/4"	-
8	GA2700034*	JCB Caliper	2
	-	Caliper mount lug - Comes attached to caliper	4
	-	Bolt, M12 x 40 x 1.75P Course Thread	8

~ NOTE: Please specify length required when ordering this part.

* See chapter 21 ‘Driveline & Differential’ for Dromos brake caliper.

GOLDACRES

www.goldacres.com.au