G6 Crop Cruiser Series 2

PARTS MANUAL MY20

SEE INSIDE COVER

GA8701178 REV 02
APRIL 2021
FROM SERIAL #203003

GOLDACRES

For further information about any of the products shown please visit - www.goldacres.com.au.

© Goldacres Trading 2020
This publication and all designs are copyright.

No part, products or designs may be reproduced by any process except in accordance with the Copyright act 1968.

All information in this operator's manual is based on the latest product information available at the time of printing. The policy of Goldacres is one of continuous improvement and as such, Goldacres reserve the right to alter any specifications and designs without notice and without incurring any obligation regarding such changes.

No part of this manual may be reproduced without written permission from Goldacres. All photographs and technical information remain the property of Goldacres.

Goldacres Trading Pty Ltd
3 Morang Crescent
Mitchell Park Vic 3355

Ph: 03 5342 6399
Fax: 03 5342 6308

DOWNLOAD AN ELECTRONIC VERSION OF THESE

MANUALS ON THE GOLDACRES WEBSITE:

goldacres.com.au

Under Parts & Service > Owner-Operator Manuals:

GA8701177 - Operator's Manual, Crop Cruiser G6 Series 2 MY20

Under Parts & Service > Parts Manuals:

GA8701178 - Parts Manual, Crop Cruiser G6 Series 2 MY20

Contents

1 CHASSIS 8

Chassis 8
Access Platform - Ladder. 9
Access Platform - Ladder. 10
Pneumatic Cylinder - Ladder Assembly. 11
Access Platform - Hand Rails 12
Access Platform - Hand Rails 13
Access Platform - Boom Rest Left Side 36-42m 14
Access Platform - Boom Rest Left Side 36-42m 15
Access Platform - Boom Rest Left Side 48m 16
Access Platform - Step 17
Boom Rest - Right Side 36-42m. 18
Boom Rest - Right Side 48m. 19
Access Platform - Right Side 20
Access Platform - Right Side 21
Left Hand Mirror 22
Bonnet. 23
Bolt-in Crossmember 24
Hydraulic Pump Guard. 24
Air Dryer 25
Drain Point Fittings 26
Hose Hanger 27
Tool Box Cover & Mounting. 28
Tool Box Frame Assembly 29
Tool Box Frame Assembly (First Design) 30
Tool Box Frame Assembly (Second Design) 31
Hand Wash Tank Mounting 32
Hand Wash Tank Assembly 33
Tool Box Display Screen Mounting (Second Design) . . 34
Tool Box Display Screen Assembly (Second Design) . . 35
Tool Box - Door - Strut & Pinchweld 36
Door Assembly 37
Tow Bar 38
Air Tank 39
Autogrease Mounting 40
Fuse Cover (From S/N 104015) 41
Pump and Suction Filter Mounting - Diaphragm Pump . 42
Pump and Suction Filter Mounting - Centrifugal Pump . 43

2 PUMPS 45

Spray Pump - Zeta 260 45
Spray Pump - Zeta 260 - Hydraulic Drive 46
Spray Pump - Zeta 260 - Hydraulic Drive 47
Spray Pump - ARAG MSP400 48
Spray Pump - ARAG MSP400 Assembly 50
Spray Pump - ARAG MSP400 Assembly 51
Fill Pump Plumbing Assembly - Up To S/N 203992 . . . 52
Fill Pump Plumbing Assembly 53
Fill Pump Plumbing Assembly 54
Fill Pump Plumbing Assembly - From S/N 203993 . . . 55
Fill Pump Plumbing Assembly - From S/N 203993 . . . 56
Fill Pump Assembly 57
Fill Pump Assembly 58
Chemical Pump Assembly 59
Wash Down Gun Pump 60

3 FLUSH TANK 62

Flush Tank Mounting 62
Flush Tank Assembly 63
Flush Tank & Frame. 64

4 RH POD 66

Not Fitted 66

5 LH POD 68

Plumbing Pod Mounting 68
LH Pod, Fill 69
LH Pod, Fill 70
Chemical Pump Mouniting. 71
Chemical Plumbing Pod Frame 72
Chemical Pump Air Feed Valve 74
Chemical Pump Output Selector Valve. 75
Micromatic Rinse Socket 76
Chemical Probe Hose Lance. 77
Enviro Coupling & Hose 78

6 DIRECT CHEMICAL INJECTION 79

Not Fitted 79

7 DUAL PRODUCT 81

Not Fitted 81

8 INDUCTION HOPPER 83

Hopper Mounting Assembly - Up to S/N 204011 83
Hopper Mounting Assembly. 84
Hopper Mounting Assembly - From S/N 204012 85
Hopper Mounting Assembly - From S/N 204012 86
Hopper Tank Bottom Assembly. 87
Hopper Tank Bottom Assembly. 88
Hopper Tank Lid Assembly 89
Hopper Tank Hinges 90
Bottom Valve Assembly 91
Bottom Valve Assembly Continued 92
Ball Valve Assembly. 92
Drum Rinse Nozzle Assembly. 93

9 FOAM MARKER TANK 95

Not Fitted 95

10 TRANSCAL 97

Not Fitted 97

11 MAIN TANK 99

Tank Assembly - 6000L. 99
Tank Assembly - 6000L. 100
Tank Assembly - 6000L. 101
Tank Assembly - 6000L. 102
Tank Assembly - 6000L. 103
Tank Rinsing Nozzle, Elbow - Assembly. 104
Tank Rinsing Nozzle, Tee - Assembly 104
Outlet - Tank Overflow 3". 105
Inlet - Tank, 1". 105
Inlet - Tank Fill 1" - Chemical Pump 106
Inlet - Hopper Tank 2" 106
3'' Front Fill, Option (50058) 107
Breather Valve Assembly. 108
Tank Drain. 108
Supermix Agitator 109

12 WHEELS & MUDGUARD 110

Mud Guards - Front Axle - 2WD - 380-520 Tyre . . . 110
Mud Guards - Front Axle - 4WD - 380-520 Tyre . . . 111
Mud Guards - Rear Axle - 380-520 Tyre 112
Crop Deflectors - Front Axle - 2WD 113
Crop Deflectors - Front Axle - 4WD 114
Crop Deflectors - Rear Axle - 2WD & 4WD 115
Crop Dividers, Front, 2WD, G6, MY11 On 116
Crop Dividers, Front, 4WD, G6 MY20 117
Crop Dividers, Front, 4WD, G6 MY20 118
Crop Dividers, Rear, G6, MY17 On. 119
Crop Dividers, Rear, G6, MY17 On. 120
Crop Dividers, Nose Cone Assembly 120
Tyres & Rims 121
Tyres & Rims 122

13 BOOM CENTRE 123

Paralift Assembly - 36-48m 123
Paralift Assembly - 36-48m 124
Bump Stops & Accumulators - 36-42m. 125
Bump Stops & Accumulators - 48m. 126
Lower Limit Sensor - 36-48m 127
Height Sensor - 36-48m 128
Programmable Logic Controllers - 36-48m 129
Delta Links - 36-48m. 130
Delta Link - Long (Grease Configurations). 131
Delta Link - Short (Grease Configurations) 132
Yaw - 36m. 133
Yaw - 42m. 134
Yaw - 48m. 135
Roll Shockers - 36-48m 136
Centre Section, Tail Lights, 3TS Box & Hydraulic Hose Stack 137
Centre Section, Tail Lights, 3TS Box & Hydraulic Hose Stack 138
Boom Mounting, Fold & Tilt Pivot. 139
RH Boom Mount Hinge, Cast 140
LH Boom Mount Hinge, Cast 141
Tilt & Fold - 36m 142
Tilt & Fold - 36m 143
Tilt & Fold - 42m 144
Tilt & Fold - 42m 145
Tilt & Fold - 48m 146
Tilt & Fold - 48m 147
Hydraulic Manifold Mounting - 36-42m. 148
Hydraulic Manifold Mounting - 36-42m. 149
Hydraulic Breakaway Mounting - 36-42m 149
Hydraulic Manifold Mounting - 48m. 150
Centre Level - 36-48m. 151
Centre Level Chain Assembly - 36-48m 152
Centre Level Chain Assembly - 36-48m 153
Common Components - 36-48m. 154
Common Components - 36-48m. 155
Air Filter Regulator Assembly 156

Tilt Sensors - 36-48m 157
Tilt Sensors - 36-48m 158
Raven XRT Module - 36-48m 159
Boom , Manifold Cover 36 - 42mtr 160
Boom , Manifold Cover 48mtr. 161
Bracket, Nudge Bar Mount, Inner End, Tri-Tech 36-42mtr 162
Up to S/N 203880 162
Aluminium Spray Bar 36-42mtr 163
From S/N 203881 163
Aluminium Spray Bar 36-42mtr 164
Mounting Bracket LH - Nozzle Guard - Centre - 36-42m 164
From S/N 203881 164
Mounting Bracket RH - Nozzle Guard - Centre 36-42m 165
From S/N 203881 165
Aluminium Spray Bar - 48mtr - From S/N 203881 . . 166
Aluminium Spray Bar - 48mtr 167
Mounting Bracket LH - Nozzle Guard - Centre - 48m 167
From S/N 203881 167
Mounting Bracket LH - Nozzle Guard - Centre - 48m 168
Mounting Bracket RH - Nozzle Guard - Centre - 48m 168
From S/N 203881 168
Signage - 36-48m (Old Style) 169
Signage - 36-48m (New Style). 170
Manual Grease Station - 36-48m 171

14 BOOM WING 173

36-42m - Fold Pivot Assembly. 173
Bi-Fold Linkage Mount Assembly - 36-42m 174
36-42m - Fold Ram Assembly 175
36-42m - Fold Ram Assembly 176
36-42m - Bi-fold Boom Catch 177
Boom Wing - Inner- 36-42m - Hydraulic Lines 178
Boom Wing - Inner- 36-42m - Hydraulic Lines 179
36-42m - Nudge Bar Bracket & XRT Sensor Mounting 180
36-42m - Nudge Bar Bracket & XRT Sensor Mounting 181
Nudge Bar Guard Bracket Assembly 182
36-42m - Bi-fold Boom Catch Bracket & Mounting . . 183
36-42m - Bi-fold Boom Catch Assembly 184
36-42m - Outer Pivot Assembly 185
36-42m - Breakaway Assembly 186
36-42m - Breakaway Chain Assembly. 187
36-42m - Inner Wings & Nudge Bars. 188
36-42m - Outer Wings & Nudge Bars 188
36-42m - Break Away Tip 189
48m - Boom Pivot 190
48m - Boom Catch 191
48m - Boom Catch Assembly 192
48m - Second Stage Fold. 193
48m - Second Stage Fold. 194
48m - Second Stage Fold - Latch Assembly 195
48m - Second Stage Fold - Latch Assembly 196
48m - Second Stage Fold - Rose Ends & Boom Stops 197
Rose End Assembly - Top 198
Rose End Assembly - Bottom 198
Rose End, Forged 199
48m - Boom Bearing End Assembly. 200
48m - Second Stage Fold - Boom Protectors 201
48m - Rapid Fire Air Tank & XRT Sensor Mounting. . 202
Rapid Fire Air Tank Assembly 203
Raven XRT Sensor & Bracket Assembly 204
48m - Third Stage Fold - Cylinder Assembly. 205
48m - Third Stage Fold - Link Assembly 206
48m - Third Stage Fold - Rose Ends. 207
48m - Third Stage Fold - Rose End Linkage 208
48m - Third Stage Fold - Cylinder Mounting Assembly 209
48m - Breakaway Chain Assembly 210
48m - Breakaway - Pivot Assembly 211
48m - Nozzle Body & Blue LED Work Light Mounting 212
Work Light - Blue LED 213
48m - Nozzle Bracket & Boom Poly Clamps 214
48m - Nozzle Bracket Extension Assembly. 215
48m - Middle Section Boom Wing, Boom Poly Assemblies 216
48m - Outer Boom Wing, Boom Poly Assemblies. . . 217
48m - Breakaway - Nozzle Body Brackets 218
48m - Boom Wings Inner - Steel 219
48m - Boom Wings Mid & Outer - Aluminium 219
48m - Breakaway Aluminium Tip 219
48m - Boom Bumper & Protectors 220
48m - 3D Breakaway - End Protector 222

15 ELECTRICS 223

Fuse boxes & Relays 223
Fuse box, Chassis 224
Batteries 225
Isolator. 225

Lighting - Headlight & Indicator 226
Lighting - Bonnet LED Light Bar - Optional. 226
LED Light Bar & Front Work Light Mounting 227
Lighting - Cab Lights Rear 228
Lighting - Beacon Lights 228
Lighting - Tail Lights 229
Lighting - Service Lights 229
Lighting - Tool Box 230
Lighting - Breakaway Tip 36-42m 230
Reverse Warning Beeper 231
Horn 231
Cabin - Fuse Boxes 232
Cabin - Fuse Box Assembly #1 233
Cabin - Fuse Box Assembly #2 234
External Controller Screen & Keypad. 235
External Controller Keypad 236
Electrical Connectors - Raven - RCM & XRT 237
Electrical Connectors - Raven - RCM & XRT 238
Electrical Connectors - ISO Bus - Raven & Deutsch. . 239
Electrical Connectors - AMP 240
Electrical Connectors - AMP 241
Electrical Connectors - Deutsch 242
Electrical Connectors - Deutsch 243
Electrical Connectors - Weather Pack 244
Electrical Connectors - Weather Pack 245
Electrical Harnesses & Components 246
Electrical Harnesses & Components 247

16 SCHEMATICS 249

Hydraulic Schematic - Transmission. 249
Hydraulic Schematic - 36-42m Booms 250
Hydraulic Schematic - 36-42m Booms 251
Hydraulic Schematic - 36-42m Booms 252
Hydraulic Schematic - 36-42m Booms 253
Hydraulic Schematic - 36-42m Booms 254
Hydraulic Schematic - 36-42m Booms 255
Hydraulic Schematic - 48m Booms 256
Hydraulic Schematic - 48m Booms 257
Hydraulic Schematic - 48m Booms 258
Hydraulic Schematic - 48m Booms 259
Hydraulic Schematic - 48m Booms 260
Hydraulic Schematic - 48m Booms 261
Hydraulic Hoses - Contact Goldacres Dealer Suppport
. 262
Plumbing Schematic - Diaphragm Pump 263
Plumbing Schematic - Centrifugal Pump 264
Plumbing Schematic - Centrifugal Pump 265
Plumbing Schematic - Centrifugal Pump 266
Plumbing Schematic - Diaphragm Pump 267
Plumbing Schematic - Diaphragm Pump 268
Pneumatic Schematic - Chassis 269
Pneumatic Schematic - Chassis Hose List. 270
Fuel Line Schematic. 271
Electrical Schematic - Raven Hawkeye 272
Electrical Schematic - Raven RCM 273
Electrical Schematic - Raven Boom Options 274
Electrical Schematic - Raven XRT 275
Electrical Schematic - Autosteer 276
Electrical Schematic - CLAAS Cabin Layout 277
Electrical Schematic - Main Cabin Harness 278
Electrical Schematic - Cabin Fuse Blocks 279
Electrical Schematic - Side Console Harnesses 280
Electrical Schematic - Side Console & Joystick Operations
. 281
Electrical Schematic - Rear Panel Layout 282
Electrical Schematic - Power Distribution Layout . . . 283
Electrical Schematic - Main Chassis 284
Electrical Schematic - Main Chassis 285
Electrical Schematic - Chassis Hydraulics 286
Electrical Schematic - Bonnet Electrical. 287
Electrical Schematic - Console & PLC Harnesses . . . 288
Electrical Schematic - Transmission 289
Electrical Schematic - Boom Centre 290
Electrical Schematic - Boom Hydraulics - 36-42m . . . 291
Electrical Schematic - Boom Hydraulics - 48m. 292
Electrical Schematic - CANBUS Networks. 293
Electrical Schematic - CANBUS Networks. 294
Electrical Schematic - Electrical Harnesses 295

17 DECALS 296

Decals - Plumbing. 296
Decals - Electrical 297
Decals - Electrical & Cabin. 298
Decals - Chassis & Booms 299
Decals - Bonnet, Cabin & Tank 300
Decals - Warnings 301

18 HYDRAULICS 302

Hydraulic Oil Tank Assembly 302

Hydraulic Oil Tank Assembly 303
Hydraulic Oil Tank Frame 304
Hydraulic Oil Tank Mounting. 305
Hydraulic Oil Tank 306
Hydraulic Oil Tank Gauges 307
Hydraulic Oil Cooler Mounting 308
Hydraulic Oil Cooler Assembly 309
Steering Orbital Assembly 310
Brake Pedal Assembly 311
Manifold - Brake & Fan 312
Manifold - Brake & Fan 313
Manifold - Brake & Fan 314
Manifold - Chassis - Fixed Axle - 36m-42m 315
Manifold - Chassis - Adjustable Axle - 36m-42m . . . 316
Manifold - Chassis - Fixed Axle - 48m 317
Manifold - Chassis - 3-4m - Adjustable Axle - 48m . . 318
Manifold - Chassis. 319
Manifold - Chassis. 320
Manifold - Chassis. 321
Expansion Module - 3-4m Axles 322
Hydraulic Pressure Filter 323
Manifold - Boom Control - 48m - Front View 324
Manifold - Boom Control - 48m. 325
Manifold - Boom Control - 48m - Rear View 325
Manifold - Boom Control - 48m - Rear View 326
Manifold - Boom Control - 48m, (Cartridges & Coils) 327
Manifold - Boom Control - 48m (Function Table) . . . 328
Manifold - Boom Control - 48m (Function Table) . . . 329
Manifold - Boom Control - 36-42m. 330
Manifold - Boom Control - 36-42m. 331
Manifold - Boom Control - 36-42m. 332
Manifold - Raven XRT 5 Assembly 333
Manifold - Raven XRT 5 Manifold 334
Boom Lift Accumulator Lockout 335
Boom Bi-Fold Breakaway. 336
Cylinder - Boom Rest 36-42m. 337
Cylinder - Boom Lift 338
Cylinder - Yaw 36m. 339
Cylinder - Yaw 42-48m. 340
Cylinder, Boom Tilt, 1.5" Shaft, 36-48m (Up to S/N 204053) 341
Cylinder - Boom Tilt, 2" Shaft, 48m (From to S/N 204075) 342
Cylinder - Centre Leveling 343
Cylinder - Bi-Fold 36-42m 344
Cylinder - First Fold 36m (Up to S/N 203792) 345
Cylinder - First Fold 36m - 42m (From S/N 203792) 346
Cylinder - First Fold 48m. 347
Cylinder - First Fold 48m. 348
Cylinder - First Fold 48m (Old) 349
Cylinder - First Fold 48m (REV-05) 350
Cylinder - First Fold 48m (REV-06) 351
Cylinder - Second Stage Fold 48m 352
Cylinder - Third Stage Fold 48m (Up To S/N 203777) 353
Cylinder - Third Stage Fold 48m (From S/N 203787) 354
Cylinder - Boom Catch. 355
Cylinder Rose End - Spare Parts 356

19 PLUMBING 357

Self Cleaning Valve 357
Plumbing Control Valve Assembly. 358
Plumbing Control Valve Assembly. 359
Plumbing Control Valve Assembly. 360
Pressure Filter - Self Cleaning 361
Suction Filter 362
Suction Filter Bowl Assembly 363
Hopper Pressure Tee. 364
Flow Distributer & Recirculation Valve 365
Flow Distributer & Recirculation Valve 366
Rapidfire Regulator 367
Flow Meter 368
Flow Meter Assembly 369
Nozzles - Teejet Single Body. 370
Nozzles - Teejet Clock Face Body. 371
Nozzles - Altek Clamp 372
Nozzles - Altek Dual Spray Body 373
Nozzles - Altek Spray Stop - Push On Type 374
Nozzles - Altek Spray Stop - Push In Type 375
Nozzles - Direct Control - Single 376
Nozzles - Direct Control - Dual. 377
Nozzles - Direct Control - Dual Assembly 378
Nozzles - Fence Line - Solenoid Operated. 379
Nozzles - Tip Strainers 380
Nozzles - IDK - Cap 380
Nozzles - IDK - Tips 380
Nozzles - ID3 - Cap 381
Nozzles - ID3 - Tips 381
Nozzles - AIXR - Tips 381
NCV Control Valve - Hawkeye 2 382

Plumbing Lines - Nozzle Brackets 383
Plumbing Lines - Nozzle Bracket Kits 383
Plumbing Lines - Miscellaneous 384
Plumbing Lines - Miscellaneous 385
Boom Poly - 1" - 6000mm - 36-48m 385
Boom Plumbing 36m 386
Boom Plumbing 36m 387
Boom Plumbing 36m 388
Boom Plumbing 42m 389
Boom Plumbing 42m 390
Boom Plumbing 42m 391
Boom Plumbing 48m 392
Boom Poly - Clamps 36-42m 393
Breakaway Poly Clamps 36-42m. 394
Boom Poly - Clamps 48m 395
Hoses 396
Hose Clamps 397
Cable Ties 397
Spiral Guard 397
Chemical Probe Hose Lance. 398
Enviro Coupling & Hose 399

20 ENGINE & TRANSMISSION 400

Air-conditioning Compressor 400
Air-conditioning Compressor & Alternator (Bilberry) 401
Belt Tension Bracket, Alternator (Bilberry). 402
Bracket Assembly, Alternator (Bilberry) 403
Intake Plumbing - with Air Cleaner Bracket A 404
Intake Plumbing - with Air Cleaner Bracket B 405
Air Cleaner 406
Charge Air Intake Pipe RH. 407
Charge Air Intake Pipe LH 407
Cooling Plumbing 408
Hydraulic Pumps 409
Hydraulic Piston Pump 410
Hydraulic Gear Pumps 411
Air Governor 412
Engine Mounts 413
Engine Mounts 414
Sump Drain 414
Exhaust - Turbo Pipe 415
Exhaust Stack 416
Exhaust 417
Exhaust 418
Transmission. 419
Transmission Assembly 420
Combi Cooler 421
Combi Cooler Fittings & Fuel Cooler. 422
Combi Cooler Fan Guard 423
Combi Cooler Isolators 424
Combi Cooler Fan Motor 425
Header Tank Assembly. 426
Engine Air Divider 427
Fuel Tank 428
Fuel Filters. 429
Fuel Filter - Primary Assembly. 430

21 DRIVE LINE, TRANSFER CASE & DIFFERENTIAL 431

Front Axle - 2WD - Drop Leg 431
Front Axle - 2WD - Hub 432
Front Axle - 2WD - Steering Cylinder 433
Front Axle - 2WD - Steering Cylinder 434
Front Axle - 2WD - King Pin Assembly. 435
Front Axle - 4WD - Steering Cylinder 436
Front Axle - 4WD - Drive & King Pins 437
Front Axle - 4WD - Drive & King Pins 438
Front Axle - AWD - Steering Cylinder 439
Front Drop Leg 4WD - Lower Assembly 440
Front Drop Leg 4WD - Lower Assembly 441
Front Drop Leg 4WD - Upper Assembly 442
Front Drop Leg 4WD - Upper Assembly 443
Front Axle - Remote Breathers 444
Front Axle - Steering Sensor 2WD 444
Front Axle - Steering Sensor 4WD 445
Suspension - Front 446
3-4m Front Adjustable Axle - Dropleg 447
3-4m Front Adjustable Axle - Hub & Brake 448
3-4m Front Adjustable Axle - Steering 449
3-4m Front Adjustable Axle - Linkage & Suspension . 450
3-4m Front Adjustable Axle - Suspension 451
3-4m Front Adjustable Axle - Crop Deflectors 452
3-4m Front Adjustable Axle - Brake Covers 453
3-4m Front Adjustable Axle - Housing 454
3-4m Front Adjustable Axle - Housing 455
3-4m Front Adjustable Axle - Wear Pads & Shims . . 456
3-4m Front Adjustable Axle - Air Bag 457
3-4m Front Adjustable Axle - RH Slider 457

3-4m Front Adjustable Axle - LH Slider 458
Rear Axle - Drop Leg Mounting. 459
Rear Axle - Sway Bar & Torque Rods. 460
Rear Axle - Airbags & Shocks 461
Rear Axle - Sway Bar Link 462
Rear Axle - Drive Shafts - (Up to S/N 204075) 463
Rear Axle - Drive Shaft, Diff/ Drop Leg (Up to S/N 204075) 464
Rear Axle - Drive Shafts - (From S/N 204087) 465
Rear Axle - Drive Shaft, Diff/ Drop Leg (From S/N 204087) 466
Rear Axle - 3-4m Adjustable 467
Rear Axle - Sway Bar Mounts 468
Suspension - Miscellaneous 468
Rear Axle - Differential. 469
Rear Axle - Differential. 470
Rear Drop Leg - Lower Assembly. 471
Rear Drop Leg - Lower Assembly. 472
Rear Drop Leg - Upper Assembly. 472
Rear Drop Leg - Upper Assembly. 473
Ride Height Valve - Front 474
Ride Height Valves - Rear 475
Drive Shafts - 2WD 476
Drive Shafts & Transfer Case - 4WD. 477
Drive Shafts & Transfer Case - 4WD. 478
Transfer Case - 4WD - Axle Engage 479
Transfer Case - 4WD - Rear Housing 480
Transfer Case - 4WD - Power Take Off 481
Transfer Case - 4WD - Input Shaft 482
Transfer Case - 4WD - Ouput Shaft 483

22 CABIN 484

Cabin - Claas 484
Extension Bracket, Side Mirror 485
Cabin - Claas 487
Cabin - Claas 488
Cabin - Assembled 489
Cabin - Assembled 490
Cabin - Overhead Components. 490
Cabin - Right Corner Panel 491
GPS Accessories Bar 492
Fuse Box Cover Mount 493
Seat & Side Console 494
Seat - Upper Section 495
Seat - Lower Section 496
Side Console - G-Hub Display Assembly 497
Side Console - Joystick Assembly 498
Side Console - Common Parts 499
Side Console - Common Parts 500
Side Console - Boom Switches - 36-42m. 501
Side Console - Boom Switches - 48m. 501
Left Foot Rest. 502
Pedal Assembly 503
Cabin - Carbon Filter - Pre S/N 105840 504
Carbon Filter - Ultraguard MY11 - MY23 Up to S/N 105839 505
Carbon Filter - Ultraguard MY24 - From S/N 105840 506
Carbon Filter - Ultraguard MY24 - S/N 105840. . . . 507
ISOBUS Connector Plate 508
John Deere Roof Mount 509

23 BRAKES 511

Brakes - Front 2WD 511
Brakes - Front 4WD 512
Brakes - Rear 2WD & 4WD. 513
Brakes - Covers - Front 2WD. 514
Brakes - Covers - Front 4WD. 515
Brakes - Covers - Rear 2WD & 4WD 516
Brake Line Parts. 517
Caliper - Service Brakes 518
Caliper - Park Brake 519

24 SERVICE PARTS & INFORMATION 521

Paint 521
Goldacres G15 - Corrosion Inhibitor 521
Service Parts - Lubricants 522
Service Parts - Belts 523
Service Parts - Filters. 523
Service Kits 523
GA1100062, Service Kit, Series 2 G6, MY20, 50hr . . 523
Service Kits - Continued 524
GA1100063, SERVICE KIT, SERIES 2 G6, MY20, 250HR & 750HR 524
GA1100064, SERVICE KIT, SERIES 2 G6, MY20, 500HR 524
GA1100065, SERVICE KIT, SERIES 2 G6, MY20, 1000HR 525
Service Parts - Headlights 525

Chapter 1

CHASSIS

Chassis

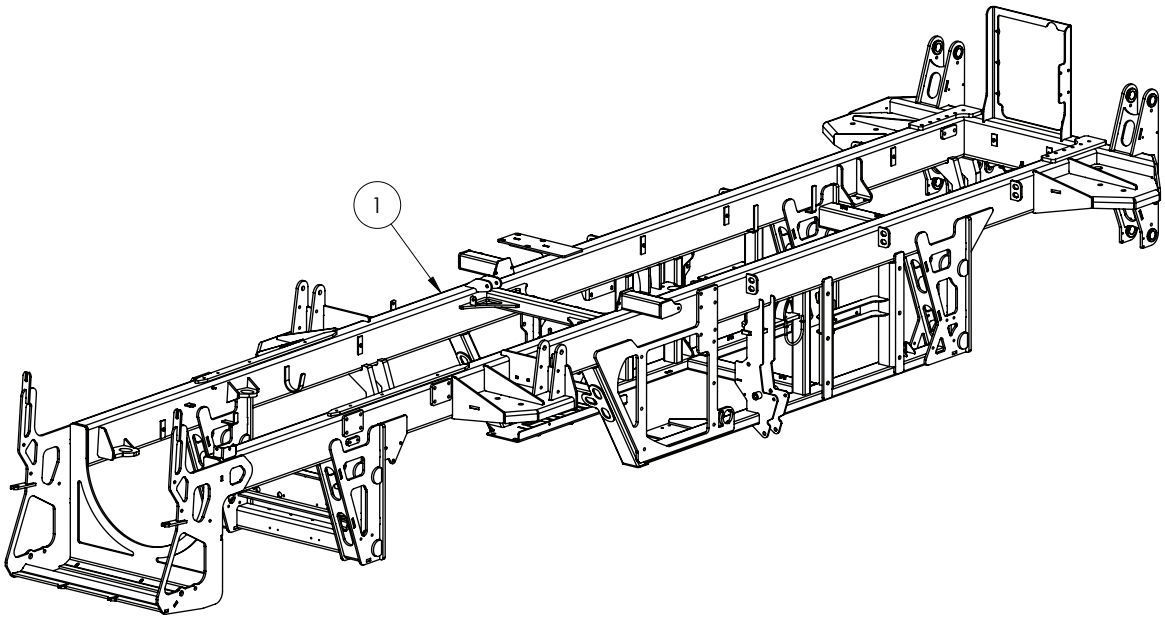

ITEM NO.	PART NUMBER	DESCRIPTION	QTY.
1	GA4602295	CHASSIS	1

Access Platform - Ladder

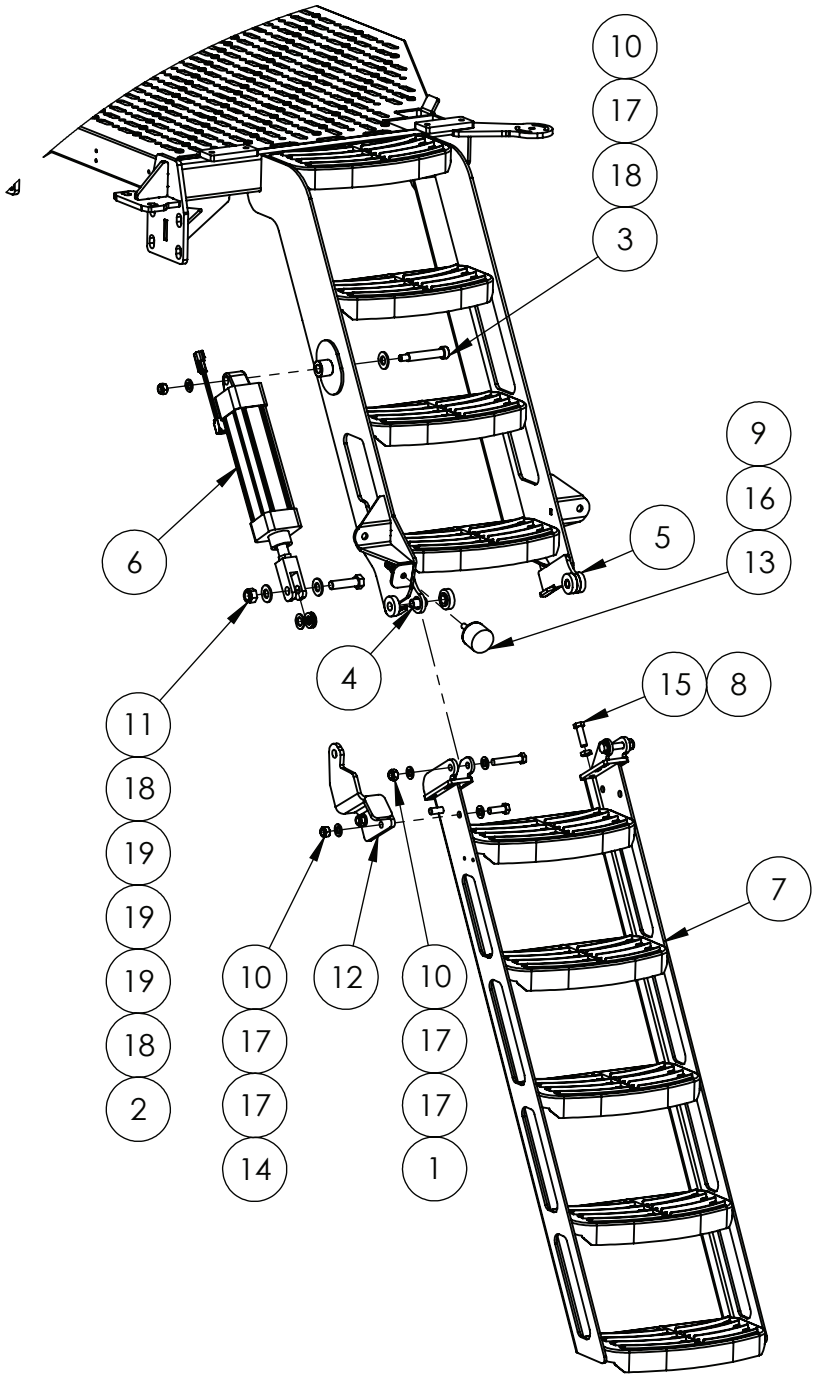

ITEM NO.	PART NUMBER	DESCRIPTION	QTY.
1	GA5000339	BOLT M12 X 65 GR8.8 ZP	2
2	GA5000941	BOLT M16 X 60 GR8.8 ZP	1
3	GA5069165	BOLT SHOULDER SHCS M16 X 80 GR12.9 ZP	1

Continued over page

Access Platform - Ladder

ITEM NO.	PART NUMBER	DESCRIPTION	QTY.
4	GA4553025	BUSH LADDER PIVOT SP MY13	2
5	GA4553030	BUSH NYLON LADDER PIVOT SP MY13	4
6	GA4949445	CYLINDER, PNEUMATIC, LADDER, ASSEMBLY	1
7	GA4603695	LADDER, G4 G6 G8, CABIN ACCESS, MY21	1
8	GA5071280	M12 PLAIN NUT HALF	2
9	GA5000141	NUT M10 NYLOC ZP	1
10	GA5012461	NUT M12 NYLOC ZP	5
11	GA5001029	NUT M16 NYLOC ZP	1
12	GA4603700	PLATE, LADDER CYLINDER MOUNT, LH FITMENT, MY21	1
13	GA5052815	RUBBER STOPPER, DIAMETER 50 X 35 LONG, WITH M10 X 35 STUD	1
14	GA5000311	SET SCREW M12 X 35 GR 8.8 ZP	2
15	GA5000319	SET SCREW M12 X 40 GR8.8 ZP	2
16	GA5000117	WASHER 10mm FLAT SS HD	1
17	GA5000577	WASHER 12mm FLAT SS HD	9
18	GA5001043	WASHER 16mm FLAT SS HD	3
19	GA5069810	WASHER- NYLON 16 ID X 30 OD X 2	3

Pneumatic Cylinder - Ladder Assembly

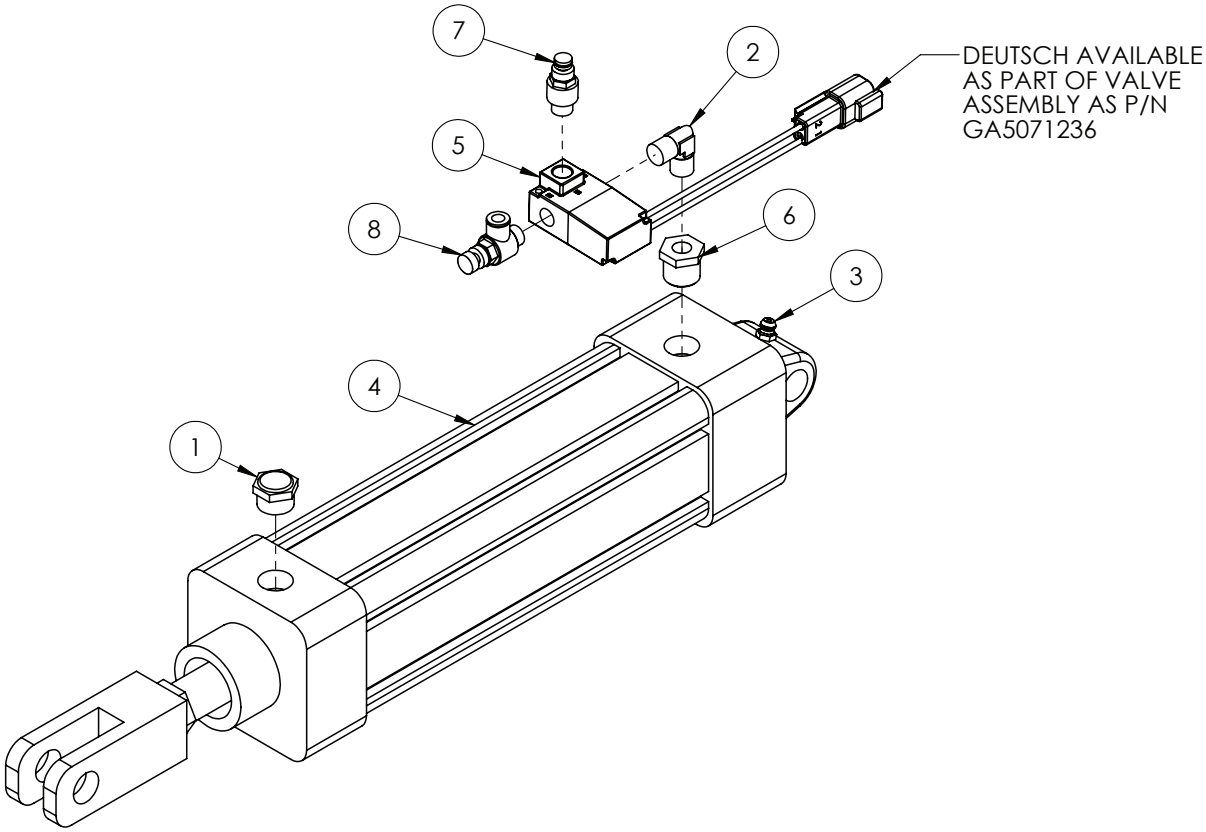

ITEM NO.	PART NUMBER	DESCRIPTION	QTY.
1	GA7000001	BRASS BREATHER SILENCER 3/8 BSP FLAT	1
2	GA7000012	ELBOW, 1/8" BSP, MALE TO MALE, 0914 00 10, PNEUTECH	1
3	GA5050450	GREASE NIPPLE, 6mm	1
4	GA5069674	PNEUMATIC CYLINDER 63 X 175mm	1
5	GA5071236	PNEUMATIC SOLENOID VALVE MAC 35 SERIES 1/8" PORTS WITH DEUTSCH CONNECTOR	1
6	GA7000011	REDUCING BUSH, 3/8" BSPP – 1/8 BSPP", 0904 10 17, PNEUTECH	1
7	GA7000014	RESTRICTOR, ADJUSTABLE EXHAUST, ET-01, PNEUTECH	1
8	GA7000013	VALVE, FLOW CONTROL 6mm X 1/8 BSP, METER IN, JSC6-01B, PNEUTECH	1

Access Platform - Hand Rails

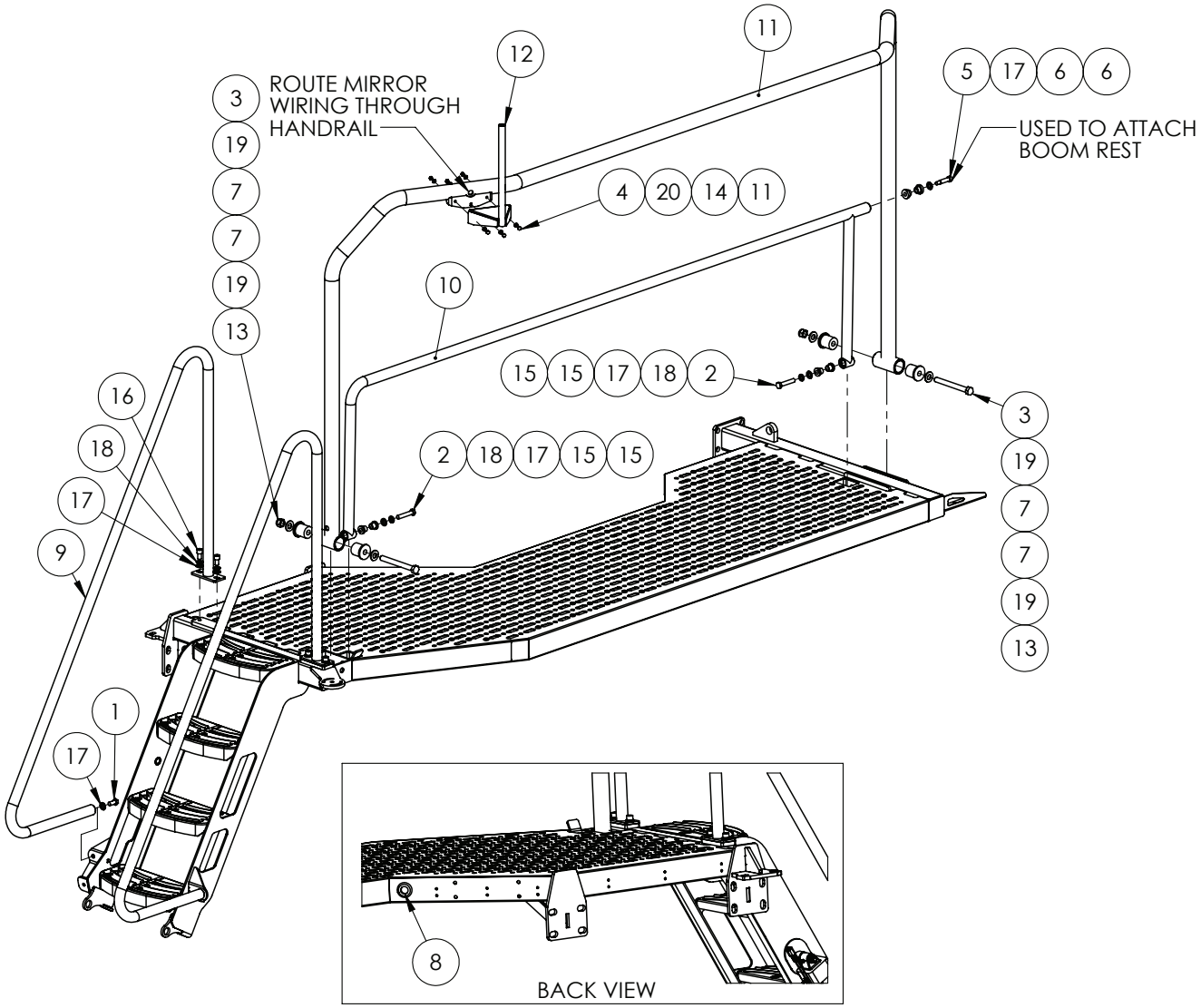

STEP TREAD

PART NUMBER	DESCRIPTION
GA5070520	STEP TREAD PRESSED, 370MM WIDE UNPAINTED - WELD IN

ITEM NO.	PART NUMBER	DESCRIPTION	QTY.
-	GA4602340	PLATFORM, LH ACCESS, G6	1
1	GA5011229	BOLT M12 X 25 GR8.8 ZP	2
2	GA5000339	BOLT M12 X 65 GR8.8 ZP	2
3	GA5000869	BOLT M16 X 150 GR8.8 ZP	2
4	GA5004063	BOLT M6 X 20 SS A-70	3

Continued over page

Access Platform - Hand Rails

ITEM NO.	PART NUMBER	DESCRIPTION	QTY.
5	GA5069160	BOLT SHOULDER SHCS M12 X 40 GR12.9 ZP	1
6	GA4551250	BUSH, FOLDING HAND RAIL, WHITE NYLON, G6 MY20	2
7	GA4551255	BUSH, MAIN HAND RAIL CUSHION MOUNT, G6 MY20	4
8	GA5069855	GROMMET, RUBBER, 28 X 1.6 X 35MM, WIRING	1
9	GA4602350	HANDRAIL, LADDER ACCESS, G6 MY20	2
10	GA4602360	HANDRAIL, PLATFORM FOLDING RAIL, G6 MY20	1
11	GA4602355	HANDRAIL, PLATFORM MAIN, G6 MY20	1
12	GA4658810	MIRROR MOUNT-LH-SP 2011	1
13	GA5001029	NUT M16 NYLOC ZP	2
14	GA5048115	NUT M6 NYLOC ZP	3
15	GA4553055	NYLON BUSH MID HANDRAIL	4
16	GA5050330	SHCS M12 X 20 GR12.9 ZP	4
17	GA5000577	WASHER 12mm FLAT SS HD	9
18	GA5000575	WASHER 12mm SPRING SS	6
19	GA5001043	WASHER 16mm FLAT SS HD	4
20	GA5004437	WASHER 6mm FLAT SS	6

Access Platform - Boom Rest Left Side 36-42m

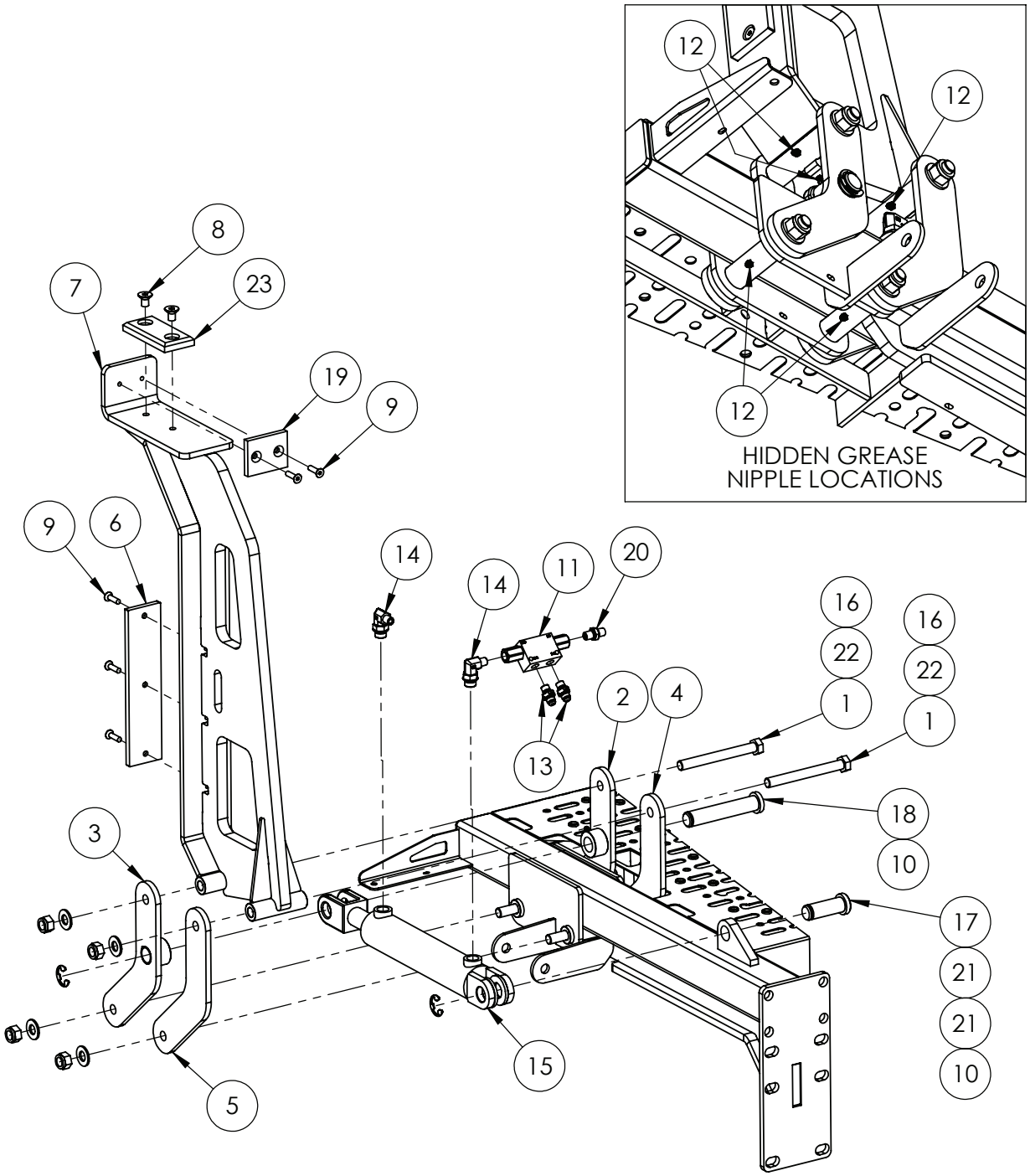

ITEM NO.	PART NUMBER	DESCRIPTION	QTY.
1	GA5000869	BOLT M16 X 150 GR8.8 ZP	4
2	GA4602370	BOOM REST LINKAGE A, G6 MY20	1
3	GA4602375	BOOM REST LINKAGE B, G6 MY20	1

Continued over page

Access Platform - Boom Rest Left Side 36-42m

ITEM NO.	PART NUMBER	DESCRIPTION	QTY.
4	GA4602380	BOOM REST LINKAGE C, G6 MY20	1
5	GA4405690	BOOM REST LINKAGE D, G6 MY20	1
6	GA5073730	BOOM REST WEAR PAD, G6 MY20	1
7	GA4602365	BOOM REST, TRITECH 24-42M, LH, G6 MY20	1
8	GA5070860	CSCS M12 X 20 GR12.9 ZP	2
9	GA0500014	CSCS M8 X 20, ZP, GR12.9	5
10	GA5001223	CIRCLIP, 19mm, E TYPE, ZINC PLATED	2
11	GA5007957	DOUBLE PILOT CHECK (RA) 12LPM 1/4 BSPP	1
12	GA5050450	GREASE NIPPLE, 6mm	6
13	GA3500544	HYDRAULIC ADAPTOR NIPPLE, 1/4” BSP O-RING X 9/16” JIC, S74-0409	2
14	GA3500348	HYDRAULIC ADAPTOR, ELBOW, 90 DEGREE, 1/4” BSPT MALE X 3/4” UN MALE O-RING	2
15	GA5069110^	HYDRAULIC CYLINDER 2”X1.25”X6” STROKE	1
16	GA5001029	NUT M16 NYLOC ZP	4
17	L054A	PIN WITH SHOULDER AND CIRCLIP GROOVE, 1” DIAMETER X 71 LONG	1
18	GA4552835	PIN- HYD CYLINDER TO BOOM REST SP 2011	1
19	GA4550730	PLASTIC WEAR STRIP, BOOM REST SADDLE, G3V G4V	1
20	GA4562025	RESTRICTOR NIPPLE 1/4 BSPT 0.5mm ORIFICE	1
21	GA5017659	WASHER 1 FLAT ZP HD (5mm THICK)	2
22	GA5001043	WASHER 16mm FLAT SS HD	4
23	GA4550055	WEAR SLIDE PLATE BOOM REST BOTTOM 2015	1

^ See Chapter 18 ‘Hydraulics’ for sub-assembly

Access Platform - Boom Rest Left Side 48m

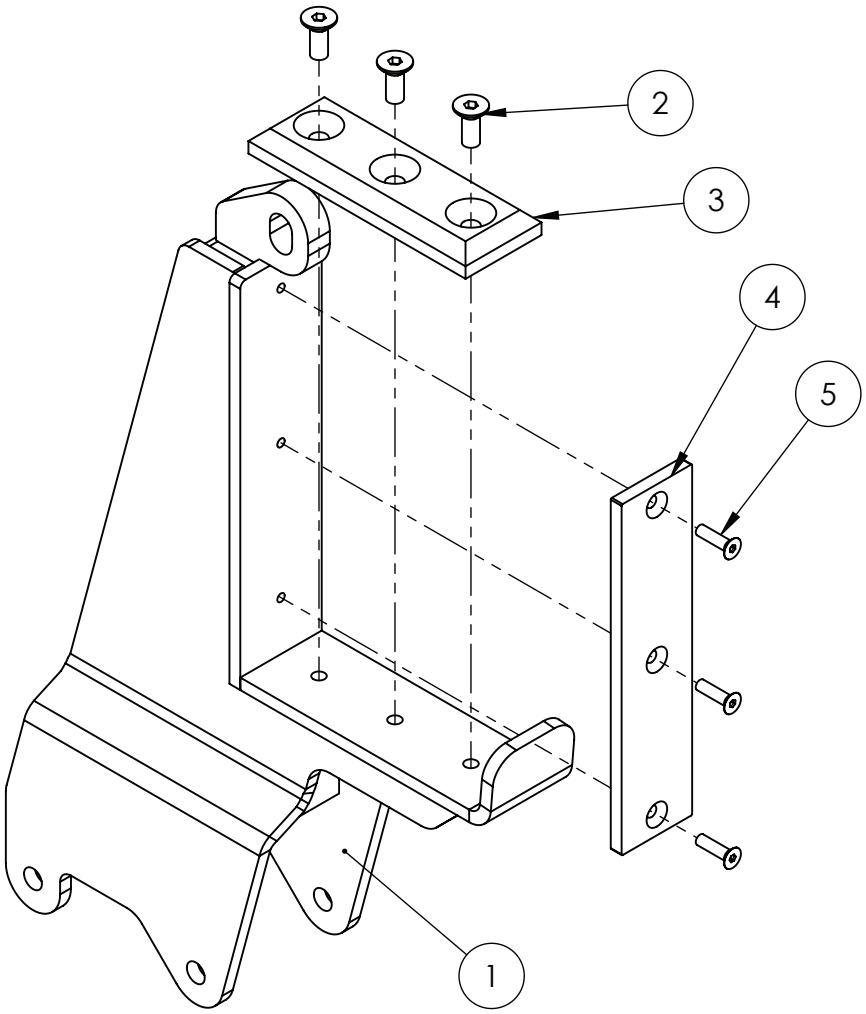

NOTE: Mounting fasteners used are the same as for the 36-42m boom rest.

ITEM NO.	PART NUMBER	DESCRIPTION	QTY.
1	GA4602515	BOOM REST, TRITECH 48M, LH	1
2	GA5051290	CSCS M12 X 30 GR12.9 ZP	3
3	GA4550795	PLASTIC WEAR PAD, LOWER, BOOM REST, 48M BOOM	1
4	GA5073730	BOOM REST WEAR PAD	1
5	GA0500014	CSCS M8 X 20, ZP, GR12.9	3

Access Platform - Step

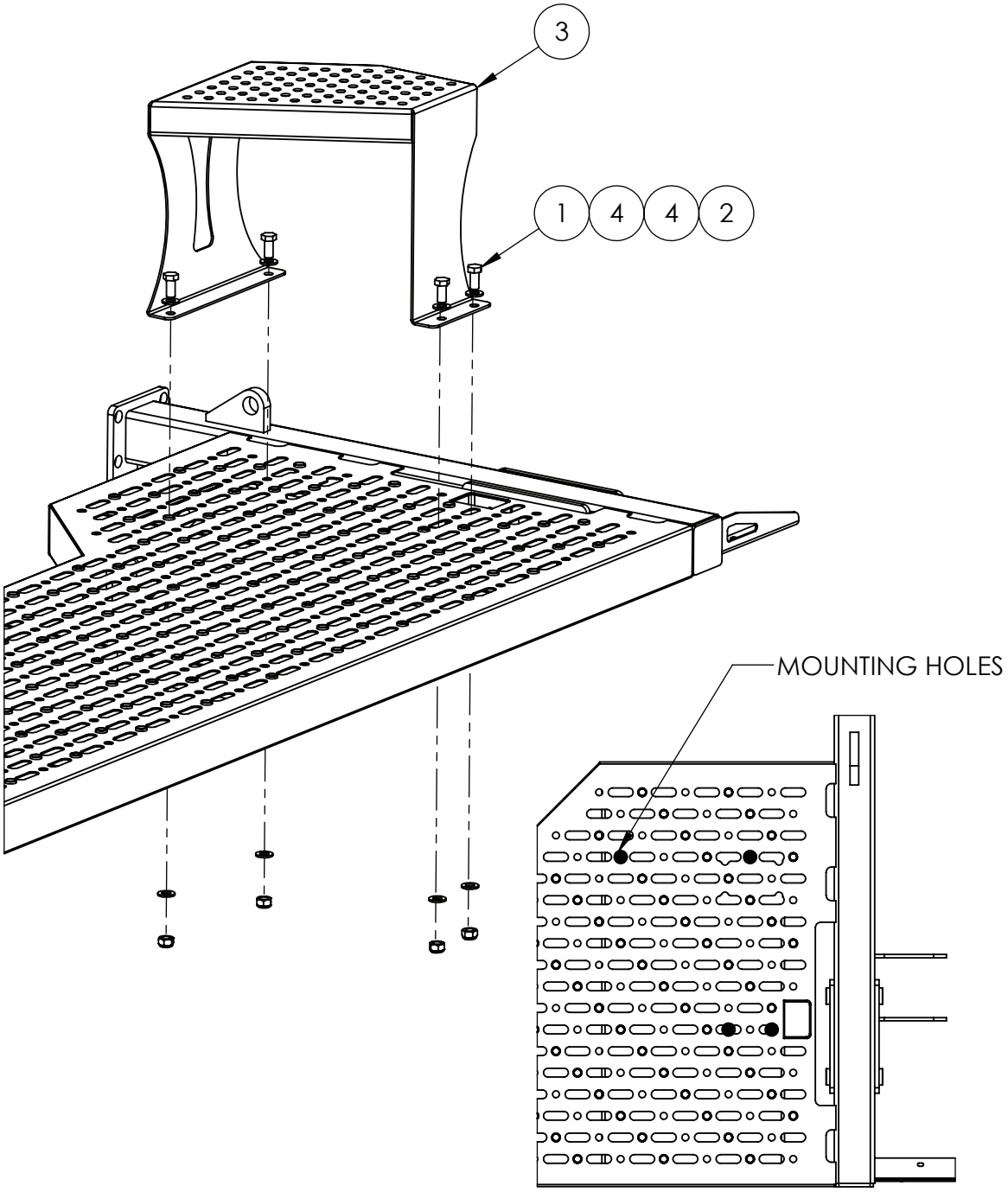

ITEM NO.	PART NUMBER	DESCRIPTION	QTY.
1	GA5011229	BOLT M12 X 25 GR8.8 ZP	4
2	GA5012461	NUT M12 NYLOC ZP	4
3	GA4406950	PLATE, THREAD STEP, BOLT ON, PLATFORM, G6 MY20	1
4	GA5000577	WASHER 12mm FLAT SS HD	8

Boom Rest - Right Side 36-42m

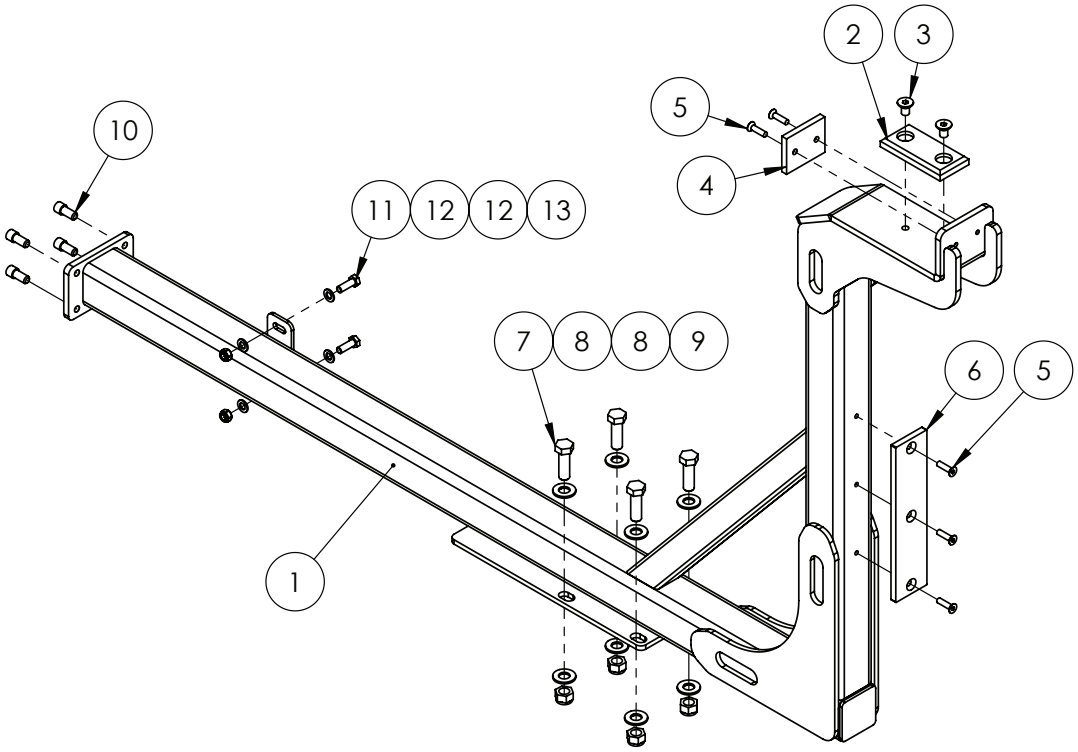

ITEM NO.	PART NUMBER	DESCRIPTION	QTY.
1	GA4602390	BOOM REST CROSS MEMBER, RH	1
2	GA4550055	WEAR SLIDE PLATE BOOM REST BOTTOM	1
3	GA5070860	CSCS M12 X 20 GR12.9 ZP	2
4	GA4550730	PLASTIC WEAR STRIP, BOOM REST SADDLE	1
5	GA0500014	CSCS M8 X 20, ZP, GR12.9	5
6	GA5073730	BOOM REST WEAR PAD	1
7	GA5000931	BOLT M16 X 50 GR8.8 ZP	4
8	GA5001043	WASHER 16MM FLAT SS HD	8
9	GA5001029	NUT M16 NYLOC ZP	4
10	GA5000905	SHCS M16 x 25 GR12.9 ZP	4
11	GA5065455	BOLT M10 X 30 GR8.8 ZP	2
12	GA5000117	WASHER 10MM FLAT SS HD	4
13	GA5000141	NUT M10 NYLOC ZP	2

Boom Rest - Right Side 48m

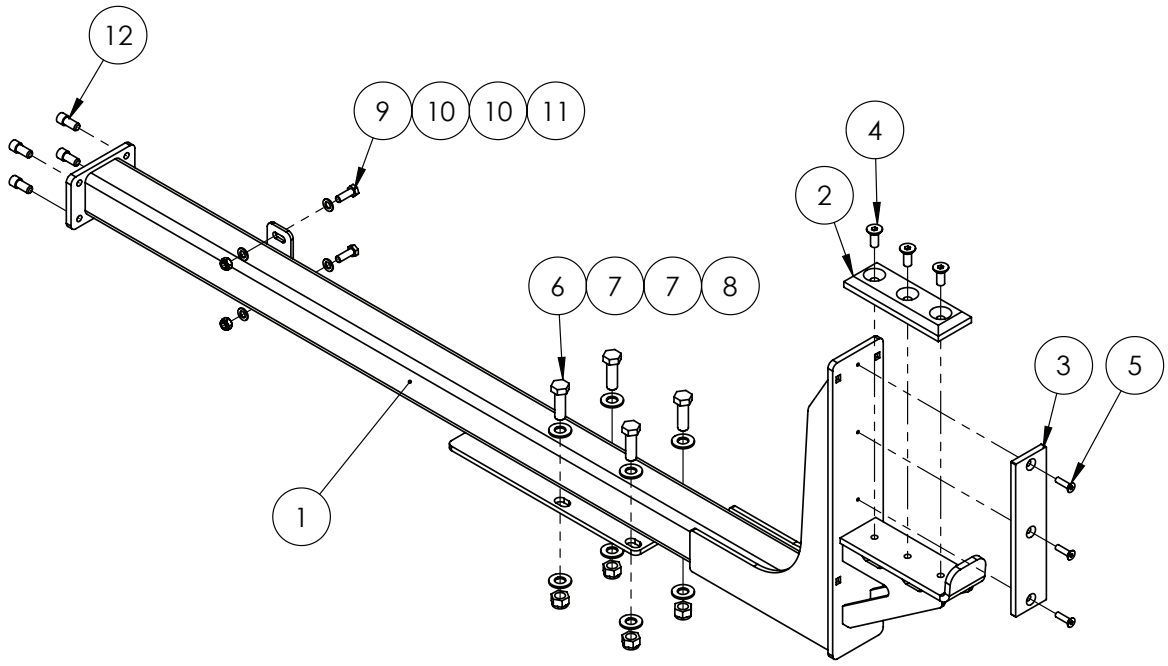

ITEM NO.	PART NUMBER	DESCRIPTION	QTY.
1	GA4602520	BOOM REST, TRITECH 48M, RH	1
2	GA4550795	PLASTIC WEAR PAD, LOWER, BOOM REST, 48M BOOM	1
3	GA5073730	BOOM REST WEAR PAD	1
4	GA5051290	CSCS M12 X 30 GR12.9 ZP	3
5	GA0500014	CSCS M8 X 20, ZP, GR12.9	3
6	GA5000931	BOLT M16 X 50 GR8.8 ZP	4
7	GA5001043	WASHER 16MM FLAT SS HD	8
8	GA5001029	NUT M16 NYLOC ZP	4
9	GA5065455	BOLT M10 X 30 GR8.8 ZP	2
10	GA5000117	WASHER 10MM FLAT SS HD	4
11	GA5000141	NUT M10 NYLOC ZP	2
12	GA5000905	SHCS M16 x 25 GR12.9 ZP	4

Access Platform - Right Side

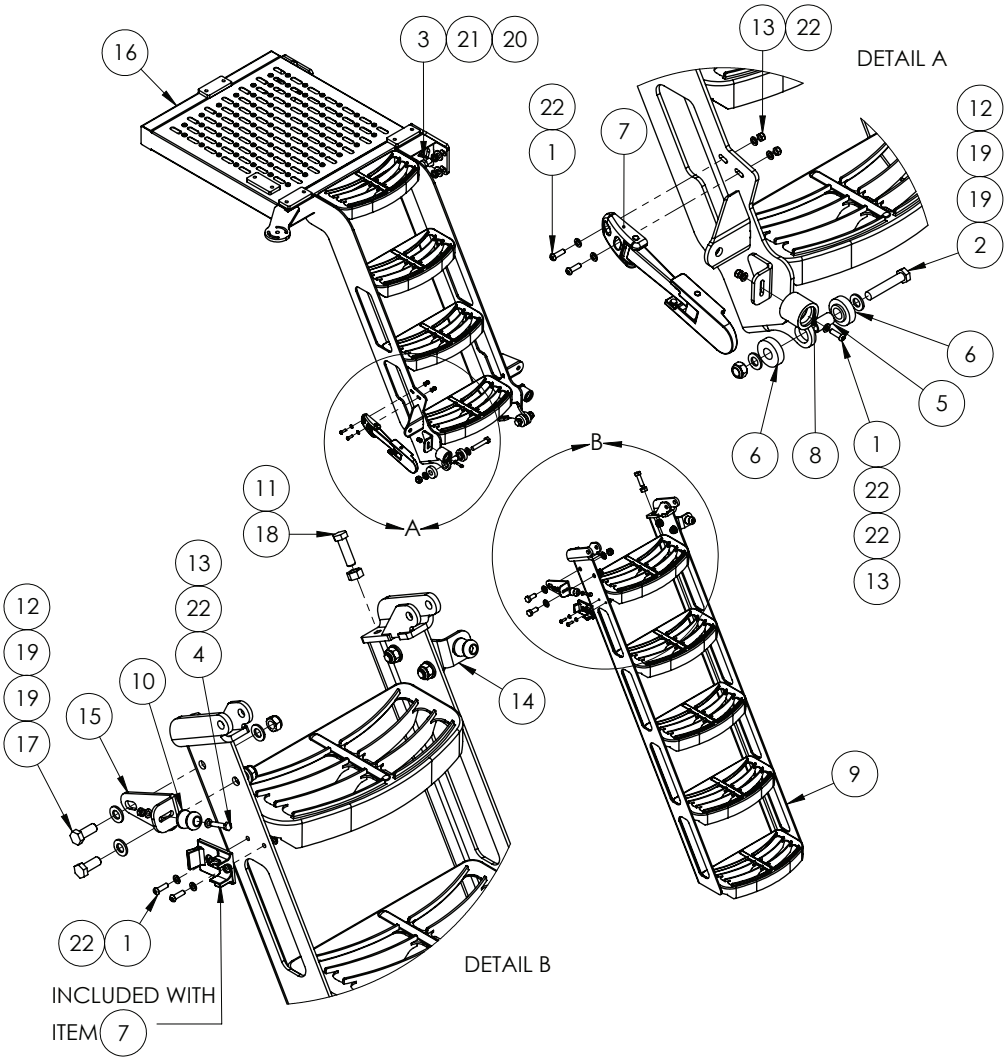

ITEM NO.	PART NUMBER	DESCRIPTION	QTY.
1	GA5004053	BHCS M6 X 20 SS A2-70	6
2	GA5000339	BOLT M12 X 65 GR8.8 ZP	2
3	GA5000903	BOLT M16 X 25 GR8.8 ZP	8
4	GA5004077	BOLT M6 X 30 GR8.8 ZP	2
5	GA4553025	BUSH LADDER PIVOT SP MY13	2
6	GA4553030	BUSH NYLON LADDER PIVOT SP MY13	4
7	GA5066595	LATCH, SUIT CROP CRUISER BONNET & LADDER	1
8	GA5008629	DOOR HOLDER, FEMALE, RUBBER, BLACK	2
9	GA4603695	LADDER, G4 G6 G8, CABIN ACCESS, MY21	1
10	GA5011607	DOOR HOLDER, MALE, RUBBER, BLACK	2
11	GA5000559	NUT M12 HEX ZP	2
12	GA5012461	NUT M12 NYLOC ZP	6
13	GA5048115	NUT M6 NYLOC ZP	8
14	GA4408450	PLATE, LOWER LADDER, LH RUBBER HOLDER MOUNT, RH PLATFORM, G6, MY20	1

Continued over page

Access Platform - Right Side

ITEM NO.	PART NUMBER	DESCRIPTION	QTY.
15	GA4408115	PLATE, LOWER LADDER, RH RUBBER HOLDER MOUNT, RH PLATFORM, G6, MY20	1
16	GA4602905	PLATFORM ACCESS FABRICATION, RH, G6 MY20	1
17	GA5000305	SET SCREW M12 X 30 GR8.8 ZP	4
18	GA5000319	SET SCREW M12 X 40 GR8.8 ZP	2
19	GA5000577	WASHER 12MM FLAT SS HD	12
20	GA5001043	WASHER 16MM FLAT SS HD	8
21	GA5001051	WASHER 16MM SPRING SS	8
22	GA5004437	WASHER 6MM FLAT SS	16

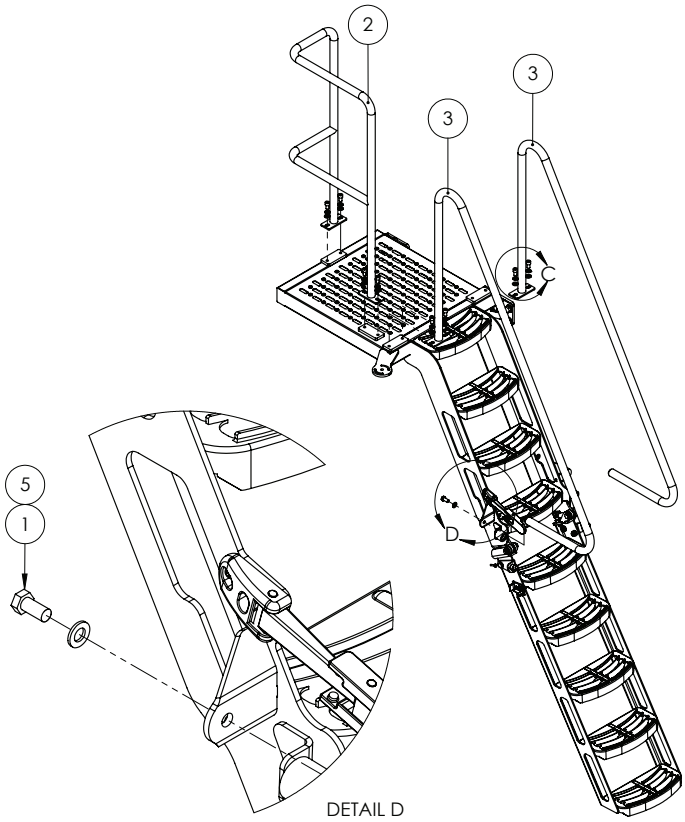

ITEM NO.	PART NUMBER	DESCRIPTION	QTY.
1	GA5011229	BOLT M12 X 25 GR8.8 ZP	2
2	GA4602910	HANDRAIL, ACCESS PLATFORM, RH, G6 MY20	1
3	GA4602350	HANDRAIL, LADDER ACCESS, G6 MY20	2
4	GA5050330	SHCS M12 X 20 GR12.9 ZP	8
5	GA5000577	WASHER 12MM FLAT SS HD	10
6	GA5000575	WASHER 12MM SPRING SS	8

Left Hand Mirror

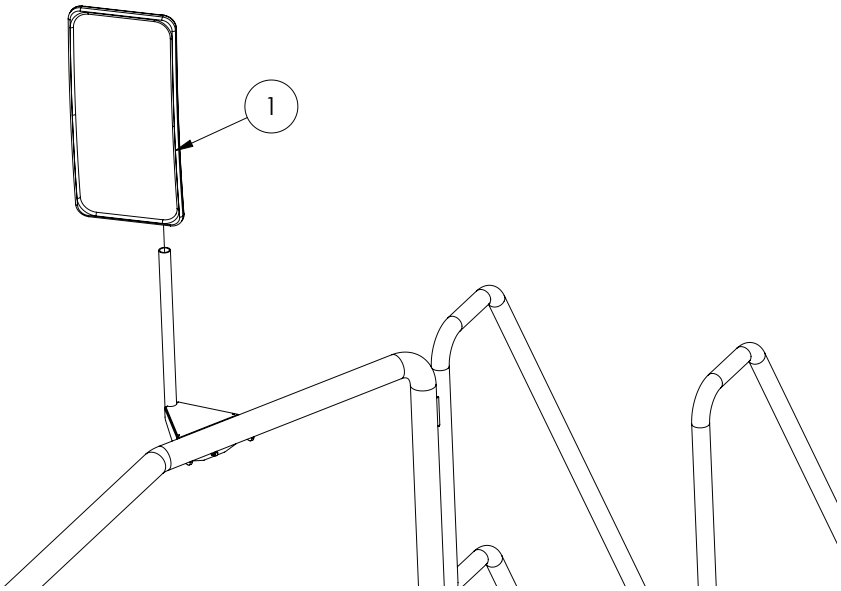

ITEM NO.	PART NUMBER	DESCRIPTION	QTY.
-	GA5054125	SIDE MIRROR GLASS	-
-	GA5054130	COVER CAP MIRROR	-
-	GA5069795	GROMMET, RUBBER, 28 OD X 7 THICK, MATERIAL UP TO 2MM THICK	-
1	GA5054120	SIDE MIRROR, COMPLETE ASSEMBLY	1

Bonnet

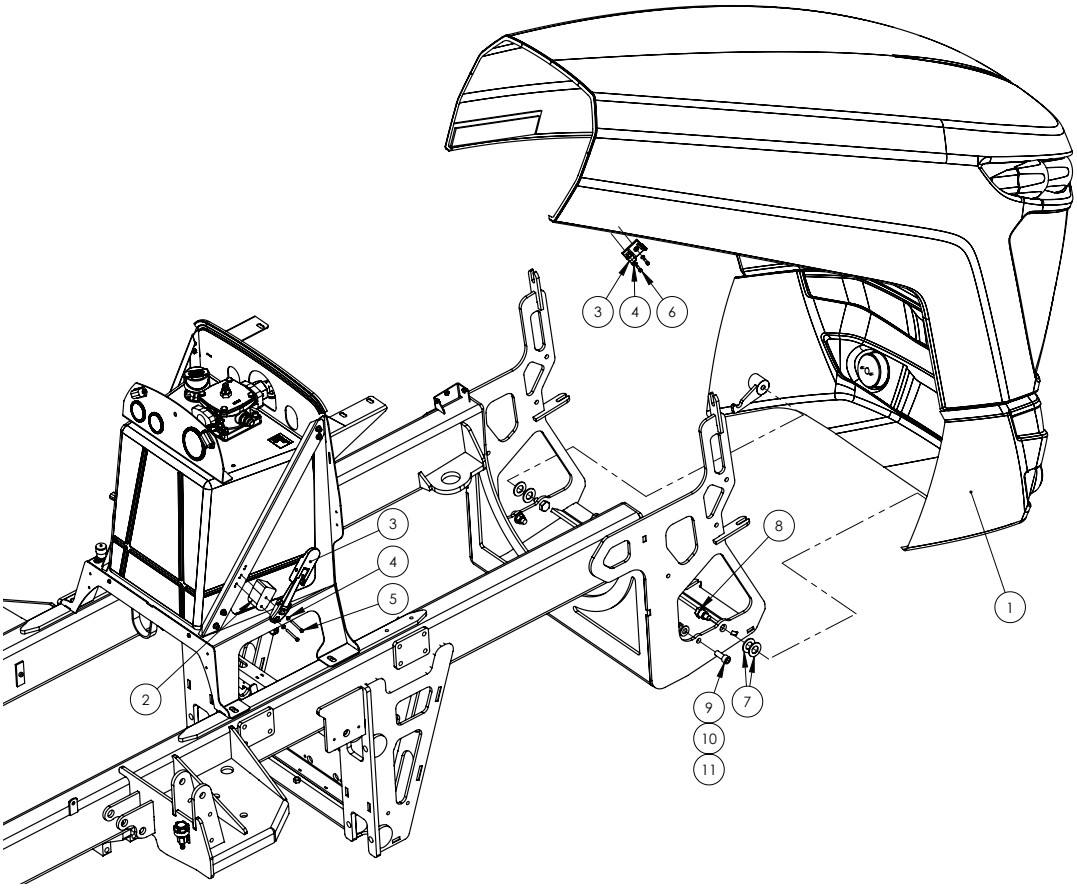

BONNET SPARE PARTS

PART NUMBER	DESCRIPTION
GA3000082	GLOBE, HB3, 12V, 60W, NARVA
GA3000492	HEADLIGHT, HB3, LED, PACK OF 2, 9-32 VOLT, COOL WHITE, 5000LM
GA5075415	INDICATOR / RUNNING LIGHT ASSEMBLY, LED
GA5072720	BONNET GRILL MESH, SUIT GA5072135 AND GA5072145, 2015 - 2019 DESIGN, NO CENTER SUPPORT (ONE PIECE FRONT MESH)

ITEM NO.	PART NUMBER	DESCRIPTION	QTY.
1	GA5072135	BONNET, CROP CRUISER, G6, G8, 2015 - ON	1
2	GA4502630	SPACER BLOCK, BONNET LATCH, HDPE	2
3	GA5066595	LATCH, SUIT CROP CRUISER BONNET & LADDER	2
4	GA5004437	WASHER 6MM FLAT SS	8
5	GA5070460	SHCS M6 X 60 SS A2-70	4
6	GA5004055	SHCS M6 X 20 GR12.9 ZP	4
7	GA0500078	WASHER, 1” ID X 1 7/8” OD X 1/8” THICK, NYLON	4
8	GA4552765	BOLT SHOULDER, SUIT SP BONNET	2
9	GA5000925	SHCS M16 X 40 GR12.9 ZP	2
10	GA5001043	WASHER 16MM FLAT SS HD	2
11	GA5001029	NUT M16 NYLOC ZP	2

Bolt-in Crossmember

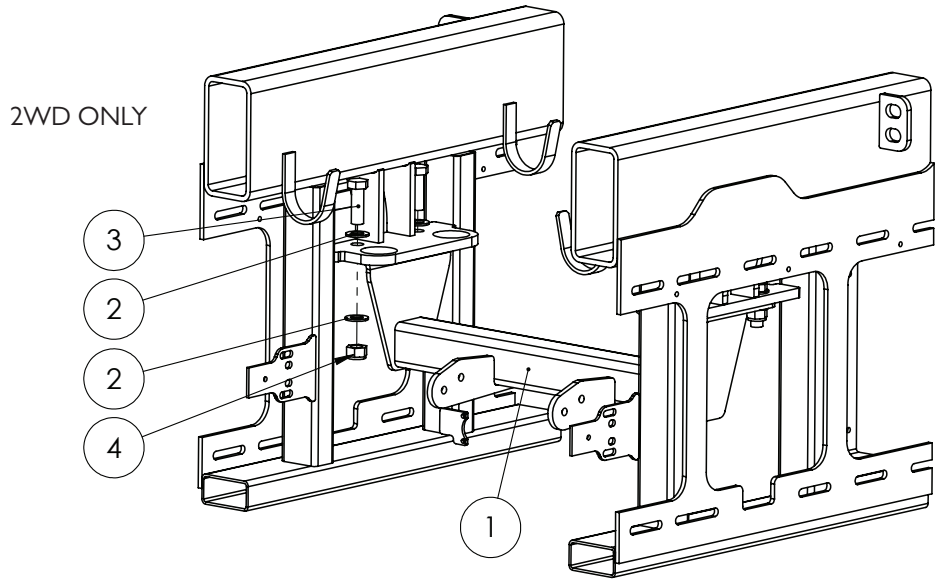

ITEM NO.	PART NUMBER	DESCRIPTION	QTY.
1	GA4658415	CROSS MEMBER BOLT IN	1
2	GA5001741	WASHER 20MM FLAT SS HEAVY DUTY	8
3	GA5011333	BOLT M20 X 60 ZP GR8.8	4
4	GA5048125	NUT M20 NYLOC COARSE ZP	4

Hydraulic Pump Guard

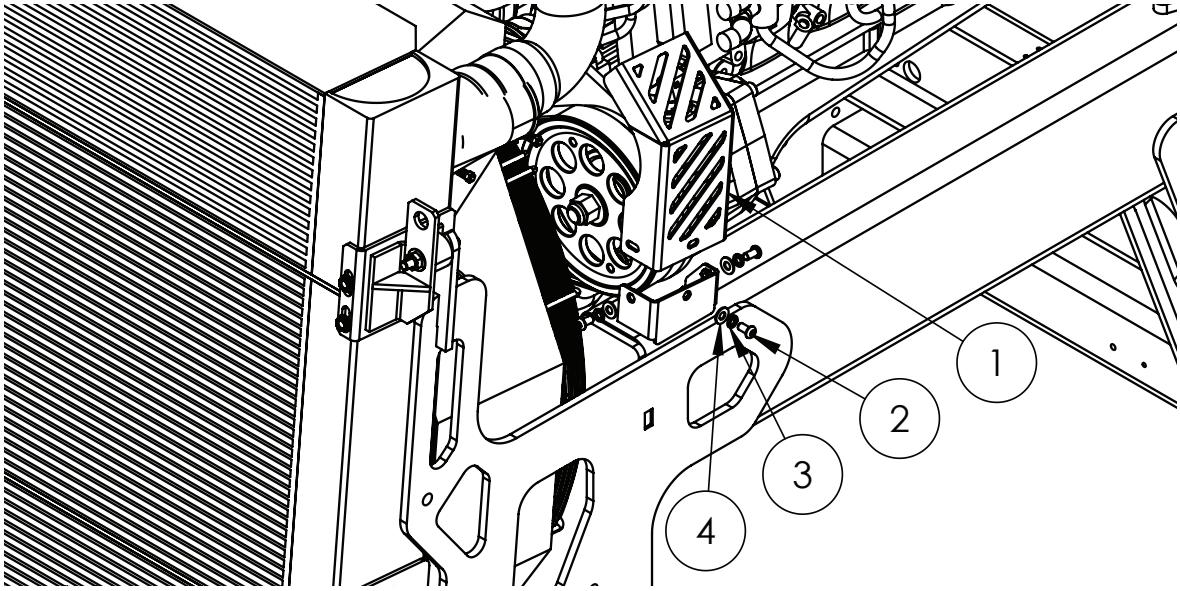

ITEM NO.	PART NUMBER	DESCRIPTION	QTY.
1	GA4507145	PUMP PULLEY GUARD PLATE	1
2	GA5004696	BHCS M8 X 16 SS A2-70	3
3	GA5004919	WASHER 8MM SPRING SS	3
4	GA5003643	WASHER 8MM FLAT SS HD	3

Air Dryer

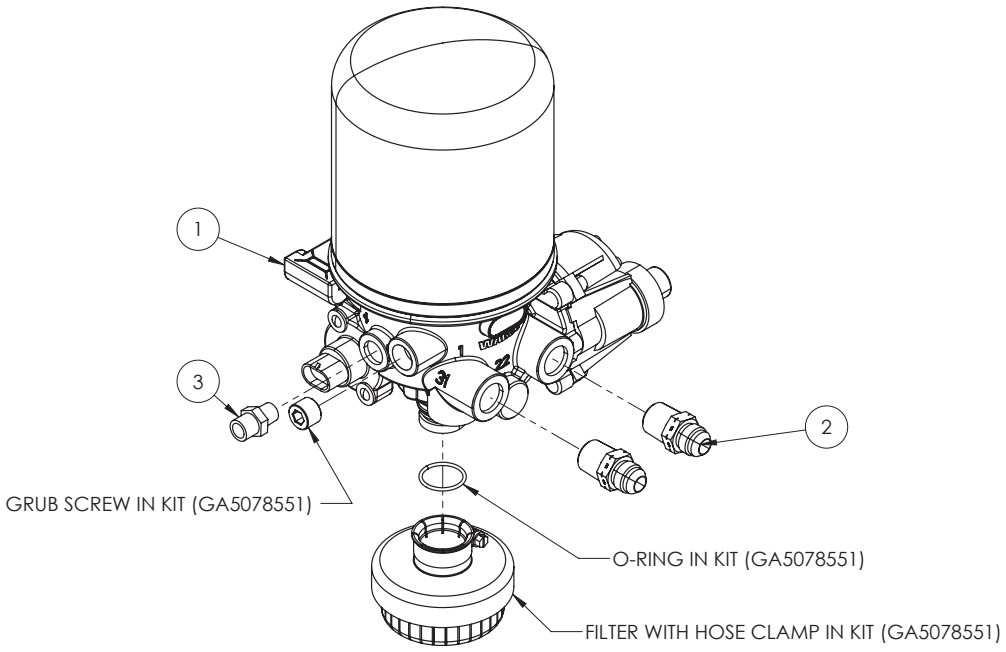

FILTER & CARTRIDGE

PART NUMBER	DESCRIPTION
GA7000021	FILTER/SILENCER, AIR DRYER, WABCO
GA7000022	CARTRIDGE, AIR DRYER, WABCO

ITEM NO.	PART NUMBER	DESCRIPTION	QTY.
1	GA5078551	AIR DRYER, SINGLE CANISTER	1
2	GA3500760	HYDRAULIC ADAPTER, NIPPLE, 1/2” NPT MALE X 3/4” JIC MALE	2
3	GA5078517	AIR FITTING, STRAIGHT, 3/8” TUBE, 1/4” NPT MALE, BRASS	1

Drain Point Fittings

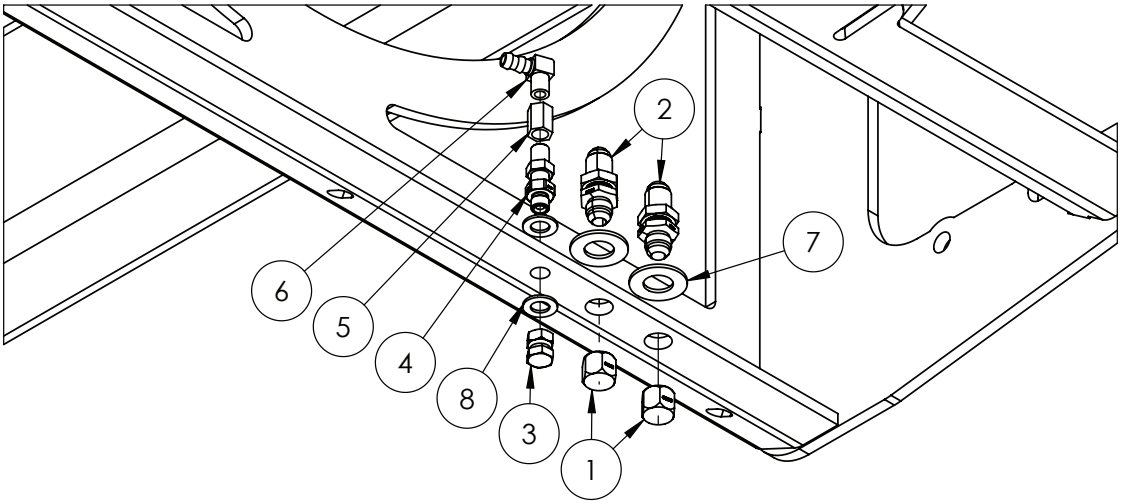

ITEM NO.	PART NUMBER	DESCRIPTION	QTY.
1	GA3500794	HYDRAULIC ADAPTOR, PLUG, 3/4” JIC FEMALE	2
2	GA3500803	HYDRAULIC ADAPTOR, BULKHEAD NIPPLE, 3/4” JIC MALE X 3/4” JIC MALE	2
3	GA3500277	CAP, SWIVEL, 1/4” BSPP FEMALE	1
4	GA3500249	HYDRAULIC ADAPTOR, BULKHEAD NIPPLE, 1/4” BSPP MALE X 1/4” BSPP MALE	1
5	GA5066940	SOCKET, 1/4" FEMALE THREAD, HEX, BRASS	1
6	GA5049290	ELBOW 1/4" MALE THREAD X 3/8" BARB BRASS	1
7	GA5001045	WASHER 3/4" FLAT ZP	2
8	GA5017655	WASHER 1/2" FLAT SS	2

Hose Hanger

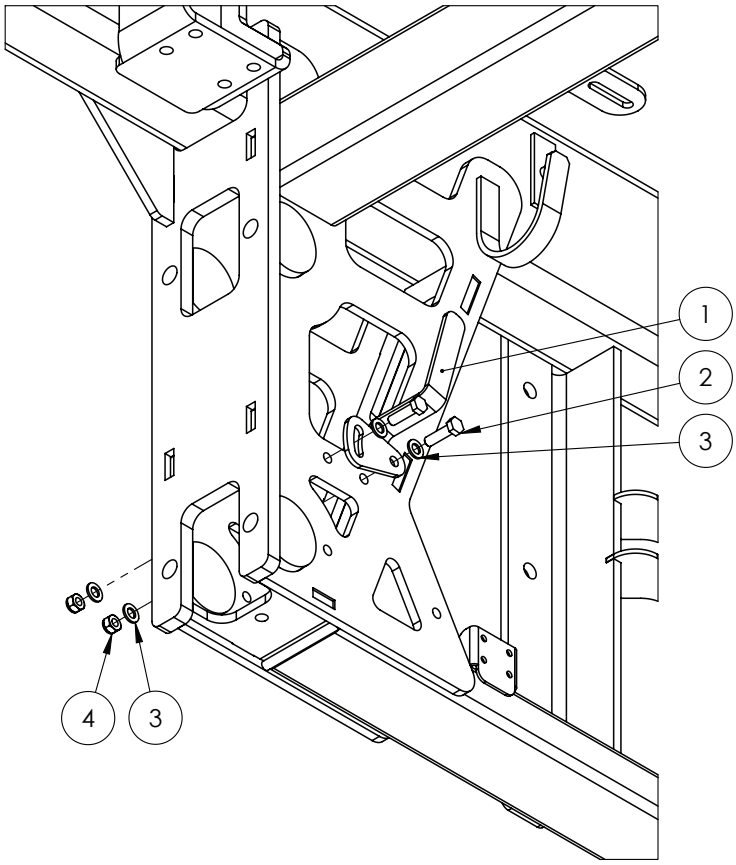

ITEM NO.	PART NUMBER	DESCRIPTION	QTY.
1	GA4406925	BRACKET, HOSE HOOK, LH REAR SUSPENSION A FRAME	1
2	GA5006111	BOLT M10 X 35 GR8.8 ZP	2
3	GA5000117	WASHER 10MM FLAT SS HD	4
4	GA5000141	NUT M10 NYLOC ZP	2

Tool Box Cover & Mounting

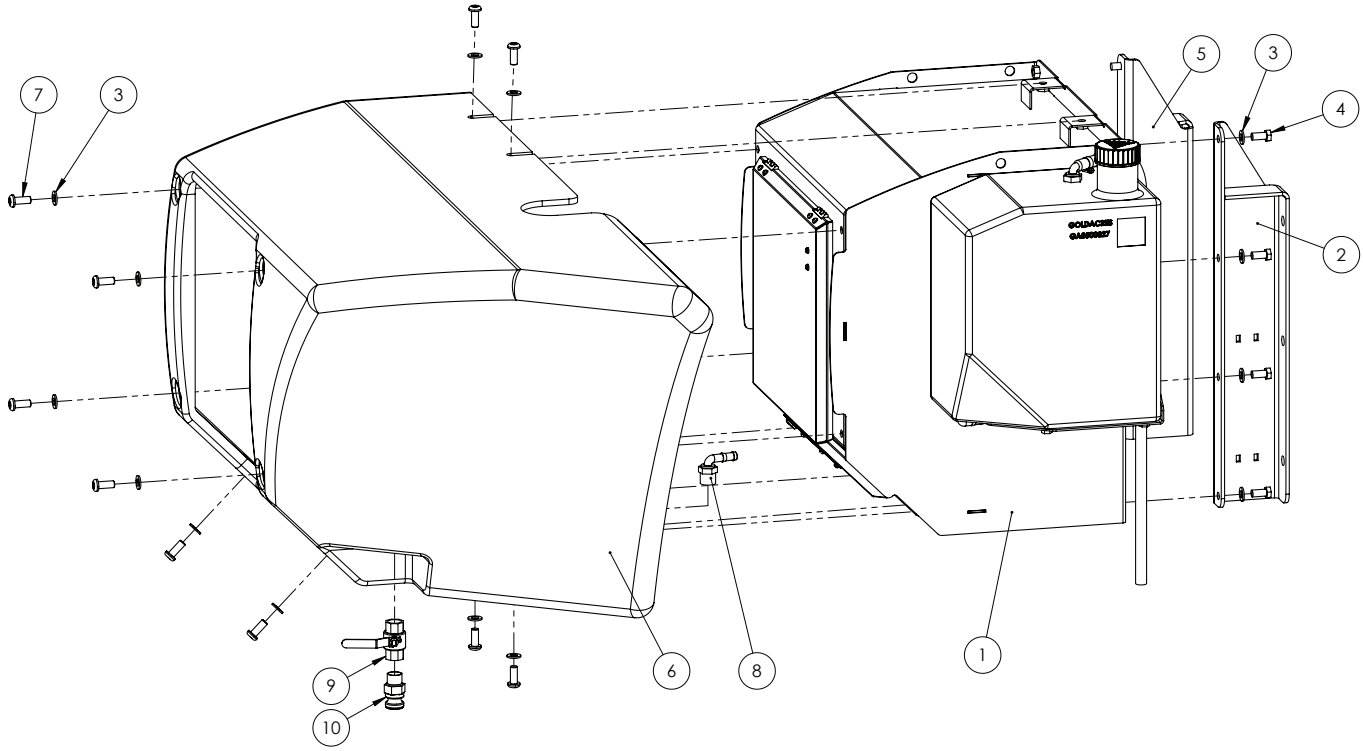

ITEM NO.	PART NUMBER	DESCRIPTION	QTY.
1	*	TOOL BOX ASSEMBLY	1
2	GA4405880	BRACKET, TOOL BOX MOUNT B	1
3	GA5000577	WASHER 12MM FLAT SS HD	18
4	GA5011229	BOLT M12 X 25 GR8.8 ZP	8
5	GA4405875	BRACKET, TOOL BOX MOUNT A	1
6	GA5078500	COVER, TOOL BOX POD, ROTOMOULDED PLASTIC, BLACK	1
7	GA5051530	BHCS M12 X 30 SS A2-70	10
8	GA5077710	HOSE BARB, ELBOW, 90 DEGREE, 3/4" MALE THREAD X 1/2" HOSE	1
9	GA5018313	VALVE, BALL, 20MM, 3/4" FEMALE, LEVER HANDLE, BRASS	1
10	GA5077134	CAM LEVER, 3/4" MALE COUPLING X 3/4" MALE THREAD	1

* Sub-assembly on following pages

Tool Box Frame Assembly

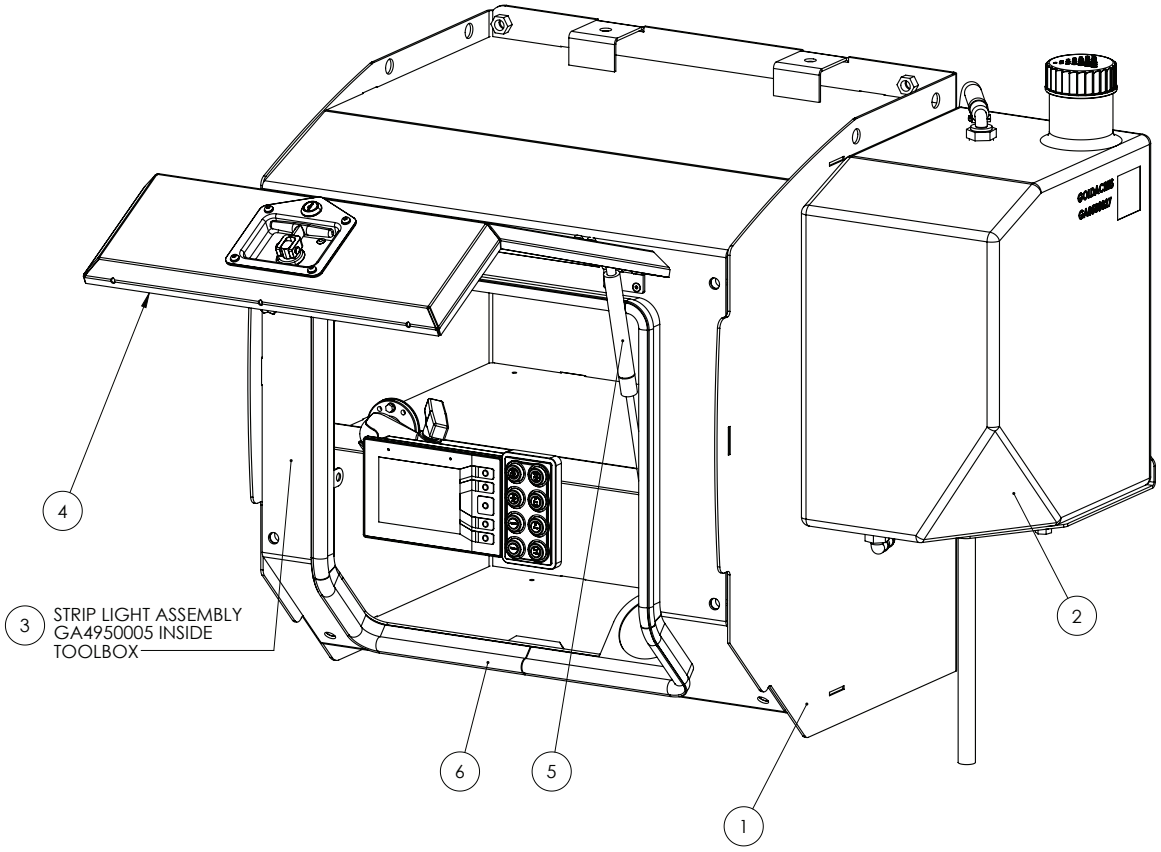

ITEM NO.	PART NUMBER	DESCRIPTION	QTY.
1	*	FRAME ASSEMBLY	1
2	*	HAND WASH TANK ASSEMBLY	1
3	~	LIGHT, LED STRIP LIGHT ASSEMBLY	1
4	*	DOOR ASSEMBLY, TOOLBOX	1
5	GA5078511	GAS STRUT, 6/18 DIAMETER, 325 EXTENDED LENGTH, 123MM STROKE, BALL ENDS 10MM, 250N	1
6	GA5072700	PINCHWELD, TOP BLISTER, 16.3MM X 30MM - CUT TO 1750 MM	1

~ See Chapter 15 'Electrics' for sub-assembly

* Sub-assembly on following pages

Tool Box Frame Assembly (First Design)

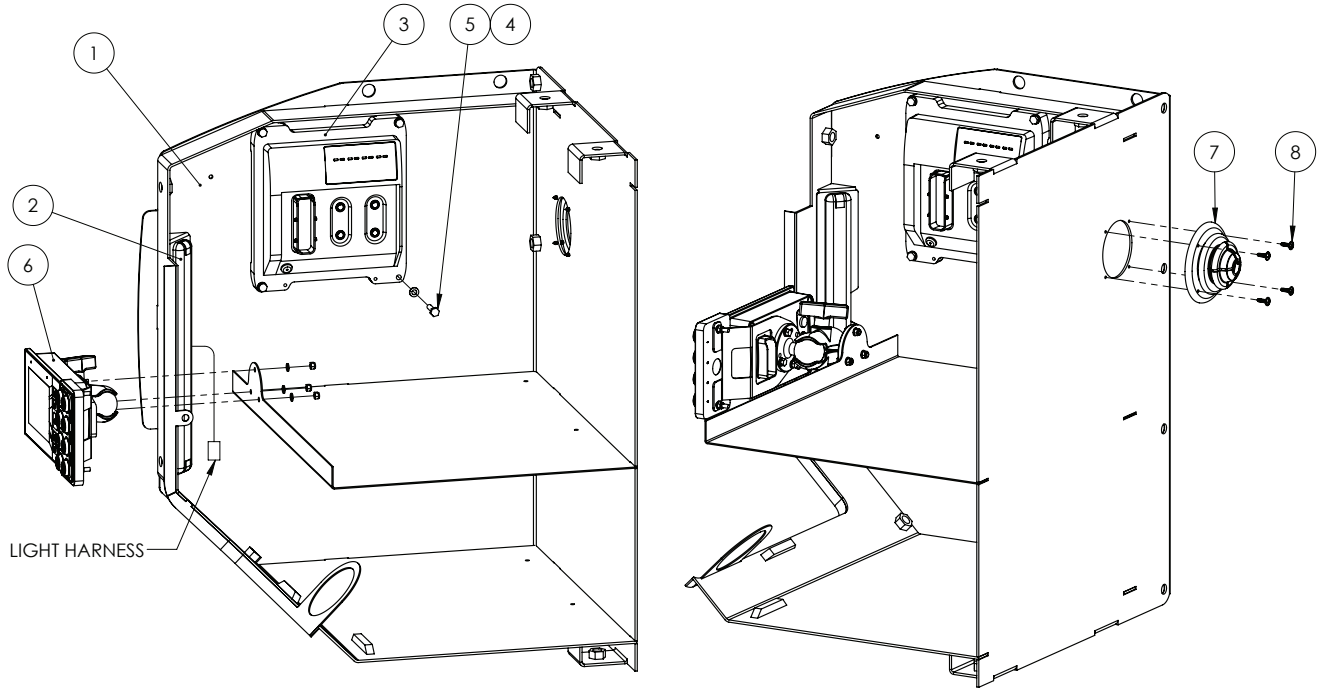

ITEM NO.	PART NUMBER	DESCRIPTION	QTY.
1	GA4602405	TOOL BOX FRAME	1
2	~	LIGHT, LED STRIP LIGHT, ASSEMBLY	1
3	GA3000311	PLC, G6 MACHINE CONTROLLER MY20, CR711S, IFM	1
4	GA5004437	WASHER 6MM FLAT SS	4
5	GA5004073	BOLT M6 X 25 GR8.8 ZP	4
6	~	EXTERNAL CONTROLLER SCREEN & KEYPAD ASSEMBLY	1
7	GA5069725	GROMMET, SLOP STOP, BLACK, 105 X 60 MM	1
8	GA5054395	SCREW MUSHROOM HEAD, BLACK SELF TAPPER, 4.2 X 16 MM	4

~ See Chapter 15 'Electrics' for sub-assembly

Tool Box Frame Assembly (Second Design)

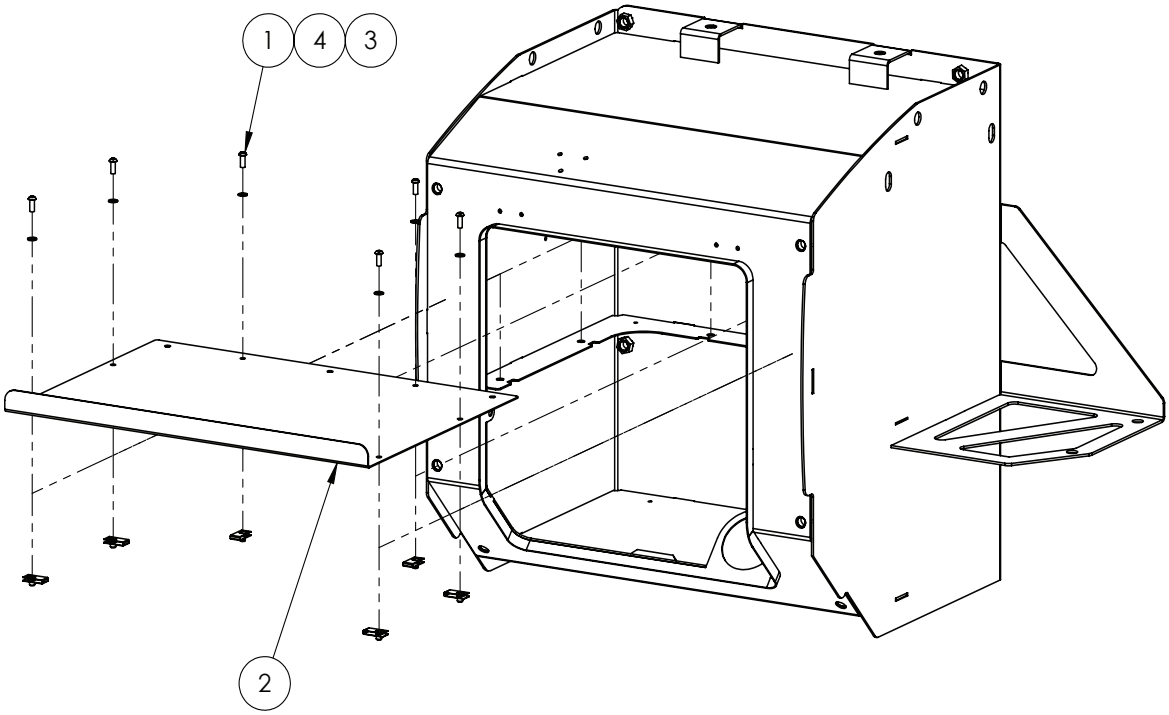

ITEM NO.	PART NUMBER	DESCRIPTION	QTY.
1	GA5004047	BHCS M6 X 16 GR12.9 ZP	6
2	GA4411710	PLATE, SHELF, TOOL BOX FRAME, G6 MY20	1
3	GA5066830	SPEED CLIP M6	6
4	GA5004437	WASHER M6 FLAT SS	6

Hand Wash Tank Mounting

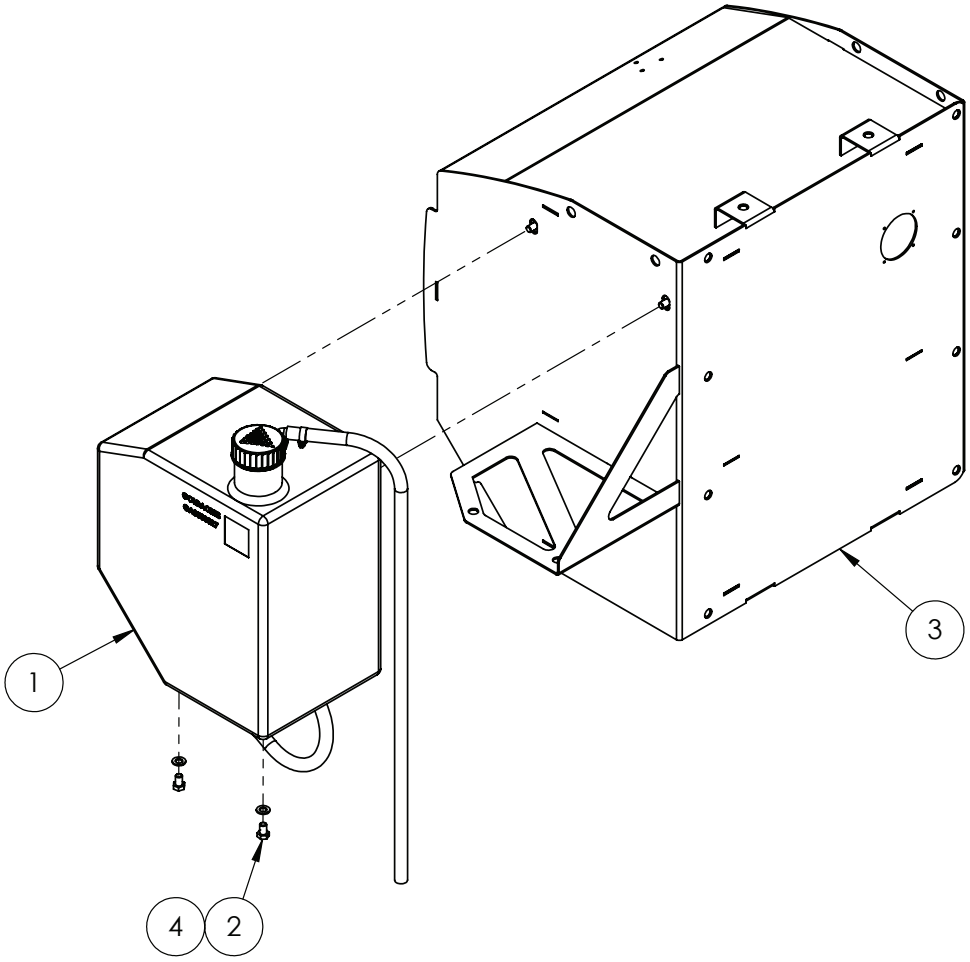

ITEM NO.	PART NUMBER	DESCRIPTION	QTY.
1	*	ASSEMBLY DRAWING ONLY, HAND WASH ASSEMBLY, G6, MY20	1
2	GA5006143	BOLT M10 X 16 GR8.8 ZP	4
3	GA4602405	TOOL BOX FRAME, G6 MY20	1
4	GA5000117	WASHER M10 FLAT SS HD	4

* Assembly On Following Page

Continue Over Page

Hand Wash Tank Assembly

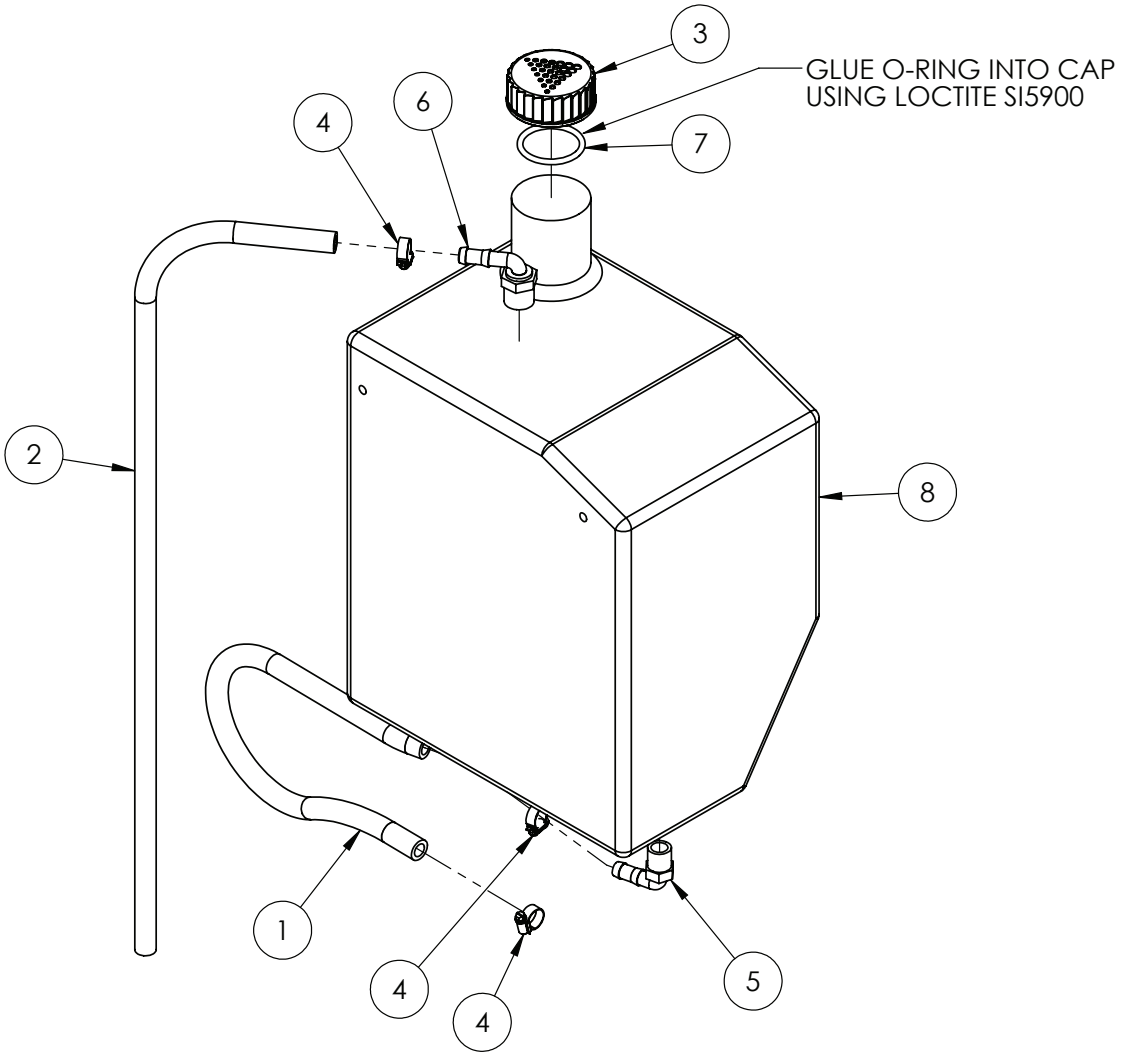

ITEM NO.	PART NUMBER	DESCRIPTION	QTY.
1	GA2000211	HOSE, PRESSURE, 12MM, BLACK, 250PSI, HOS13P, CUT TO 500MM	1
2	GA2000211	HOSE, PRESSURE, 12MM, BLACK, 250PSI, HOS13P, CUT TO 1000MM	1
3	GA5075400	CAP, TANK, PLASTIC, LID, M65.5X8 THREAD, BLACK, GOLDACRES LOGO, O RING NOT INCLUDED	1
4	GA5000469	HOSE CLAMP, 1/2" SS 12-20/9W3	3
5	GA5077708	HOSE BARB, ELBOW, 90 DEGREE, 1/2 MALE THREAD X 1/2 HOSE, BANJO, HB050-90	1
6	GA5077710	HOSE BARB, ELBOW, 90 DEGREE, 3/4 MALE THREAD X 1/2 HOSE, BANJO, HB075/050-90	1
7	GA5009187	O RING, 60 OD, 50 ID X 5MM, SUITS EXACTA TANK CAP	1
8	GA8500027	TANK, HAND WASH, 30L, G6, MY20	1

Tool Box Display Screen Mounting (Second Design)

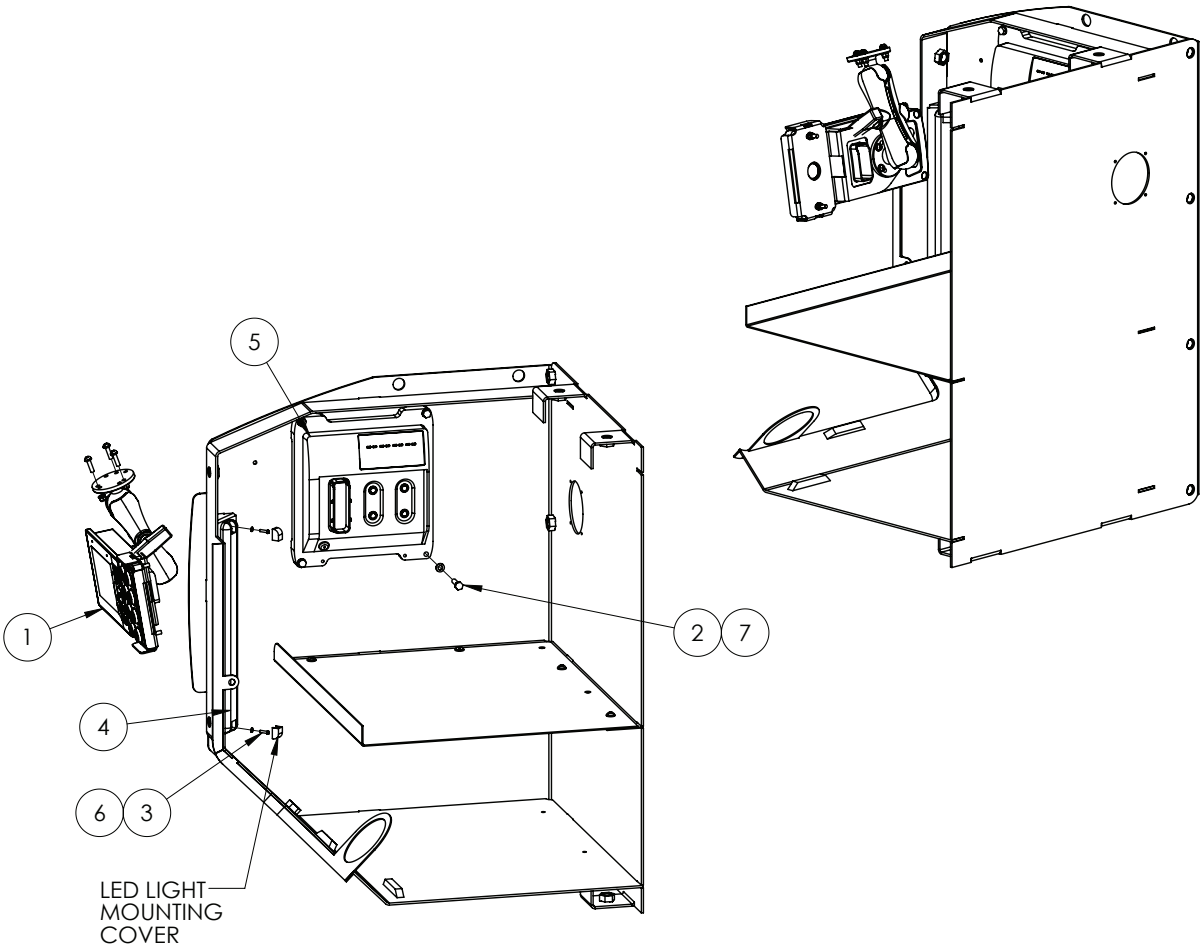

ITEM NO.	PART NUMBER	DESCRIPTION	QTY.
1	*	ASSEMBLY DRAWING ONLY, SCREEN, TOOLBOX, G6, MY20	1
2	GA5004073	BOLT M6 X 25 GR8.8 ZP	4
3	GA5003083	BOLT PAN HEAD M3 X 12	2
4	GA4950005	LIGHT, LED STRIP LIGHT, ASSEMBLY, G6, TOOLBOX	1
5	GA3000311	PLC, G6 MACHINE CONTROLLER MY20, CR711S, IFM	1
6	GA5011351	WASHER 3mm FLAT SS	2
7	GA5004437	WASHER 6mm FLAT SS	4

* Assembly On Following Page

Continue Over Page

Tool Box Display Screen Assembly (Second Design)

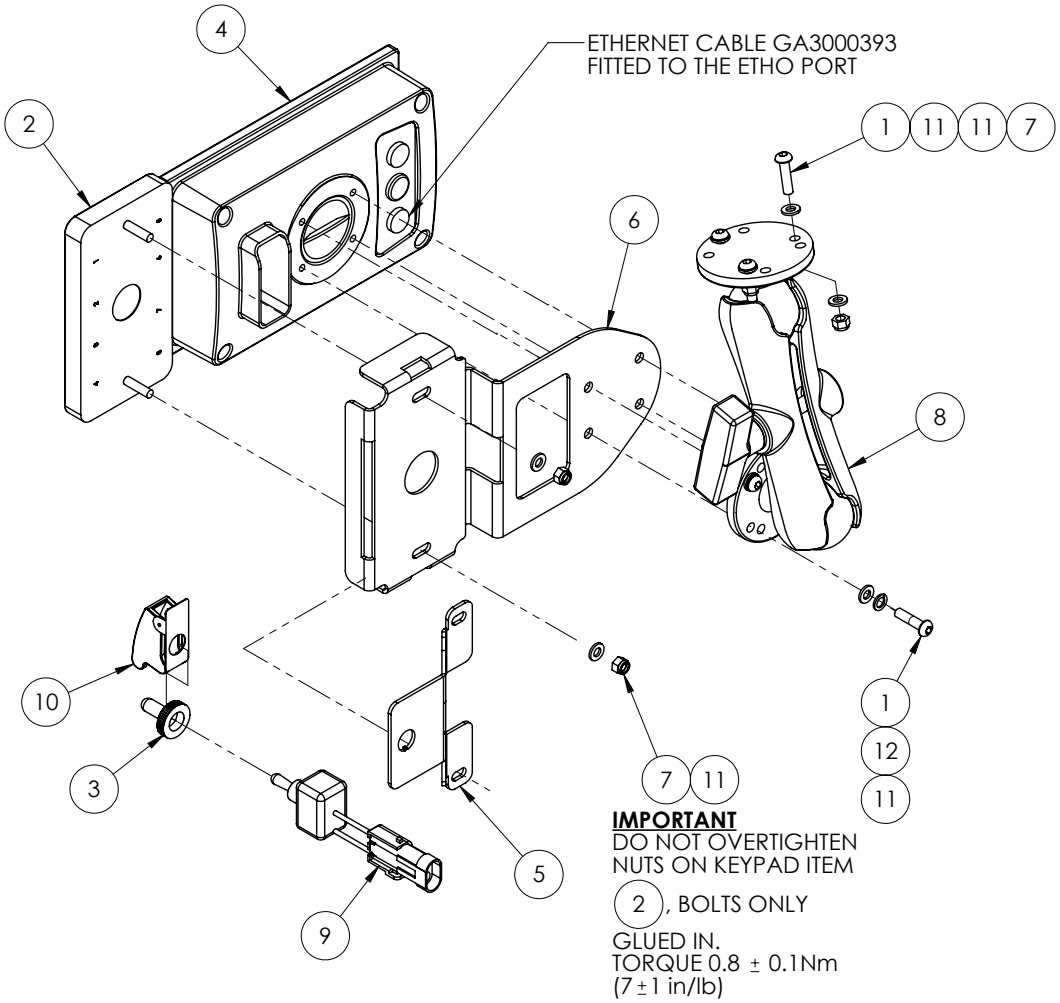

ITEM NO.	PART NUMBER	DESCRIPTION	QTY.
1	GA0500004	BHCS M5 X 20 SS A2-70	7
2	GA4950010	CAN KEYPAD ASSEMBLY SUIT MY20 G6 POD	1
3	GA5012175	COVER, TOGGLE SWITCH, WATERPROOF, NARVA, SUITS GA5016749.	1
4	GA3000289	DISPLAY SCREEN, 5”, NON TOUCH, IFM CR1150, WAS CR1058, G6	1
5	GA4525101	MOUNTING PLATE SUIT CAN KEYPAD, G6 MY20 SIDE POD HAWKEYE FILL SWITCH	1
6	GA4525100	MOUNTING PLATE SUIT CAN KEYPAD, G6 MY20 SIDE POD	1
7	GA5003974	NUT M5 NYLOC ZP	5
8	GA5020825	RAM MOUNT, UNIVERSAL, ADJUSTABLE, C SIZE 1.5” BALL, 7.35”, WITH ROUND MOUNTS, RAM-101U	1
9	GA5060064	SWITCH, TOGGLE, ON / OFF, PRE ASSEMBLED WITH 2 PIN WEATHER PACK CONNECTOR	1
10	GA5016753	TOGGLE SWITCH COVER, MISSILE, NARVA	1
11	GA5003983	WASHER M5 FLAT SS	12
12	GA5003629	WASHER 5MM SPRING SS	4

Tool Box - Door - Strut & Pinchweld

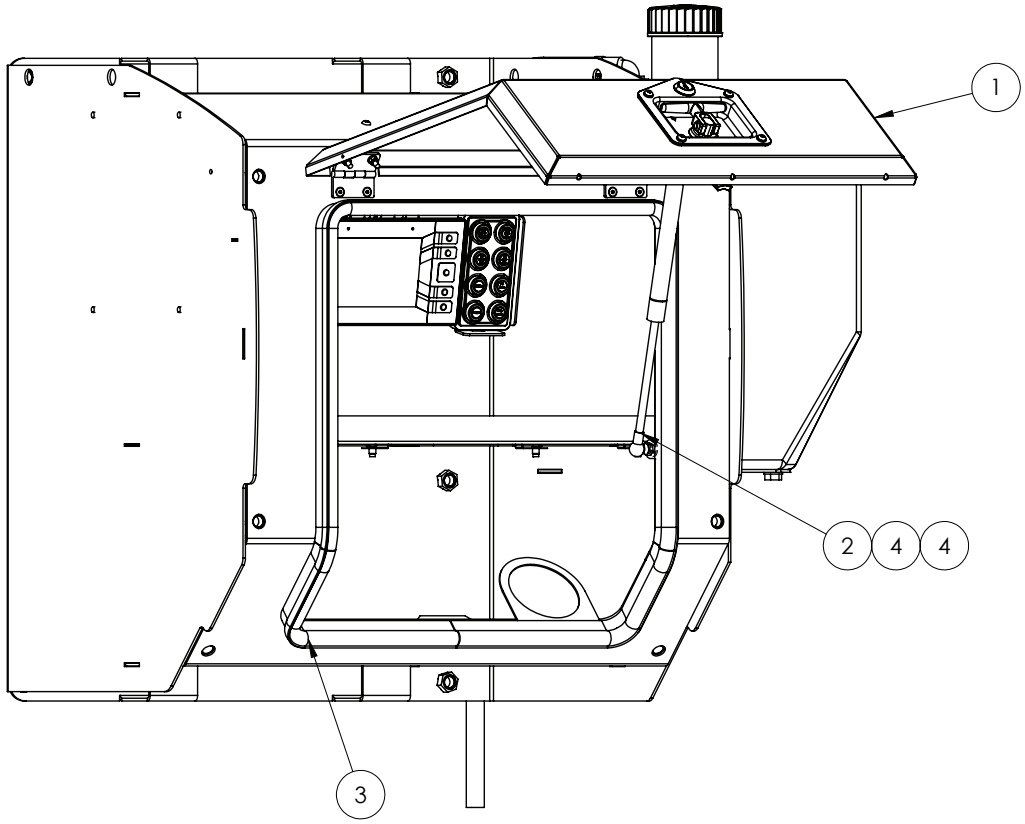

ITEM NO.	PART NUMBER	DESCRIPTION	QTY.
1	*	ASSEMBLY DRAWING ONLY, DOOR, TOOLBOX, G6, MY20	1
2	GA5078511	GAS STRUT, 6/18 DIAMETER, 325 EXTENDED LENGTH, 123mm STROKE, BALL ENDS 10mm, 250N	1
3	GA5072700	PINCHWELD, TOP BLISTER, 16.3mm X 30mm CUT 1.75M LONG	1
4	GA5003643	WASHER 8mm FLAT SS HD	4

* Assembly On Following Page

Continue Over Page

Door Assembly

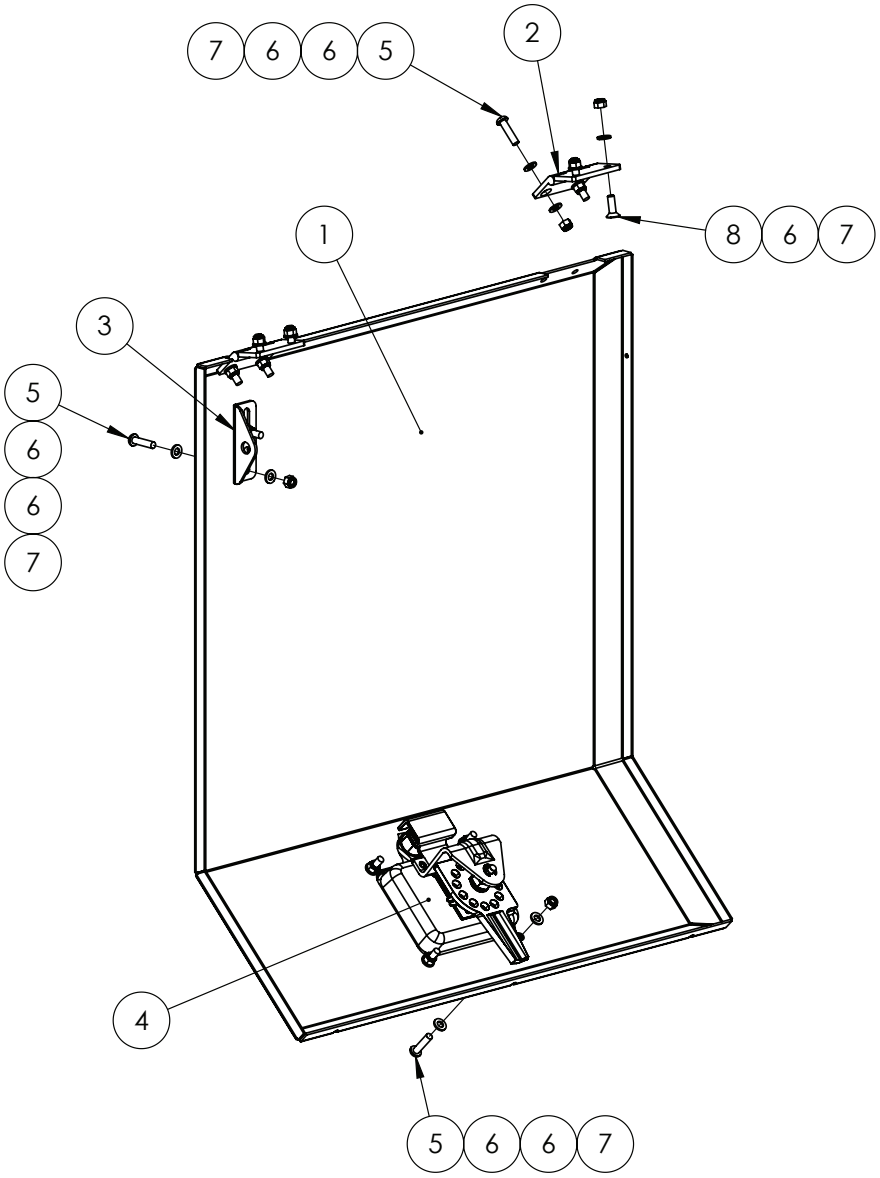

ITEM NO.	PART NUMBER	DESCRIPTION	QTY.
-	GA5078511	GAS STRUT, 6/15 DIAMETER, 325 EXTENDED LENGTH, 120MM STROKE, BALL ENDS, 150N	1
1	GA4405870	DOOR, TOOL BOX	1
2	GA5020415	HINGE CABIN SS 52 X 52 X 3 MM	2
3	GA4405885	PLATE, GAS STRUT MOUNT, TOOL BOX	1
4	GA5078512	LATCH, LOCK, T BAR, SUIT TOOL BOX	1
5	GA0500004	BHCS M5 X 20 SS A2-70	10
6	GA5003983	WASHER 5MM FLAT SS	24
7	GA5003974	NUT M5 NYLOC ZP	14
8	GA5051230	CSCS M5 X 16 SS A2-70	4

Tow Bar

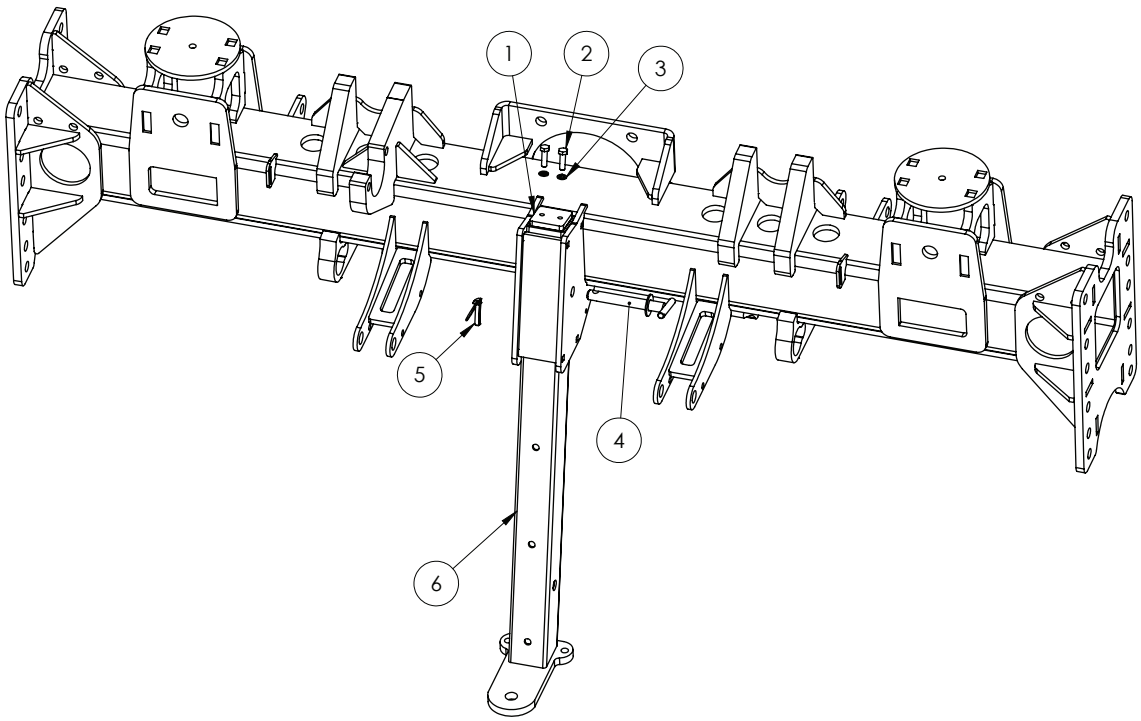

ITEM NO.	PART NUMBER	DESCRIPTION	QTY.
-	GA5001491	CHAIN 2MM X 20 SS, 20 LINKS	1
-	GA5002077	KEY RING, 25MM, SS	4
1	GA4504175	PLATE, TOP KEEPER TOW BAR SP 2011	1
2	GA5006111	BOLT M10 X 35 GR8.8 ZP	1
3	GA5000137	WASHER 10MM SPRING SS	1
4	GA4659185	PIN ASSY TOW BAR SP 2011	1
5	GA5010905	LINCH PIN, 7/16” OD X 45 LONG	1
6	GA4659180	TOWBAR, CROP CRUISER G6, MY11 ON	1

Air Tank

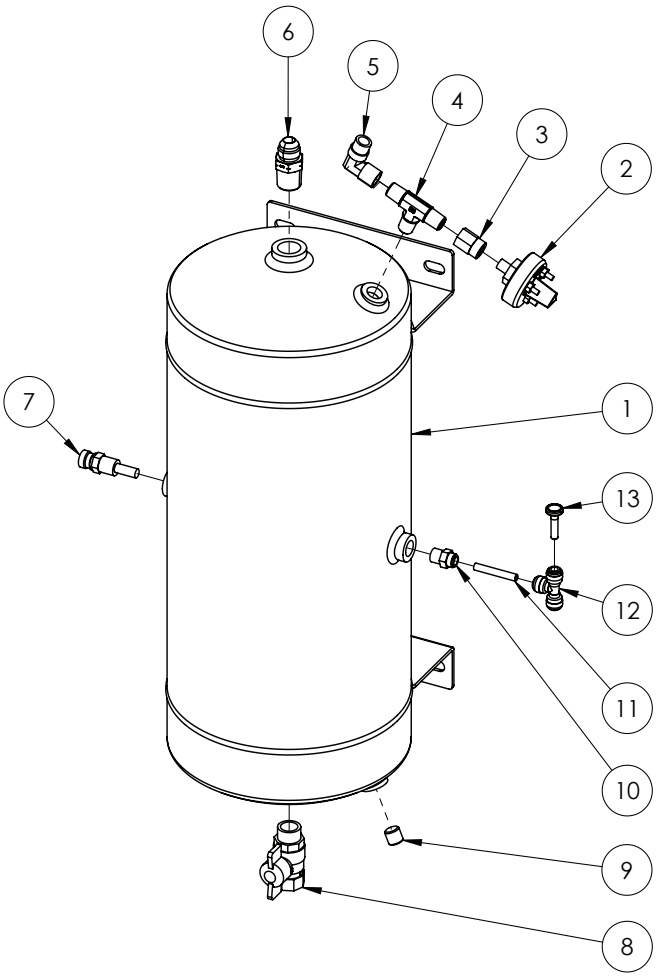

ITEM NO.	PART NUMBER	DESCRIPTION	QTY.
1	GA5071940	TANK, AIR, 14.75L, PROTEX AT3	1
2	GA5011059	PRESSURE SWITCH, LOW AIR, 55 PSI ACTUATION, SPDT, 1/8"	1
3	GA5069925	1/4" - 1/8" BSPT FEMALE REDUCING SOCKET	1
4	GA3500269	HYDRAULIC ADAPTOR, TEE, 1/4" BSPT MALE X 1/4" BSPT MALE X 1/4" BSPT MALE, S50-040404	1
5	GA5078519	"AIR FITTING, ELBOW, 3/8"" TUBE, 1/4"" NPT FEMALE, PUSH IN, BRASS, ALKON AQ70-DOT-6X4"	1
6	GA3500760	"HYDRAULIC ADAPTER, NIPPLE, 1/2"" NPT MALE X 3/4"" JIC MALE, S7N-0812"	1
7	GA5017369	PRESSURE RELIEF VALVE	1
8	GA5020615	VALVE, BALL, 12MM, 1/2" MALE, FEMALE BUTTERFLY, BRASS	1
9	GA5070300	PLUG 1/4" FLUSH FIT	1
10	GA5045140	PNEUMATIC FITTING, NIPPLE, 1/4 BSPT MALE X 6MM PUSH TYPE, BRASS	1
11	GA5004383	6MM HYDROSTATIC HOSE BLACK 40MM LONG	0.04M
12	GA5016245	TEE EQUAL PUSH IN 6MM	1
13	GA5004405	PLUG PUSH IN 6MM	1

Autogrease Mounting

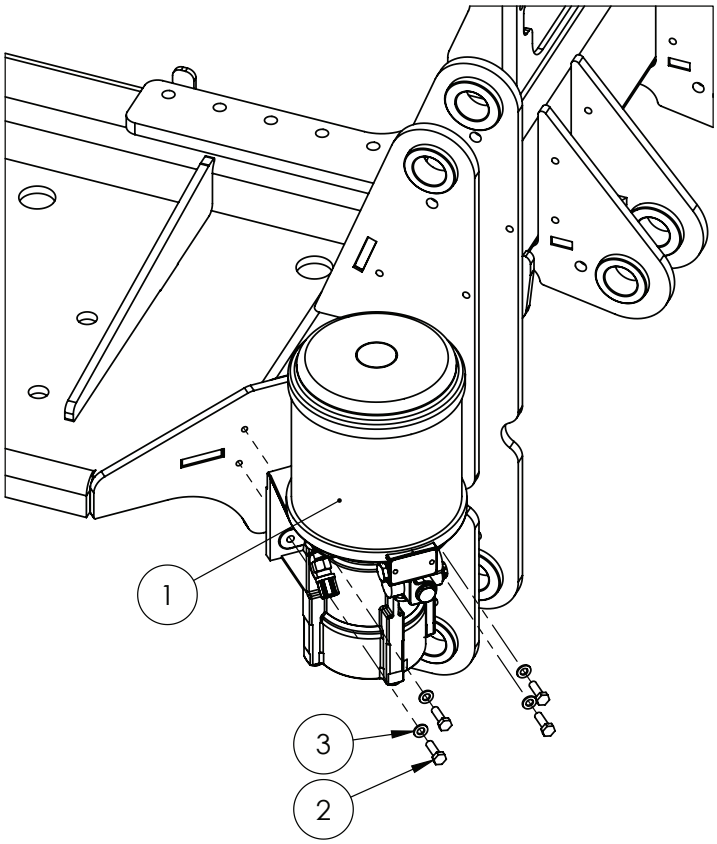

ITEM NO.	PART NUMBER	DESCRIPTION	QTY.
1	*	GROENEVELD AUTO GREASE RESERVOIR ALEMLUBE AUTO GREASE RESERVOIR	1
2	GA5004711	BOLT M8 X 25 GR8.8 ZP	4
3	GA5003643	WASHER 8MM FLAT SS HD	4

* NOTE: Please consult autogreaser supplier for spare parts specific to those systems.

Fuse Cover (From S/N 104015)

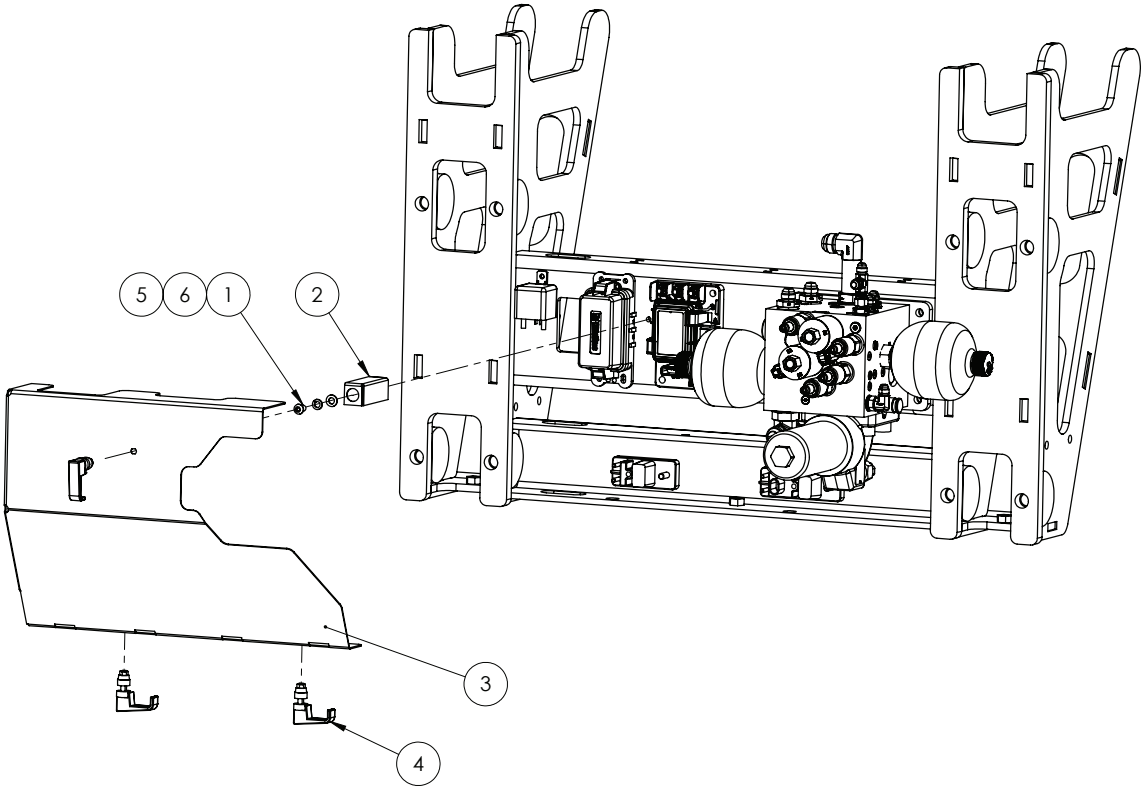

ITEM NO.	PART NUMBER	DESCRIPTION	QTY.
1	GA5004696	BHCS M8 X 16 SS A2-70	1
2	GA5078895	BRACKET, FUSE COVER, G6, MY23	1
3	GA5078894	FUSE COVER, STAINLESS GUARD, G6, MY23	1
4	GA5066600	RAWL ACTION LATCH, QUICK ACCESS FASTENER, SWELL, BLACK	3
5	GA5003651	WASHER M8 FLAT SS	1
6	GA5004919	WASHER 8MM SPRING SS	1

Pump and Suction Filter Mounting - Diaphragm Pump

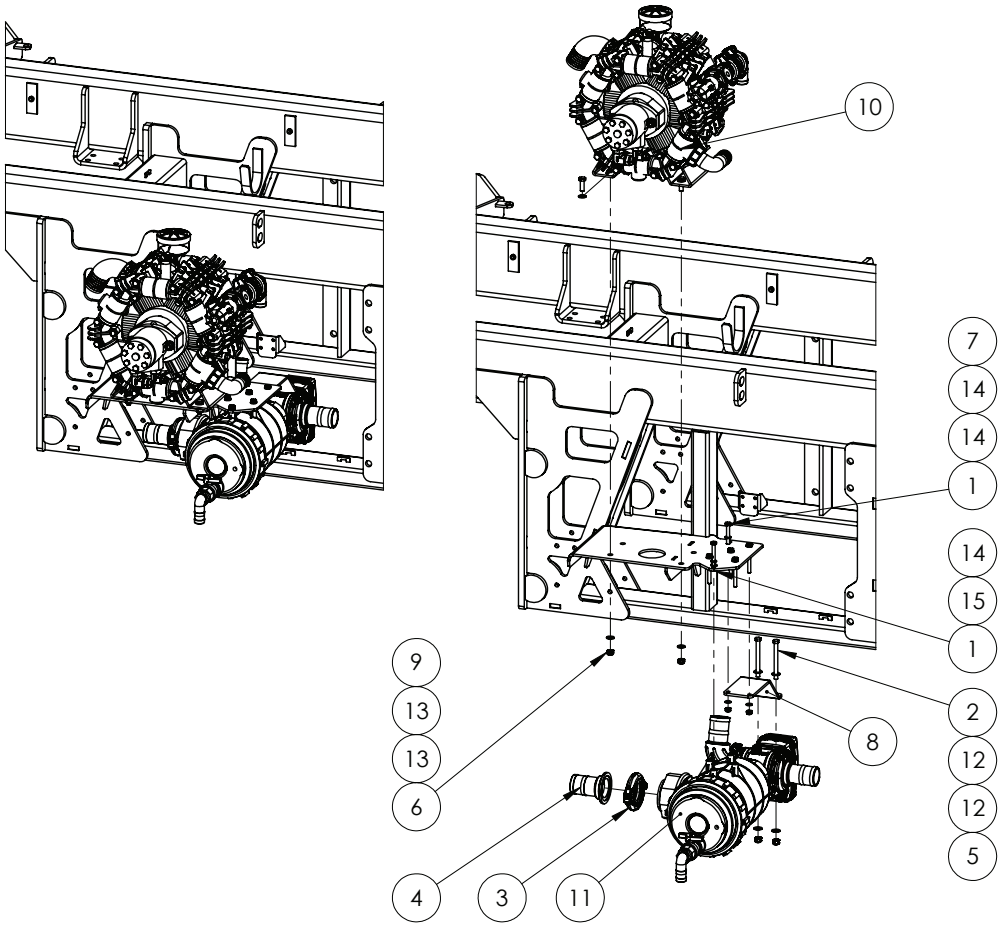

BUILD OPTIONS:
70011 - 260L/MIN DIAPHRAGM PUMP - HYDRAULIC DRIVE

ITEM NO.	PART NUMBER	DESCRIPTION	QTY.
1	GA5052600	BOLT M8 X 75 SS A2-70	6
2	GA0500039	BOLT, 3/8” X 4” UNC ZP, GR8	2
3	GA2000115	FLANGE CLAMP, AND GASKET, 2”, SERIES 220, HYPRO	1
4	GA5077859	HOSE BARB, STRAIGHT, 2 FLANGE X 2 HOSE, BANJO	1
5	GA5048345	NUT 3/8”, NYLOC, ZP, UNC	2
6	GA5000141	NUT M10 NYLOC ZP	4
7	GA5004917	NUT M8 NYLOC ZP	2
8	GA4406190	PLATE, SUCTION FILTER VALVE MOUNT, G6 MY20	1
9	GA5065455	SET SCREW M10 X 30 GR8.8 ZP	4
10	GA4949430	SPRAY PUMP ASSEMBLY, UDOR ZETA 260, G6, MY20	1
11	GA4949425	SPRAY PUMP SUCTION FILTER ASSEMBLY, G6, MY20	1
12	GA5002563	WASHER 3/8” X 7/8” FLAT SS	4
13	GA5000117	WASHER M10 FLAT SS HD	8
14	GA5003643	WASHER M8 FLAT SS HD	8
15	GA5004919	WASHER M8 SPRING SS	4

Pump and Suction Filter Mounting - Centrifugal Pump

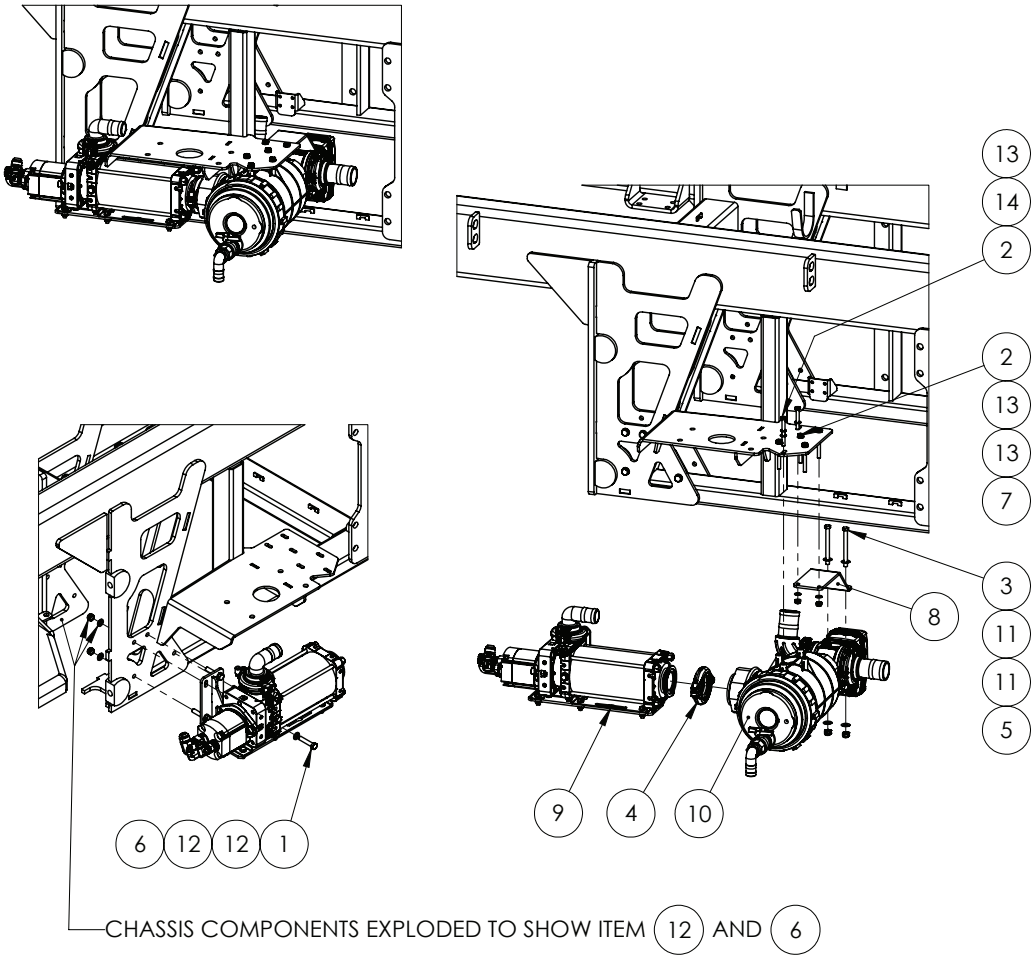

BUILD OPTIONS:
70012 - CENTRIFUGAL PUMP

ITEM NO.	PART NUMBER	DESCRIPTION	QTY.
1	GA5006057	BOLT M10 X 50 GR8.8 ZP	4
2	GA5052600	BOLT M8 X 75 SS A2-70	6
3	GA0500039	BOLT, 3/8” X 4” UNC ZP, GR8	2
4	GA2000115	FLANGE CLAMP, AND GASKET, 2”, SERIES 220, HYPRO	1
5	GA5048345	NUT 3/8”, NYLOC, ZP, UNC	2
6	GA5000141	NUT M10 NYLOC ZP	4
7	GA5004917	NUT M8 NYLOC ZP	2
8	GA4406190	PLATE, SUCTION FILTER VALVE MOUNT, G6 MY20	1
9	GA4949420	PUMP MOUNT BRACKET, ARAG MSP400, G6, MY20	1
10	GA4949425	SPRAY PUMP SUCTION FILTER ASSEMBLY, G6, MY20	1
11	GA5002563	WASHER 3/8” X 7/8” FLAT SS	4
12	GA5000117	WASHER M10 FLAT SS HD	8
13	GA5003643	WASHER M8 FLAT SS HD	8
14	GA5004919	WASHER M8 SPRING SS	4

Chapter 2

PUMPS

Spray Pump - Zeta 260

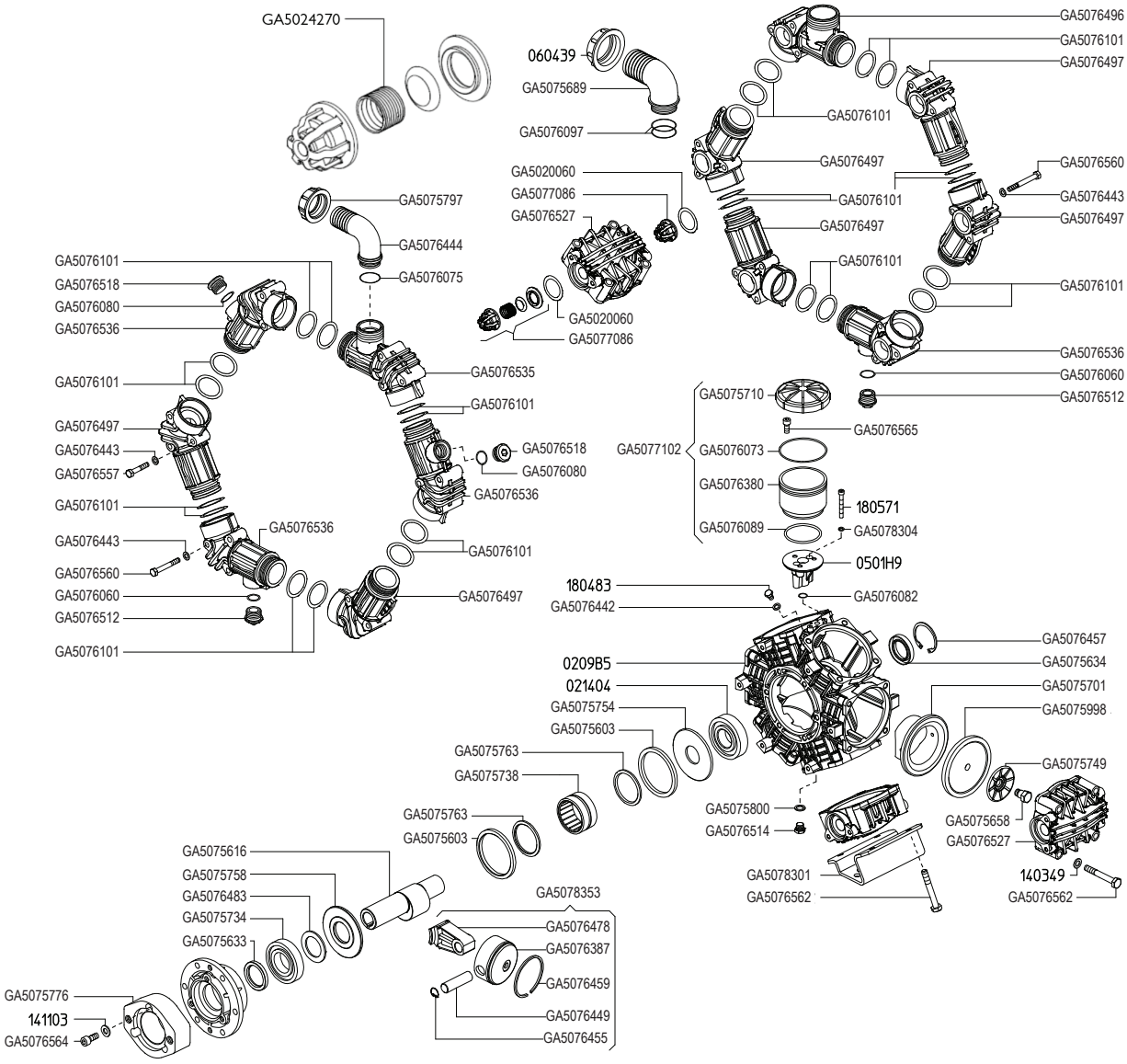

PUMP ASSEMBLY

PART NUMBER	DESCRIPTION	QTY.
GA5054500	PUMP ZETA 260 MI-1	1

PUMP SERVICE PARTS

PART NUMBER	DESCRIPTION
GA5077793	PUMP DIAPHRAGM KIT SUIT ZETA 260 AND RO250 UDOR PUMPS
GA5077792	PUMP REBUILD KIT, INCLUDES DIAPHRAGMS, SEALS & VALVES, SUITS BOTH ZETA 260 AND RO250 IN PTO AND HYD DRIVE
GA5023115	SEAL KIT, 60CC & 80CC HYDRAULIC MOTOR, GA5009525 AND GA5047515

Spray Pump - Zeta 260 - Hydraulic Drive

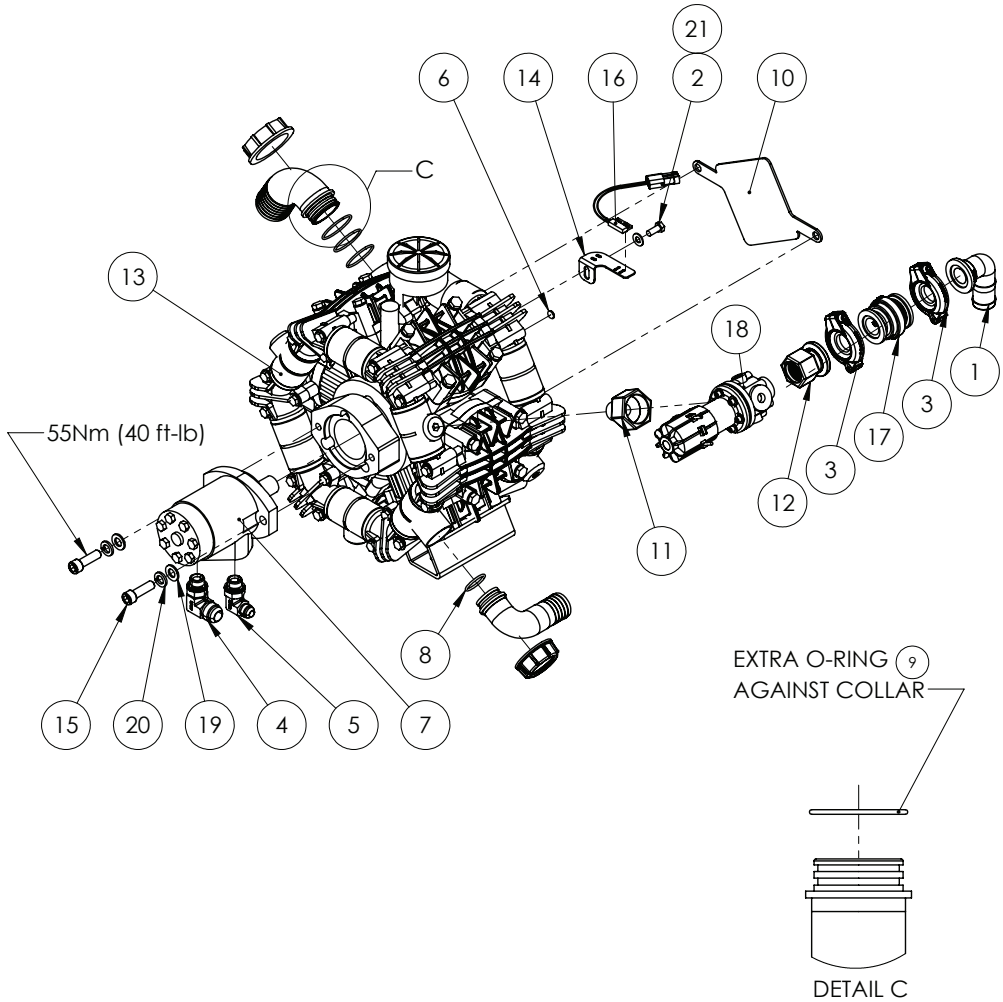

ITEM NO.	PART NUMBER	DESCRIPTION	QTY.
1	GA5077807	1" FLANGE X 1 1/4" BARB, ELBOW, 90 DEGREE, M100125BRB90	1
2	GA5052595	BOLT M8 X 20 SS A270	1
3	GA2000113	FLANGE CLAMP, AND GASKET, 1", SERIES 100, HYPRO	2
4	GA3500723	HYDRAULIC ADAPTOR, ELBOW, 90 DEGREE, 1 1/16" JIC MALE X 1/2" BSPP MALE O-RING, S76-0817	1
5	GA3500722	HYDRAULIC ADAPTOR, ELBOW, 90 DEGREE, 3/4" JIC MALE X 1/2" BSPP MALE O-RING, S76-0812	1
6	GA5016169	MAGNET, HIGH STRENGTH, 12mm DIAMETER X 1.5mm THICK	1
7	GA5047515	MOTOR, HYDRAULIC, 80CC/REV, 25.4mm SHAFT, SUIT SPRAY PUMP DRIVE	1
8	GA5076075	O RING, 32.00 X 3.0, 110142	1
9	GA5048385	O RING, 42.5 X 2.62, BS131, SUIT 2" HOSE BARB	1
10	PUMPCOVER250	PLATE, REAR PUMP SHAFT COVER, RO250, ZETA 260 AND 300	1

Spray Pump - Zeta 260 - Hydraulic Drive

ITEM NO.	PART NUMBER	DESCRIPTION	QTY.
11	GA4583645	PLUMBING FITTING, 3/4" MALE TO 1 1/4" FEMALE, REDUCING BUSH	1
12	GA5077817	PLUMBING COUPLING, 1" FLANGE X 1" FEMALETHREAD, BANJO	1
13	GA5054500	PUMP ZETA 260 MI-1	1
14	GA4525010	RPM SENSOR MOUNT BRACKET, SUIT UDOR MI PUMP	1
15	GA5000321	SHCS M12 X 40 GR12.9 ZP	2
16	GA5076331	SENSOR, SPRAY PUMP RPM SUIT 440 / 450, G6 MY20, RAVEN, 1170171293	1
17	GA5077889	VALVE, CHECK, 1" MANIFOLD, FLANGE, BANJO, MCV100	1
18	GA5075640	VALVE, PRESSURE RELIEF, 15 BAR, 1" MALE THREAD INLET X 1 1/4" MALE THREAD OUTLET, POLMAC	1
19	GA5000577	WASHER 12mm FLAT SS HD	2
20	GA5000575	WASHER 12mm SPRING SS	2
21	GA5003643	WASHER 8mm FLAT SS HD	1

Spray Pump - ARAG MSP400

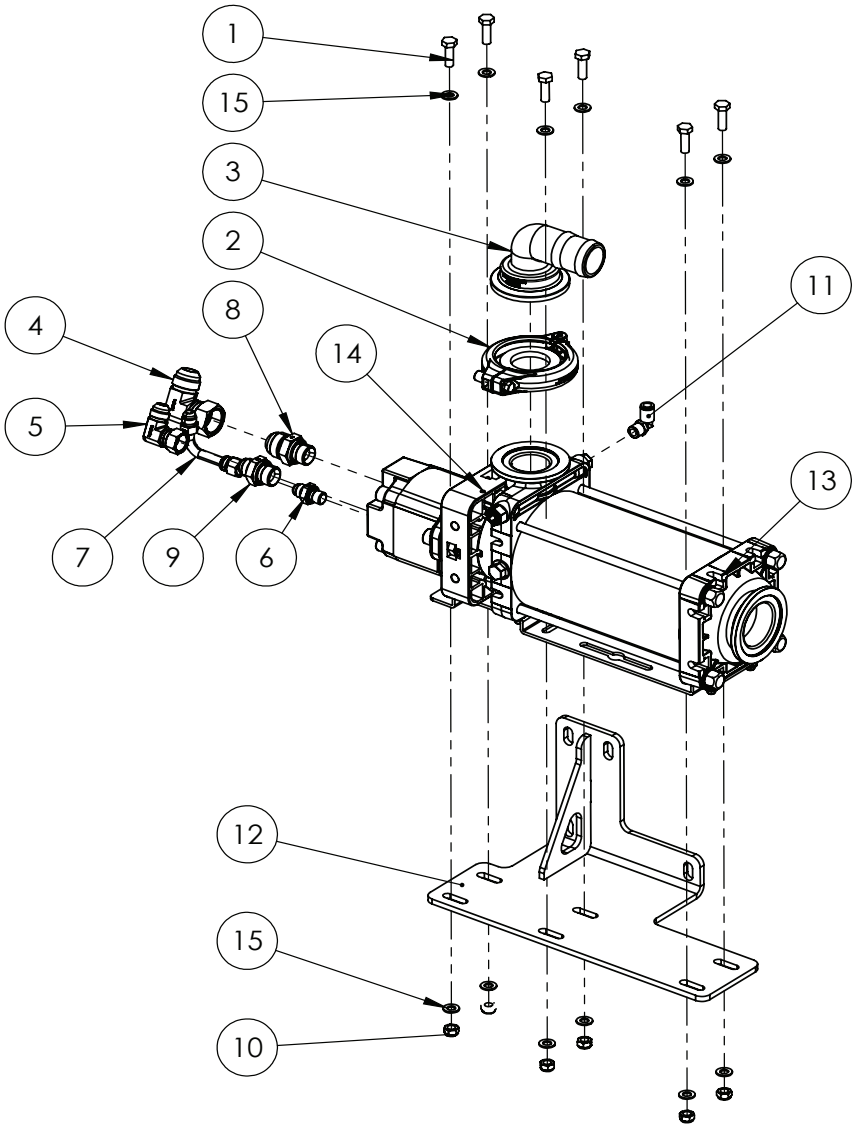

ITEM NO.	PART NUMBER	DESCRIPTION	QTY.
1	GA5004711	BOLT M8 X 25 GR8.8 ZP	6
2	GA2000114	FLANGE CLAMP, AND GASKET, 1.5", SERIES 200, HYPRO	1
3	GA5077834	HOSE BARB, ELBOW, 90 DEGREE, 2 FLANGE X 1 1/2 HOSE, BANJO, M200150BRB90	1
4	GA3500823	HYDRAULIC ADAPTOR ELBOW, 1 1/16" JIC MALE X 1 1/16" JIC FEMALE SWIVEL, S15-1717	1
5	GA3500822	HYDRAULIC ADAPTOR ELBOW, 3/4" JIC MALE X 3/4" JIC FEMALE SWIVEL, S15-1212	1
6	GA3500544	HYDRAULIC ADAPTER, NIPPLE, 1/4" BSPP O-RING MALE X 9/16" JIC MALE, S74-0409	1
7	GA3501299	HYDRAULIC ADAPTOR, TUBE BEND, 90 DEG, 9/16" JIC MALE TO 9/16" JIC FEMALE SWIVEL, S103-0909	1

Continue Over Page

ITEM NO.	PART NUMBER	DESCRIPTION	QTY.
8	GA3500720	HYDRAULIC ADAPTER, NIPPLE, 1/2” BSPP O-RING MALE X 1 1/16” JIC MALE, S74-0817	1
9	GA3500303	HYDRAULIC ADAPTER, NIPPLE, 1/2” BSPP O-RING MALE X 3/4” JIC MALE, S74-0812	1
10	GA5004917	NUT M8 NYLOC ZP	6
11	GA5052690	PNEUMATIC FITTING, ELBOW, 90 DEGREE, 1/4 BSP MALE X 8MM PUSH TYPE, METAL	1
12	GA4602440	PUMP MOUNT BRACKET, ARAG MSP400, G6, MY20	1
13	GA2000123	PUMP, MULTISTAGE CENTRIFUGAL, HYDRAULIC DRIVE, 2” FP FLANGE INLET, 2” SP FLANGE OUTLET, ARAG MSP400	1
14	GA3000186	SENSOR, PUMP RPM, ARAG MP400 / MSP400	1
15	GA5003643	WASHER M8 FLAT SS HD	12

Spray Pump - ARAG MSP400 Assembly

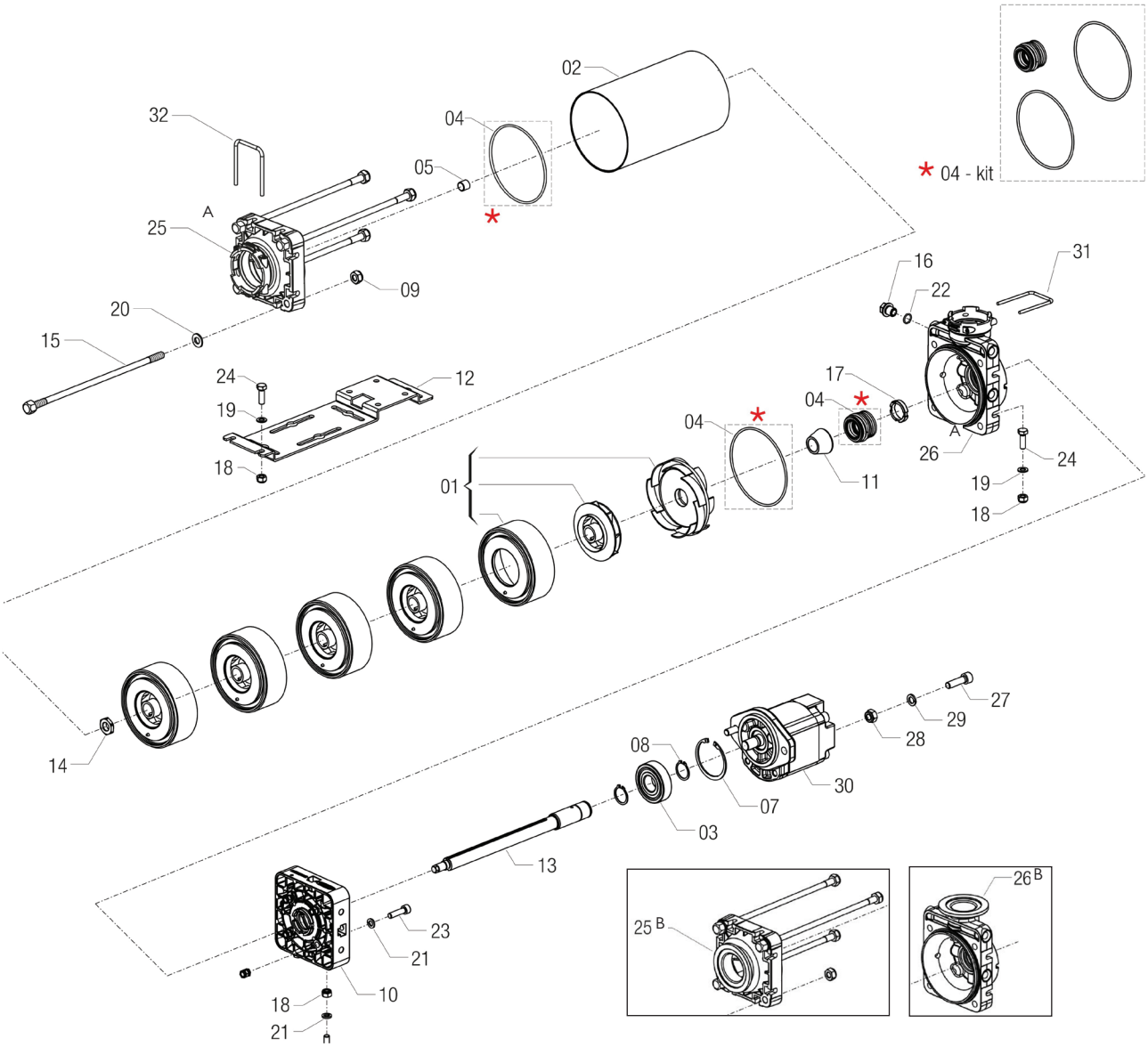

ITEM NO.	PART NUMBER	DESCRIPTION	QTY.
-	GA3000186	SENSOR, PUMP RPM, ARAG MP400	-
-	GA2000129	PUMP, MULTISTAGE CENTRIFUGAL, T7 INLET T6 OUTLET, ARAG MP400, PUMP ONLY, NO MOTOR OR RPM SENSOR	-
1	GA5073640	IMPELLER KIT MSP400 PP PUMP	-
2	GA2000182	PUMP TUBE COVER	-
3	GA5078740	RADIAL BALL BEARING, 6305-2RS, SUIT, ARAG, MSP400, 970000.061	-
4	GA5073620	TIGHTENING KIT	-
5	GA2000183	SPACER	-
7	GA2000184	CIRCLIP INNER	-
8	GA2000185	CIRCLIP OUTER	-

Continued over page

Spray Pump - ARAG MSP400 Assembly

ITEM NO.	PART NUMBER	DESCRIPTION	QTY.
9	GA5078744	SELF-LOCKING NUT M10 INOX UNI7474, SUIT, ARAG, MSP400, B12261	-
10	GA2000186	Bearing support	-
11	GA5073625	INTERNAL SPACER MSP400 PUMP	-
12	GA5078745	BRACKET, FIXING, SUIT, ARAG, MSP400, 970050.05	-
13	GA2000187	SHAFT	-
14	GA5078747	BOLT, IMPELLER, TIGHTENING, SUIT, ARAG, MSP400, 97000.082	-
15	GA5078748	FIXING SCREW, 10X268MM S/S, SUIT, ARAG, MSP400 PUMP, 970050.091	-
16	GA5078749	PLUG, 1/4"M, SUIT, ARAG, MSP400 PUMP, 970000.084	-
17	GA5073630	SEAL SPACER	-
18	GA5078750	NUT, SELF LOCKING, M8, INOX UNI7474, SUIT, ARAG, MSP400 PUMP, B12251	-
19	GA5078751	WASHER, FLAT, 8.4X15X1.5 INOX, SUIT, ARAG, MSP400 PUMP, B202H0	-
20	GA5078752	WASHER, FLAT, D10.5X21X2, INOX, SUIT, ARAG, MSP400, B202J0	-
21	GA5078753	WASHER, GROVER, D 8.2 INOX UNI1751, SUIT, ARAG, MSP400 PUMP, B222H0	-
22	GA2000188	O-RING, 1.78 X 12.42 MM, VITON	-
23	GA5078755	SCREW, TCEI, 8X30, INOX UNI5931, SUIT, ARAG, MSP400 PUMP, VIC25L	-
24	GA5078756	SCREW, TE, 8X25 INOX	-
25A	GA2000189	FLANGE, INLET, T7F	-
25B	GA2000191	FLANGE, INLET, 220 2" FP	-
26A	GA2000190	FLANGE, OULET, T6	-
26B	GA2000192	FLANGE, OUTLET, 220 2" SP	-
27	GA5078757	SCREW, TCEI, 10X35, INOX UNI5931, SUIT, ARAG, MSP400 PUMP, VIC26M	-
28	GA5078744	SELF-LOCKING NUT M10 INOX UNI7474, SUIT, ARAG, MSP400, B12261	-
29	GA5078758	WASHER, GROVER, 10.5X17.5X2.2 INOX, SUIT, ARAG, MSP400 PUMP, B222J0	-
30	GA5073645	MOTOR, HYDRAULIC, SUIT, MP400/MSP400, ARAG, 9700000.102	-
	GA3501267	SEAL, OIL, 18 X 30 X 7MM, MSP400 MOTOR SHAFT, GA5073645, "CASAPPA BRAND ONLY"	-
31	GA2000193	FORK D.4, DIST.47	-
32	GA2000194	FORK D.5, DIST.59	-

Fill Pump Plumbing Assembly - Up To S/N 203992

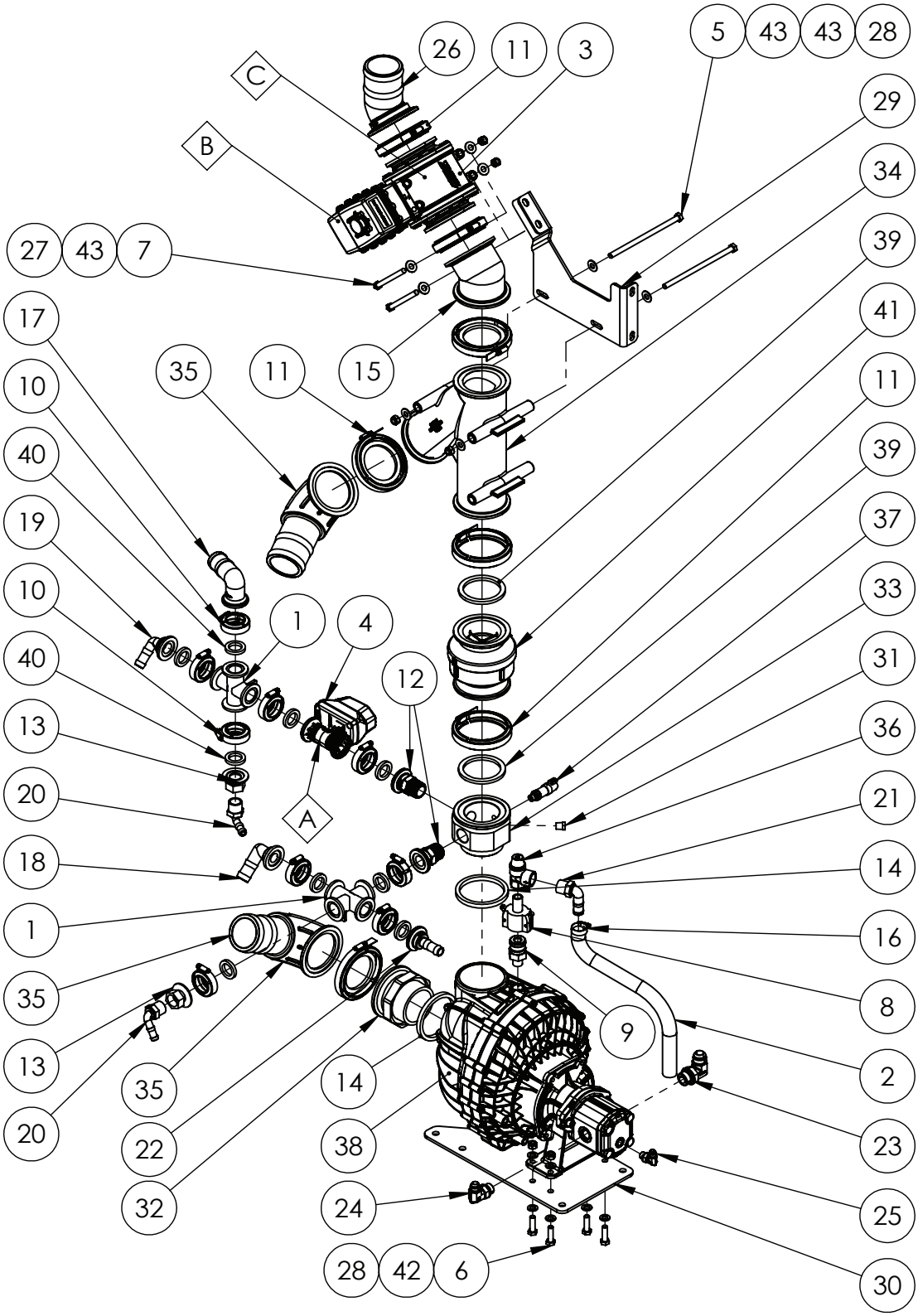

Continued over page

Fill Pump Plumbing Assembly

ITEM NO.	PART NUMBER	DESCRIPTION	QTY.
A	GA2000154	BALL VALVE, VALVE ONLY, SUIT GA2000141, KZ VALVE	-
B	GA2000161	BALL VALVE, ACTUATOR ONLY, SUIT GA2000144, KZ VALVE	-
C	GA2000157	BALL VALVE, VALVE ONLY, SUIT GA2000144, KZ VALVE	-
1	GA5077816	1 FLANGED CROSS, M100CR	2
2	GA2000323	20MM PRESSUE HOSE CUT 700, GA2000216	.7
3	GA2000144	BALL VALVE, MOTORISED, 2 WAY, 3" FLANGED CONNECTIONS, 3 SECOND, PWM, KZ VALVE	1
4	GA2000141	BALL VALVE, MOTORIZED, 2 WAY, 1" FLANGE CONNECTION, 0.5 SECOND, KZ VALVE, TX2	1
5	GA0500091	BOLT M10 X 190 GR8.8 ZP	2
6	GA5006111	BOLT M10 X 35 GR8.8 ZP	4
7	GA0500039	BOLT, 3/8" X 4" UNC ZP, GR8	2
8	GA5077128	CAM LEVER, 3/4 FEMALE COUPLING X 1/2 MALE THREAD, BANJO, 75B1/2	1
9	GA5075782	CAM LEVER, 3/4 MALE COUPLING X 1/2 MALE THREAD, BANJO, 050F	1
10	GA5077664	CLAMP, WORM SCREW, USE WITH 1 STANDARD FLANGE PORT, BANJO, FC100	9
11	FC300	CLAMP, 3" FLANGE MANIFOLD, BANJO	7
12	GA5077820	COUPLING, FLANGED, 1 FLANGE X 1 MALE THREAD, BANJO, M100MPT	2
13	GA5077804	COUPLING, 1 FLANGE X 3/4 FEMALE THREAD, BANJO, M100075FPT	2
14	GA5078838	EPDM SEAL, 3" NPT THREAD TAPER, PENTAIR FILL PUMP	2
15	GA2000070	PLUMBING FITTING, ELBOW, 45, 3" FLANGE BOTH ENDS, M300CPG45, BANJO	1
16	GA5000999	HOSE CLAMP, 3/4" SS (16-27/12W)	1
17	GA2000138	HOSE BARB, ELBOW, 90 DEGREE, 1" FLANGE, X 1 1/2" HOSE, BANJO M100150BRB90	1
18	GA5077812	HOSE BARB, ELBOW, 90 DEGREE, 1 FLANGE X 1 HOSE, BANJO, M100BRB90	1
19	GA5077803	HOSE BARB, ELBOW, 90 DEGREE, 1 FLANGE X 3/4 HOSE, BANJO, M100075BRB90	1
20	GA5077710	HOSE BARB, ELBOW, 90 DEGREE, 3/4 MALE THREAD X 1/2 HOSE, BANJO, HB075/050-90	2
21	GA5077717	HOSE BARB, ELBOW, 90 DEGREE, 3/4 MALE THREAD X 3/4 HOSE, BANJO, HB075-90	1
22	GA5077802	HOSE BARB, STRAIGHT, 1" FLANGE X 3/4" HOSE, BANJO, M100075BRB	1
23	GA3500715	HYDRAULIC ADAPTOR, ELBOW, 1 1/16" UNO TO 1 1/16" JIC, 90 DEG, S91-1717	1
24	GA3500761	HYDRAULIC ADAPTOR, ELBOW, 7/8" UNO TO 3/4" JIC, 90 DEG, S91-1214	1

Continued over page

Fill Pump Plumbing Assembly

ITEM NO.	PART NUMBER	DESCRIPTION	QTY.
25	GA3500716	HYDRAULIC ADAPTOR, ELBOW, 90 DEGREE, 9/16” JIC MALE X 9/16” UN MALE O-RING, S91-0909	1
26	GA5077874	MANIFOLD HOSE BARB 3”, 45 DEGREE, M300BRB45	1
27	GA5048345	NUT 3/8 UNC NYLOC ZP	2
28	GA5000141	NUT M10 NYLOC ZP	6
29	GA4405665	PLATE, FILL PUMP ASSEMBLY UPPER MOUNT, G6 MY20	1
30	GA4408595	PLATE, FILL PUMP MOUNT, BOLT ON BRACKET, G6, MY20	1
31	GA5069335	PLUG, 1/4 BSPT MALE THREAD, BRASS	1
32	GA4583660	PLUMBING ADAPTOR, M300 FLANGE TO 3” NPT THREAD	1
33	GA4583595	PLUMBING ADAPTOR, M300 FLANGE TO 3” NPT THREAD WITH SEAL & SIDE PORTS	1
34	GA2000147	PLUMBING FITTING, 3” M300 STRAIGHT WITH 45 SIDE INLET Y, M300Y45, BANJO	1
35	GA2000148	PLUMBING FITTING, 3” FLANGE TO 3” BARB, SWEPT ELBOW, BANJO, M300BRBSWP90	2
36	GA2000131	PRESSURE RELIEF VALVE, SPIKE, 4 BAR, 1/2” IN, 3/4” OUT, BRASS, CALEFFI	1
37	GA3000316	PRESSURE SENSOR TRANSDUCER, 0-25 BAR, 0.5-4.5V, IFM	1
38	GA2000146	PUMP, FILL, 3”, HYDRAULICALLY DRIVEN, HYPRO	1
39	GA5076723	SEAL, EPDM, SUIT 3 FLANGE FITTING, BANJO, 300G	7
40	GA5077818	SEAL, 1”, 100 SERIES MANIFOLD GASKET, EPDM, BANJO, M100G	9
41	GA2000088	VALVE, CHECK, 3” MANIFOLD, FULL PORT, FLANGE, MCV300V, BANJO	1
42	GA5000117	WASHER M10 FLAT SS HD	8
43	GA5017623	WASHER 3/8 FLAT ZP HD	8

Fill Pump Plumbing Assembly - From S/N 203993

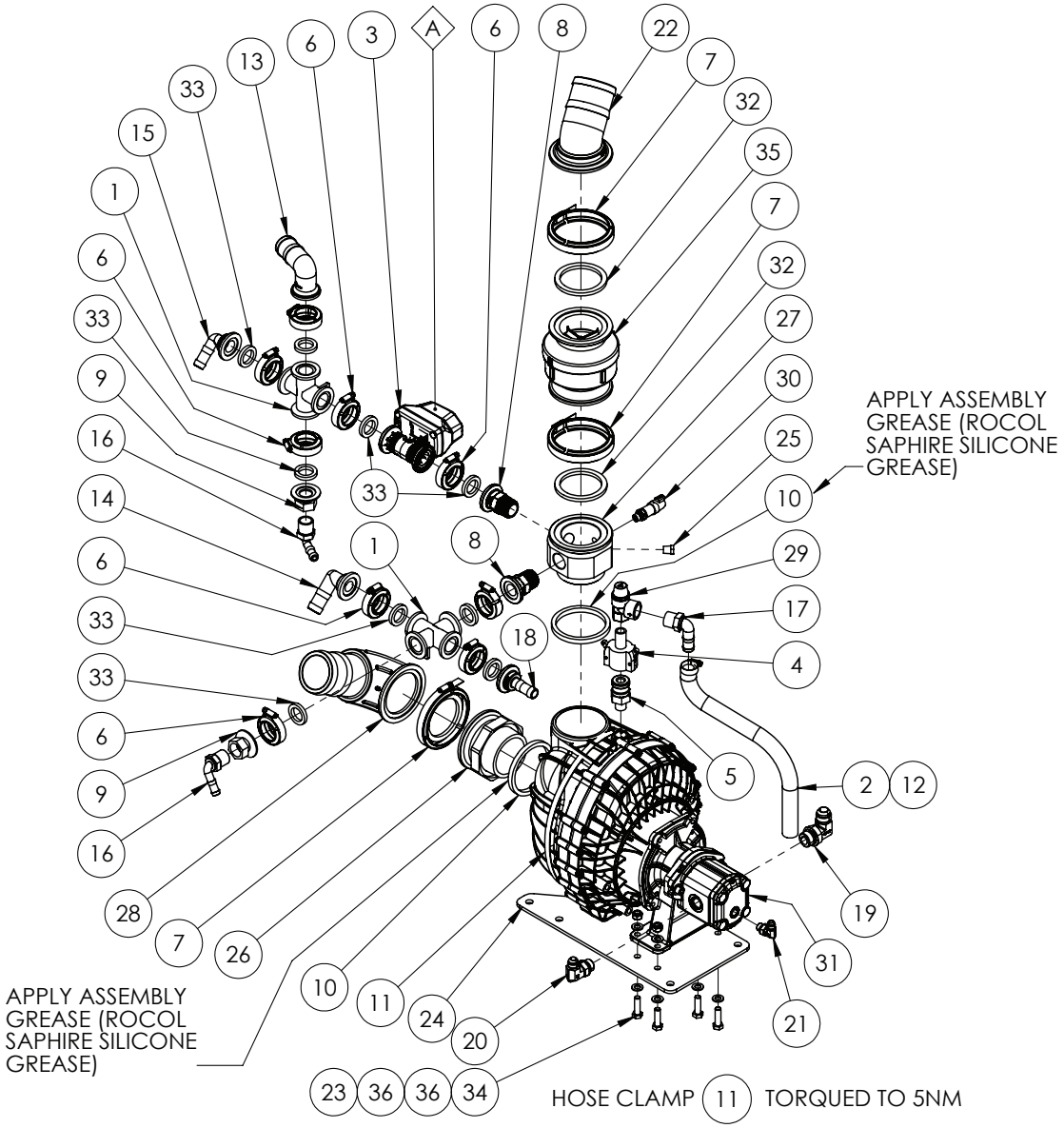

ITEM NO.	PART NUMBER	DESCRIPTION	QTY.
A	GA2000154	BALL VALVE, VALVE ONLY, SUIT GA2000141, KZ VALVE	-
1	GA5077816	1" FLANGED CROSS	2
2	GA2000323	20mm PRESSUE HOSE CUT 700, GA2000216	1
3	GA2000141	BALL VALVE, MOTORIZED, 2 WAY, 1" FLANGE CONNECTION, 0.5 SECOND, KZ VALVE, TX2	1
4	GA5077128	CAM LEVER, 3/4 FEMALE COUPLING X 1/2 MALE THREAD, BANJO, 75B1/2	1
5	GA5075782	CAM LEVER, 3/4 MALE COUPLING X 1/2 MALE THREAD, BANJO, 050F	1
6	GA5077664	CLAMP, WORM SCREW, 1", BANJO	9
7	FC300	CLAMP, 3" FLANGE MANIFOLD, BANJO	3

Continued over page

Fill Pump Plumbing Assembly - From S/N 203993

ITEM NO.	PART NUMBER	DESCRIPTION	QTY.
8	GA5077820	COUPLING, FLANGED, 1 FLANGE X 1 MALE THREAD, BANJO	2
9	GA5077804	COUPLING, 1" FLANGE X 3/4" FEMALE THREAD, BANJO	2
10	GA5078838	EPDM SEAL, 3" NPT THREAD TAPER, PENTAIR FILL PUMP	2
11	GA2000639	HOSE CLAMP, 267 - 318mm, 12.7mm WIDE, SS, 1000mm LONG	1
12	GA5000999	HOSE CLAMP, 3/4" SS (16-27/12W)	1
13	GA2000138	HOSE BARB, ELBOW, 90 DEGREE, 1" FLANGE, X 1 1/2" HOSE, BANGO M100150BRB90	1
14	GA5077812	HOSE BARB, ELBOW, 90 DEGREE, 1 FLANGE X 1 HOSE, BANJO	1
15	GA5077803	HOSE BARB, ELBOW, 90 DEGREE, 1 FLANGE X 3/4 HOSE, BANJO, M100075BRB90	1
16	GA5077710	HOSE BARB, ELBOW, 90 DEGREE, 3/4 MALE THREAD X 1/2 HOSE, BANJO	2
17	GA5077717	HOSE BARB, ELBOW, 90 DEGREE, 3/4 MALE THREAD X 3/4 HOSE, BANJO	1
18	GA5077802	HOSE BARB, STRAIGHT, 1" FLANGE X 3/4" HOSE, BANJO, M100075BRB	1
19	GA3500715	HYDRAULIC ADAPTOR, ELBOW, 1 1/16" UNO TO 1 1/16" JIC, 90 DEG, S91-1717	1
20	GA3500761	HYDRAULIC ADAPTOR, ELBOW, 7/8" UNO TO 3/4" JIC, 90 DEG, S91-1214	1
21	GA3500716	HYDRAULIC ADAPTOR, ELBOW, 90 DEGREE, 9/16" JIC MALE X 9/16" UN MALE O-RING, S91-0909	1
22	GA5077874	MANIFOLD HOSE BARB 3", 45 DEGREE, M300BRB45	1
23	GA5000141	NUT M10 NYLOC ZP	4
24	GA4408595	PLATE, FILL PUMP MOUNT, BOLT ON BRACKET, G6 MY20	1
25	GA5069335	PLUG 1/4" BSPT BRASS	1
26	GA4583660	PLUMBING ADAPTOR, M300 FLANGE TO 3" NPT THREAD WITH SEAL	1
27	GA4583595	PLUMBING ADAPTOR, M300 FLANGE TO 3" NPT THREAD WITH SEAL & SIDE PORTS	1
28	GA2000148	PLUMBING FITTING, 3" FLANGE TO 3" BARB, SWEPT ELBOW, BANJO, M300BRBSWP90	1
29	GA2000131	PRESSSURE RELIEF VALVE, SPIKE, 4 BAR, 1/2" IN, 3/4" OUT, BRASS, CALEFFI	1
30	GA3000316	PRESSURE SENSOR TRANSDUCER, 0-25 BAR, 0.5-4.5V, IFM	1
31	GA2000146	PUMP, FILL, 3", HYDRAULICALLY DRIVEN, HYPRO	1
32	GA5076723	SEAL, EPDM, SUIT 3 FLANGE FITTING, BANJO	3
33	GA5077818	SEAL, SUIT 1 MANIFOLD FITTING, RUBBER EPDM, BANJO, M100G	9
34	GA5006111	SET SCREW M10 X 35 GR8.8 ZP	4
35	GA2000088	VALVE, CHECK, 3"MANIFOLD, FULL PORT, FLANGE, BANJO	1
36	GA5000117	WASHER 10mm FLAT SS HD	8

Fill Pump Assembly

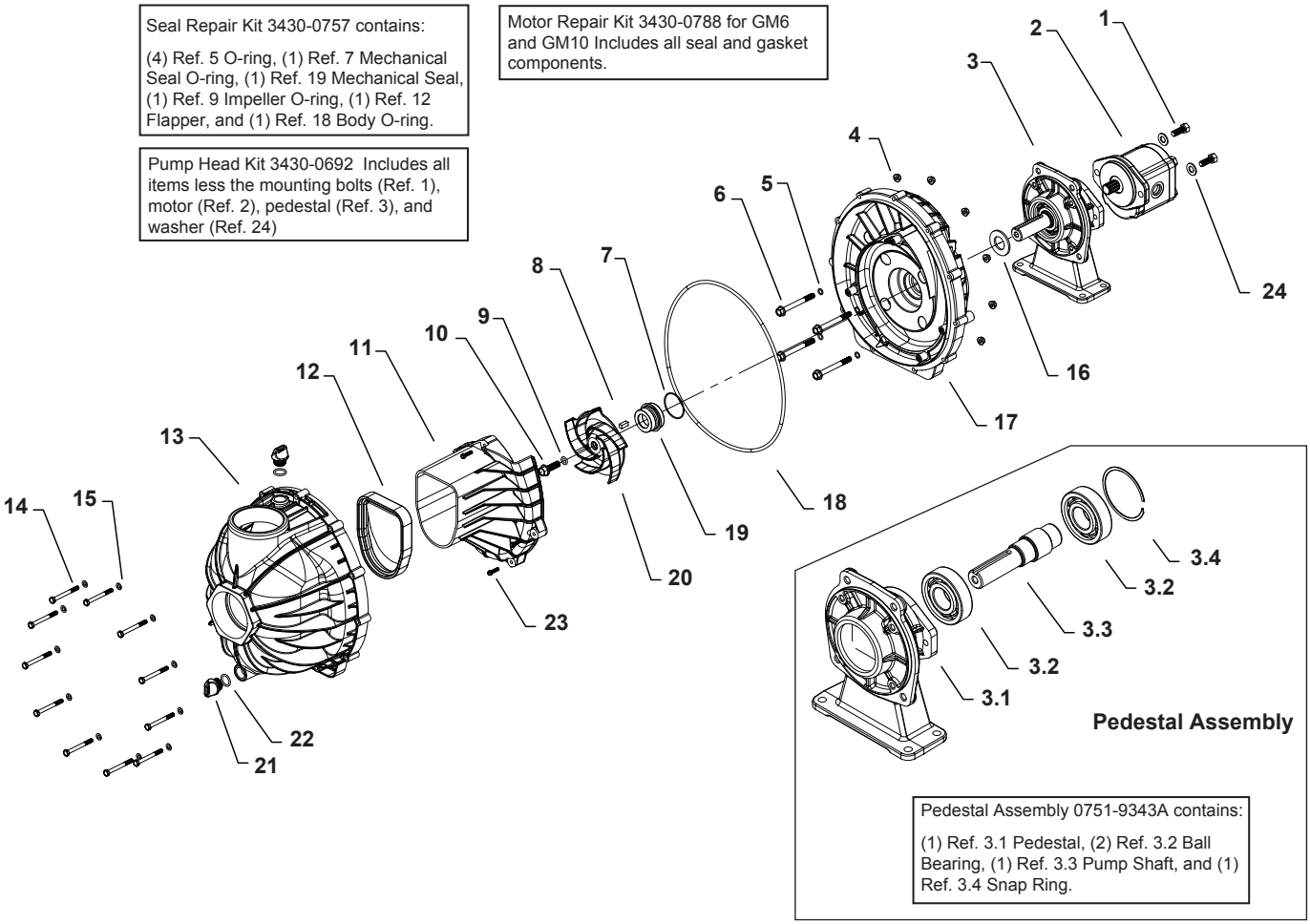

ITEM NO.	PART NUMBER	DESCRIPTION	2QTY.
1	GA0500200	SHCS, 3/8 UNC x 1", SS	2
2	GA3500933	HYDRAULIC MOTOR, 11.5CC, WITH CASE DRAIN, FILL PUMP, HYPRO, 2500-0119	1
-	GA3501145	SEAL, KIT, FILL PUMP HYDRAULIC MOTOR, GA3500933, MODEL G6, "NO CASE DRAIN", ALM2A-S-16-S2-P696	-
-	GA3501661	SEAL, REPAIR KIT, FILL PUMP HYDRAULIC MOTOR, GA3500933, MARZOCCHI MODEL WITH CASE DRAIN, ALM2A-S-16-S2-E2-P696	-
3	GA5078785	PEDASTAL ASSY, SPLINE SHAFT, SUIT, HYPRO FILL PUMP, 9343 SERIES, 0751-9343	1
4	GA2000403	SEAL KIT, COMPLETE, 3" FILL PUMP, GA2000146, 3430-0757	
5	GA2000403	SEAL KIT, COMPLETE, 3" FILL PUMP, GA2000146, 3430-0757	
6	GA5078788	BOLT, HEX FLANGE, SUIT, HYPRO PUMP, 9343 SERIES, 2210-0182	4
7	GA2000403	SEAL KIT, COMPLETE, 3" FILL PUMP, GA2000146, 3430-0757	
8	GA5078790	KEY WAY, SUIT, HYPRO PUMP, SERIES 9343, 1610-0069	1

Continued over page

Fill Pump Assembly

ITEM NO.	PART NUMBER	DESCRIPTION	2QTY.
9	GA2000403	SEAL KIT, COMPLETE, 3” FILL PUMP, GA2000146, 3430-0757	
10	GA5078792	BOLT, FLANGED HEX, SUIT, HYPRO PUMP, SERIES 9343, 2210-0181	1
11	GA5078793	PUMP VOLUTE, SUIT, HYPRO PUMP, SERIES 9343, 0150-0154P	1
12	GA2000403	SEAL KIT, COMPLETE, 3” FILL PUMP, GA2000146, 3430-0757	
13	GA2000328	HOUSING, FILL PUMP, FRONT, 3”, PENTAIR, 0100-1543PK	1
14	GA5004097	BOLT M6 X 60 GR8.8 ZP	15
15	GA5004437	WASHER M6 FLAT SS	15
16	GA5078797	SLINGER RING, SUIT, HYPRO PUMP, SERIES 9343, 1410-0091	1
17	GA2000329	HOUSING, FILL PUMP, REAR, 3”, PENTAIR, 0750-1543P	1
18	GA2000403	SEAL KIT, COMPLETE, 3” FILL PUMP, GA2000146, 3430-0757	
19	GA2000403	SEAL KIT, COMPLETE, 3” FILL PUMP, GA2000146, 3430-0757	
20	GA2000404	IMPELLER, 3” FILL PUMP, GA2000146, 0400-1543P	1
21	GA5078800	FILL/DRAIN PLUG, SUIT, HYPRO PUMP, SERIES 9343, 2404-0350P	2
22	GA5078801	O-RING, FILL PLUG, SUIT, HYPRO PUMP, SERIES 9343, 1720-0230	2
23	GA5078802	WASHER, HEX, HEAD SCREW, SUIT, HYPRO PUMP, SERIES 9343, 2210-0183	4
24	GA5002565	WASHER 3/8” X 1” FLAT SS	2

Chemical Pump Assembly

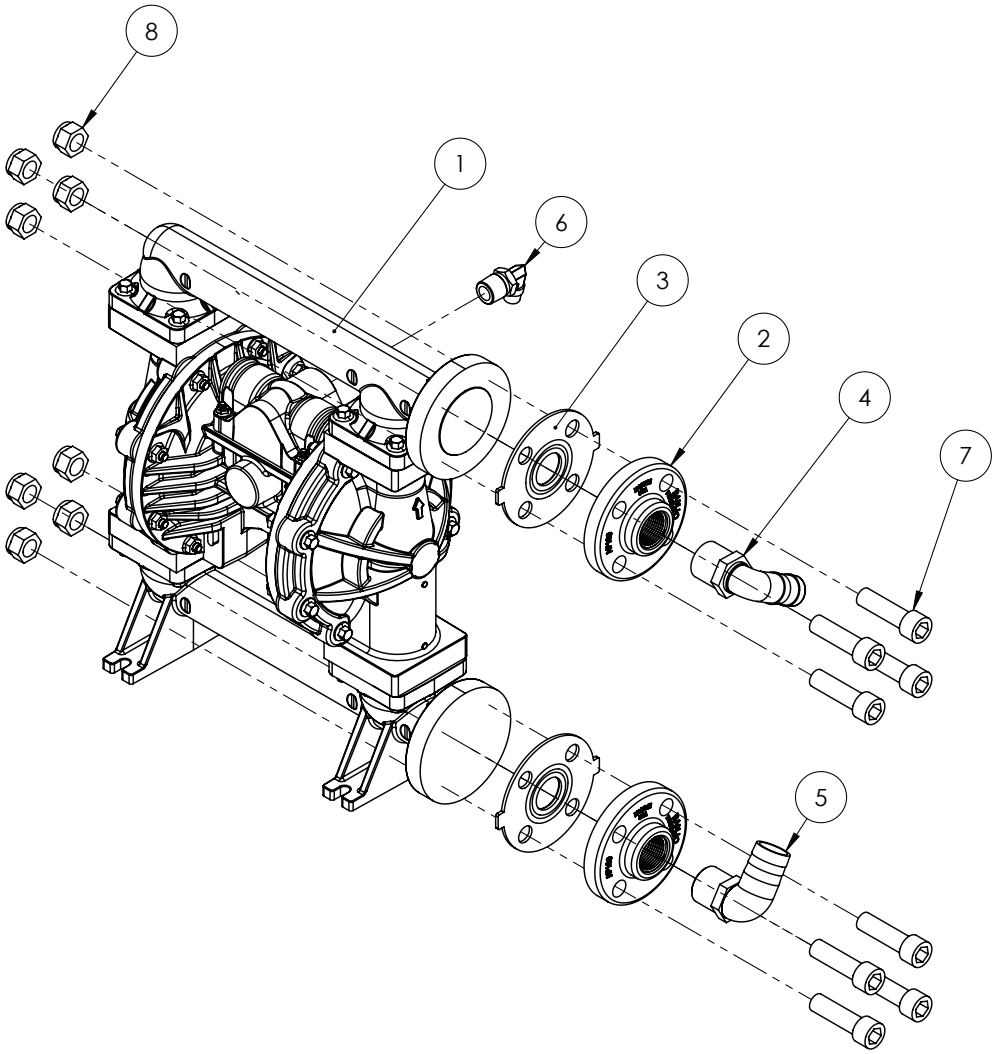

ITEM NO.	PART NUMBER	DESCRIPTION	QTY.
-	GA2000330	SEAL KIT, AIR VALVE, GRACO CHEMICAL TRANSFER GA2000152	1
-	GA2000363	SEAL KIT, DIAPHRAGM, GRACO CHEMICAL TRANSFER GA2000152	1
1	GA2000152	PUMP, CHEMICAL TRANSFER, DIAPHRAGM, SIDE PORTED	1
2	GA2000150	PLUMBING FITTING, ANSI FLANGE TO 1” FEMALE NPT THREAD	2
3	GA2000151	SEAL, 1” ANSI FLANGE	2
4	GA5077723	HOSE BARB, ELBOW, 90 DEGREE, 1” MALE X 1” HOSE	1
5	GA5077720	HOSE BARB, ELBOW, 90 DEGREE, 1" MALE THREAD X 1 1/4" HOSE	1
6	GA5078524	AIR FITTING, ELBOW, SWIVEL, 3/8” TUBE, 1/2” NPT MALE, PUSH IN, BRASS	1
7	GA5003687	SHCS M16 X 55 GR12.9 ZP	8
8	GA5001029	NUT M16 NYLOC ZP	8

Wash Down Gun Pump

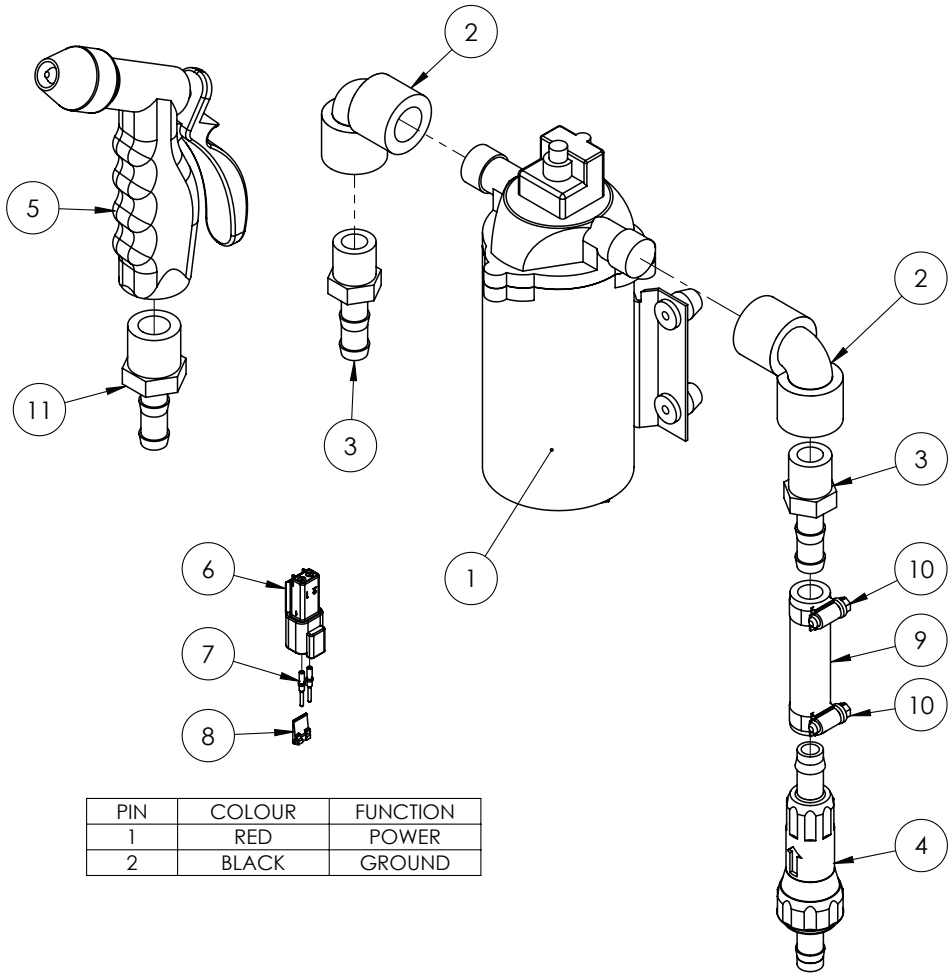

PIN	COLOUR	FUNCTION
1	RED	POWER
2	BLACK	GROUND

ITEM NO.	PART NUMBER	DESCRIPTION	QTY.
-	GA5071565	PRESSURE SWITCH, 45 PSI, SUIT 2088 SERIES SHURFLO 11.3LT PUMP	1
-	GA2000211	HOSE, PRESSURE, 12MM, BLACK, 250PSI - WASH DOWN GUN TO PUMP - CUT TO 3500 MM	1
1	GA5023405	PUMP, 12 VOLT, 11.3 L/MIN, 45 PSI MAX, SHURFLO	1
2	GA5077652	STREET ELBOW, 90 DEGREE, 1/2" FEMALE THREAD	2
3	GA5077702	HOSE BARB, STRAIGHT, 1/2" MALE THREAD X 1/2" HOSE	2
4	GA5008745	FILTER, INLINE, 1/2" HOSE BARBS	1
5	GA5051390	WASH DOWN GUN	1
6	GA5052830	RECEPTACLE, 2 WAY, PINS, DT SERIES, DEUTSCH, DT04-2P	1
7	GA5061240	PIN, MALE, SOLID, NICKEL, NUMBER 16, GREEN BAND, AWG 14, DEUTSCH	2
8	GA5052835	WEDGE LOCK, 2 WAY, DT SERIES, DEUTSCH	1
9	GA5023494	HOSE, 1/2” PRESSURE, NYLON, BLACK - CUT TO 80 MM	1
10	GA5000469	HOSE CLAMP, 1/2" SS 12-20/9W3	2
11	GA5077713	HOSE BARB, STRAIGHT, 3/4" MALE THREAD X 1/2" HOSE	1

Chapter 3

FLUSH TANK

Flush Tank Mounting

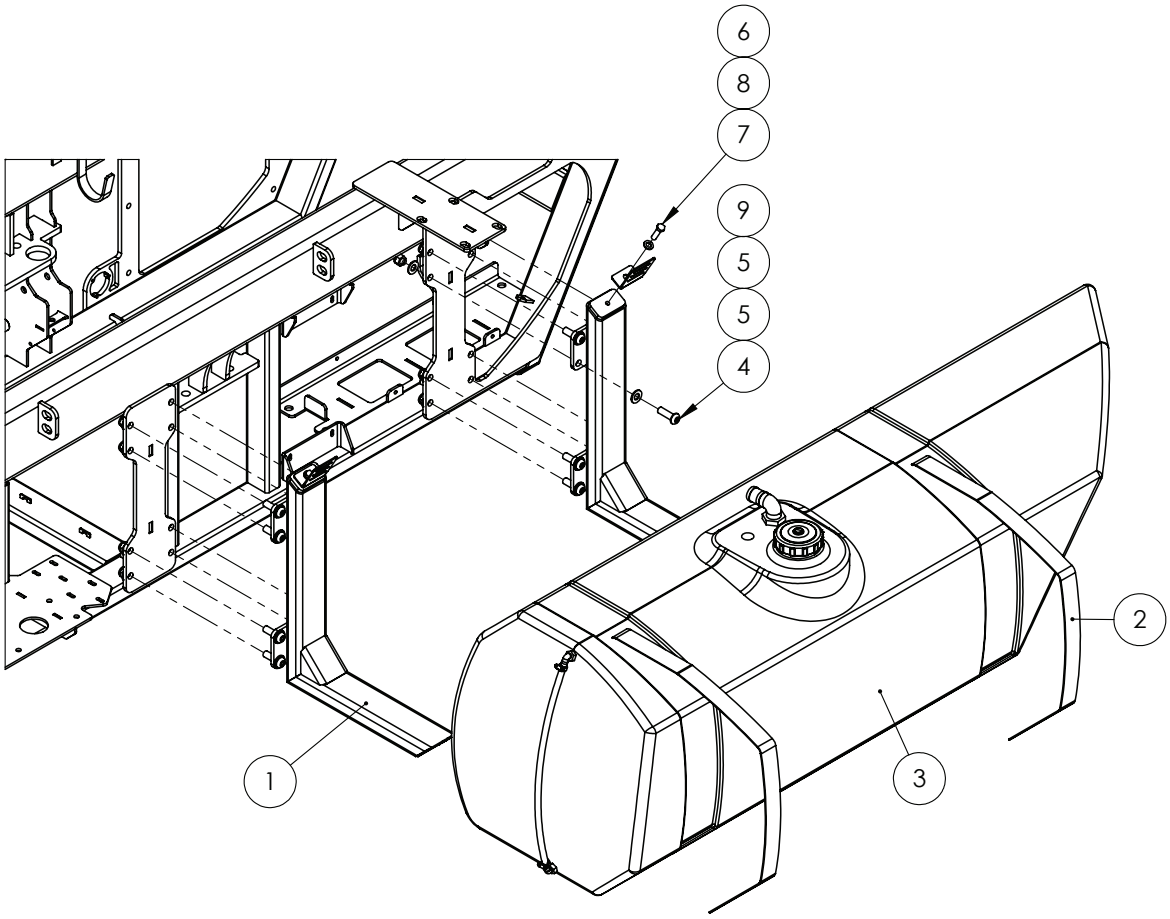

ITEM NO.	PART NUMBER	DESCRIPTION	QTY.
1	GA4602310	MOUNTING BRACKET, FRESH WATER TANK	2
2	GA5003859	STRAP, TANK, 50MM, GOLDACRES BRANDED - CUT TO 1400 MM EACH	2
3	*	RINSE WATER TANK ASSEMBLY	1
4	GA5075140	BHCS M16 X 50 GR12.9 ZP	16
5	GA5001043	WASHER 16MM FLAT SS HD	32
6	F70127A	50MM TANK STRAP BRACKET	2
7	GA5000327	SET SCREW M12 X 45 ZP GR8.8	2
8	GA5000577	WASHER 12MM FLAT SS HD	2
9	GA5001029	NUT M16 NYLOC ZP	16

* Sub-assembly on following pages

Flush Tank Assembly

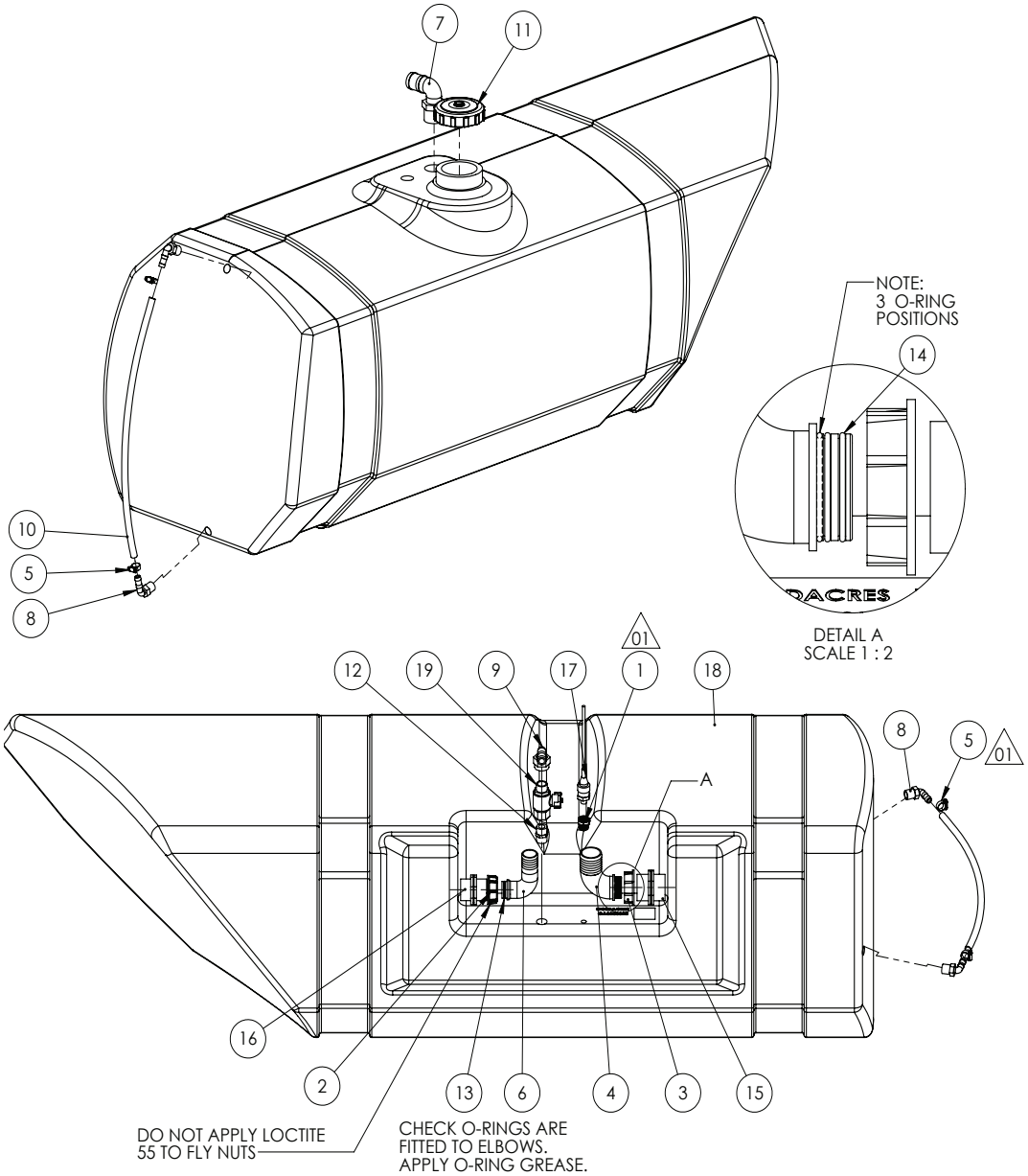

ITEM NO.	PART NUMBER	DESCRIPTION	QTY.
1	GA5078005	BUSH, REDUCING, POLY, 1/2" MALE THREAD X 1/4" FEMALE THREAD, BANJO, RB050-025	1
2	GA5076604	FLY NUT, 1 1/2, ARAG, 2002060	1
3	GA5076605	FLY NUT, 2", ARAG, 2002070	1
4	GA5076262	HOSE BARB, ELBOW, 90 DEGREE, 2" FLY NUT END X 52 MM HOSE, ARAG, 116752	1
5	GA5000469	HOSE CLAMP, 1/2" SS 12-20/9W3	2
6	GA5076260	HOSE BARB, ELBOW, 90 DEGREE, 1 1/2 FLY NUT END X 40MM HOSE, 116640	1
7	GA5077736	HOSE BARB, ELBOW, 90 DEGREE, 1 1/2 MALE THREAD X 1 1/2 HOSE, BANJO, HB150-90	1

Continued over page

Flush Tank & Frame

ITEM NO.	PART NUMBER	DESCRIPTION	QTY.
8	GA5077708	HOSE BARB, ELBOW, 90 DEGREE, 1/2 MALE THREAD X 1/2 HOSE, BANJO, HB050-90	2
9	GA5077746	HOSE BARB, ELBOW, 90 DEGREE, 3/4 FEMALE THREAD X 3/4 HOSE, BANJO, HBF075-90	1
10	GA2000209	HOSE, CLEAR, 12MM, SIGHT TUBE, HOS12SIGHT	1
11	GA5076885	LID, DIAMETER 113, WITH BREATHER, 354230	1
12	GA5077913	NIPPLE, 3/4 MALE X 3/4 MALE, SHORT, BANJO, NIP075SH	1
13	GA5077679	O RING, 30 X 3MM, G10061	1
14	GA5076097	O RING, 42.52 X 2.62, 110193	3
15	GA5078410	PLUMBING FITTING, NIPPLE, 2", ARAG, 2502070	1
16	GA5078409	PLUMBING FITTING, NIPPLE, 1 1/2", ARAG, 2502060	1
17	GA3000284	PRESSURE TRANSDUCER, 0-5PSI, 1-5V, DEUTSCH, RAVEN, 14220000126	1
18	GA8500025	TANK, RINSE, 500L, G6, MY20	1
19	GA5018315	VALVE, BALL, 20MM, 3/4" MALE, FEMALE, BLACK BUTTERFLY HANDLE, BRASS	1

Chapter 4

RH POD

Not Fitted

Chapter 5

LH POD

Plumbing Pod Mounting

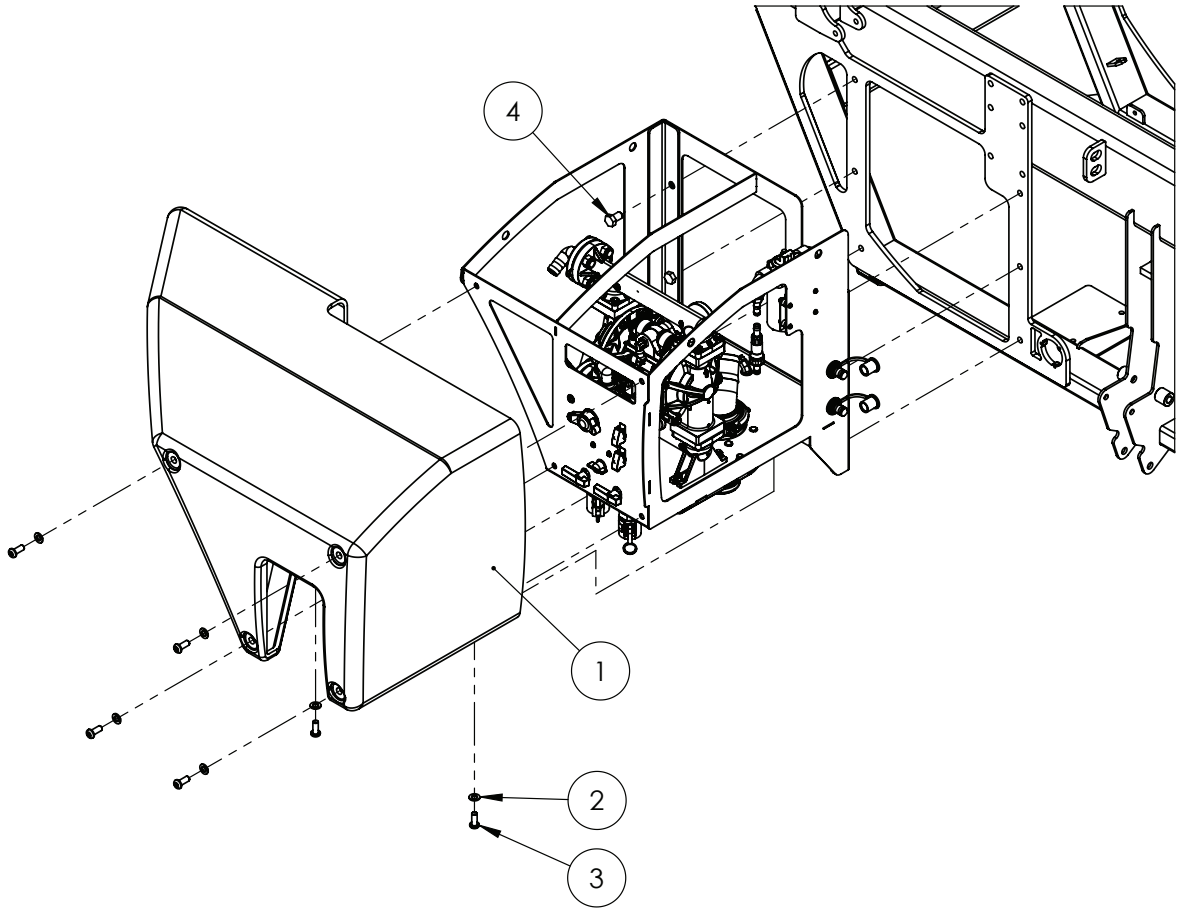

ITEM NO.	PART NUMBER	DESCRIPTION	QTY.
1	GA5078499	COVER, PLUMBING POD, ROTOMOULDED PLASTIC, BLACK	1
2	GA5000577	WASHER 12MM FLAT SS HD	6
3	GA5051530	BHCS M12 X 30 SS A2-70	6
4	GA5000903	BOLT M16 X 25 GR8.8 ZP	6

LH Pod, Fill

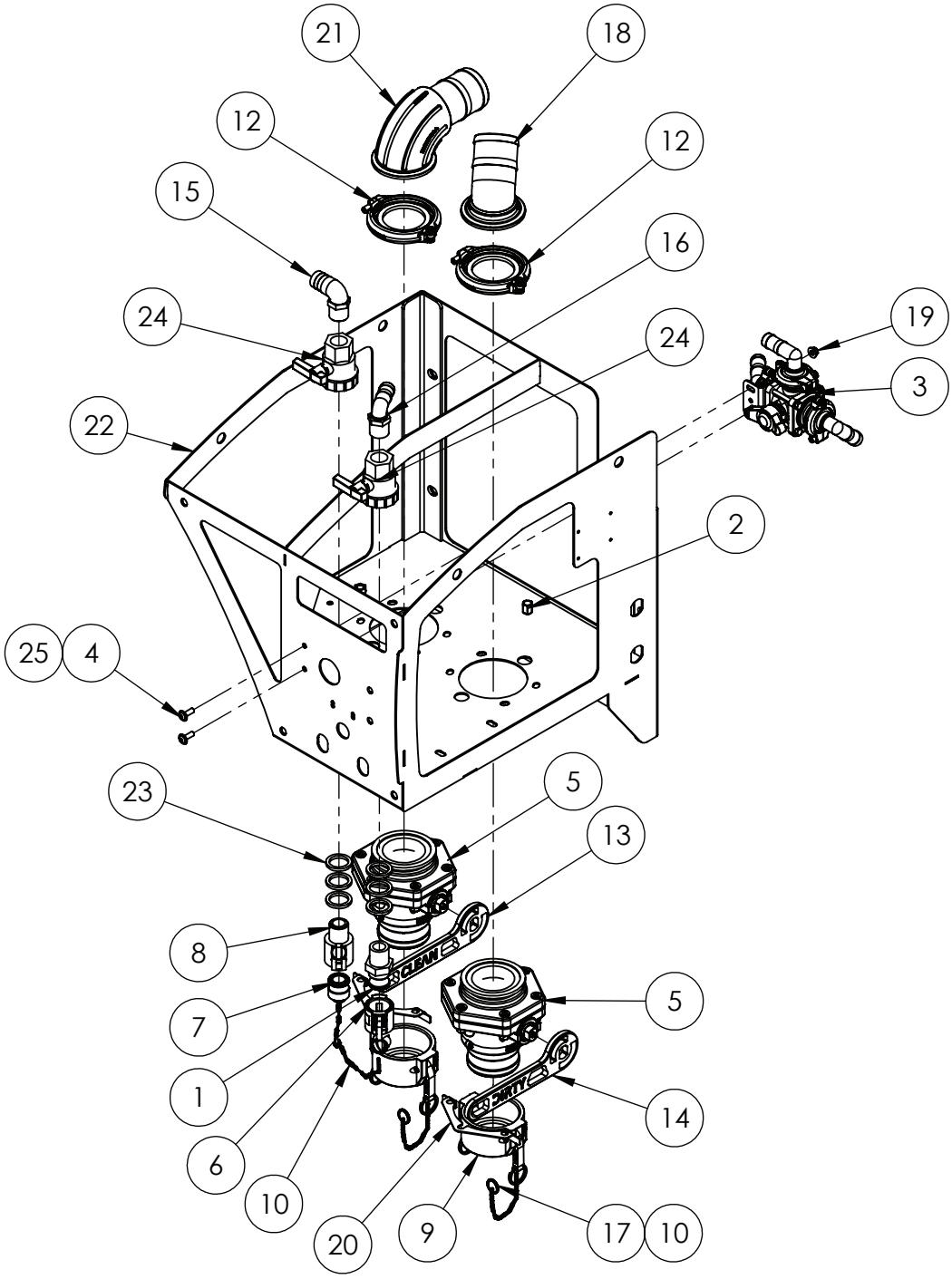

Continued over page

LH Pod, Fill

ITEM NO.	PART NUMBER	DESCRIPTION	QTY.
1	GA5076012	1” MALE ADAPTOR MALE THREAD	1
2	GA5074085	ADAPTOR FITTING, BRASS, 1/4” BSPT MALE, 1/4” BSPT FEMALE, BF072-0404	1
3	GA4949505	ASSEMBLY DRAWING ONLY, VALVE, CHEMICAL PUMP OUTLET SELECTOR, G6 MY20	1
4	GA5011473	BHCS M8 X 25 SS A2-70	2
5	GA2000122	BALL VALVE, 3” FLANGE TO 3” MALE CAMLOCK, MVSF300FP, BANJO	2
6	GA5076004	CAM LEVER, CAP, SUITS 1 AND 1 1/4 MALE, BANJO, 100125CAP	1
7	GA5076005	CAM LEVER, MALE PLUG, SUITS 1 & 1 1/4 COUPLINGS, BANJO	1
8	GA5076007	CAM LEVER, 1 FEMALE COUPLER, 1 MALE THREAD,BANJO	1
9	GA5076719	CAM LEVER, 3” FEMALE CAP, BANJO	2
10	GA4912615	CHAIN 2 X 20 mm SS 316, 146102, CUT 20 LINKS, GA5001491	2
11	GA4912620	CHAIN 2 X 20 mm SS 316, 146102, CUT 20 LINKS,GA5001491	1
12	GA2000116	FLANGE CLAMP, AND GASKET, 3”, SERIES 300, HYPRO	2
13	GA4406155	HANDLE, 3” BALL VALVE, PLUMBING POD, “CLEAN”, G6 MY20	1
14	GA4406150	HANDLE, 3” BALL VALVE, PLUMBING POD, “DIRTY”, G6 MY20	1
15	GA5077720	HOSE BARB, ELBOW, 90 DEGREE, 1 MALE THREAD X 1 1/4 HOSE, BANJO	1
16	GA5077723	HOSE BARB, ELBOW, 90 DEGREE, 1” MALE X 1” HOSE, BANJO	1
17	GA5002077	KEY RING, 25mm, SS	5
18	GA5077874	MANIFOLD HOSE BARB 3”, 45 DEGREE, M300BRB45	1
19	GA5004917	NUT M8 NYLOC ZP	2
20	GA4412695	PLATE, VALVE STOP, 3”, STUBBY, BANJO, MVS300CFFP, HOPPER	2
21	GA2000148	PLUMBING FITTING, 3” FLANGE TO 3” BARB, SWEPT ELBOW, BANJO, M300BRBSWP90	1
22	GA4602400	PLUMBING POD FRAME, G6 MY20	1
23	GA4552865	SPACER, RING, 34mm, POD FILL POINT FITTING	6
24	GA5078164	VALVE, BALL, 1 FEMALE THREAD INLET / OUTLET, FULL PORT, LEVER HANDLE, BANJO	2
25	GA5003643	WASHER 8mm FLAT SS HD	4

Chemical Pump Mouniting

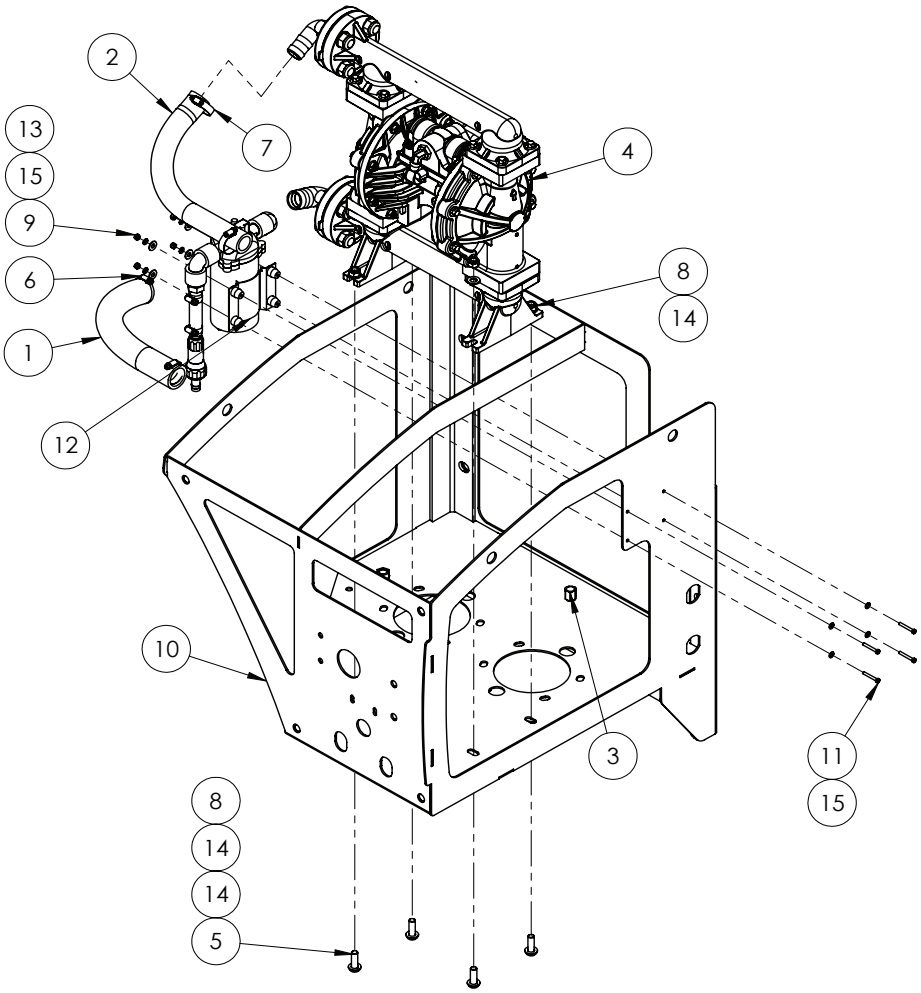

ITEM NO.	PART NUMBER	DESCRIPTION	QTY.
1	GA2000285	1 1/4" SUCTION WIRE HOSE CUT 420mm, GA2000224	1
2	GA2000284	1" PRESSURE HOSE CUT 400mm, GA2000219	1
3	GA5074085	ADAPTOR FITTING, BRASS, 1/4" BSPT MALE, 1/4" BSPT FEMALE, BF072-0404	1
4	GA4949435	ASSEMBLY DRAWING ONLY, CHEMICAL PUMP, GRACO HUSKY, G6, MY20	1
5	GA5048120	BHCS M10 X 30 SS A2-70	4
6	GA5016813	HOSE CLAMP, 1 SS (25-40/12W)	2
7	GA5001681	HOSE CLAMP, 1" SS (20-32/12W)	2
8	GA5051445	NUT M10 NYLOC SS	4
9	GA5003501	NUT M4 NYLOC ZP	4
10	GA4602400	PLUMBING POD FRAME, G6 MY20	1
11	GA5011367	SHCS M4 X 30 GR12.9 ZP	4
12	GA4949515	WASH DOWN GUN PUMP SUB ASSEMBLY, LH POD, SP, 2017	1
13	GA5017643	WASHER 1/4 ID X 5/8 OD X 18G FLAT SS	4
14	GA5000117	WASHER 10mm FLAT SS HD	8
15	GA5020510	WASHER 4mm FLAT SS	8

Chemical Plumbing Pod Frame

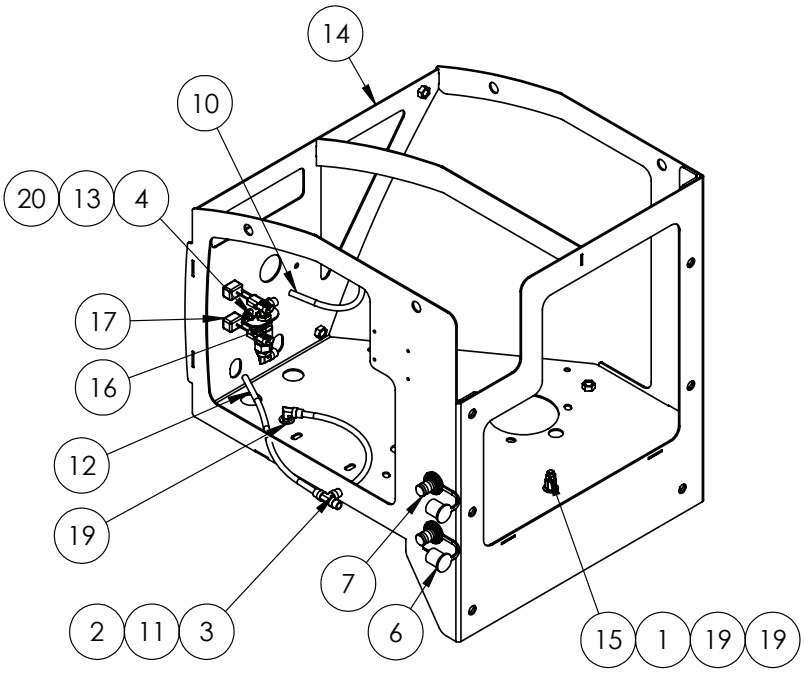

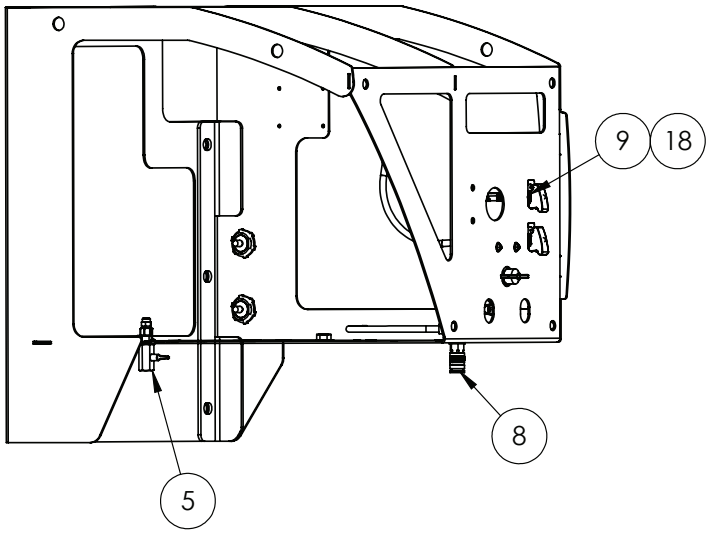

ITEM NO.	PART NUMBER	DESCRIPTION	QTY.
1	GA5074085	ADAPTOR FITTING, BRASS, 1/4” BSPT MALE, 1/4” BSPT FEMALE, BF072-0404	1
2	GA5078518	AIR FITTING, ELBOW, SWIVEL, 3/8” TUBE, 1/4” NPT MALE, PUSH IN, BRASS, ALKON - AQ69-DOTS-6X4	1
3	GA5078516	AIR FITTING, TEE, 3/8” TUBE, PUSH IN, BRASS, ALKON - AQ64-DOT-6	1
4	GA5004053	BHCS M6 X 20 SS A2-70	2
5	GA5018321	BALL VALVE, 1/4” FEMALE, BLACK LEVER HANDLE, CHROMED	1
6	GA5006381	BATTERY JUMPER STUD NEGATIVE	1
7	GA5006383	BATTERY JUMPER STUD POSITIVE	1
8	GA5076620	COUPLING, AIR, 1/4” BSPP FEMALE X FEMALE,BRASS, 200	1

Continued over page

ITEM NO.	PART NUMBER	DESCRIPTION	QTY.
9	GA5012175	COVER, TOGGLE SWITCH, WATERPROOF, NARVA	2
10	GA7000018	HOSE, PNEUMATIC, 3/8”, CUT 270mm, GA7000016	1
11	GA7000019	HOSE, PNEUMATIC, 3/8”, CUT 300mm, GA7000016	1
12	GA7000020	HOSE, PNEUMATIC, 3/8”, CUT 330mm, GA7000016	1
13	GA5048115	NUT M6 NYLOC ZP	2
14	GA4602400	PLUMBING POD FRAME, G6 MY20	1
15	GA5045140	PNEUMATIC FITTING, NIPPLE, PUSH IN 6mm X 1/4” BSPT, BRASS	1
16	GA4949510	PRODUCTION DRAWING ONLY, VALVE, CHEMICAL PUMP AIR FEED, G6 MY20	1
17	GA5060064	SWITCH, FILL PUMP, PRE ASSEMBLED LOOM WITH CONNECTOR	2
18	GA5016753	TOGGLE SWITCH COVER (NARVA)	2
19	GA5017655	WASHER 1/2 FLAT SS	4
20	GA5004437	WASHER 6mm FLAT SS	4

Chemical Pump Air Feed Valve

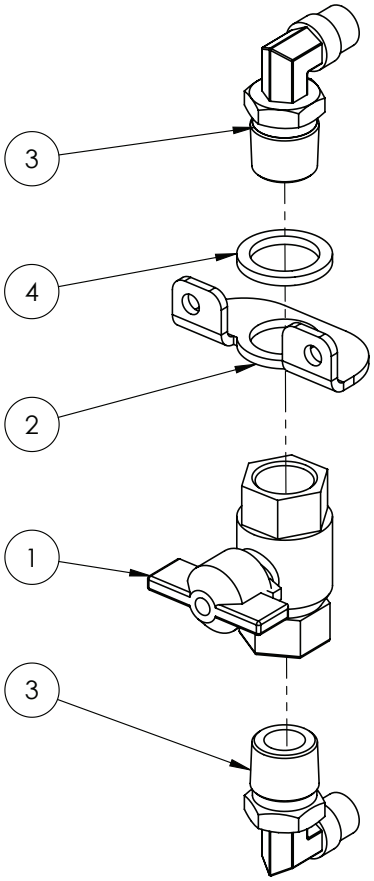

ITEM NO.	PART NUMBER	DESCRIPTION	QTY.
1	GA5018307	VALVE, BALL, 12MM, 1/2” FEMALE, BUTTERFLY HANDLE, BRASS	1
2	GA4406205	PLATE, BRASS 1/2” BALL VALVE MOUNT BRACKET	1
3	GA5078524	AIR FITTING, ELBOW, SWIVEL, 3/8” TUBE, 1/2” NPT MALE, PUSH IN, BRASS	2
4	GA4407545	WASHER, SPACER, OD 30, ID 22, 3MM THICK, SS	1

Chemical Pump Output Selector Valve

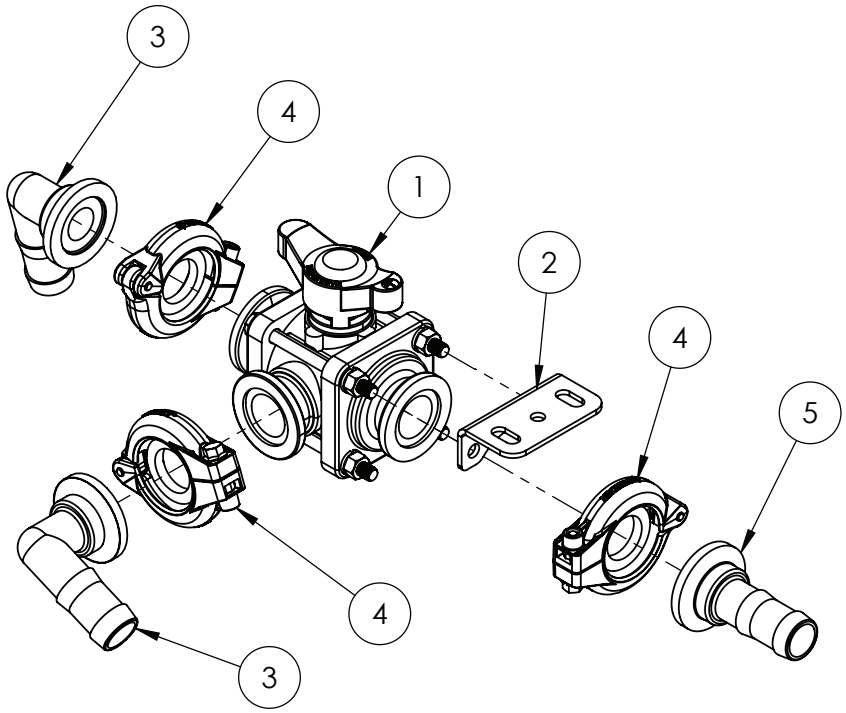

ITEM NO.	PART NUMBER	DESCRIPTION	QTY.
1	GA5077901	VALVE, 3 WAY, 1” FLANGE PORTS, SIDE LOAD	1
2	GA4502210	MOUNTING PLATE, TO SUIT BALL VALVE	1
3	GA5077812	HOSE BARB, ELBOW, 90 DEGREE, 1" FLANGE X 1" HOSE	2
4	GA2000113	FLANGE CLAMP, AND GASKET, 1", SERIES 100	3
5	GA5077811	HOSE BARB, STRAIGHT, 1" FLANGE X 1" HOSE	1

Micromatic Rinse Socket

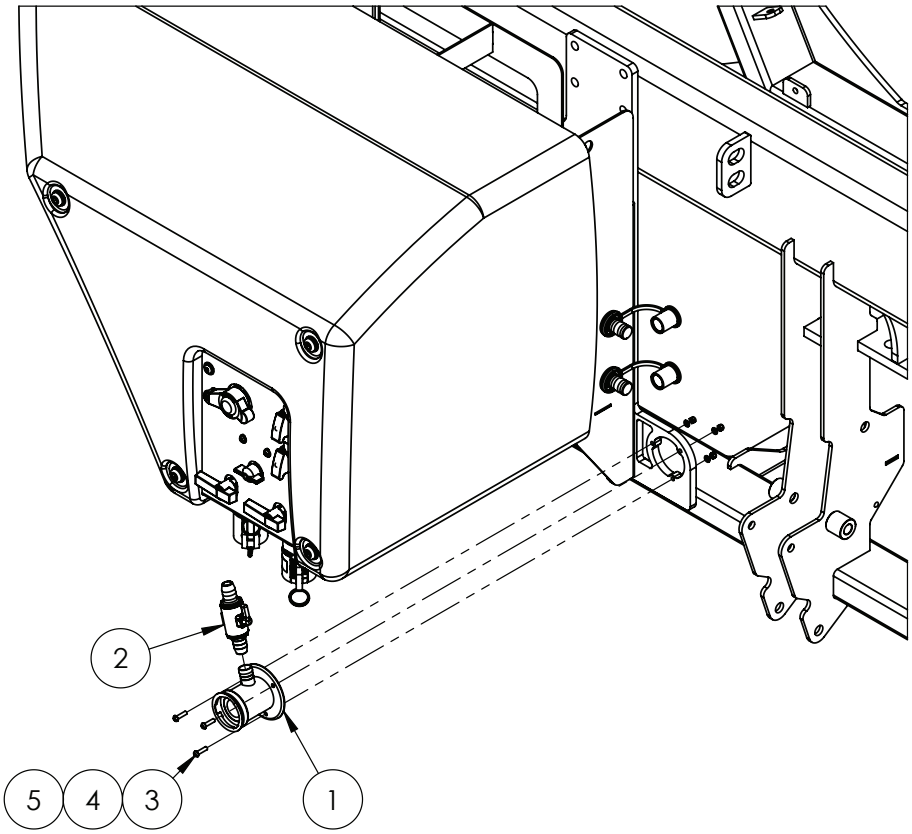

ITEM NO.	PART NUMBER	DESCRIPTION	QTY.
1	GA5018800	RINSING SOCKET, 3 PIN, MICROMATIC / ENVIRO DRUM COUPLING	1
2	GA2000164	BALL VALVE, MICRO, 2 WAY, 3/4" HOSE BARBS	1
3	GA0500004	BHCS M5 X 20 SS A2-70	3
4	GA5003983	WASHER 5MM FLAT SS	3
5	GA5003974	NUT M5 NYLOC ZP	3

Chemical Probe Hose Lance

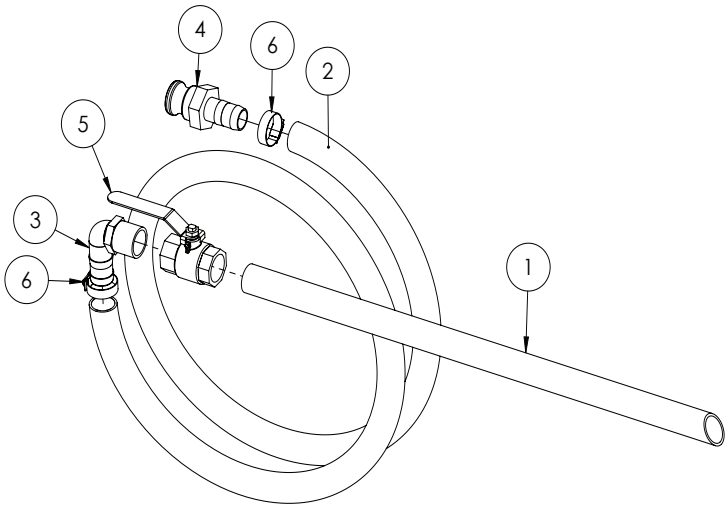

ITEM NO.	PART NUMBER	DESCRIPTION	QTY.
-	GA4948250	CHEMICAL SUCTION PROBE, ASSEMBLED	-
1	GA5013603	POLY PIPE 25 (CUT 630MM LONG)	1
2	GA2000220	HOSE, SUCTION, PVC, 25MM, BLACK - CUT 3200 MM LONG	1
3	GA5077723	HOSE BARB, ELBOW, 90 DEGREE, 1" MALE X 1" HOSE, BANJO	1
4	GA5076011	CAM LEVER, 1" MALE COUPLING X 1" HOSE BARB, BANJO	1
5	GA5018319	VALVE, BALL, 25MM FEMALE THREAD INLET / OUTLET, LEVER HANDLE, SS	1
6	GA5001681	HOSE CLAMP, 1" SS (20-32/12W)	2

Enviro Coupling & Hose

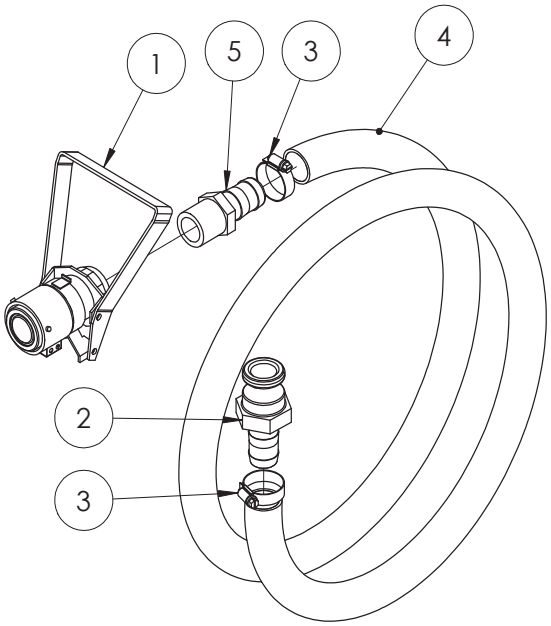

ITEM NO.	PART NUMBER	DESCRIPTION	QTY.
-	GA5020600	ENVIRO DRUM / MICROMATIC COUPLING WITH SUCTION HOSE	-
1	GA5018803	MICROMATIC DRUM VALVE COUPLING, 3 PIN, VITON SEALS	1
	GA5018799	SEAL KIT, SUIT MICROMATIC / ENVIRO DRUM COUPLING GA5018803	-
2	GA5076011	CAM LEVER, 1" MALE COUPLING X 1" HOSE BARB, BANJO	1
3	GA5001681	HOSE CLAMP, 1" SS (20-32/12W)	2
4	GA2000220	HOSE, SUCTION, PVC, 25MM, BLACK - CUT 2840MM LONG	1
5	GA5077718	HOSE BARB, STRAIGHT, 1" MALE THREAD X 1" HOSE	1

Chapter 6

DIRECT CHEMICAL INJECTION

Not Fitted

Chapter 7

DUAL PRODUCT

Not Fitted

Chapter 8

INDUCTION HOPPER

Hopper Mounting Assembly - Up to S/N 204011

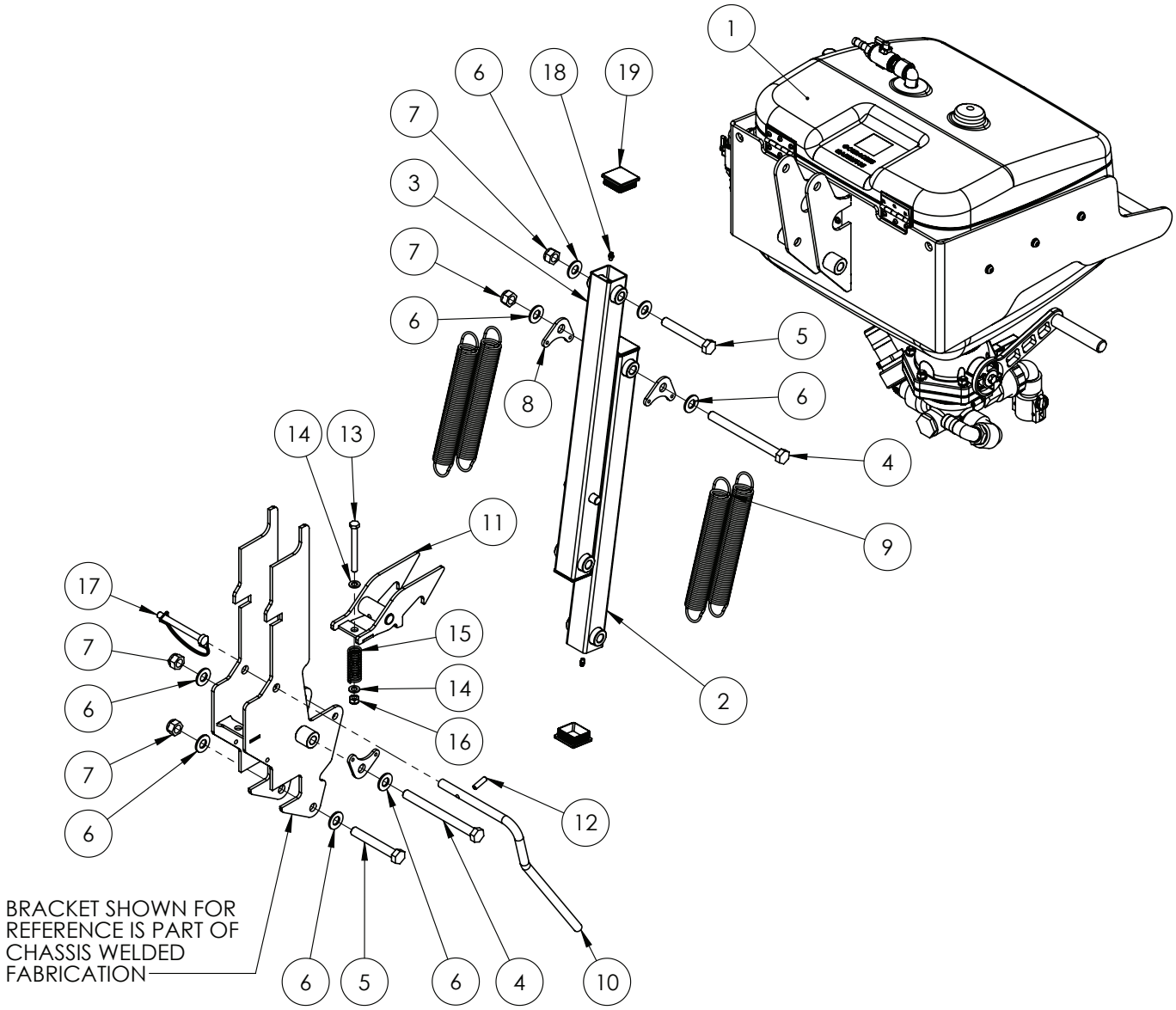

ITEM NO.	PART NUMBER	DESCRIPTION	QTY.
1	GA4949280*	HOPPER, TANK, ASSEMBLY	1
2	GA4602315	ARM, HOPPER, LOWER, BLACK	1
3	GA4602320	ARM, HOPPER, UPPER, BLACK	1

* Sub-assembly on following pages

Continued over page

Hopper Mounting Assembly

ITEM NO.	PART NUMBER	DESCRIPTION	QTY.
4	GA5000879	BOLT M16 X 180 GR8.8 ZP	2
5	GA5000855	BOLT M16 X 110 GR8.8 ZP	2
6	GA5001043	WASHER 16MM FLAT SS HD	8
7	GA5001029	NUT M16 NYLOC ZP	4
8	GA4522294	MOUNTING PLATE, DOUBLE INDUCTION HOPPER SPRING	4
9	GA5007073	SPRING, TENSION, 38.2 OD X 284.3 LONG X 3.55MM, INDUCTION HOPPER	4
10	GA4602330	HANDLE, LATCH, HOPPER, BLACK	1
11	GA4602325	LATCH, HOPPER, BLACK	1
12	GA5075130	ROLL PIN M8 X 30MM COATED	1
13	GA5006091	BOLT M10 X 100 GR8.8 ZP	1
14	GA5000117	WASHER 10MM FLAT SS HD	2
15	GA5007329	SPRING COMPRESSION, 76.2MM X 25.4 X 3.15MM, GOLD	1
16	GA5000141	NUT M10 NYLOC ZP	1
17	GA5048380	PIN, 11MM OD SHAFT, SPRING STEEL WIRE LOOP LOCK, YELLOW ZINC	1
18	GA5012203	GREASE NIPPLE, SHORT, 1/4" UNF	4
19	GA5003783	END CAP, PLASTIC, BLACK, INSERT, RHS. 50 X 50, 0.8 - 2.5MM WALL	4

* Sub-assembly on following pages

Hopper Mounting Assembly - From S/N 204012

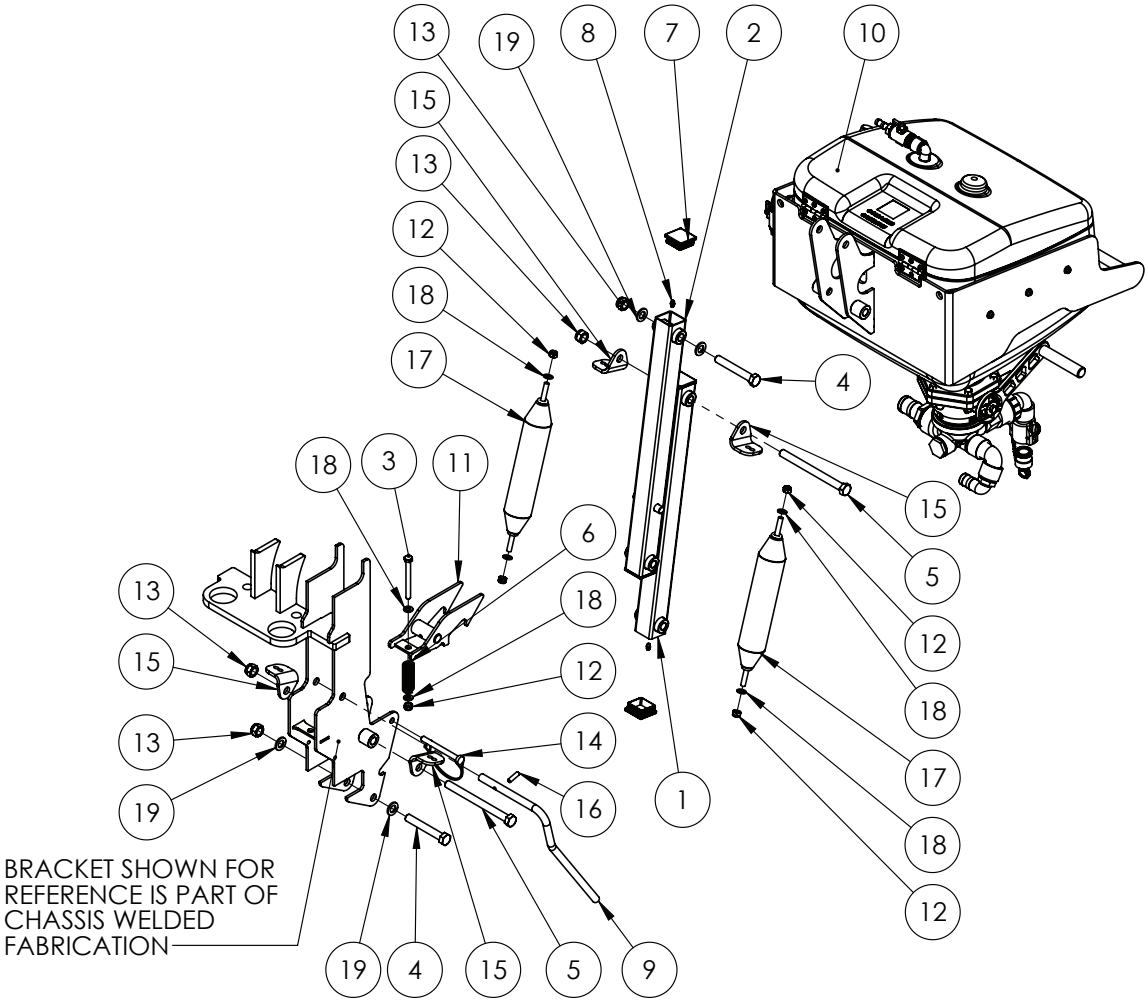

ITEM NO.	PART NUMBER	DESCRIPTION	QTY.
1	GA4602315	ARM, HOPPER, LOWER, BLACK, G6 MY20	1
2	GA4602320	ARM, HOPPER, UPPER, BLACK, G6 MY20	1
3	GA5006091	BOLT M10 X 100 GR8.8 ZP	1
4	GA5000855	BOLT M16 X 110 GR8.8 ZP	2
5	GA5051090	BOLT M16 X 190 GR8.8 ZP	2
6	GA5007329	COMPRESSION SPRING GOLD	1
7	GA5003783	END CAP, PLASTIC, BLACK, INSERT, RHS. 50 X 50, 0.8 - 2.5mm WALL	4
8	GA5012203	GREASE NIPPLE, SHORT, 1/4 UNF, MACH0207	4
9	GA4602330	HANDLE, LATCH, HOPPER, BLACK, G6 MY20	1
10	GA4949280	HOPPER, TANK, ASSEMBLY, G6, MY20	1
11	GA4602325	LATCH, HOPPER, BLACK, G6 MY20	1
12	GA5000141	NUT M10 NYLOC ZP	5
13	GA5001029	NUT M16 NYLOC ZP	4
14	GA5048380	PIN SHAFT LOCKING 11mm	1
15	GA4000037	PLATE, SPRING MOUNT, HOPPER	4

Hopper Mounting Assembly - From S/N 204012

ITEM NO.	PART NUMBER	DESCRIPTION	QTY.
16	GA5075130	ROLL PIN M8 X 30mm COATED	1
17	GA5025938	SPRING, TENSION, 6.3mm WIRE X 60 OD X 285 LONG, INDUCTION HOPPER	2
18	GA5000117	WASHER M10 FLAT SS HD	6
19	GA5001043	WASHER M16 FLAT SS HD	4

Hopper Tank Bottom Assembly

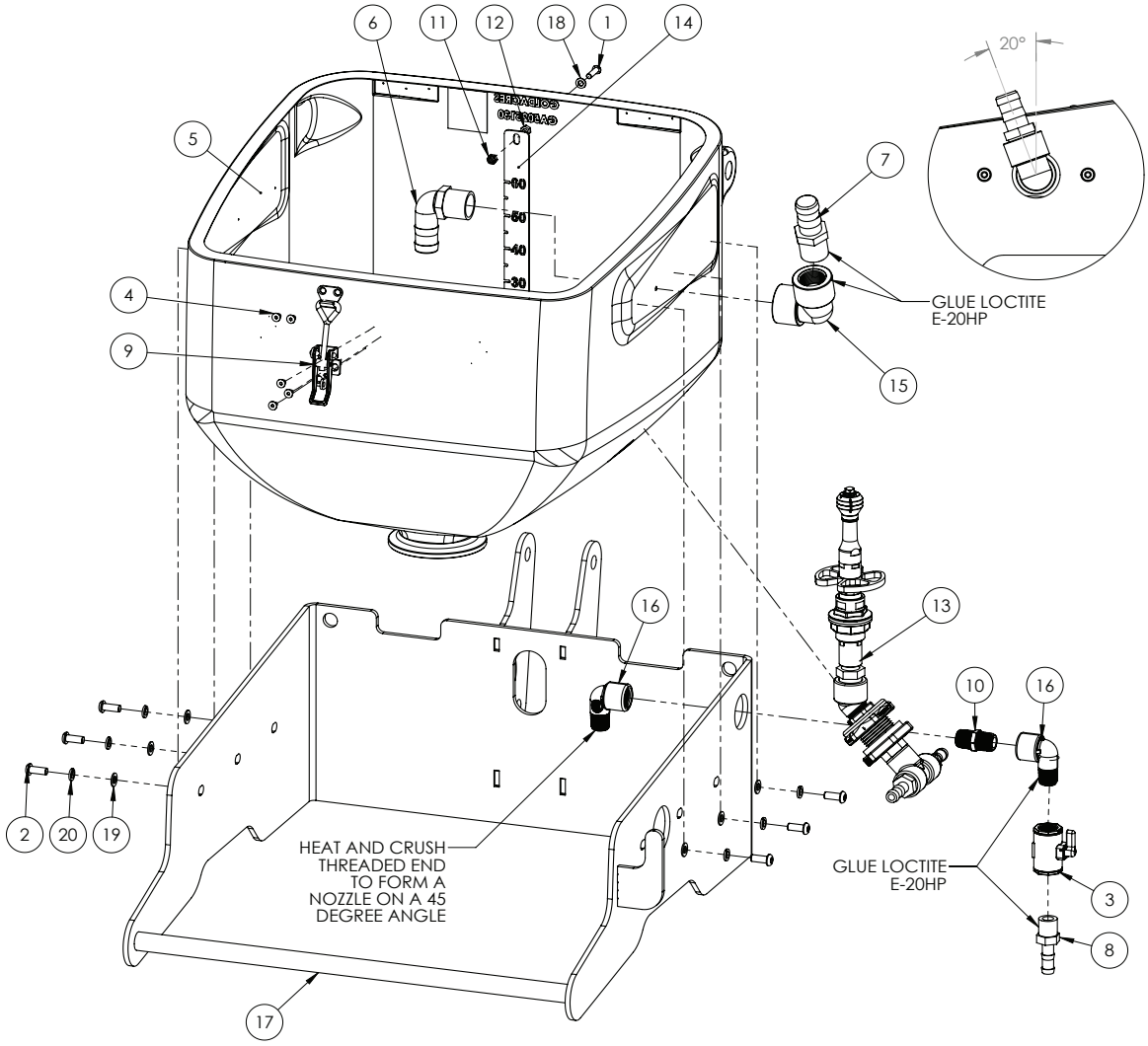

USE LOCTITE 55 THREAD CORD ON ALL
PLUMBING FITTING THREADS UNLESS OTHERWISE NOTED

ITEM NO.	PART NUMBER	DESCRIPTION	QTY.
1	GA5004067	BHCS M6 X 25 SS A2-70	1
2	GA0500102	BHCS M8 X 20 SS A2-70	6
3	GA2000163	BALL VALVE, MICRO, 2 WAY, 1/2” NPT FEMALE THREADS, LV050V, BANJO	1
4	GA0500101	CSCS M5 X 10 SS A2-70	5
5	GA5025130	HOPPER, BODY, G6, MY20	1
6	GA5077723	HOSE BARB, ELBOW, 90 DEGREE, 1” MALE X 1” HOSE, BANJO	1
7	GA5077718	HOSE BARB, STRAIGHT, 1 MALE THREAD X 1 HOSE, BANJO	1
8	GA5077702	HOSE BARB, STRAIGHT, 1/2 MALE THREAD X 1/2 HOSE, BANJO, HB050	1
9	GA5007071	LATCH, INDUCTION HOPPER LID, STAINLESS STEEL	1

* Sub-assembly on following pages

Continued over page

Hopper Tank Bottom Assembly

ITEM NO.	PART NUMBER	DESCRIPTION	QTY.
10	GA5077911	NIPPLE, SHORT, 1/2 MALE THREAD X 1/2 MALE THREAD, BANJO. NIP050-SH	1
11	GA5004429	NUT M6 NYLOC SS	1
12	GA5049030	NUT M6 SS	1
13	GA4949305	PRODUCTION DRAWING ONLY. DRUM RINSE NOZZLE, HOPPER, G6 MY20	1
14	GA4408895	SCALE, HOPPER, 60L SERIES 2	1
15	GA5077655	STREET ELBOW, 90 DEGREE, 1 FEMALE THREAD X 1 FEMALE THREAD, BANJO, EL100-90	1
16	GA5078133	STREET ELBOW, 90 DEGREE, 1/2 FEMALE THREAD X 1/2 MALE THREAD, BANJO	2
17	GA4602245	SUPPORT, HOPPER, G6, MY20	1
18	GA5004437	WASHER 6mm FLAT SS	1
19	GA5003643	WASHER 8mm FLAT SS HD	6
20	GA5004919	WASHER 8mm SPRING SS	6

* Sub-assembly on following pages

Hopper Tank Lid Assembly

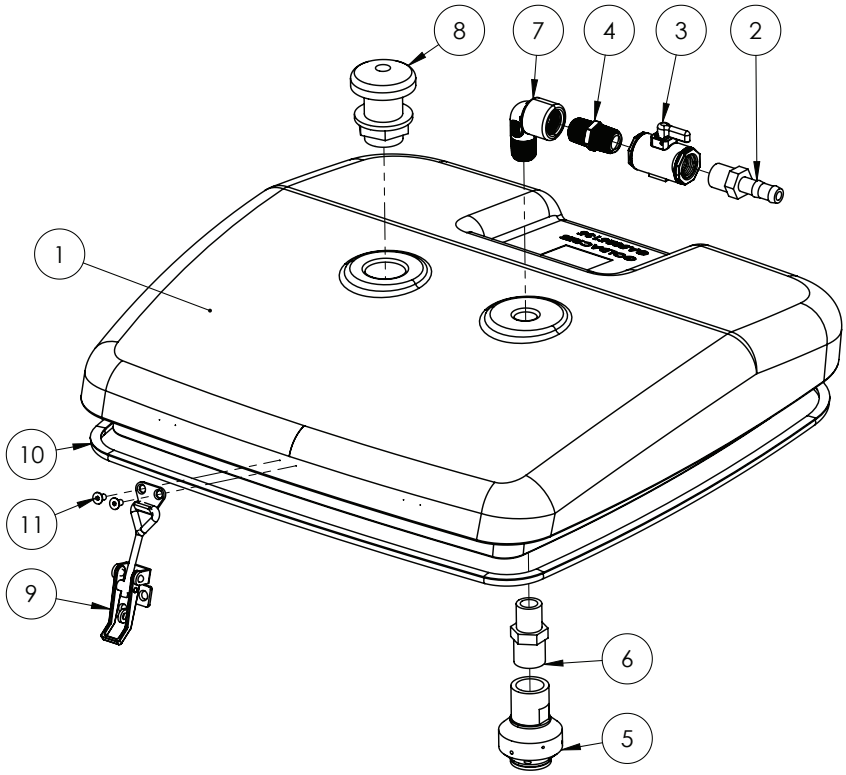

ITEM NO.	PART NUMBER	DESCRIPTION	QTY.
1	GA5025135	HOPPER, LID	1
2	GA5077702	HOSE BARB, STRAIGHT, 1/2" MALE THREAD X 1/2" HOSE	1
3	GA2000163	BALL VALVE, MICRO, 2 WAY, 1/2” NPT FEMALE THREADS	1
4	GA5077911	NIPPLE, SHORT, 1/2" MALE THREAD X 1/2" MALE THREAD	1
5	GA5077336	NOZZLE, TANK RINSING, 3/4" BSPT FEMALE INLET	1
6	GA5078087	NIPPLE, REDUCING, POLY, 3/4” X 1/2” MALE THREAD	1
7	GA5078133	STREET ELBOW, 90 DEGREE, 1/2" FEMALE THREAD X 1/2" MALE THREAD	1
8	GA5077045	BREATHER VALVE, LABYRINTH TYPE, 1” MALE THREAD	1
9	GA5007071	LATCH, ADJUSTABLE, INDUCTION HOPPER LID	1
10	GA5078553	SEAL, BULB, SELF ADHESIVE, 8.3MM X 9MM - CUT TO 1790 MM	1
11	GA0500101	CSCS M5 X 10 SS A2-70	2

Hopper Tank Hinges

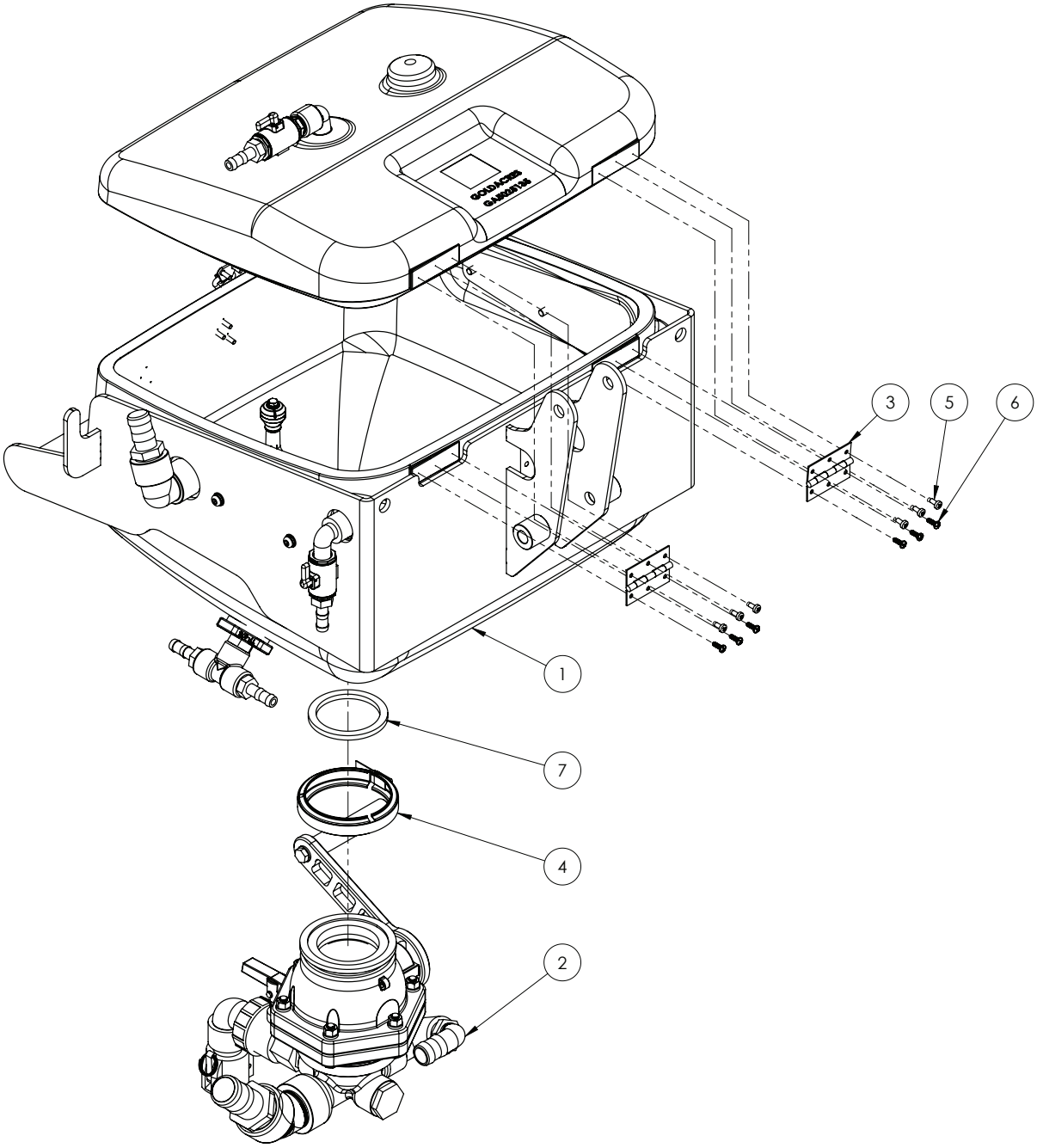

ITEM NO.	PART NUMBER	DESCRIPTION	QTY.
1	GA5025130	HOPPER, BODY	1
2	GA4949285*	BOTTOM VALVE ASSEMBLY	1
3	GA5006661	HINGE, BUTT, 70 LONG X 50 WIDE X 1.5 MM, SS	1
4	FC300	CLAMP, 3” FLANGE MANIFOLD, BANJO	1
5	GA0500099	BOLT PAN HEAD M5 X 10 SS A2-70	6
6	GA5014817	SCREW PAN HEAD 10G X 5/8" SS	6
7	GA5076723	SEAL, EPDM, SUIT 3" FLANGE FITTING	1

* Sub-assembly on following pages

Bottom Valve Assembly

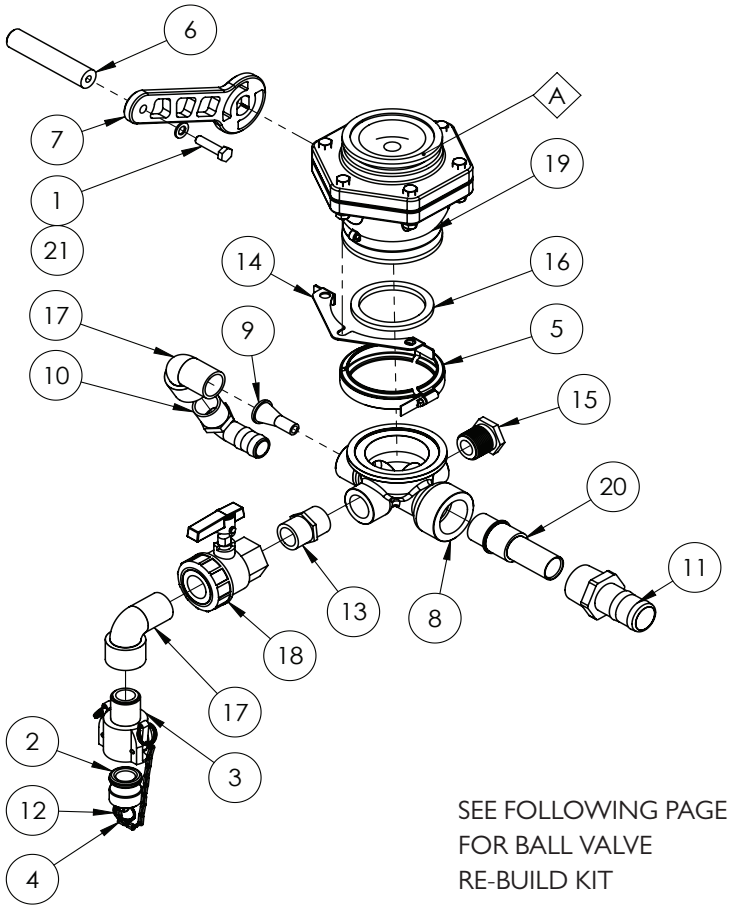

SEE FOLLOWING PAGE
FOR BALL VALVE
RE-BUILD KIT

ITEM NO.	PART NUMBER	DESCRIPTION	QTY.
A	GA2000301	REPAIR KIT, BALL VALVE 3", SUIT GA2000119, BANJO, VS35200	-
1	GA5006079	BOLT M10 X 40 SS A2-70	1
2	GA5076005	CAM LEVER, MALE PLUG, SUITS 1 & 1 1/4 COUPLINGS, BANJO	1
3	GA5076007	CAM LEVER, 1 FEMALE COUPLER, 1 MALE THREAD, BANJO	1
4	GA5001491	CHAIN 2 X 20 mm SS 316, 146102, CUT 150mm	0.15
5	FC300	CLAMP, 3" FLANGE MANIFOLD, BANJO	1
6	GA4551515	FOOT ACTIVATED HANDLE, HOPPER, G6 MY20	1
7	GA4406215	HANDLE, 3" BALL VALVE, HOPPER BOTTOM, G6 MY20	1
8	GA5078605	HOPPER BOTTOM, MOULDED	1
9	L057A	HOPPER JET TAPERED 9mm	1
10	GA5077723	HOSE BARB 90 DEGREE 1" BANJO	1
11	GA5077731	HOSE BARB, STRAIGHT, 1 1/2 MALE THREAD X 1 1/2 HOSE, BANJO	1
12	GA5002077	KEY RING, 25mm, SS	1
13	GA5077914	NIPPLE, SHORT, 1" MALE THREAD X 1" MALE THREAD, BANJO	1
14	GA4412695	PLATE, VALVE STOP, 3", STUBBY, BANJO, MVS300CFFP, HOPPER	1
15	GA5077945	PLUG, 1 MALE THREAD, BANJO	1
16	GA5076723	SEAL, EPDM, SUIT 3 FLANGE FITTING, BANJO	1
17	GA5078137	STREET ELBOW, 90 DEGREE, 1 MALE X 1 FEMALE, BANJO	2

Continued over page

Bottom Valve Assembly Continued

ITEM NO.	PART NUMBER	DESCRIPTION	QTY.
18	GA5078164	VALVE, BALL, 1 FEMALE THREAD INLET / OUTLET, FULL PORT, LEVER HANDLE, BANJO	1
19	GA4912900	VALVE, BALL, 3", BANJO, MVS300CFFP, DRILLED, SUIT HOPPER BOTTOM	1
20	GA4551895	VENTURI, HOPPER BOTTOM, DIA. 20mm	1
21	GA5000117	WASHER 10mm FLAT SS HD	1

Ball Valve Assembly

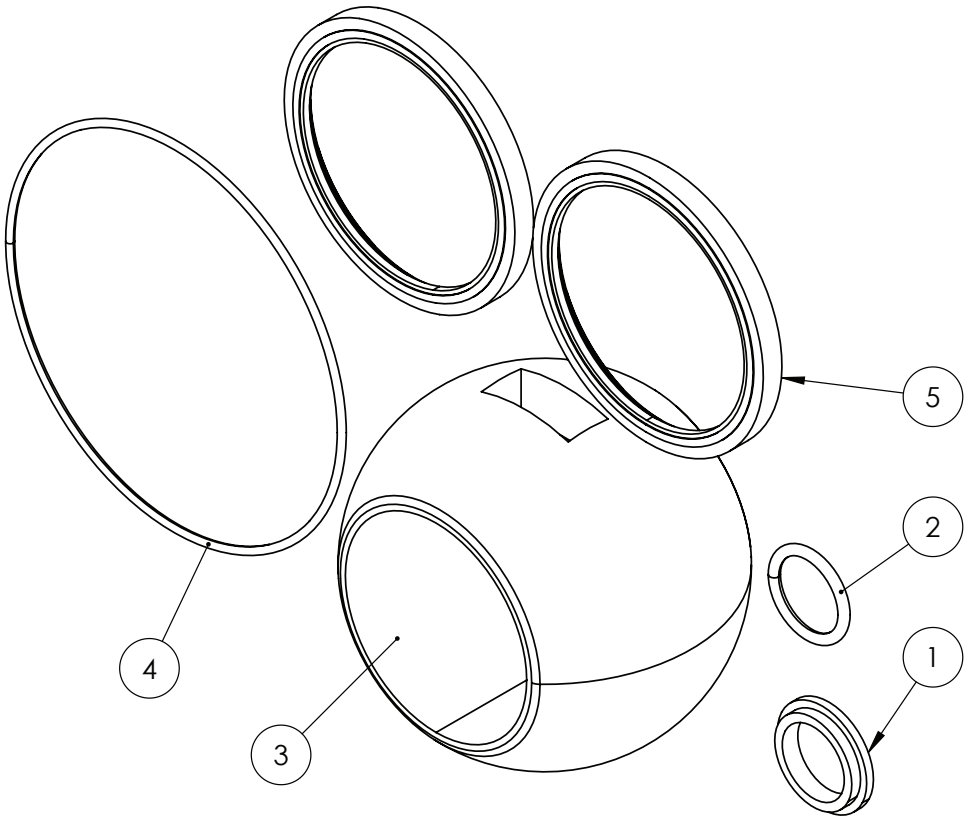

REPAIR KIT

PART NUMBER	DESCRIPTION
GA2000301	REPAIR KIT, BALL VALVE 3", SUIT GA2000119 - INLUDES ITEMS 1-5

ITEM NO.	PART NUMBER	DESCRIPTION	QTY.
1	GA2000302	STEM BUSHING, BALL VALVE 3", SUIT GA2000119	1
2	GA2000303	O-RING, SMALL, FKM, BALL VALVE 3", SUIT GA2000119	1
3	GA2000304	FULL PORT BALL, TUMBLED, BALL VALVE 3", SUIT GA2000119	1
4	GA2000305	O-RING, LARGE, FKM, BALL VALVE 3", SUIT GA2000119	1
5	GA2000306	STUBBY VALVE SEAT, BALL VALVE 3", SUIT GA2000119	2

Drum Rinse Nozzle Assembly

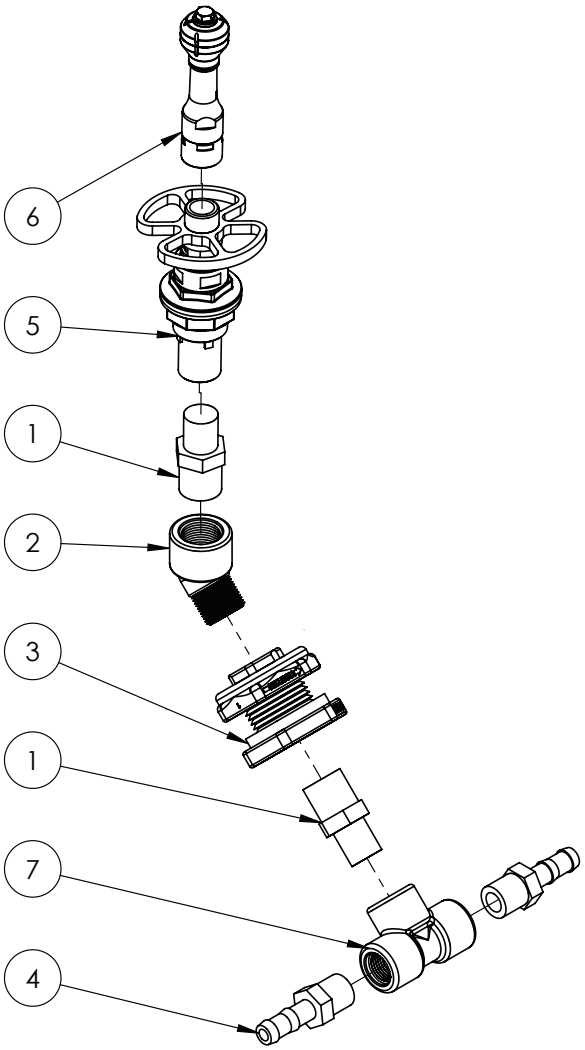

ITEM NO.	PART NUMBER	DESCRIPTION	QTY.
1	GA5078087	NIPPLE, REDUCING, POLY, 3/4" X 1/2" MALE THREAD	2
2	GA5078134	STREET ELBOW, 45 DEGREE, 3/4" MALE THREAD X 3/4" FEMALE THREAD	1
3	GA2000162	BULKHEAD FITTING, 3/4" NPT FEMALE THREADS	1
4	GA5077702	HOSE BARB, STRAIGHT, 1/2" MALE THREAD X 1/2" HOSE	2
5	GA5077062	VALVE, DRUM & CONTAINER RINSING NOZZLE	1
6	GA5077063	NOZZLE, DRUM & CONTAINER ROTATING RINSING JET	1
7	GA5078149	TEE, THREADED, 1/2" FEMALE	1

Chapter 9

FOAM MARKER TANK

Not Fitted

Chapter 10

TRANSCAL

Not Fitted

Chapter 11

MAIN TANK

Tank Assembly - 6000L

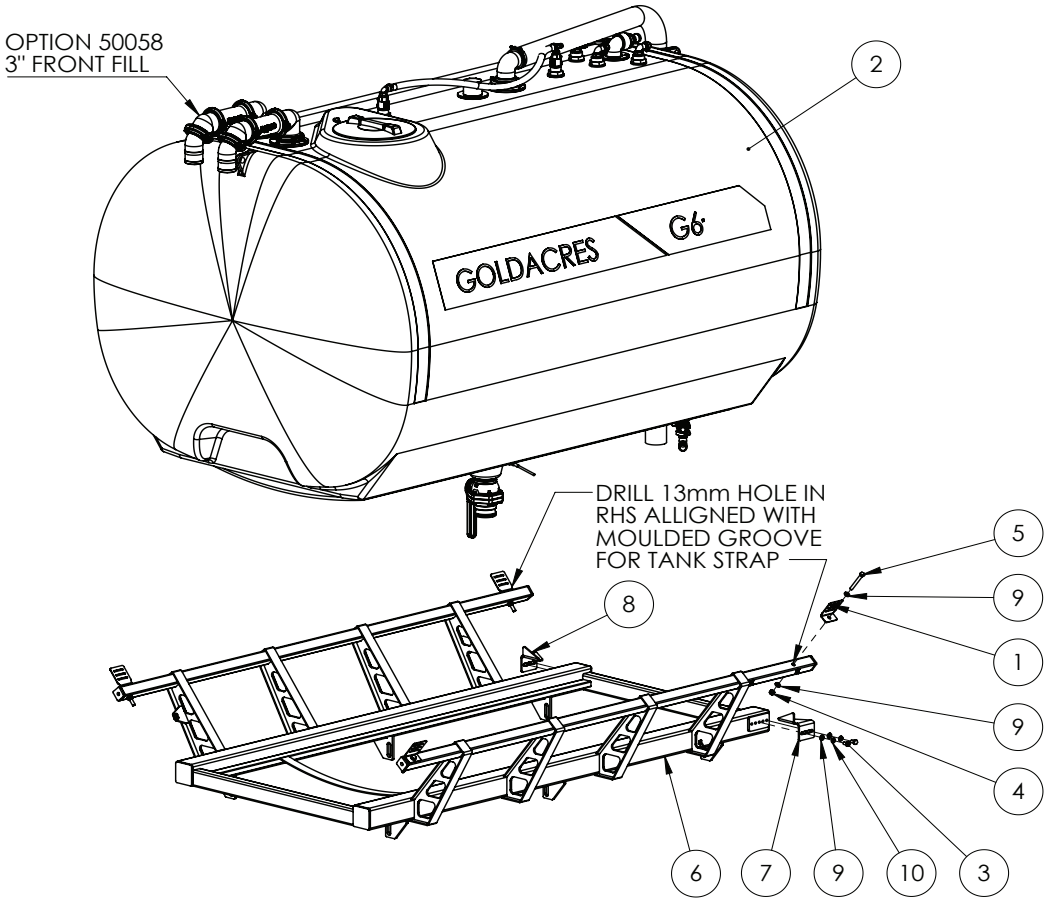

ITEM NO.	PART NUMBER	DESCRIPTION	QTY.
-	GA5003859	50MM TANK STRAP - CUT 4200MM LONG	2
1	F70127A	50mm TANK STRAP BRACKET	4
2	GA4949375	ASSEMBLY DRAWING ONLY. TANK ASSEMBLY, PRODUCT TANK, G6 MY20	1
3	GA5011227	BOLT M12 X 20 GR8.8 ZP	4
4	GA5012461	NUT M12 NYLOC ZP	4
5	GA5000261	SET SCREW M12 X 100 GR8.8 ZP	4
6	GA4602395	TANK CRADLE, G6, MY20	1
7	GA4509521	TANK STOP 5200L REAR LH	1
8	GA4509520	TANK STOP 5200L REAR RH	1
9	GA5000577	WASHER 12mm FLAT SS HD	12
10	GA5000575	WASHER 12mm SPRING SS	4

* Sub-assembly on following pages

Tank Assembly - 6000L

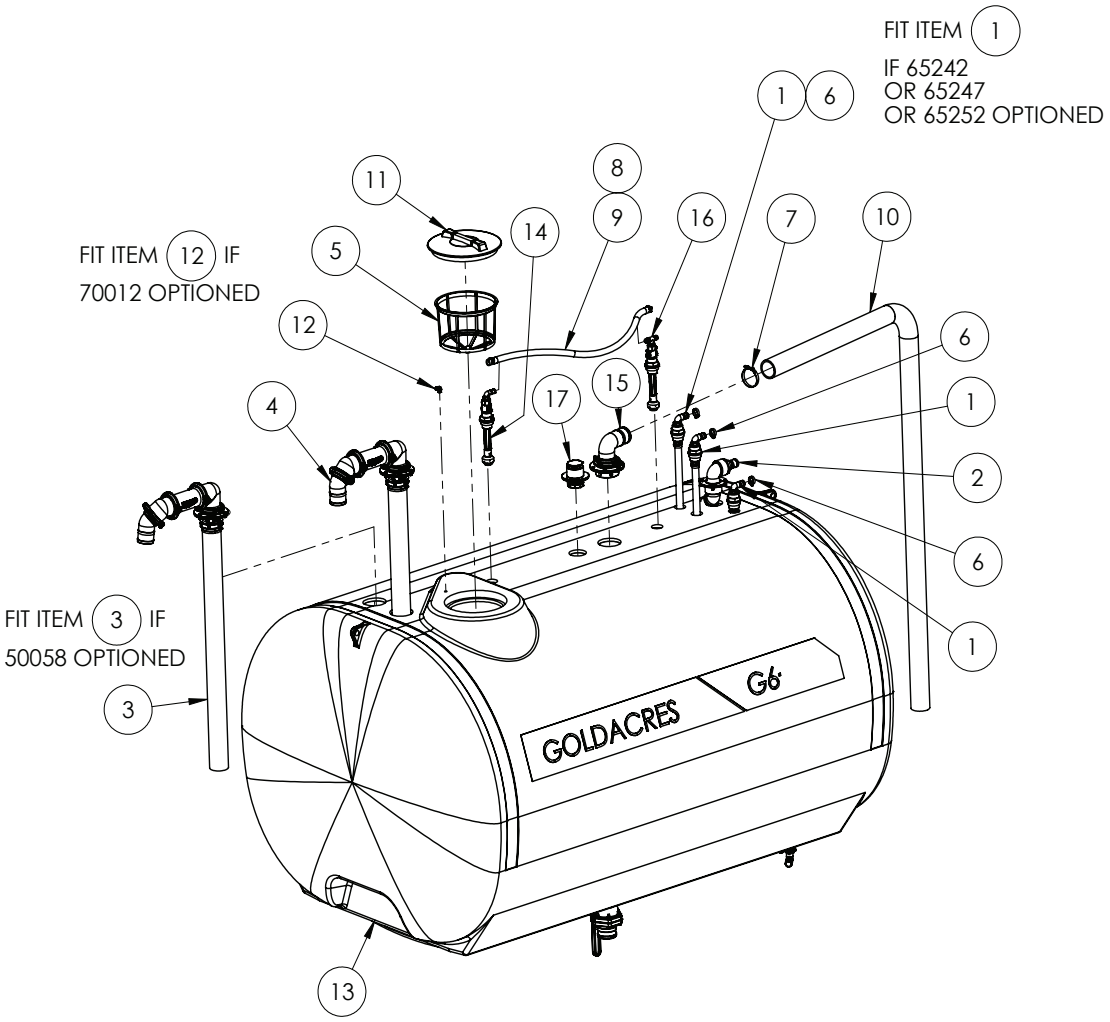

ITEM NO.	PART NUMBER	DESCRIPTION	QTY.
1	*	ASSEMBLY DRAWING ONLY, TANK, INLET, 1" HOSE	3
2	*	ASSEMBLY DRAWING ONLY, 2” INLET, HOPPER, 45°	1
3	*	ASSEMBLY DRAWING ONLY, 3” FILL ASSY, G6	1
4	*	ASSEMBLY DRAWING ONLY, 3” FILL ASSY, G6	1
5	GA5076714	FILTER, BASKET TYPE, DIAMETER 305 X 245 DEEP, SUIT MAIN SPRAY TANK	1
6	GA5001681	HOSE CLAMP, 1” SS (20-32/12W)	3
7	GA5010195	HOSE CLAMP, 3”, T BOLT, 3.25” TO 3.56”, LIGHT DUTY, DONALDSON	1
8	GA5000999	HOSE CLAMP, 3/4” SS (16-27/12W)	2
9	GA2000216	HOSE, PRESSURE, 20mm, BLACK 250PSI, HOS20P, SOLD PER METER	1.05
10	GA2000231	HOSE, SUCTION, PVC, 75mm, BLACK, HOS75PVC,SOLD PER METER	3.8
11	GA5076880	LID, BLACK, WITHOUT BREATHER, MEDIUM, DIAMETER 355, ARAG	1

Continued over page

Tank Assembly - 6000L

ITEM NO.	PART NUMBER	DESCRIPTION	QTY.
12	GA5052690	PNEUMATIC FITTING, ELBOW, 90 DEGREE, 1/4 BSP MALE X 8mm PUSH TYPE, METAL	1
13	GA5070915	TANK, 6000L SUIT CROP CRUISER	1
14	GA4901285-1	TANK, FLUSHING NOZZLE (ELBOW) CAM ADAPTOR	1
15	GA4907845	TANK, OVERFLOW, ASSEMBLY, 3”	1
16	GA4901285-2	TANK, RINSING NOZZLE, ASSEMBLY WITH TEE CAM ADAPTOR	1
17	GA4902820	VALVE, BREATHER, ASSEMBLY	1

* Sub-assembly on following pages

Continued over page

Tank Assembly - 6000L

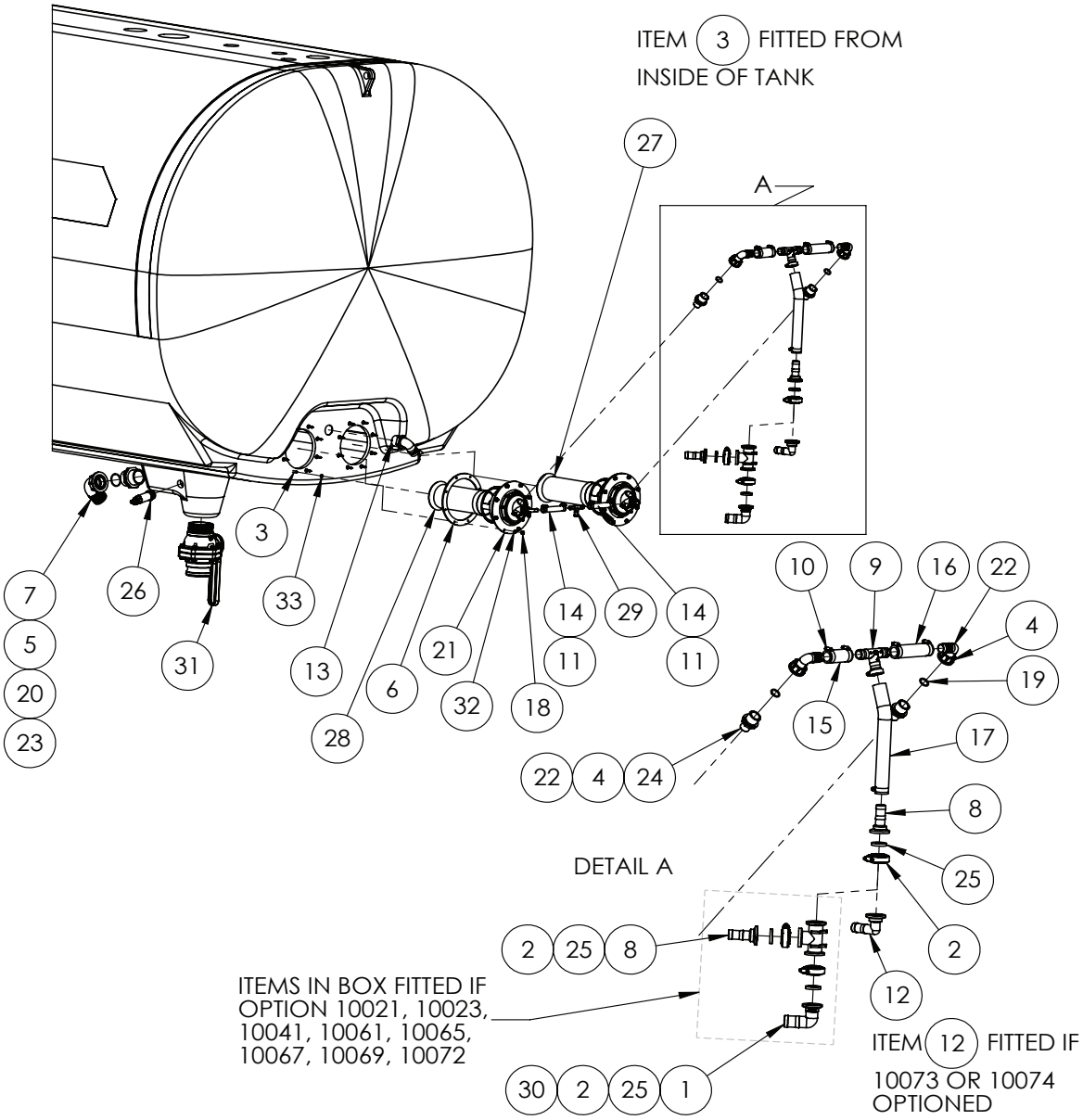

ITEM NO.	PART NUMBER	DESCRIPTION	QTY.
1	GA5077807	1" FLANGE X 1 1/4" BARB, ELBOW, 90 DEGREE, M100125BRB90	1
2	GA5077664	CLAMP, WORM SCREW, 1", BANJO	3
3	GA0500205	FANG BOLT M6 X 35 SS	16
4	GA5076602	FLY NUT, 1, ARAG, 2002040	2
5	GA5076605	FLY NUT, 2", ARAG, 2002070	1
6	GA5026440	GASKET, EPDM, SUPERMIX AGITATOR MOUNT, MY25	2
7	GA5076262	HOSE BARB, ELBOW, 90 DEGREE, 2" FLY NUT END X 52 mm HOSE, ARAG	1

Tank Assembly - 6000L

ITEM NO.	PART NUMBER	DESCRIPTION	QTY.
8	GA5077811	HOSE BARB, STRAIGHT, 1 FLANGE X 1 HOSE, BANJO	2
9	GA5077755	HOSE BARB, TEE, 1 HOSE, BANJO, HBT100	1
10	GA5001681	HOSE CLAMP, 1" SS (20-32/12W)	6
11	GA5000469	HOSE CLAMP, 1/2" SS 12-20/9W3	4
12	GA5077812	HOSE BARB, ELBOW, 90 DEGREE, 1 FLANGE X 1 HOSE, BANJO	1
13	GA5077730	HOSE BARB, ELBOW, 90 DEGREE, 1 1/4" MALE THREAD X 1 1/4" HOSE, BANJO	1
14	GA2000211	HOSE, PRESSURE, 12mm, BLACK, 250PSI, HOS13P, SOLD PER METER	1.9
15	GA2000219	HOSE, PRESSURE, 25mm, BLACK 250PSI, HOS25P, SOLD PER METER	0.08
16	GA2000219	HOSE, PRESSURE, 25mm, BLACK 250PSI, HOS25P, SOLD PER METER	0.13
17	GA2000219	HOSE, PRESSURE, 25mm, BLACK 250PSI, HOS25P,SOLD PER METER	.0375
18	GA5004429	NUT M6 NYLOC SS	16
19	GA5077675	O RING, 20.24 X 2.62, EPDM, G10041	2
20	GA5076097	O RING, 42.52 X 2.62, 110193	2
21	GA4000787	PLATE, SUPER MIX AGITATOR MOUNT, FLANGE BRACKET, ALL, MY25	2
22	GA5078296	PLUMBING FITTING, HOSE TAIL 1", ELBOW, 90 DEGREE, 25mm, SUIT FLY NUT, ARAG 116425	2
23	GA5078410	PLUMBING FITTING, NIPPLE, 2", ARAG, 2502070	1
24	GA5078324	REDUCER, MALE 1" TO MALE 3/4", ARAG, 2402043	2
25	GA5077818	SEAL, SUIT 1 MANIFOLD FITTING, RUBBER EPDM, BANJO, M100G	3
26	GA3001158	SENSOR, PRESSURE TRANSMITTER, 4-20MA, 1" M, 0 TO 0.4 BAR, M12, IFM PM1718	1
27	GA4908705	SUPER MIX AGITATOR ASSEMBLY, NO BYPASS FITTING.	1
28	GA4908705	SUPER MIX AGITATOR ASSEMBLY, NO BYPASS FITTING.	1
29	GA5077751	TEE, HOSE BARB, 1/2, BANJO, HBT050-050	1
30	GA5077823	TEE, 1 FLANGE X 1 FLANGE X 1 FLANGE, BANJO, M100TEE	1
31	GA5078204	VALVE, BALL, 3", MALE NPT, MALE CAM LOCK, STUBBLY, LONG HANDLE, BANJO, VSFMT300	1
32	GA5004437	WASHER M6 FLAT SS HD	16
33	GA5026590	WASHER M6 NEOPRENE	16

* Sub-assembly on following pages

Tank Rinsing Nozzle, Elbow - Assembly

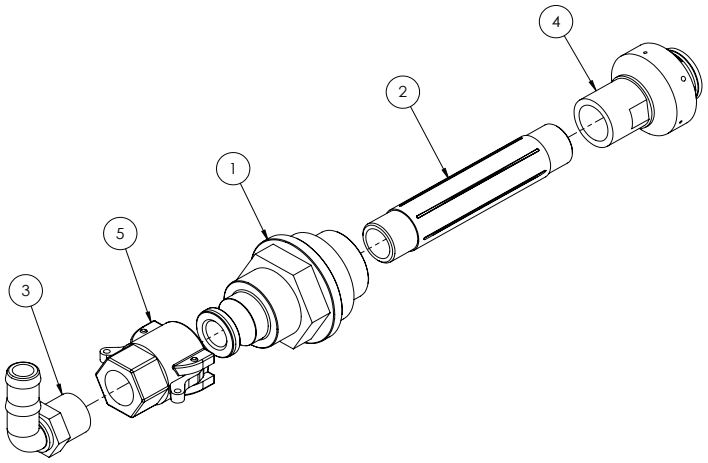

ITEM NO.	PART NUMBER	DESCRIPTION	QTY.
-	GA4901285-1	TANK RINSING NOZZLE, ELBOW, COMPLETE	-
1	GA4572015	TANK RINSE ADAPTOR WITH CAM LOCK	1
2	GA5077912	NIPPLE, 6” LONG, 3/4” MALE THREAD, BANJO	1
3	GA5077717	HOSE BARB, ELBOW, 90 DEGREE, 3/4” MALE THREAD X 3/4” HOSE, BANJO	1
4	GA5077336	NOZZLE, TANK RINSING, 3/4” BSPT FEMALE INLET, TEEJET	1
5	GA5077132	CAM LEVER, 3/4” FEMALE COUPLING X 3/4” HOSE BARB, BANJO	1

Tank Rinsing Nozzle, Tee - Assembly

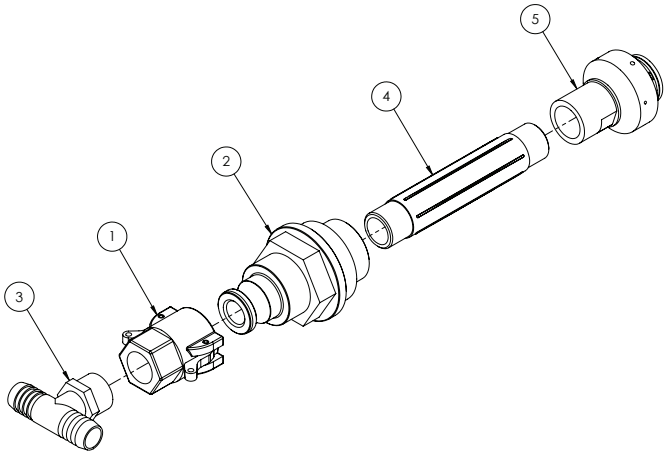

ITEM NO.	PART NUMBER	DESCRIPTION	QTY.
-	GA4901285-2	TANK RINSING NOZZLE, TEE, COMPLETE	-
1	GA5077132	CAM LEVER, 3/4” FEMALE COUPLING X 3/4” HOSE BARB, BANJO	1
2	GA4572015	TANK RINSE ADAPTOR WITH CAM LOCK	1
3	GA3500431	HOSE BARB, TEE, 3/4" HOSE BARB X 3/4" HOSE BARB X 3/4" MALE THREAD	1
4	GA5077912	NIPPLE, 6” LONG, 3/4” MALE THREAD, BANJO	1
5	GA5077336	NOZZLE, TANK RINSING, 3/4” BSPT FEMALE INLET, TEEJET	1

Outlet - Tank Overflow 3"

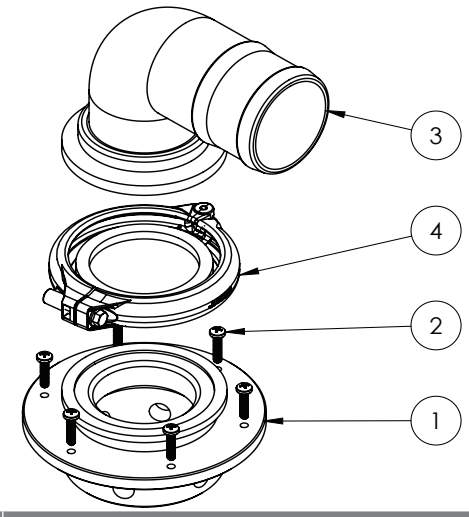

ITEM NO.	PART NUMBER	DESCRIPTION	QTY.
1	GA4550590	TANK TOP INLET FITTING, 3” FLANGE AND 3” NPT FEMALE THREAD	1
2	GA5000527	SCREW, PAN HEAD, 12G X 25MM, SS	6
3	GA5077875	HOSE BARB, ELBOW, 90 DEGREE, 3” FLANGE X 3” HOSE	1
4	GA2000116	FLANGE CLAMP, AND GASKET, 3”	1

Inlet - Tank, 1"

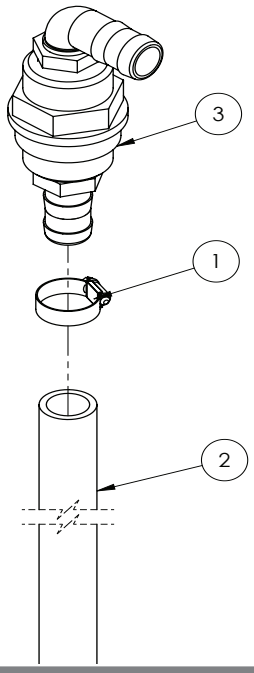

ITEM NO.	PART NUMBER	DESCRIPTION	QTY.
1	GA5001681	HOSE CLAMP, 1” SS (20-32/12W)	1
2	GA2000220	HOSE, SUCTION, PVC, 25mm, BLACK, HOS25PVC, SOLD PER METER	1.3
3	GA4922140	TANK, INLET, 1”, CHEMICAL FILL POINT	1

Inlet - Tank Fill 1" - Chemical Pump

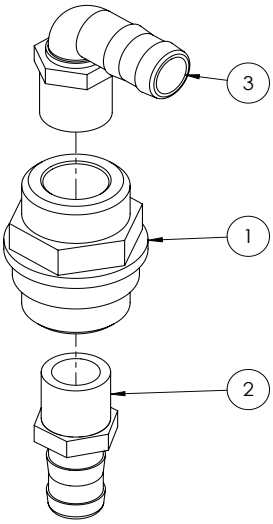

ITEM NO.	PART NUMBER	DESCRIPTION	QTY.
1	GA4572395	MAIN TANK LINE RETURN FITTING 1”	1
2	GA5077718	HOSE BARB, STRAIGHT, 1” MALE THREAD X 1” HOSE	1
3	GA5077723	HOSE BARB, ELBOW, 90 DEGREE, 1” MALE X 1” HOSE	1

Inlet - Hopper Tank 2"

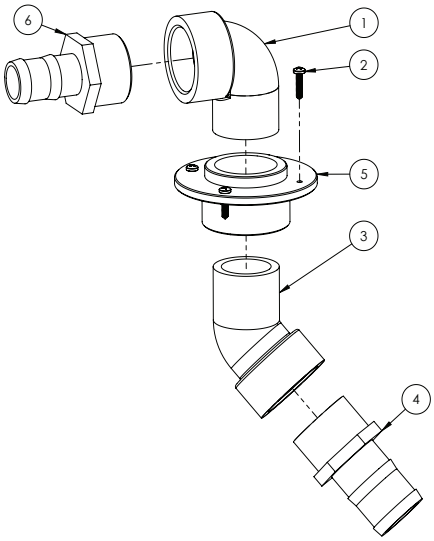

ITEM NO.	PART NUMBER	DESCRIPTION	QTY.
1	GA5078142	STREET ELBOW, 90 DEGREE, 2” MALE THREAD X 2” FEMALE THREAD, BANJO	1
2	GA5000527	SCREW, PAN HEAD, 12G X 25MM, SS	4
3	GA5078141	STREET ELBOW, 45 DEGREE, 2” MALE THREAD X 2” FEMALE THREAD, BANJO	1
4	GA5077737	HOSE BARB, STRAIGHT, 2” MALE THREAD X 2” HOSE, BANJO	1
5	GA4583370	THREADED TANK FLANGE 2”	1
6	GA5077739	HOSE BARB, STRAIGHT, 2” MALE THREAD X 1 1/2” HOSE, BANJO	1

3” Front Fill, Option (50058)

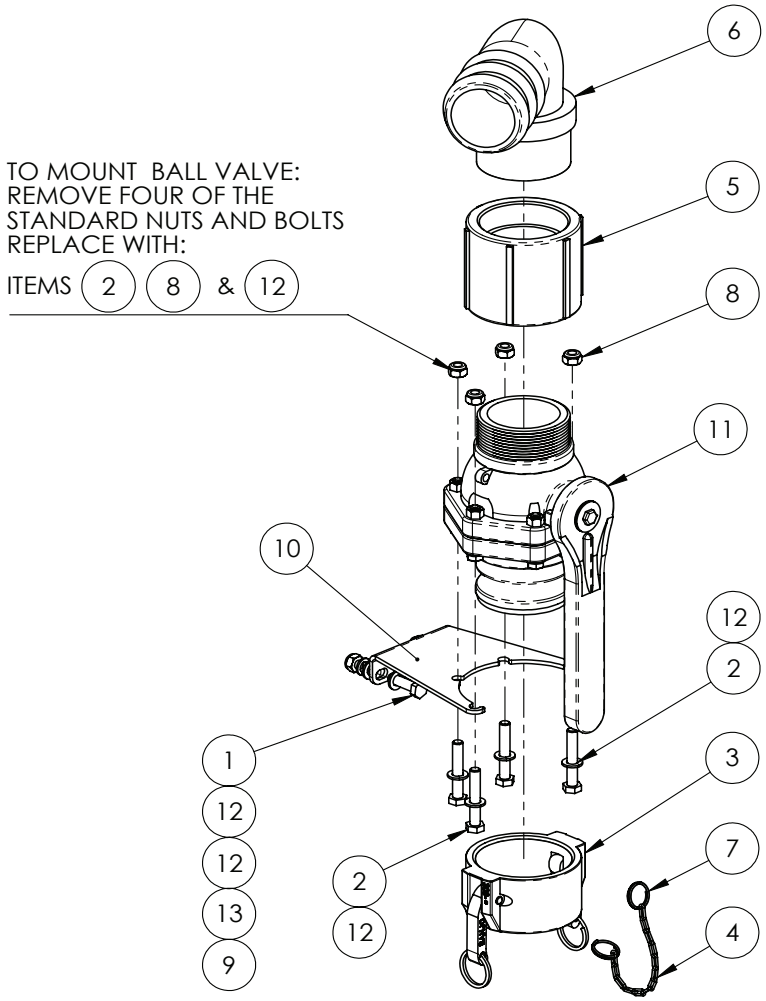

ITEM NO.	PART NUMBER	DESCRIPTION	QTY.
1	GA5006111	BOLT M10 X 35 GR8.8 ZP	2
2	GA5011175	BOLT M10 X 60 GR8.8 ZP	4
3	GA5076719	CAM LEVER, FEMALE CAP, 3”, BANJO, 300CAP	1
4	GA5001491	CHAIN 2 X 20 MM SS 316, 146102	0.15
5	GA5077642	COUPLING, SOCKET, 3” FEMALE THREAD, BANJO, CPLG300	1
6	GA5077742	HOSE BARB, ELBOW, 90 DEGREE, 3 MALE THREAD X 3 HOSE, BANJO, HB300-90	1
7	GA5002077	KEY RING, 25MM, SS	2
8	GA5051445	NUT M10 NYLOC SS	4
9	GA5000141	NUT M10 NYLOC ZP	2
10	GA4509400	PLATE, BALL VALVE MOUNT 3”, BANJO	1
11	GA5078204	VALVE, BALL, 3”, MALE NPT, MALE CAM LOCK, STUBBLY, LONG HANDLE, BANJO, VSFMT300	1
12	GA5000117	WASHER M10 FLAT SS HD	8
13	GA5000137	WASHER 10MM SPRING SS	2

Breather Valve Assembly

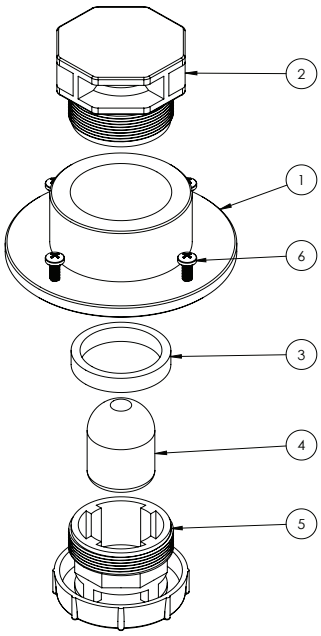

ITEM NO.	PART NUMBER	DESCRIPTION	QTY.
1	GA4583370	THREADED TANK FLANGE 2”	1
2	GA5077046	VALVE, BREATHER, SINGLE FLOATING BALL, 504210	1
3	GA4551975	SPACER, 56MM OD, 5MM WALL, 10MM UNIBOARD POLY	1
4	*	COMES WITH GA5077046	1
5	*	COMES WITH GA5077046	1
6	GA5000527	SCREW PAN HEAD 12G X 25MM SS	4

Tank Drain

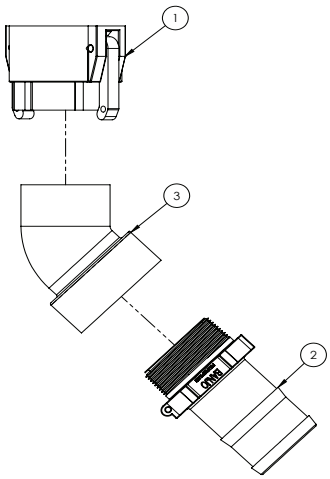

ITEM NO.	PART NUMBER	DESCRIPTION	QTY.
1	GA5076720	CAM LEVER, 3” EMAIL COUPLING X 3” FEMALE THREAD	1
2	GA5077741	HOSE BARB, STRAIGHT, 3 MALE THREAD X 3 HOSE, BANJO, HB300	1
3	GA5078143	STREET ELBOW, 45 DEGREE, 3 MALE X 3 FEMALE, BANJO, SL300-45	1

Supermix Agitator

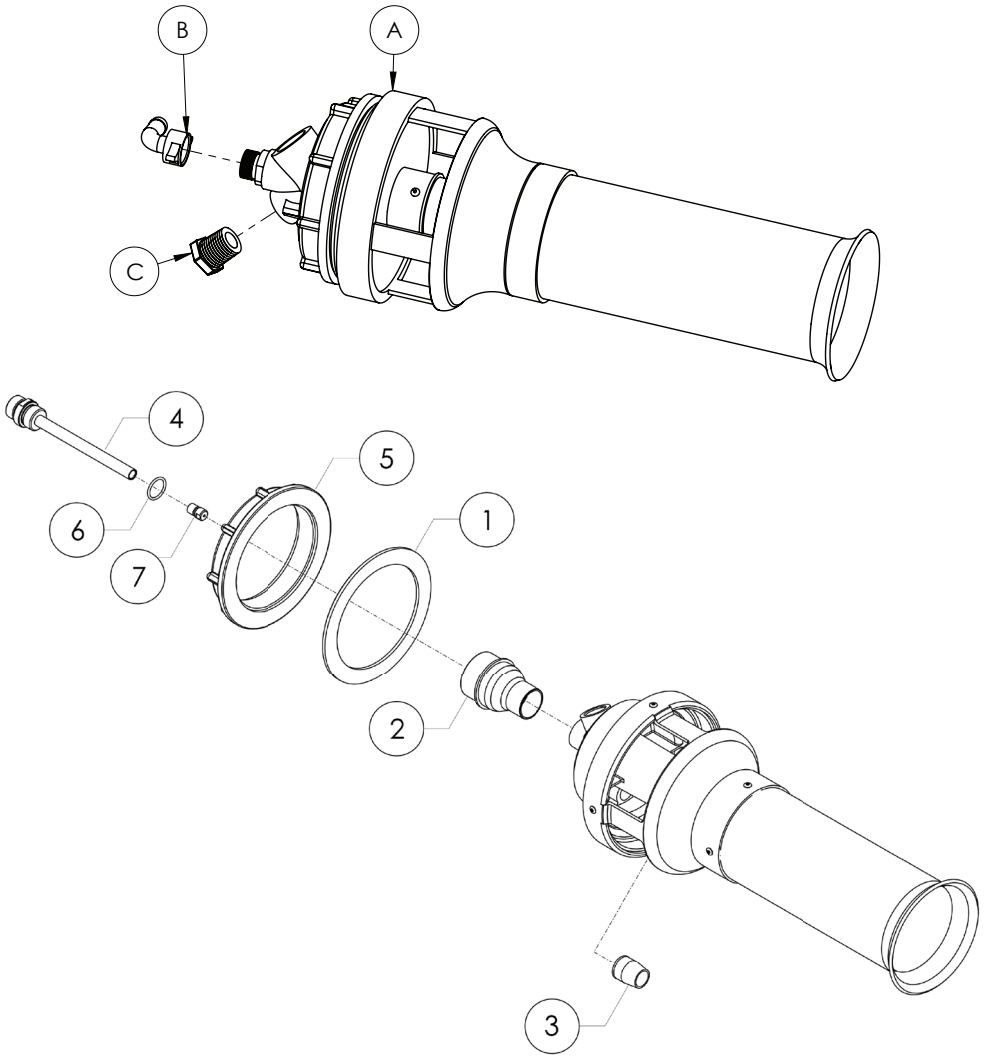

AGITATOR COMPLETE

PART NUMBER	DESCRIPTION
GA4908705	SUPER MIX AGITATOR ASSEMBLY, INC. PARTS A,B & C.

ITEM NO.	PART NUMBER	DESCRIPTION	QTY.
A	GA5077038	AGITATOR, SUPER MIX, 3MM JET	1
B	GA5075657	HOSE BARB, ELBOW, 90 DEGREE, 13MM HOSE, INCLUDING 1/2" FLY NUT AND SEAL, BRASS	1
C	GA5077943	PLUG, 1/2" MALE THREAD	1
1	GA5024555	GASKET, FLY NUT	1
2	GA2000295	NOZZLE, REDUCER, LOW PRESSURE	1
3	GA2000296	NOZZLE, LOW PRESSURE	1
4	GA2000297	HIGH PRESSURE INLET NIPPLE	1
5	GA2000298	FLY NUT	1
6	GA2000299	O-RING, 2.0 X 18.0 MM, EPDM	1
7	GA2000300	NOZZLE, HIGH PRESSURE	1

NOTE: Sikaflex 227 used when installing supermix agitator.

WHEELS & MUDGUARD

Mud Guards - Front Axle - 2WD - 380-520 Tyre

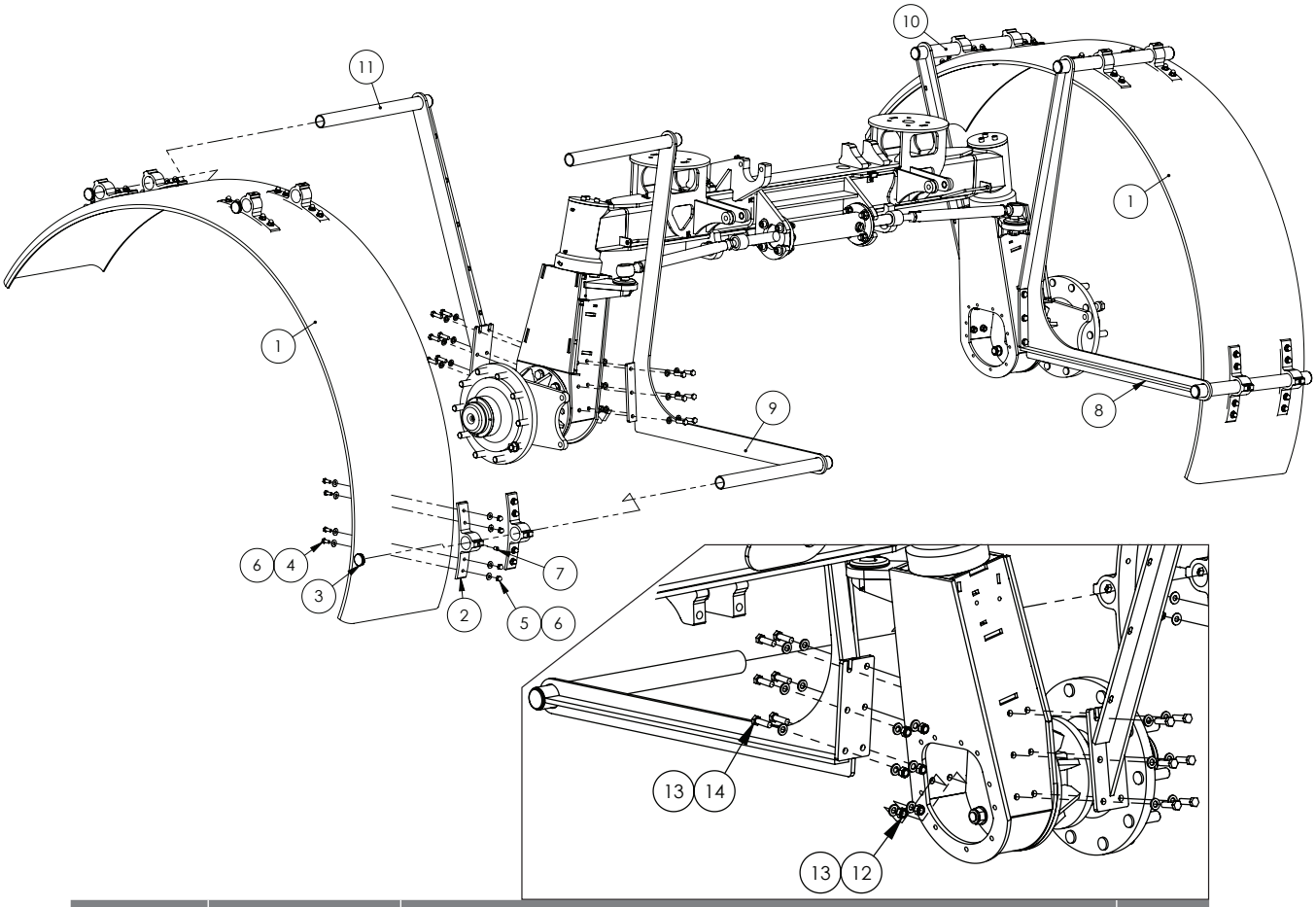

ITEM NO.	PART NUMBER	DESCRIPTION	QTY.
1	GA5003825	MUDGUARD, BLACK PLASTIC, 500 WIDE X 1000MM RADIUS	2
2	GA5020450	BRACKET, PLASTIC, BLACK, MUDGUARD MOUNTING, BK-P300BK1	12
3	GA5003925	END CAP, 45 MM ROUND, BLACK PLASTIC	12
4	GA5066162	BOLT M10 X 25 SS	48
5	GA5011133	NUT M10 DOME NUT SS	48
6	GA5002565	WASHER, 3/8" ID X 1" OD, FLAT SS	96
7	GA5050675	GRUB SCREW M12 X 16 SS	12
8	GA4602895	MUDGUARD BRACKET, FRONT DROPLEG RIGHT REAR	1
9	GA4602890	MUDGUARD BRACKET, FRONT DROPLEG LEFT REAR	1
10	GA4602885	MUDGUARD BRACKET, FRONT DROPLEG, RIGHT FRONT	1
11	GA4602880	MUDGUARD BRACKET, FRONT DROPLEG LEFT FRONT	1
12	GA5012461	NUT M12 NYLOC ZP	24
13	GA5000577	WASHER 12MM FLAT SS HD	48
14	GA5000319	SET SCREW M12 X 40 ZP GR8.8	24

Mud Guards - Front Axle - 4WD - 380-520 Tyre

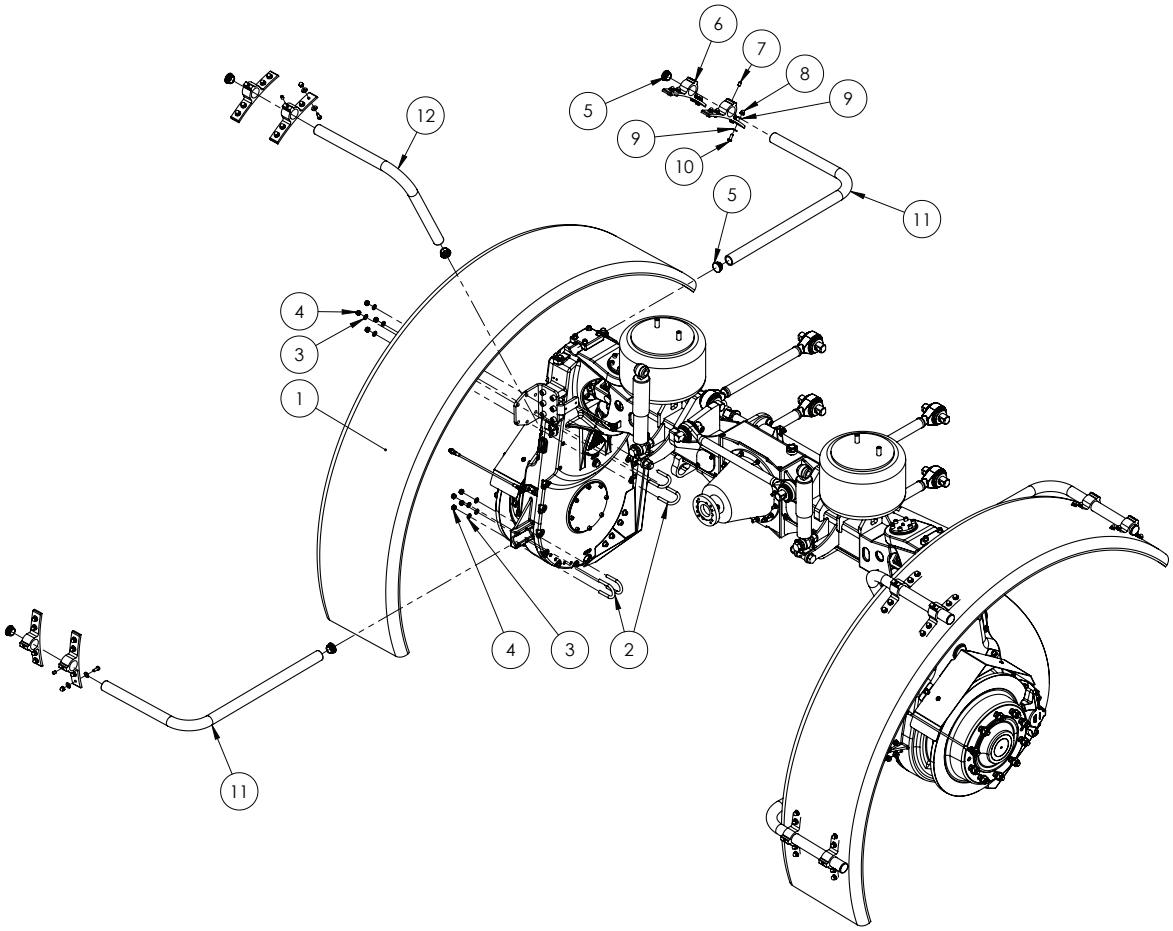

ITEM NO.	PART NUMBER	DESCRIPTION	QTY.
1	GA5003825	380-480 TYRE - MUDGUARD, BLACK PLASTIC, 500 WIDE X 1000 MM RADIUS	2
2	GA5071209	U BOLT M12 X 91L X 50W RT G/P	8
3	GA5000577	WASHER 12MM FLAT SS HD	16
4	GA5012461	NUT M12 NYLOC ZP	16
5	GA5003925	END CAP, 45 MM ROUND, BLACK PLASTIC	12
6	GA5020450	BRACKET, PLASTIC, BLACK, MUDGUARD MOUNTING	12
7	GA5050675	GRUB SCREW M12 X 16 SS	12
8	GA5011133	NUT M10 DOME NUT SS	48
9	GA5002565	WASHER 3/8" ID X 1" OD FLAT SS	96
10	GA5066162	BOLT M10 X 25 SS	48
11	GA5078567	PIPE, MUDGUARD MOUNT, FRONT 4WD DROPLEG, TOP AND REAR	4
12	GA5078568	PIPE, MUDGUARD MOUNT, FRONT 4WD DROPLEG, MIDDLE	2

Mud Guards - Rear Axle - 380-520 Tyre

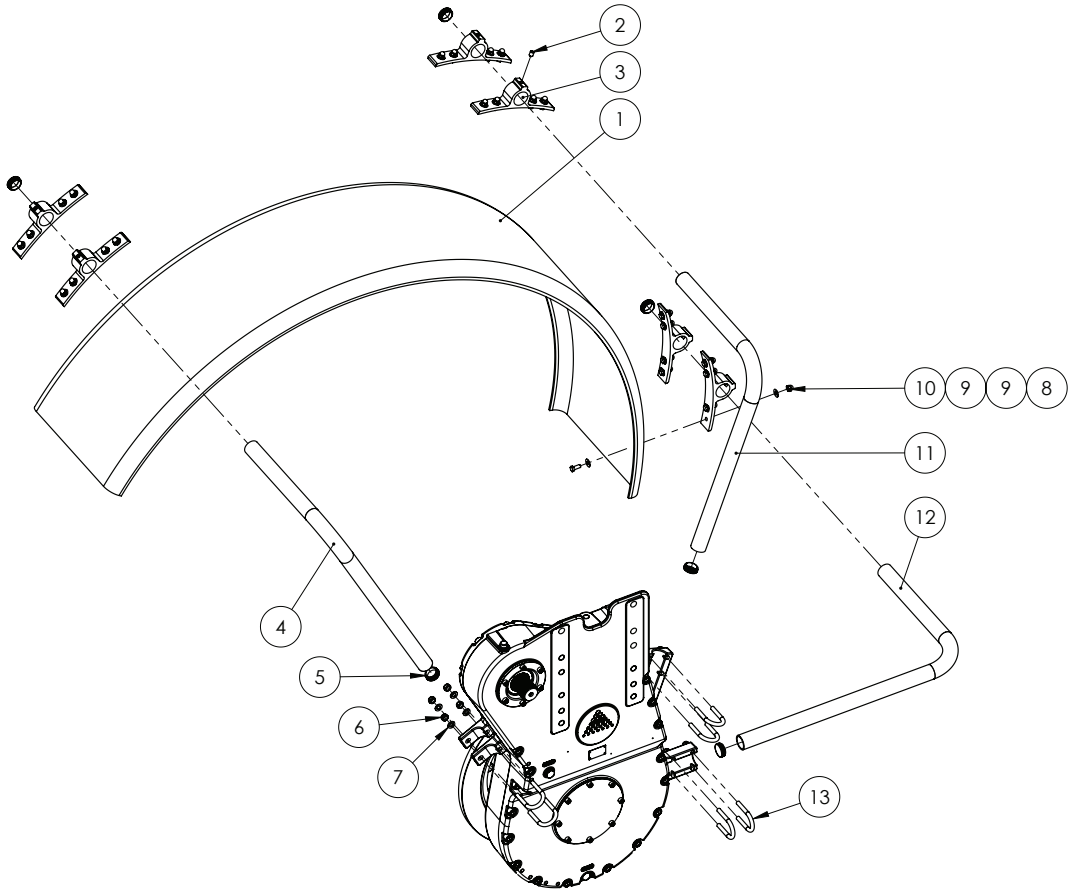

Quantities shown are per side.

ITEM NO.	PART NUMBER	DESCRIPTION	QTY.
1	GA5003825	380-520 TYRE - MUDGUARD, BLACK PLASTIC, 500 WIDE X 1000 MM RADIUS	1
2	GA5050675	GRUB SCREW M12 X 16 SS	6
3	GA5020450	BRACKET, PLASTIC, BLACK, MUDGUARD MOUNTING, BK-P300BK1	6
4	GA5072570	PIPE, MUDGUARD, REAR AXLE DROPLEG, FRONT	1
5	GA5003925	END CAP, 45 MM ROUND, BLACK PLASTIC	6
6	GA5012461	NUT M12 NYLOC ZP	12
7	GA5000577	WASHER 12MM FLAT SS HD	12
8	GA5066162	BOLT M10 X 25 SS	24
9	GA5002565	WASHER 3/8” ID X 1” OD FLAT SS	48
10	GA5011133	NUT M10 DOME NUT SS	24
11	GA5072575	PIPE, MUDGUARD, REAR AXLE DROPLEG, MIDDLE	1
12	GA5072580	PIPE, MUDGUARD, REAR AXLE DROPLEG, REAR	1
13	GA5071209	U BOLT, ROUND TOP, M12 X 91L X 50W	6

Crop Deflectors - Front Axle - 2WD

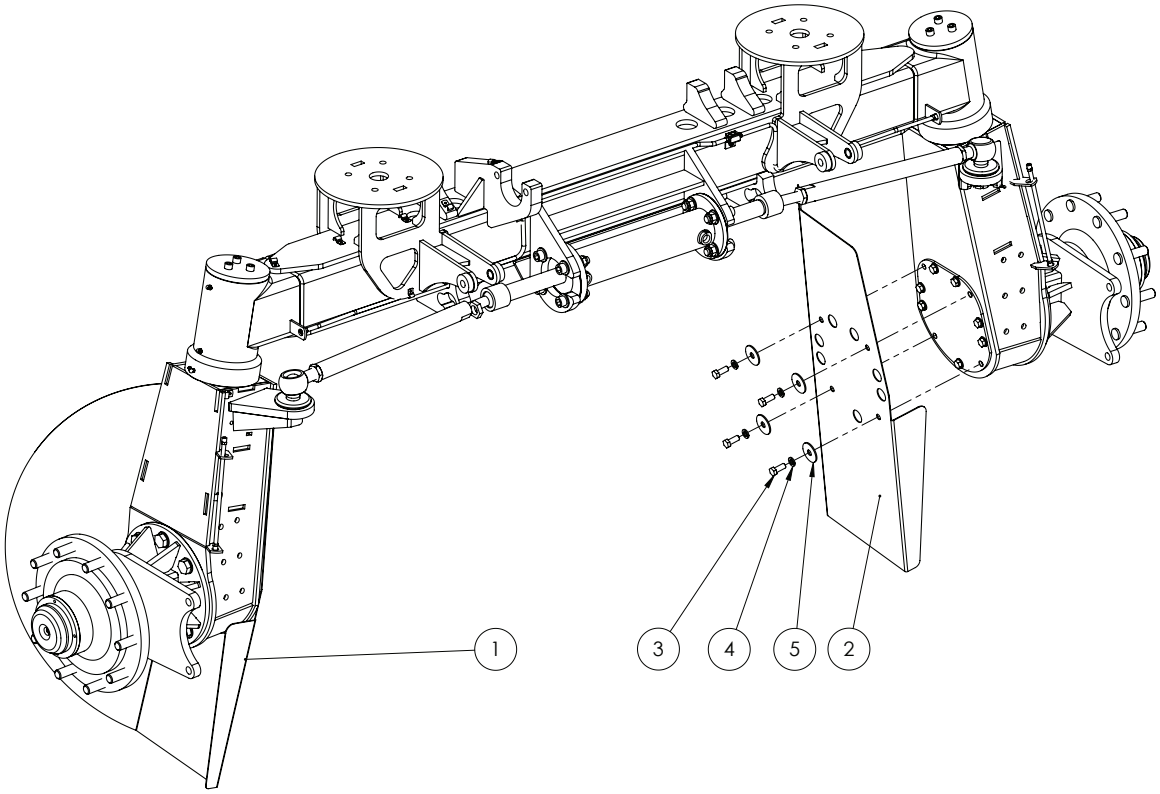

ITEM NO.	PART NUMBER	DESCRIPTION	QTY.
1	GA4503390	CROP DEFLECTOR, LH FRONT 2WD, CROP CRUISER	1
2	GA4503395	CROP DEFLECTOR, RH FRONT 2WD, CROP CRUISER	1
3	GA5000305	SET SCREW M12 X 30 GR8.8 ZP	8
4	GA5000575	WASHER 12MM SPRING SS	8
5	GA4535345	WASHER, 50MM OD X 14.5MM ID, SS	8

Crop Deflectors - Front Axle - 4WD

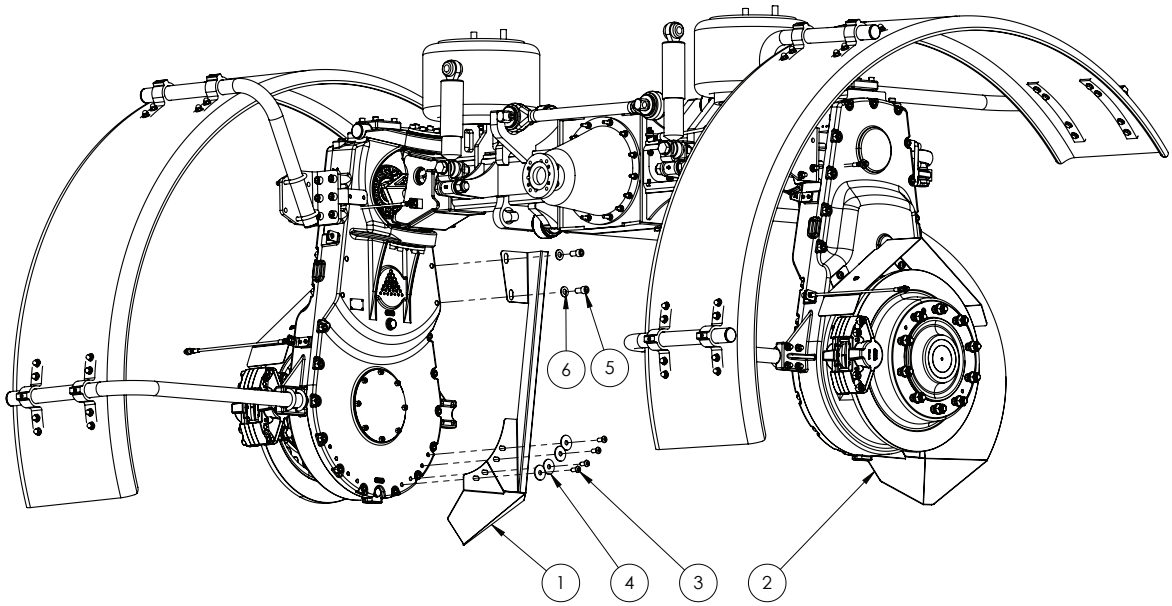

ITEM NO.	PART NUMBER	DESCRIPTION	QTY.
1	GA4406565	PLATE, CROP DEFLECTOR, FRONT 4WD DROP LEG, LH	1
2	GA4406570	PLATE, CROP DEFLECTOR, FRONT 4WD DROP LEG, RH	1
3	GA5000291	BHCS M12 X 25 SS A2-70	8
4	GA4535345	WASHER, 50 OD X 14.5 ID, SS	8
5	GA5000915	SHCS M16 X 30 GR12.9 ZP	4
6	GA5001043	WASHER 16MM FLAT SS HD	4

Crop Deflectors - Rear Axle - 2WD & 4WD

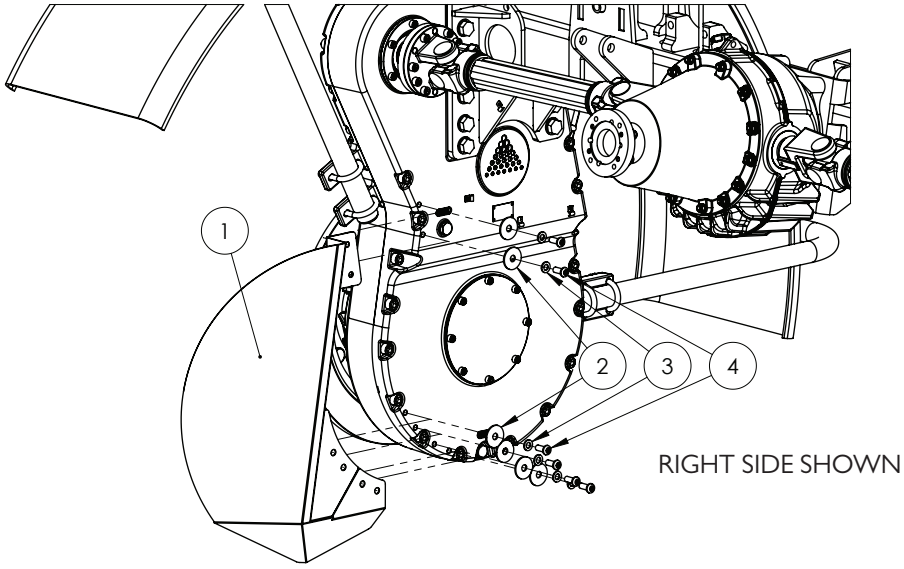

ITEM NO.	PART NUMBER	DESCRIPTION	QTY.
1	GA4401535	CROP DEFLECTOR, REAR, LH	1
	GA4401540	CROP DEFLECTOR, REAR, RH	1
2	GA4535345	WASHER, 50 OD X 14.5MM ID, SS	12
3	GA5000577	WASHER 12MM FLAT SS HD	12
4	GA5051530	BHCS M12 X 30 SS A2-70	12

Crop Dividers, Front, 2WD, G6, MY11 On

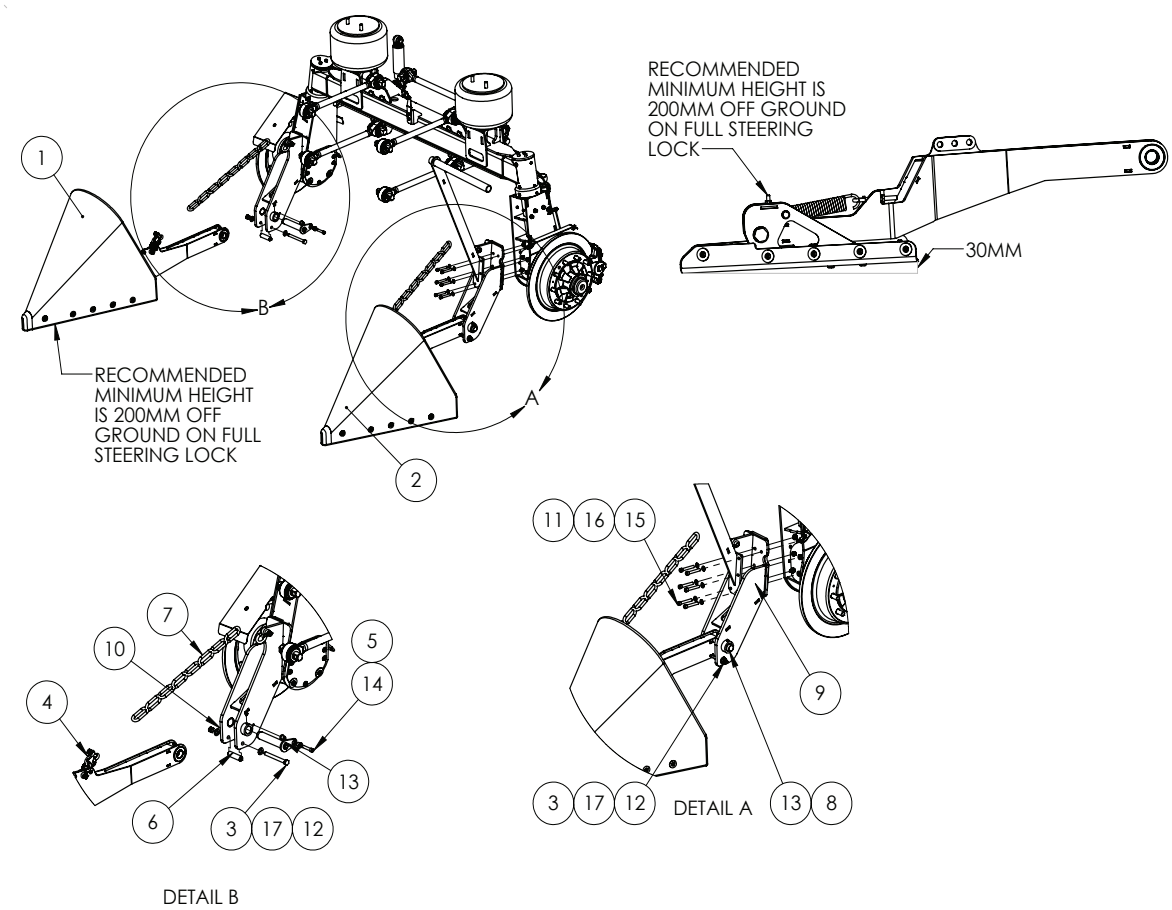

ITEM NO.	PART NUMBER	DESCRIPTION	QTY.
1	GA4949705	ASSEMBLY, NOSE CONE, CROP DIVIDER, RIGHT, MY11 ONWARD	1
2	GA4949700	ASSEMBLY, NOSE CONE, CROP DIVIDER, LEFT, MY11 ONWARD	1
3	GA5000871	BOLT M16 X 160 GR8.8 ZP	2
4	GA5075230	BOW SHACKLE 13MM WLL 3.25T BLACK	6
5	MACH0152	BUSH WITH SHOULDER, 12.3 ID X 25 OD X 21 LONG, SUIT PARALIFT PIN BOLTS	4
6	GA4551435	BUSH, CRUSH TUBE, 25OD X 17ID X 90LG, CROP DIVIDER, MY17	2
7	GA5065030	CHAIN, LONG LINK, 13MM THICK, GR 80, PAINT BLACK	2.4
8	GA5050450	GREASE NIPPLE, 6MM	4
9	GA4603455	MOUNT, CROP DIVIDER MOUNT, FRONT LEFT, 2WD, MY21	1
10	GA4603450	MOUNT, CROP DIVIDER MOUNT, FRONT RIGHT, 2WD, MY21	1
11	GA5012461	NUT M12 NYLOC ZP	12
12	GA5001029	NUT M16 NYLOC ZP	2
13	GA4603500	PIN, CROP DIVIDER, ARM PIVOT WITH LOCKING PLATE, 1.5” OD, MY21	2
14	GA0500020	SHCS M12 X 60, ZP, GR 12.9	2
15	GA5000353	SHCS M12 X 80 GR12.9 ZP	12
16	GA5000577	WASHER 12MM FLAT SS HD	24
17	GA5001043	WASHER 16MM FLAT SS HD	4

Crop Dividers, Front, 4WD, G6 MY20

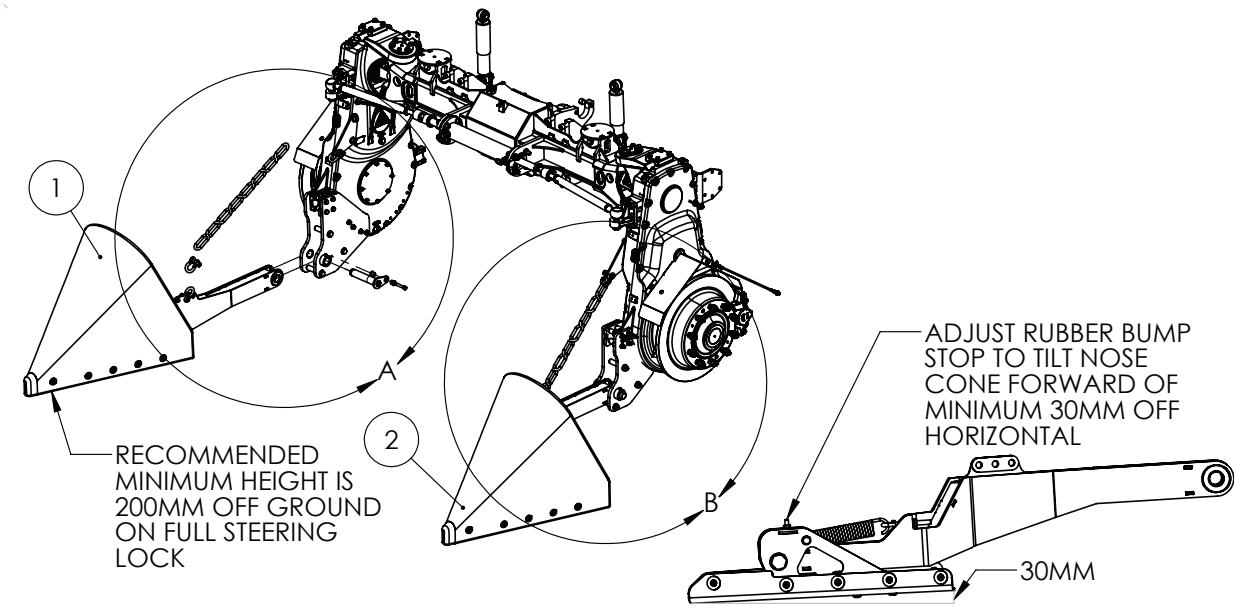

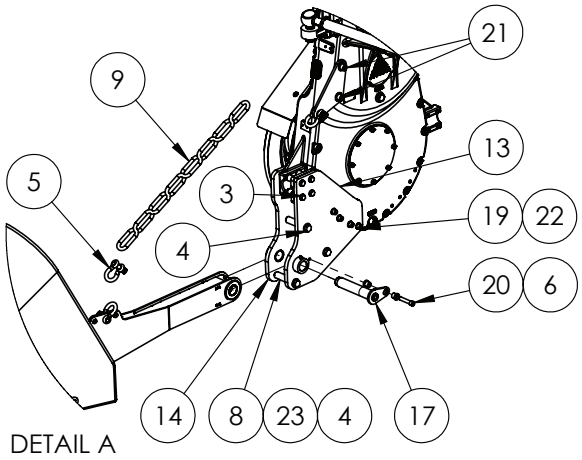

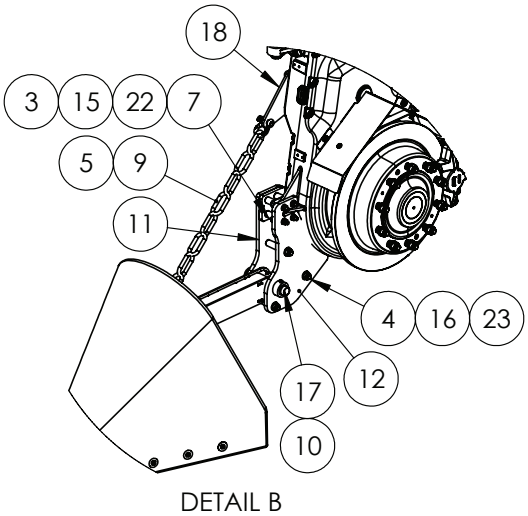

Continued over page

Crop Dividers, Front, 4WD, G6 MY20

ITEM NO.	PART NUMBER	DESCRIPTION	QTY.
1	GA4949705	ASSEMBLY, NOSE CONE, CROP DIVIDER, RIGHT, MY11 ONWARD	1
2	GA4949700	ASSEMBLY, NOSE CONE, CROP DIVIDER, LEFT, MY11 ONWARD	1
3	GA5000275	BOLT M12 X 150 GR8.8 ZP	8
4	GA5000869	BOLT M16 X 150 GR8.8 ZP	6
5	GA5075230	BOW SHACKLE 13MM WLL 3.25T BLACK	6
6	MACH0152	BUSH WITH SHOULDER, 12.3 ID X 25 OD X 21 LONG, SUIT PARALIFT PIN BOLTS	4
7	GA4551440	BUSH, CRUSH TUBE, 25OD X 13ID X 40LG, CROP DIVIDER, MY17	8
8	GA4551435	BUSH, CRUSH TUBE, 25OD X 17ID X 90LG, CROP DIVIDER, MY17	6
9	GA5065030	CHAIN, LONG LINK, 13MM THICK, GR 80, PAINT BLACK	2.4
10	GA5050450	GREASE NIPPLE, 6MM	4
11	GA4603475	MOUNT, CROP DIVIDER, FRONT LEFT, INNER, 4WD, MY21	1
12	GA4603465	MOUNT, CROP DIVIDER, FRONT LEFT, OUTER, 4WD, MY21	1
13	GA4603470	MOUNT, CROP DIVIDER, FRONT RIGHT, INNER, 4WD, MY21	1
14	GA4603460	MOUNT, CROP DIVIDER, FRONT RIGHT, OUTER, 4WD, MY21	1
15	GA5012461	NUT M12 NYLOC ZP	8
16	GA5001029	NUT M16 NYLOC ZP	6
17	GA4603500	PIN, CROP DIVIDER, ARM PIVOT WITH LOCKING PLATE, 1.5” OD, MY21	2
18	GA4407670	PLATE, CHAIN MOUNT, CROP DIVIDER, FRONT, 4WD, MY20	2
19	GA5051470	SHCS M12 X 50 GR12.9 ZP	8
20	GA0500020	SHCS M12 X 60, ZP, GR 12.9	2
21	GA5000925	SHCS M16 X 40 GR12.9 ZP	4
22	GA5000577	WASHER 12MM FLAT SS HD	24
23	GA5001043	WASHER 16MM FLAT SS HD	16

Crop Dividers, Rear, G6, MY17 On

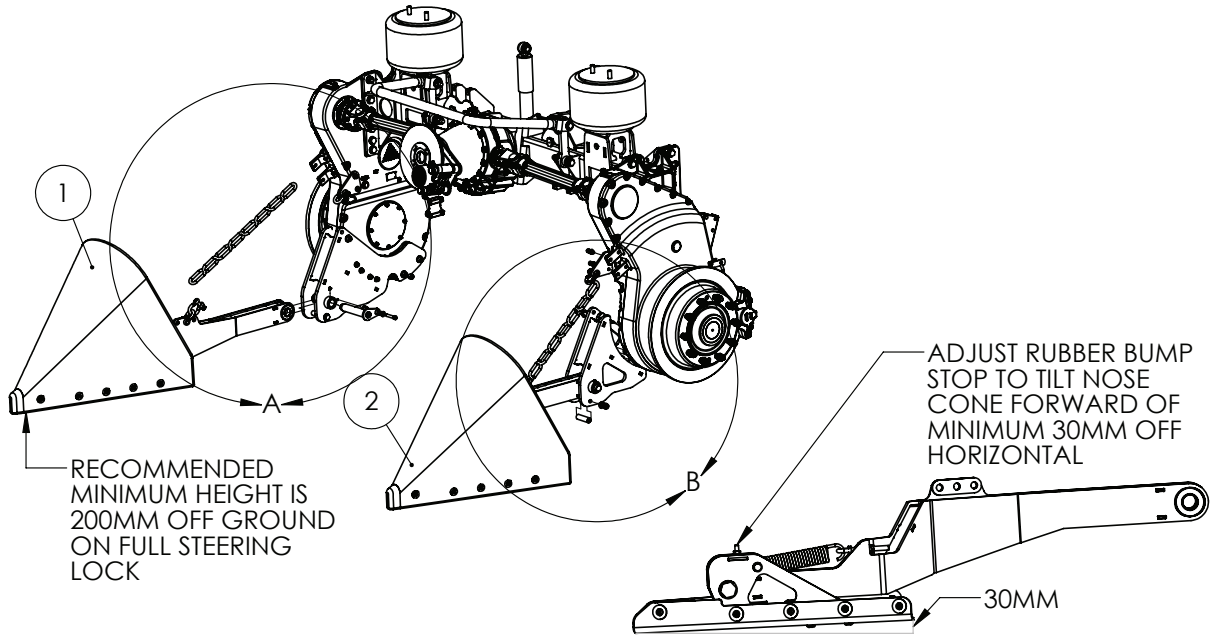

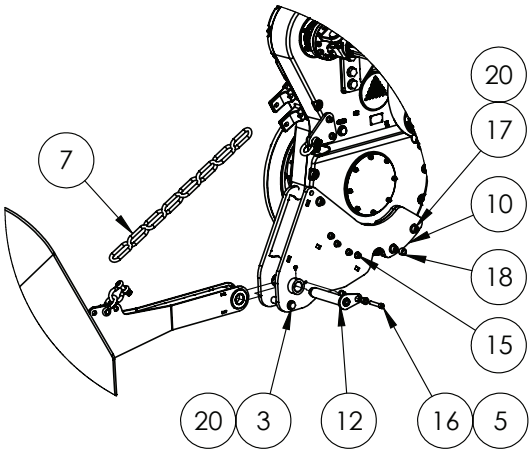

DETAIL A

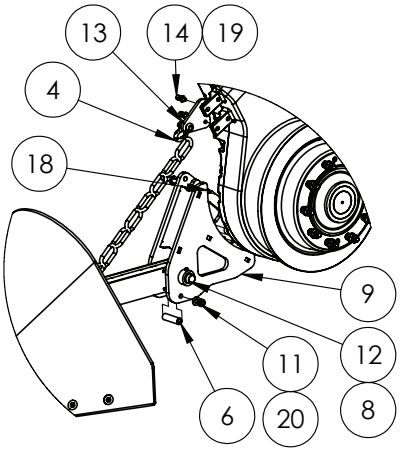

DETAIL B

ITEM NO.	PART NUMBER	DESCRIPTION	QTY.
1	GA4949705	ASSEMBLY, NOSE CONE, CROP DIVIDER, RIGHT, MY11 ONWARD	1
2	GA4949700	ASSEMBLY, NOSE CONE, CROP DIVIDER, LEFT, MY11 ONWARD	1
3	GA5000869	BOLT M16 X 150 GR8.8 ZP	2
4	GA5075230	BOW SHACKLE 13MM WLL 3.25T BLACK	6
5	MACH0152	BUSH WITH SHOULDER, 12.3 ID X 25 OD X 21 LONG, SUIT PARALIFT PIN BOLTS	4
6	GA4551435	BUSH, CRUSH TUBE, 25OD X 17ID X 90LG, CROP DIVIDER, MY17	2
7	GA5065030	CHAIN, LONG LINK, 13MM THICK, GR 80, PAINT BLACK	2.4
8	GA5050450	GREASE NIPPLE, 6MM	4

Continued over page

Crop Dividers, Rear, G6, MY17 On

ITEM NO.	PART NUMBER	DESCRIPTION	QTY.
9	GA4603485	MOUNT, CROP DIVIDER, REAR LEFT, 4WD, MY21	1
10	GA4603480	MOUNT, CROP DIVIDER, REAR RIGHT, 4WD, MY21	1
11	GA5001029	NUT M16 NYLOC ZP	2
12	GA4603500	PIN, CROP DIVIDER, ARM PIVOT WITH LOCKING PLATE, 1.5” OD, MY21	2
13	GA4407590	PLATE, CHAIN MOUNT, CROP DIVIDER, REAR, MY17	2
14	GA5000313	SHCS M12 X 35 GR12.9 ZP	4
15	GA5051470	SHCS M12 X 50 GR12.9 ZP	8
16	GA0500020	SHCS M12 X 60, ZP, GR 12.9	2
17	GA0500017	SHCS M16 X 100 GR12.9 ZP	6
18	GA4551175	SPACER, 17MM ID X 24MM OD X 17MM, CROP DIVIDER MOUNT	6
19	GA5000577	WASHER 12MM FLAT SS HD	12
20	GA5001043	WASHER 16MM FLAT SS HD	10

Crop Dividers, Nose Cone Assembly

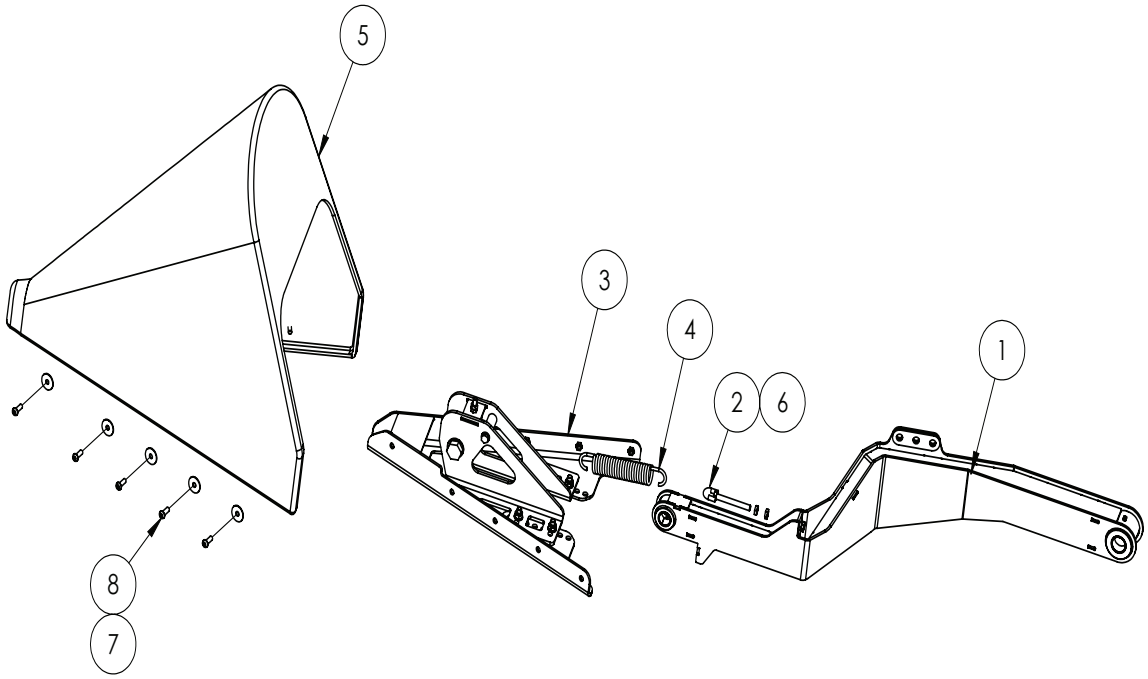

ITEM NO.	PART NUMBER	DESCRIPTION	QTY.
1	GA4602565	LEFT ARM, CROP DIVIDER, MY19	1
2	GA5075150	EYE BOLT 12MM X 100MM SHORT	1
3	GA4949675	NOSE CONE FRAME, CROP DIVIDER	1
4	GA5006345	SPRING, TENSION, 45 OD X 260 LONG X 7MM, 120H, SMALL BOOM.	1
5	GA5073735	NOSE CONE, CROP DIVIDER, MY19	1
6	GA5071280	NUT, M12 HALF LOCK NUT, ZP	4
7	GA5002595	WASHER 3/8 X 1 1/2 FLAT SS	10
8	GA5048120	BHCS M10 X 30 SS A2-70	10

Tyres & Rims

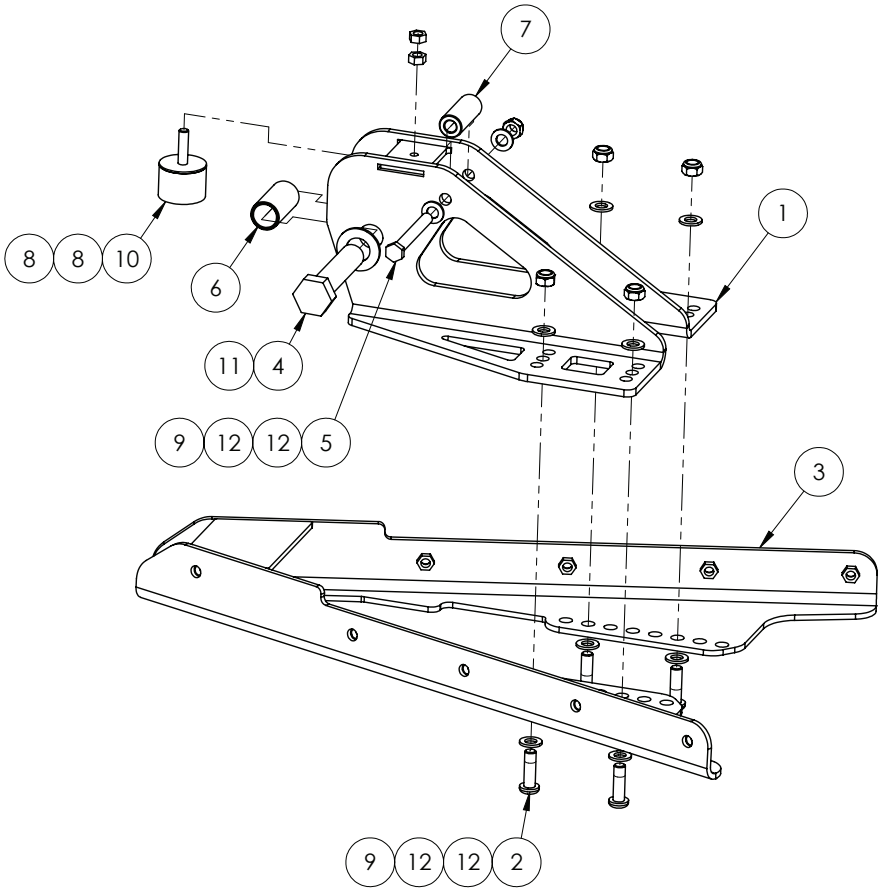

ITEM NO.	PART NUMBER	DESCRIPTION	QTY.
1	GA4602530	ADJUSTER, CROP DIVIDER, MY19	1
2	GA0500079	BHCS M12 X 40 GR12.9 ZP & BAKE CR3	4
3	GA4602525	BASE, CROP DIVIDER, MY19	1
4	GA5006149	BOLT 1 UNC X 4 1/2 GR8 ZP	1
5	GA5000259	BOLT M12 X 100 GR8.8 ZP	1
6	GA4551350	BUSH CRUSH TUBE, CROP DIVIDER, MY19	1
7	GA4551355	BUSH, SPRING END, CROP DIVIDER, MY19	1
8	GA5012459	NUT M10 HEX ZP	2
9	GA5012461	NUT M12 NYLOC ZP	5
10	GA5052815	RUBBER STOPPER, DIAMETER 50 X 35 LONG, WITH M10 X 35 STUD	1
11	GA5001893	WASHER 1 X 1 7/8 FLAT ZINC	1
12	GA5000577	WASHER M12 FLAT SS HD	10

Tyres & Rims

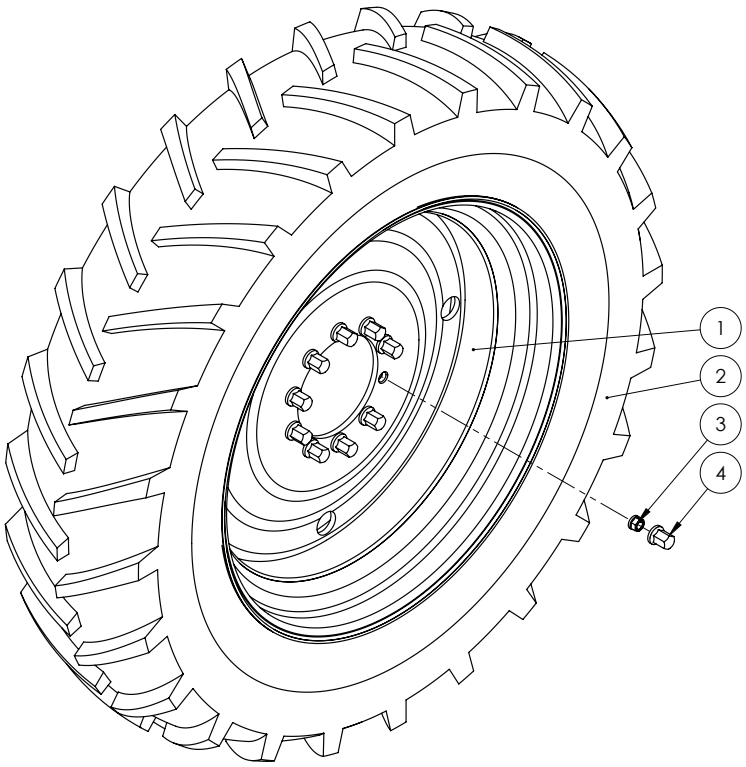

COMBO.	ITEM NO.	PART NUMBER	DESCRIPTION
A	1	GA1500004	RIM - DD16 X 46, 0MM OFFSET, 10 STUD 335 PCD
	2	GA5066230	TYRE - 480/80 R46 (18.4 R46 158 A8) - AGRIMAX/TANLI/ HARVEST
B	1	GA1500050	RIM - AG50-15, 10 STUD 335 PCD, 0MM AND -18MM OFFSET, UNIVERSAL, 290MM CENTRE, NG23
	2	GA1500049	TYRE - 480/80 R50 HR45 X-LOAD 177A8 TL, HARVEST
C	1	GA1500008	RIM - DD16 X 46, 10 STUD ON 335 PCD, - 20MM OFFSET
	2	GA1500024	TYRE - 520/85R46, X-LOAD 173A8/169D, HARVEST
	3	GA5018892	WHEEL NUT, M22 X 1.5MM, ZP
D	4	GA5070815	HEX NUT CAP SUIT M22 CROP CRUISER STUD, PRE - GA6000054
	4	GA5054675	CAP M20 HEX WHEEL NUT COVER, POST - GA6000073

BOOM CENTRE

Paralift Assembly - 36-48m

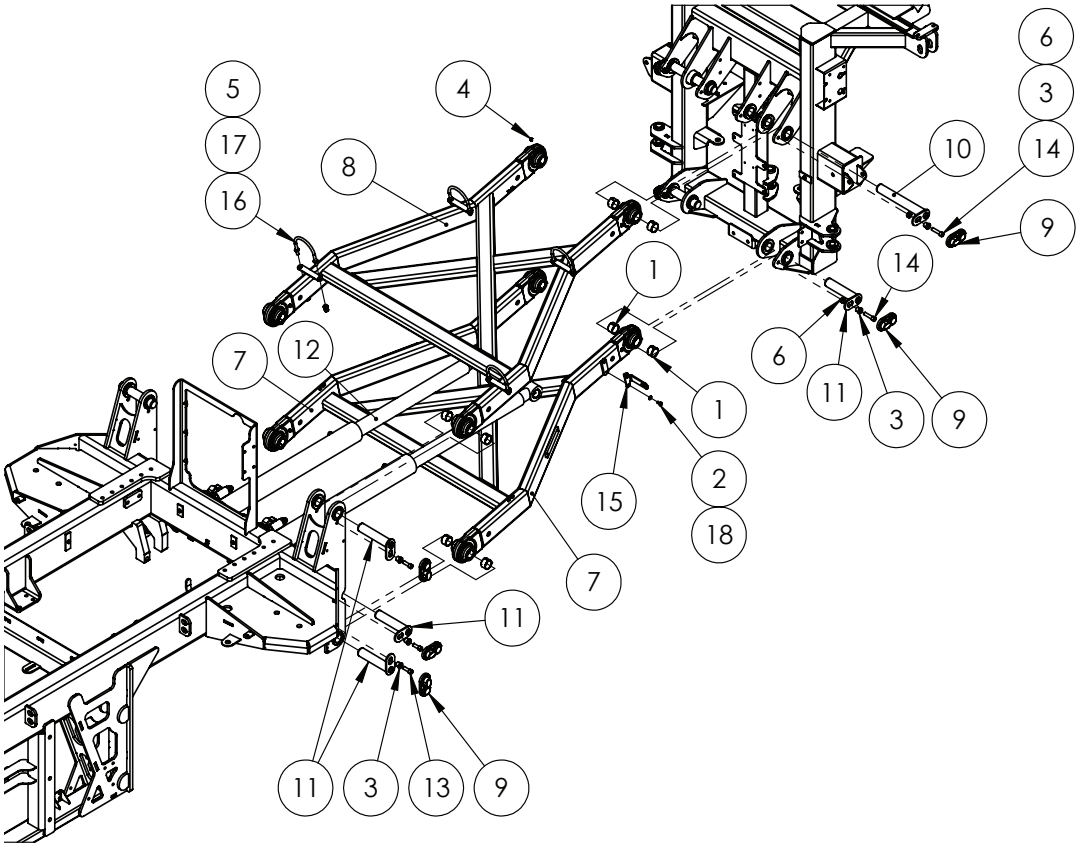

ITEM NO.	PART NUMBER	DESCRIPTION	QTY.
1	GA1700027	BEARING, GLACIER BUSH, 1 1/2" ID X 1" LONG	16
2	GA5011465	BOLT M8 X 16 GR8.8 ZP	2
3	MACH0152	BUSH WITH SHOULDER, 12.3 ID X 25 OD X 21 LONG, SUIT PARALIFT PIN BOLTS	10
4	GA5050450	GREASE NIPPLE, 6MM	8
5	GA5000141	NUT M10 NYLOC ZP	8
6	GA5012461	NUT M12 NYLOC ZP	4
7	GA4602920	PARALIFT ARM, BOTTOM, SELF PROPELLED, SUIT 1 1/2" PINS, MY20	1
8	GA4661220	PARALIFT ARM, TOP, SELF PROPELLED, SUIT 1 1/2" PINS, 2018	1
9	GA5067885	PIN COVER, BLACK, CLIP ON, PLASTIC	10
10	GA5073465	PIN, 1 1/2", SUIT PARALIFT ARM AND CYLINDER, CHROME PLATED	2
11	GA5073460	PIN, 1 1/2", SUIT PARALIFT ARM, CHROME PLATED	8

^ See Chapter 18 'Hydraulics' for sub-assembly

Continued over page

Paralift Assembly - 36-48m

ITEM NO.	PART NUMBER	DESCRIPTION	QTY.
12	GA4950580	PRODUCTION DRAWING ONLY, LIFT HYDRAULIC CYLINDER ASSEMBLY, G6 MY20	2
13	GA5000313	SHCS M12 X 35 GR12.9 ZP	6
14	GA5051470	SHCS M12 X 50 GR12.9 ZP	4
15	GA4537185	SENSOR BRACKET STAND OFF, BOLT ON, SUIT PARALIFT HEIGHT, BOOM FOLD	1
16	GA5070905	U BOLT, ROUND TOP, M10 X 118 X 115MM, WITH STOPPER WASHERS, Z/P	4
17	GA5000117	WASHER M10 FLAT SS HD	8
18	GA5003643	WASHER M8 FLAT SS HD	2

Bump Stops & Accumulators - 36-42m

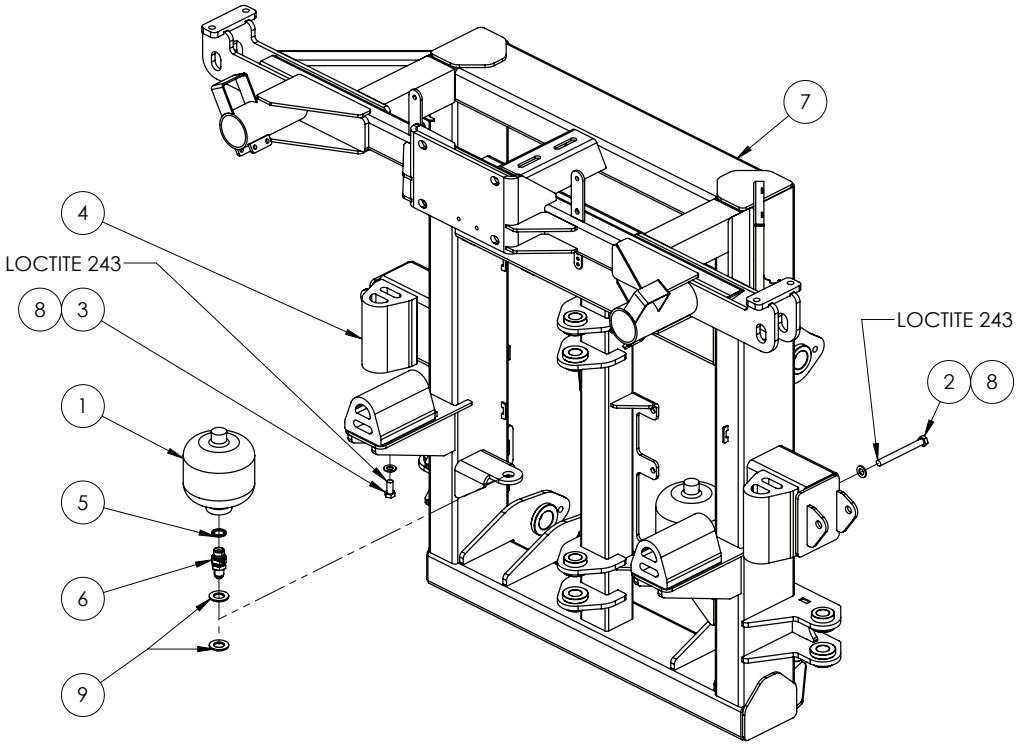

ITEM NO.	PART NUMBER	DESCRIPTION	QTY.
1	GA5007787	ACCUMULATOR, HYDRAULIC, 1L, PRECHARGED TO 70 BAR	2
2	GA5000265	BOLT M12 X 120 GR8.8 ZP	2
3	GA5011229	BOLT M12 X 25 GR8.8 ZP	2
4	GA5075240	BUMP STOP RUBBER WITH THREADED INSERT	4
5	GA3500159	HYDRAULIC SEAL, BONDED, 1/2", RL21D-08	2
6	GA3500717	HYDRAULIC ADAPTOR, BULKHEAD NIPPLE, 1/2" BSPP MALE X 3/4" JIC MALE, S130P-0812	2
7	GA4602460	PARALIFT REAR, TRITECH, MY20	1
8	GA5000577	WASHER M12 FLAT SS HD	4
9	GA5001741	WASHER M20 FLAT SS HD	4

Bump Stops & Accumulators - 48m

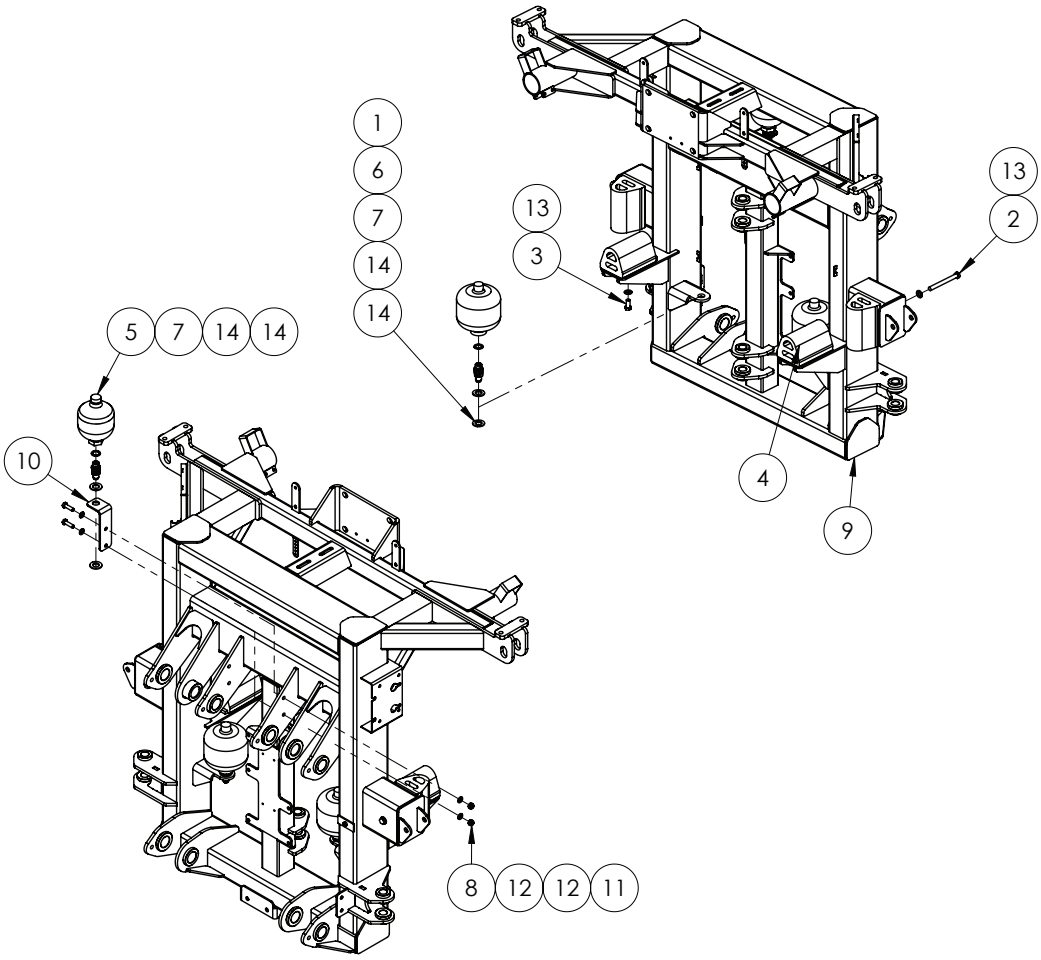

48MT PARALIFT REAR

ITEM NO.	PART NUMBER	DESCRIPTION	QTY.
1	GA5007787	ACCUMULATOR 1.0L PRECHARGE 70 BAR	2
2	GA5000265	BOLT M12 X 120 GR8.8 ZP	2
3	GA5011229	BOLT M12 X 25 GR8.8 ZP	2
4	GA5075240	BUMP STOP RUBBER WITH THREADED INSERT	4
5	GA3501087	HYDRAULIC ACCUMULATOR, 0.6L, 90 BARPRECHARGE, HYDAC	1
6	GA3500159	HYDRAULIC SEAL, BONDED, 1/2”, RL21D-08	3
7	GA3500717	HYDRAULIC ADAPTOR, BULKHEAD NIPPLE, 1/2” BSPP MALE X 3/4” JIC MALE, S130P-0812	3
8	GA5000141	NUT M10 NYLOC ZP	2
9	GA4602460	PARALIFT REAR, TRITECH, MY20	1
10	GA4411685	PLATE, ACCUMULATOR MOUNT, 48M BOOM	1
11	GA5006111	SET SCREW M10 X 35 GR8.8 ZP	2
12	GA5000117	WASHER 10mm FLAT SS HD	4
13	GA5000577	WASHER 12mm FLAT SS HD	4
14	GA5001741	WASHER 20mm FLAT SS HD	6

Lower Limit Sensor - 36-48m

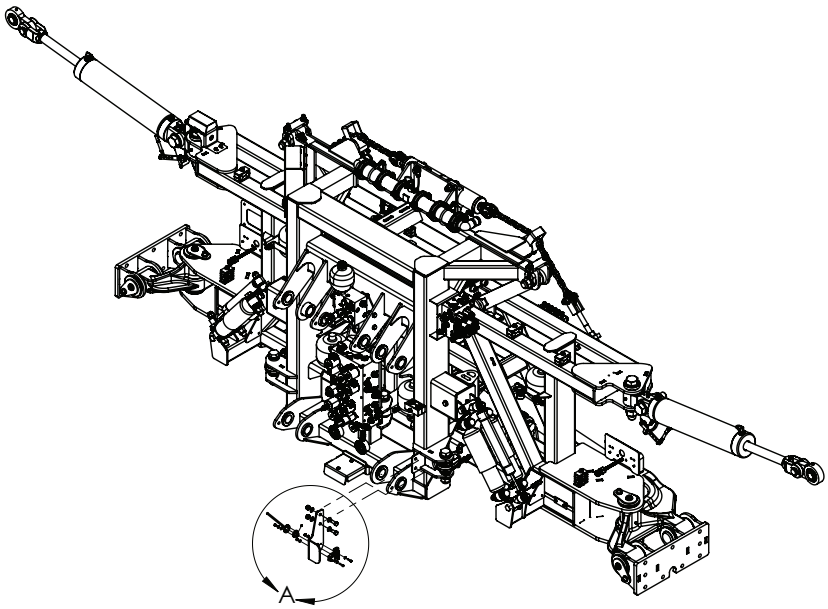

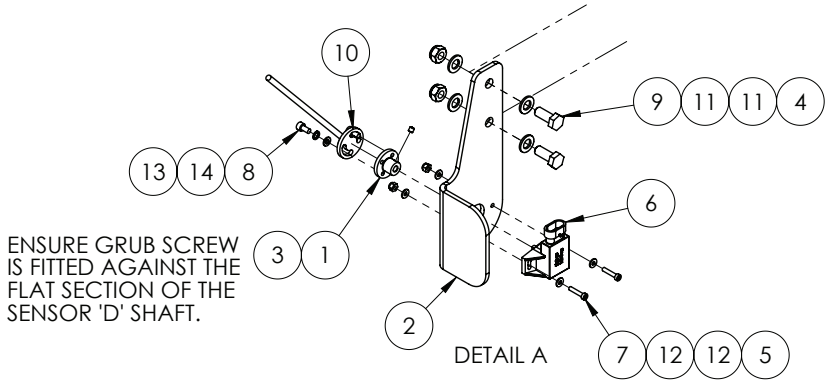

ITEM NO.	PART NUMBER	DESCRIPTION	QTY.
1	GA4552855	BUSH-TILT SENSOR SWITCH SP 2011	1
2	GA4537180	LIFT HEIGHT SENSOR BRACKET LYKKETRONIC	1
3	GA5069970	M5 GRUB SCREW X 5mm LONG S/S	1
4	GA5000141	NUT M10 NYLOC ZP	2
5	GA5049025	NUT M4 NYLOC SS	2
6	GA5069457	POTENTIOMETER, 120 DEGREE, ELOBAU, GATMC	1
7	GA5069375	SHCS M4 X 20 SS 304	2
8	GA5069975	SHCS M5 X 10 SS A2-70	2
9	GA5006161	SET SCREW M10 X 25 GR8.8 ZP	2
10	GA4659191	TILT SENSOR ARM-PARA LIFT ARMS SP 2011	1
11	GA5000117	WASHER 10mm FLAT SS HD	4
12	GA5020510	WASHER 4mm FLAT SS	4
13	GA5003983	WASHER 5mm FLAT SS	2
14	GA5003629	WASHER 5mm SPRING SS	2

Height Sensor - 36-48m

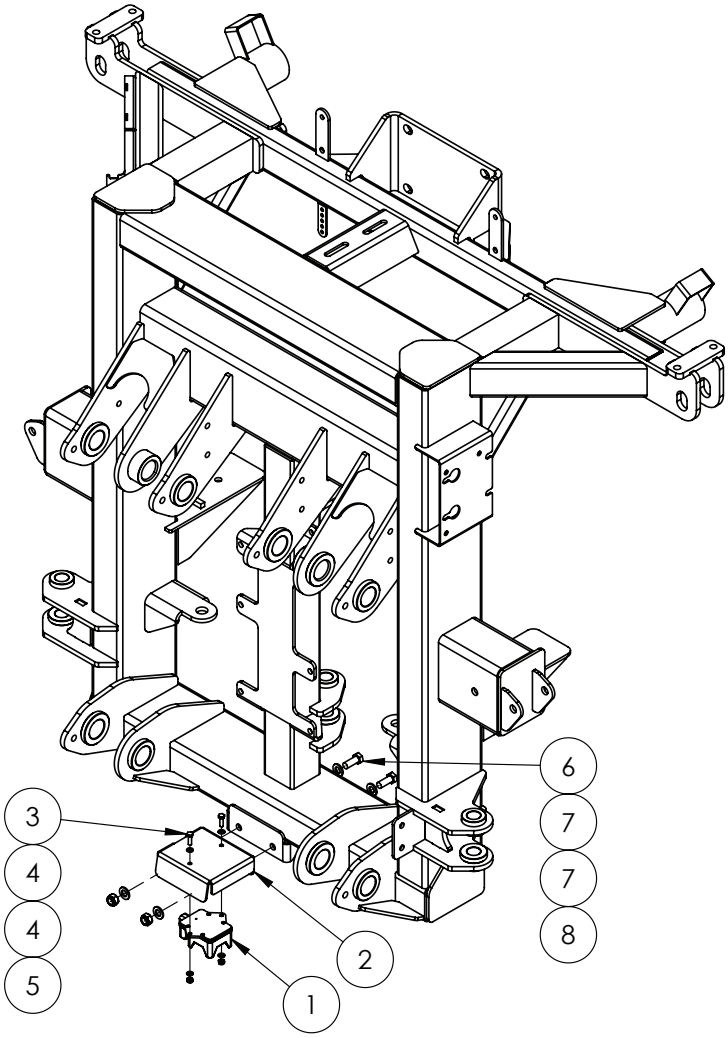

ITEM NO.	PART NUMBER	DESCRIPTION	QTY.
1	GA3000382	SENSOR, RAVEN XRT BOOM HEIGHT RADAR	1
2	GA4406545	PLATE, RADAR SENSOR BRACKET, RAVEN XRT, CENTRE SECTION	1
3	GA5004065	BOLT M6 X 20 GR8.8 ZP	2
4	GA5004437	WASHER 6MM FLAT SS	4
5	GA5048115	NUT M6 NYLOC ZP	2
6	GA5000305	SET SCREW M12 X 30 GR8.8 ZP	2
7	GA5000577	WASHER 12MM FLAT SS HD	4
8	GA5012461	NUT M12 NYLOC ZP	2

Programmable Logic Controllers - 36-48m

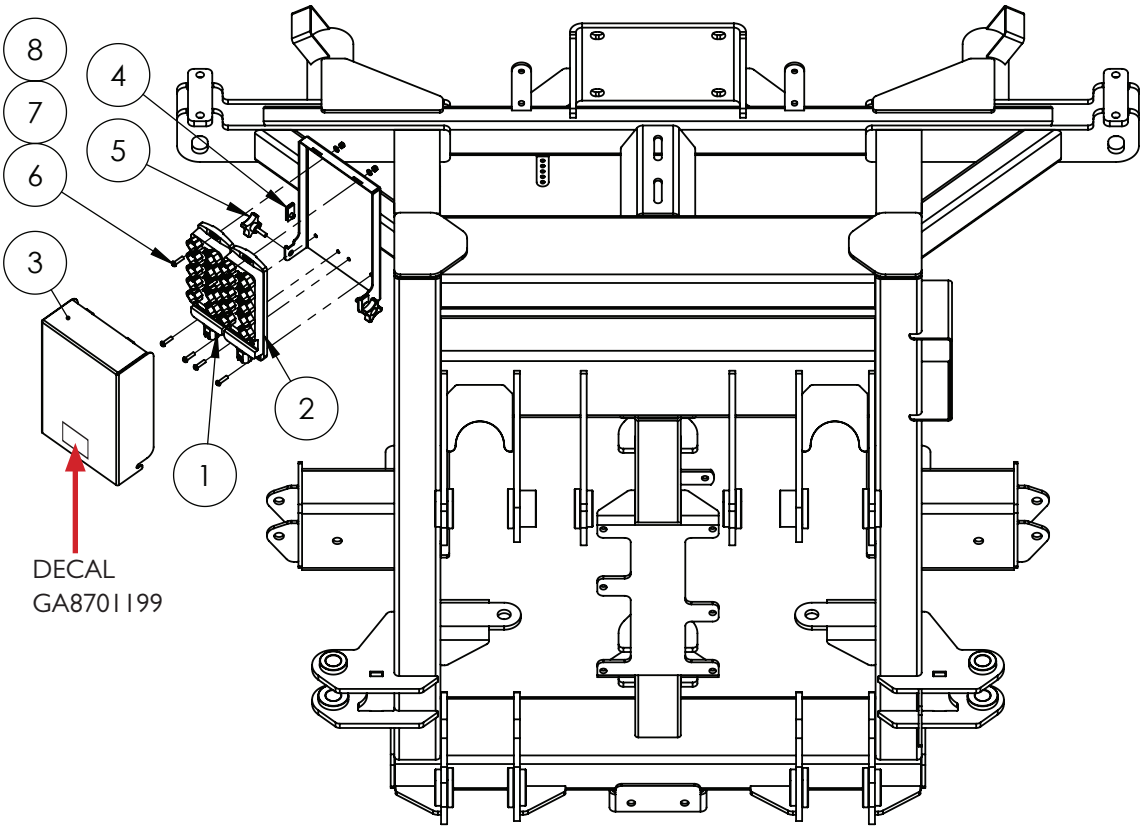

ITEM NO.	PART NUMBER	DESCRIPTION	QTY.
-	GA8701199	DECAL, WARNING DO NOT PRESSURE WASH ELECTRICAL CONNECTIONS	1
1	GA3000309	I/O MODULE, 16 OUTPUT CHANNELS, CR2051, IFM, G6 BOOM MODULE A	1
2	GA3000310	I/O MODULE, 8 OUTPUT CHANNELS, 8 INPUT CHANNELS, CR2052, IFM, G6 BOOM MODULE B	1
3	GA4406165	PLATE, IO MODULE COVER, PARALIFT REAR	1
4	GA5066830	SPEED CLIP M6	2
5	GA5069965	STAR KNOB 40 OD M6 X 20	2
6	GA0500004	BHCS M5 X 20 SS A2-70	6
7	GA5003983	WASHER 5MM FLAT SS	6
8	GA5003974	NUT M5 NYLOC ZP	6

Delta Links - 36-48m

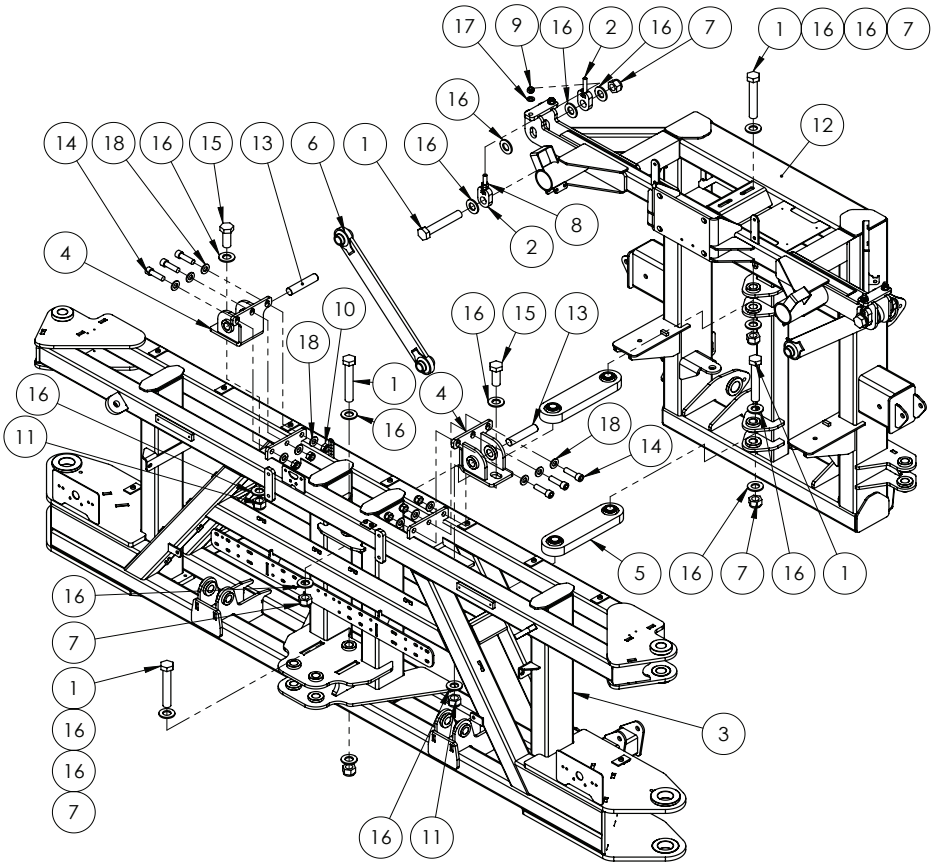

ITEM NO.	PART NUMBER	DESCRIPTION	QTY.
1	GA4683145	BOLT 1 UNC X 6 CUT DOWN FROM 7	6
2	GA4656260	BOOM DELTA HANGER ADJUSTER BOLT	4
3	GA4600601	CENTRE SECTION, 36m - 48m BOOM, MY20	1
4	GA4600605	DELTA LINK MOUNT, CENTRE SECTION, 48m BOOM	2
5	GA5067855	DELTA LINK, SHORT, HEAVY DUTY	2
6	GA4656240	LONG DELTA LINK	2
7	GA5012439	NUT 1" NYLOC UNC ZP	6
8	GA5000559	NUT M12 HEX ZP	4
9	GA5012461	NUT M12 NYLOC ZP	4
10	GA5001029	NUT M16 NYLOC ZP	6
11	GA5012446	NUT, 1", UNF, 12 TPI, NYLOC ZP	2
12	GA4600630	PARALIFT REAR, 48m BOOM	1
13	GA4550495	PIN, DELTA LINK CENTRE SECTION MOUNT, 1" OD X 120mm LONG	2
14	GA5003687	SHCS M16 X 55 GR12.9 ZP	6
15	GA0500027	SET SCREW, 1" X 2 1/2" UNF 12 TPI, ZP	2
16	GA5017681	WASHER 1 X 2 7G FLAT THIN SS	20
17	GA5000577	WASHER 12mm FLAT SS HD	4
18	GA5001043	WASHER 16mm FLAT SS HD	12

Delta Link - Long (Grease Configurations)

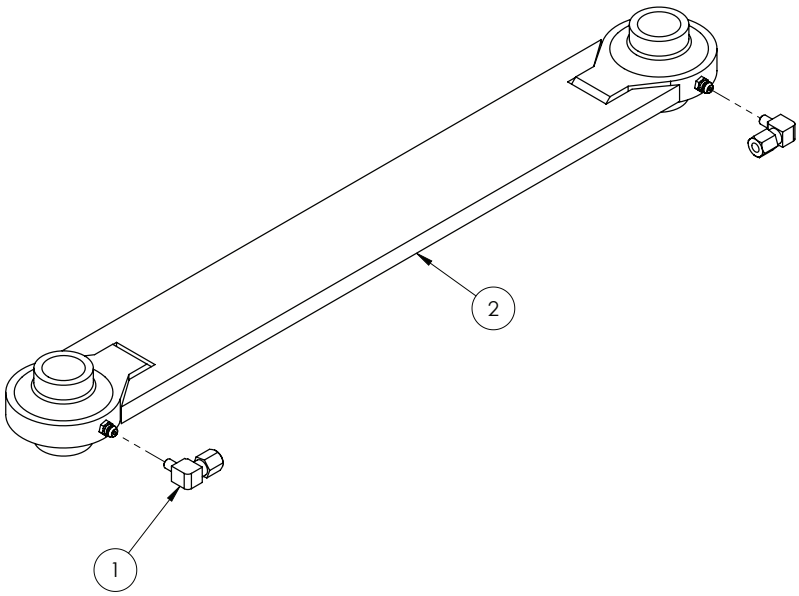

ITEM NO.	PART NUMBER	DESCRIPTION	QTY.
1	GA5069995	GREASE FITTING LINE CONNECTOR ELBOW 6mm	2
2	GA4656240	LONG DELTA LINK	1

Delta Link - Short (Grease Configurations)

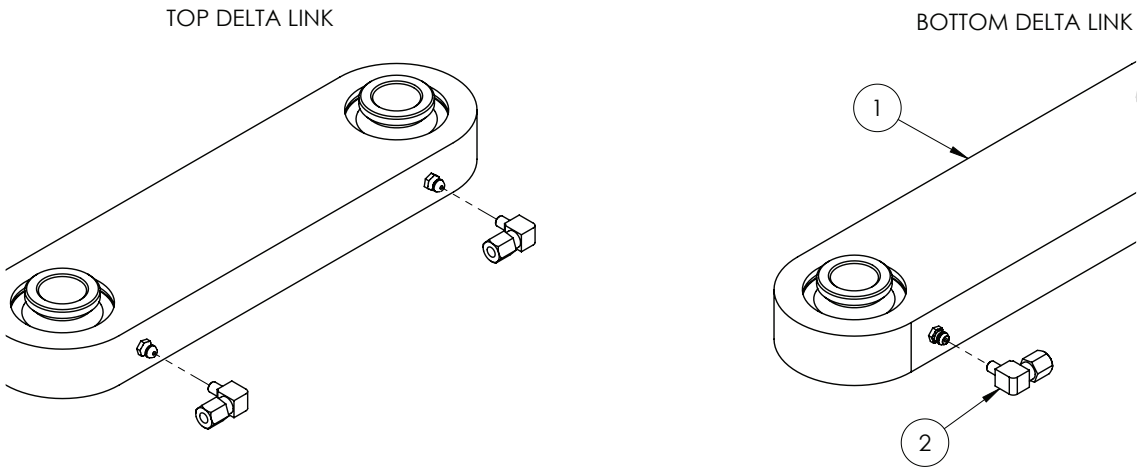

TE:

ITEM NO.	PART NUMBER	DESCRIPTION	QTY.
1	GA5071695	COUPLING, MALE STUD, OLIVE TYPE, AUTO GREASER	2
2	GA5067855	DELTA LINK, SHORT, HEAVY DUTY	1
3	GA5071690	ELBOW, M6 X M8 CONNECTOR STUD, AUTO GREASE	2
4	GA5069995	GREASE FITTING LINE CONNECTOR ELBOW 6mm	2

Yaw - 36m

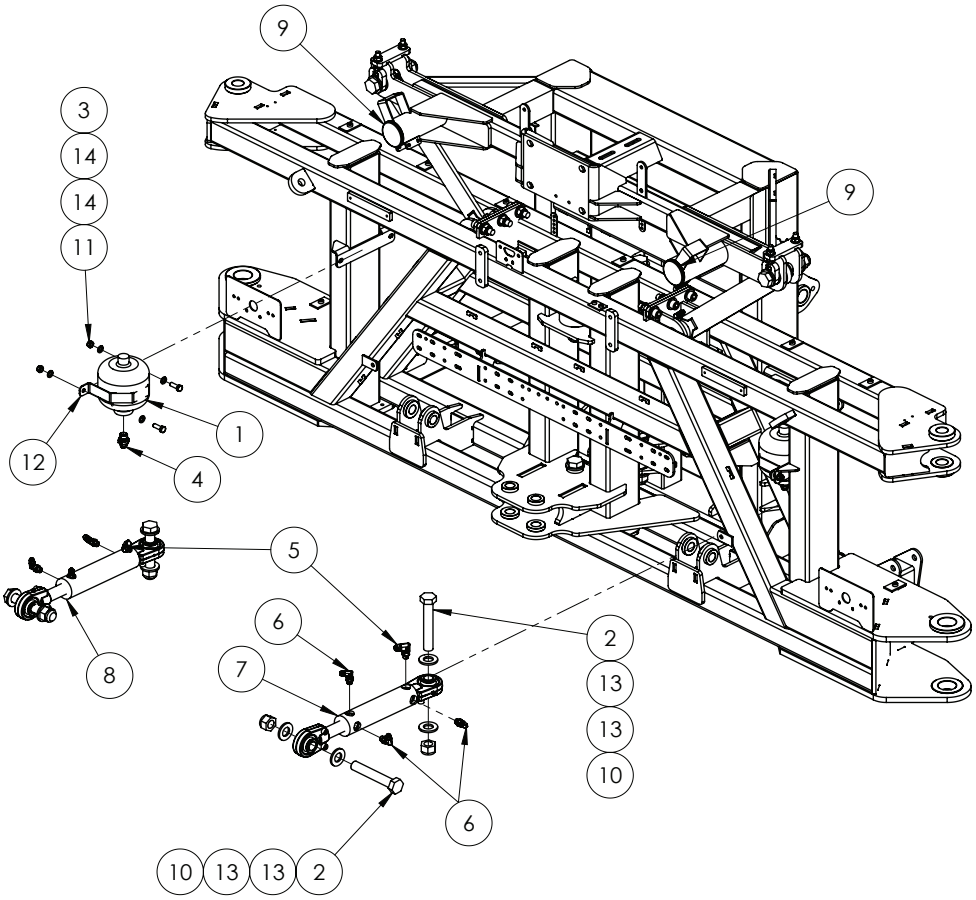

ITEM NO.	PART NUMBER	DESCRIPTION	QTY.
1	GA5007787	ACCUMULATOR, HYDRAULIC, 1L, PRECHARGED TO 70 BAR	2
2	GA4683145	BOLT 1 UNC X 6 CUT DOWN FROM 7	4
3	GA5065455	BOLT M10 X 30 GR8.8 ZP	4
4	GA3500303	HYDRAULIC ADAPTER, NIPPLE, 1/2" BSPP O-RING MALE X 3/4" JIC MALE, S74-0812	2
5	GA3500802	HYDRAULIC ADAPTOR, ELBOW, 90 DEGREE, 3/4" JIC MALE X 9/16" UN MALE O-RING, S91-1209	2
6	GA3500716	HYDRAULIC ADAPTOR, ELBOW, 90 DEGREE, 9/16" JIC MALE X 9/16" UN MALE O-RING, S91-0909	6
7 ^	GA5060817	HYDRAULIC CYLINDER, BORE 2", ROD 1.25", STROKE 117.5MM	1
8 ^	GA5060817	HYDRAULIC CYLINDER, BORE 2", ROD 1.25", STROKE 117.5MM	1
9	GA5050355	END CAP, PLASTIC, BLACK, INSERT, ROUND. 76.2 MM, 3.2 - 5.0 MM WALL	2
10	GA5012439	NUT 1 UNC NYLOC ZP	4
11	GA5000141	NUT M10 NYLOC ZP	4
12	GA4406410	PLATE, 1L ACCUMULATOR MOUNT STRAP, CENTRE SECTION	2
13	GA5017659	WASHER 1 FLAT ZP HD (5MM THICK)	8
14	GA5000117	WASHER 10MM FLAT SS HD	8

^ See Chapter 18 'Hydraulics' for sub-assembly

Yaw - 42m

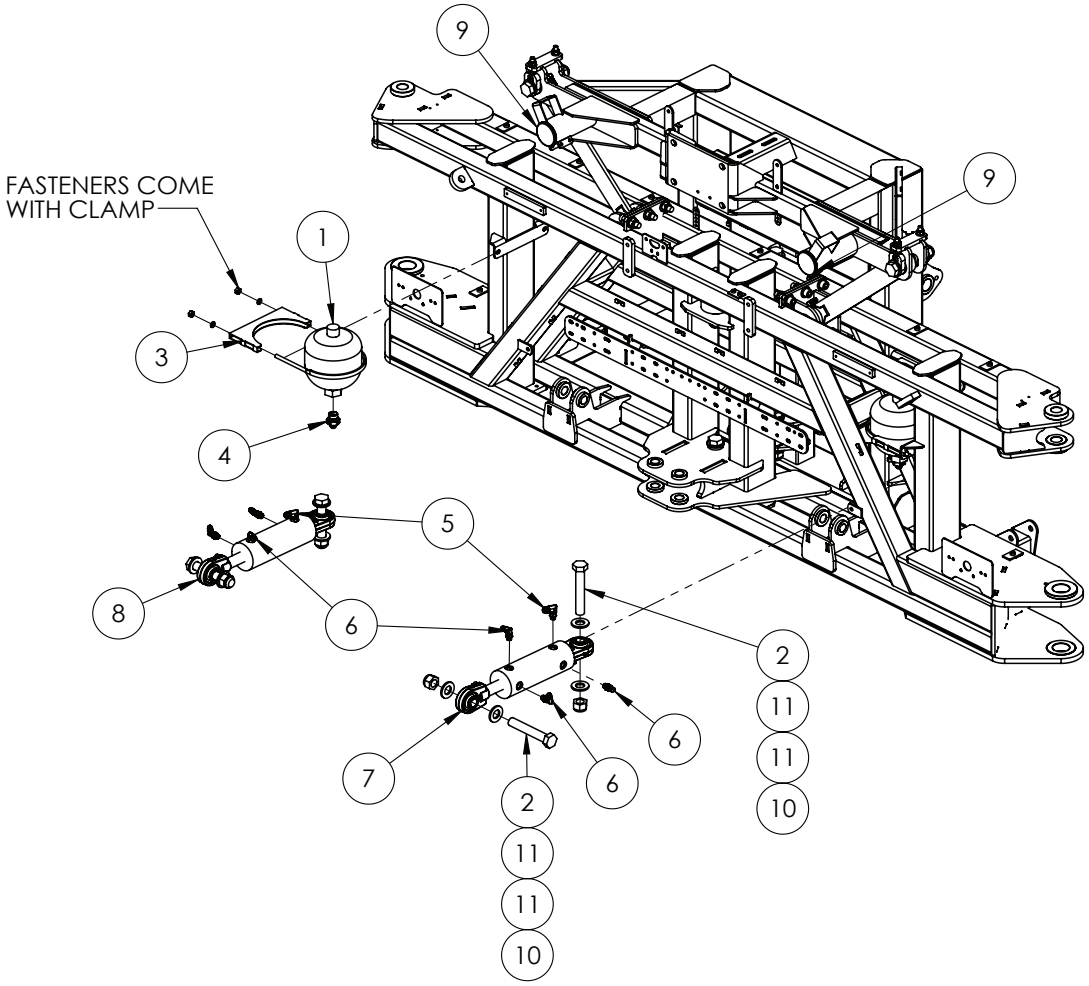

ITEM NO.	PART NUMBER	DESCRIPTION	QTY.
1	GA3500021	ACCUMULATOR, HYDRAULIC, 2L, 90 BAR PRE CHARGE, SUIT 42M YAW	2
2	GA4683145	BOLT 1 UNC X 6 CUT DOWN FROM 7	4
3	GA5070025	CLAMP EXHAUST 7 "	2
4	GA3500710	HYDRAULIC ADAPTER, NIPPLE, 3/4" BSPP O-RING MALE X 3/4" JIC MALE, S74-1212	2
5	GA3500802	HYDRAULIC ADAPTOR, ELBOW, 90 DEGREE, 3/4" JIC MALE X 9/16" UN MALE O-RING, S91-1209	2
6	GA3500716	HYDRAULIC ADAPTOR, ELBOW, 90 DEGREE, 9/16" JIC MALE X 9/16" UN MALE O-RING, S91-0909	6
7 ^	GA5060818	HYDRAULIC CYLINDER, BORE 3", ROD 1.25", STROKE 117.5MM	1
8 ^	GA5060818	HYDRAULIC CYLINDER, BORE 3", ROD 1.25", STROKE 117.5MM	1
9	GA5050355	END CAP, PLASTIC, BLACK, INSERT, ROUND. 76.2 MM, 3.2 - 5.0 MM WALL	2
10	GA5012439	NUT 1 UNC NYLOC ZP	4
11	GA5017659	WASHER 1 FLAT ZP HD (5MM THICK)	8

^ See Chapter 18 'Hydraulics' for sub-assembly

Yaw - 48m

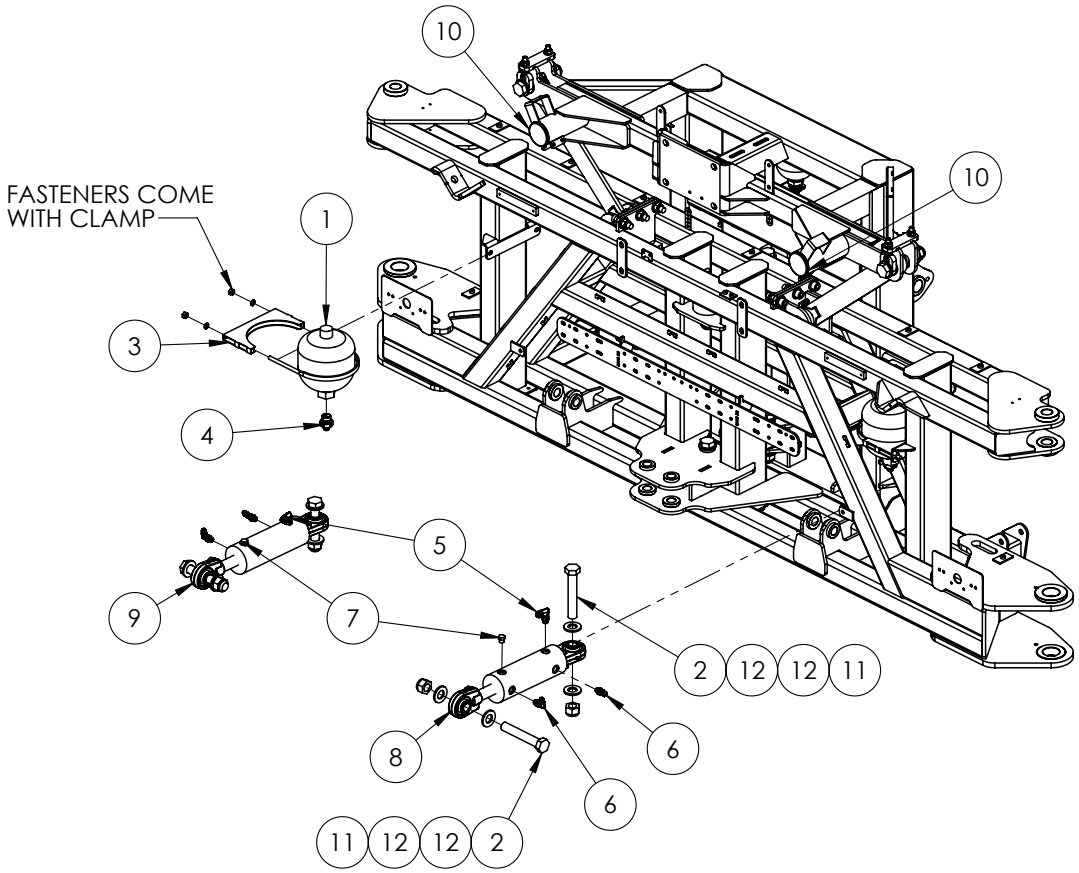

ITEM NO.	PART NUMBER	DESCRIPTION	QTY.
1	GA3500021	ACCUMULATOR, HYDRAULIC, 2L, 90 BAR PRE CHARGE, SUIT 42M YAW	2
2	GA4683145	BOLT 1 UNC X 6 CUT DOWN FROM 7	4
3	GA5070025	CLAMP EXHAUST 7 "	2
4	GA3500710	HYDRAULIC ADAPTER, NIPPLE, 3/4" BSPP O-RING MALE X 3/4" JIC MALE, S74-1212	2
5	GA3500802	HYDRAULIC ADAPTOR, ELBOW, 90 DEGREE, 3/4" JIC MALE X 9/16" UN MALE O-RING, S91-1209	2
6	GA3500716	HYDRAULIC ADAPTOR, ELBOW, 90 DEGREE, 9/16" JIC MALE X 9/16" UN MALE O-RING, S91-0909	4
7	GA3500380	HYDRAULIC ADAPTOR, PLUG, 9/16" UN MALE O-RING, S97-09	2
8 ^	GA5060818	HYDRAULIC CYLINDER, BORE 3", ROD 1.25", STROKE 117.5MM	1
9 ^	GA5060818	HYDRAULIC CYLINDER, BORE 3", ROD 1.25", STROKE 117.5MM	1
10	GA5050355	END CAP, PLASTIC, BLACK, INSERT, ROUND. 76.2 MM, 3.2 - 5.0 MM WALL	2
11	GA5012439	NUT 1 UNC NYLOC ZP	4
12	GA5017659	WASHER 1 FLAT ZP HD (5MM THICK)	8

^ See Chapter 18 'Hydraulics' for sub-assembly

Roll Shockers - 36-48m

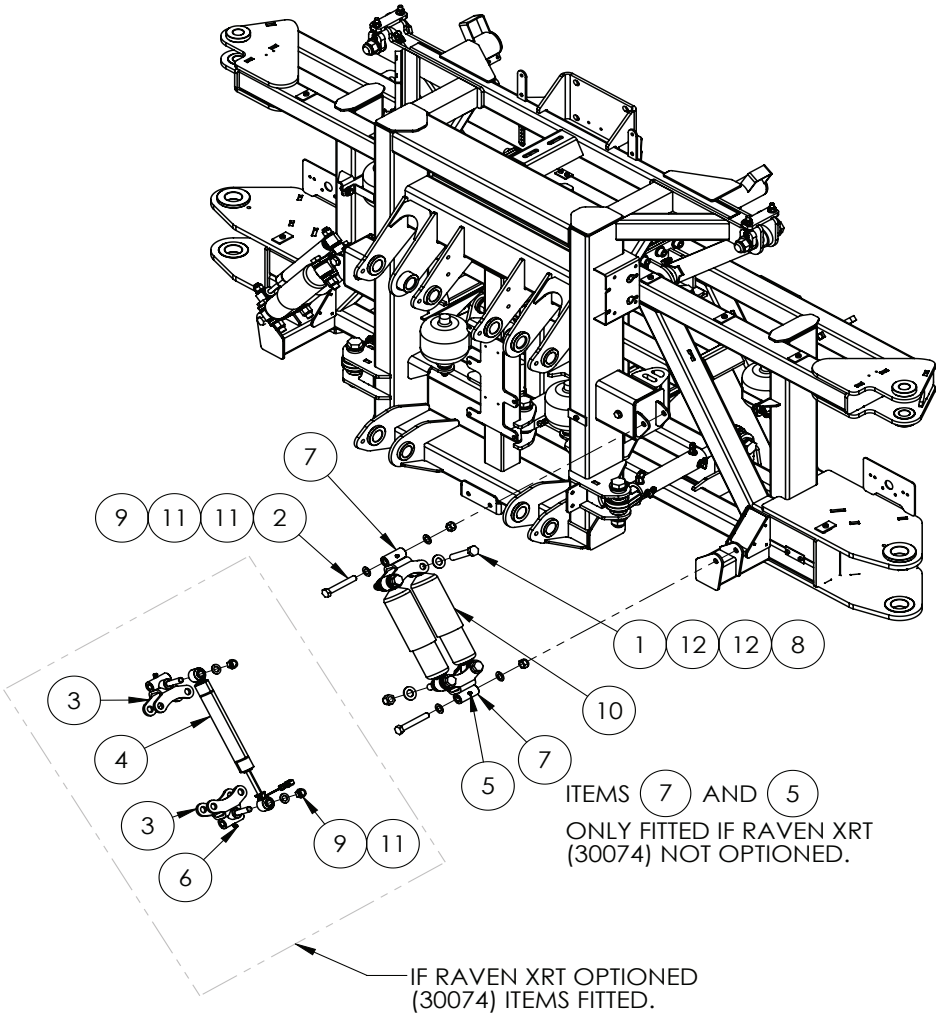

ITEM NO.	PART NUMBER	DESCRIPTION	QTY.
1	GA5049490	BOLT 3/4 UNC X 4 GR8 ZP	8
2	GA5000855	BOLT M16 X 110 GR8.8 ZP	4
3	GA4602475	CENTRE ROLL SHOCKER MOUNT WITH RAVEN XRT VARIABLE DAMPER MOUNT	4
4	GA3000379	DAMPER, MR, RAVEN XRT, VARIABLE, MAGNETO-RHEOLOGICAL, 6” STROKE, 13141000001	2
5	GA5012203	GREASE NIPPLE, SHORT, 1/4 UNF, MACH0207	4
6	GA5009637	GREASE NIPPLE, ELBOW, 90 DEGREE, 1/4 UNF MALE, MACH0207	4
7	GA4659360	MOUNTING BRACKET, DUAL ROLL SHOCK ABSORBER, CENTRE	4
8	GA5048430	NUT 3/4 UNC NYLOC ZP	8
9	GA5001029	NUT M16 NYLOC ZP	8
10	GA5015139	SHOCK ABSORBER, DOUBLE EYE, 19MM EYE, 82MM OD, BLACK	4
11	GA5001055	WASHER 16MM FLAT SS	12
12	GA5001045	WASHER 3/4 FLAT ZP	16

Centre Section, Tail Lights, 3TS Box & Hydraulic Hose Stack

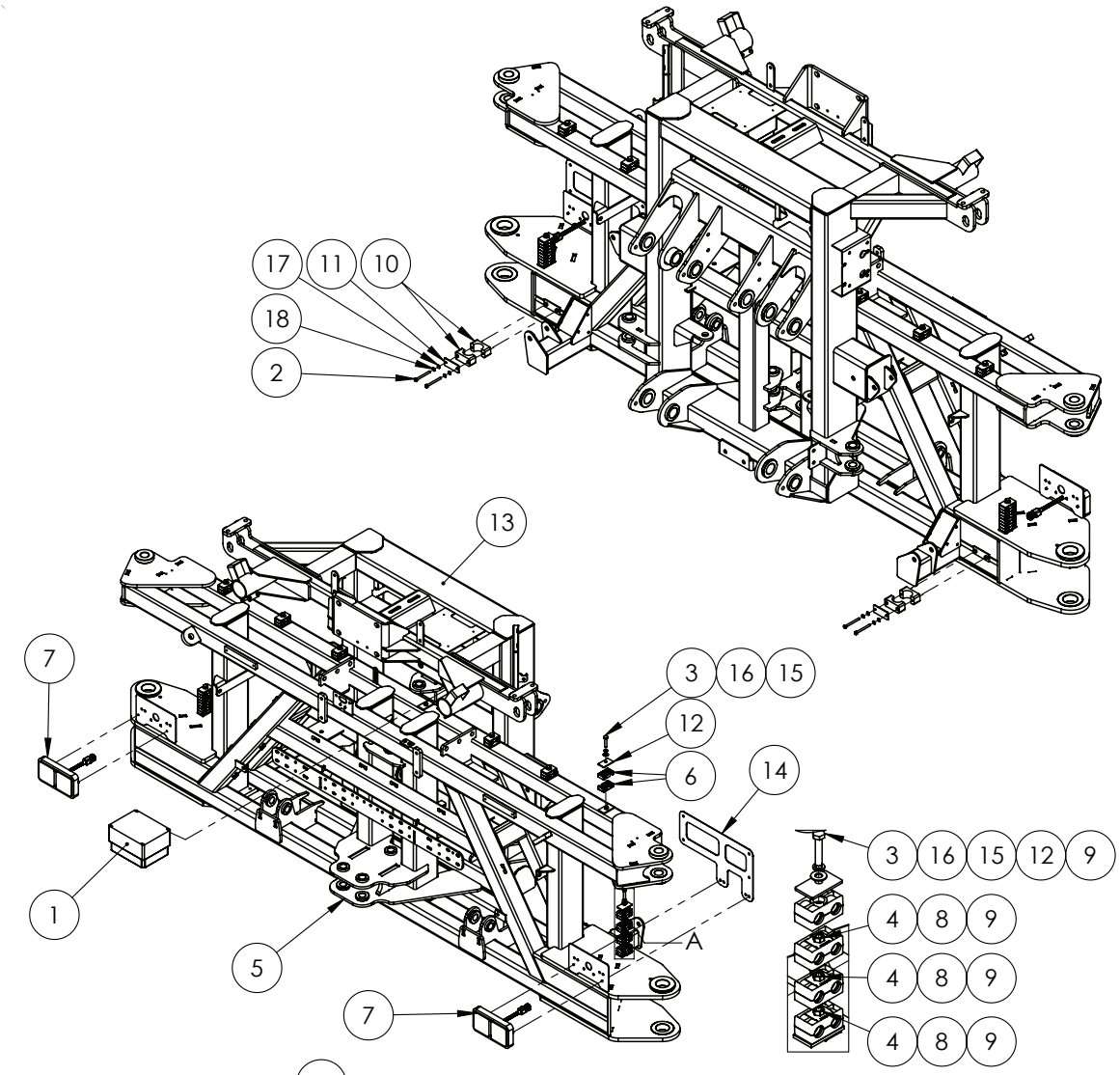

FASTENERS FOR ITEM 7
ARE PART OF LIGHT ASSEMBLY.

DETAIL A
SCALE 1 : 7

ITEM NO.	PART NUMBER	DESCRIPTION	QTY.
1	GA4948781	3TS BOX	1
2	GA5050175	BOLT M6 X 65 GR8.8 ZP	4
3	GA5048655	BOLT M8 X 40 GR8.8 ZP	8
4	GA5070740	BUILD UP BOLT, STACKING, M8 X 20 HYDAC	6
5	GA4600601	CENTRE SECTION, 36m - 48m BOOM, MY20	1
6	GA5078031	DOUBLE CLAMP JAWS PP GR 2 14mm	12
7	GA3000249	LED TAIL LIGHT, LARGE WITH CONNECTOR	2
8	GA5070760	LOCKING PLATE SUIT HYDAC CLAMPS, BUILD UP BOLT, STACKING	6
9	GA3500805	MOUNTING CLAMP, DOUBLE TYPE, JAW, PAIR, SIZE 2, 16mm	8

Continued over page

Centre Section, Tail Lights, 3TS Box & Hydraulic Hose Stack

ITEM NO.	PART NUMBER	DESCRIPTION	QTY.
10	GA5078070	MOUNTING CLAMP, SINGLE TYPE, JAW, PAIR, GROUP 5, 38mm, RCS-38J	2
11	GA5078075	MOUNTING CLAMP, SINGLE TYPE, PLATE, TOP, GROUP 5, RCS-5PT	2
12	GA5078042	MOUNTING CLAMP, DOUBLE TYPE, PLATE, TOP, GROUP 2, RCD-2PT	8
13	GA4600630	PARALIFT REAR, 48m BOOM	1
14	GA4504300	PLATE, NUMBER PLATE MOUNT, BOLT ON, SUIT TAIL LIGHT, SP 2011 ON	1
15	GA5003643	WASHER 8mm FLAT SS HD	8
16	GA5004919	WASHER 8mm SPRING SS	8
17	GA5004437	WASHER M6 FLAT SS HD	4
18	GA5004447	WASHER M6 SPRING SS	4

Boom Mounting, Fold & Tilt Pivot

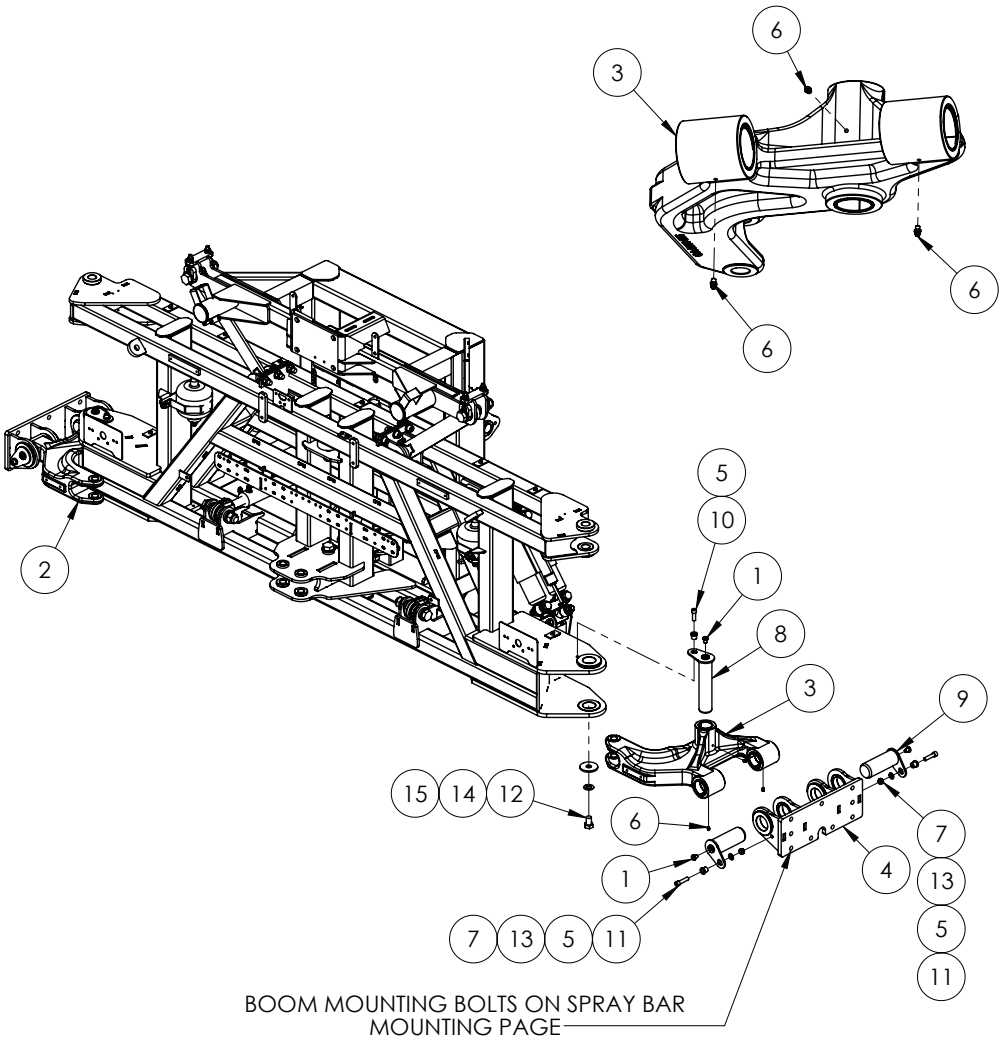

ITEM NO.	PART NUMBER	DESCRIPTION	QTY.
1	GA5069890	BHCS M12 X 16 GR12.9 ZP	6
2	GA4909160	BOOM MOUNT HINGE ASSEMBLY, LH	1
3	GA4909155	BOOM MOUNT HINGE ASSEMBLY, RH	1
4	GA4602100	BOOM MOUNT, INNER WING, UP TO 42M, TRITECH, MY20	2
5	MACH0152	BUSH WITH SHOULDER, 12.3 ID X 25 OD X 21 LONG, SUIT PARALIFT PIN BOLTS	6
6	GA5050450	GREASE NIPPLE, 6MM	6
7	GA5012461	NUT M12 NYLOC ZP	4
8	GA4600620	PIN, BOOM FOLD PIVOT, 50MM OD, FABRICATED, 48M	2
9	GA4600625	PIN, BOOM TILT PIVOT, 60MM OD, FABRICATED, 48M	4
10	GA5000313	SHCS M12 X 35 GR12.9 ZP	2
11	GA5051470	SHCS M12 X 50 GR12.9 ZP	4
12	GA5011323	SET SCREW M20 X 30 GR8.8 ZP	2
13	GA5000577	WASHER 12MM FLAT SS HD	4
14	GA5001741	WASHER 20MM FLAT SS HD	2
15	L073A	WASHER, SUIT DRAWBAR PIN	2

RH Boom Mount Hinge, Cast

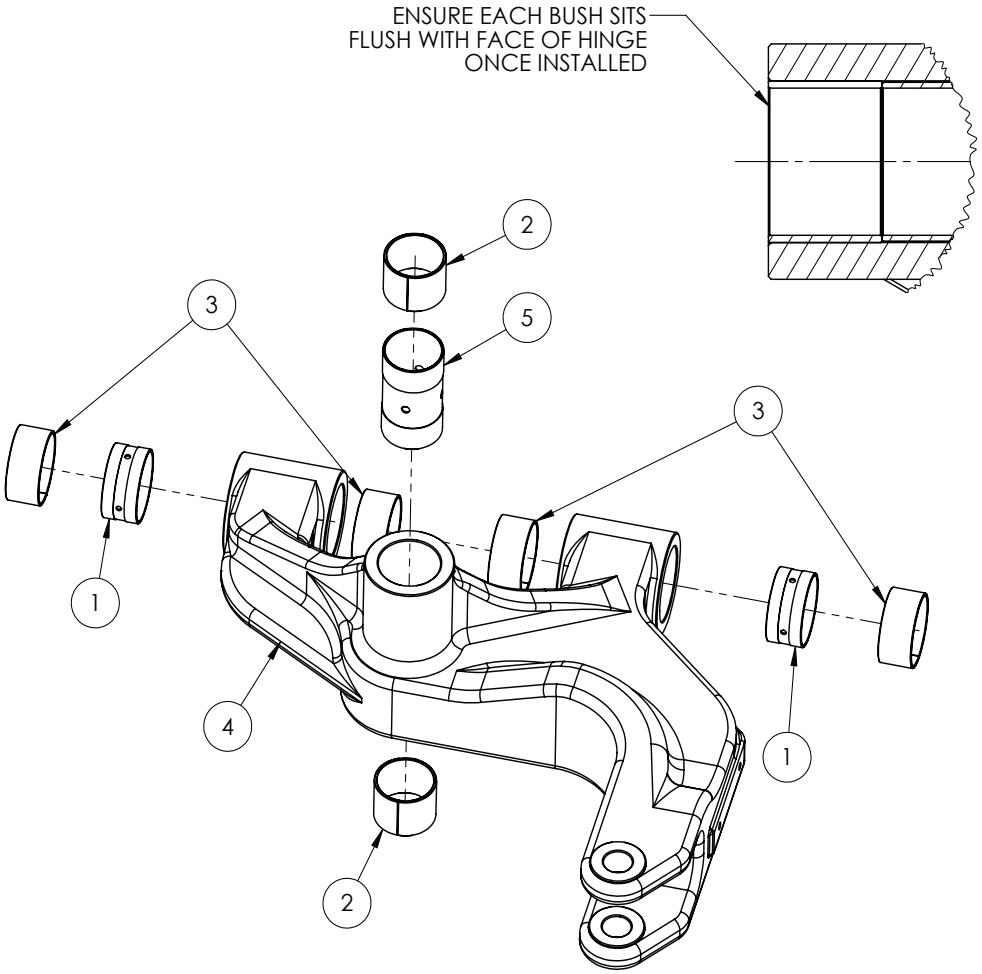

ITEM NO.	PART NUMBER	DESCRIPTION	QTY.
1	GA4551460	BEARING, GLACIER BUSH SPACER, 60mm ID X 32mm LONG, 48M BOOM TILT PIVOT	2
2	GA1700012	BEARING, GLACIER BUSH, 50mm ID X 40mm LONG	2
3	GA1700011	BEARING, GLACIER BUSH, 60mm ID X 30mm LONG	4
4	GA4551455	BOOM MOUNT HINGE, RH,CAST, 48M BOOM	1
5	GA4551635	BUSH, BOOM MOUNT HINGE, FOLD AXIS, GLACIER BUSH SPACER	1

LH Boom Mount Hinge, Cast

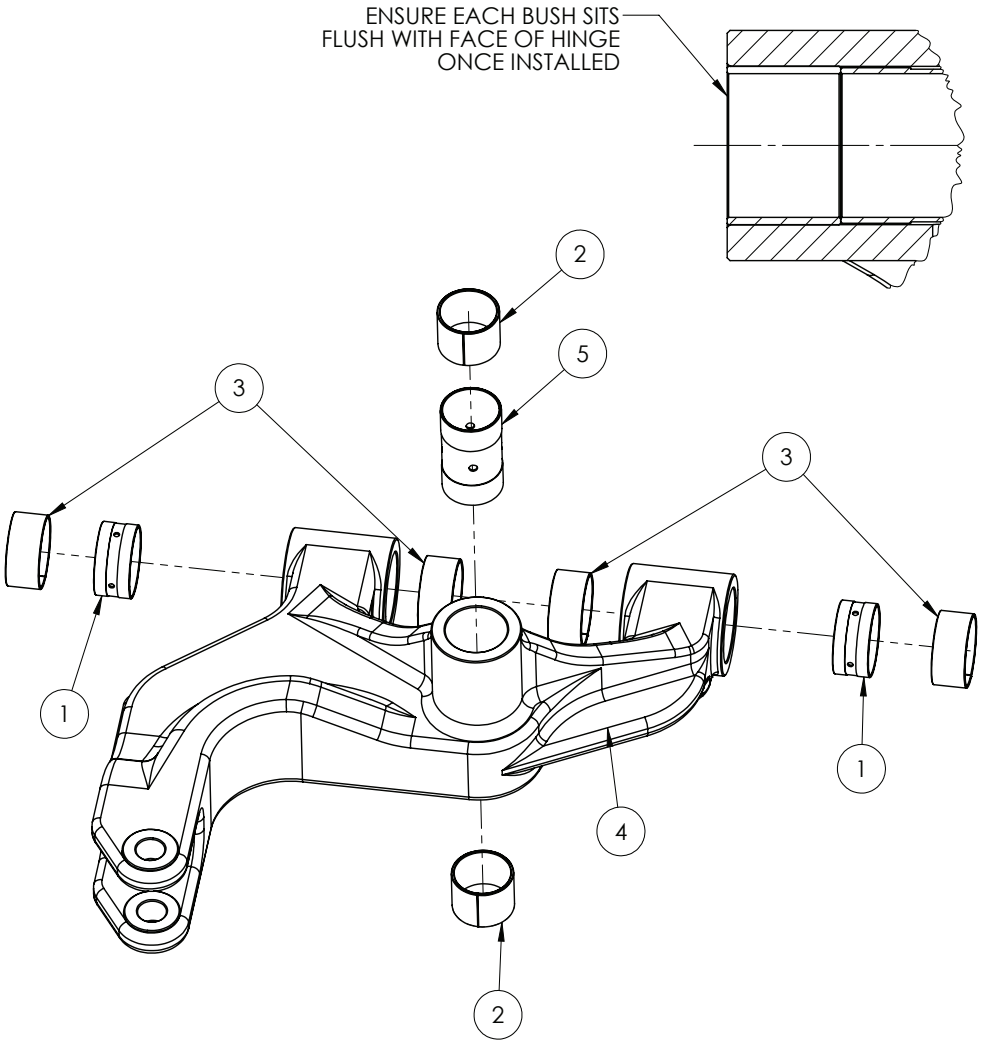

ITEM NO.	PART NUMBER	DESCRIPTION	QTY.
1	GA4551460	BEARING, GLACIER BUSH SPACER, 60mm ID X 32mm LONG, 48M BOOM TILT PIVOT	2
2	GA1700012	BEARING, GLACIER BUSH, 50mm ID X 40mm LONG	2
3	GA1700011	BEARING, GLACIER BUSH, 60mm ID X 30mm LONG	4
4	GA4551450	BOOM MOUNT HINGE, LH, CAST. 48M BOOM	1
5	GA4551635	BUSH, BOOM MOUNT HINGE, FOLD AXIS, GLACIER BUSH SPACER	1

Tilt & Fold - 36m

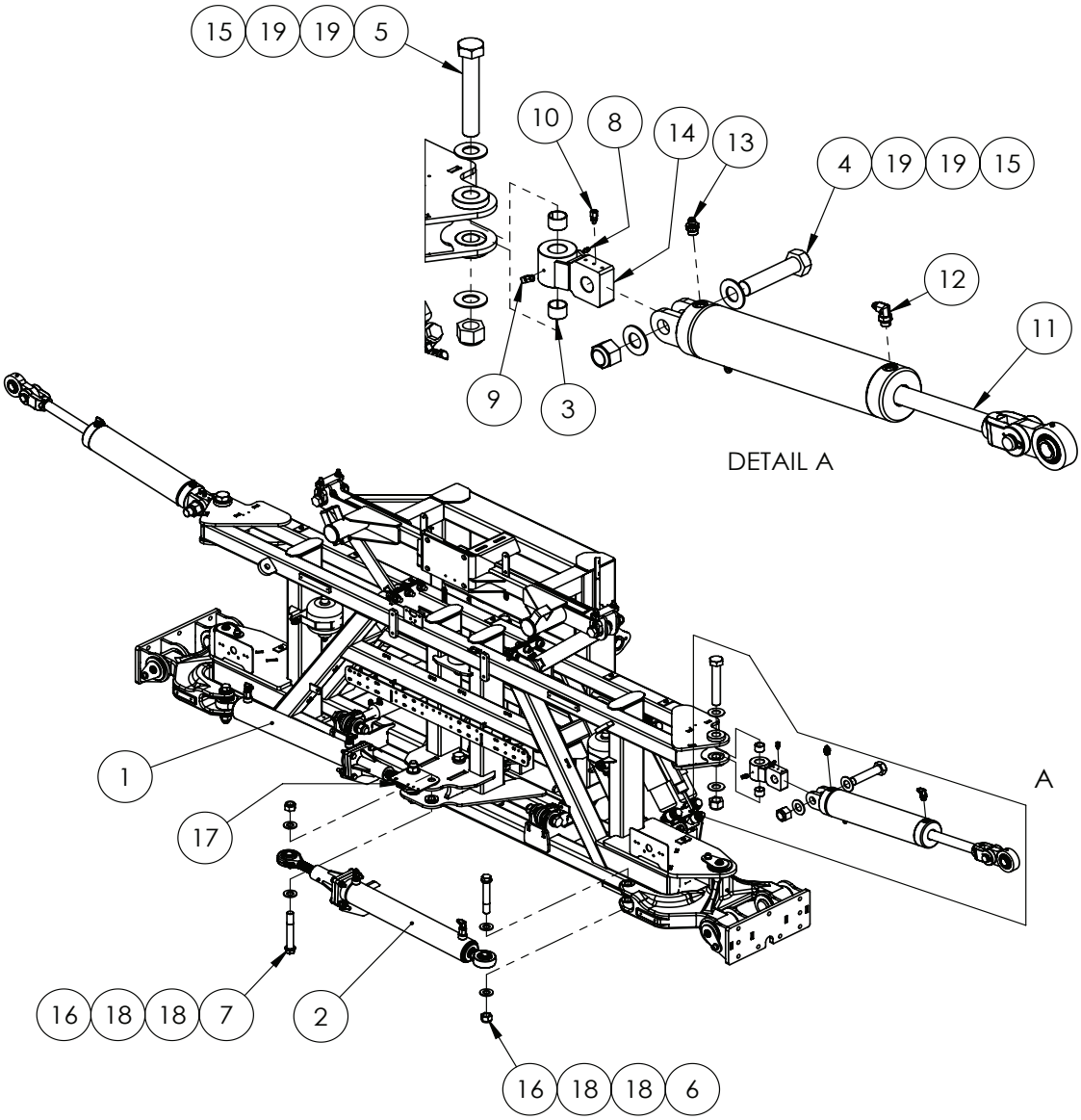

ITEM NO.	PART NUMBER	DESCRIPTION	QTY.
1	^	ASSEMBLY DRAWING ONLY, HYDRAULIC CYLINDER, FOLD, 24-42M, G6, MY20	-
2	^	ASSEMBLY DRAWING ONLY, HYDRAULIC CYLINDER, FOLD, 24-42M, G6, MY20	-
3	GA5073725	BEARING, GLACIER BUSH, 1 1/2" ID X 1" LONG	4
4	GA0500073	BOLT, 1 1/4" X 5 1/2" UNC, ZP, GR8	2
5	GA0500138	BOLT, 1 1/4" X 7 1/2" UNC, ZP, GR8	2
6	GA4553238	BOLT, 1" UNC X 6", EN26, ZP	2
7	GA4553243	BOLT, 1" UNC X 6 1/2", EN26, ZP	2
8	GA5050450	GREASE NIPPLE, 6mm	2
9	GA5069995	GREASE FITTING LINE CONNECTOR ELBOW 6mm	2
10	GA5069985	GREASE FITTING LINE CONNECTOR STRAIGHT 6mm	2

^ See Chapter 18 'Hydraulics' for sub-assembly

Continued over page

Tilt & Fold - 36m

ITEM NO.	PART NUMBER	DESCRIPTION	QTY.
11	GA3500835	HYDRAULIC CYLINDER, BORE 4”, ROD 1.5”, STROKE 300mm	2
12	GA3500700	HYDRAULIC ADAPTOR, ELBOW, 90 DEGREE, 9/16” JIC MALE X 3/4” UN MALE O-RING, S91-0912	2
13	GA3500147	HYDRAULIC ADAPTOR, NIPPLE, 9/16” JIC MALE X 3/4” UN MALE O-RING, S90-0912	2
14	GA4602930	KNUCKLE, CENTRE SECTION, TILT CYLINDER, TRITECH, MY20	2
15	GA0500071	NUT 1 1/4”, NYLOC, ZP, UNC	4
16	GA5012439	NUT 1” NYLOC UNC ZP	4
17	GA4406820	PLATE, REVERSE LIGHT AND CAMERA MOUNT	1
18	GA5017659	WASHER 1 FLAT ZP HD (5mm THICK)	8
19	GA0500072	WASHER, 1 1/4”, FLAT, OD 66 X ID 33.3 X 5mm, ZP	8

Tilt & Fold - 42m

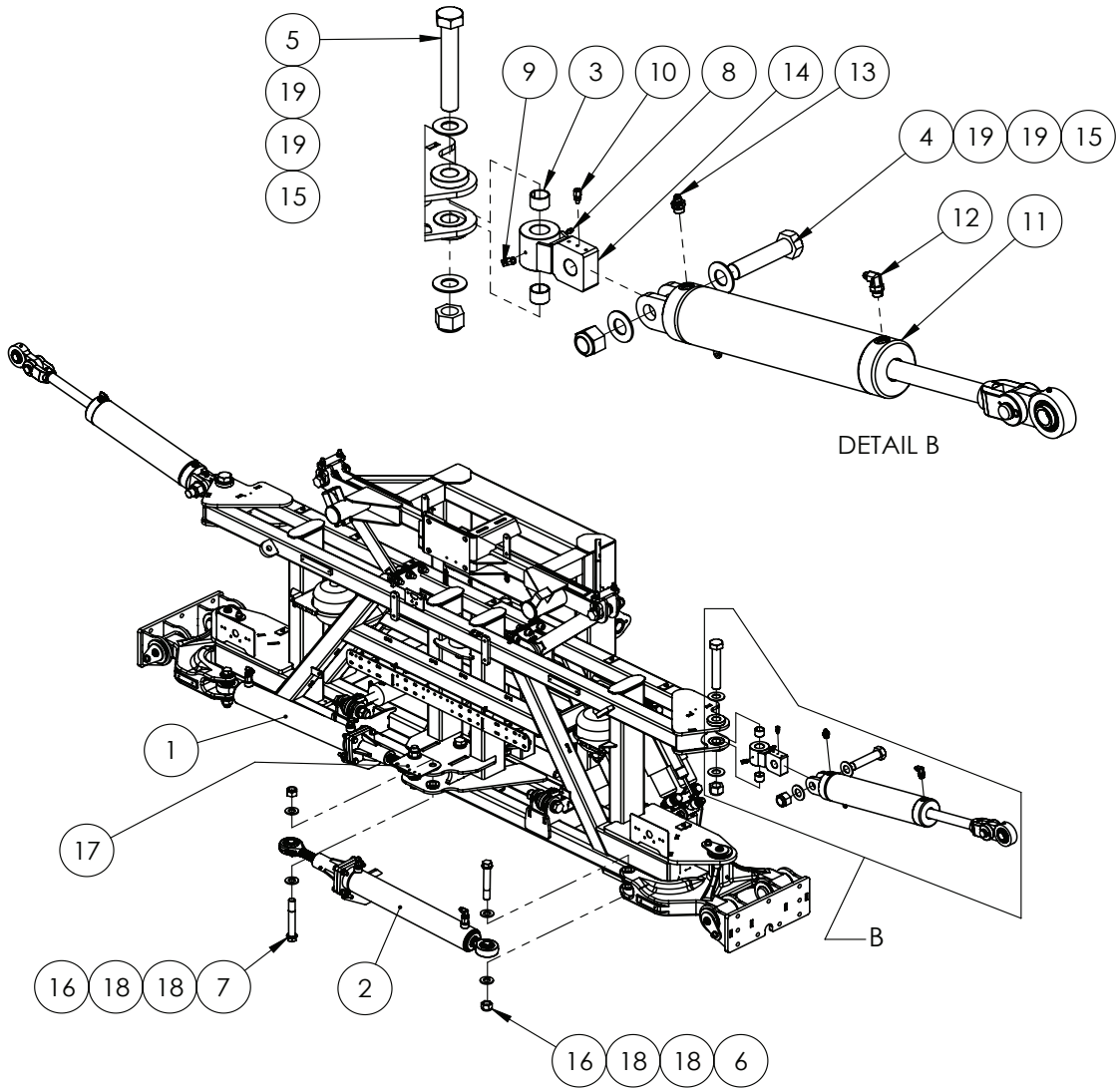

ITEM NO.	PART NUMBER	DESCRIPTION	QTY.
1	^	ASSEMBLY DRAWING ONLY, HYDRAULIC CYLINDER, FOLD, 42M, G6, MY20	1
2	^	ASSEMBLY DRAWING ONLY, HYDRAULIC CYLINDER, FOLD, 42M, G6, MY20	1
3	GA5073725	BEARING, GLACIER BUSH, 1 1/2" ID X 1" LONG	4
4	GA0500073	BOLT, 1 1/4" X 5 1/2" UNC, ZP, GR8	2
5	GA0500138	BOLT, 1 1/4" X 7 1/2" UNC, ZP, GR8	2
6	GA4553238	BOLT, 1" UNC X 6", EN26, ZP	2
7	GA4553243	BOLT, 1" UNC X 6 1/2", EN26, ZP	2
8	GA5050450	GREASE NIPPLE, 6mm	2
9	GA5069995	GREASE FITTING LINE CONNECTOR ELBOW 6mm	2
10	GA5069985	GREASE FITTING LINE CONNECTOR STRAIGHT 6mm	2
11	GA3500835	HYDRAULIC CYLINDER, BORE 4", ROD 1.5", STROKE 300mm	2

^ See Chapter 18 'Hydraulics' for sub-assembly

Continued over page

Tilt & Fold - 42m

ITEM NO.	PART NUMBER	DESCRIPTION	QTY.
12	GA3500700	HYDRAULIC ADAPTOR, ELBOW, 90 DEGREE, 9/16” JIC MALE X 3/4” UN MALE O-RING, S91-0912	2
13	GA3500147	HYDRAULIC ADAPTOR, NIPPLE, 9/16” JIC MALE X 3/4” UN MALE O-RING, S90-0912	2
14	GA4602930	KNUCKLE, CENTRE SECTION, TILT CYLINDER, TRITECH, MY20	2
15	GA0500071	NUT 1 1/4”, NYLOC, ZP, UNC	4
16	GA5012439	NUT 1” NYLOC UNC ZP	4
17	GA4406820	PLATE, REVERSE LIGHT AND CAMERA MOUNT	1
18	GA5017659	WASHER 1 FLAT ZP HD (5mm THICK)	8
19	GA0500072	WASHER, 1 1/4", FLAT, OD 66 X ID 33.3 X 5mm, ZP	8

Tilt & Fold - 48m

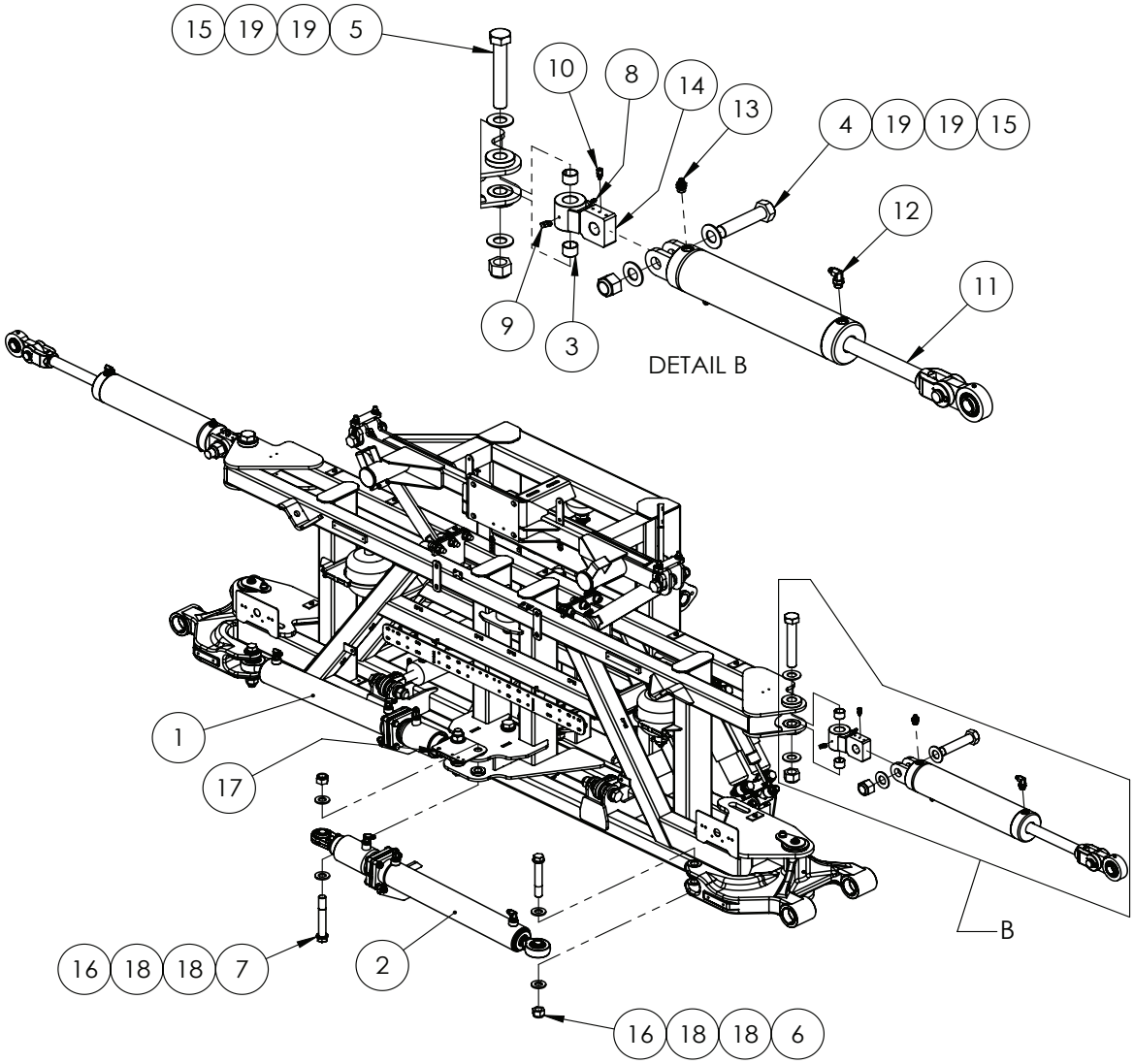

48MT PARALIFT REAR

ITEM NO.	PART NUMBER	DESCRIPTION	QTY.
1	^	ASSEMBLY DRAWING ONLY, HYDRAULIC CYLINDER, FOLD, 48M, G6, MY20 LEFT	1
2	^	ASSEMBLY DRAWING ONLY, HYDRAULIC CYLINDER, FOLD, 48M, G6, MY20 RIGHT	1
3	GA5073725	BEARING, GLACIER BUSH, 1 1/2" ID X 1" LONG	4
4	GA0500073	BOLT, 1 1/4" X 5 1/2" UNC, ZP, GR8	2
5	GA0500138	BOLT, 1 1/4" X 7 1/2" UNC, ZP, GR8	2
6	GA4553238	BOLT, 1" UNC X 6", EN26, ZP	2
7	GA4553243	BOLT, 1" UNC X 6 1/2", EN26, ZP	2
8	GA5050450	GREASE NIPPLE, 6mm	2
9	GA5069995	GREASE FITTING LINE CONNECTOR ELBOW 6mm	2
10	GA5069985	GREASE FITTING LINE CONNECTOR STRAIGHT 6mm	2

^ See Chapter 18 'Hydraulics' for sub-assembly

Continued over page

Tilt & Fold - 48m

ITEM NO.	PART NUMBER	DESCRIPTION	QTY.
11	GA3500835	HYDRAULIC CYLINDER, BORE 4”, ROD 1.5”, STROKE 300mm	2
12	GA3500700	HYDRAULIC ADAPTOR, ELBOW, 90 DEGREE, 9/16” JIC MALE X 3/4” UN MALE O-RING, S91-0912	2
13	GA3500147	HYDRAULIC ADAPTOR, NIPPLE, 9/16” JIC MALE X 3/4” UN MALE O-RING, S90-0912	2
14	GA4602930	KNUCKLE, CENTRE SECTION, TILT CYLINDER, TRITECH, MY20	2
15	GA0500071	NUT 1 1/4”, NYLOC, ZP, UNC	4
16	GA5012439	NUT 1” NYLOC UNC ZP	4
17	GA4406820	PLATE, REVERSE LIGHT AND CAMERA MOUNT	1
18	GA5017659	WASHER 1 FLAT ZP HD (5mm THICK)	8
19	GA0500072	WASHER, 1 1/4”, FLAT, OD 66 X ID 33.3 X 5mm, ZP	8

Hydraulic Manifold Mounting - 36-42m

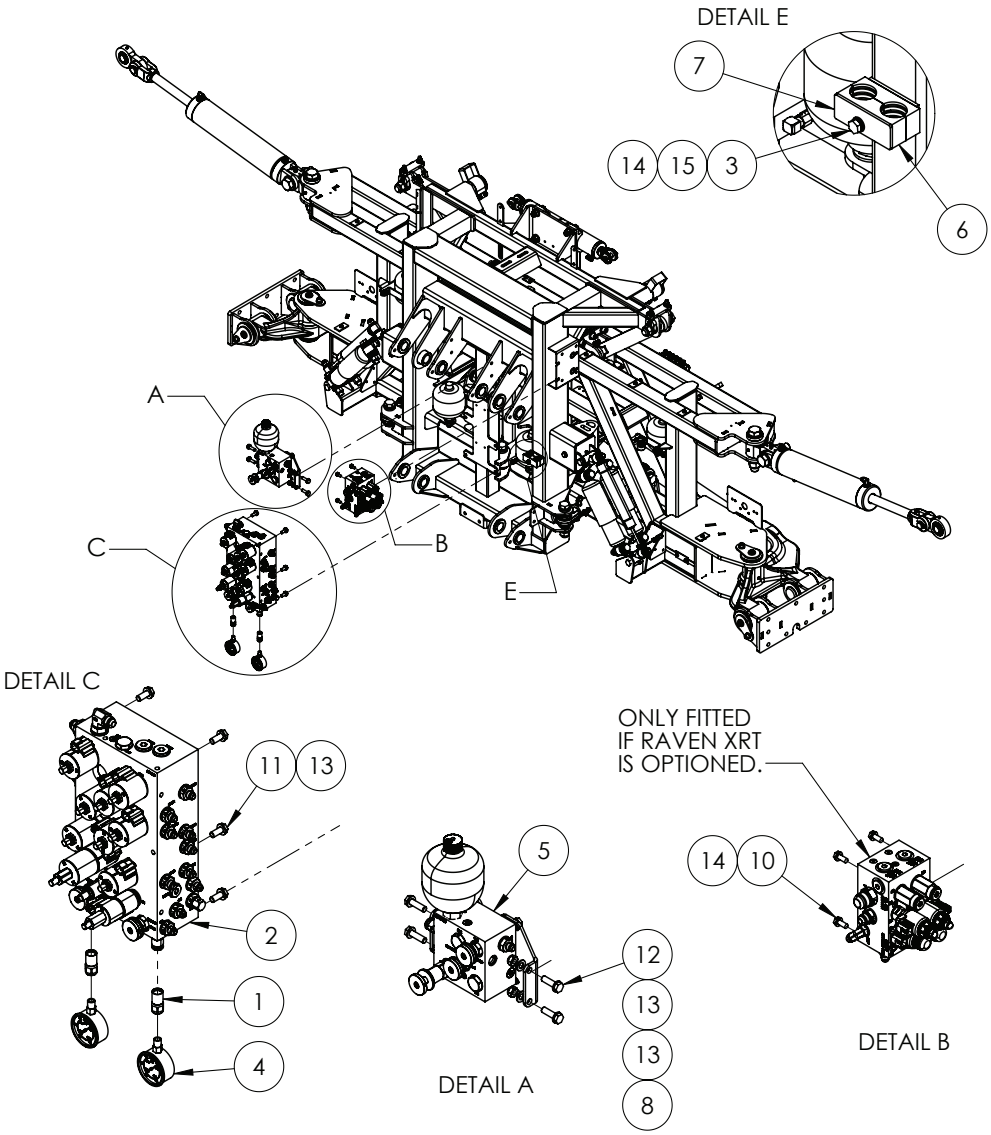

ITEM NO.	PART NUMBER	DESCRIPTION	QTY.
1	GA5077350	ADAPTOR, DIRECT GAUGE, M16 X 2.0 FEMALE X 1/4" BSPP FEMALE, C81-1604	2
2	GA6101260^	ASSEMBLY DRAWING ONLY, HYDRAULIC MANIFOLD ASSEMBLY, BOOM CONTROL, MY20	1
3	GA5004727	BOLT M8 X 50 GR8.8 ZP	1
4	GA5078076	GAUGE, PRESSURE, 250 BAR, 3500PSI	2
5	GA4949530	HYDRAULIC MANIFOLD ASSEMBLY, BREAKAWAY WITH MOUNT PLATE, G6 MY20	1
6	GA5073800	MOUNTING CLAMP, DOUBLE TYPE, JAW, PAIR, GROUP 4, 30mm, BLACK, RCD-30J	1
7	GA5078049	MOUNTING CLAMP, DOUBLE TYPE, PLATE, TOP, GROUP 4, RCD-4PT	1
8	GA5000141	NUT M10 NYLOC ZP	4

^ See Chapter 18 'Hydraulics' for sub-assembly

Continued over page

Hydraulic Manifold Mounting - 36-42m

ITEM NO.	PART NUMBER	DESCRIPTION	QTY.
9	GA4949620	PRODUCTION DRAWING ONLY. VALVE, HYDRAULIC, RAVEN XRT ULTRAGLIDE, LOAD SENSE	1
10	GA5048485	SET SCREW 5/16 BSW X 3/4 SS A2-70	3
11	GA5006161	SET SCREW M10 X 25 GR8.8 ZP	6
12	GA5006111	SET SCREW M10 X 35 GR8.8 ZP	4
13	GA5000117	WASHER 10mm FLAT SS HD	14
14	GA5003643	WASHER 8mm FLAT SS HD	4
15	GA5004919	WASHER 8mm SPRING SS	1

Hydraulic Breakaway Mounting - 36-42m

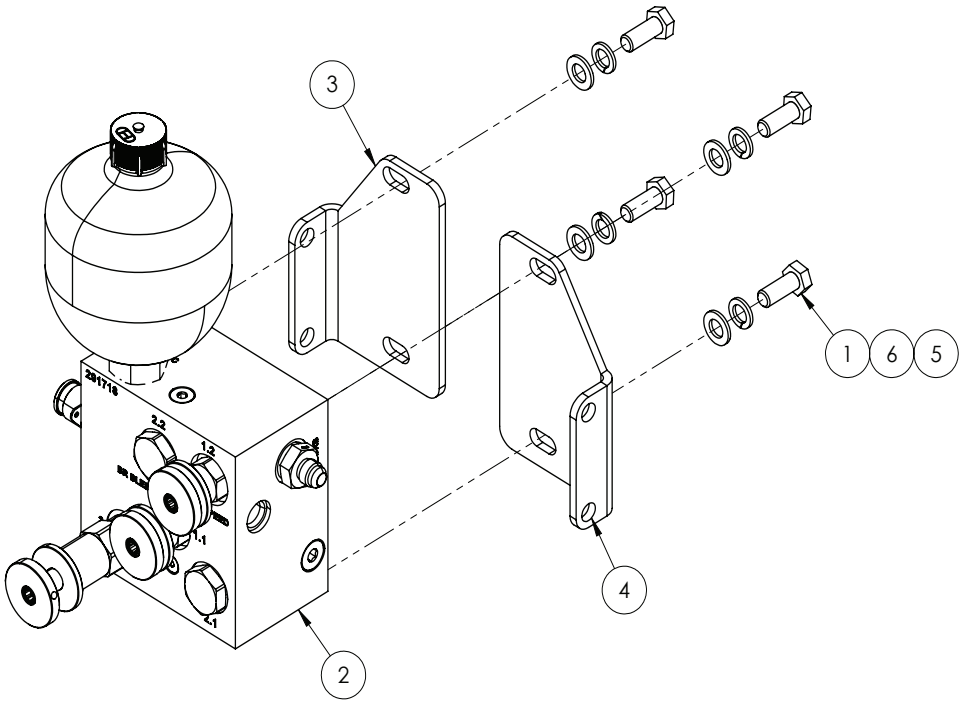

ITEM NO.	PART NUMBER	DESCRIPTION	QTY.
1	GA5006161	BOLT M10 X 25 GR8.8 ZP	4
2 ^	GA3500704	HYDRAULIC MANIFOLD ASSEMBLY, BOOM BREAKAWAY, G6 MY20	1
3	GA4407650	PLATE, PLATE, BREAKAWAY HYDRAULIC MANIFOLD MOUNT, LH, G6 MY20	1
4	GA4407655	PLATE, PLATE, BREAKAWAY HYDRAULIC MANIFOLD MOUNT, RH, G6 MY20	1
5	GA5000117	WASHER 10MM FLAT SS HD	4
6	GA5000137	WASHER 10MM SPRING SS	4

^ See Chapter 18 'Hydraulics' for sub-assembly

Hydraulic Manifold Mounting - 48m

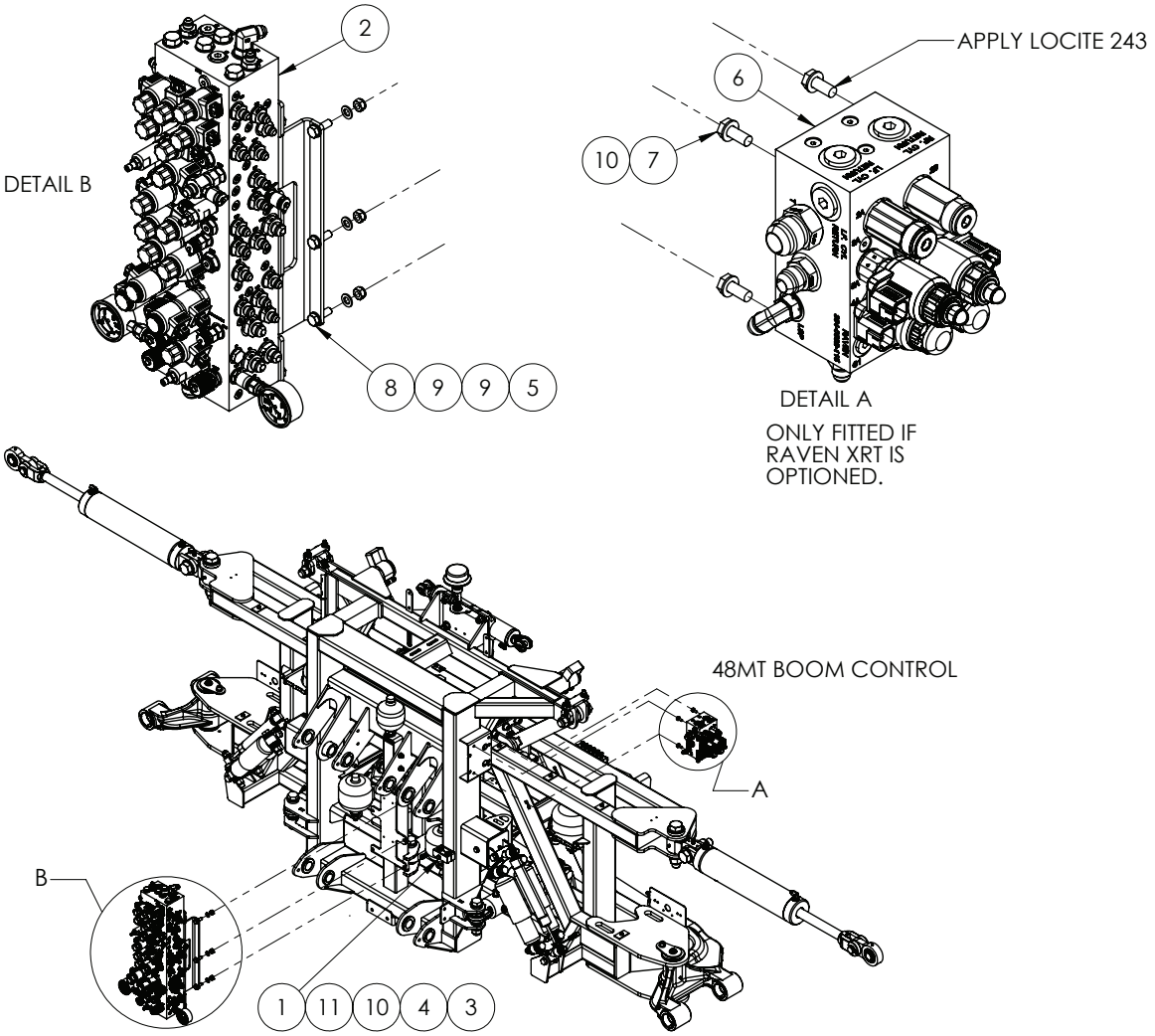

ITEM NO.	PART NUMBER	DESCRIPTION	QTY.
1	GA5004727	BOLT M8 X 50 GR8.8 ZP	1
2	GA4949550	HYDRAULIC CONTROL MANIFOLD ASSEMBLY, 48M BOOM, MY20	1
3	GA5073800	MOUNTING CLAMP, DOUBLE TYPE, JAW, PAIR, GROUP 4, 30mm, BLACK, RCD-30J	1
4	GA5078049	MOUNTING CLAMP, DOUBLE TYPE, PLATE, TOP, GROUP 4, RCD-4PT	1
5	GA5000141	NUT M10 NYLOC ZP	6
6	GA4949620	PRODUCTION DRAWING ONLY. VALVE, HYDRAULIC, RAVEN XRT ULTRAGLIDE, LOAD SENSE	1
7	GA5048485	SET SCREW 5/16 BSW X 3/4 SS A2-70	3
8	GA5065455	SET SCREW M10 X 30 GR8.8 ZP	6
9	GA5000117	WASHER 10mm FLAT SS HD	12
10	GA5003643	WASHER 8mm FLAT SS HD	4
11	GA5004919	WASHER 8mm SPRING SS	1

^ See Chapter 18 'Hydraulics' for sub-assembly

Centre Level - 36-48m

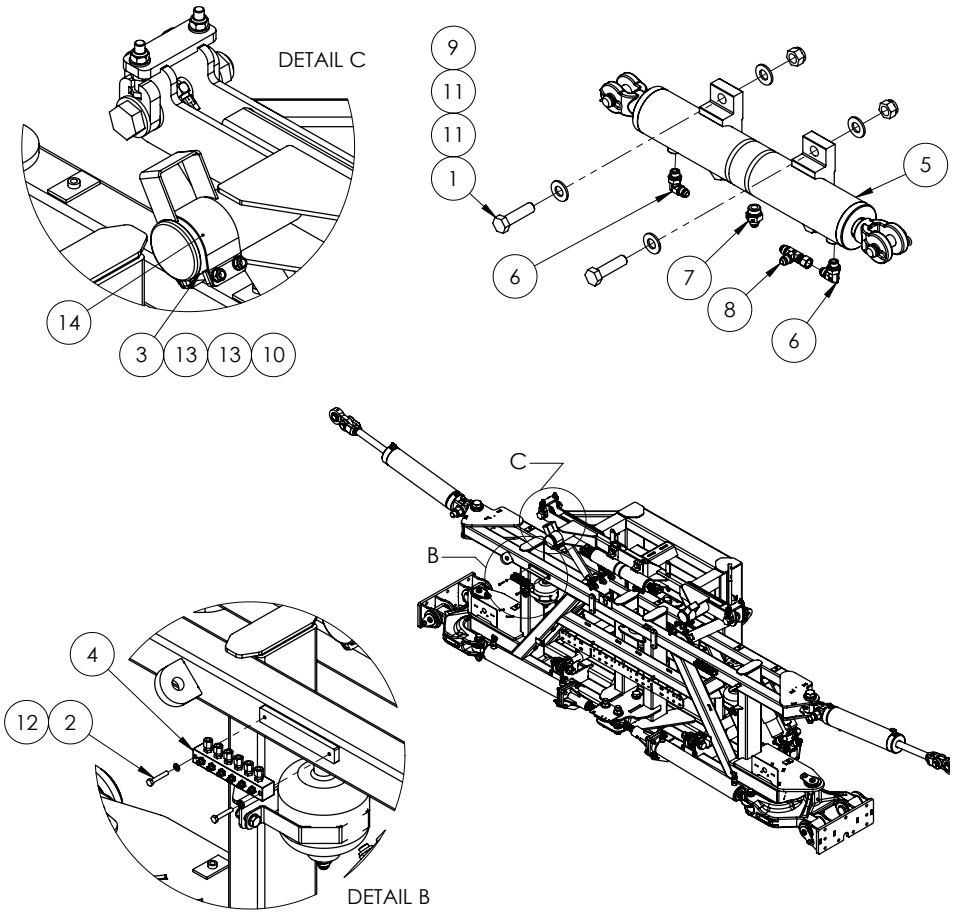

ONLY FITTED IF GREASE
BANK OPTIONED (20062).

ITEM NO.	PART NUMBER	DESCRIPTION	QTY.
1	GA5000941	BOLT M16 X 60 GR8.8 ZP	4
2	GA5011405	BOLT M6 X 35 GR8.8 ZP	4
3	GA5052710	BOLT M8 X 65 GR 8.8 ZP	4
4	GA5070000	GREASE FITTING HEADER BLOCK 6 WAY, INC. 6MM LINE ADAPTORS AND STRAIGHT GREASE NIPPLES AND PLUGS	2
5	GA3500477	HYDRAULIC CYLINDER, BORE 2.5”, ROD 1”, STROKE 110MM, BACK TO BACK	1
6	GA3500716	HYDRAULIC ADAPTOR, ELBOW, 90 DEGREE, 9/16” JIC MALE X 9/16” UN MALE O-RING, S91-0909	2
7	GA3500147	HYDRAULIC ADAPTOR, NIPPLE, 9/16” JIC MALE X 3/4” UN MALE O-RING, S90-0912	1
8	GA3500144	HYDRAULIC ADAPTOR, TEE, 9/16” JIC MALE X 9/16” JIC MALE X 9/16” JIC FEMALE SWIVEL, S67-090909	1
9	GA5001029	NUT M16 NYLOC ZP	4
10	GA5004917	NUT M8 NYLOC ZP	4
11	GA5001043	WASHER 16MM FLAT SS HD	8
12	GA5004437	WASHER 6MM FLAT SS	4
13	GA5003643	WASHER 8MM FLAT SS HD	8
14	GA4506750	WEAR STRIP SS FOR CENTRE LEVELING CABLES	2

~ See Chapter 19 ‘Plumbing’ for sub-assembly

Continued over page

Centre Level Chain Assembly - 36-48m

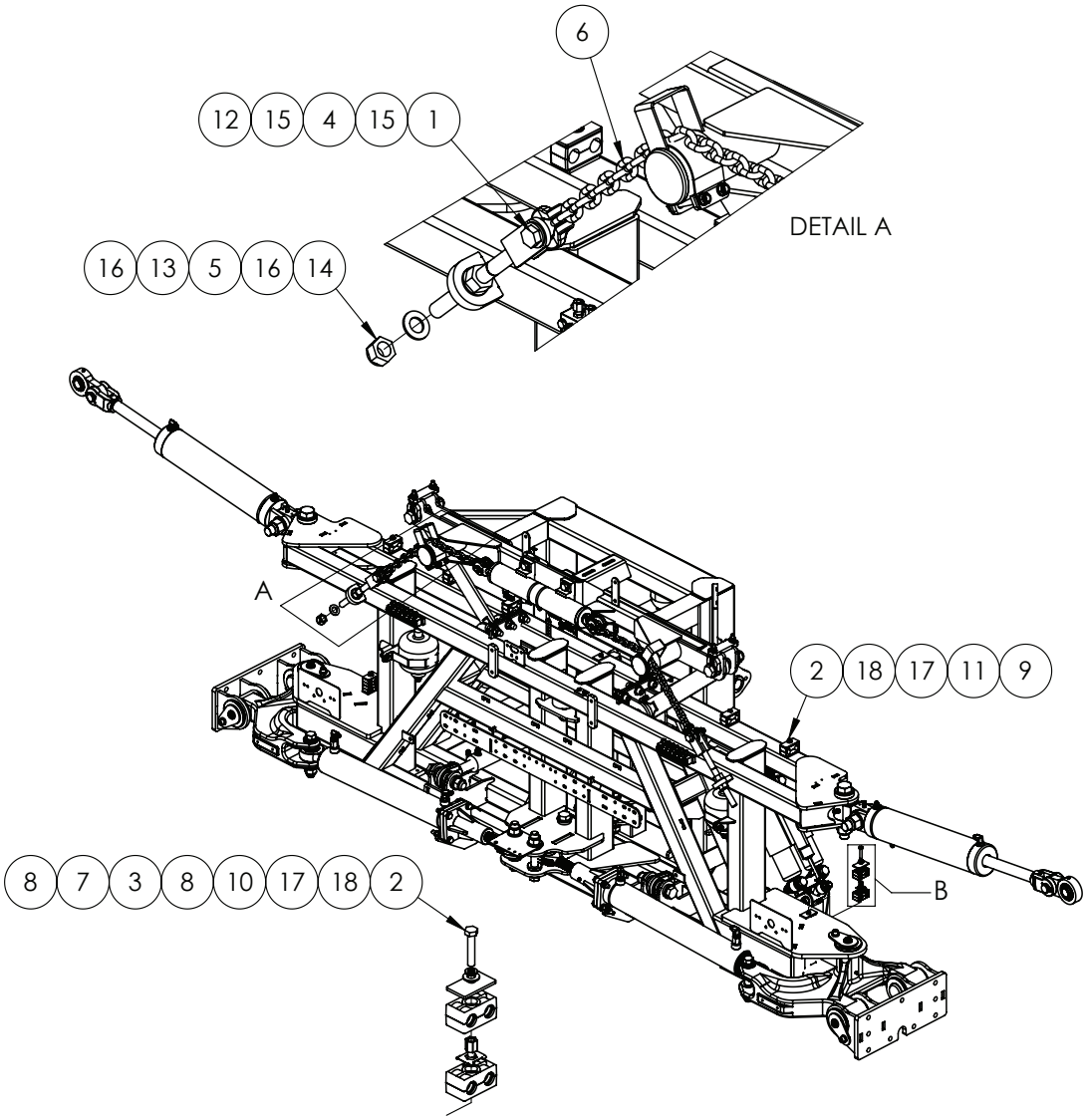

ITEM NO.	PART NUMBER	DESCRIPTION	QTY.
1	GA5000949	BOLT M16 X 70 GR8.8 ZP	2
2	GA5048655	BOLT M8 X 40 GR8.8 ZP	8
3	GA5070740	BUILD UP BOLT, STACKING, M8 X 20, WITH WASHER, HYDAC	2
4	GA4553272	BUSH, CRUSH TUBE, 23OD X 18ID X 22LG, CABLE ADJUSTER SPACER	2
5	GA5020320	CABLE ADJUSTER 20mm THREADED	2
6	GA0500096	CHAIN ASSEMBLY, CENTRE LEVEL, 570mm EYE TO EYE, 8mm WITH EYELETS	2
7	GA5070760	LOCKING PLATE SUIT HYDAC CLAMPS, BUILD UP BOLT, STACKING	2
8	GA3500805	MOUNTING CLAMP, DOUBLE TYPE, JAW, PAIR, SIZE 2, 16mm	4
9	GA5073795	MOUNTING CLAMP, DOUBLE TYPE, JAW, PAIR, GROUP 3, 19mm, BLACK, RCD-19J	6
10	GA5078042	MOUNTING CLAMP, DOUBLE TYPE, PLATE, TOP, GROUP 2, RCD-2PT	2

Continued over page

Centre Level Chain Assembly - 36-48m

ITEM NO.	PART NUMBER	DESCRIPTION	QTY.
11	GA5078046	MOUNTING CLAMP, DOUBLE TYPE, PLATE, TOP,GROUP 3, RCD-3PT	
12	GA5001029	NUT M16 NYLOC ZP	2
13	GA5001709	NUT M20 COARSE ZP	2
14	GA5048125	NUT M20 NYLOC COARSE ZP	2
15	GA5001043	WASHER 16mm FLAT SS HD	4
16	GA5001741	WASHER 20mm FLAT SS HD	4
17	GA5003643	WASHER 8mm FLAT SS HD	8
18	GA5004919	WASHER 8mm SPRING SS	8

Common Components - 36-48m

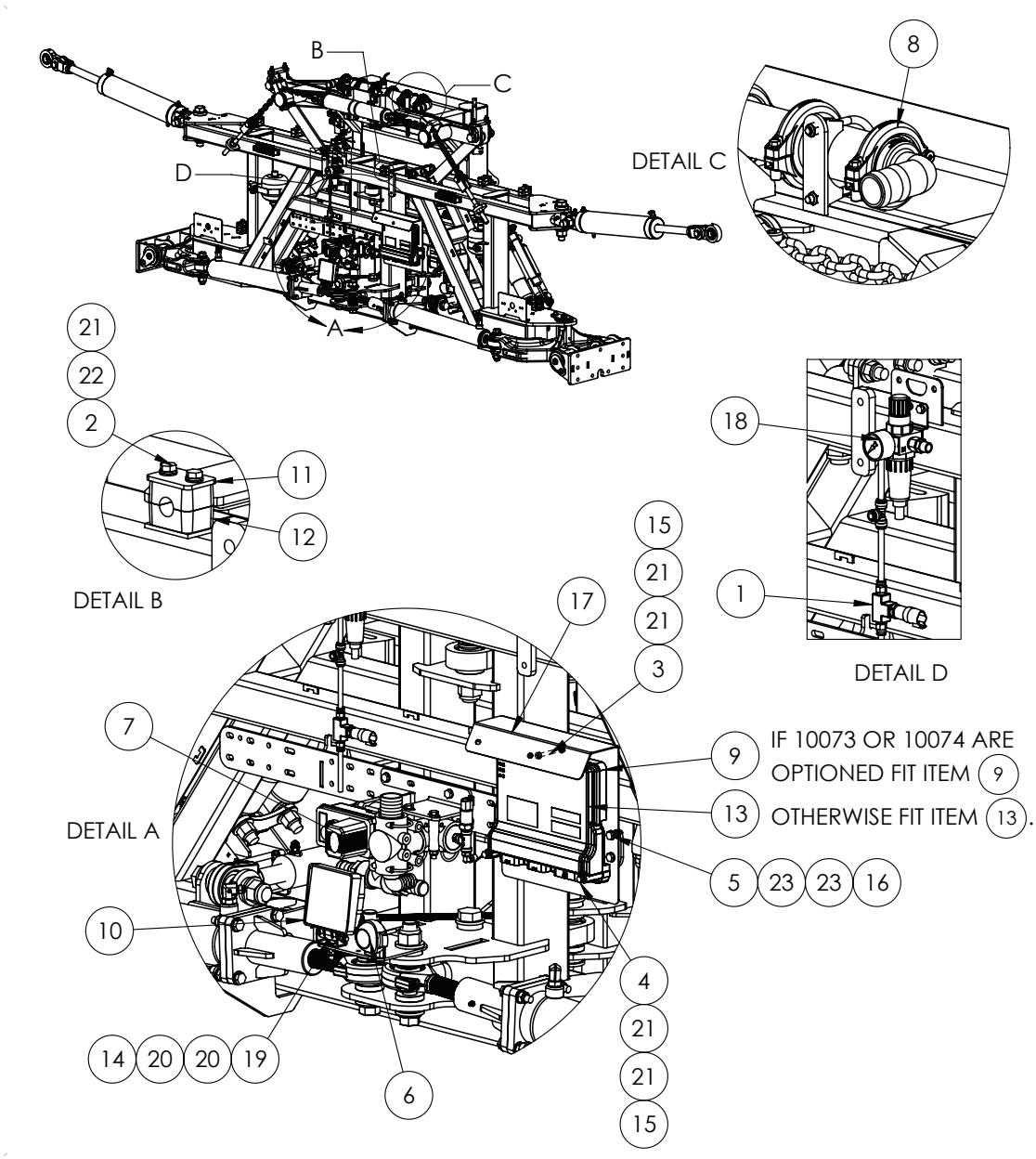

ITEM NO.	PART NUMBER	DESCRIPTION	QTY.
1	GA4949990	AIR LINE PRESSURE SENSOR, SUIT 8mm LINE, RAPID FIRE MONITOR	1
2	GA5004081	BOLT M6 X 40 GR8.8 ZP	2
3	GA5050175	BOLT M6 X 65 GR8.8 ZP	1
4	GA5011439	BOLT M6 X 80 GR8.8 ZP	2
5	GA5004711	BOLT M8 X 25 GR8.8 ZP	4
6	GA3000400	CAMERA, REAR VIEW, 4:3 PAL, 640X480 PX, 188 X 89 DEG, 12-32V, HEATED, IFM	1
7	GA4949455	FLOW DISTRIBUTER AND BOOM RECIRCULATION VALVE ASSEMBLY,G6, MY20	1

Continued over page

Common Components - 36-48m

ITEM NO.	PART NUMBER	DESCRIPTION	QTY.
8	GA4949215	FLOW METER ASSEMBLY, LONG, RAVEN 60P HIGH PULSE WITH DEUTSCH CONNECTOR, 1 1/2" HOSE BARBS, SUIT RCM ISO BUS	1
9	GA3000510	ISO NODE, RCM, HAWKEYE 2 HD, GOLDACRES, RAVEN, 063-0173-956	1
10	GA4913495	LIGHT, POD WORK LIGHT ASSEMBLY, LED, FLOOD BEAM	1
11	GA5078068	MOUNTING CLAMP, SINGLE TYPE, PLATE, TOP, GROUP 2	1
12	GA5078058	MOUNTING CLAMP, SINGLE TYPE, JAW, PAIR, GROUP 3, 14mm, RCS-14J	2
13	GA3000202	NODE, RCM, ISOBUS, RATE CONTROL MODULE, LEVEL 2 3TS UNLOCK, RAVEN, 063-0173-942	1
14	GA5000141	NUT M10 NYLOC ZP	1
15	GA5048115	NUT M6 NYLOC ZP	3
16	GA5004917	NUT M8 NYLOC ZP	4
17	GA4404570	PLATE, MOUNT, RCM NODE	1
18	GA4949595	PRODUCTION DRAWING ONLY. AIR PRESSURE REGULATOR, MY20	1
19	GA5006161	SET SCREW M10 X 25 GR8.8 ZP	1
20	GA5000117	WASHER 10mm FLAT SS HD	2
21	GA5004437	WASHER 6mm FLAT SS	8
22	GA5004447	WASHER 6mm SPRING SS	2
23	GA5003643	WASHER 8mm FLAT SS HD	8

^ See Following Page for sub-assembly

~ See Chapter 19 'Plumbing' for sub-assembly

Air Filter Regulator Assembly

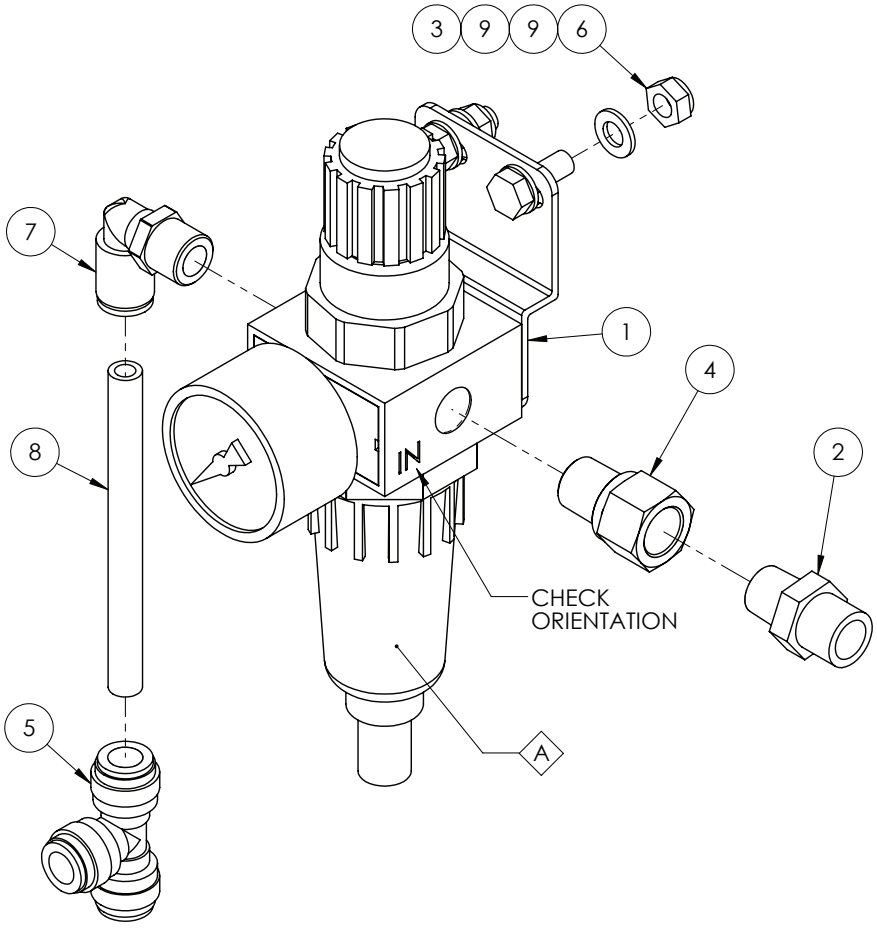

ITEM NO.	PART NUMBER	DESCRIPTION	QTY.
A	GA5054620	BOWL C/W DRAIN, SUIT AIR DRYER / OILER GA5068806	1
1	GA5078550	AIR FILTER REGULATOR, G1/4, SEMI AUTO DRAIN, WITH BRACKET, LEGRIS 6700.04.13	1
2	GA5078517	AIR FITTING, STRAIGHT, 3/8” TUBE, 1/4” NPT MALE, PUSH IN, BRASS, ALKON - AQ68-DOT-6X4	1
3	GA5004041	BOLT M6 X 16 GR8.8 ZP	2
4	GA5024510	BRASS ADAPTOR, 1/4” BSPP MALE TO 1/4” NPT FEMALE	1
5	GA5067010	TEE, EQUAL, 8MM PUSH IN TYPE, BLACK PLASTIC	1
6	GA5048115	NUT M6 NYLOC ZP	2
7	GA5052690	PNEUMATIC FITTING, ELBOW, 90 DEGREE, 1/4 BSP MALE X 8MM PUSH TYPE, METAL	1
8	GA5004382	TUBE, NYLON, 8MM, BLACK, GA5004382 X 90MM	1
9	GA5004437	WASHER 6MM FLAT SS	4

Tilt Sensors - 36-48m

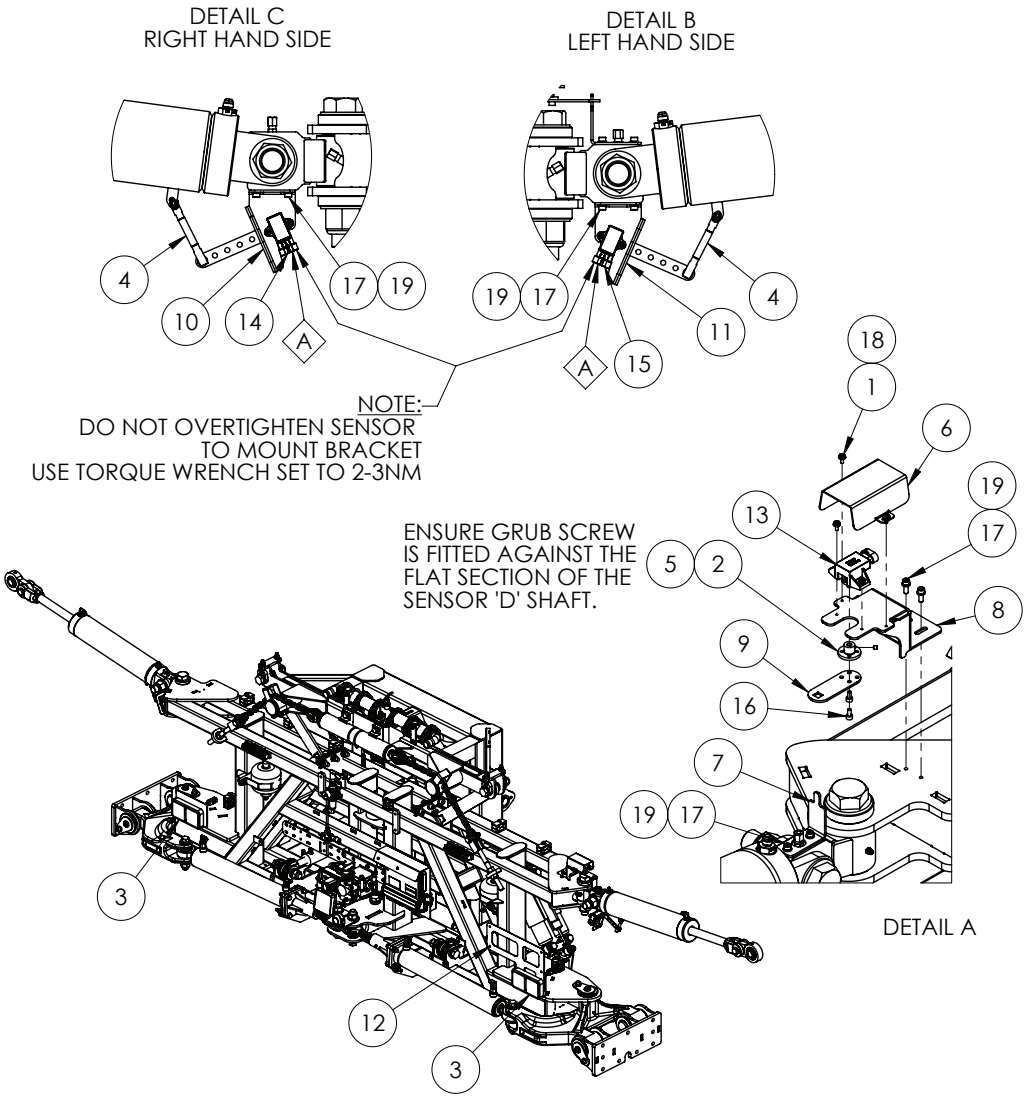

ITEM NO.	PART NUMBER	DESCRIPTION	QTY.
A	GA3000381	ROTARY SENSOR, TILTS, XRT, SENSOR AND MAGNET, RTP050HVNAA, NO GRUB SCREWS, 50 DEGREE	-
1	GA5011360	BOLT PAN HEAD M4 X 10 SS	4
2	GA4552855	BUSH, TILT SENSOR SWITCH, SP 2011	1
3	GA3000249	LED TAIL LIGHT, LARGE WITH CONNECTOR	2
4	GA4551275	LINK ROD, RIDE HEIGHT, G6, MY20	2
5	GA5069970	M5 GRUB SCREW X 5MM LONG S/S	1
6	GA4408175	PLATE, FOLD SENSOR, COVER, TRITECH, MY20	1
7	GA4408375	PLATE, FOLD SENSOR, KNUCKLE MOUNT, TRITECH, MY20	1
8	GA4408170	PLATE, FOLD SENSOR, MOUNT BRACKET. TRITECH, MY20	1
9	GA4408370	PLATE, FOLD SENSOR, SENSOR ARM, TRITECH, MY20	1
10	GA4408380	PLATE, TILT SENSOR, KNUCKLE SENSOR MOUNT LH,TRITECH, MY20	1

Continued over page

Tilt Sensors - 36-48m

ITEM NO.	PART NUMBER	DESCRIPTION	QTY.
11	GA4408395	PLATE, TILT SENSOR, KNUCKLE SENSOR MOUNT RH, TRITECH, MY20	1
12	GA4504300	PLATE, NUMBER PLATE MOUNT, BOLT ON, SUIT TAIL LIGHT, SP 2011 ON	1
13	GA5069457	POTENTIOMETER, 120 DEGREE, ELOBAU, GATMC	1
14	GA3000378	ROTARY SENSOR KIT, WITH LOOSE HARDWARE, RTP, 50 DEGREE, RAVEN XRT, 11170235009	1
15	GA3000378	ROTARY SENSOR KIT, WITH LOOSE HARDWARE, RTP, 50 DEGREE, RAVEN XRT, 11170235009	1
16	GA5069975	SHCS M5 X 10 SS A2-70	2
17	GA5004049	SHCS M6 X 16 GR12.9 ZP	8
18	GA5020510	WASHER 4mm FLAT SS	4
19	GA5004437	WASHER 6mm FLAT SS	8

Raven XRT Module - 36-48m

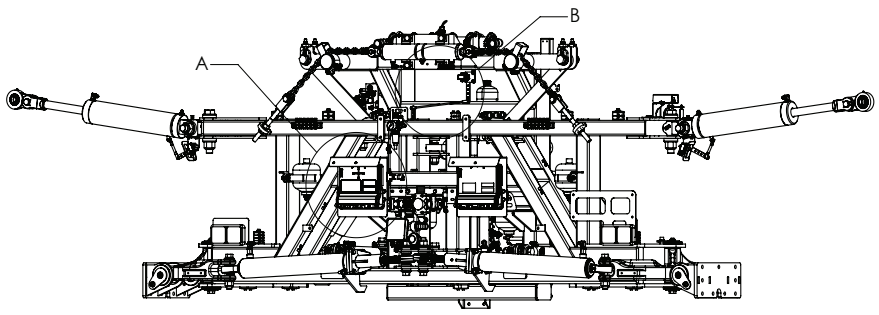

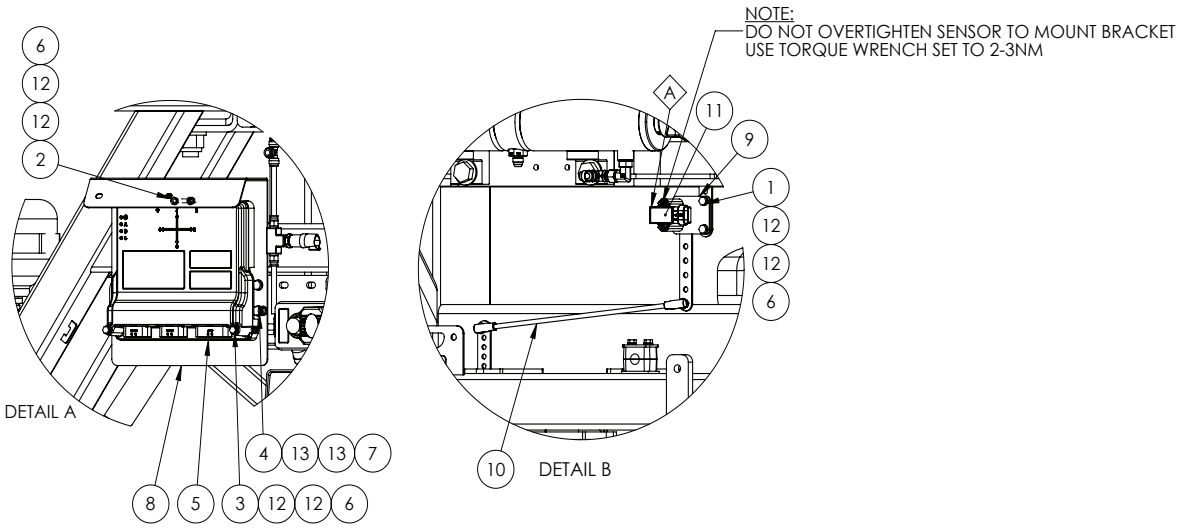

ITEM NO.	PART NUMBER	DESCRIPTION	QTY.
A	GA3000381	ROTARY SENSOR, TILTS, XRT, SENSOR AND MAGNET, RTP050HVNAA, NO GRUB SCREWS, 50 DEGREE	-
1	GA5004065	BOLT M6 X 20 GR8.8 ZP	2
2	GA5050175	BOLT M6 X 65 GR8.8 ZP	1
3	GA5011439	BOLT M6 X 80 GR8.8 ZP	2
4	GA5004713	BOLT M8 X 25 SS A2-70	4
5	GA3000371	ECU, ISOBUS, RAVEN EXPANSION MODULE, REM, XRT 063-0173-965	1
6	GA5048115	NUT M6 NYLOC ZP	5
7	GA5004917	NUT M8 NYLOC ZP	4
8	GA4404570	PLATE, MOUNT, RCM NODE	1
9	GA4406430	PLATE, MOUNT, RAVEN SLANT ANGLE SENSOR	1
10	GA4551340	ROD, THREADED M6, 300MM LONG, SUIT ROLL ANGLE SENSOR XRT	1
11	GA3000378	ROTARY SENSOR KIT, WITH LOOSE HARDWARE, RTP, 50 DEGREE, RAVEN XRT, 117-0235-009	1
12	GA5004437	WASHER 6MM FLAT SS	10
13	GA5003643	WASHER 8MM FLAT SS HD	8

Boom , Manifold Cover 36 - 42mtr

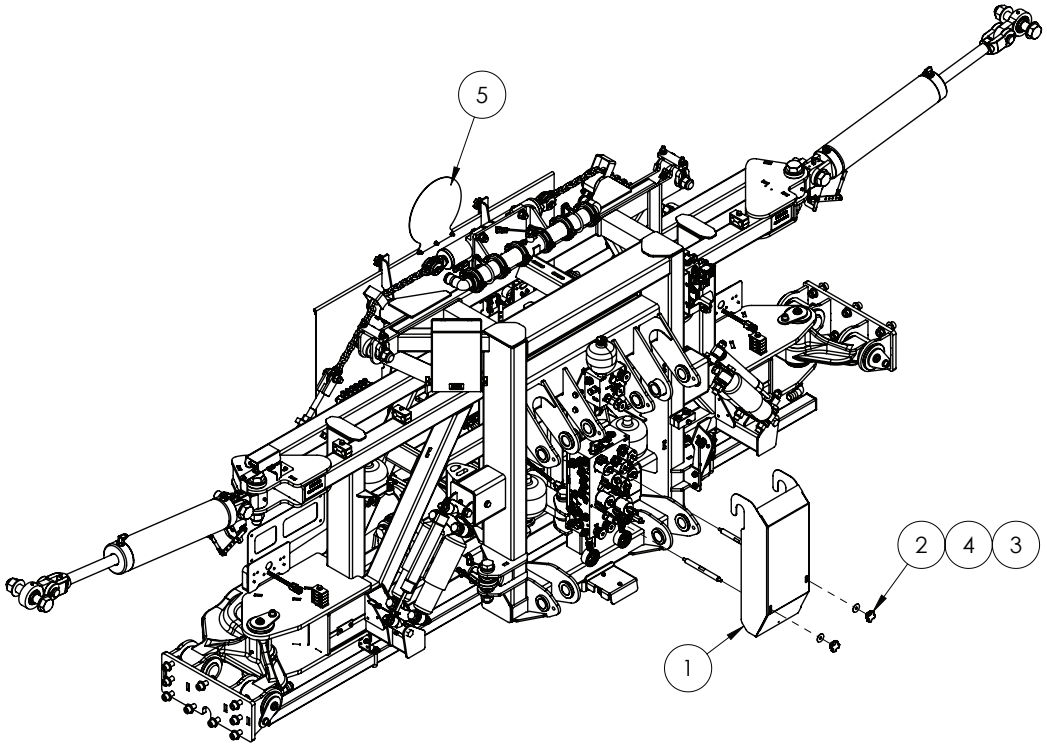

ITEM NO.	PART NUMBER	DESCRIPTION	QTY.
1	GA4409050	COVER, CENTRE MANIFOLD COVER, RIVX, SUIT 36-42M	1
2	GA5069875	KNOB, STAR GRIP NUT, M8 X 40 DIAMETER	2
3	GA4551600	LINK, CENTRE MANIFOLD COVER, SPACER ROD, RIVX, SUIT 36-42M	2
4	GA5003645	WASHER 5/16 ID X 1 1/4 OD FLAT SS	2
5	^	PRODUCTION DRAWING ONLY, OVER SIZE SIGN, ASSEMBLY, RIVX	1

^ See Following Page for sub-assembly

Boom , Manifold Cover 48mtr

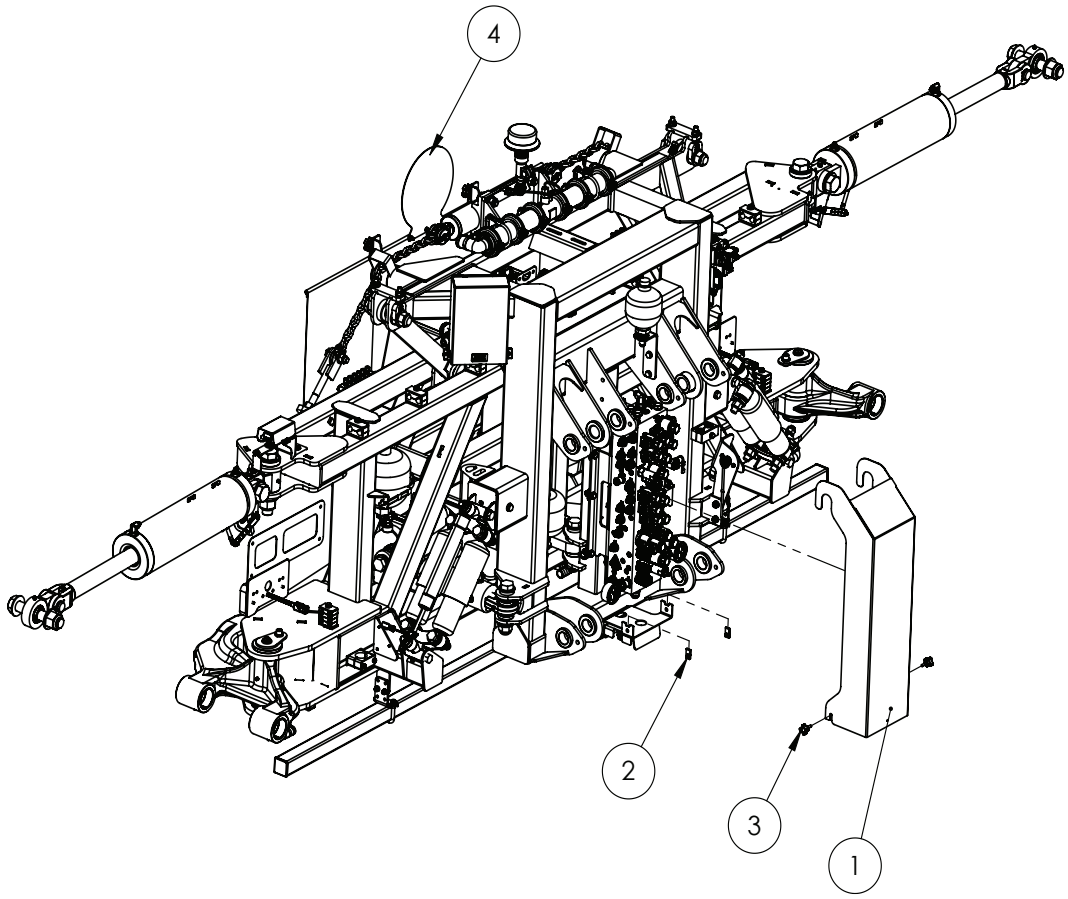

ITEM NO.	PART NUMBER	DESCRIPTION	QTY.
1	GA4409120	COVER, CENTRE MANIFOLD DEFLECTOR, TRITECH MY20, SUIT 48M	1
2	GA5066830	SPEED CLIP M6	2
3	GA5069965	STAR KNOB 40 OD-M6 X 20MM	2
4	^	PRODUCTION DRAWING ONLY, OVER SIZE SIGN, ASSEMBLY, RIVX	

^ See Following Page for sub-assembly

Bracket, Nudge Bar Mount, Inner End, Tri-Tech 36-42mtr

Up to S/N 203880

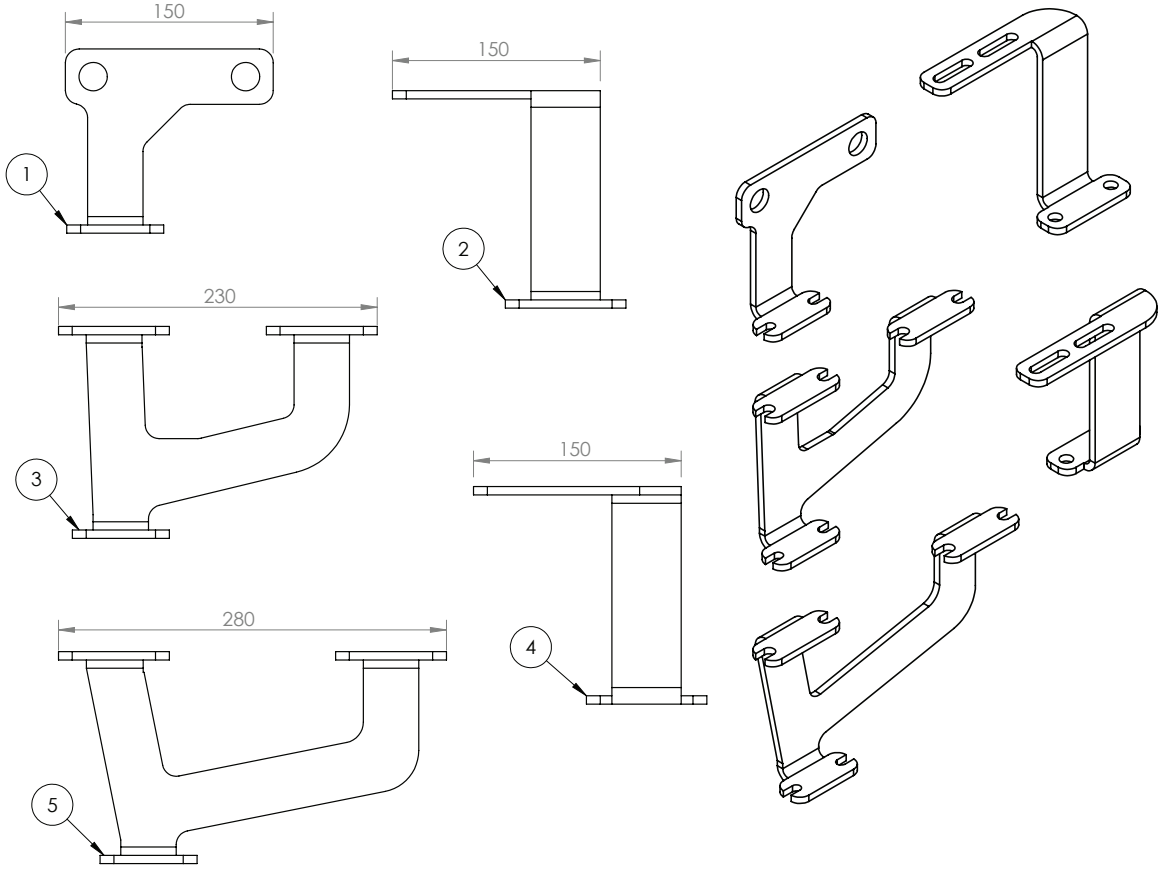

ITEM NO.	PART NUMBER	DESCRIPTION	QTY.
1	GA4406135	PLATE, BOOM NUDGE BAR MOUNT, INNER END, TRITECH, MY20	1
2	GA4407320	BRACKET, SPRAY BAR MOUNT A, TRITECH CENTRE SECTION, MY20	1
3	GA4406130	PLATE, BOOM NUDGE BAR MOUNT, OUTER, TRITECH, MY20	1
4	GA4407325	BRACKET, SPRAY BAR MOUNT B, TRITECH CENTRE SECTION, MY20	1
5	GA4406125	PLATE, BOOM NUDGE BAR MOUNT, INNER, TRITECH, MY20	1

Aluminium Spray Bar 36-42mtr

From S/N 203881

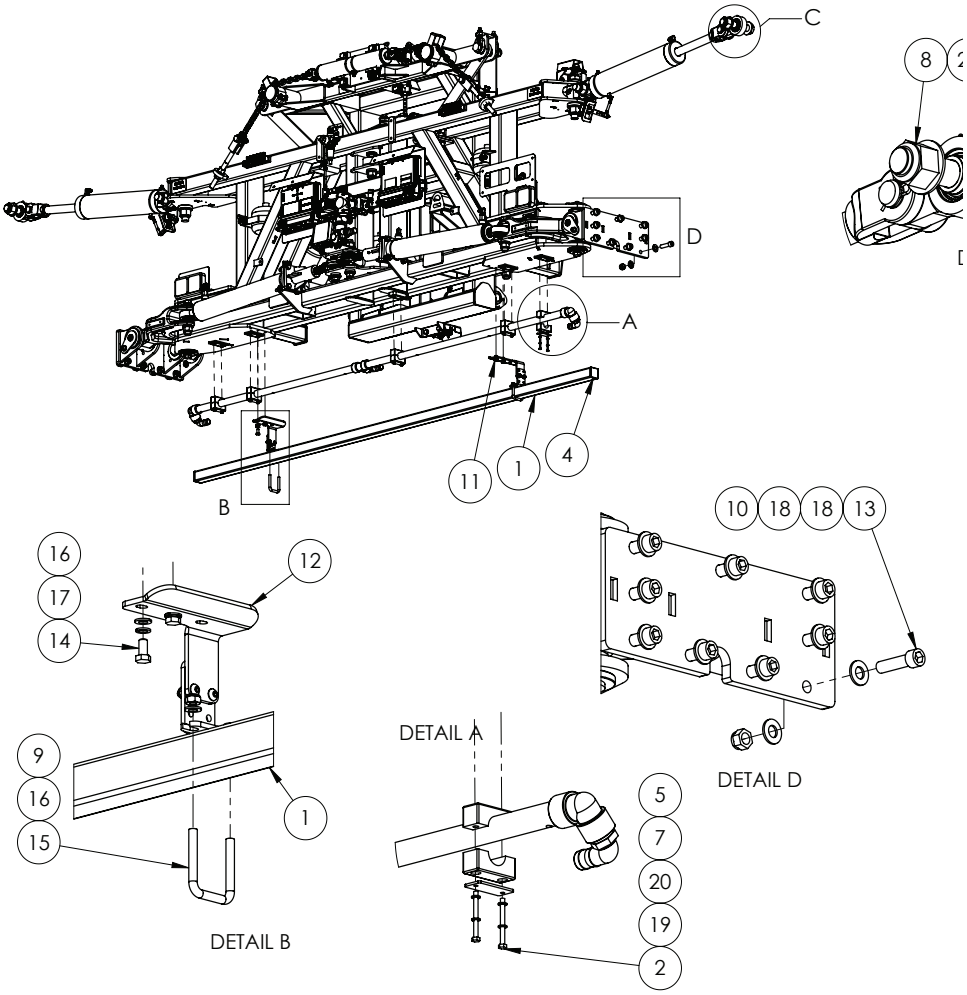

ITEM NO.	PART NUMBER	DESCRIPTION	QTY.
1	GA5072175	ALUMINIUM SQUARE HOLLOW EXTRUSION, 50 X 50 X 3, RADIUS EDGE, RHS, 6351 T5, 7M	2.75
2	GA5050175	BOLT M6 X 65 GR8.8 ZP	14
3	GA0500074	BOLT, 1 1/4" X 7" UNC, ZP, GR8	2
4	GA5024720	END CAP, PLASTIC, BLACK, INSERT, RHS. 50 X 50, 2.4 - 4.0mm WALL	2
5	GA3500699	MOUNTING CLAMP, SINGLE TYPE, JAW, PAIR, GROUP 5, 33.7mm, RCS-33.5J	5
6	GA5078070	MOUNTING CLAMP, SINGLE TYPE, JAW, PAIR, GROUP 5, 38mm, RCS-38J	2
7	GA5078075	MOUNTING CLAMP, SINGLE TYPE, PLATE, TOP, GROUP 5, RCS-5PT	7
8	GA0500071	NUT 1 1/4", NYLOC, ZP, UNC	2
9	GA5051445	NUT M10 NYLOC SS	4
10	GA5001029	NUT M16 NYLOC ZP	18
11	^	PRODUCTION DRAWING ONLY, NOZZLE GUARD MOUNTING, RIVX BOOM, CENTRE SECTION, LHS	1

^ See Following Page for sub-assembly

Continued over page

Aluminium Spray Bar 36-42mtr

ITEM NO.	PART NUMBER	DESCRIPTION	QTY.
12	^	PRODUCTION DRAWING ONLY, NOZZLE GUARD MOUNTING, RIVX BOOM, CENTRE SECTION, RHS	1
13	GA5048680	SHCS M16 X 60 GR12.9 ZP	18
14	GA5006113	SET SCREW M10 X 20 GR8.8 ZP	4
15	GA5053645	U BOLT SQUARE TOP M10 X 52 X 75	2
16	GA5000117	WASHER 10mm FLAT SS HD	8
17	GA5000137	WASHER 10mm SPRING SS	4
18	GA5001043	WASHER 16mm FLAT SS HD	36
19	GA5004437	WASHER M6 FLAT SS HD	14
20	GA5004447	WASHER M6 SPRING SS	14
21	GA0500072	WASHER, 1 1/4", FLAT, OD 66 X ID 33.3 X 5mm, ZP	4

^ See Following Page for sub-assembly

Mounting Bracket LH - Nozzle Guard - Centre - 36-42m

From S/N 203881

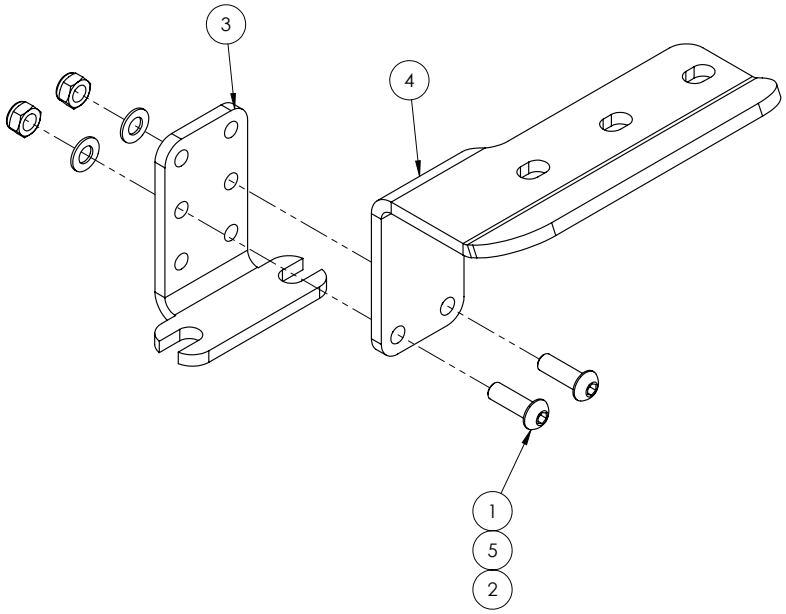

ITEM NO.	PART NUMBER	DESCRIPTION	QTY.
1	GA5011473	BHCS M8 X 25 SS A2-70	2
2	GA5052590	NUT M8 NYLOC SS	2
3	GA4415535	PLATE, BOOM NUDGE BAR MOUNT, ADJUSTIBLE, LOWER, CENTRE SECTION, TRITECH	1
4	GA4000126	PLATE, NUDGE BAR MOUNT, CENTRE SECTION, RHS, RIVX	1
5	GA5003651	WASHER M8 FLAT SS	2

Mounting Bracket RH - Nozzle Guard - Centre 36-42m

From S/N 203881

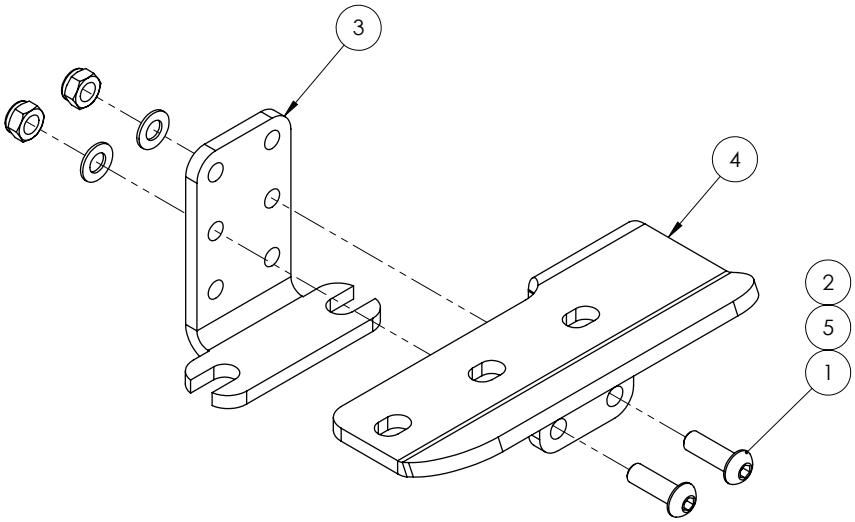

ITEM NO.	PART NUMBER	DESCRIPTION	QTY.
1	GA5011473	BHCS M8 X 25 SS A2-70	2
2	GA5052590	NUT M8 NYLOC SS	2
3	GA4415535	PLATE, BOOM NUDGE BAR MOUNT, ADJUSTIBLE, LOWER, CENTRE SECTION, TRITECH	1
4	GA4000127	PLATE, NUDGE BAR MOUNT, CENTRE SECTION, LHS, RIVX	1
5	GA5003651	WASHER M8 FLAT SS	2

Aluminium Spray Bar - 48mtr - From S/N 203881

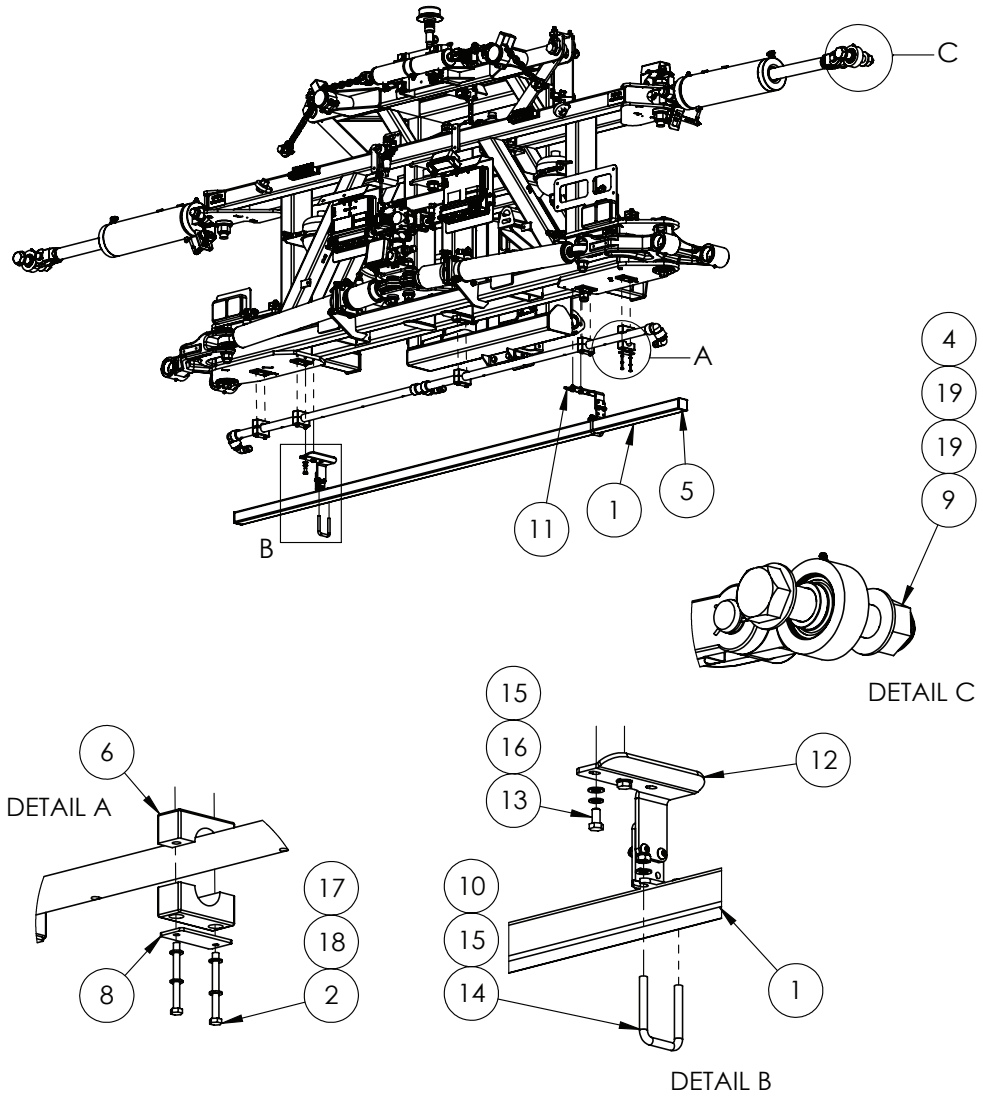

ITEM NO.	PART NUMBER	DESCRIPTION	QTY.
1	GA5072175	ALUMINIUM SQUARE HOLLOW EXTRUSION, 50 X 50 X 3, RADIUS EDGE, RHS, 6351 T5, 7M	2.75
2	GA5050175	BOLT M6 X 65 GR8.8 ZP	6
3	GA5050175	BOLT M6 X 65 GR8.8 ZP	4
4	GA0500074	BOLT, 1 1/4" X 7" UNC, ZP, GR8	2
5	GA5024720	END CAP, PLASTIC, BLACK, INSERT, RHS. 50 X 50, 2.4 - 4.0mm WALL	2
6	GA3500699	MOUNTING CLAMP, SINGLE TYPE, JAW, PAIR, GROUP 5, 33.7mm, RCS-33.5J	3
7	GA5078070	MOUNTING CLAMP, SINGLE TYPE, JAW, PAIR, GROUP 5, 38mm, RCS-38J	2
8	GA5078075	MOUNTING CLAMP, SINGLE TYPE, PLATE, TOP, GROUP 5, RCS-5PT	5
9	GA0500071	NUT 1 1/4", NYLOC, ZP, UNC	2
10	GA5051445	NUT M10 NYLOC SS	4

Continued over page

Aluminium Spray Bar - 48mtr

ITEM NO.	PART NUMBER	DESCRIPTION	QTY.
11	^	PRODUCTION DRAWING ONLY, NOZZLE GUARD MOUNTING, RIVX BOOM, CENTRE SECTION, LHS	1
12	^	PRODUCTION DRAWING ONLY, NOZZLE GUARD MOUNTING, RIVX BOOM, CENTRE SECTION, RHS	1
13	GA5006113	SET SCREW M10 X 20 GR8.8 ZP	4
14	GA5053645	U BOLT SQUARE TOP M10 X 52 X 75	2
15	GA5000117	WASHER 10mm FLAT SS HD	8
16	GA5000137	WASHER 10mm SPRING SS	4
17	GA5004437	WASHER M6 FLAT SS HD	10
18	GA5004447	WASHER M6 SPRING SS	10
19	GA0500072	WASHER, 1 1/4", FLAT, OD 66 X ID 33.3 X 5mm, ZP	4

Mounting Bracket LH - Nozzle Guard - Centre - 48m

From S/N 203881

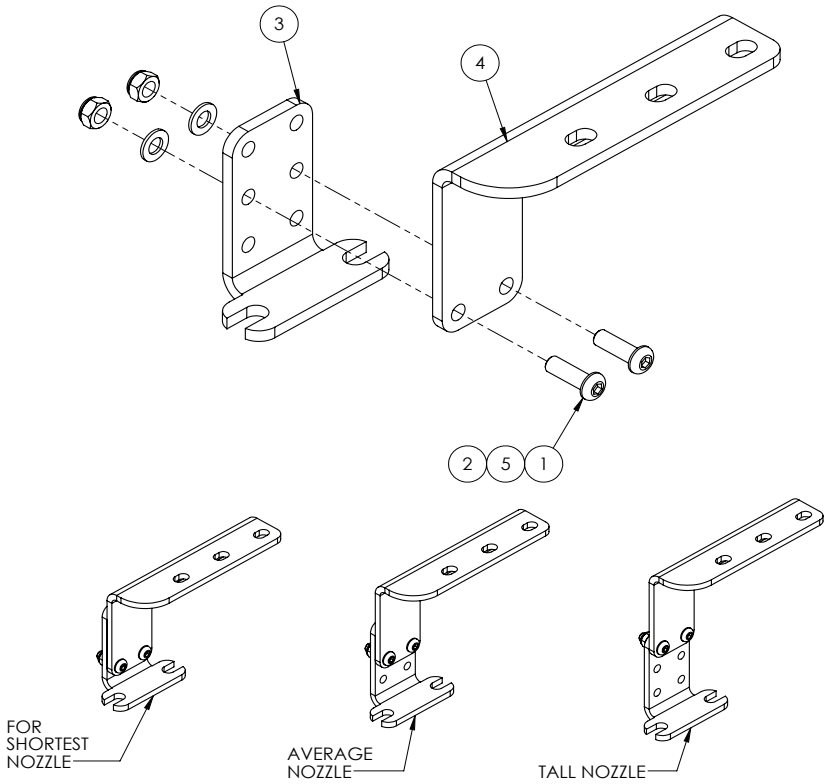

ITEM NO.	PART NUMBER	DESCRIPTION	QTY.
1	GA5011473	BHCS M8 X 25 SS A2-70	2
2	GA5052590	NUT M8 NYLOC SS	2

Mounting Bracket LH - Nozzle Guard - Centre - 48m

ITEM NO.	PART NUMBER	DESCRIPTION	QTY.
3	GA4415535	PLATE, BOOM NUDGE BAR MOUNT, ADJUSTIBLE, LOWER, CENTRE SECTION, TRITECH	1
4	GA4415530	PLATE, BOOM NUDGE BAR MOUNT, ADJUSTIBLE, TOP, CENTRE SECTION, RHS, TRITECH	1
5	GA5003651	WASHER 8mm FLAT SS	2

Mounting Bracket RH - Nozzle Guard - Centre - 48m

From S/N 203881

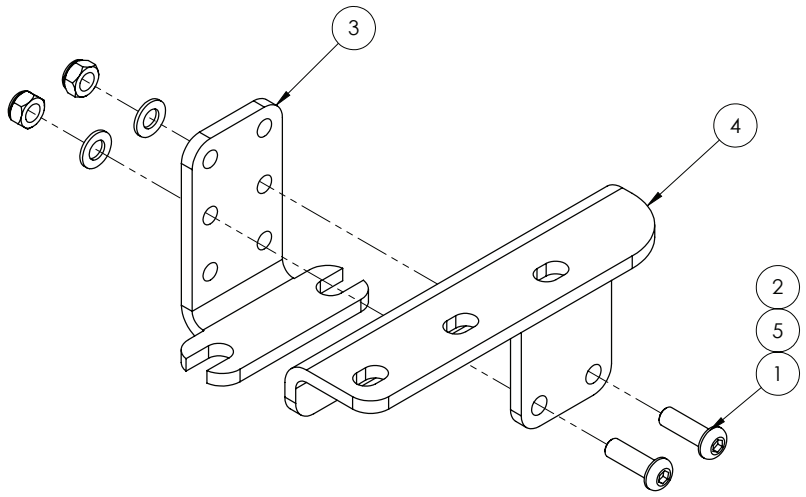

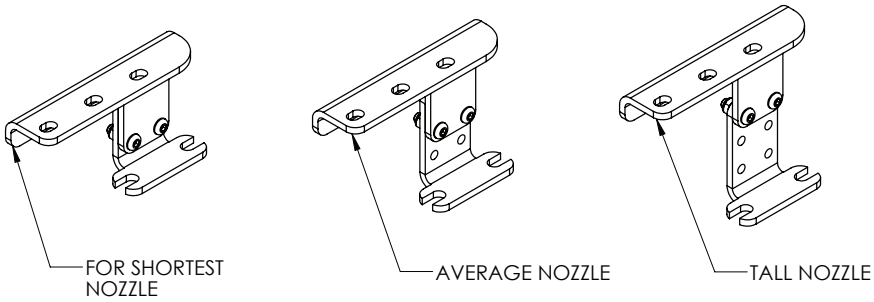

ITEM NO.	PART NUMBER	DESCRIPTION	QTY.
1	GA5011473	BHCS M8 X 25 SS A2-70	2
2	GA5052590	NUT M8 NYLOC SS	2
3	GA4415535	PLATE, BOOM NUDGE BAR MOUNT, ADJUSTIBLE, LOWER, CENTRE SECTION, TRITECH	1
4	GA4415525	PLATE, BOOM NUDGE BAR MOUNT, ADJUSTIBLE, TOP, CENTRE SECTION, LHS, TRITECH	1
5	GA5003651	WASHER 8mm FLAT SS	2

Signage - 36-48m (Old Style)

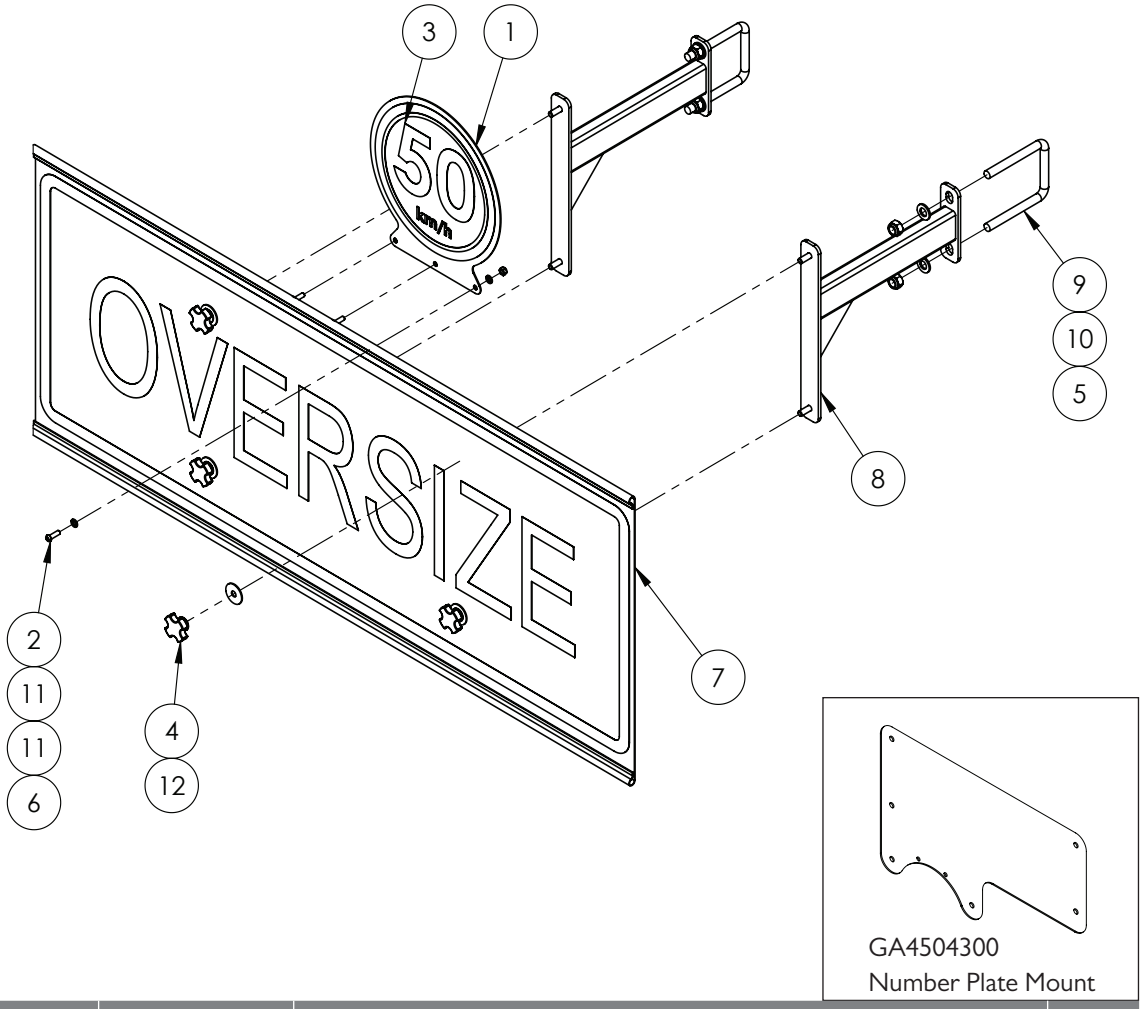

ITEM NO.	PART NUMBER	DESCRIPTION	QTY.
1	F70906A	PLATE, MAXIMUM ROAD SPEED WARNING STICKER, SUIT SP	1
2	GA5004053	BHCS M6 X 20 SS A2-70	3
3	GA5063830	DECAL, 50KPH SIGN	1
4	GA5069875	KNOB, STAR GRIP NUT, M8 X 40 DIAMETER	4
5	GA5012461	NUT M12 NYLOC ZP	4
6	GA5048115	NUT M6 NYLOC ZP	3
7	GA5009613	OVERSIZE SIGN, YELLOW, REFLECTIVE WITH FOLDED EDGES	1
8	GA4658150	BRACKET, OVERSIZE SIGN MOUNT ARM, BOLT ON, 2011 CENTRE	2
9	GA5011259	U BOLT SQUARE TOP M12 X 76MM X 110MM	2
10	GA5000577	WASHER 12MM FLAT SS HD	6
11	GA5004437	WASHER 6MM FLAT SS	6
12	GA5003645	WASHER 5/16 ID X 1 1/4 OD FLAT SS	4

Signage - 36-48m (New Style)

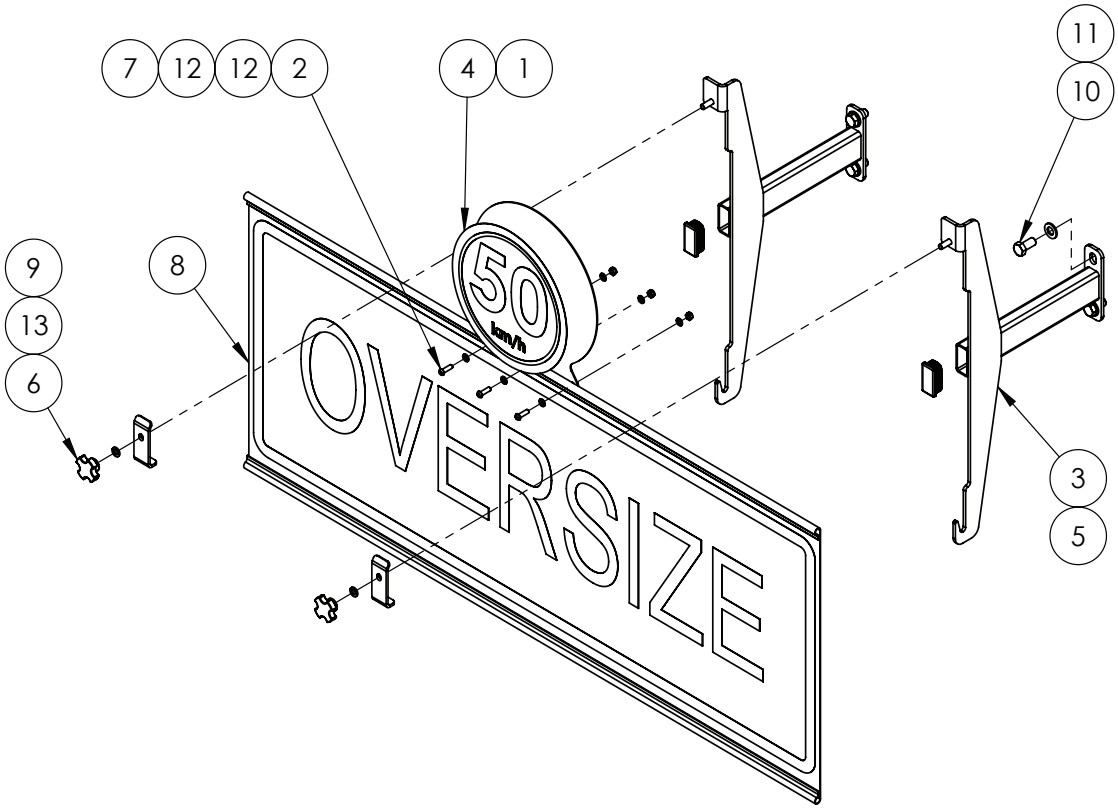

ITEM NO.	PART NUMBER	DESCRIPTION	QTY.
1	F70906A	50km/H STICKER HOLDER PLATE 1.6mm SS	1
2	GA5004053	BHCS M6 X 20 SS A2-70	3
3	GA4605053	BRACKET, OVERSIZE SIGN MOUNT	2
4	GA5063830	DECAL, 50km/H	1
5	GA5003733	END CAP, 50X25 RHS	2
6	GA5069875	KNOB-STAR GRIP M8 X 40 DIA	2
7	GA5048115	NUT M6 NYLOC ZP	3
8	GA5009613	OVERSIZE SIGN, YELLOW, REFLECTIVE WITH FOLDED EDGES	1
9	GA4000255	PLATE, OVERSIZE SIGN CLAMP	2
10	GA5011229	SET SCREW M12 X 25 GR8.8 ZP	4
11	GA5000577	WASHER 12mm FLAT SS HD	4
12	GA5004437	WASHER 6mm FLAT SS	6
13	GA5004919	WASHER M8 SPRING SS	2

Manual Grease Station - 36-48m

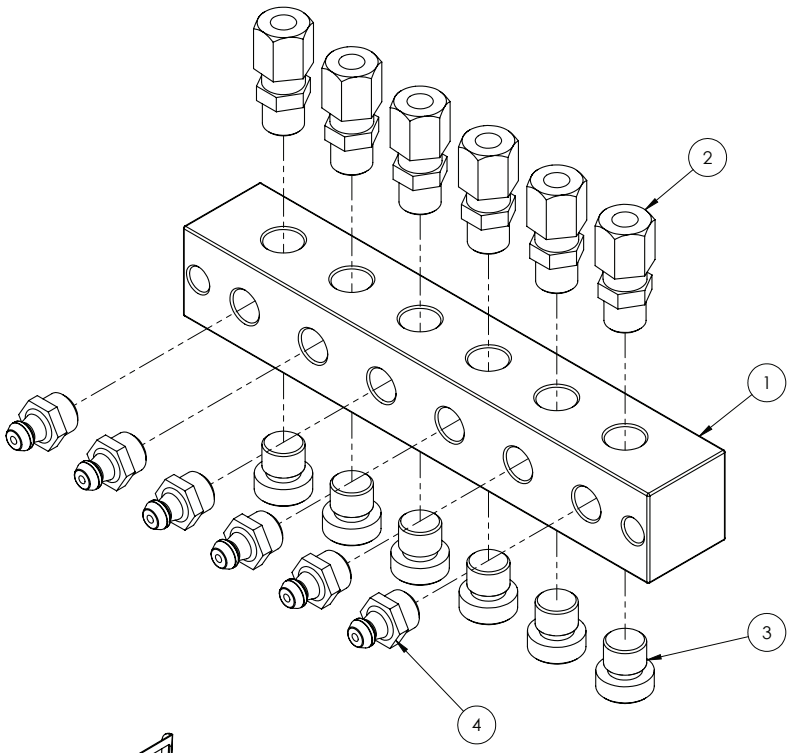

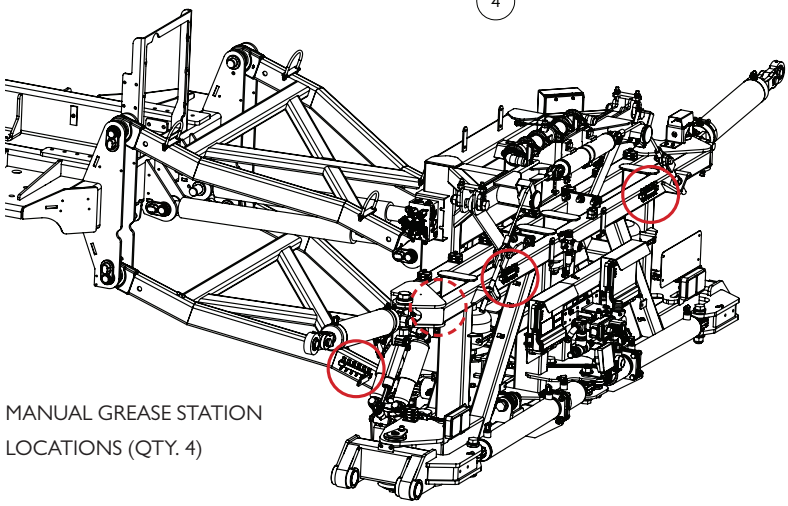

MANUAL GREASE STATION
LOCATIONS (QTY. 4)

GREASE BLOCK & LINE

PART NUMBER	DESCRIPTION
GA5070000	GREASE FITTING HEADER BLOCK 6 WAY, INCLUDING 6MM LINE ADAPTORS AND STRAIGHT GREASE NIPPLES AND PLUGS
GA5070005	GREASE LINE 6MM PRE FILLED - SPECIFY LENGTH REQUIRED

ITEM NO.	PART NUMBER	DESCRIPTION	QTY.
1	-	NOT AVAILABLE SEPARATELY	-
2	GA5055225	PNEUMATIC FITTING, STRAIGHT ADAPTOR, 1/8” BSP MALE THREAD X NUT RETAINER SUIT 6MM TUBE	6
3	-	NOT AVAILABLE SEPARATELY	-
4	GA5069980	GREASE NIPPLE STRAIGHT 1/8" BSP	6

Quantities shown are per block.

Chapter 14

BOOM WING

36-42m - Fold Pivot Assembly

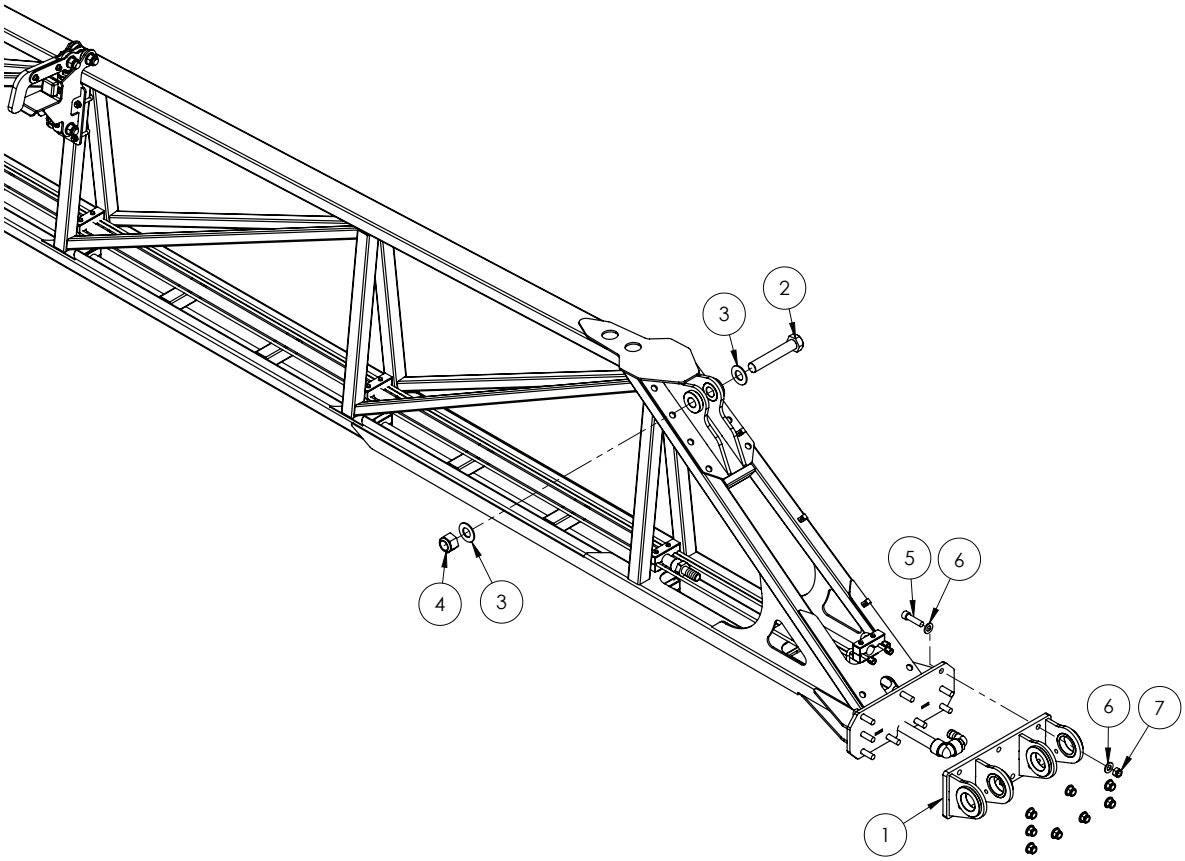

ITEM NO.	PART NUMBER	DESCRIPTION	QTY.
1	GA4602100	BOOM MOUNT, INNER WING, TRITECH, MY20	1
2	GA0500074	BOLT, 1 1/4" X 7" UNC, ZP, GR8	1
3	GA0500072	WASHER, 1 1/4", ZP	2
4	GA0500071	NUT 1 1/4", NYLOC, ZP, UNC	1
5	GA5048680	SHCS M16 X 60 GR12.9 ZP	9
6	GA5001043	WASHER 16MM FLAT SS HD	18
7	GA5001029	NUT M16 NYLOC ZP	9

^ See Chapter 18 'Hydraulics' for sub-assembly

Continued over page

Bi-Fold Linkage Mount Assembly - 36-42m

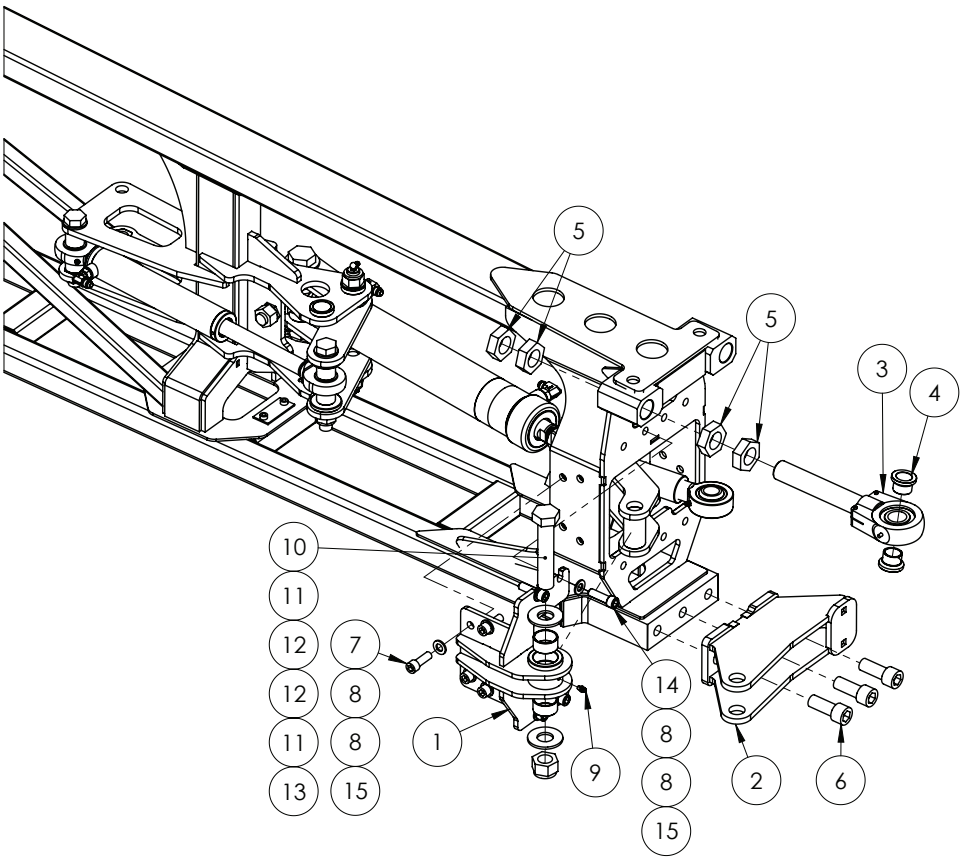

ITEM NO.	PART NUMBER	DESCRIPTION	QTY.
1	GA4602175	"BOOM BI-FOLD LINKAGE MOUNT, TRITECH, MY20"	1
2	GA4602140	"BOOM HINGE MOUNT, BOLT ON, LOWER, TRITECH, MY19"	1
3	*	"BEARING, ROSE END HOUSING, M28 SCREW ON, SUIT HYDRAULIC CYLINDER AND DELTA LINK, NO BUSHES"	1
4	GA5021925	"SMALL BEARING BUSH, SUIT HYDRAULIC CYLINDER END, HYPOWER, R-10424"	2
5	GA5010963	NUT 1 1/4 UNF 12 TPI ZP LOCK NUT	4
6	GA0500028	SHCS, M20 X 50, ZP GR12.9	3
7	GA5000313	SHCS M12 X 35 GR12.9 ZP	4
8	GA5000577	WASHER 12MM FLAT SS HD	16
9	GA5012203	GREASE NIPPLE 1/4" UNF SHORT	1
10	GA5006031	BOLT 1" UNC X 5"	2
11	GA5017659	WASHER 1 FLAT ZP HD (5MM THICK)	6
12	GA5055650	"GLACIER BUSH, ID 35 X OD 39 X 20 LONG"	2
13	GA5012439	1" NYLOC NUT UNC ZP	3
14	GA5000321	SHCS M12 X 40 GR12.9 ZP	4
15	GA5012461	NUT M12 NYLOC ZP	8

* Sub-assembly on following pages

36-42m - Fold Ram Assembly

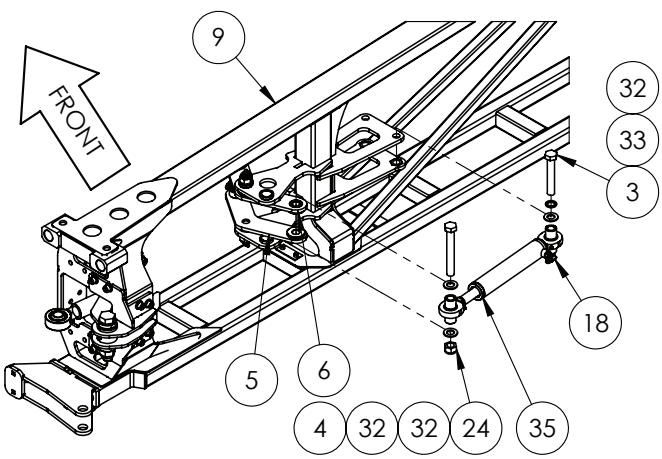

ITEM 9	INNER BOOM RIVX
GA4602079	24-30 M
GA4602080	36 M
GA4602170	42 M

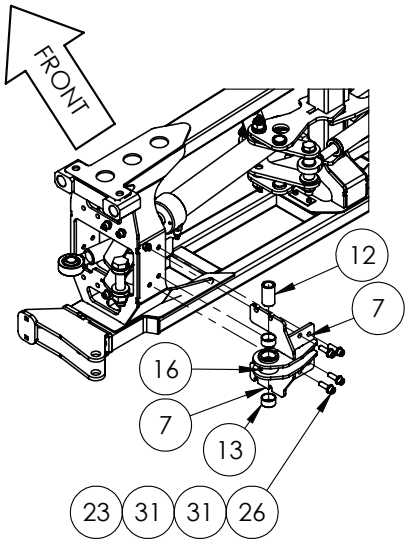

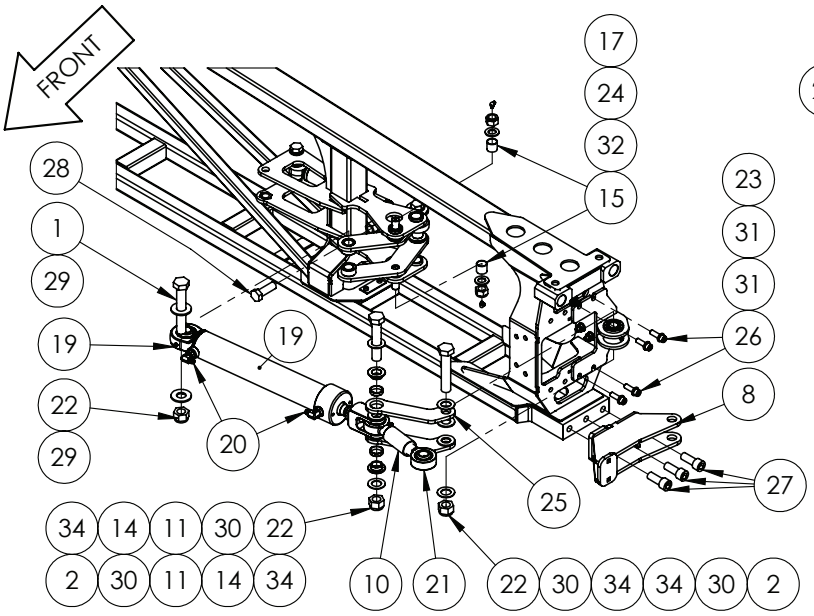

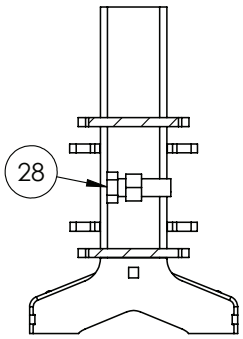

STOPPER BOLT LOCATION

ITEM NO.	PART NUMBER	DESCRIPTION	QTY.
1	GA5006033	BOLT 1" UNC X 6" ZP	1
2	GA5006031	BOLT 1" X 5" UNC GR8 ZP	2
3	GA5048110	BOLT M20 X 120 GR8.8 ZP	1
4	GA5001531	BOLT M20 X 150 GR8.8 ZP	1
5	GA4602215	BOOM BI-FOLD BREAKAWAY LINK A, TRITECH MY20	1
6	GA4602220	BOOM BI-FOLD BREAKAWAY LINK B, TRITECH MY20	1
7	GA4602175	BOOM BI-FOLD LINKAGE MOUNT, TRITECH, MY20	1
8	GA4602140	BOOM HINGE MOUNT, BOLT ON, LOWER, TRITECH, MY19	1
9	GA4602080	BOOM WING, LH & RH INNER, 33-36M, RIVX	1
10	GA4551290	BUSH, BI-FOLD ADJUSTER LINK, 1 1/4"UNF X 90mm LONG, MY20 BOOM	1

Continued over page

36-42m - Fold Ram Assembly

ITEM NO.	PART NUMBER	DESCRIPTION	QTY.
11	GA4551535	BUSH, BOOM LINKAGE PIVOT, TRITECH S	2
12	GA4550210	BUSH, FOLD LINK BOOM END, TRITECH BOOM 2015	1
13	GA5055650	GLACIER BUSH, ID 35 X OD 39 X 20 LONG	2
14	GA5078612	GLACIER BUSH, 36mm OD X 32mm ID X 9mm LONG	2
15	GA5065487	GLACIER BUSH, 1" ID, 1.125" OD, 1" LONG	2
16	GA5012203	GREASE NIPPLE, SHORT, 1/4 UNF, MACH0207	1
17	GA5051970	GREASE NIPPLE, 6mm, 90 DEG	2
18	GA3500716	HYDRAULIC ADAPTOR ELBOW, 9/16" UNO TO 9/16" JIC, 90 DEG, S91-0909	1
19	^	HYDRAULIC CYLINDER, 2.5" BORE, 1 1/4" ROD,350mm STROKE, 50mm CUSHION, BI-FOLD, TRITECH, MY20	1
20	GA3500700	HYDRAULIC ADAPTOR, ELBOW, 90 DEGREE, 9/16" JIC MALE X 3/4" UN MALE O-RING, S91-0912	2
21	GA5070530	LARGE ROSE END 1" X 1 1/4" UNF BB074-VM16	2
22	GA5012439	NUT 1" NYLOC UNC ZP	3
23	GA5012461	NUT M12 NYLOC ZP	8
24	GA5048125	NUT M20 NYLOC COARSE ZP	3
25	GA4404865	PLATE, BOOM BI-FOLD MECHANISM, TRITECH, MY20	2
26	GA5000321	SHCS M12 X 40 GR12.9 ZP	8
27	GA0500028	SHCS, M20 X 50, ZP GR12.9	3
28	GA5001557	SET SCREW M20 X 60 ZP GR8.8	1
29	GA5017659	WASHER 1 FLAT ZP HD (5mm THICK)	2
30	GA5001893	WASHER 1" X 1 7/8" FLAT ZP	4
31	GA5000577	WASHER 12mm FLAT SS HD	16
32	GA5001741	WASHER 20mm FLAT SS HD	
33	GA5001721	WASHER 20mm SPRING SS	1
34	GA0500078	WASHER, 1" ID X 1 7/8" OD X 1/8" THICK, NYLON	4
35	GA3500683	HYDRAULIC CYLINDER, 1 1/2" BORE, 1" ROD, 182mm STROKE, BI-FOLD BREAKAWAY, TRITECH, MY20	1

36-42m - Bi-fold Boom Catch

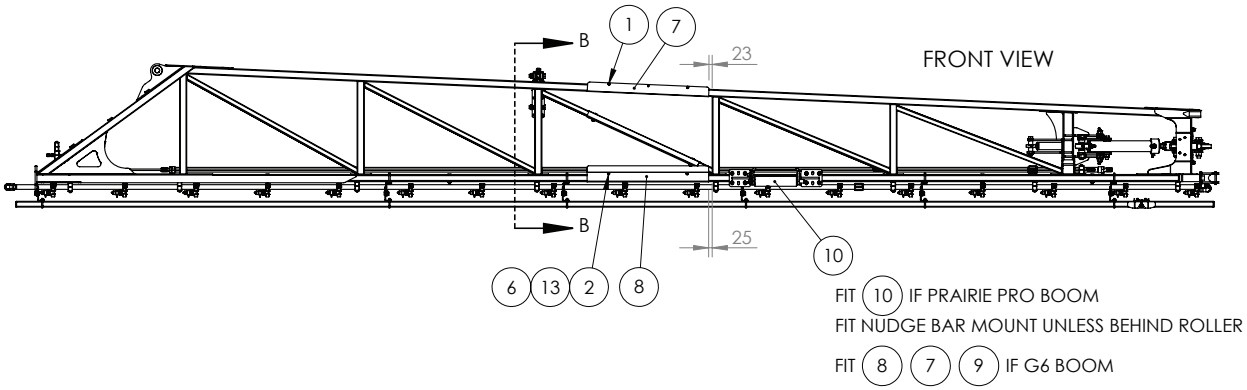

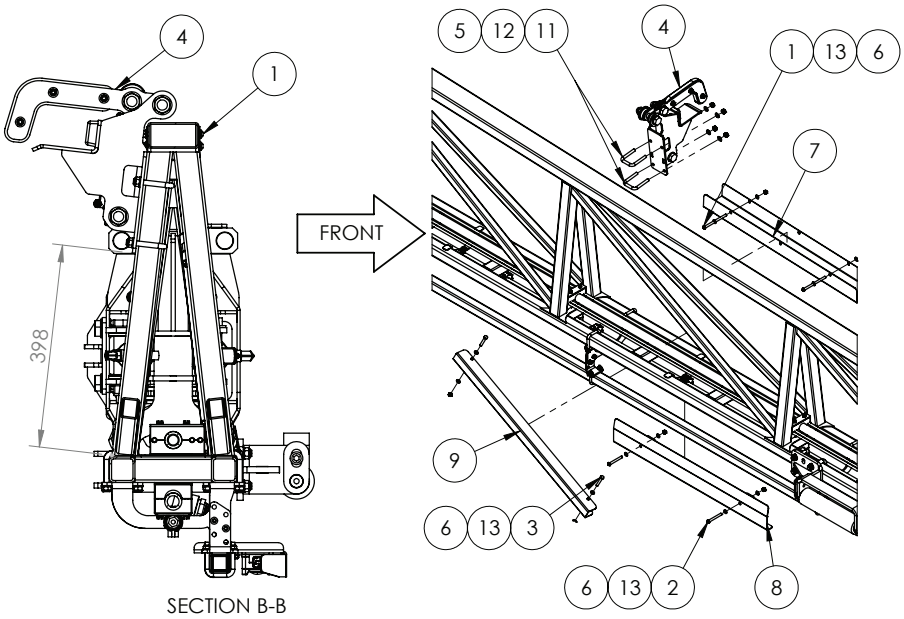

ITEM NO.	PART NUMBER	DESCRIPTION	QTY.
1	GA0500187	BHCS M8 X 120 SS A2-70	2
2	GA5078889	BHCS M8 X 70 SS A2-70	2
3	GA5004727	BOLT M8 X 50 GR8.8 ZP	2
4	GA4949740 *	BOOM BIFOLD CATCH ASSEMBLY, MY20	1
5	GA5051445	NUT M10 NYLOC SS	4
6	GA5052590	NUT M8 NYLOC SS	6
7	GA4408155	PROTECTOR, BOOM CORD, SUIT 100 X 50, 600mm, SS	1
8	GA4402215	PROTECTOR, BOOM CORD, SUIT 50 X 50, EXTENDED GUIDE, SS	1
9	GA4000242	PROTECTOR, BOOM DIAGONAL BRACE, SUIT 35 X 35, 300mm, SS	1
10		NOT FITTED	-
11	GA5053645	U BOLT SQUARE TOP M10 X 52 X 75	2
12	GA5000117	WASHER 10mm FLAT SS HD	4
13	GA5003643	WASHER 8mm FLAT SS HD	12

* Sub-assembly on following pages

Boom Wing - Inner- 36-42m - Hydraulic Lines

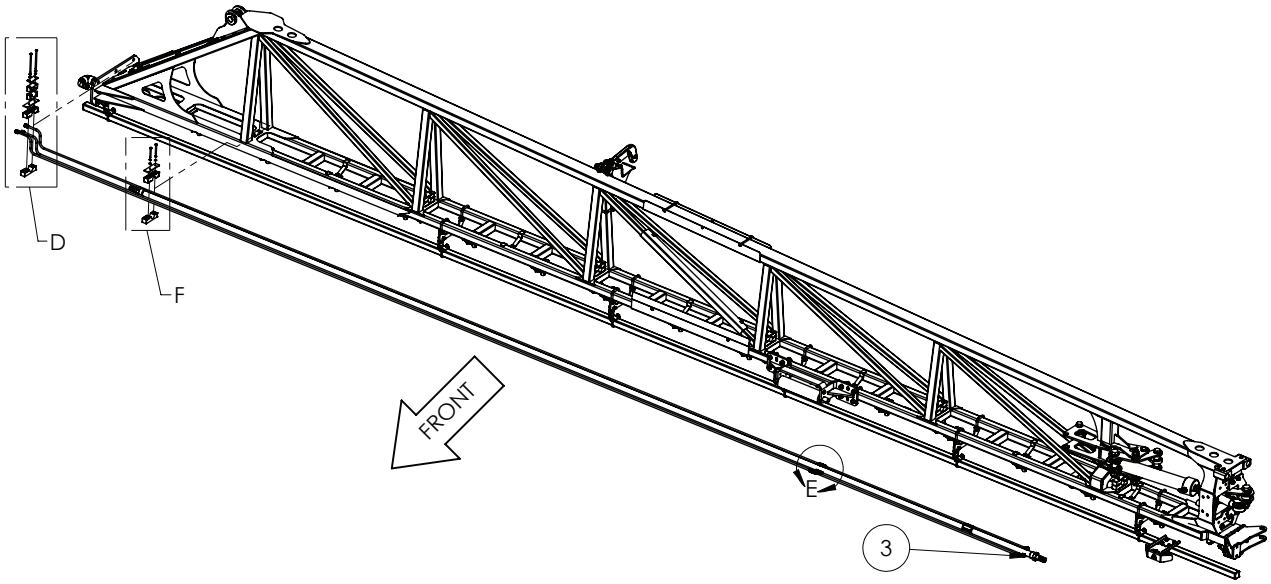

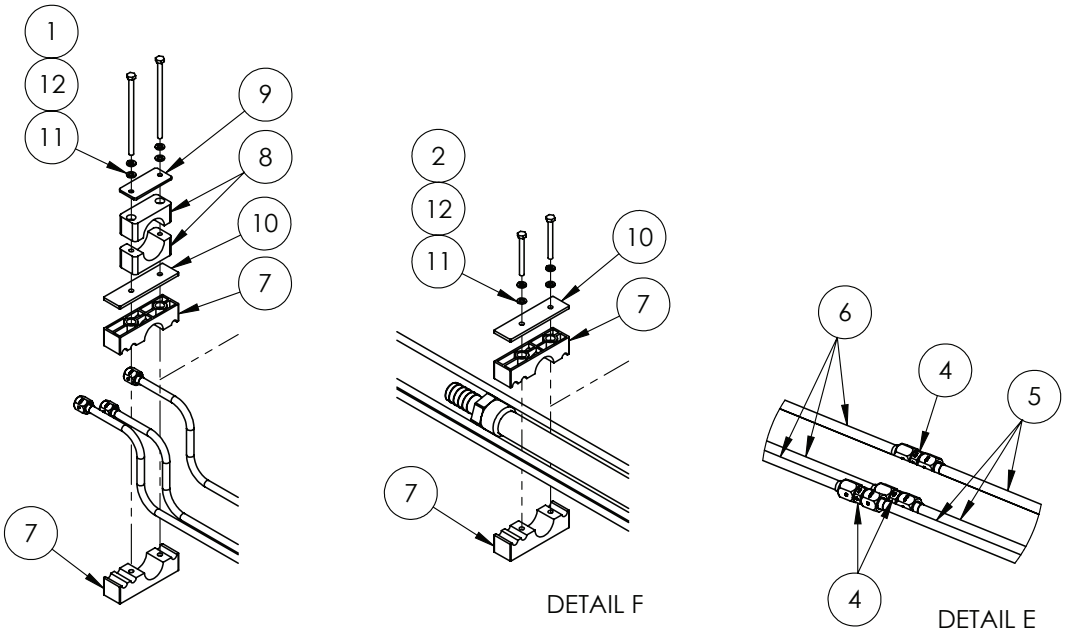

ITEM NO.	PART NUMBER	DESCRIPTION	QTY.
1	GA5011389	BOLT M6 X 120 GR8.8 ZP	2
2	GA0500085	BOLT M6 X 60 SS	12
3	GA4950605	BOOM POLY ASSEMBLY, 36M, INNER SECTION, BOOM RECIRCULATION,RIVX	1
4	GA3500202	HYDRAULIC ADAPTOR NIPPLE. 9/16” JIC TO 9/16” JIC, S17-0909	3
5	GA3500696	HYDRAULIC TUBE, 3/8” TUBE, 9/16” JIC FEMALE ENDS, BOOM SECTION B, TRITECH, MY20	3
6	GA3500695	HYDRAULIC TUBE, 3/8” TUBE, 9/16” JIC FEMALE ENDS, BOOM SECTION A, TRITECH, MY20	3

Continued over page

Boom Wing - Inner- 36-42m - Hydraulic Lines

ITEM NO.	PART NUMBER	DESCRIPTION	QTY.
7	GA3500707	MOUNTING CLAMP, JAW, SINGLE, GROUP 5, 33.7mm CENTRE WITH 3 X 10mm	14
8	GA5078070	MOUNTING CLAMP, SINGLE TYPE, JAW, PAIR, GROUP 5, 38mm, RCS-38J	1
9	GA5078075	MOUNTING CLAMP, SINGLE TYPE, PLATE, TOP, GROUP 5, RCS-5PT	1
10	GA4406140	PLATE, BOOM PLUMBING AND HYDRAULIC LINE CLAMP, TOP PLATE	7
11	GA5004437	WASHER 6mm FLAT SS	14
12	GA5004447	WASHER M6 SPRING SS	14

36-42m - Nudge Bar Bracket & XRT Sensor Mounting

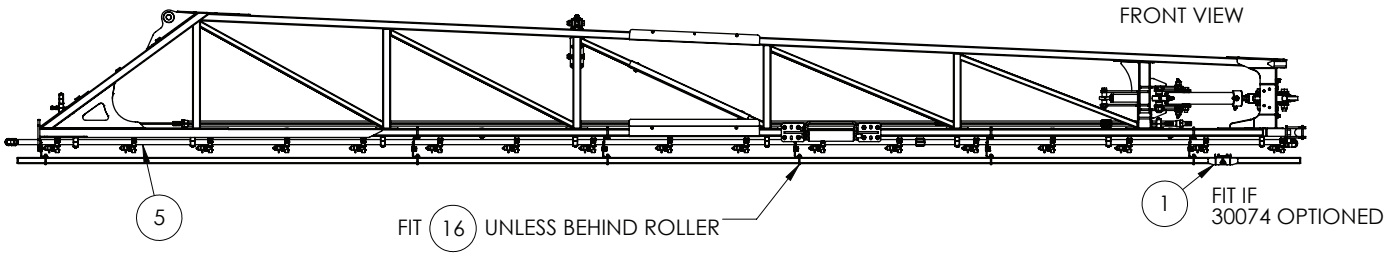

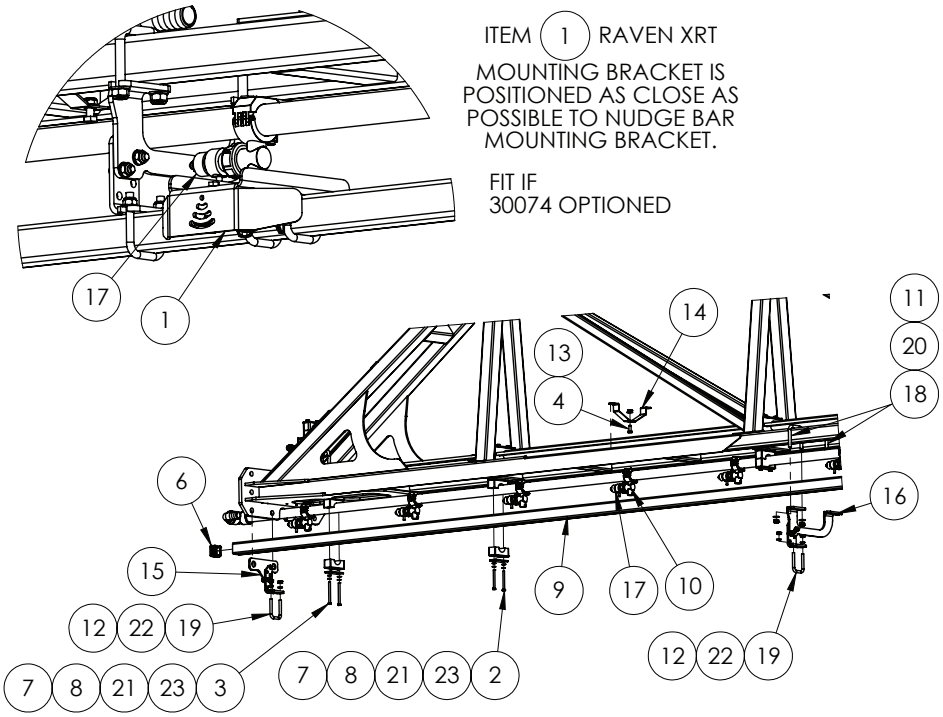

ITEM NO.	PART NUMBER	DESCRIPTION	QTY.
1	GA4912625	ASSEMBLY DRAWING ONLY, BRACKET, SENSOR,RAVEN XRT 107-0235-001	1
2	GA0500116	BOLT M6 X 65 SS A2-70	14
3	GA0500115	BOLT M6 X 75 SS A2-70	2
4	GA5004085	BOLT M8 X 20 GR8.8 ZP	6
5	GA4950130	BOOM POLY ASSEMBLY. BARE, 36M. LH INNER SECTION, DRILLED 500mm BROARDACRE,TRITECH	1
6	GA5002963	INSERT 38X38MM CAP	2
7	GA3500699	MOUNTING CLAMP, SINGLE TYPE, JAW, PAIR, GROUP 5, 33.7mm, RCS-33.5J	8
8	GA5078075	MOUNTING CLAMP, SINGLE TYPE, PLATE, TOP, GROUP 5, RCS-5PT	8
9	GA4553237	NUDGE BAR, 36M INNER, RIVX	1

Continue Over Page

36-42m - Nudge Bar Bracket & XRT Sensor Mounting

ITEM NO.	PART NUMBER	DESCRIPTION	QTY.
10	GA5077962	NOZZLE BODY, SINGLE, 1", TEEJET, QJ17560A-1-NYB	17
11	GA5051445	NUT M10 NYLOC SS	20
12	GA5052590	NUT M8 NYLOC SS	12
13	GA5070710	NUT WITH FLANGE, PLASTIC, M8 X 1.25	6
14	GA4411215	PLATE, BOOM POLY SUPPORT MOUNT, INNER WING, TRITECH, MY21	6
15	*	PRODUCTION DRAWING ONLY, NOZZLE GUARD MOUNT, RIVX BOOM, INNER	1
16	*	PRODUCTION DRAWING ONLY, NOZZLE GUARD MOUNTING, RIVX BOOM, INNER	5
17	GA5065520	SPRAY STOP, RAPIDFIRE, SUIT TEEJET NOZZLE BODY, ALTEK	17
18	GA5053645	U BOLT SQUARE TOP M10 X 52 X 75	10
19	GA0500084	U BOLT SQUARE TOP M8 X 42 X 65, 304 SS	6
20	GA5000117	WASHER 10mm FLAT SS HD	20
21	GA5004437	WASHER 6mm FLAT SS	16
22	GA5003643	WASHER 8mm FLAT SS HD	12
23	GA5004447	WASHER M6 SPRING SS	16

* Sub-assembly on following pages

Nudge Bar Guard Bracket Assembly

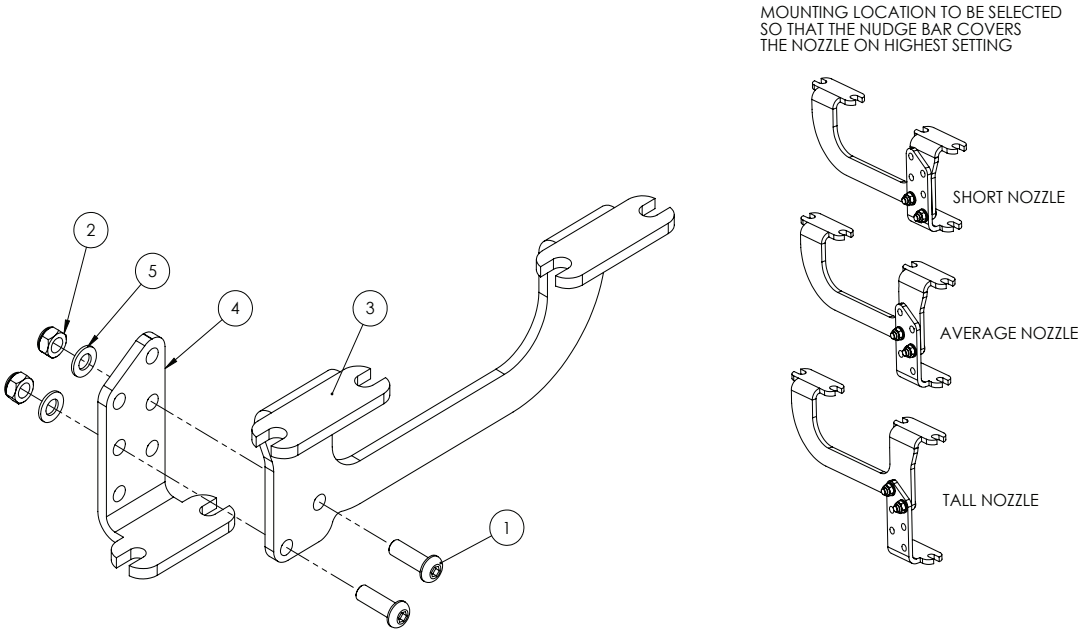

ITEM NO.	PART NUMBER	DESCRIPTION	QTY.
1	GA5011473	BHCS M8 X 25 SS A2-70	2
2	GA5052590	NUT M8 NYLOC SS	2
3	GA4415500	PLATE, BOOM NUDGE BAR MOUNT, ADJUSTABLE, TOP, INNER, TRITECH	1
4	GA4415505	PLATE, BOOM NUDGE BAR MOUNT, ADJUSTIBLE, LOWER, TRITECH	1
5	GA5003651	WASHER 8mm FLAT SS	2

36-42m - Bi-fold Boom Catch Bracket & Mounting

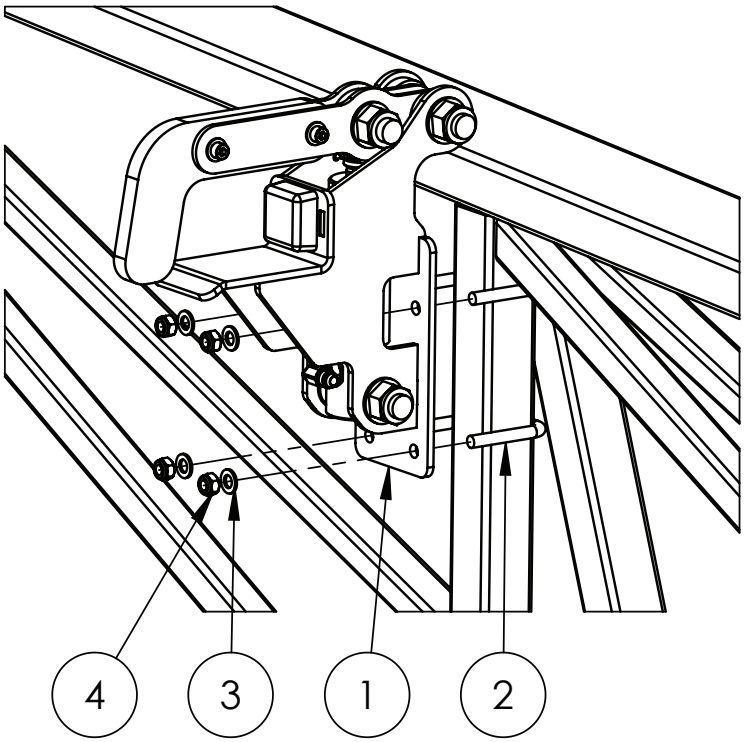

ITEM NO.	PART NUMBER	DESCRIPTION	QTY.
1	GA4602690	BOOM BIFOLD CATCH BRACKET, MY20	1
2	GA5053645	U BOLT SQUARE TOP M10 X 52 X 75	2
3	GA5000117	WASHER 10MM FLAT SS HD	4
4	GA5051445	NUT M10 NYLOC SS	4

* Sub-assembly on following pages

36-42m - Bi-fold Boom Catch Assembly

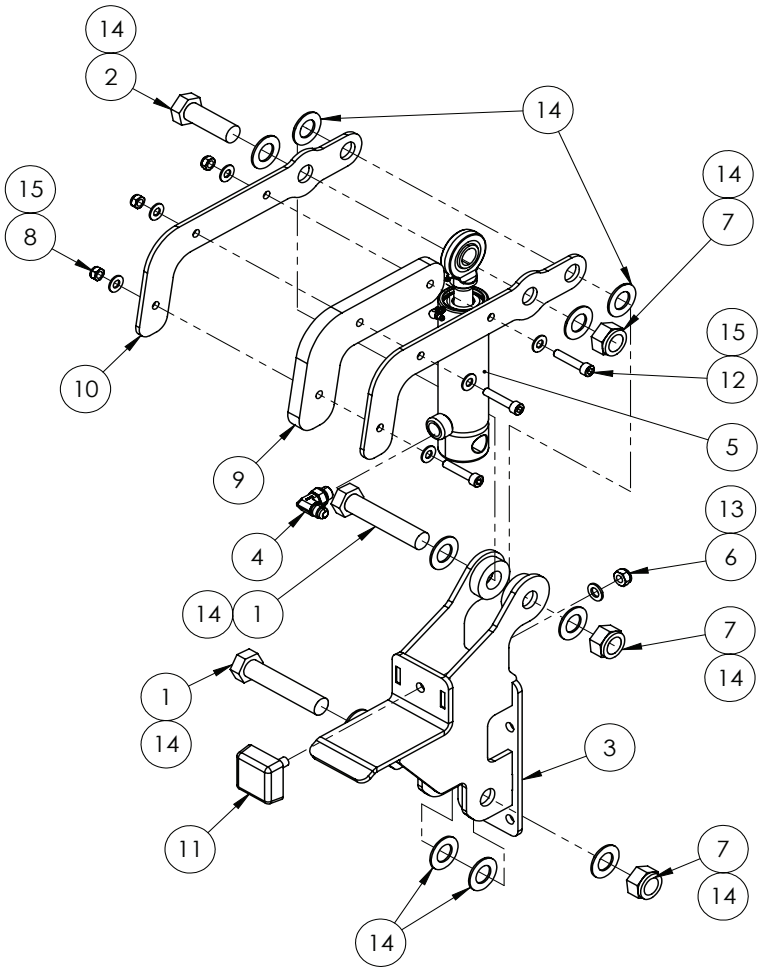

ITEM NO.	PART NUMBER	DESCRIPTION	QTY.
1	GA5048355	BOLT M20 X 100 GR8.8 ZP	2
2	GA5011333	BOLT M20 X 60 GR8.8 ZP	1
3	GA4602690	BOOM BIFOLD CATCH BRACKET, MY20	1
4	GA3500716	HYDRAULIC ADAPTOR ELBOW, 9/16” UNO TO 9/16” JIC, 90 DEG, S91-0909	1
5	GA3500480	HYDRAULIC CYLINDER, BORE 1.5”, ROD 0.75”, STROKE 28mm, DISPLACEMENT, SPRING RETURN	1
6	GA5000141	NUT M10 NYLOC ZP	1
7	GA5048125	NUT M20 NYLOC COARSE ZP	3
8	GA5052590	NUT M8 NYLOC SS	1
9	GA5078598	PLASTIC BOOM BIFOLD CATCH HOOK, MY20	1
10	GA4403556	PLATE, LATCH BRACKET, BOOM LATCH, RIVEX BOOM	2
11	GA5078569	RUBBER BUFFER, 50 X 50 X 20mm SQUARE, M10 X 28mm MALE THREAD	1
12	GA5011487	SHCS M8 X 40 GR 12.9 ZP	3
13	GA5000117	WASHER 10mm FLAT SS HD	1
14	GA5001742	WASHER 20mm FLAT SS 2.0mm	10
15	GA5003643	WASHER 8mm FLAT SS HD	6

* Sub-assembly on following pages

36-42m - Outer Pivot Assembly

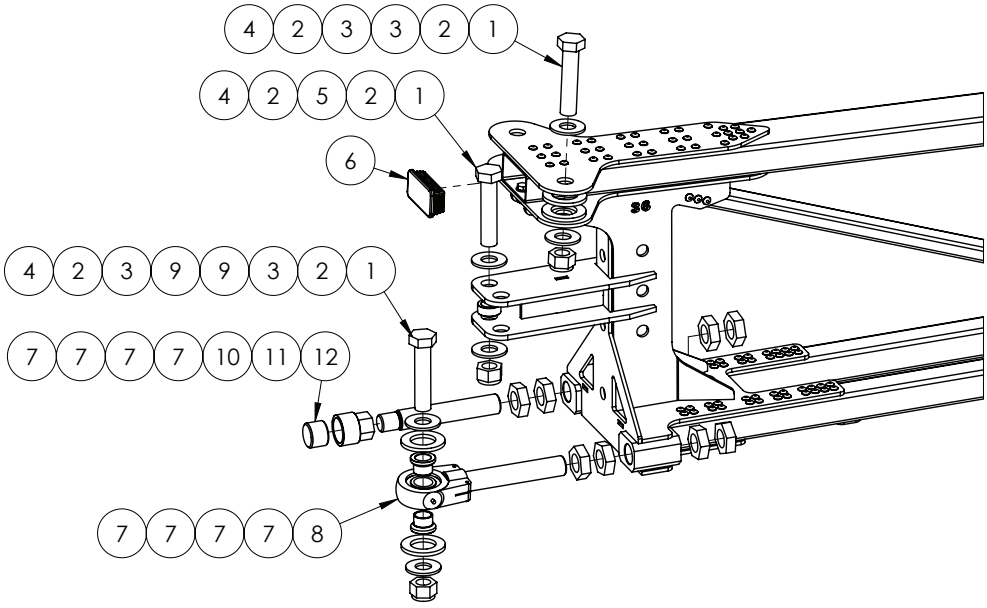

ITEM NO.	PART NUMBER	DESCRIPTION	QTY.
1	GA5006149	BOLT 1 UNC X 4 1/2 GR8 ZP	3
2	GA5017659	WASHER 1 FLAT ZP HD (5MM THICK)	6
3	GA4407825	WASHER, PLASTIC DISC, ROSE END SPACER, TRITECH MY20	4
4	GA5012439	1" NYLOC NUT UNC ZP	3
5	GA4551160	BUSH, 25.7MM ID X 37MM OD X 14.5MM LONG, CRUSH TUBE ZP	1
6	GA5078601	END CAP, PLASTIC, BLACK, INSERT, RHS. 100 X 50, 2.0 - 4.0MM WALL	1
7	GA5010963	NUT 1 1/4 UNF 12 TPI ZP LOCK NUT	8
8	GA5052965	"BEARING, ROSE END HOUSING, M28 SCREW ON, SUIT HYDRAULIC CYLINDER AND DELTA LINK, NO BUSHES"	1
9	GA5021925	SMALL BEARING BUSH, SUIT HYDRAULIC CYLINDER END, HYPOWER, R-10424	2
10	GA4550645	THREADED BOOM PIVOT ADJUSTER, 1 1/4" UNF AND M28 THREADS, 48M BOOM	2
11	GA4551100	BUSH, BOOM STOPPER BOLT	1
12	GA4551330	BOOM STOPPER, DIAMETER 40MM X 30MM LONG, URETHANE, RED	1

^ See Chapter 18 'Hydraulics' for sub-assembly

36-42m - Breakaway Assembly

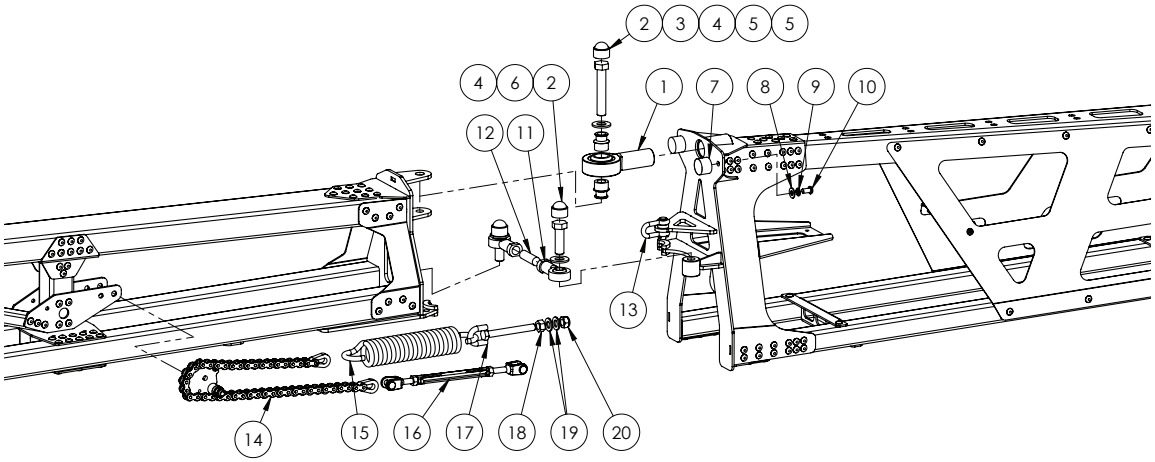

ITEM NO.	PART NUMBER	DESCRIPTION	QTY.
1	GA5070530	LARGE ROSE END 1" X 1 1/4" UNF BB074-VM16	1
2	GA5075080	HEX NUT PROTECTION CAP SUIT M16 BLACK	3
3	GA5011297	BOLT M16 X 90 GR8.8 ZP	1
4	GA5001043	WASHER 16MM FLAT SS HD	3
5	GA4552225	BREAKAWAY ROSE END SPACER BUSH 3D 2.0	2
6	GA5000931	BOLT M16 X 50 GR8.8 ZP	2
7	GA5014613	RUBBER BUFFER DIA 30 HT 20	2
8	GA5003643	WASHER 8MM FLAT SS HD	2
9	GA5004919	WASHER 8MM SPRING SS	2
10	GA5004696	BHCS M8 X 16 SS A2-70	2
11	GA5014469	ROD END FEMALE 16MM	2
12	GA5071105	GRUB SCREW M16 X 50	1
13	GA5071060	10MM UTILITY CLEVIS 24CST002	1
14	BREAKAWAY CHAIN KIT	BREAKAWAY MECHANISM	1
15	GA5016605	SPRING, TENSION, 50 OD X 260 LONG X 9MM, BREAKAWAY, MY20	1
16	GA5070505	TURNBUCKLE, S/S 10.MM JAW/JAW	1
17	GA5075150	EYE BOLT 12MM X 100MM SHORT	1
18	GA5000559	NUT M12 HEX ZP	1
19	GA5000577	WASHER 12MM FLAT SS HD	2
20	GA5012461	NUT M12 NYLOC ZP	1

^ See Chapter 18 'Hydraulics' for sub-assembly

36-42m - Breakaway Chain Assembly

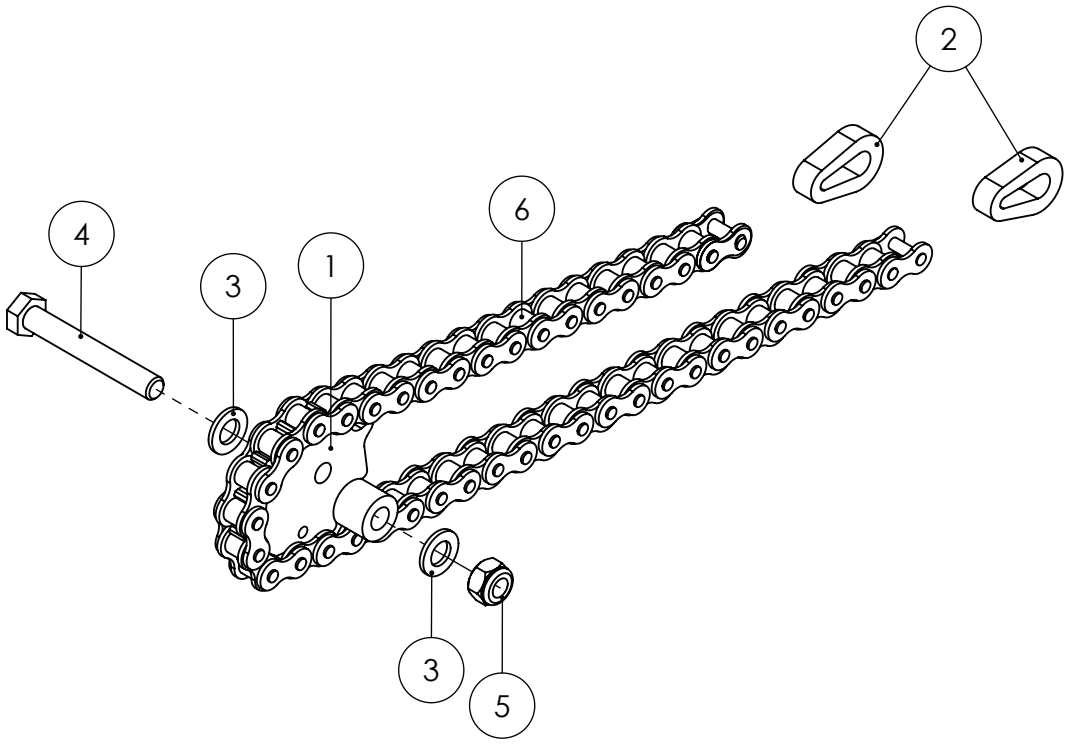

ITEM NO.	PART NUMBER	DESCRIPTION	QTY.
1	GA4659800	BREAK AWAY CENTRE PIVOT FAB ASSEM	1
2	GA4505695	LINK PLATE CHAIN END	2
3	GA5000117	WASHER 10MM FLAT SS HD	2
4	GA5011163	BOLT M10 X 70 GR8.8 ZP	1
5	GA5000141	NUT M10 NYLOC ZP	1
6	GA5068985	"CHAIN, 5/8"", 41 PITCH BREAKAWAY HINGE, INC 2 JOINING LINKS, 43 ROLLERS TOTAL"	1

^ See Chapter 18 'Hydraulics' for sub-assembly

36-42m - Inner Wings & Nudge Bars

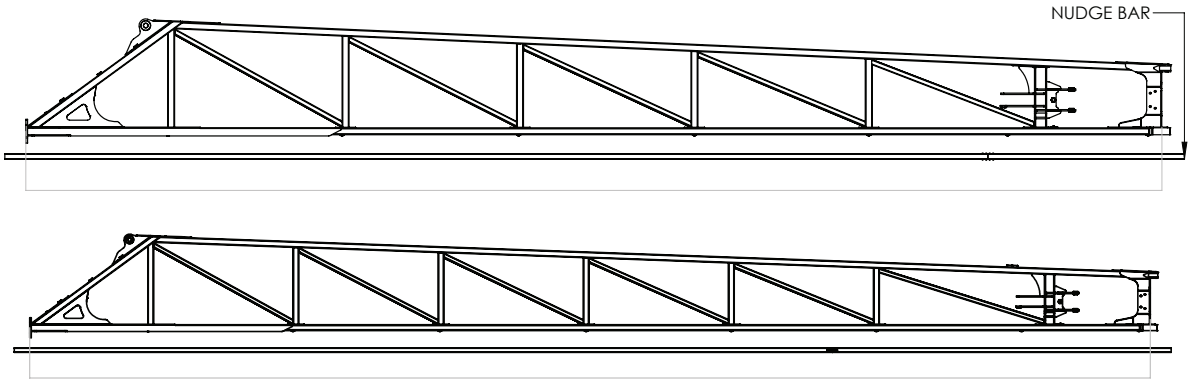

PART NUMBER	DESCRIPTION
GA4602080	INNER WING, 36M, LH & RH - 8086 MM
GA4909165	NUDGE BAR ASSEMBLY, 36M INNER, RIVX
GA4602170	INNER WING, 42M, LH & RH - 9586 MM
GA4909175	NUDGE BAR ASSEMBLY, 42M INNER, RIVX

36-42m - Outer Wings & Nudge Bars

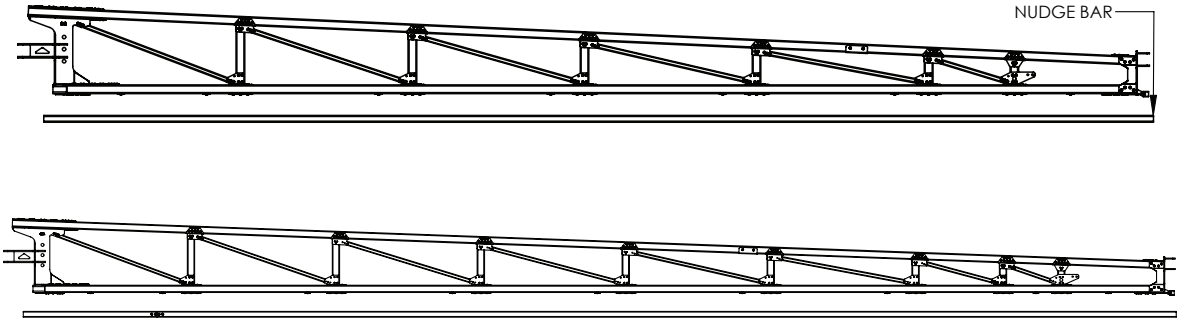

PART NUMBER	DESCRIPTION
GA4602160	OUTER BOOM, 36M, TRITECH RIVX, MY20
GA5072170	NUDGE BAR, 36MT OUTER, 6420MM
GA4602165	OUTER BOOM, 42M, TRITECH RIVX, MY20
GA4909170	NUDGE BAR ASSEMBLY, 42M OUTER, RIVX

36-42m - Break Away Tip

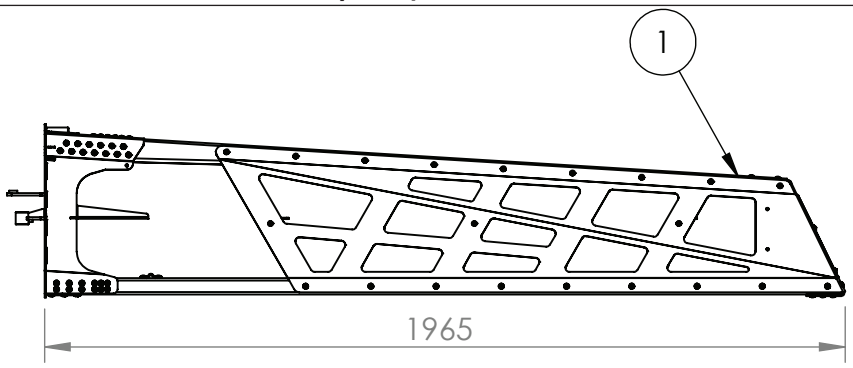

BREAKAWAY IS STANDARD FOR 24-36m BOOMS

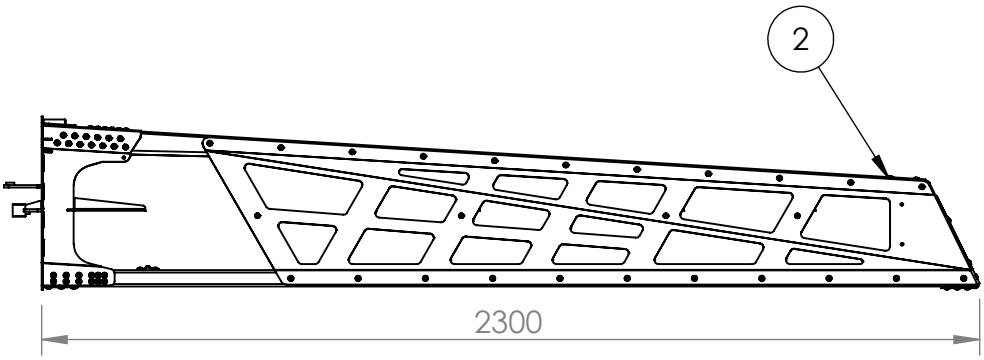

BREAKAWAY TIP IS REQUIRED FOR 10" SPACINGS 120'

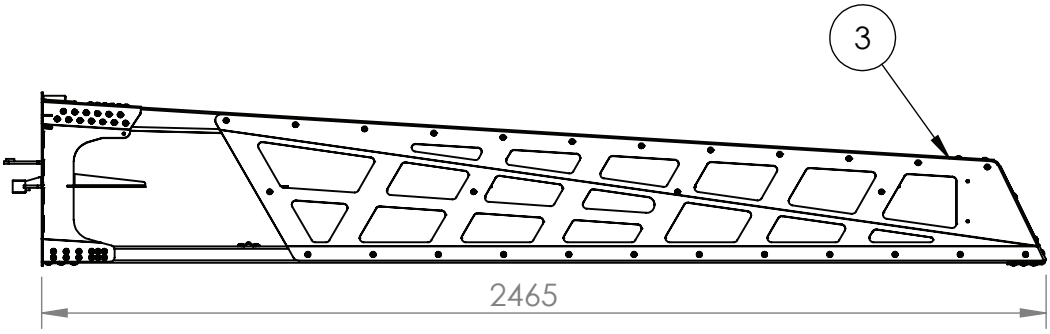

BREAKAWAY TIP IS FOR CUSTOM CONFIGURATIONS ONLY. NOT COMPATIBLE WITH BI-FOLD

PART NUMBER	DESCRIPTION
GA4951555	BREAKAWAY TIP ASSEMBLY 2M, BARE, TRITECH, MY22
GA4951560	BREAKAWAY TIP ASSEMBLY 2.3M, BARE, TRITECH, MY22
GA4951565	BREAKAWAY TIP ASSEMBLY, 2.5M BARE, TRITECH, MY22

^ See Chapter 18 'Hydraulics' for sub-assembly

48m - Boom Pivot

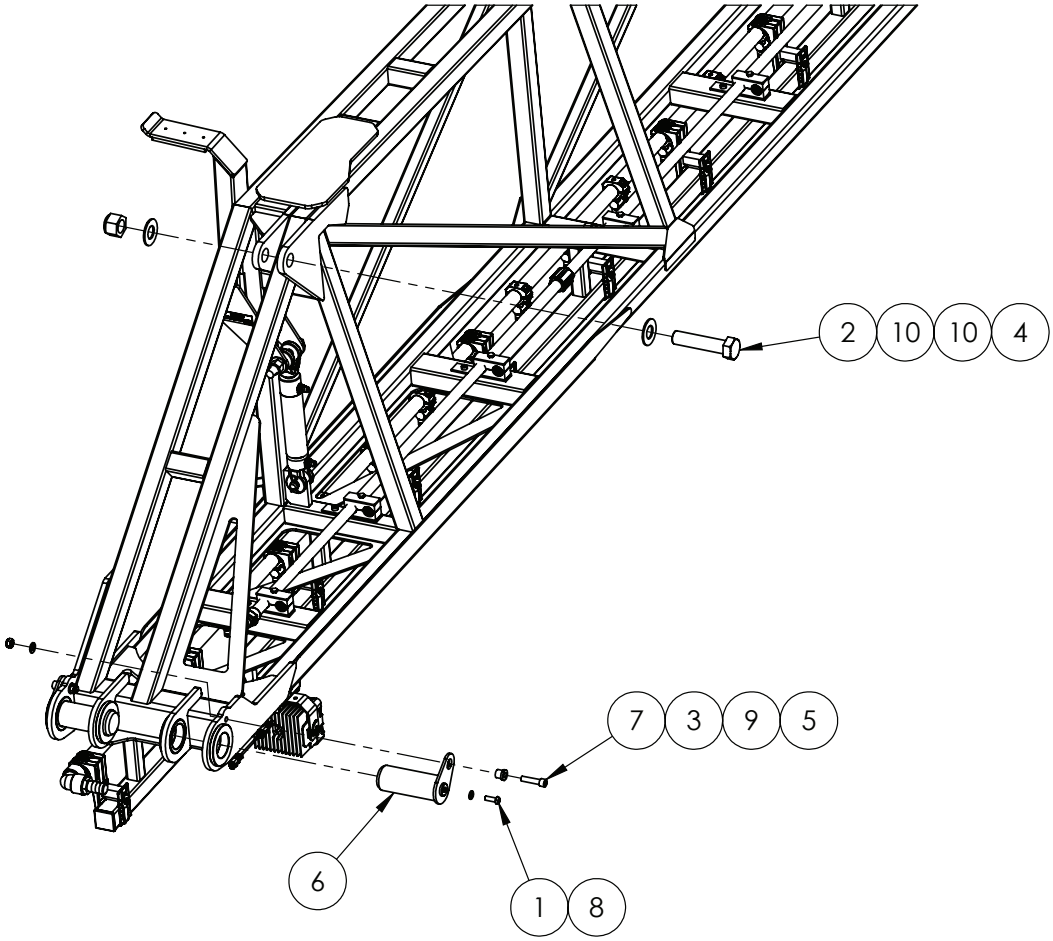

ITEM NO.	PART NUMBER	DESCRIPTION	QTY.
1	GA5048120	BHCS M10 X 30 SS A2-70	2
2	GA0500073	BOLT, 1 1/4" X 5 1/2" UNC, ZP, GR8	1
3	MACH0152	BUSH WITH SHOULDER, 12.3 ID X 25 OD X 21 LONG, SUIT PARALIFT PIN BOLTS	2
4	GA0500071	NUT 1 1/4", NYLOC, ZP, UNC	1
5	GA5012461	NUT M12 NYLOC ZP	2
6	GA4600625	PIN, BOOM TILT PIVOT, 60mm OD, FABRICATED, 48M	2
7	GA0500052	SHCS, M12 X 50 GR10.9, ZP	2
8	GA5000117	WASHER 10mm FLAT SS HD	2
9	GA5000577	WASHER 12mm FLAT SS HD	2
10	GA0500072	WASHER, 1 1/4", FLAT, OD 66 X ID 33.3 X 5mm, ZP	2

^ See Chapter 18 'Hydraulics' for sub-assembly

48m - Boom Catch

NOTE:

G8 ITEM 8 FITTED

G6/PRAIRIE PRO ITEM 6 FITTED

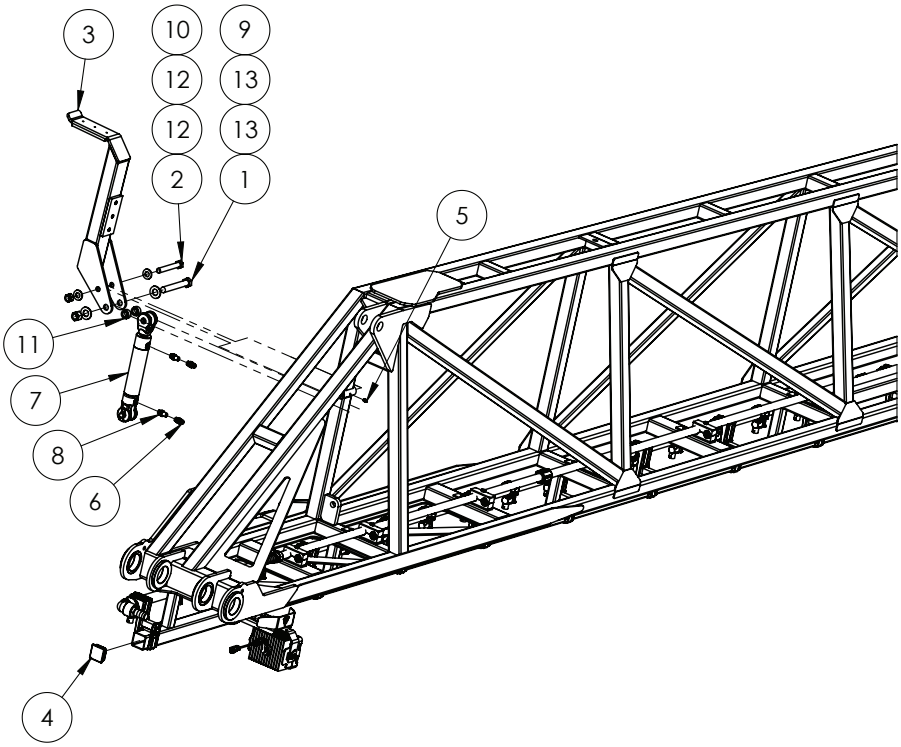

ITEM NO.	PART NUMBER	DESCRIPTION	QTY.
1	GA5070335	BOLT 3/4 UNC X 5 1/2 GR8 ZP	1
2	GA5011275	BOLT M16 X 120 GR8.8 ZP	1
3	GA4949075	BOOM CATCH ASSEMBLY, 48M BOOM	1
4	GA5024720	END CAP, PLASTIC, BLACK, INSERT, RHS. 50 X 50, 2.4 - 4.0mm WALL	2
5	GA5012203	GREASE NIPPLE, SHORT, 1/4 UNF, MACH0207	1
6	GA3500146	HYDRAULIC ADAPTOR, 9/16" JICM, 9/16" UNOM, S90-0909, RYCO	2
7	GA3500601	HYDRAULIC CYLINDER , DOUBLE ACTING, 1.5" BORE, 0.875" ROD, 4" STROKE	1
8	GA3500358	HYDRAULIC ADAPTOR, NIPPLE, 1/4" BSPT MALE X 9/16" UN MALE O-RING	2
9	GA5048430	NUT 3/4 UNC NYLOC ZP	1
10	GA5001029	NUT M16 NYLOC ZP	1
11	GA4553270	SPACER, ID19.5, OD40, 48m BOOM CATCH RAM SPACER	2
12	GA5001043	WASHER 16mm FLAT SS HD	2
13	GA5001045	WASHER, 3/4" FLAT, HD ZP	2

* Sub-assembly on following pages

^ See Chapter 18 'Hydraulics' for sub-assembly

48m - Boom Catch Assembly

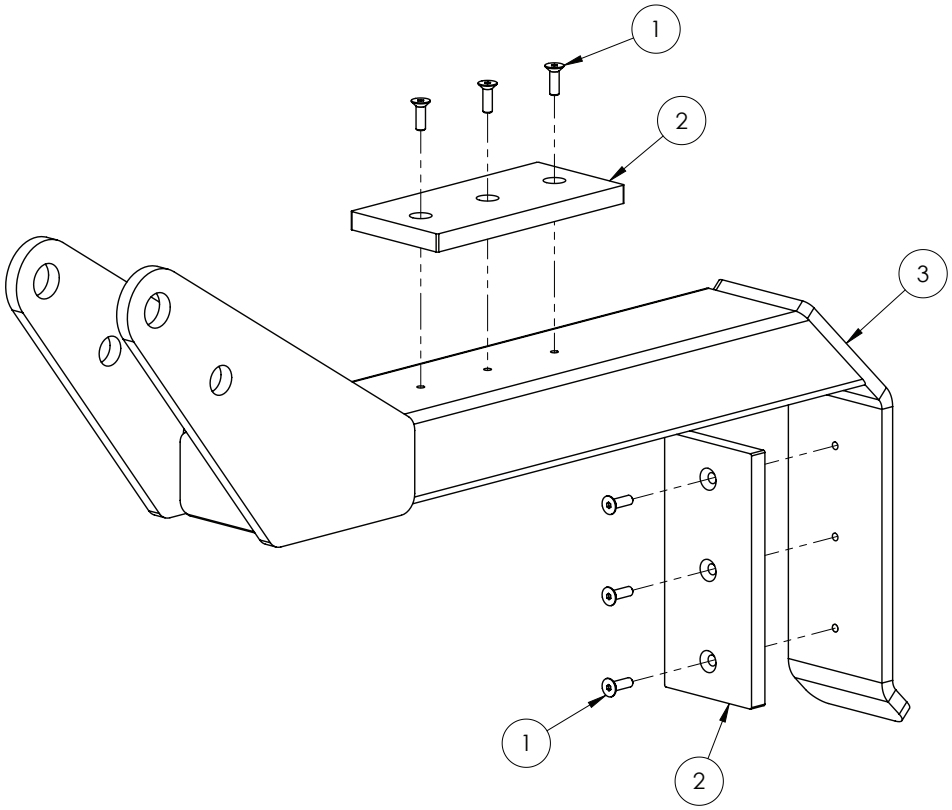

ITEM NO.	PART NUMBER	DESCRIPTION	QTY.
1	GA5051230	CSCS M5 X 16 SS A2-70	6
2	GA5072450	PLASTIC WEAR STRIP BOOM REST POLYSTONE 7000SR 65 X 140 X 10mm	2
3	GA4600730	TRANSPORT CATCH ARM, 48M BOOM	1

48m - Second Stage Fold

NOTE:
IF G8 FIT ITEM 13
IF G6 OR PRAIRIE PRO FIT ITEM 14

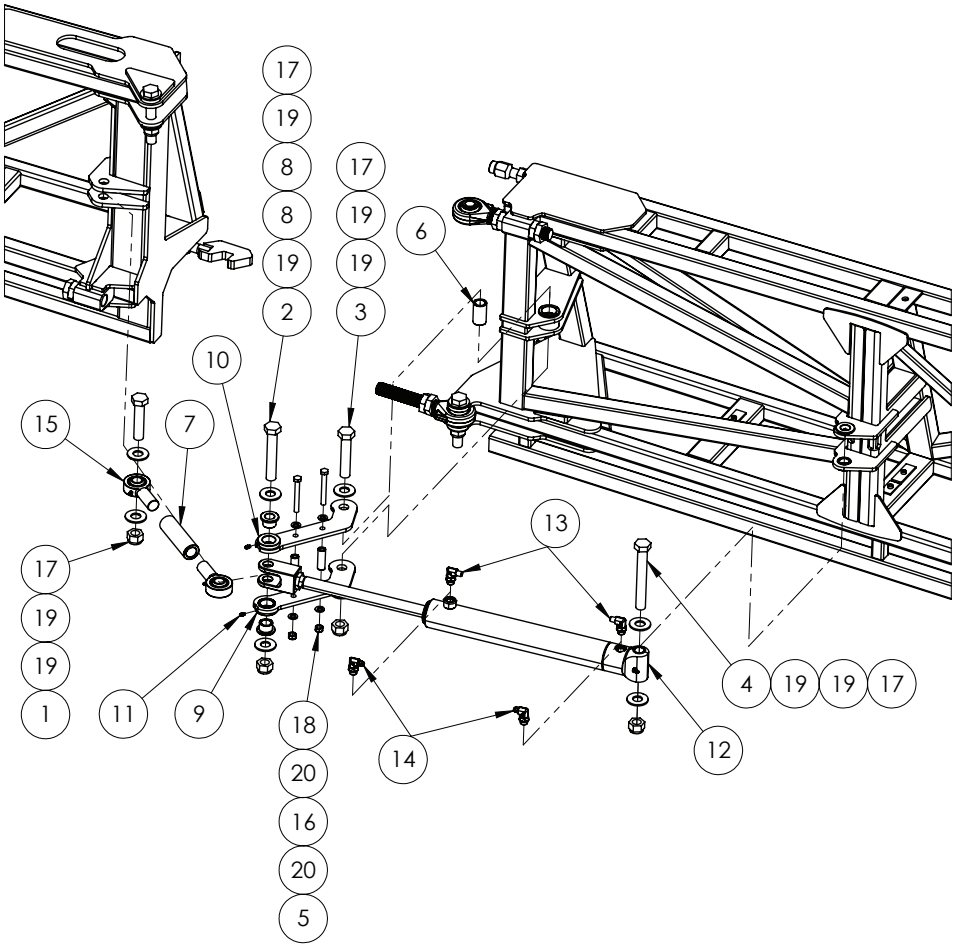

ITEM NO.	PART NUMBER	DESCRIPTION	QTY.
1	GA5006149	BOLT 1 UNC X 4 1/2 GR8 ZP	1
2	GA5006033	BOLT 1" UNC X 6" ZP	1
3	GA5006031	BOLT 1" X 5" UNC GR8 ZP	1
4	GA5006037	BOLT 1" X 7.5" UNC GR8 ZP	1
5	GA5000259	BOLT M12 X 100 GR8.8 ZP	2
6	GA4550210	BUSH, FOLD LINK BOOM END, TRITECH BOOM 2015	1
7	GA4550230	BUSH, ROSE END LINK, 1 1/4"UNF, 150mm LONG, TRITECH BOOM 2015	1
8	GA4550205	FLANGE BUSH, ROD END PIVOT, TRITECH BOOM 2015	2
9	GA4601005	FOLD LINK A, TOP, ROD END, TRITECH BOOM 2015	1
10	GA4601010	FOLD LINK B, TOP, ROD END, TRITECH BOOM 2015	1
11	GA5012203	GREASE NIPPLE, SHORT, 1/4 UNF, MACH0207	2

^ See Chapter 18 'Hydraulics' for sub-assembly

48m - Second Stage Fold

ITEM NO.	PART NUMBER	DESCRIPTION	QTY.
12	GA3500060	HYDRAULIC CYLINDER, BORE 2.5”, ROD 1.25”, STROKE 400mm	1
13	GA3500348	HYDRAULIC ADAPTOR, ELBOW, 90 DEGREE, 1/4” BSPT MALE X 3/4” UN MALE O-RING	2
14	GA3500700	HYDRAULIC ADAPTOR, ELBOW, 90 DEGREE, 9/16” JIC MALE X 3/4” UN MALE O-RING, S91-0912	2
15	GA5070530	LARGE ROSE END 1” X 1 1/4” UNF BB074-VM16	2
16	GA4550215	LINK SPACER, TRITECH BOOM 2015	2
17	GA5012439	NUT 1” NYLOC UNC ZP	4
18	GA5012461	NUT M12 NYLOC ZP	2
19	GA5017659	WASHER 1 FLAT ZP HD (5mm THICK)	8
20	GA5000577	WASHER 12mm FLAT SS HD	4

* Sub-assembly on following pages

^ See Chapter 18 ‘Hydraulics’ for sub-assembly

48m - Second Stage Fold - Latch Assembly

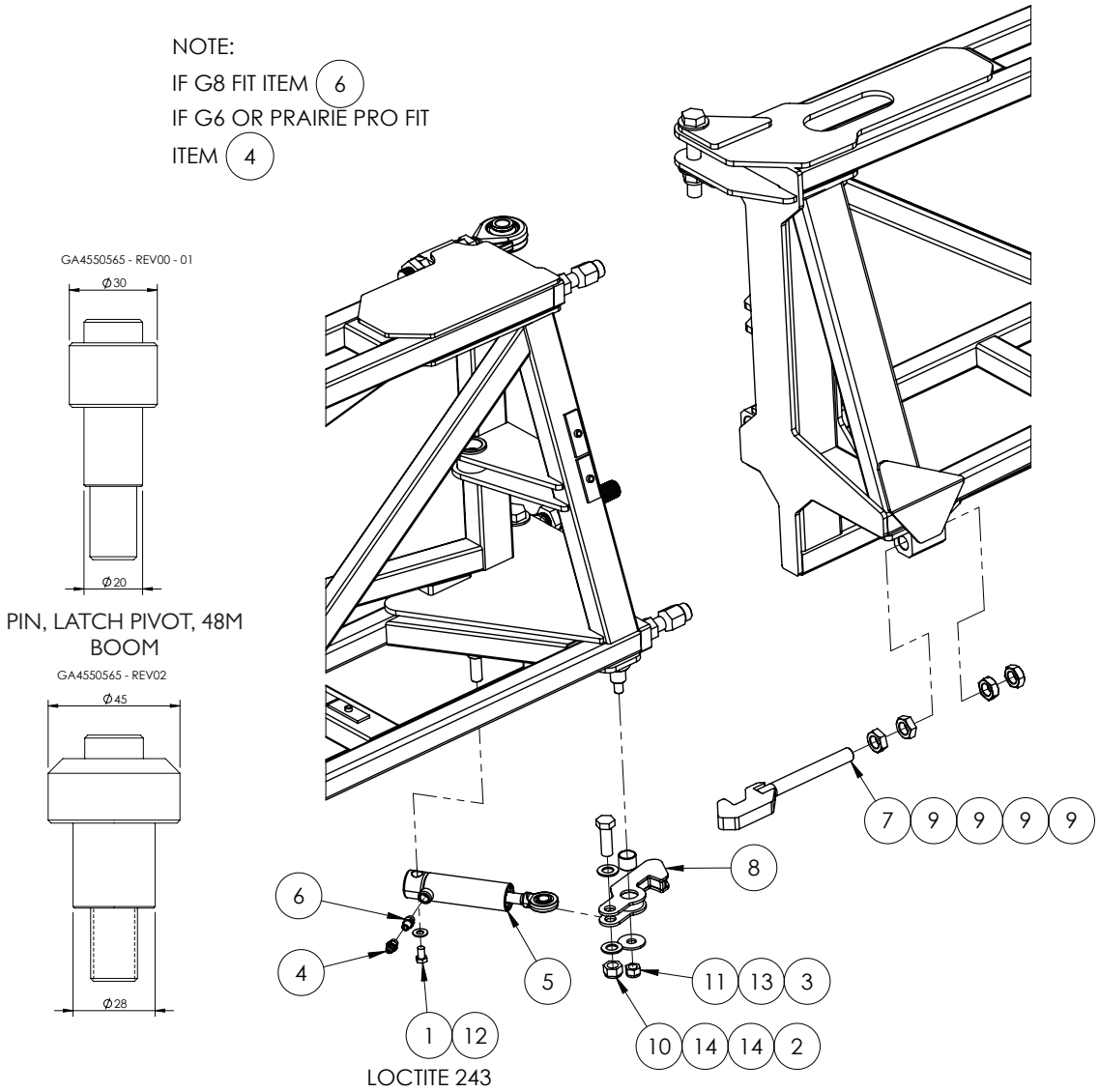

ITEM NO.	PART NUMBER	DESCRIPTION	QTY.
1	GA5011227	BOLT M12 X 20 GR8.8 ZP	1
2	GA5011333	BOLT M20 X 60 GR8.8 ZP	1
3	GA5074375	GLACIER BUSH, 28 ID X 25 LONG, PG283225F	1
4	GA3500146	HYDRAULIC ADAPTOR, 9/16" JICM, 9/16" UNOM, S90-0909, RYCO	1
5	GA3500480	HYDRAULIC CYLINDER, LATCH, 48M BOOM	1
6	GA3500358	HYDRAULIC ADAPTOR, NIPPLE, 1/4" BSPT MALE X 9/16" UN MALE O-RING	1
7	GA4600725	LATCH HOOK, ADJUSTER, 48M BOOM	1
8	GA4604055	LATCH HOOK, PIVOT, 48M BOOM, 19MM PIN	1
	GA4604055	LATCH HOOK, 28MM PIVOT, 48M BOOM, MY22	1
9	GA0500048	LOCK NUT, 1" UNF 12 TPI, ZP	4
10	GA5012467	M20 NYLOC NUT	1

Continue Over Page

48m - Second Stage Fold - Latch Assembly

ITEM NO.	PART NUMBER	DESCRIPTION	QTY.
11	GA5012463	NUT M16 NYLOC SS	1
12	GA5017673	WASHER 1/2" HIGH TENSILE	1
13	GA5011955	WASHER 16mm X 50 X 4 MUDGUARD ZP	1
14	GA5001741	WASHER 20mm FLAT SS HD	2

48m - Second Stage Fold - Rose Ends & Boom Stops

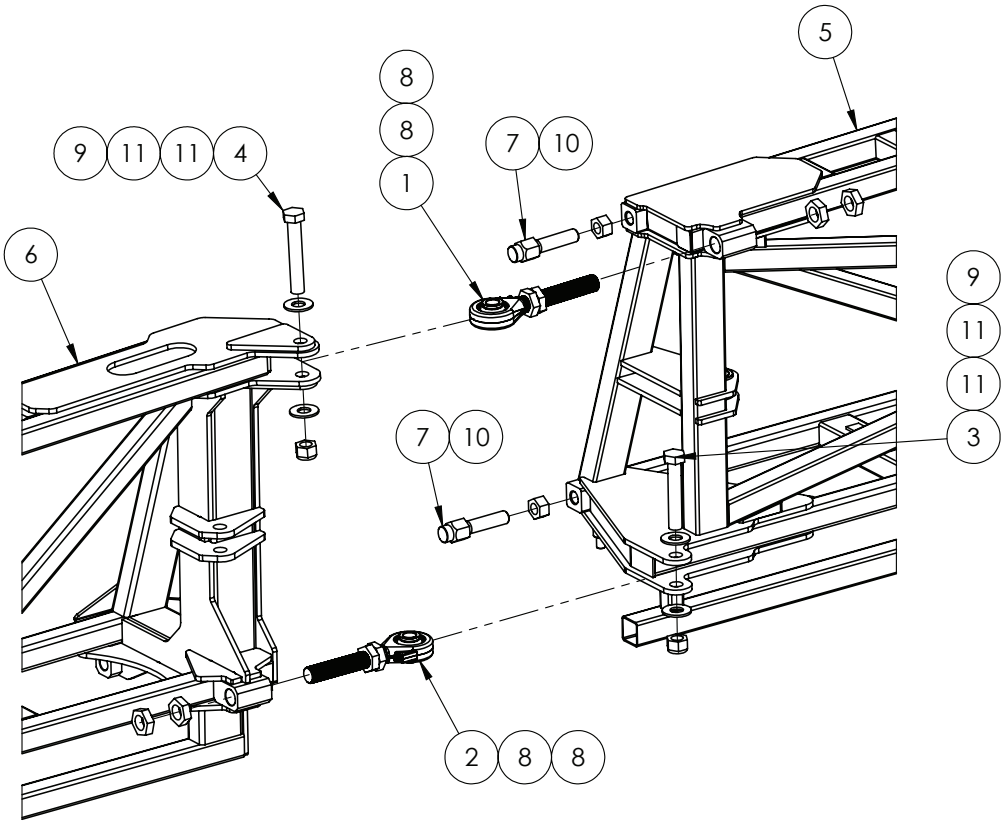

ITEM NO.	PART NUMBER	DESCRIPTION	QTY.
1	GA4914385	ASSEMBLY DRAWING ONLY, ROSE END BEARING, BOOM 48M, FORGED, TOP	1
2	GA4914375	ASSEMBLY DRAWING ONLY, ROSE END BEARING, BOOM 48M, FORGED	1
3	GA5048175	BOLT 1 UNC X 5 1/2 GR8 ZP	1
4	GA5006033	BOLT 1" UNC X 6" ZP	1
5	GA4600635	BOOM WING, INNER, 48M, LH, STEEL	1
6	GA4603615	BOOM WING, MID, 48M, LH, ALUMINIUM, ANGLE OUTER FOLD	1
7	GA4572495	BOOM DRUM STOPPER BOLT 1" UNF 12 TPI	2
8	GA5010963	NUT 1 1/4 UNF 12 TPI ZP LOCK NUT	4
9	GA5012439	NUT 1" NYLOC UNC ZP	2
10	GA5010991	NUT, 1" UNF, 12 TPI, ZP	2
11	GA5017659	WASHER 1 FLAT ZP HD (5mm THICK)	4

Rose End Assembly - Top

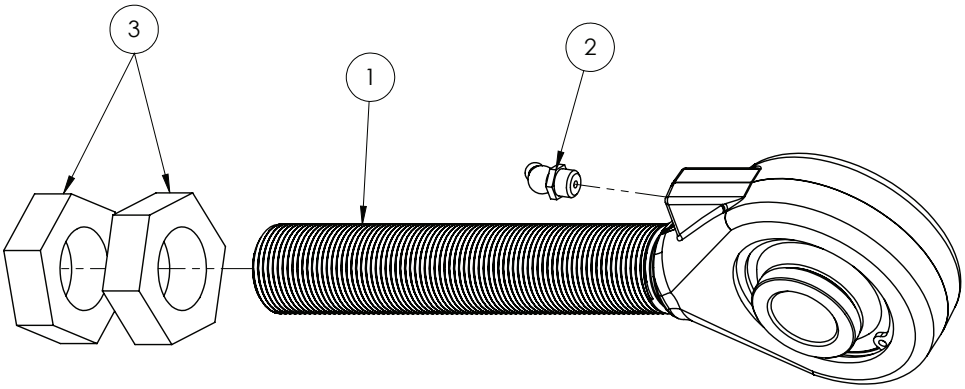

ITEM NO.	PART NUMBER	DESCRIPTION	QTY.
1	GA5078654	BEARING END, ASSEMBLY, 1 1/4-12 UNF THREAD, C/W GEH 35 ES-2RS BEARING, BUSHED DIA. 25.5	1
2	GA5055125	GREASE NIPPLE, ELBOW, 45 DEGREE, 1/8 BSP MALE	1
3	GA5010963	NUT 1 1/4 UNF 12 TPI ZP LOCK NUT	2

Rose End Assembly - Bottom

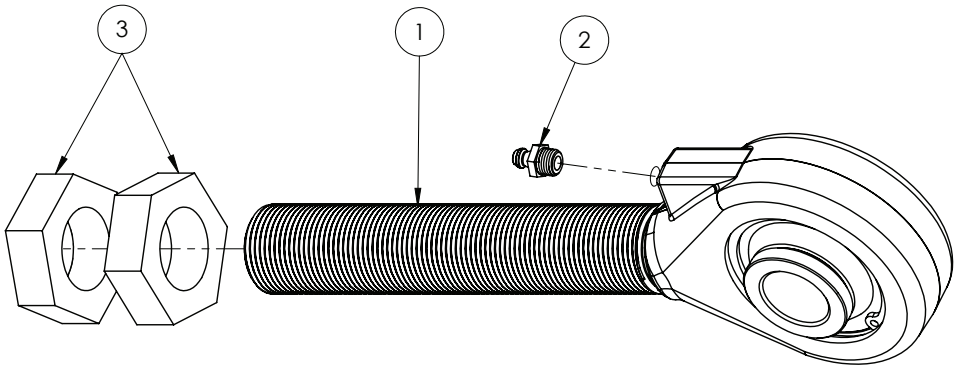

ITEM NO.	PART NUMBER	DESCRIPTION	QTY.
1	GA5078654	BEARING END, ASSEMBLY, 1 1/4-12 UNF THREAD, C/W GEH 35 ES-2RS BEARING, BUSHED DIA. 25.5	1
2	GA5069980	GREASE NIPPLE, 1/8 BSPP, STRAIGHT	1
3	GA5010963	NUT 1 1/4 UNF 12 TPI ZP LOCK NUT	2

Rose End, Forged

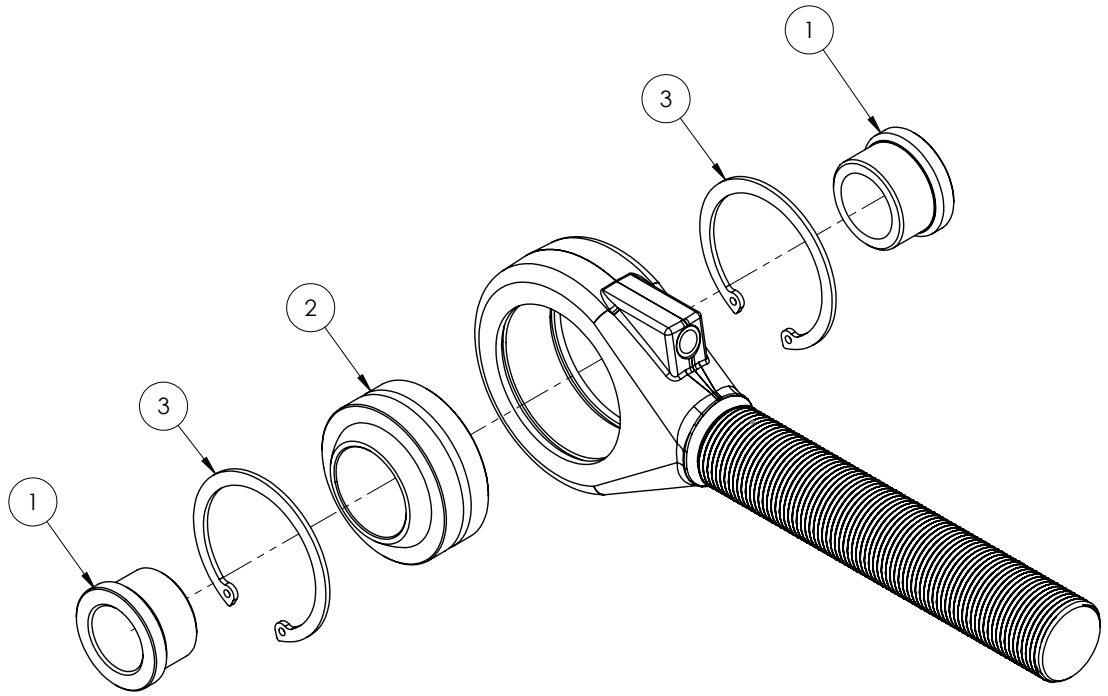

ITEM NO.	PART NUMBER	DESCRIPTION	QTY.
1	GA4583505	BEARING BUSH, FLANGED, ID 25.5, OD 35	2
2	GA5078655	BEARING, RADIAL SPHERICAL PLAIN, ID 35, OD 62, NOMINAL WIDTH 35, GEH 35 ES-2RS	1
3	GA5078656	CIRCLIP, SUIT 62mm BORE, 62MM-INT	2

48m - Boom Bearing End Assembly

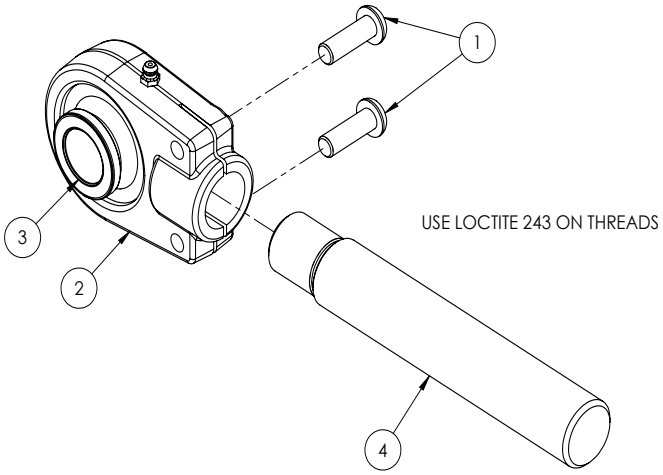

ITEM NO.	PART NUMBER	DESCRIPTION	QTY.
1	GA5048120	BHCS M10 X 30 SS A2-70	2
2	GA5052965	BEARING, ROSE END HOUSING, M28 SCREW ON, SUIT HYDRAULIC CYLINDER & DELTA LINK, INC. BUSHES	1
3	GA5021925	SMALL BEARING BUSH, SUIT SCREW ON ROSE END, HYPOWER, R-10424	2
4	GA4550645	THREADED BOOM PIVOT ADJUSTER, 1 1/4" UNF AND M28 THREADS, 48M BOOM	1

48m - Second Stage Fold - Boom Protectors

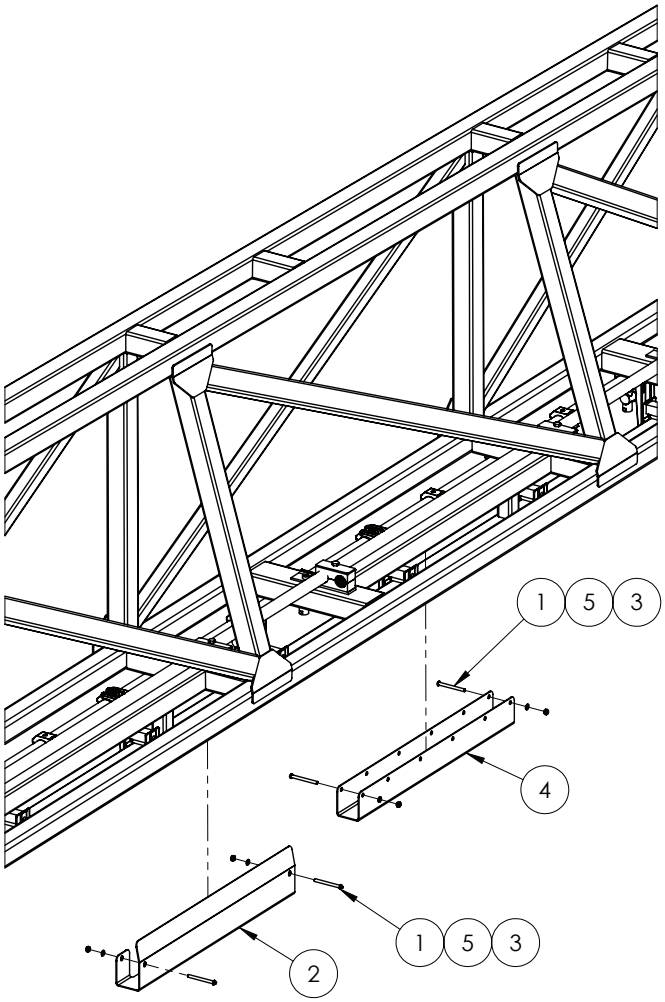

ITEM NO.	PART NUMBER	DESCRIPTION	QTY.
1	GA0500067	BHCS M6 X 65 GR12.9 ZP	4
2	GA4402215	BOOM PROTECTOR SS FITS OVER GUSSET MY17	1
3	GA5048115	NUT M6 NYLOC ZP	4
4	F70799A	PROTECTOR, BOOM CORD, SUIT 50 X 50, 600mm, SS	1
5	GA5004437	WASHER 6mm FLAT SS	4

48m - Rapid Fire Air Tank & XRT Sensor Mounting

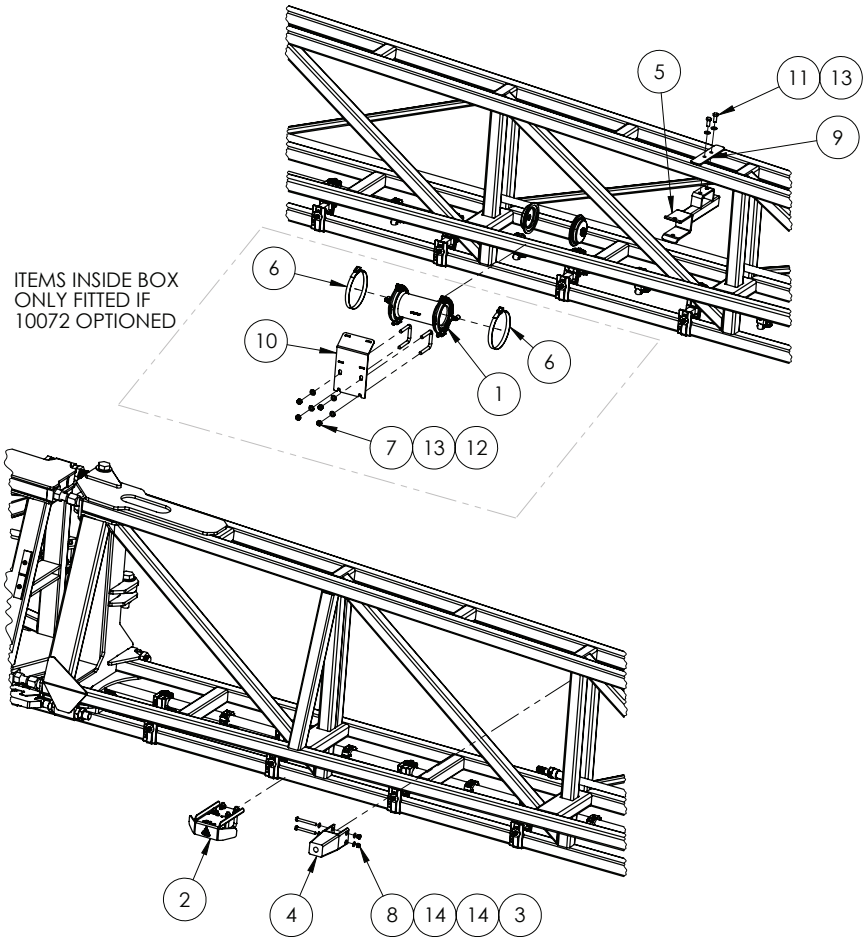

ITEM NO.	PART NUMBER	DESCRIPTION	QTY.
1	GA4949330	AIR TANK, 0.9L, PLASTIC, 10 BAR, SUIT RAPID FIRE 3TS PRO	1
2	GA4952700	ASSEMBLY DRAWING ONLY, BRACKET, SENSOR, RAVEN XRT, SUITS TRITECH MY23	1
3	GA5052600	BOLT M8 X 75 SS A2-70	2
4	GA4908815	BOOM STOPPER 110mm LONG	1
5	GA4603651	BOOM SUPPORT BRACKET, 48M, OUTER WING, MY21	1
6	GA5053945	HOSE CLAMP 51mm-130mm - QUICK RELEASE	2
7	GA5051445	NUT M10 NYLOC SS	4
8	GA5052590	NUT M8 NYLOC SS	2
9	GA4409765	PLATE, CLAMP, BOOM SUPPORT BRACKET, 48M, OUTER WING, MY21	1
10	GA4414755	PLATE, MOUNT BOOM, 3TS PRO AIR TANK	1
11	GA5006161	SET SCREW M10 X 25 GR8.8 ZP	2
12	GA5053645	U BOLT SQUARE TOP M10 X 52 X 75	2
13	GA5000117	WASHER 10mm FLAT SS HD	6
14	GA5003643	WASHER 8mm FLAT SS HD	4

Rapid Fire Air Tank Assembly

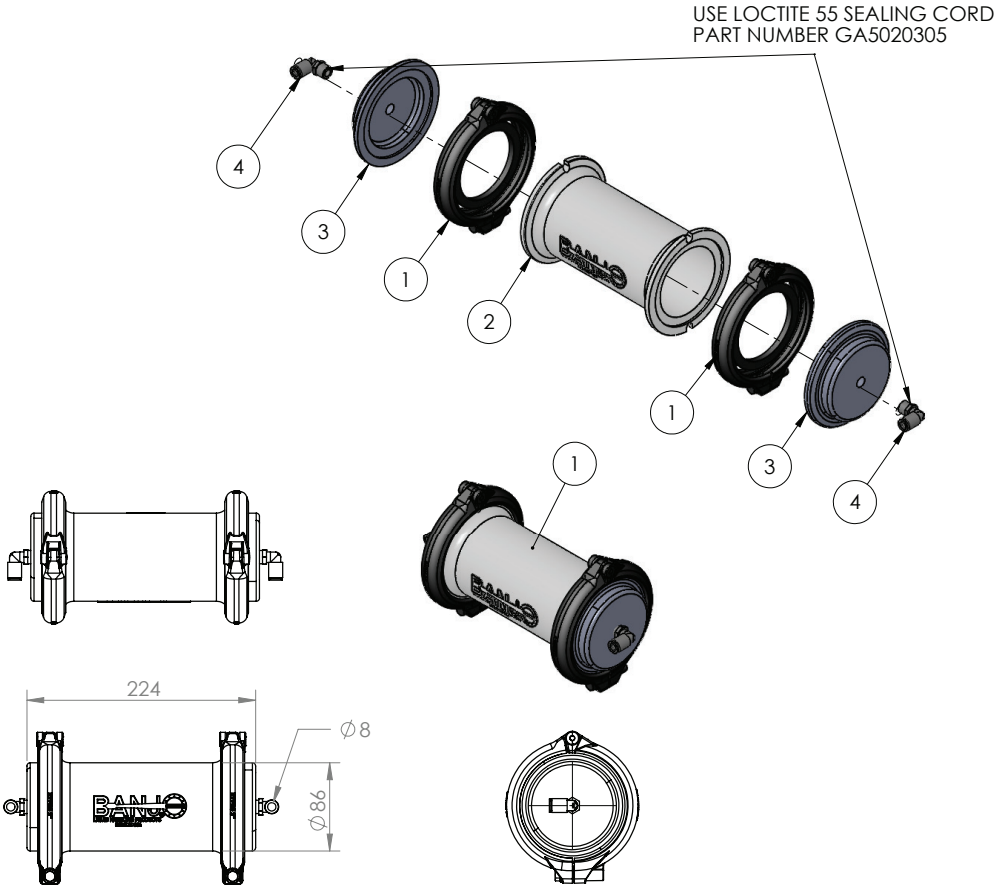

ITEM NO.	PART NUMBER	DESCRIPTION	QTY.
1	GA2000116	FLANGE CLAMP, AND GASKET, 3", SERIES 300, HYPRO	2
2	GA2000139	PLUMBING FITTING, 3" X 3" FULL PORT FLANGE X 7" LONG, BANJO M300CPG7	1
3	GA2000140	PLUMBING FITTING, 3' MANIFOLD PLUG WITH 1/4" BSP FEMALE, FLANGE, MADE FROM GA5077880 BANJO M300PLG	2
4	GA5052690	PNEUMATIC FITTING, ELBOW, 90 DEGREE, 1/4 BSP MALE X 8mm PUSH TYPE, METAL	2

Raven XRT Sensor & Bracket Assembly

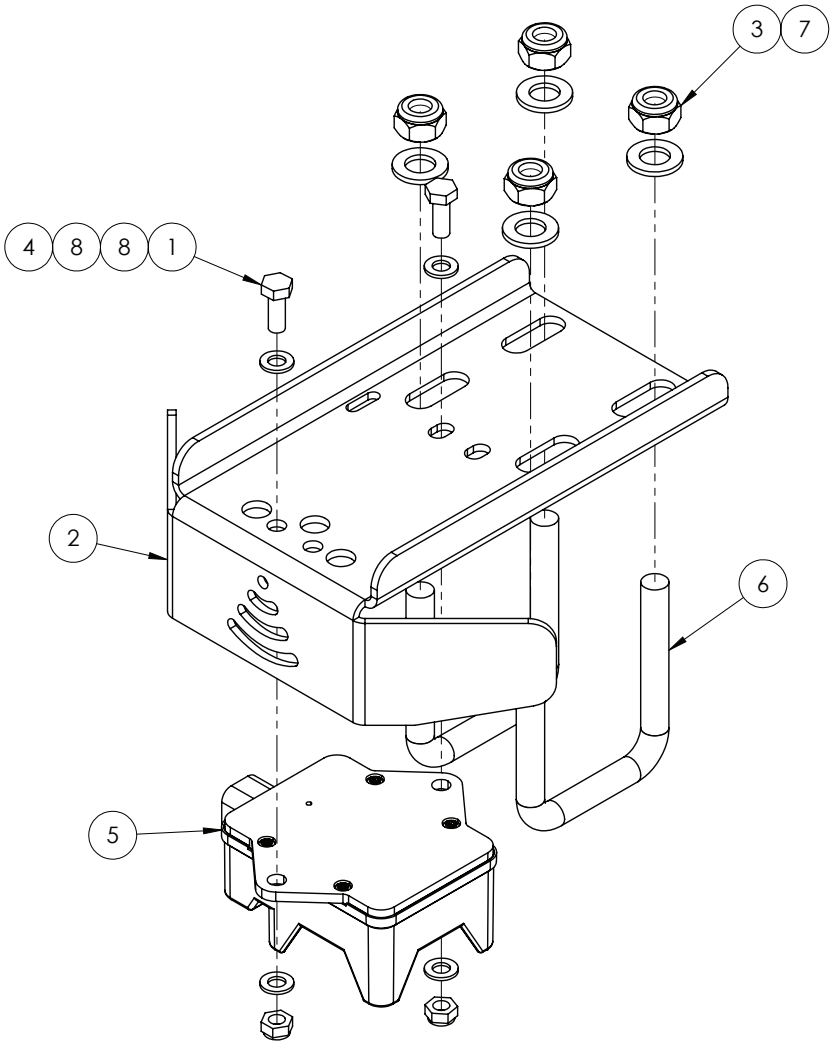

ITEM NO.	PART NUMBER	DESCRIPTION	QTY.
1	GA5011395	BOLT M6 X 16 SS A2-70	2
2	GA4411280	BRACKET, RAVEN XRT RADAR SENSOR / LIGHT MOUNT, BOOM, WITH FRONT SHIELD	1
3	GA5051445	NUT M10 NYLOC SS	4
4	GA5004429	NUT M6 NYLOC SS	2
5	GA3000382	SENSOR, RAVEN XRT BOOM HEIGHT RADAR, 063- 0173-962	1
6	GA5053645	U BOLT SQUARE TOP M10 X 52 X 75	2
7	GA5000117	WASHER 10mm FLAT SS HD	4
8	GA5004437	WASHER 6mm FLAT SS	4

48m - Third Stage Fold - Cylinder Assembly

NOTE:

IF G8 ITEM (6) FITTED

IF G6/ PRAIRIE PRO ITEM (7) FITTED

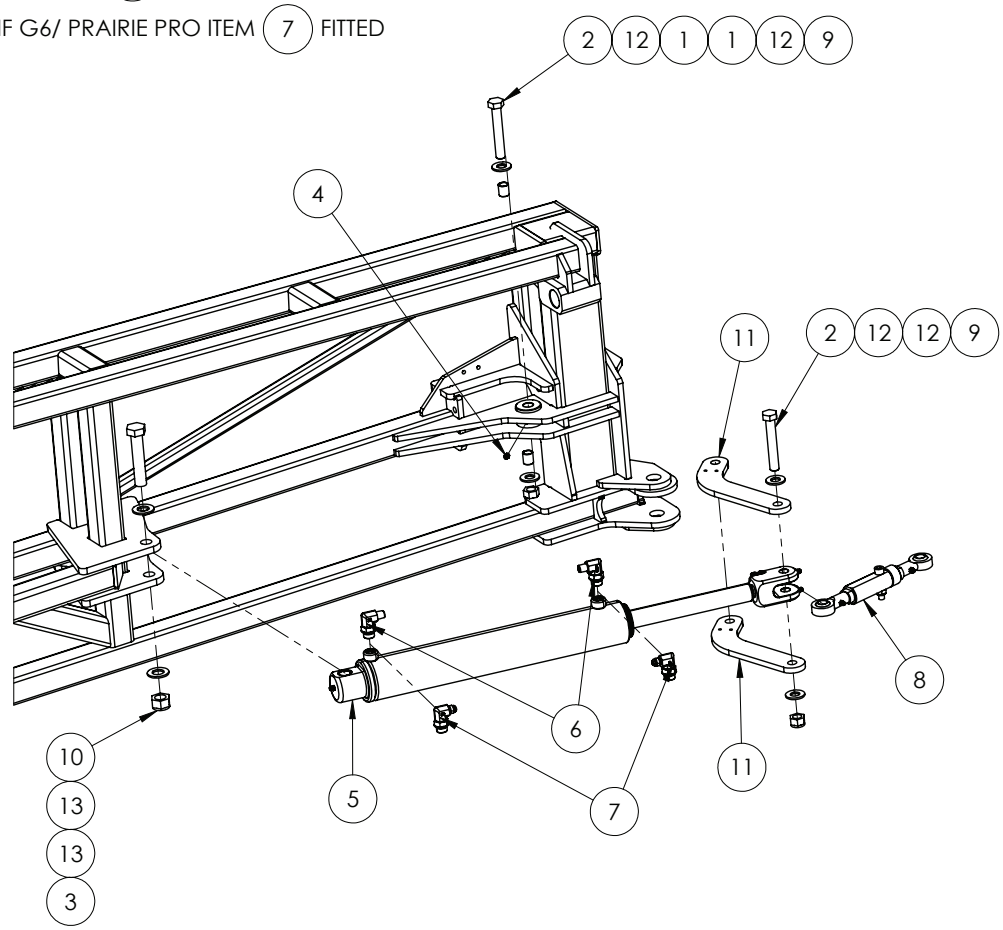

Quantities shown are per side.

ITEM NO.	PART NUMBER	DESCRIPTION	QTY.
1	GA1700013	BEARING, GLACIER BUSH, 16mm ID X 20mm LONG`	2
2	GA5011269	BOLT M16 X 100 GR8.8 ZP	2
3	GA5048355	BOLT M20 X 100 GR8.8 ZP	1
4	GA5050450	GREASE NIPPLE, 6mm	1
5	GA3501082	HYDRAULIC CYLINDER, 2.5” X 1.25” X 395, 3RD STAGE FOLD, 48m	1
6	GA3500348	HYDRAULIC ADAPTOR, ELBOW, 90 DEGREE, 1/4” BSPT MALE X 3/4” UN MALE O-RING	2
7	GA3500700	HYDRAULIC ADAPTOR, ELBOW, 90 DEGREE, 9/16” JIC MALE X 3/4” UN MALE O-RING, S91-0912	2
8	GA4902265	LINK ASSEMBLY, THIRD STAGE FOLD, 48M BOOM	1
9	GA5012463	NUT M16 NYLOC SS	2
10	GA5048125	NUT M20 NYLOC COARSE ZP	1
11	GA4401080	PLATE, FOLD LINK, OUTER FOLD, 48m BOOM	2
12	GA5001043	WASHER 16mm FLAT SS HD	4
13	GA5001741	WASHER 20mm FLAT SS HD	2

Continued over page

48m - Third Stage Fold - Link Assembly

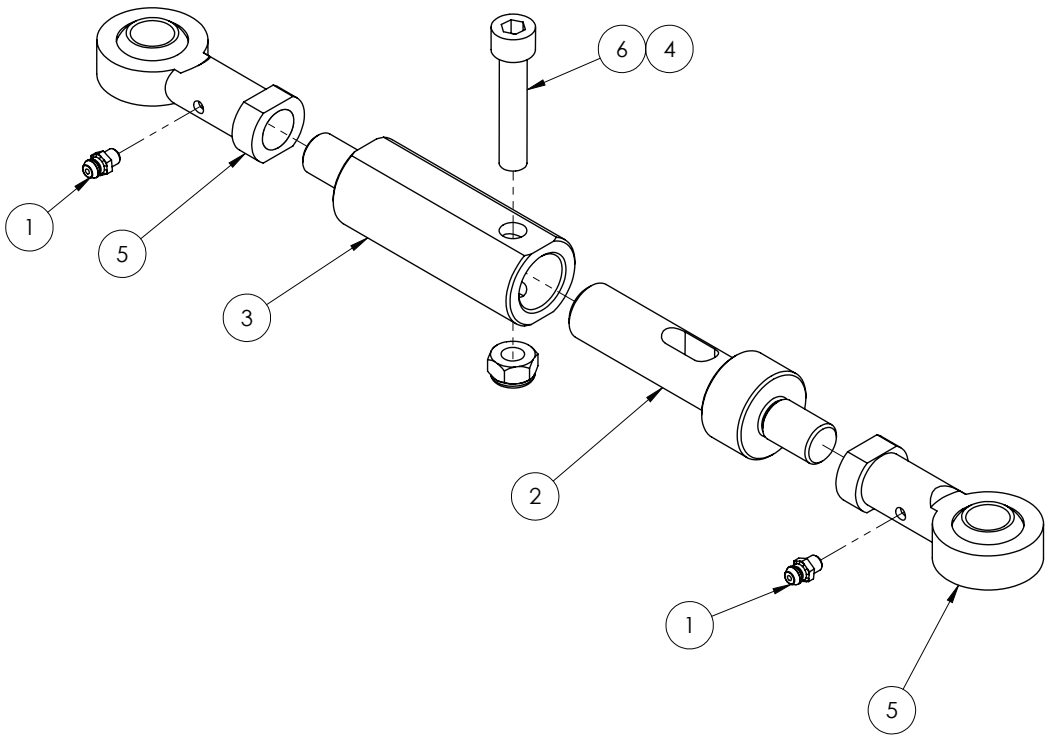

ITEM NO.	PART NUMBER	DESCRIPTION	QTY.
1	GA5050450	GREASE NIPPLE, 6mm	2
2	GA4550905	LINK, INNER, THIRD FOLD, 48m BOOM	1
3	GA4550900	LINK, OUTER, THIRD FOLD, 48m BOOM	1
4	GA5000141	NUT M10 NYLOC ZP	1
5	GA5014469	ROD END FEMALE 16mm	2
6	GA5049990	SHCS M10 X 50 GR 12.9 ZP	1

48m - Third Stage Fold - Rose Ends

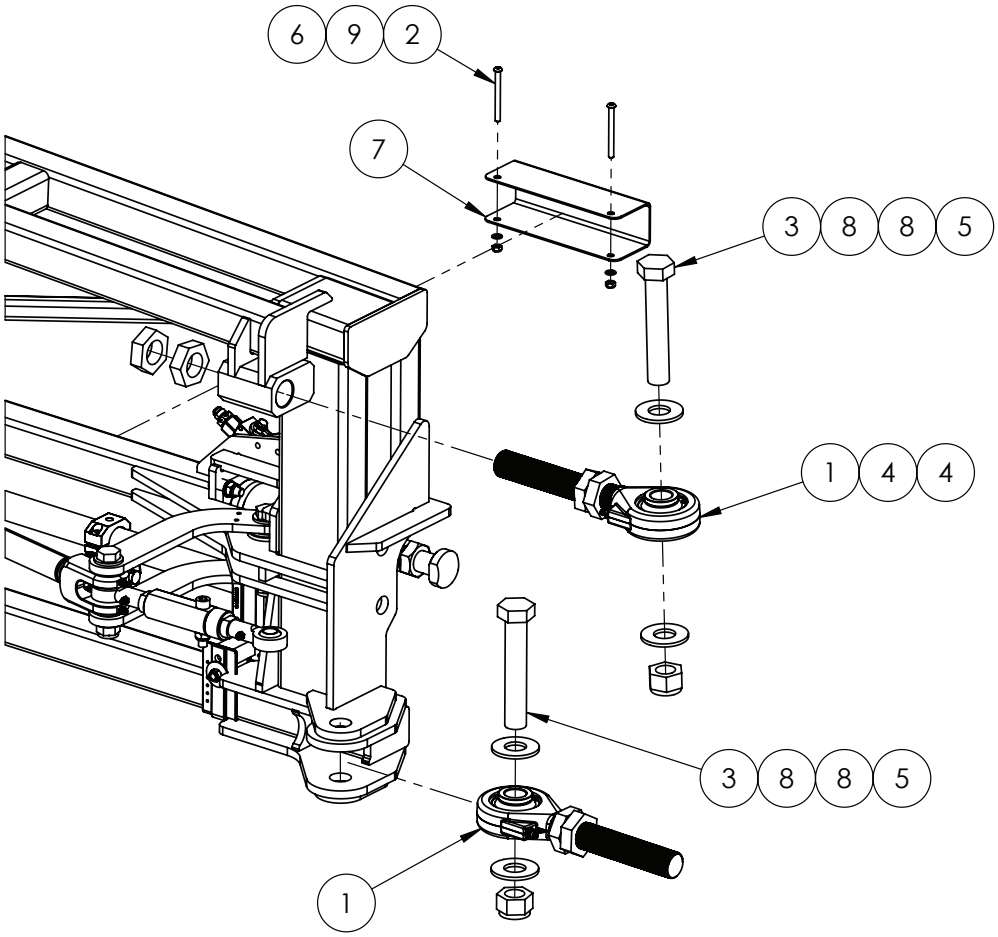

ITEM NO.	PART NUMBER	DESCRIPTION	QTY.
1	GA4914375	ASSEMBLY DRAWING ONLY, ROSE END BEARING, BOOM 48M, FORGED	2
2	GA0500067	BHCS M6 X 65 GR12.9 ZP	2
3	GA5048175	BOLT 1 UNC X 5 1/2 GR8 ZP	2
4	GA5010963	NUT 1 1/4 UNF 12 TPI ZP LOCK NUT	2
5	GA5012439	NUT 1" NYLOC UNC ZP	2
6	GA5048115	NUT M6 NYLOC ZP	2
7	F70294A	PROTECTOR, BOOM CORD, SUIT 50 X 50, 200mm, SS	1
8	GA5017659	WASHER 1 FLAT ZP HD (5mm THICK)	4
9	GA5004437	WASHER 6mm FLAT SS	2

48m - Third Stage Fold - Rose End Linkage

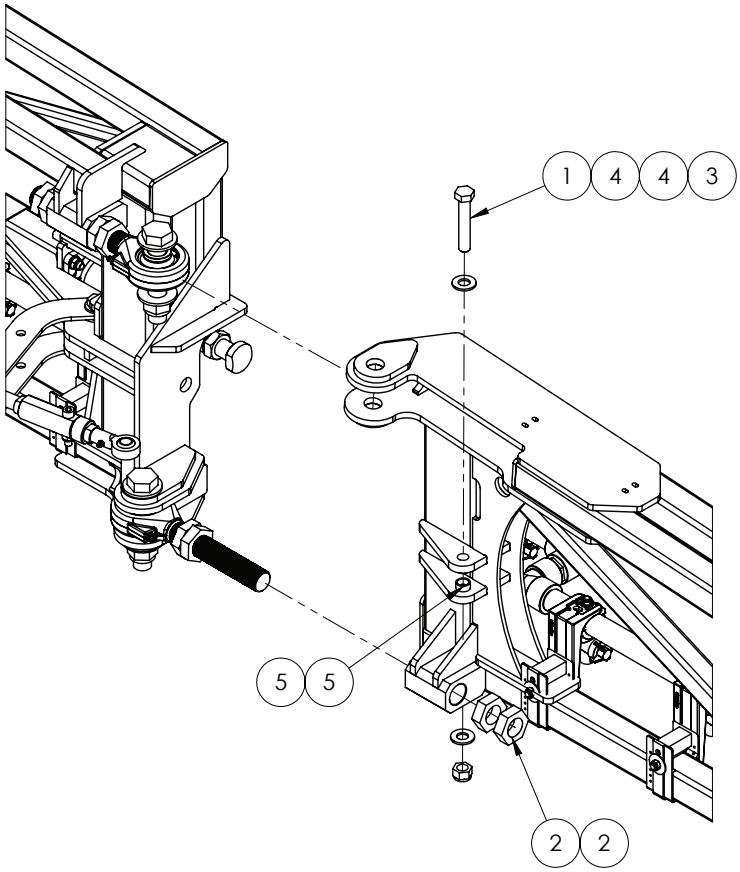

ITEM NO.	PART NUMBER	DESCRIPTION	QTY.
1	GA5011297	BOLT M16 X 90 GR8.8 ZP	1
2	GA5010963	NUT 1 1/4 UNF 12 TPI ZP LOCK NUT	2
3	GA5012463	NUT M16 NYLOC SS	1
4	GA5001043	WASHER 16mm FLAT SS HD	2
5	GA4552070	CRUSH TUBE 16.2X20.5X9.5	2

48m - Third Stage Fold - Cylinder Mounting Assembly

NOTE:

IF G8 ITEM (5) FITTED

IF G6/ PRAIRIE PRO ITEM (6) FITTED

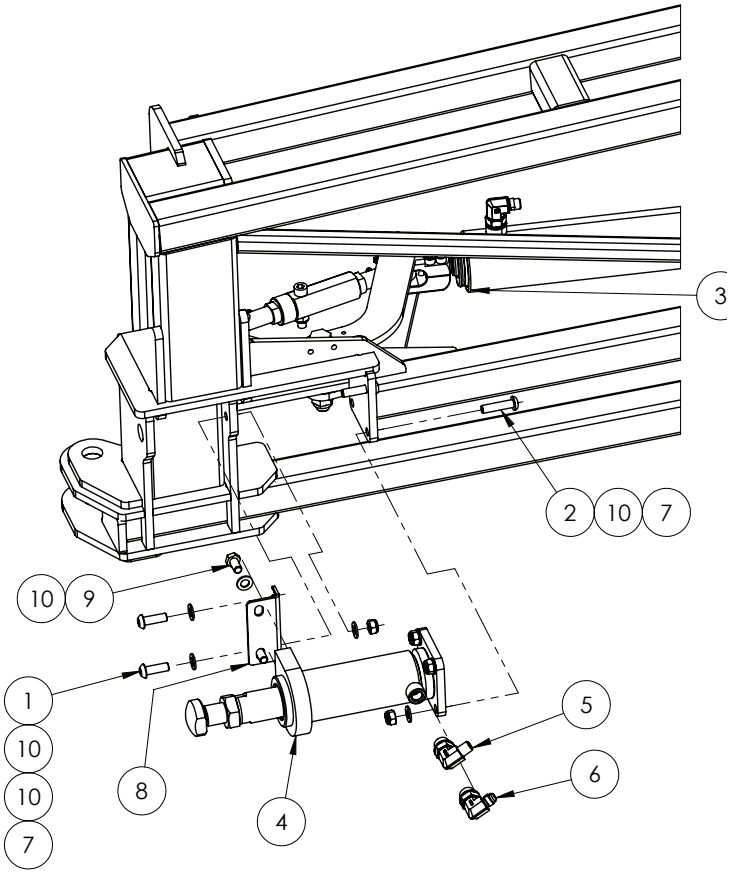

ITEM NO.	PART NUMBER	DESCRIPTION	QTY.
1	GA5048120	BHCS M10 X 30 SS A2-70	2
2	GA5006059	BHCS M10 X 40 GR12.9 ZP	4
3	GA3501082	HYDRAULIC CYLINDER, 2.5” X 1.25” X 395, 3RD STAGE FOLD, 48m	1
4	GA3500479	HYDRAULIC CYLINDER, 2”, BORE 1.5”, ROD, 80mm STROKE, BREAKAWAY, 48M BOOM	1
5	GA3500348	HYDRAULIC ADAPTOR, ELBOW, 90 DEGREE, 1/4” BSPT MALE X 3/4” UN MALE O-RING	3
6	GA3500700	HYDRAULIC ADAPTOR, ELBOW, 90 DEGREE, 9/16” JIC MALE X 3/4” UN MALE O-RING, S91-0912	3
7	GA5051445	NUT M10 NYLOC SS	6
8	GA4401860	PLATE, MOUNT BRACKET, BREAKAWAY CYLINDER SUPPORT, 48m BOOM	1
9	GA5006113	SET SCREW M10 X 20 GR8.8 ZP	2
10	GA5000117	WASHER 10mm FLAT SS HD	10

48m - Breakaway Chain Assembly

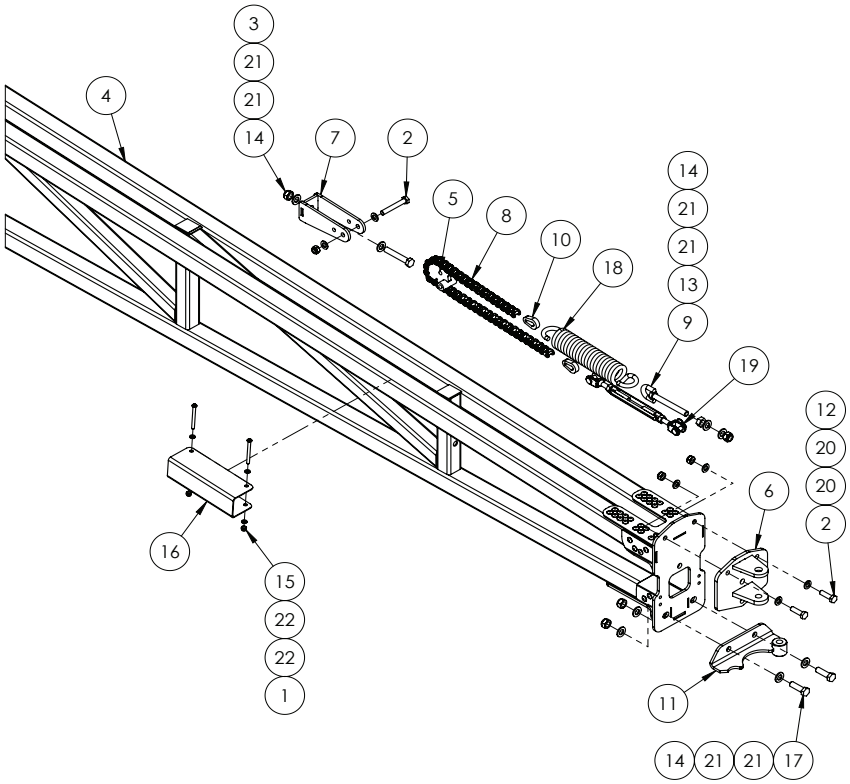

ITEM NO.	PART NUMBER	DESCRIPTION	QTY.
1	GA0500067	BHCS M6 X 65 GR12.9 ZP	2
2	GA5011163	BOLT M10 X 70 GR8.8 ZP	3
3	GA5000347	BOLT M12 X 70 GR8.8 ZP	1
4	GA4603625	BOOM WING, OUTER, 48M, LH, ALUMINIUM, ANGLE FOLD	1
5	GA4659800	BREAK AWAY CENTRE PIVOT FAB ASSEM	1
6	GA4656131	BREAKAWAY MK3.1 ROSE END CLEVIS	1
7	GA4659805	BREAKAWAY MOUNT	1
8	GA5068985	CHAIN, 5/8”, 41 PITCH BREAKAWAY HINGE	1
9	GA5075150	EYE BOLT 12mm X 100mm SHORT	1
10	GA4505695	LINK PLATE CHAIN END	2
11	GA4659336	LOWER PIVOT BRACKET MK3.3	1
12	GA5000141	NUT M10 NYLOC ZP	3
13	GA5000559	NUT M12 HEX ZP	1
14	GA5012461	NUT M12 NYLOC ZP	4
15	GA5048115	NUT M6 NYLOC ZP	2
16	F70294A	PROTECTOR, BOOM CORD, SUIT 50 X 50, 200mm, SS	1
17	GA5000319	SET SCREW M12 X 40 GR8.8 ZP	2
18	GA5025170	SPRING, TENSION, 50 OD X 260 LONG X 9mm, BREAKAWAY, MY20	1
19	GA5070505	TURNBUCKLE, S/S 10.mm JAW/JAW	1
20	GA5000117	WASHER 10mm FLAT SS HD	6
21	GA5000577	WASHER 12mm FLAT SS HD	8
22	GA5004437	WASHER M6 FLAT SS HD	4

48m - Breakaway - Pivot Assembly

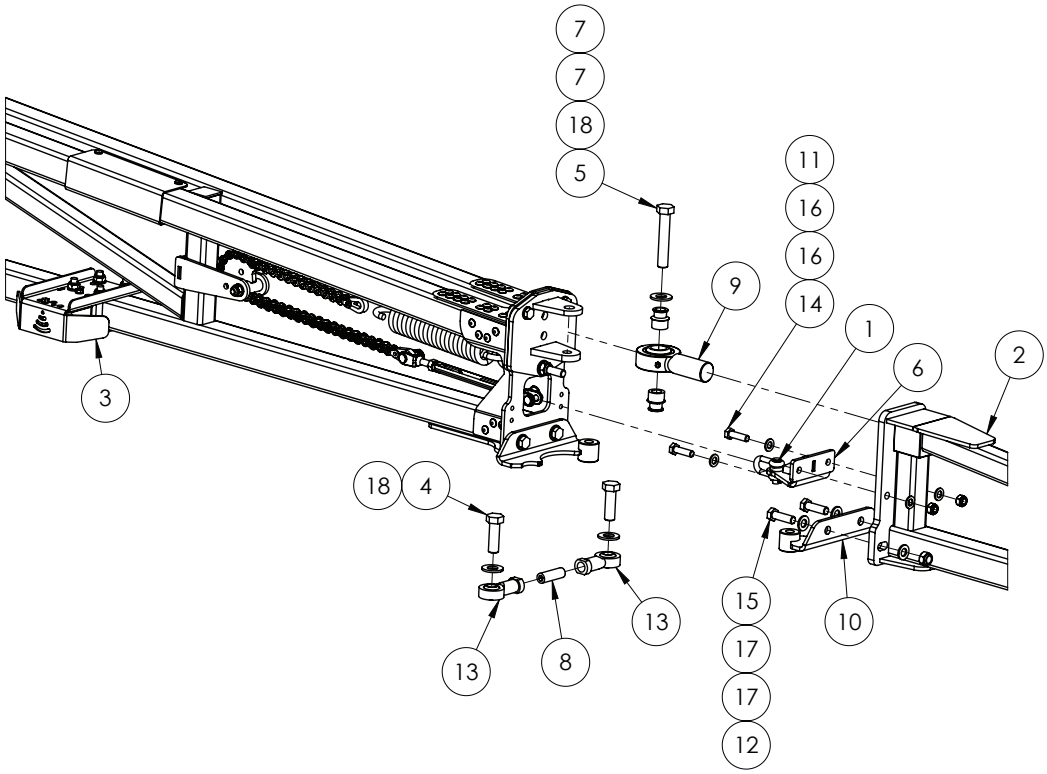

ITEM NO.	PART NUMBER	DESCRIPTION	QTY.
1	GA5071060	10mm UTILITY CLEVIS 24CST002	1
2	GA4656123	ALUM BREAKAWAY 2M, SUIT 3D BREAKAWAY 2.0	1
3	GA4952700	ASSEMBLY DRAWING ONLY, BRACKET, SENSOR, RAVEN XRT, SUITS TRITECH MY23	1
4	GA5000931	BOLT M16 X 50 GR8.8 ZP	2
5	GA5011297	BOLT M16 X 90 GR8.8 ZP	1
6	GA4659810	BREAKAWAY ROSE END CLEVIS 3D 2.0	1
7	GA4552225	BREAKAWAY ROSE END SPACER BUSH 3D 2.0	2
8	GA5071105	GRUB SCREW M16 X 50	1
9	GA5070530	LARGE ROSE END 1" X 1 1/4" UNF BB074-VM16	1
10	GA4659336	LOWER PIVOT BRACKET MK3.3	1
11	GA5000141	NUT M10 NYLOC ZP	2
12	GA5012461	NUT M12 NYLOC ZP	2
13	GA5014469	ROD END FEMALE 16mm	2
14	GA5006111	SET SCREW M10 X 35 GR8.8 ZP	2
15	GA5000319	SET SCREW M12 X 40 GR8.8 ZP	2
16	GA5000117	WASHER 10mm FLAT SS HD	4
17	GA5000577	WASHER 12mm FLAT SS HD	4
18	GA5001043	WASHER 16mm FLAT SS HD	3

48m - Nozzle Body & Blue LED Work Light Mounting

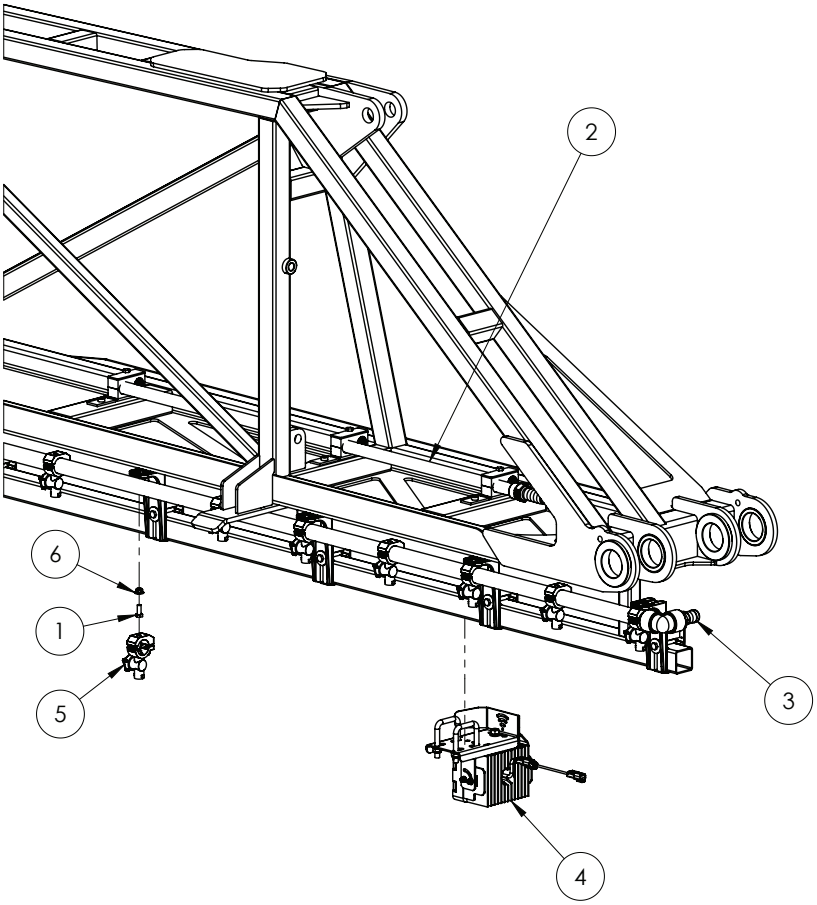

See Plumbing Chapter for Boom Polys

ITEM NO.	PART NUMBER	DESCRIPTION	QTY.
1	GA5004085	BOLT M8 X 20 GR8.8 ZP	35
2	GA4951805	BOOM POLY ASSEMBLY, 48M, INNER SECTION, BOOM RECIRCULATION	1
3	GA4951720	BOOM POLY ASSEMBLY. BARE, 48M, LH INNER	1
4	GA4912810	BOOM LIGHT ASSEMBLY, BLUE, SUIT 50mm BOOM MOUNT	1
5	GA5077962	NOZZLE BODY, SINGLE, 1", TEEJET, QJ17560A-1-NYB	35
6	GA5070710	NUT WITH FLANGE, PLASTIC, M8 X 1.25	35

Work Light - Blue LED

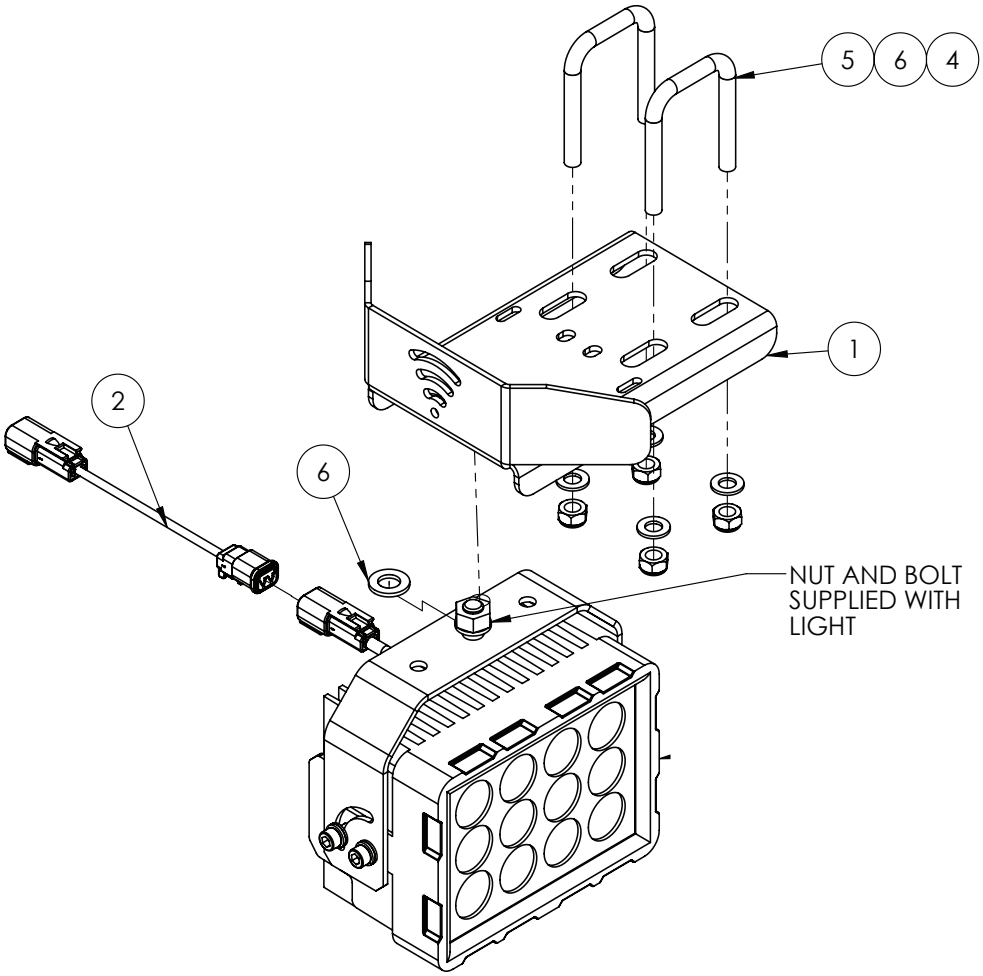

NOTE:
M8 U BOLT FITTED TO RIVX BOOM
M10 U BOLT FITTED TO 48M BOOM

ITEM NO.	PART NUMBER	DESCRIPTION	QTY.
1	GA4411280	BRACKET, RAVEN XRT RADAR SENSOR / LIGHTMOUNT, BOOM, WITH FRONT SHIELD	1
2	GA3000574	ELECTRICAL HARNESS, RCM NOZZLE EXTENSION, 1000mm	1
3	GA3000333	LIGHT, LED, BLUE, SPOT BEAM, 60 WATT, GLASS FRONT	1
4	GA5000141	NUT M10 NYLOC ZP	4
	GA5052590	NUT M8 NYLOC SS	4
5	GA5053645	U BOLT SQUARE TOP M10 X 52 X 75	2
	GA0500084	U BOLT SQUARE TOP M8 X 42 X 65, 304 SS	2
6	GA5000117	WASHER 10mm FLAT SS HD	5
	GA5003643	WASHER 8mm FLAT SS HD	4

48m - Nozzle Bracket & Boom Poly Clamps

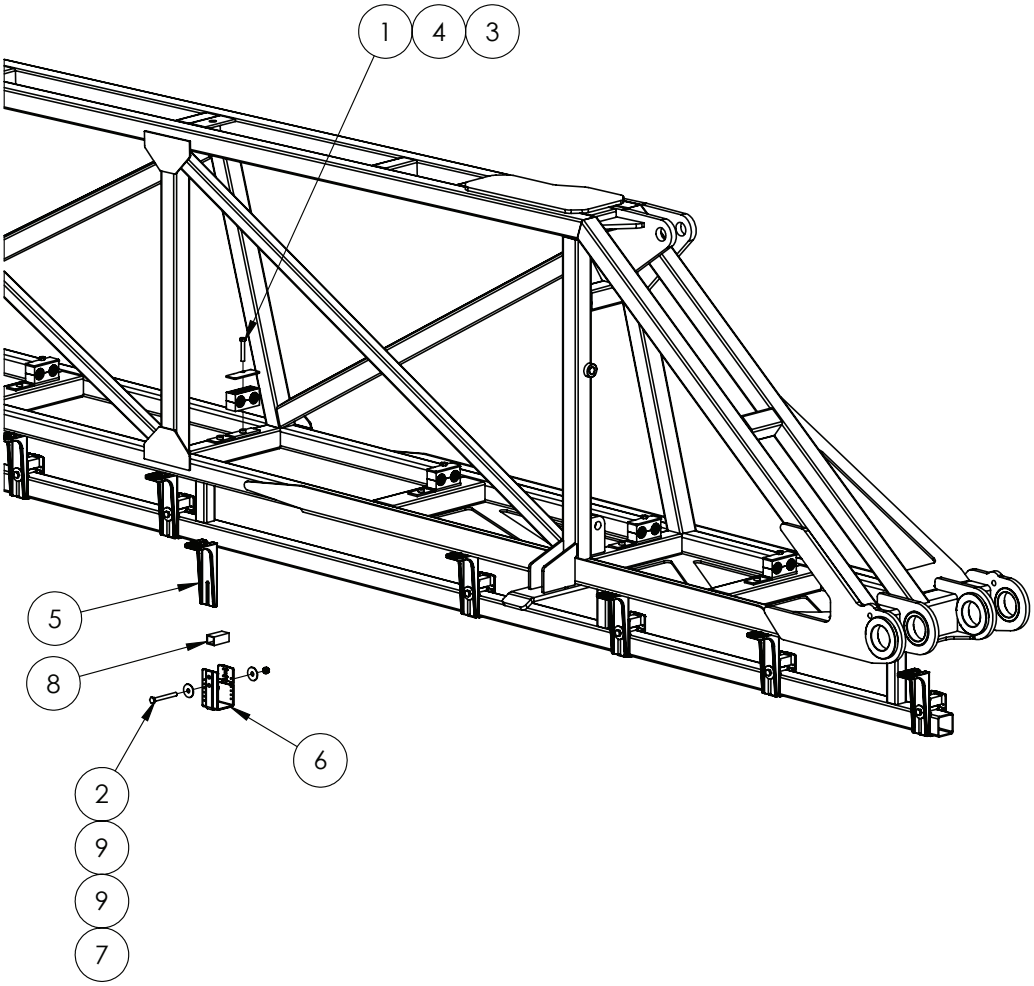

See Plumbing Chapter for Boom Polys

ITEM NO.	PART NUMBER	DESCRIPTION	QTY.
1	GA5004727	BOLT M8 X 50 GR8.8 ZP	12
2	GA5052600	BOLT M8 X 75 SS A2-70	18
3	GA5078038	MOUNTING CLAMP, DOUBLE TYPE, JAW, PAIR, GROUP 4, 28mm, RCD-28J	12
4	GA5078049	MOUNTING CLAMP, DOUBLE TYPE, PLATE, TOP, GROUP 4, RCD-4PT	12
5	GA5018258	NOZZLE BRACKET, PLASTIC, L SHAPE, LONG	18
6	GA5018259	NOZZLE BRACKET, PLASTIC, U SHAPE	18
7	GA5052590	NUT M8 NYLOC SS	18
8	GA5066965	SPACER SUIT NOZZLE BRACKETS	18
9	GA5003645	WASHER FLAT SS 5-16 X 1 1-4	38

48m - Nozzle Bracket Extension Assembly

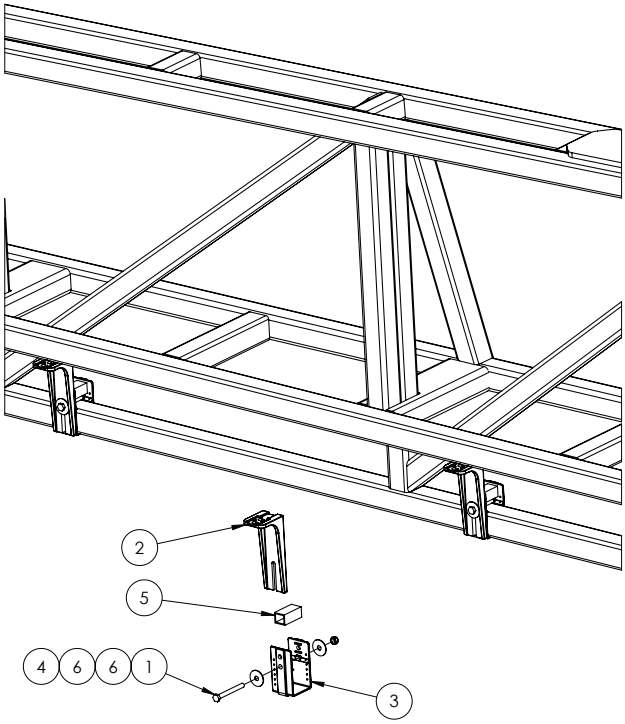

See Plumbing Chapter for Boom Polys

ITEM NO.	PART NUMBER	DESCRIPTION	QTY.
1	GA5052600	BOLT M8 X 75 SS A2-70	16
2	GA5018258	NOZZLE BRACKET, PLASTIC, L SHAPE, LONG	16
3	GA5018259	NOZZLE BRACKET, PLASTIC, U SHAPE	16
4	GA5052590	NUT M8 NYLOC SS	16
5	GA5066965	SPACER SUIT NOZZLE BRACKETS	16
6	GA5003645	WASHER FLAT SS 5-16 X 1 1-4	32

48m - Middle Section Boom Wing, Boom Poly Assemblies

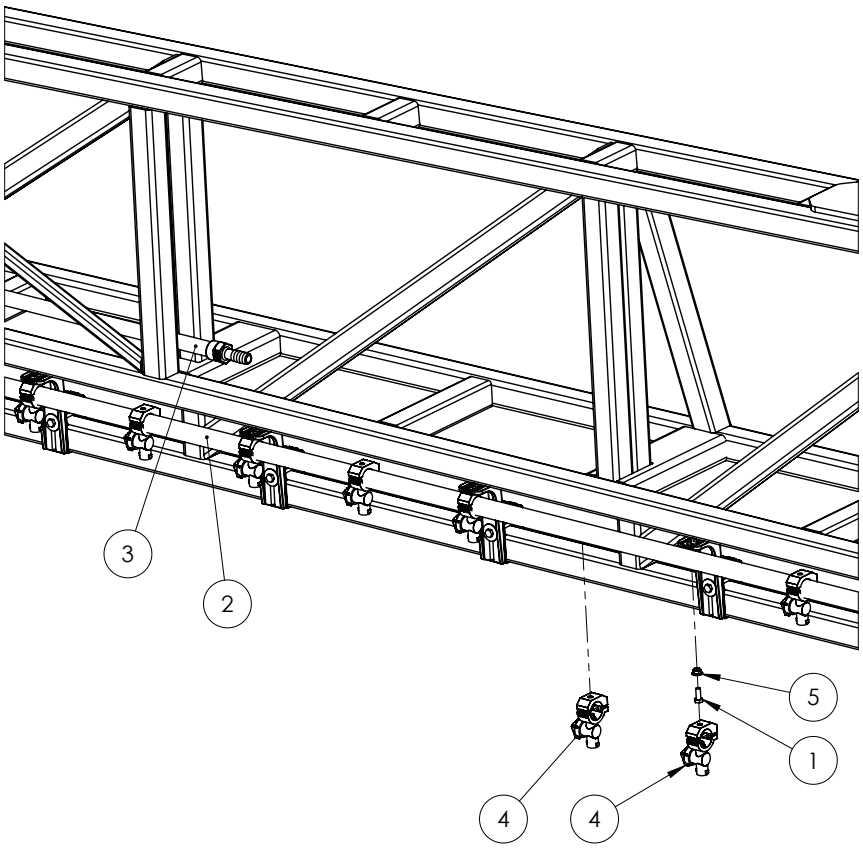

ITEM NO.	PART NUMBER	DESCRIPTION	QTY.
1	GA5004085	BOLT M8 X 20 GR8.8 ZP	16
2	GA4951730	BOOM POLY ASSEMBLY, BARE, 48M, LH MIDDLE	1
3	GA4951810	BOOM POLY ASSEMBLY, 48M, MIDDLE SECTION, BOOM RECIRCULATION	1
4	GA5077962	NOZZLE BODY, SINGLE, 1", TEEJET, QJ17560A-1-NYB	32
5	GA5070710	NUT WITH FLANGE, PLASTIC, M8 X 1.25	16

48m - Outer Boom Wing, Boom Poly Assemblies

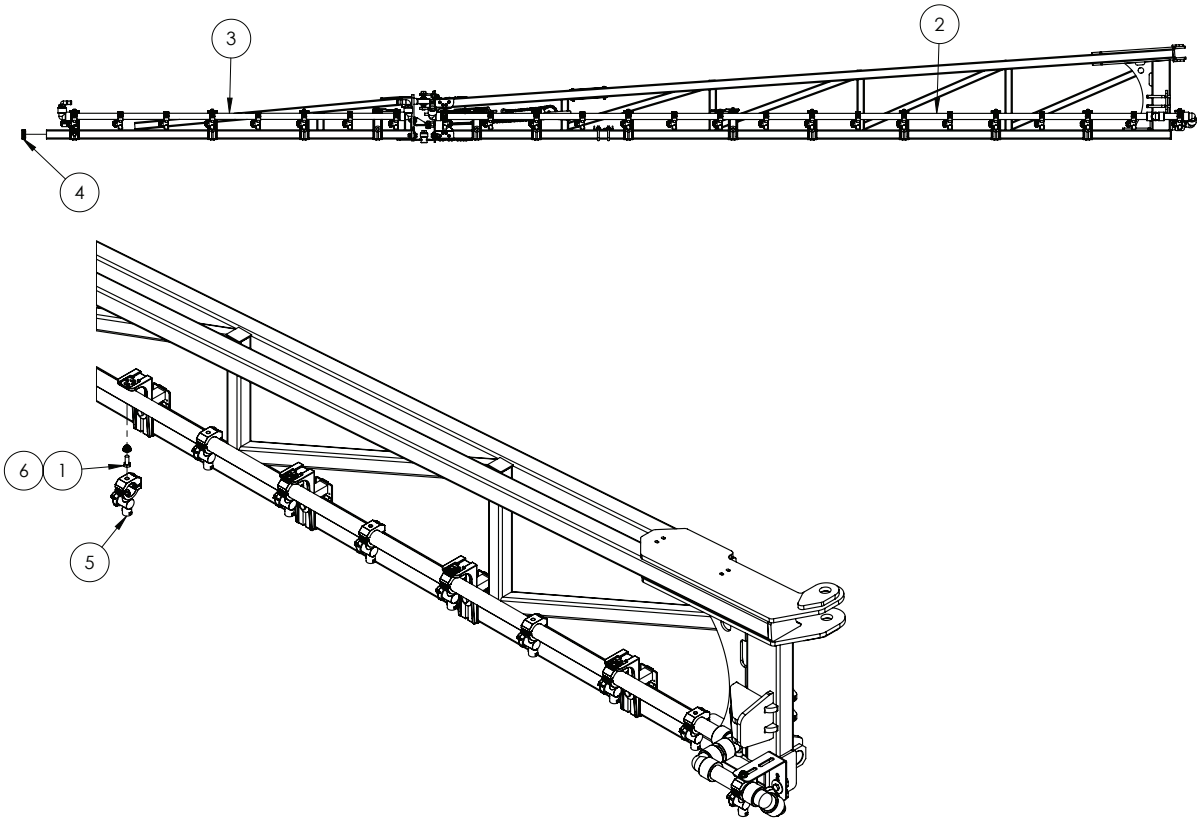

ITEM NO.	PART NUMBER	DESCRIPTION	QTY.
1	GA5004085	BOLT M8 X 20 GR8.8 ZP	13
2	GA4951740	BOOM POLY ASSEMBLY, BARE, 48M, LH OUTER	1
3	GA4951750	BOOM POLY ASSEMBLY, 48M, LH BREAKAWAY SECTION	1
4	GA5024720	END CAP, PLASTIC, BLACK, INSERT, RHS. 50 X 50, 2.4 - 4.0mm WALL	1
5	GA5077962	NOZZLE BODY, SINGLE, 1", TEEJET, QJ17560A-1-NYB	24
6	GA5070710	NUT WITH FLANGE, PLASTIC, M8 X 1.25	13

48m - Breakaway - Nozzle Body Brackets

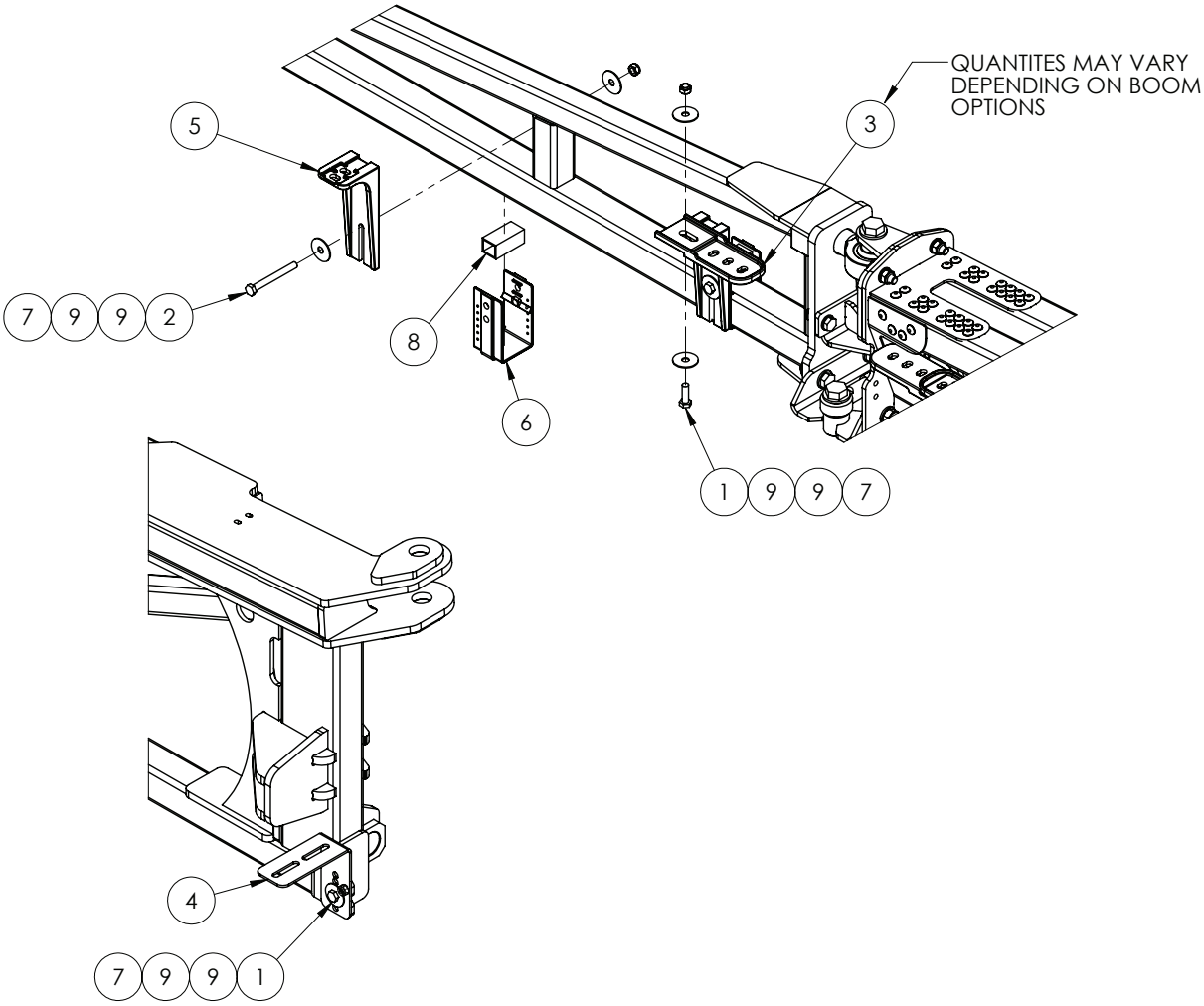

ITEM NO.	PART NUMBER	DESCRIPTION	QTY.
1	GA5004713	BOLT M8 X 25 SS A2-70	5
2	GA5052600	BOLT M8 X 75 SS A2-70	12
3	GA5018255	BRACKET, NOZZLE EXTENSION, PLASTIC	4
4	GA4505515	NOZZLE BRACKET L LONG SS	1
5	GA5018258	NOZZLE BRACKET, PLASTIC, L SHAPE, LONG	12
6	GA5018259	NOZZLE BRACKET, PLASTIC, U SHAPE	12
7	GA5052590	NUT M8 NYLOC SS	17
8	GA5066965	SPACER SUIT NOZZLE BRACKETS	10
9	GA5003645	WASHER FLAT SS 5-16 X 1 1-4	33

48m - Boom Wings Inner - Steel

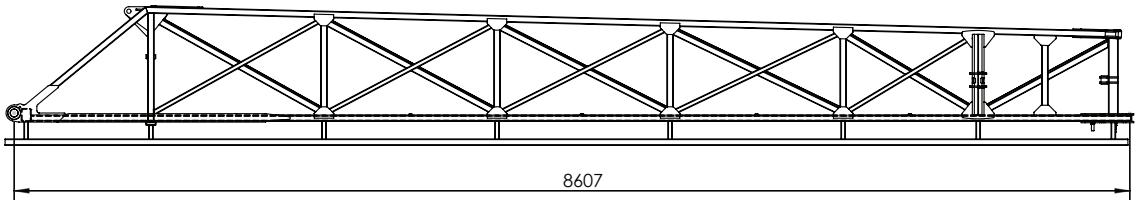

PART NUMBER	DESCRIPTION
GA4600635	BOOM INNER 48M LH - 8607 MM
GA4600640	BOOM INNER 48M RH - 8607 MM

48m - Boom Wings Mid & Outer - Aluminium

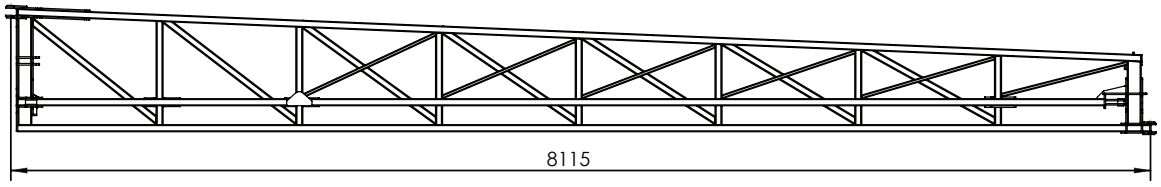

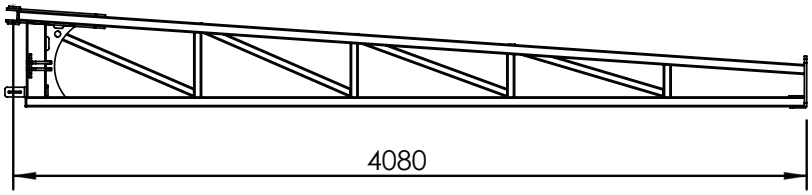

PART NUMBER	DESCRIPTION
GA4600650	BOOM MID, 48M ALUMINIUM RH - 8115 MM, (UP TO S/N 203343)
GA4603620	BOOM MID, 48M ALUMINIUM RH - 8115MM, (FROM S/N 203344 ON)
GA4600645	BOOM MID, 48M ALUMINIUM LH - 8115 MM, (UP TO S/N 203343)
GA4603615	BOOM MID, 48M ALUMINIUM LH - 8115MM, (FROM S/N 203344 ON)
GA4600660	BOOM OUTER, 48M ALUMINIUM RH - 4080MM (UP TO S/N 203343)
GA4603630	BOOM OUTER, 48M ALUMINIUM RH - 4080MM, (FROM S/N 203344 ON)
GA4600655	BOOM OUTER, 48M ALUMINIUM LH - 4080MM, (UP TO S/N 203343)
GA4603625	BOOM OUTER, 48M ALUMINIUM LH - 4080MM, (FROM S/N 203344 ON)

48m - Breakaway Aluminium Tip

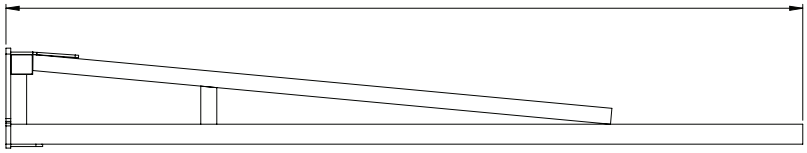

PART NUMBER	DESCRIPTION
GA4656123	ALUM BREAKAWAY 2M, SUIT 3D BREAKAWAY 2.0

48m - Boom Bumper & Protectors

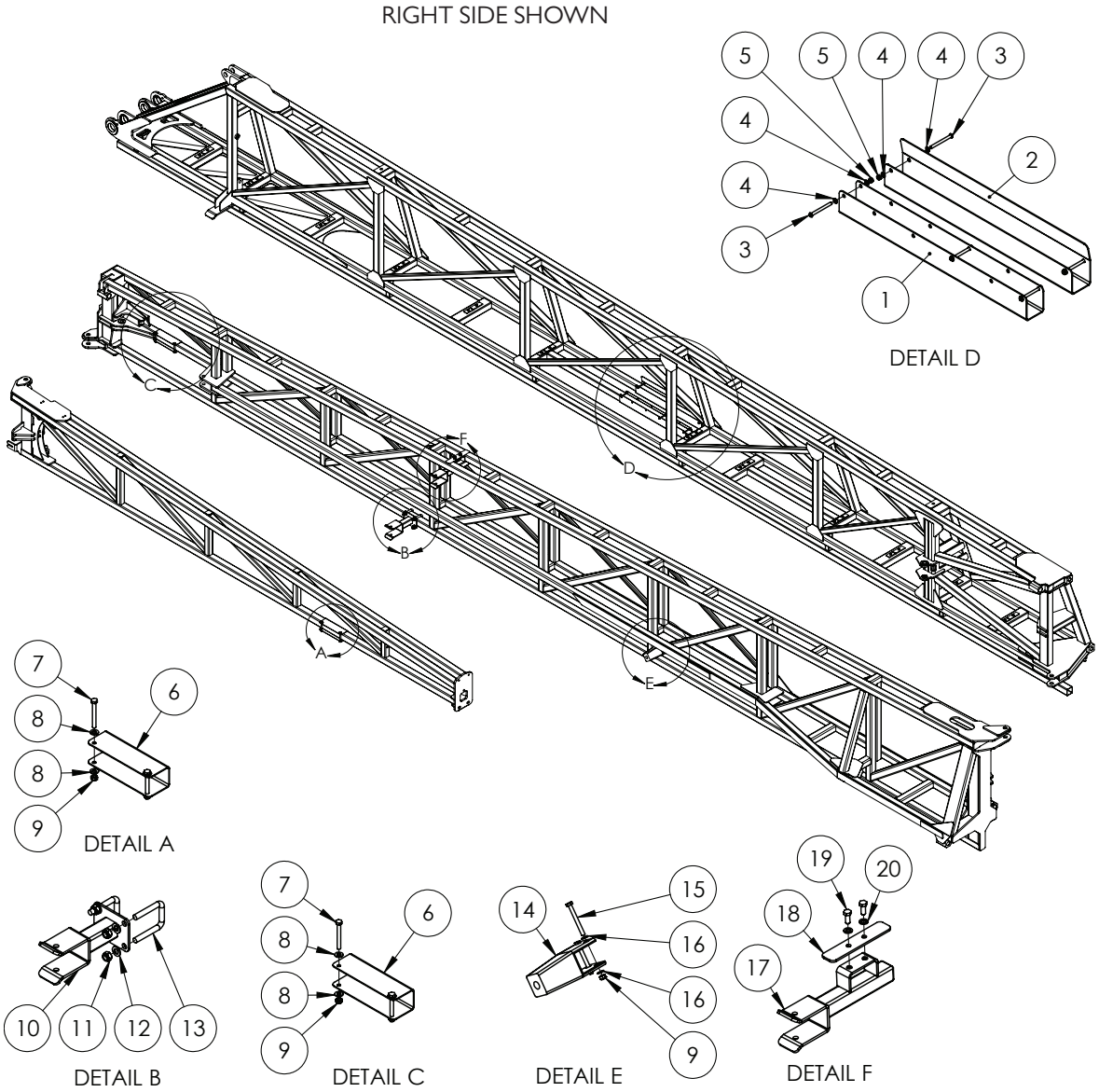

Quantities Shown Per Side

ITEM NO.	PART NUMBER	DESCRIPTION	QTY.
1	F70799A	PROTECTOR, OUTER WING, SUIT 50 X 50 RHS, 600 MM LONG, 2MM SS	1
2	GA4505972	BOOM PROTECTOR SS FITS OVER GUSSET	1
3	GA0500067	BHCS M6 X 65 GR12.9 ZP	5
4	GA5004437	WASHER 6MM FLAT SS	10
5	GA5048115	NUT M6 NYLOC ZP	5
6	F70294A	BOOM WING PROTECTOR SUIT 50 X 50 200MM LONG (2MM SS)	2
7	GA5004737	BOLT M8 X 70 SS A2-70	4
8	GA5003643	WASHER 8MM FLAT SS HD	8
9	GA5052590	NUT M8 NYLOC SS	6
10	GA4601280	BOOM FOLD SUPPORT BRACKET, 48M	1

Continued over page

ITEM NO.	PART NUMBER	DESCRIPTION	QTY.
11	GA5012461	NUT M12 NYLOC ZP	4
12	GA5000577	WASHER 12MM FLAT SS HD	4
13	GA5011251	U BOLT SQUARE TOP M12 X 52MM X 80MM	2
14	GA5006226	BOOM STOPPER, RUBBER, 210MM BUMPER, SUITS 50 X 50MM RHS	1
15	GA5052600	BOLT M8 X 75 SS A2-70	2
16	GA5003643	WASHER 8MM FLAT SS HD	4
17	GA4603651	BOOM SUPPORT BRACKET, 48M, OUTER WING, MY21	1
18	GA4409765	PLATE, CLAMP, BOOM SUPPORT BRACKET, 48M, OUTER WING, MY21	1
19	GA5006161	BOLT M10 X 25 GR8.8 ZP	2
20	GA5000117	WASHER 10MM FLAT SS HD	2

48m - 3D Breakaway - End Protector

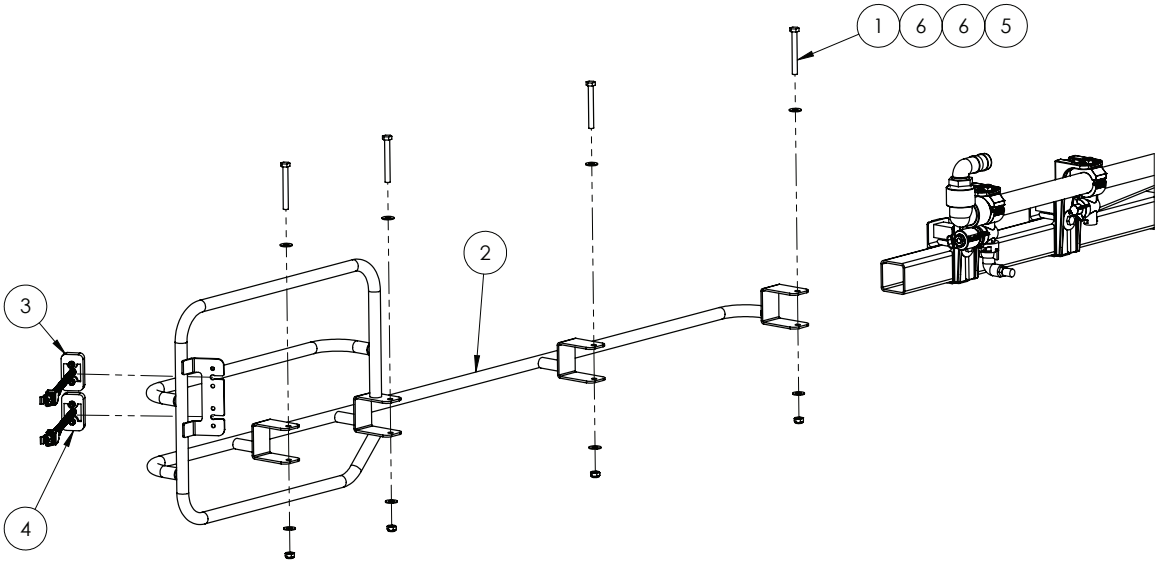

Quantities shown are per side.

ITEM NO.	PART NUMBER	DESCRIPTION	QTY.
1	GA5004737	BOLT M8 X 70 SS A2-70	4
2	GA4601260	BOOM END PROTECTOR, LH, SLIM	1
3	GA5060057	CLEARANCE LIGHT WITH CONNECTOR, ORANGE LED, SUIT FENCE LINE JET	1
4	GA5060056	CLEARANCE LIGHT WITH CONNECTOR, RED LED, SUIT FENCE LINE JET	1
5	GA5052590	NUT M8 NYLOC SS`	4
6	GA5003643	WASHER 8mm FLAT SS HD	8

Chapter 15

ELECTRICS

Fuse boxes & Relays

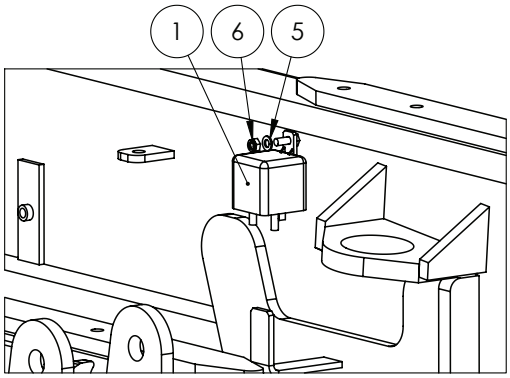

LOCATED ON INNER RIGHT SIDE CHASSIS RAIL - FRONT AXLE AREA

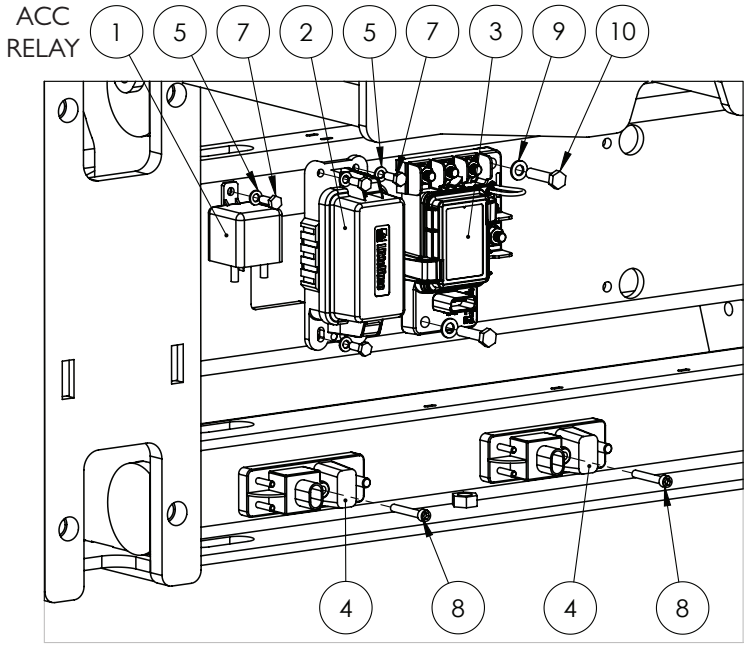

LOCATED IN FRONT AXLE AREA

ITEM NO.	PART NUMBER	DESCRIPTION	QTY.
1	GA5048640	RELAY 12V 180 AMP	2
2	GA3000287	CHASSIS FUSE BLOCK - MINI FUSE, 60 TERMINAL, IP68	1
3	GA3000288	CHASSIS PDM - FUSE BOX, PDM, 3 MIDI, 4 BLADE FUSE	1
4	GA3000331	POWER RELAY MODULE, FUSED, PDM	2
5	GA5004437	WASHER 6MM FLAT SS	6
6	GA5048115	NUT M6 NYLOC ZP	1
7	GA5004041	BOLT M6 X 16 GR8.8 ZP	5
8	GA5011411	SHCS M6 X 40 GR12.9 ZP	2
9	GA5003651	WASHER 8MM FLAT SS	2
10	GA5011481	BOLT M8 X 35 GR8.8 ZP	2

Fuse box, Chassis

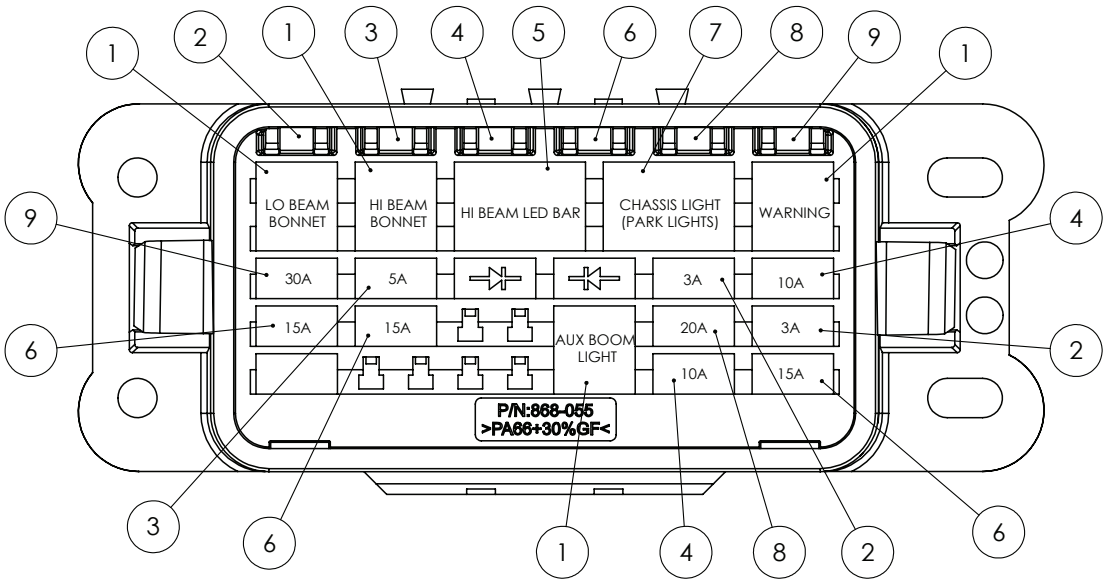

ITEM NO.	PART NUMBER	DESCRIPTION	QTY.
1	GA5075035	RELAY, ULTRA MICRO ISO280, 4 PIN SQUARE, SPST, 12V 20A	1
2	GA3000395	FUSE, MINI BLADE, 3 AMP, (52703)	1
3	GA3000396	FUSE, MINI BLADE, 5 AMP, (52705)	1
4	GA5052510	FUSE MINI BLADE 10 AMP (52710)	1
5	GA5075030	RELAY, ULTRA MICRO ISO280, 5 PIN, SPST, 12V 20A	1
6	GA5052515	FUSE MINI BLADE 15 AMP (52715)	1
7	GA5075030	RELAY, ULTRA MICRO ISO280, 5 PIN, SPST, 12V 20A	1
8	GA5052520	FUSE MINI BLADE 20 AMP (52720)	1
9	GA5054865	FUSE MINI BLADE 30 AMP (52730)	1

Batteries

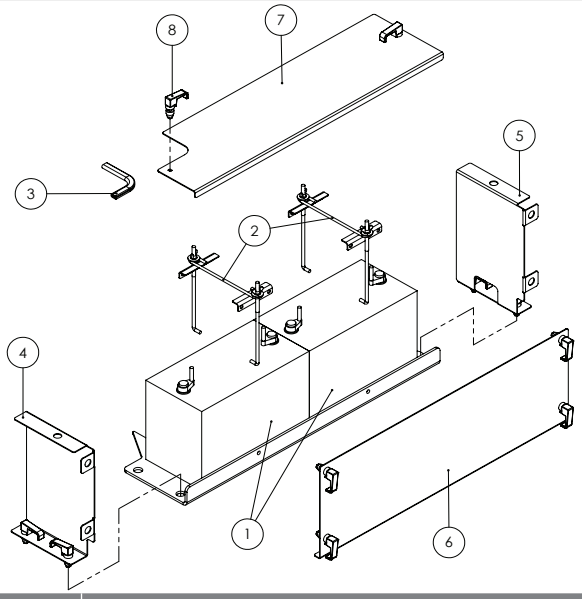

ITEM NO.	PART NUMBER	DESCRIPTION	QTY.
1	GA5066240	BATTERY, DELKOR 31-900, 900 CCA, SUIT SP	2
2	GA5078572	BATTERY HOLD DOWN CLAMP KIT, PROJECTA	2
3	GA5012985	PINCHWELD, BLACK PLAIN 8MM WIDE X 14MM, CUT TO 140MM	1
4	GA4411580	PLATE, BATTERY COVER FRONT, S2 G6	1
5	GA4411585	PLATE, BATTERY COVER REAR, S2 G6	1
6	GA4411590	PLATE, BATTERY COVER SIDE, S2 G6	1
7	GA4411595	PLATE, BATTERY COVER TOP, S2 G6	1
8	GA5066600	RAWL ACTION LATCH, QUICK ACCESS FASTENER, SWELL, BLACK	10

Isolator

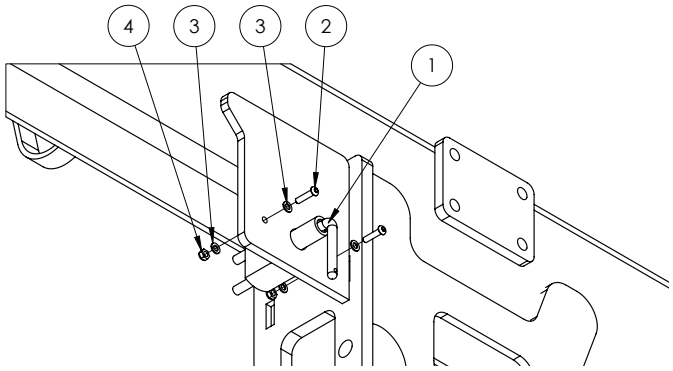

ITEM NO.	PART NUMBER	DESCRIPTION	QTY.
1	GA5005787	BATTERY ISOLATOR SWITCH, LARGE WITH REMOVABLE KEY	1
	GA5005788	BATTERY ISOLATOR REPLACEMENT KEY, SUIT GA5005787 (2010-2016 VER.)	-
2	GA5004067	BHCS M6 X 25 SS A2-70	2
3	GA5004437	WASHER 6MM FLAT SS	4
4	GA5048115	NUT M6 NYLOC ZP	2

Lighting - Headlight & Indicator

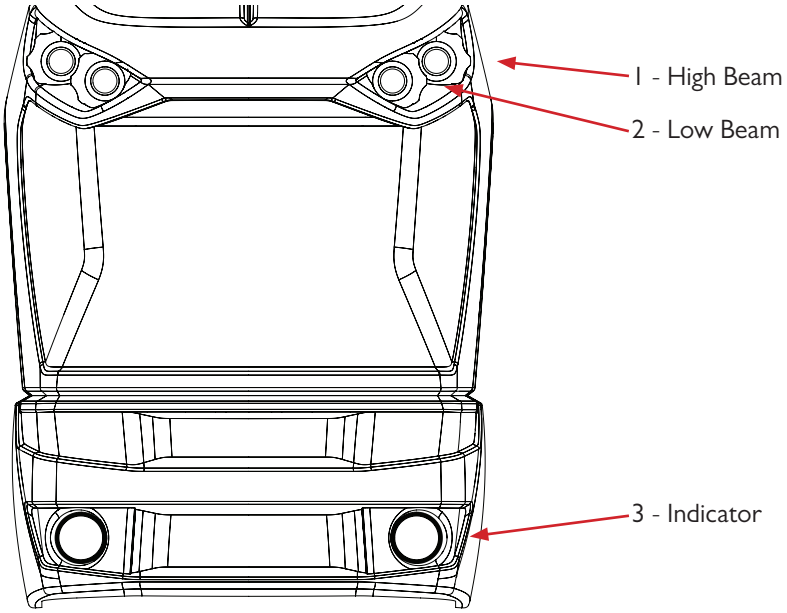

ITEM NO.	PART NUMBER	DESCRIPTION	QTY.
-	GA3000082	HB3 12V 60W GLOBE - HIGH AND LOW BEAM	-
1	GA5075410	HEADLIGHT ASSEMBLY, HIGH BEAM, 12V, 60W, PROJECTOR	-
2	GA5075405	HEADLIGHT ASSEMBLY, LOW BEAM, 12V, 60W, PROJECTOR	-
3	GA5075415	INDICATOR / RUNNING LIGHT ASSEMBLY, LED	-

Lighting - Bonnet LED Light Bar - Optional

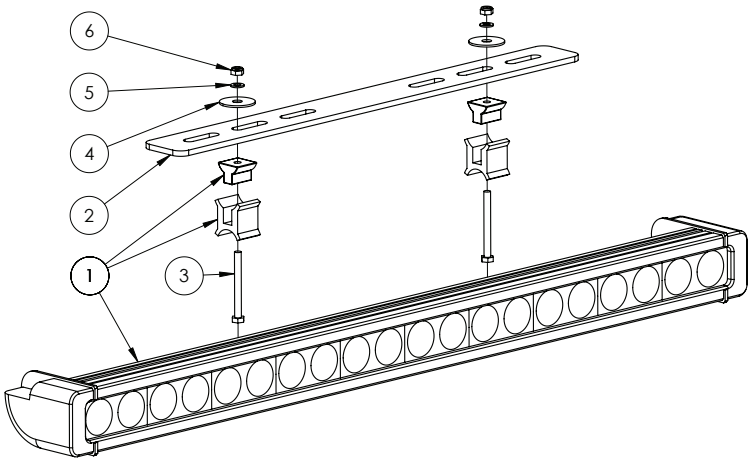

ITEM NO.	PART NUMBER	DESCRIPTION	QTY.
1	GA5075510	LIGHT, LED, BAR, SPOT & FLOOD BEAM, 180W - INCLUDES CONNECTOR	1
2	GA4506725	PLATE, LIGHT BAR MOUNT, LOWER BONNET	1
3	GA5004097	BOLT M6 X 60 GR8.8 ZP	2
4	GA5017645	WASHER 1/4" ID X 1 1/4" OD X 16G SS	2
5	GA5004437	WASHER 6MM FLAT SS	2
6	GA5048115	NUT M6 NYLOC ZP	2

LED Light Bar & Front Work Light Mounting

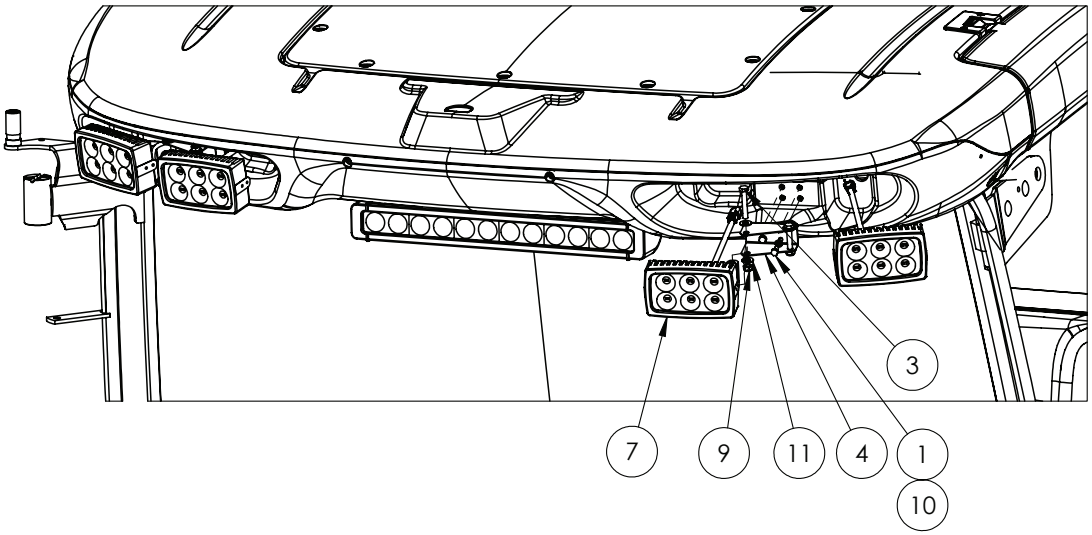

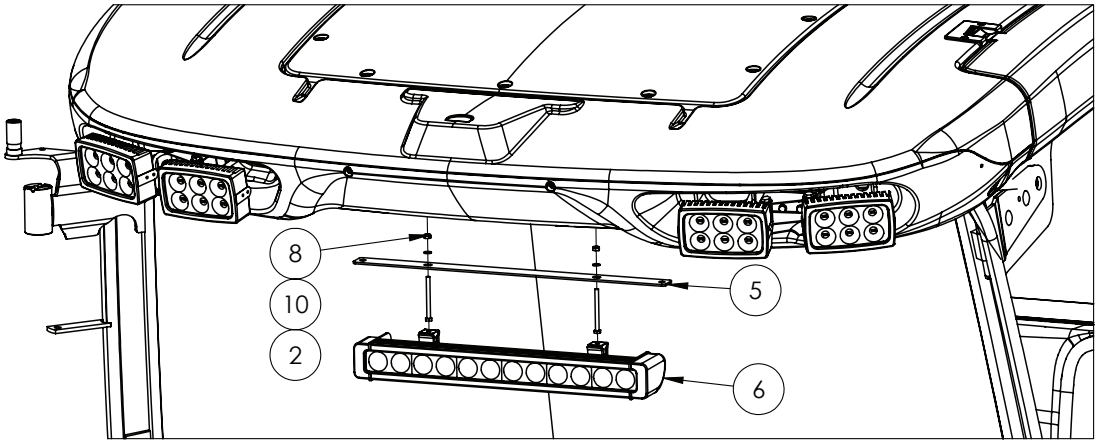

8ITEM NO.	PART NUMBER	DESCRIPTION	QTY.
1	GA5004041	BOLT M6 X 16 GR8.8 ZP	4
2	GA5004107	BOLT M6 X 70 GR8.8 ZP	2
3	GA5004727	BOLT M8 X 50 GR8.8 ZP	2
4	GA4404375	BRACKET, LIGHT MOUNT, CLAAS CABIN	1
5	GA4000188	LED LIGHT BAR MOUNT PLATE SUIT CLAAS ROOF X10	1
6	GA5075505	LIGHT, LED, BAR, 21.5 INCH 20 LED SLIM, LEDST3K- 20L, STEDI	1
7	GA3000250	LIGHT, LED, WORK, CABIN, 30 WATT	2
8	GA5048115	NUT M6 NYLOC ZP	2
9	GA5004917	NUT M8 NYLOC ZP	2
10	GA5004437	WASHER 6mm FLAT SS	10
11	GA5003643	WASHER 8mm FLAT SS HD	4

Lighting - Cab Lights Rear

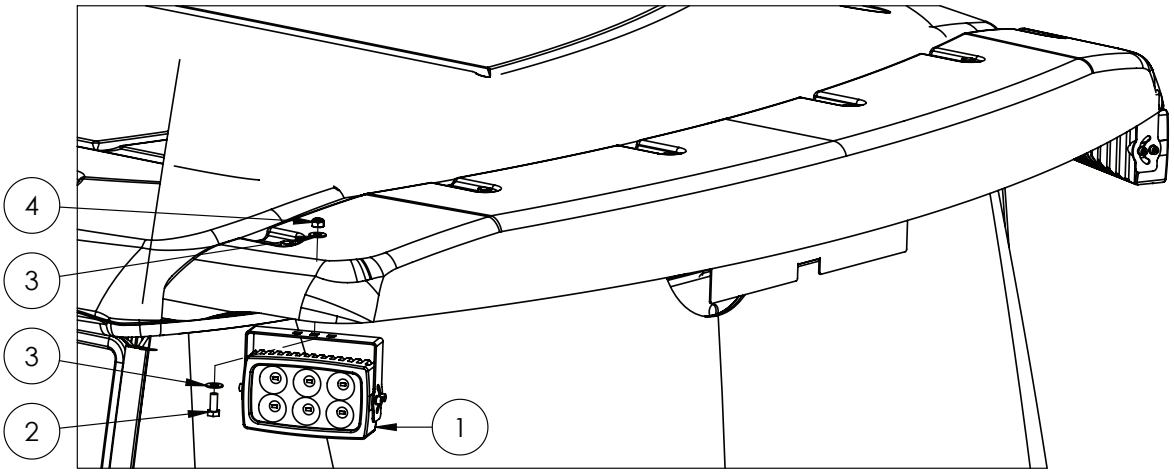

ITEM NO.	PART NUMBER	DESCRIPTION	QTY.
-	GA5052825	WEDGE LOCK, 2 WAY, SOCKETS, DT SERIES	1
-	GA5052830	RECEPTACLE, 2 WAY, PINS, DT SERIES	1
-	GA5061240	PIN, MALE, SOLID, NICKEL, NUMBER 16, GREEN BAND, AWG 14, DEUTSCH	2
1	GA3000250	LIGHT, LED, WORK, CABIN, 30 WATT, WITH CONNECTOR, BRACKETS & MOUNTING HARDWARE	1
2	GA5004085	BOLT M8 X 20 GR8.8 ZP	1
3	GA5003643	WASHER 8MM FLAT SS HD	2
4	GA5004917	NUT M8 NYLOC ZP	1

Lighting - Beacon Lights

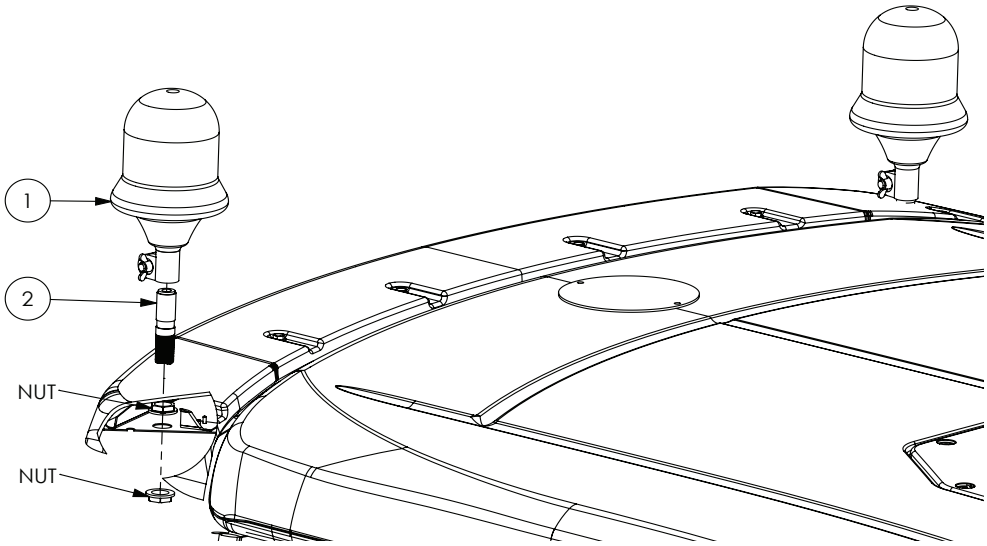

ITEM NO.	PART NUMBER	DESCRIPTION	QTY.
1	GA5048975	BEACON, ROTATING, AMBER, DIN A POLE MOUNT, H1 GLOBE INCLUDED	2
	GA5012093	GLOBE, BEACON, H1 12V 55W, NARVA	-
2	GA5020411	BEACON INSERT SCREW IN	2

Lighting - Tail Lights

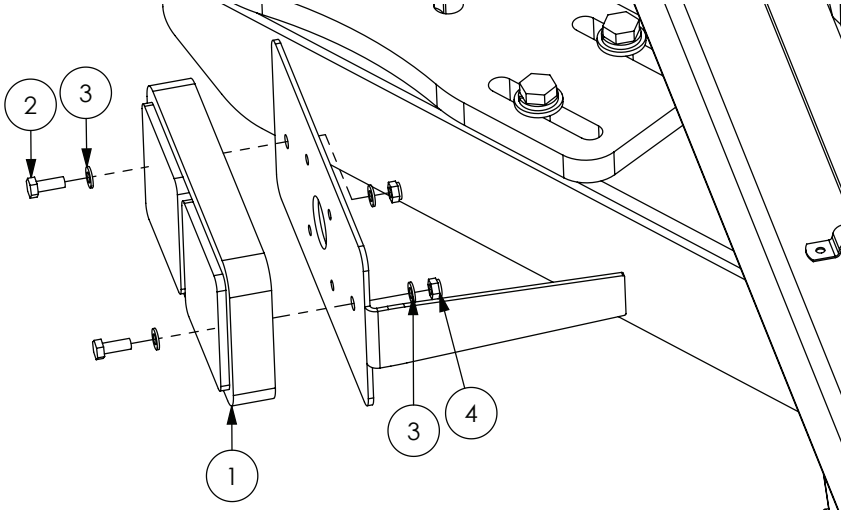

ITEM NO.	PART NUMBER	DESCRIPTION	QTY.
1	GA5018786	LAMP, LED, 12V, BRAKE / TAIL LIGHT / INDICATOR, 190 X 100MM	2
2	GA5011395	BOLT M6 X 16 SS A2-70	4
3	GA5004437	WASHER 6MM FLAT SS	8
4	GA5048115	NUT M6 NYLOC ZP	4

Lighting - Service Lights

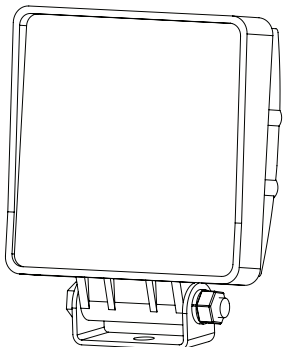

PART NUMBER	DESCRIPTION	QTY.
GA5075500	LIGHT, LED, WORK, FLOOD BEAM, BARE WIRES, 12V, 24W	1
GA5007381	CONNECTOR, 2 PIN, FEMALE, WEATHER PACK	1
GA5016617	PIN, MALE, SEALED, WEATHER PACK, WIRE 1.0 - 2.0MM	2
GA5014857	SEAL, GREEN, WEATHER PACK CONNECTOR, WIRE FROM 2.03 - 2.85MM	2
GA5006113	BOLT M10 X 20 GR8.8 ZP	1
GA5003643	WASHER 8MM FLAT SS HD	2
GA5004917	NUT M8 NYLOC ZP	1
GA5003039	ELECTRICAL WIRE, 3MM, TWIN CORE, DOUBLE INSULATED, BLACK OUTER , RED & BLACK INNER	-
GA5012161	SPLIT TUBING, 7MM	-

Quantities shown are per work light.

Lighting - Tool Box

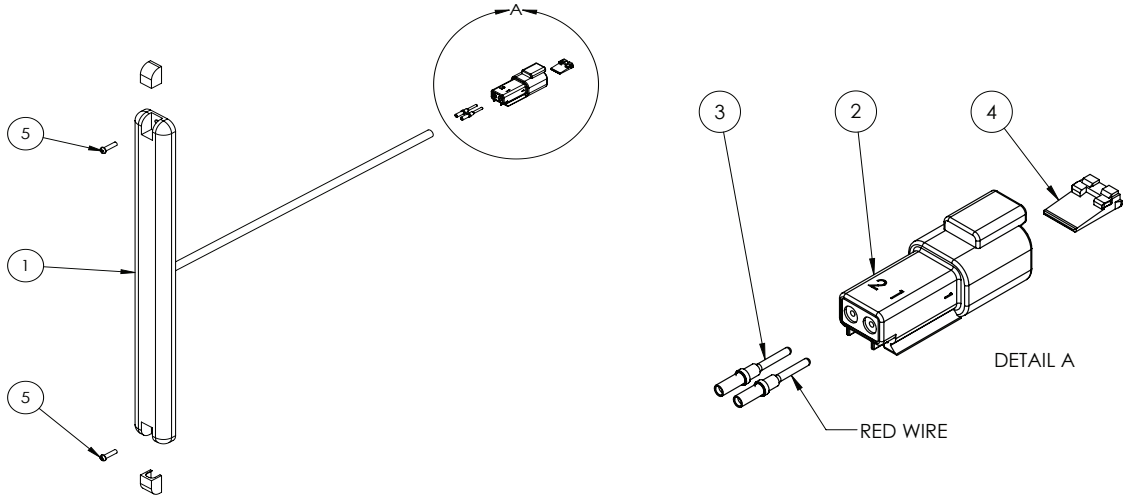

ITEM NO.	PART NUMBER	DESCRIPTION	QTY.
1	GA3000335	LIGHT, LED STRIP LIGHT, ALUMINIUM, 306MM	1
2	GA5052830	RECEPTACLE, 2 WAY, PINS, DT SERIES, DEUTSCH	1
3	GA5061240	PIN, MALE, SOLID, NICKEL, NUMBER 16, GREEN BAND, AWG 14, DEUTSCH	2
4	GA5052835	WEDGE LOCK, 2 WAY, DT SERIES, DEUTSCH	1
5	GA5003083	BOLT PAN HEAD M3 X 12 MM	2

Lighting - Breakaway Tip 36-42m

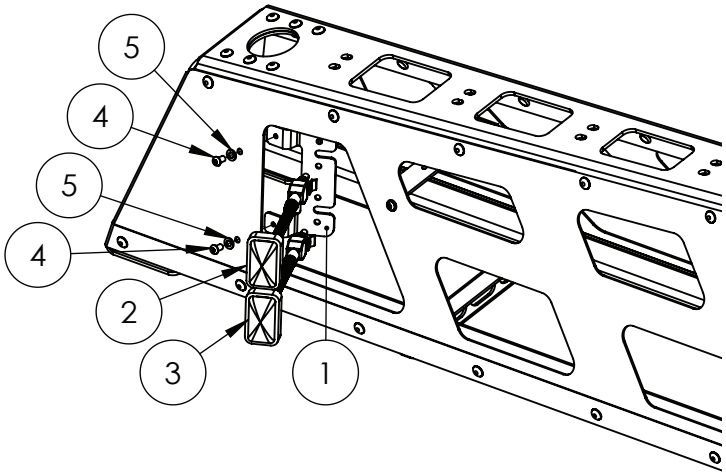

ITEM NO.	PART NUMBER	DESCRIPTION	QTY.
1	GA4405610	PLATE, ALUMINIUM BREAKAWAY TIP, LED MOUNT	1
2	GA5060057	CLEARANCE LIGHT WITH CONNECTOR, ORANGE LED, AMP PLUG	1
-	GA3000267	LIGHT, LED, ORANGE, CLEARANCE, DEUTSCH CONNECTOR	1
3	GA5060056	CLEARANCE LIGHT WITH CONNECTOR, RED LED, AMP PLUG	1
-	GA3000266	LIGHT, LED, RED, FENCE, DEUTSCH CONNECTOR	1
4	GA5004023	BHCS M6 X 10 SS A2-70	2
5	GA5004437	WASHER 6MM FLAT SS	2

Reverse Warning Beeper

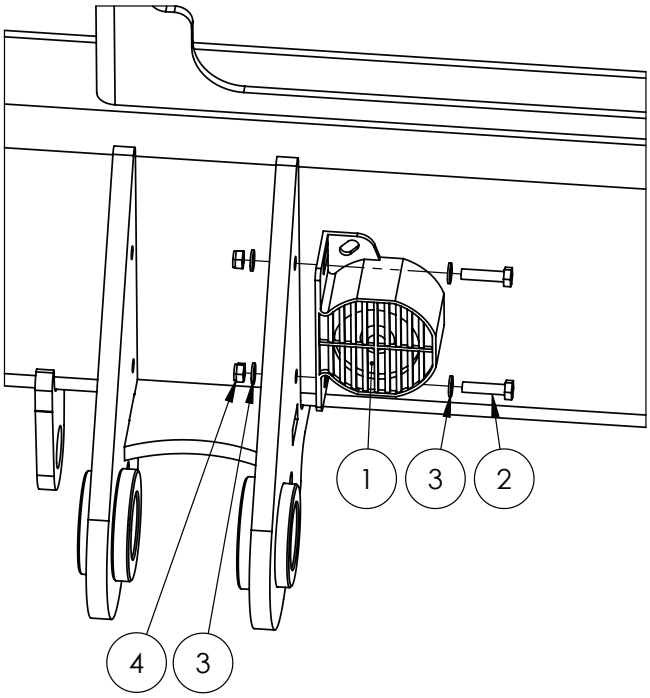

ITEM NO.	PART NUMBER	DESCRIPTION	QTY.
1	GA5011985	REVERSE BEEPER, 12V 102DB ALARM	1
2	GA5004073	BOLT M6 X 25 GR8.8 ZP	2
3	GA5004437	WASHER 6MM FLAT SS	4
4	GA5048115	NUT M6 NYLOC ZP	2

Horn

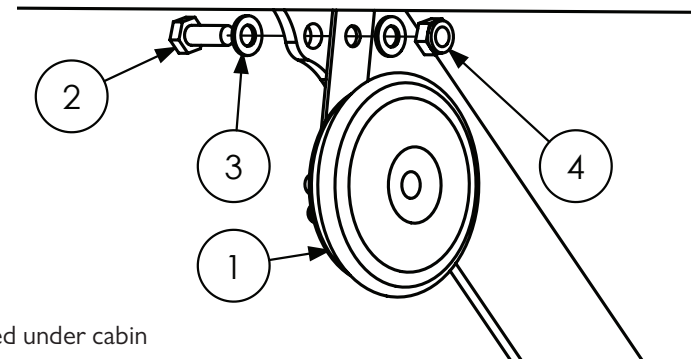

NOTE: Horn is located under cabin

ITEM NO.	PART NUMBER	DESCRIPTION	QTY.
1	GA5011983	12 VOLT, DISC HORN, HIGH TONE	1
2	GA5004085	BOLT M8 X 20 ZP GR8.8	1
3	GA5003643	WASHER 8MM FLAT SS HD	2
4	GA5052590	NUT M8 NYLOC SS	1

Cabin - Fuse Boxes

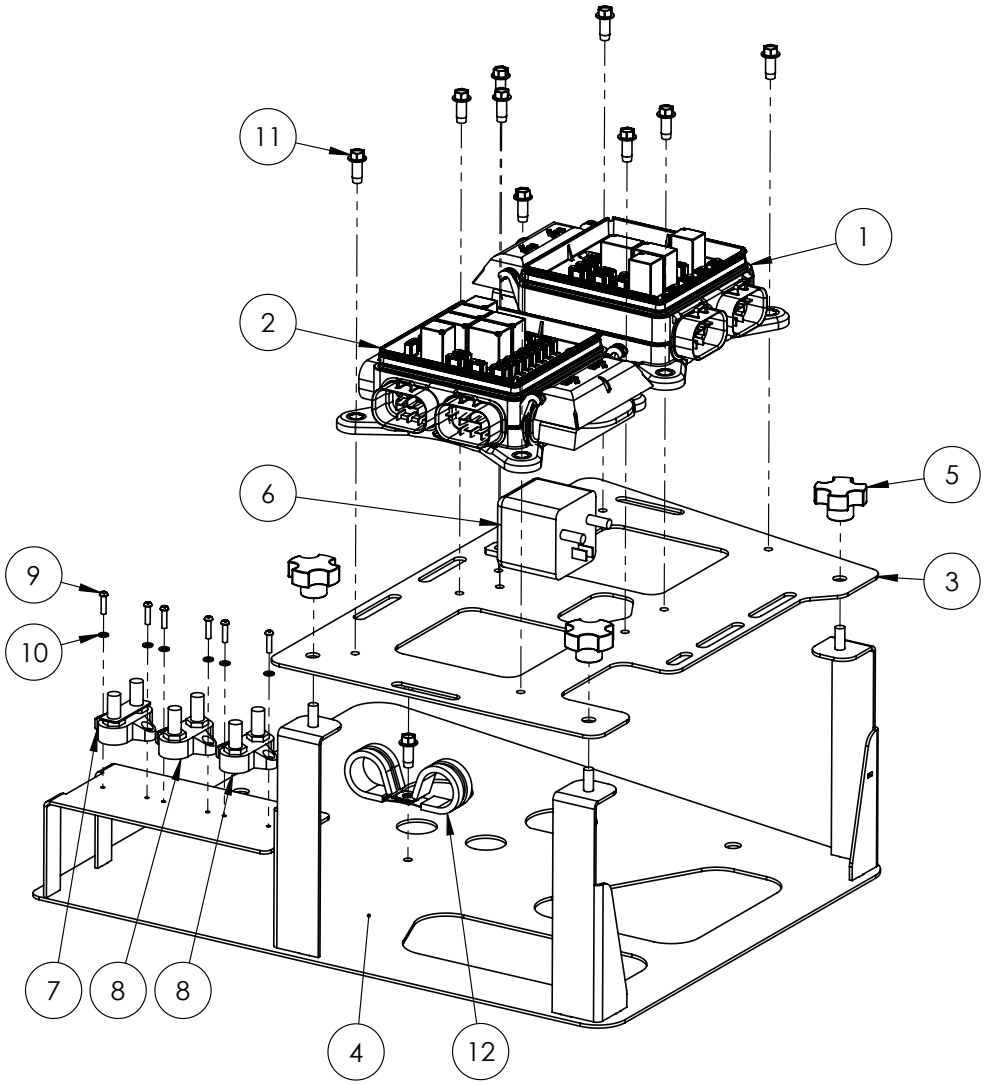

ITEM NO.	PART NUMBER	DESCRIPTION	QTY.
1	GA4949490	FUSE BLOCK, CABIN MAIN #1 - INCLUDES LID	1
2	GA4949495	FUSE BLOCK, CABIN MAIN #2 - INCLUDES LID	1
3	GA4406020	PLATE, TOP, FUSE BOX MOUNT, CLAAS CABIN	1
4	GA4602445	ELECTRICAL COMPARTMENT, FUSE BOX, BASE, CLAAS	1
5	GA5069870	KNOB-STAR GRIP M6 X 32 DIAMETER	3
6	GA5048640	RELAY, 12V, 180 AMP PEAK, 100 AMP CONTINUOUS, 4 PIN, NORMALLY OPEN	1
7	GA3000320	CONNECTOR, POWER STUD, BLACK, DUAL 8MM TERMINALS	1
8	GA3000319	CONNECTOR, POWER STUD, RED, DUAL 8MM TERMINALS	2
9	GA5003083	BOLT PAN HEAD M3 X 12	6
10	GA5011351	WASHER 3MM FLAT SS	6
11	GA0500022	SET SCREW SELF TAPPING TRILOBE M6 X 16 ZP	10
12	GA5049830	CLAMP P-TYPE 27 MM	2

Cabin - Fuse Box Assembly #1

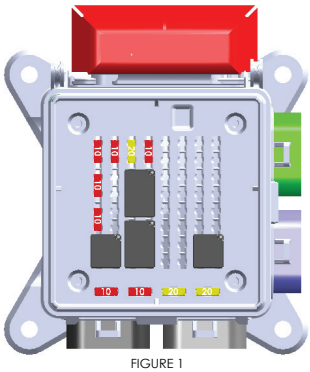

FIGURE 1

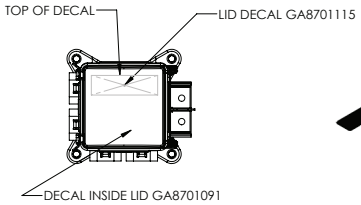

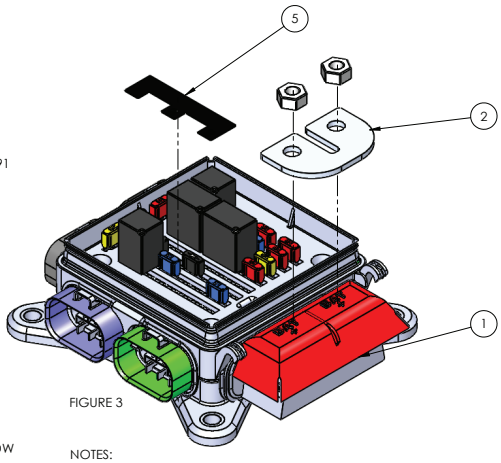

FIGURE 3

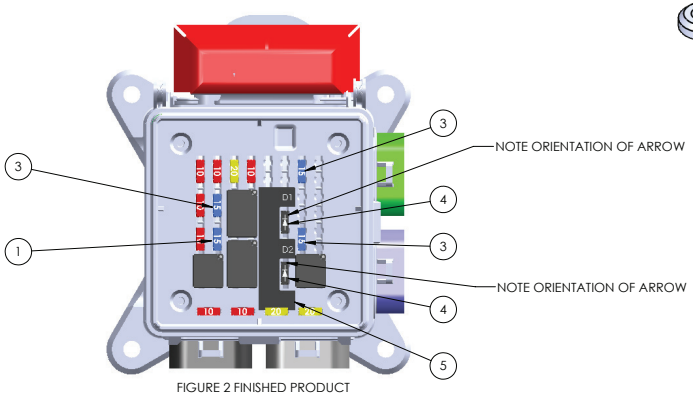

FIGURE 2 FINISHED PRODUCT

NOTES:

1. REMOVE FUSES AS SHOWN IN FIGURE 1
2. INSTALL NEW FUSES AS SHOWN IN FIGURE 2
3. INSTALL POWER LINK AS SHOWN IN FIGURE 3
4. ENSURE LID IS SUPPLIED WITH FUSE BLOCK

ITEM NO.	PART NUMBER	DESCRIPTION	QTY.
1	GA3000318	FUSE BOX, CABIN MAIN, SUIT FUSE CONFIG GA4949490	1
2	GA4524960	PLATE, BUSSMAN FUSEBOX POWER LINK	1
3	GA5054850	MINI BLADE FUSES 15 AMP	4
4	GA3000424	DIODE, 1 AMP 400V, MINI BLADE	2
5	GA8701092	DECAL, FUSE BLOCK #2 DIODE INSERT	1

Cabin - Fuse Box Assembly #2

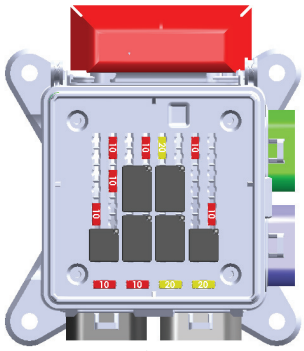

FIGURE 1

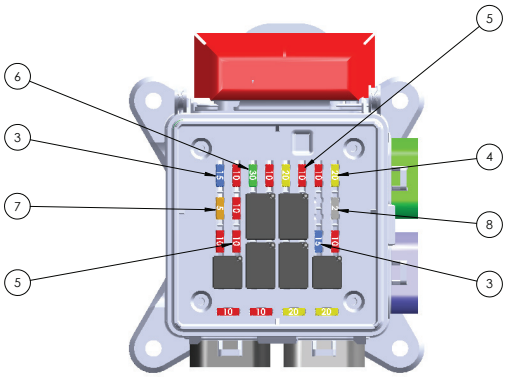

FIGURE 2 FINISHED PRODUCT

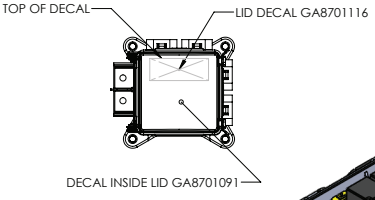

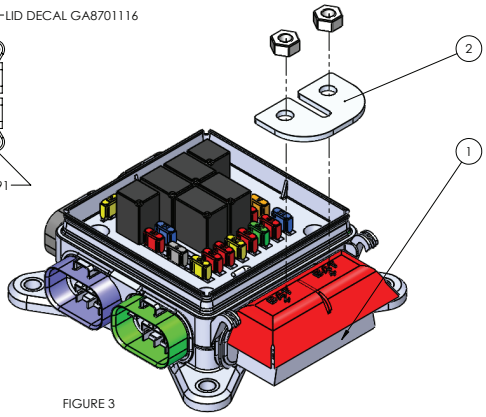

FIGURE 3

NOTES:

1. REMOVE FUSES AS SHOWN IN FIGURE 1
2. INSTALL NEW FUSES AS SHOWN IN FIGURE 2
3. INSTALL POWER LINK AS SHOWN IN FIGURE 3
4. ENSURE LID IS SUPPLIED WITH FUSE BLOCK

ITEM NO.	PART NUMBER	DESCRIPTION	QTY.
1	GA3000318	FUSE BOX, CABIN MAIN, SUIT FUSE CONFIG GA4949495	1
2	GA4524960	PLATE, BUSSMAN FUSEBOX POWER LINK	1
3	GA5054850	MINI BLADE FUSES 15 AMP	2
4	GA5054855	MINI BLADE FUSES 20 AMP	1
5	GA5054845	MINI BLADE FUSES 10 AMP	2
6	GA5054865	MINI BLADE FUSES 30 AMP	1
7	GA3000396	MINI BLADE FUSES 5 AMP	1
8	GA3000425	MINI BLADE FUSES 2 AMP	1

External Controller Screen & Keypad

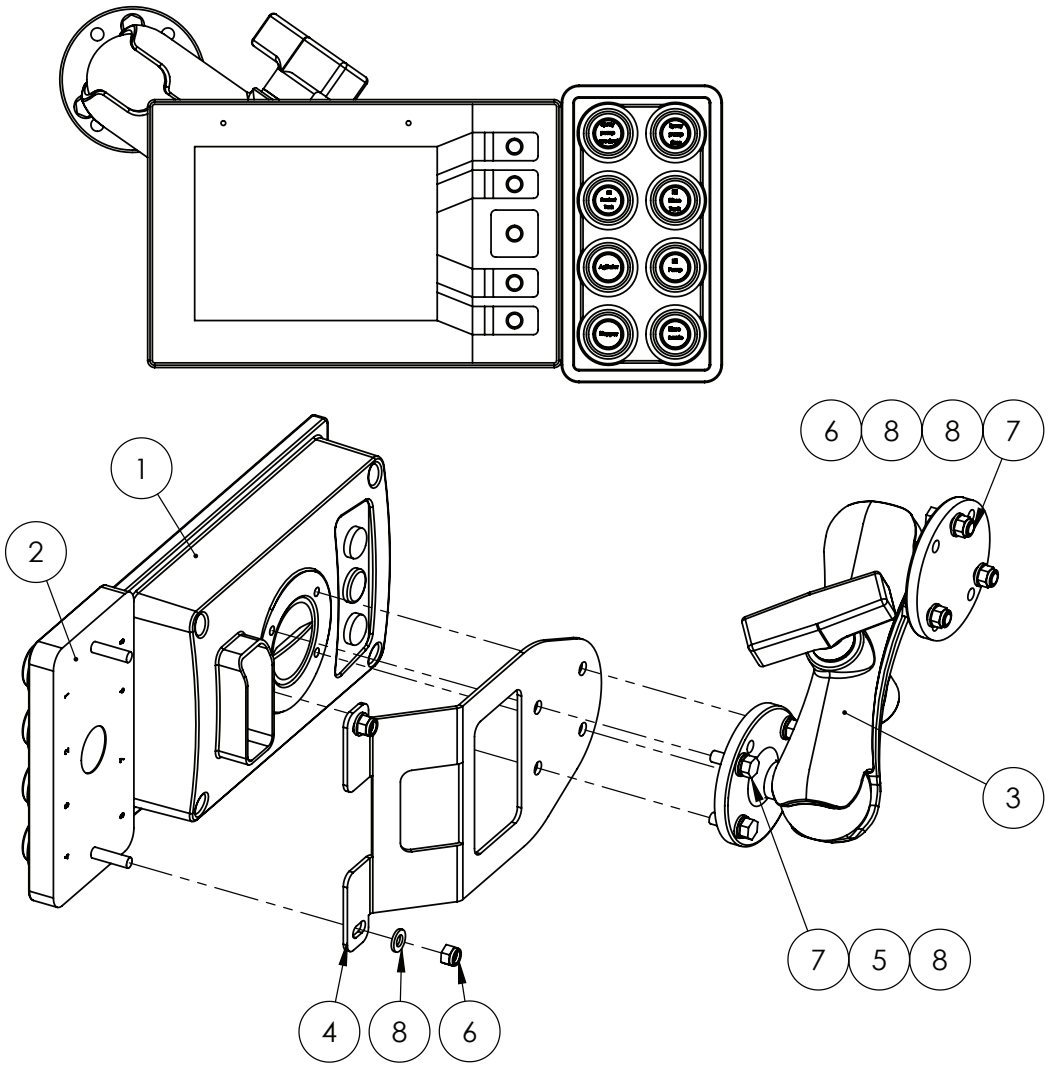

NOTE:
DO NOT OVERTIGHTEN NUT ITEM 8
BOLTS ONLY GLUED INTO THE KEYPAD ITEM 2

ITEM NO.	PART NUMBER	DESCRIPTION	QTY.
1	GA3000289	DISPLAY SCREEN, 5”, NON TOUCH, IFM CR1058	1
2	GA4950010	CAN KEYPAD ASSEMBLY	1
3	GA5020825	RAM MOUNT, UNIVERSAL, ADJUSTABLE, C SIZE 1.5” BALL, 7.35”, WITH ROUND MOUNTS	1
4	GA4525100	MOUNTING PLATE SUIT CAN KEYPAD	1
5	GA5003629	WASHER 5MM SPRING SS	4
6	GA5003974	NUT M5 NYLOC ZP	5
7	GA5003577	BOLT M5 X 16 GR8.8 ZP	7
8	GA5003983	WASHER 5MM FLAT SS	12

External Controller Keypad

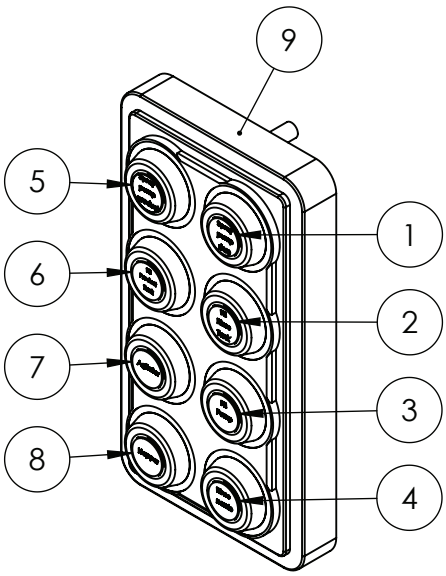

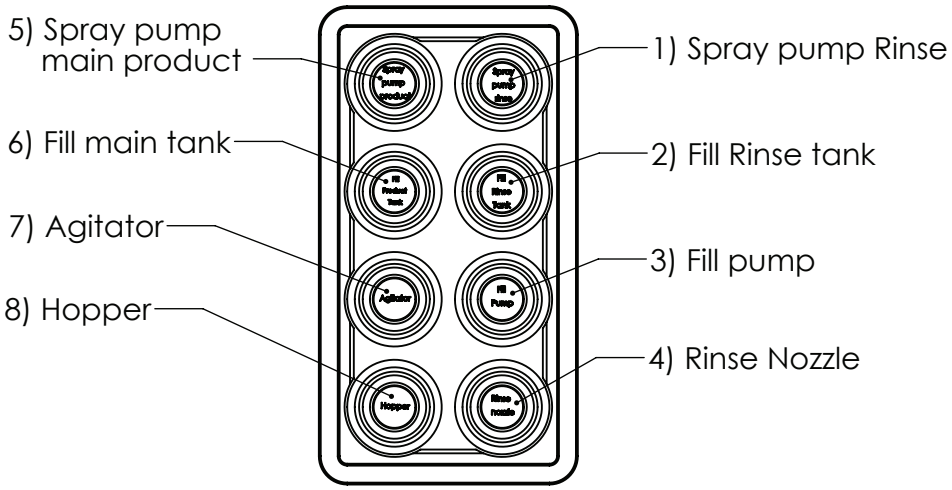

ITEM NO.	PART NUMBER	DESCRIPTION	QTY.
1	GA3000436	KEYPAD SWITCH INSERT, SPRAY PUMP RINSE, LASER ETCHED	1
2	GA3000437	KEYPAD SWITCH INSERT, FILL RINSE TANK, LASER ETCHED	1
3	GA3000438	KEYPAD SWITCH INSERT, FILL PUMP, LASER ETCHED	1
4	GA3000439	KEYPAD SWITCH INSERT, RINSE NOZZLE, LASER ETCHED	1
5	GA3000440	KEYPAD SWITCH INSERT, SPRAY PUMP PRODUCT, LASER ETCHED	1
6	GA3000441	KEYPAD SWITCH INSERT, FILL PRODUCT TANK, LASER ETCHED	1
7	GA3000442	KEYPAD SWITCH INSERT, AGITATOR, LASER ETCHED	1
8	GA3000443	KEYPAD SWITCH INSERT, HOPPER, LASER ETCHED	1
9	GA3000431	KEYPAD, CAN, 8 BUTTON CANOPEN, DEUTSCH 4 PIN CONNECTOR, BLANK SWITCHES IFM	1

Electrical Connectors - Raven - RCM & XRT

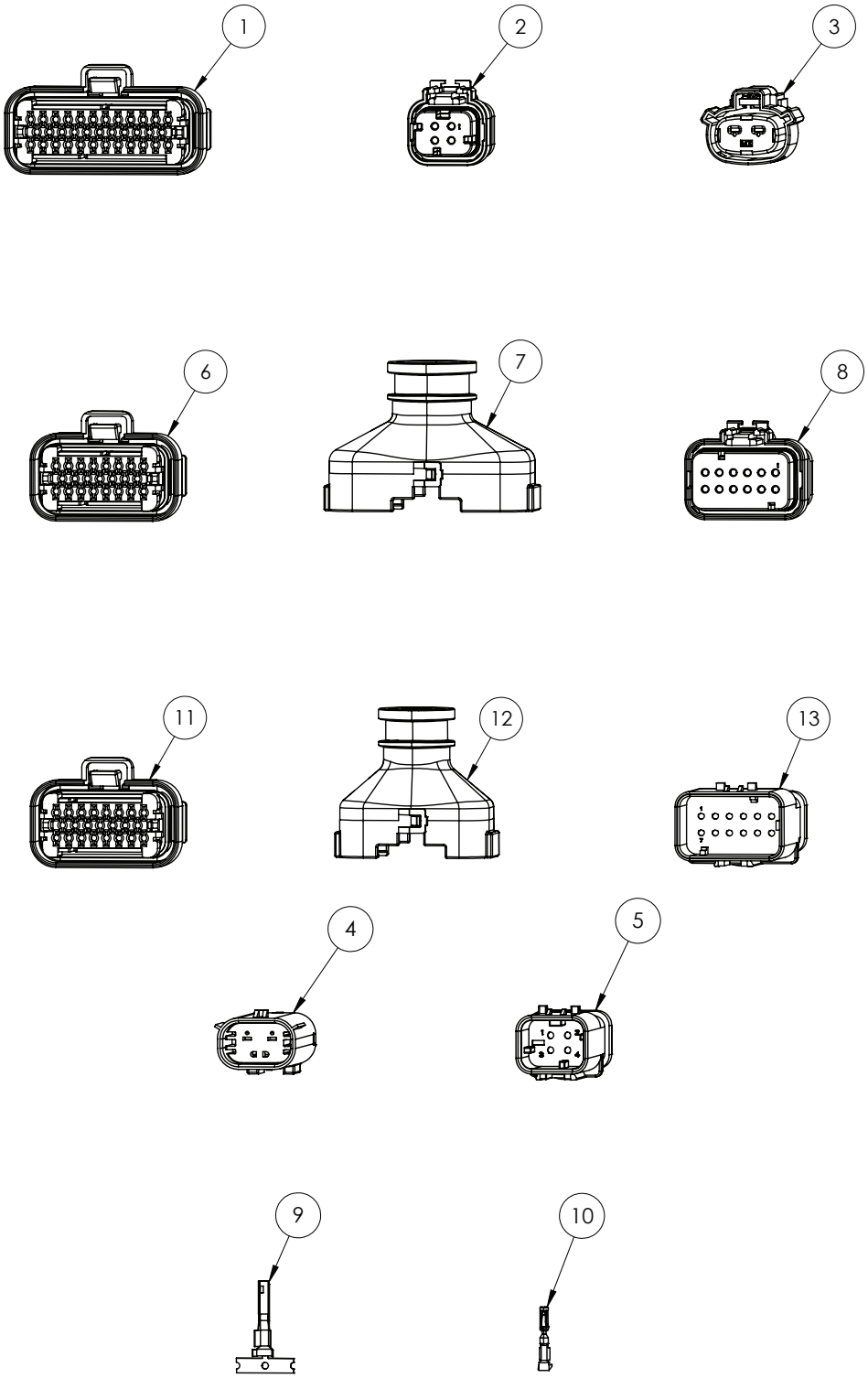

ITEM NO.	PART NUMBER	DESCRIPTION	QTY.
1	GA3001135	ELECTRICAL CONNECTOR, 35 PIN PLUG, BLACK, AMPSEAL, 776164-1	-
2	GA3000839	ELECTRICAL CONNECTOR, 4 SOCKET, RED PLUG, 18-14 AWG, AMPSEAL 16, 776524-1	-

Continue Over Page

Electrical Connectors - Raven - RCM & XRT

ITEM NO.	PART NUMBER	DESCRIPTION	QTY.
3	GA3001141	ELECTRICAL CONNECTOR, 2 PIN RECEPTACLE,MOLEX 19432-0013, SUIT 19434-0003 SOCKETS	-
4	GA3001142	ELECTRICAL CONNECTOR, 2 PIN PLUG, MOLEX 19433-0013, SUIT 19431-0001 PINS	-
5	GA3000840	ELECTRICAL CONNECTOR, 4 PIN, RED INTERNAL RECEPTACLE, 18-14 AWG, AMPSEAL 16, 776488-1	-
6	GA3001136	ELECTRICAL CONNECTOR, 23 PIN PLUG, BLACK, AMPSEAL, 770680-1	-
7	GA3001417	ELECTRICAL CONNECTOR, BACKSHELL, AMPSEAL, 35 POSITION, 2389807-1, 2 PER CONNECTOR	-
8	GA3001140	ELECTRICAL CONNECTOR, 12 PIN PLUG, AMPSEAL 16, SUIT DEUTSCH 16 SOCKETS, 776437-1	-
9	GA3001143	ELECTRICAL TERMINAL CONNECTOR, FEMALE, MX150L, MOLEX, 19434-0003	-
10	GA3001138	ELECTRICAL CONTACT, AMPSEAL GOLD SOCKET, 16-20 AWG, LOOSE PIECE, 770854-3	-
11	GA3001137	ELECTRICAL CONNECTOR, 23 PIN PLUG, GREY, AMPSEAL, 770680-4	-
12	GA3001416	ELECTRICAL CONNECTOR, BACKSHELL, AMPSEAL,23 POSITION, 2389806-1, 2 PER CONNECTOR	-
13	GA3001139	ELECTRICAL CONNECTOR, 12 PIN RECEPTACLE, AMPSEAL 16, SUIT DEUTSCH 16 PINS, 776438-1	-

Electrical Connectors - ISO Bus - Raven & Deutsch

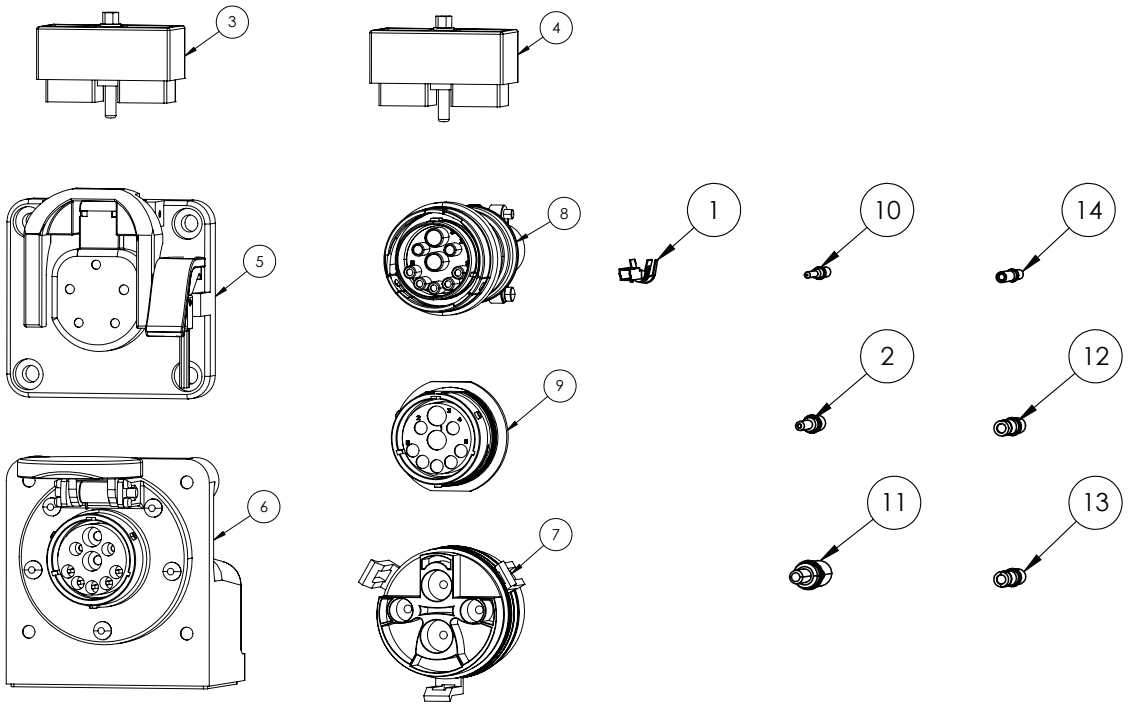

ITEM NO.	PART NUMBER	DESCRIPTION	QTY.
1	GA5061370	CINCH TERMINAL FEMALE 16-18AWG, 425-00-00- 873	-
2	GA5061260	CONNECTOR, DEUTSCH, CONTACT, PIN, SOLID, AWG 12-14, NICKEL	-
3	GA3001152	ELECTRICAL CONNECTOR, CINCH, 30 WAY, A-K, SUIT PC1 ISO NODE, 581-01-30-029	-
4	GA3001153	ELECTRICAL CONNECTOR, CINCH, 30 WAY, L-Y, SUIT PC1 ISO NODE, 581-01-30-028	-
5	GA3000872	ELECTRICAL CONNECTOR, ISO BUS, 11783-2, 9 PIN, BOX, IBBC BREAKAWAY 408-4002-131	-
6	GA3000874	ELECTRICAL CONNECTOR, ISO BUS, 11783-2, 9 PIN, BOX, JD STYLE, IBBC HDBOX-24-91PN	-
7	GA3000873	ELECTRICAL CONNECTOR, ISO BUS, 4P PLUG IBRC SUIT GA3000872, 408-4002-132	-
8	GA3000870	ELECTRICAL CONNECTOR, ISO BUS, 9 PIN, HDB36- 24-91SE-059	-
9	GA3000875	ELECTRICAL CONNECTOR, ISO BUS, 9 PIN, CABLE MOUNT HD34-24-91PN	-
10	GA5061220	PIN, MALE, GOLD, NUMBER 16, DEUTSCH	-
11	GA3000876	PIN, MALE, SOLID, NICKEL, NUMBER 8, DEUTSCH, 0460-204-08141	-
12	GA3000877	SOCKET, FEMALE, SOLID, NICKEL, NUMBER 12, DEUTSCH	-
13	GA3000877	SOCKET, FEMALE, SOLID, NICKEL, NUMBER 8, DEUTSCH, 0462-203-08141	-
14	GA5061225	SOCKET, FEMALE, SOLID GOLD, NUMBER 16, DEUTSCH	-
-	GA5052840	SEALING PLUG, BLANKING PIN, WHITE, SIZE 12 - 16, DEUTSCH	-

Electrical Connectors - AMP

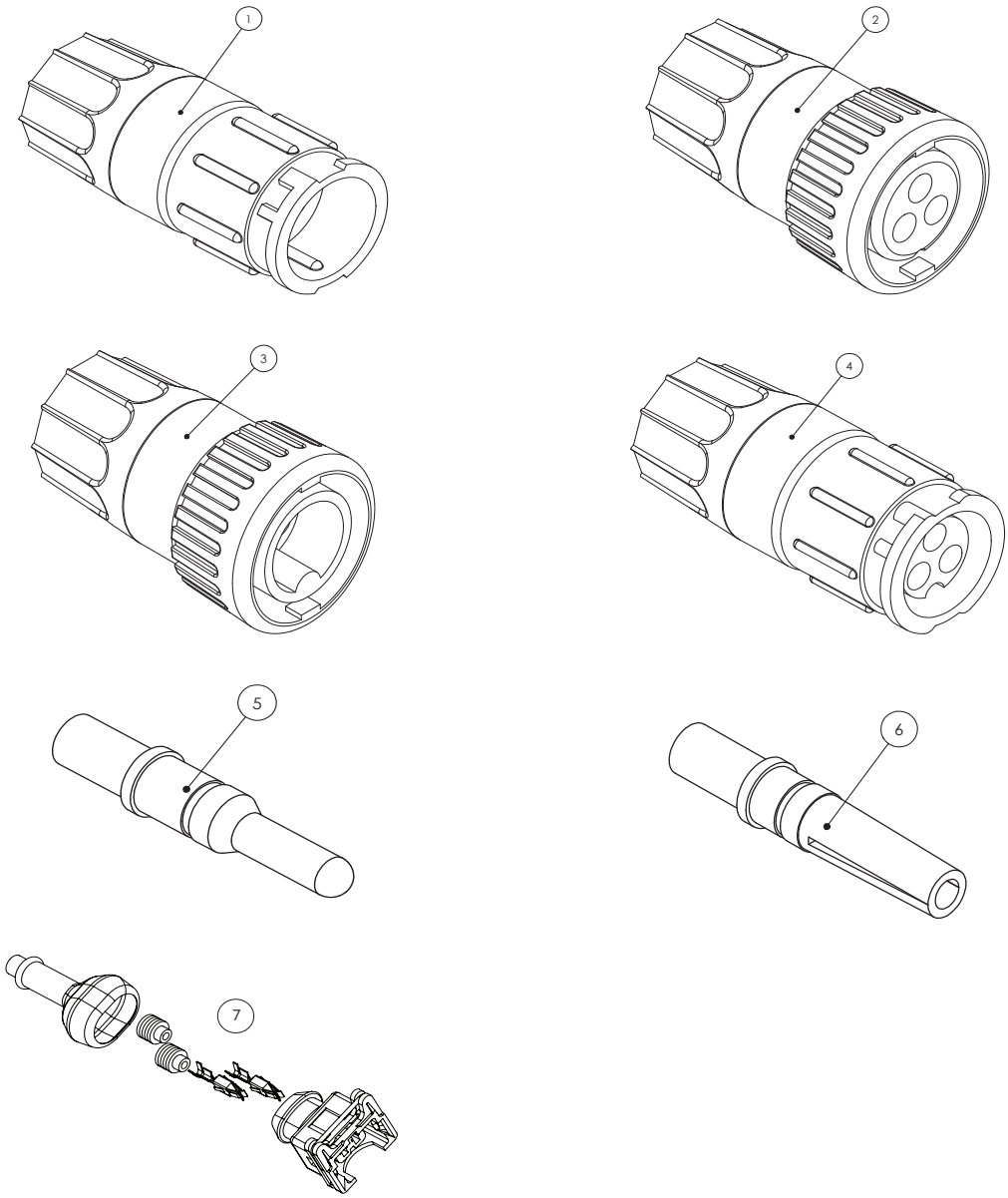

ITEM NO.	PART NUMBER	DESCRIPTION
1	4084001014	CONNECTOR, 3 PIN KIT, FLOW METER, INCLUDING MALE PINS, RAVEN
2	4084001015	CONNECTOR, 3 PIN KIT, FLOW METER, INCLUDING FEMALE PINS, RAVEN
3	4084001010	CONNECTOR, 3 PIN KIT, SPEED SENSOR, INCLUDING MALE PINS, RAVEN
4	4084001016	CONNECTOR, 3 PIN KIT, SPEED SENSOR, INCLUDING FEMALE PINS, RAVEN
5	4084001062	PIN, 16-20 GAUGE, MALE, SUIT SPEED SENSOR - FLOW METER, RAVEN
6	4084001063	PIN, 16-20 GAUGE, FEMALE, SUIT SPEED SENSOR - FLOW METER, RAVEN
7	GA5047728	PLUG, 2 PIN, BLACK, FUEL INJECTOR CONNECTOR, IP65K, AMP
-	GA5068945	CONNECTOR, 3 PIN AMP SUPER SEAL WATERPROOF MALE

Electrical Connectors - AMP

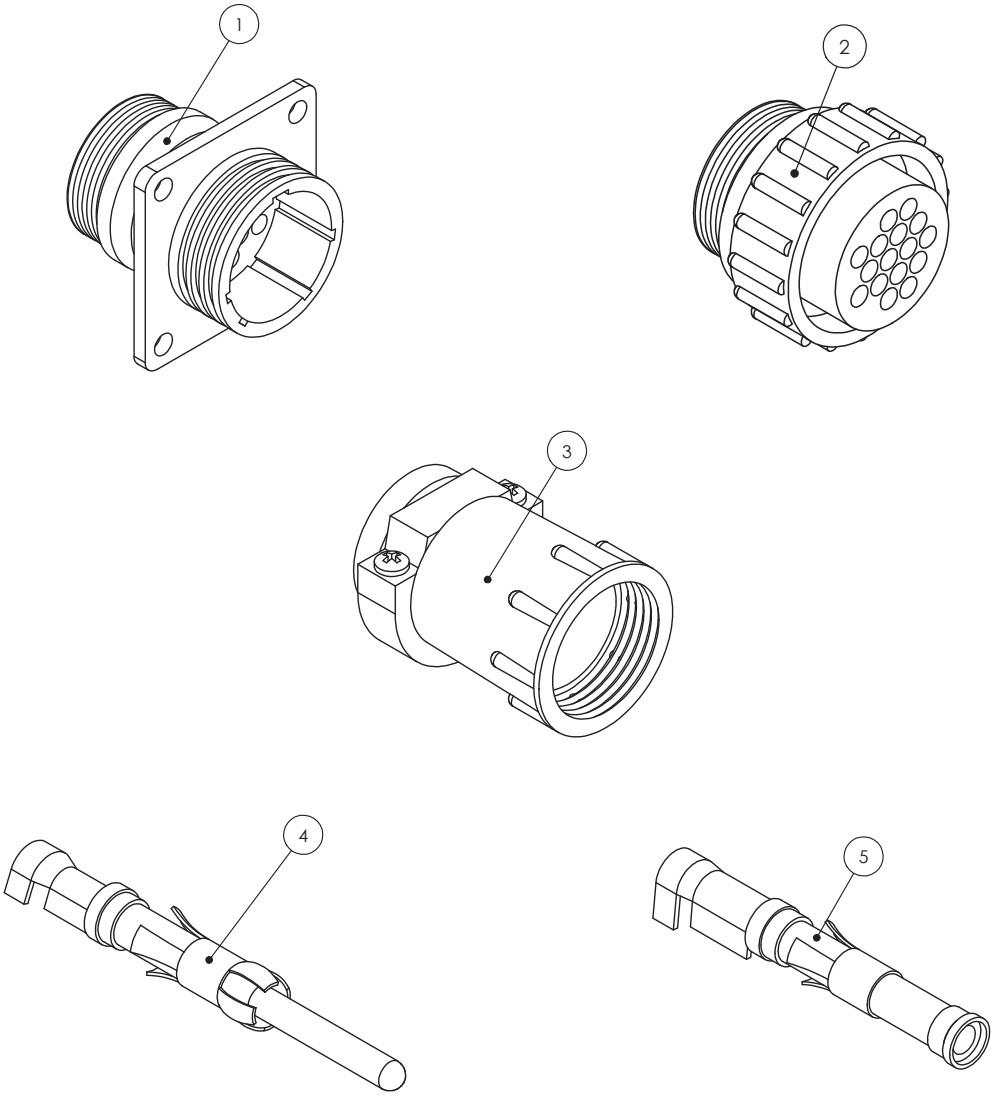

ITEM NO.	PART NUMBER	DESCRIPTION
1	4084001017	CONNECTOR, 16 PIN AMP, SQUARE FLANGE, SUIT MALE PINS, RAVEN
2	4084001018	CONNECTOR, 16 PIN AMP, SUIT FEMALE PINS, RAVEN
3	GA5049175	CONNECTOR, BACKING SHELL, SUIT 16 PIN AMP, RAVEN
4	GA5048905	PIN, 14-18 GAUGE GOLD, MALE, SUIT 16 PIN AMP
5	GA5048900	PIN, 14-18 GAUGE GOLD, FEMALE, SUIT 16 PIN AMP
-	GA5020785	CONNECTOR, 37 PIN AMP, MALE, RAVEN
-	GA5020780	CONNECTOR, 37 PIN AMP, FEMALE
-	GA5020560	CONNECTOR, BACKING SHELL 23, SUIT 37 PIN AMP, STANDARD SIZE
-	GA5020559	CONNECTOR, BACKING SHELL 23, SUIT 37 PIN AMP, LARGE SIZE
-	GA5020561	CONNECTOR DUST CAP, 37 PIN AMP, MALE, RAVEN
-	GA5020575	DUST CAP, 16 PIN AMP CONNECTOR, MALE
-	0630171042-E	DUST CAP, 16 PIN AMP CONNECTOR, FEMALE
-	0630172526-B	DUSTCAP 37 PIN SERIES 23 (4000 SERIES CONNECTOR DUST CAP, 37 PIN AMP, SERIES 23, RAVEN

Electrical Connectors - Deutsch

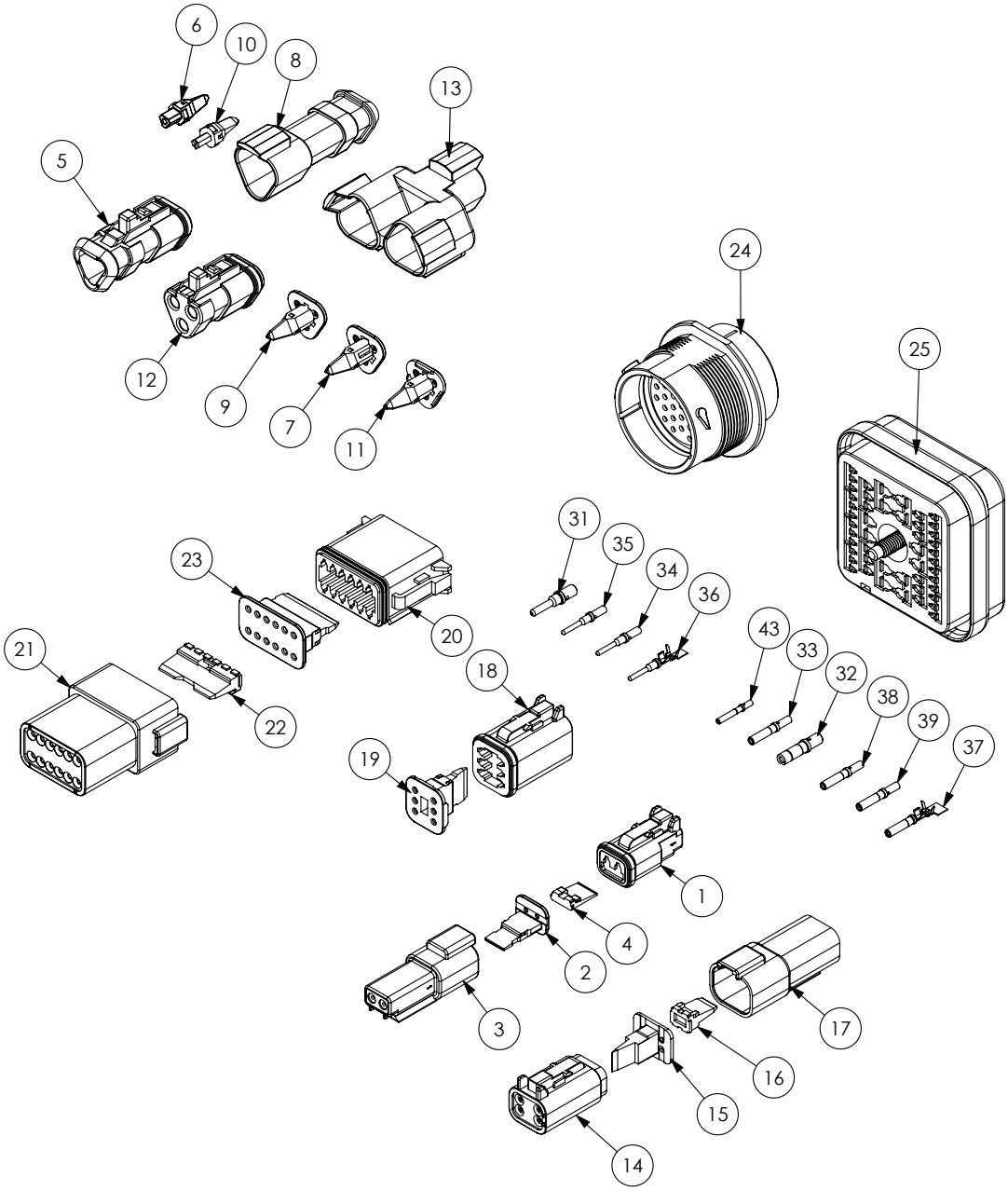

ITEM NO.	PART NUMBER	DESCRIPTION
1	GA5052820	PLUG, 2 WAY, SOCKET, DT SERIES, DEUTSCH
2	GA5052825	WEDGE LOCK, 2 WAY, SOCKETS, DT SERIES, DEUTSCH
3	GA5052830	RECEPTACLE, 2 WAY, PINS, DT SERIES, DEUTSCH
4	GA5052835	WEDGE LOCK, 2 WAY, DT SERIES, DEUTSCH
5	GA5011831	PLUG, 3 WAY SOCKETS, SHRINK BOOT ADAPTER, DEUTSCH
6	GA5017719	WEDGE LOCK, BLUE, 3 PIN, SUIT TERMINATOR, DEUTSCH
7	GA5017721	WEDGE LOCK, BLUE, 3 SOCKET, DEUTSCH
8	GA5050740	RECEPTICAL, 3 PIN, SHRINK BOOT, DEUTSCH
9	GA5050750	WEDGE LOCK, ORANGE, 3 SOCKET, DEUTSCH

Continued over page

Electrical Connectors - Deutsch

ITEM NO.	PART NUMBER	DESCRIPTION
10	GA5050760	WEDGE LOCK, GREEN, 3 PIN, DEUTSCH
11	GA5050761	WEDGE LOCK, GREEN, 3 SOCKET, DEUTSCH
12	GA5054350	PLUG, GREY, 120 OHM RESISTOR TERMINATOR, DEUTSCH
13	GA5054365	RECEPTACLE, 3 WAY 3 PIN, Y SPLITTER, DEUTSCH
14	GA5050840	PLUG, 4 WAY SOCKET, DT SERIES, DEUTSCH
15	GA5050845	WEDGE LOCK, ORANGE, 4 WAY SOCKETS, DEUTSCH
16	GA5050765	WEDGE LOCK, GREEN, 4 WAY PINS, DEUTSCH
17	GA5013783	RECEPTACLE, 4 WAY, PINS, DT SERIES DEUTSCH
18	GA5050960	PLUG, 6 WAY SOCKET, DT SERIES, DEUTSCH
19	GA5050965	WEDGE LOCK, ORANGE, 6 WAY SOCKETS, DT SERIES, DEUTSCH
20	GA5061780	PLUG, 12 WAY SOCKETS, DT SERIES, DEUTSCH
21	GA5061785	RECEPTACLE, 12 WAY SUIT PINS, DT SERIES, DEUTSCH
22	GA5070590	WEDGE LOCK, GREEN, 12 WAY SUIT PINS, DEUTSCH
23	GA5070595	WEDGE LOCK, GREEN, 12 WAY SOCKETS, DEUTSCH
24	GA5061790	RECEPTACLE, 31 PIN, HPD SERIES, DEUTSCH
25	GA5060440	PLUG, 48 PIN SUITS PINS, DRB SERIES, DEUTSCH
26	GA5060445	WEDGE LOCK, 48 WAY SUITS PINS, DRB SERIES, DEUTSCH
27	GA5060450	FLANGE CONNECTOR, 48 WAY SUITS DRB SERIES, DEUTSCH
28	GA5060455	WEDGE LOCK, 48 WAY SUIT, SOCKETS, DRB SERIES, DEUTSCH
29	GA5060460	PLUG, 48 PIN SUITS SOCKETS, DRB SERIES, DEUTSCH
30	GA5061170	RUBBER BOOT, SUIT 48 PIN DRB SERIES, DEUTSCH
31	GA5061260	PIN, MALE, SOLID, NICKEL, NUMBER 12, DEUTSCH
32	GA5061270	SOCKET, FEMALE, SOLID, NICKEL, NUMBER 12, DEUTSCH
33	GA5053235	SOCKET, FEMALE, NICKEL, NUMBER 16, 14 AWG, GREEN BAND, DEUTSCH
34	GA5061220	PIN, MALE, GOLD, NUMBER 16, DEUTSCH
35	GA5061240	PIN, MALE, SOLID, NICKEL, NUMBER 16, GREEN BAND, AWG 14, DEUTSCH
36	GA5075255	PIN, MALE, NICKEL, CRIMP STYLE, NUMBER 16, DEUTSCH
37	GA3000022	SOCKET, FEMALE, NICKEL, CRIMP STYLE, NUMBER 16, DEUTSCH
38	GA5061225	SOCKET, FEMALE, SOLID GOLD, NUMBER 16, DEUTSCH
39	GA5061230	SOCKET, FEMALE, SOLID, NICKEL, NUMBER 16, DEUTSCH
40	GA5061235	SOCKET, SOLID GOLD, NUMBER 16, 16-20 AWG, DEUTSCH
41	GA5061200	PIN, MALE, SOLID, NICKEL, NUMBER 20, DEUTSCH
42	GA5061205	PIN, MALE, SOLID, GOLD, NUMBER 20, DEUTSCH
43	GA5061210	SOCKET, FEMALE, SOLID, NICKEL, NUMBER 20, DEUTSCH
44	GA5061215	SOCKET, FEMALE, SOLID, GOLD, NUMBER 20, DEUTSCH
45	GA5052840	SEALING PLUG, WHITE, SIZE 12 - 16, DEUTSCH

Electrical Connectors - Weather Pack

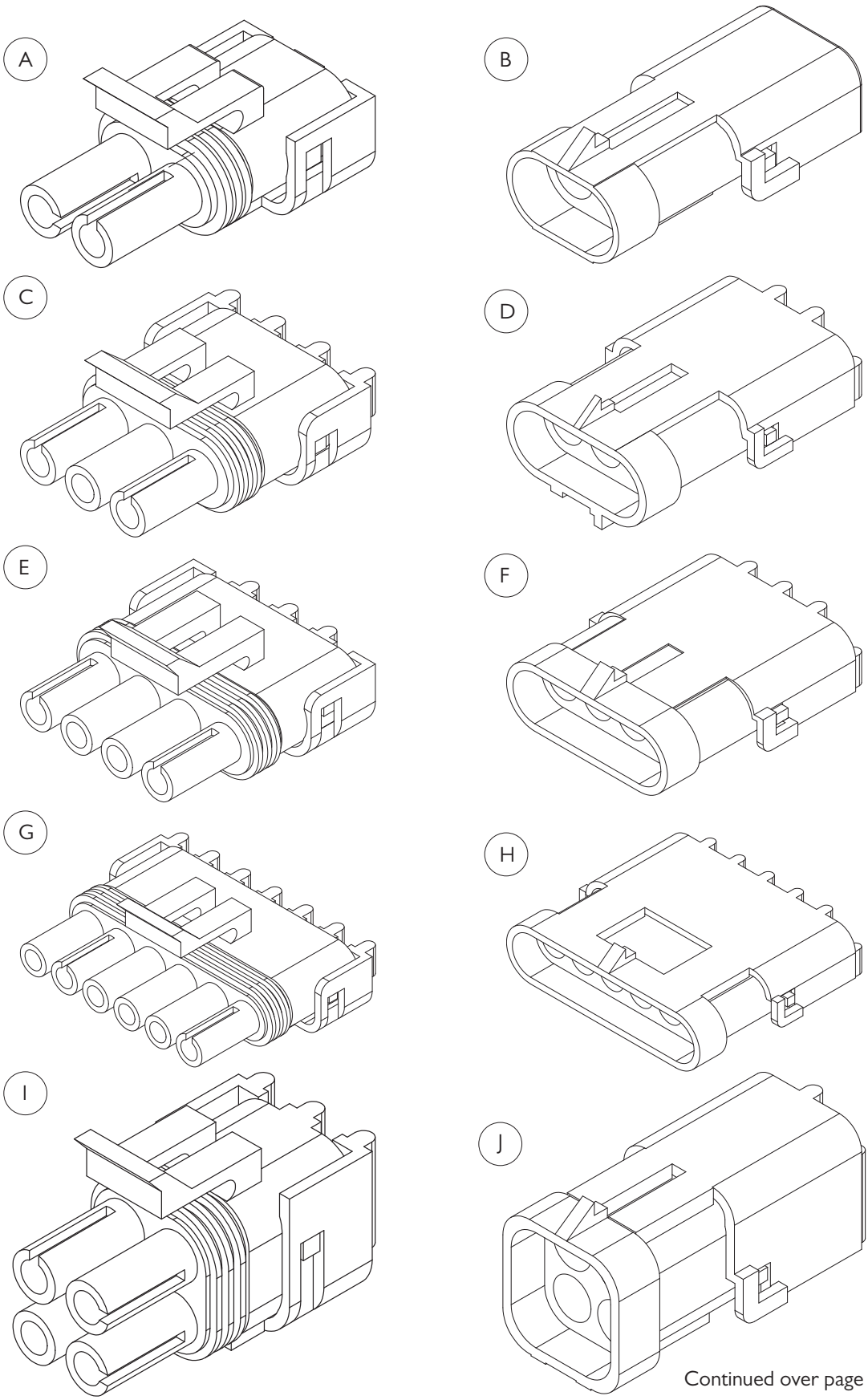

Continued over page

Electrical Connectors - Weather Pack

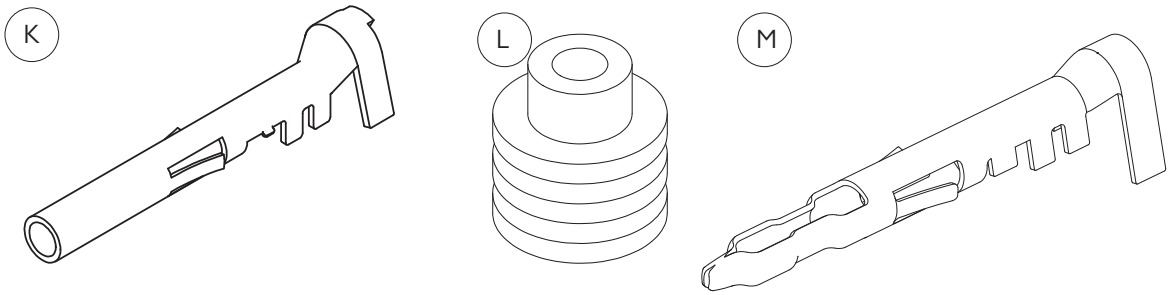

ITEM NO.	PART NUMBER	DESCRIPTION
-	GA5049685	BOOT, WEATHER PACK, SUIT 2 PIN CONNECTOR
-	GA5049690	BOOT, WEATHER PACK, SUIT 3 PIN CONNECTOR
A	GA5001351	CONNECTOR, MALE, 2 PIN, WEATHER PACK
B	GA5007381	CONNECTOR, 2 PIN, FEMALE, WEATHER PACK
C	GA5002211	CONNECTOR, MALE, 3 PIN, WEATHER PACK
D	GA5048550	CONNECTOR, FEMALE, 3 PIN, WEATHER PACK
E	GA5007385	CONNECTOR, MALE, 4 PIN, WEATHER PACK
F	GA5007383	CONNECTOR, FEMALE, 4 PIN, FLAT, WEATHER PACK
G	GA5004009	CONNECTOR, MALE, 6 PIN, WEATHER PACK
H	GA5048510	CONNECTOR, FEMALE, 6 PIN, WEATHER PACK
I	GA5049000	CONNECTOR, FEMALE, 4 PIN, SQUARE, WEATHER PACK
J	GA5050805	CONNECTOR, MALE, 4 PIN, SQUARE, WEATHER PACK
K	GA5016619	PIN, FEMALE, SEALED, WEATHER PACK, WIRE 1.0 - 2.0MM
L	GA5014857	SEAL, GREEN, WEATHER PACK CONNECTOR, WIRE FROM 2.03 - 2.85MM
M	GA5016617	PIN, MALE, SEALED, WEATHER PACK, WIRE 1.0 - 2.0MM

Electrical Harnesses & Components

BASE SYSTEM

PART NUMBER	DESCRIPTION
GA3000322	ELECTRICAL HARNESS, CONSOLE
GA3000323	ELECTRICAL HARNESS, MAIN CABIN
GA3000324	ELECTRICAL HARNESS, MAIN CHASSIS
GA3000325	ELECTRICAL HARNESS, BATTERY KIT
GA3000326	ELECTRICAL HARNESS, CABIN POWER KIT
GA5060327	ELECTRICAL HARNESS, PLUMBING
GA3000328	ELECTRICAL HARNESS, BOOM CENTER
GA3000329	ELECTRICAL HARNESS, PLC BOOM HYDRAULICS
GA3000330	ELECTRICAL HARNESS, ARENS PBS
GA3000345	ELECTRICAL HARNESS, CHASSIS HYDRAULICS G6 MY20
GA3000346	ELECTRICAL HARNESS, CHASSIS PLC
GA3000391	ELECTRICAL HARNESS, REAR CAMERA, 11M EXTENSION, IFM
GA3000392	ELECTRICAL HARNESS, ETHERNET CABLE, 5M M12, SUIT IFM
GA3000394	ELECTRICAL HARNESS, TANK CAL, FLOW METER
GA3000410	ELECTRICAL HARNESS, PLC BOOM HYDRAULICS, 48M
GA3000144	SENSOR, LINEAR NON CONTACT, STEERING, 250MM, RAVEN
GA3000145	ROSE END, M10 SUIT GA3000144, RAVEN
GA3000146	STUD END, M10 SUIT GA3000144, RAVEN
GA5060062	ELECTRICAL HARNESS, COOLER CABIN FRIDGE, SUIT RAVEN CAB

RAVEN CONTROL MODULE (RCM) SYSTEM

PART NUMBER	DESCRIPTION
GA3000030	TERMINATOR, CAN, ACTIVE, SUIT ISO BUS, RAVEN
GA3000138	ELECTRICAL HARNESS, MAIN ISO SIDE CONSOLE ARMREST, RAVEN
GA3000142	ELECTRICAL HARNESS, ROOF CABLE EXTENSION, RAVEN
GA3000198	ELECTRICAL HARNESS, SUIT CR7 ISO VT BASIC, RAVEN
GA3000252	ELECTRICAL HARNESS, RCM, G6 CHASSIS
GA3000258	ELECTRICAL HARNESS, RCM, 16 SECTION 3 TIER, BOOM CENTER
GA3000264	ELECTRICAL HARNESS, RCM, 16 SECTION 3 TIER, BREAKOUT
GA3000433	ELECTRICAL HARNESS, RCM, 16 SECTION 3 TIER BREAKOUT, SUIT 48M BOOM
GA3000474	ELECTRICAL HARNESS, RCM, SECTION CONTROL, INNER BOOM, 36M
GA3000475	ELECTRICAL HARNESS, RCM, SECTION CONTROL, OUTER BOOM, 36M
GA3000476	ELECTRICAL HARNESS, RCM, SECTION CONTROL, INNER BOOM, 42M
GA3000477	ELECTRICAL HARNESS, RCM, SECTION CONTROL, OUTER BOOM, 42M
GA3000259	ELECTRICAL HARNESS, BOOM INNER 36-48M, 16 SECTION , 2 TIER
GA3000569	ELECTRICAL HARNESS, BOOM OUTER 36-48M, 16 SECTION , 2 TIER
GA3000260	ELECTRICAL HARNESS, BOOM INNER 36-48M, 16 SECTION , 1 TIER (TIER 3) 3TS PRO, RAVEN
GA3000270	ELECTRICAL HARNESS, BOOM OUTER 36-48M, 16 SECTION , 1 TIER (TIER 3) 3TS PRO, RAVEN

Continued over page

Electrical Harnesses & Components

RAVEN XRT SYSTEM

PART NUMBER	DESCRIPTION
GA3000370	ECU, RAVEN XRT, AUTOBOOM, ABM, WITH AUTOBOOM UNLOCK
GA3000371	ECU, ISOBUS REM, RAVEN EXPANSION MODULE, XRT
GA3000373	ELECTRICAL HARNESS, RAVEN XRT MAIN, GOLDACRES SPEC
GA3000375	ELECTRICAL HARNESS, RAVEN XRT PRIMARY BOOM, 40’
GA3000376	ELECTRICAL HARNESS, RAVEN XRT SECONDARY BOOM, 35’, WITH TERMINATOR
GA3000378	ROTARY SENSOR KIT, WITH LOOSE HARDWARE, RTP, 50 DEGREE, RAVEN XRT
GA3000379	DAMPER, MR, RAVEN XRT, VARIABLE, MAGNETO-RHEOLOGICAL, 6” STROKE
GA3000382	SENSOR, RAVEN XRT BOOM HEIGHT RADAR
GA3000386	ELECTRICAL HARNESS, RAVEN XRT PRIMARY BOOM, 35’
GA3000387	ELECTRICAL HARNESS, RAVEN XRT SECONDARY BOOM, 30’

AUTOSTEER SYSTEM

PART NUMBER	DESCRIPTION
GA3000423	ELECTRICAL HARNESS, AUTO STEER, JD BRIDGE
GA3000148	ELECTRICAL HARNESS, JD STARFIRE ROOF ADAPTER, RAVEN
GA3000152	ELECTRICAL HARNESS, TRIMBLE 372 ANTENNA ROOF ADAPTER, RAVEN
GA3000062	ELECTRICAL HARNESS, RAVEN ISO TO TRIMBLE FMX/FM1000, TMX 2050

Chapter 16

SCHEMATICS

Hydraulic Schematic - Transmission

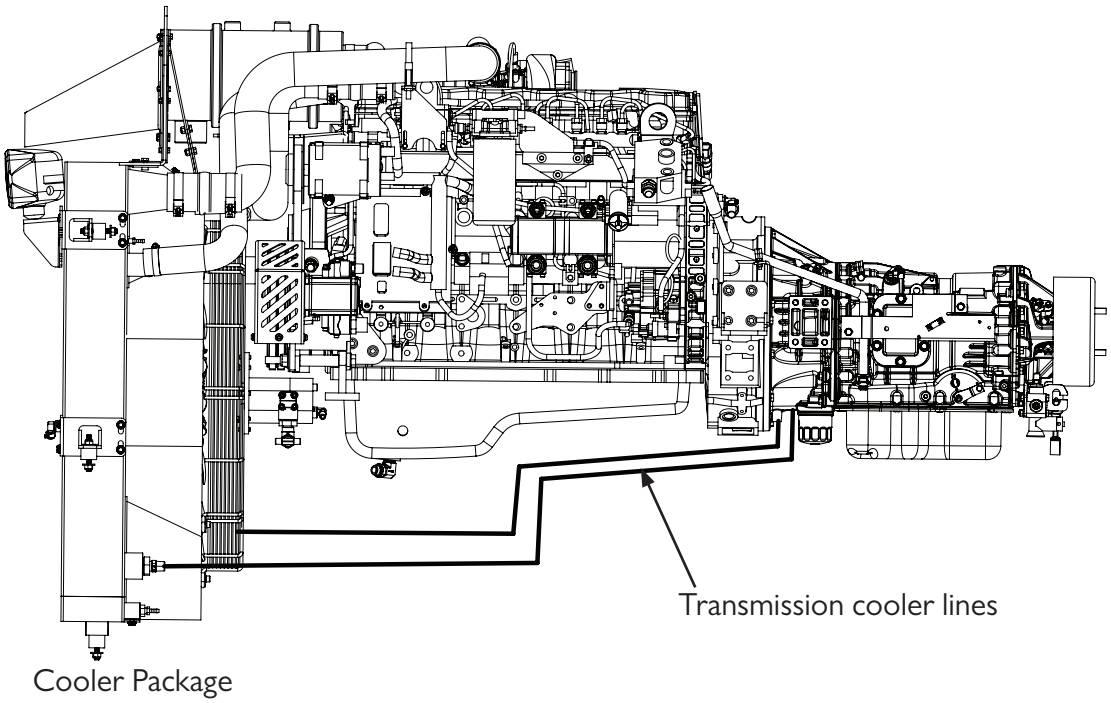

Hydraulic Schematic - 36-42m Booms

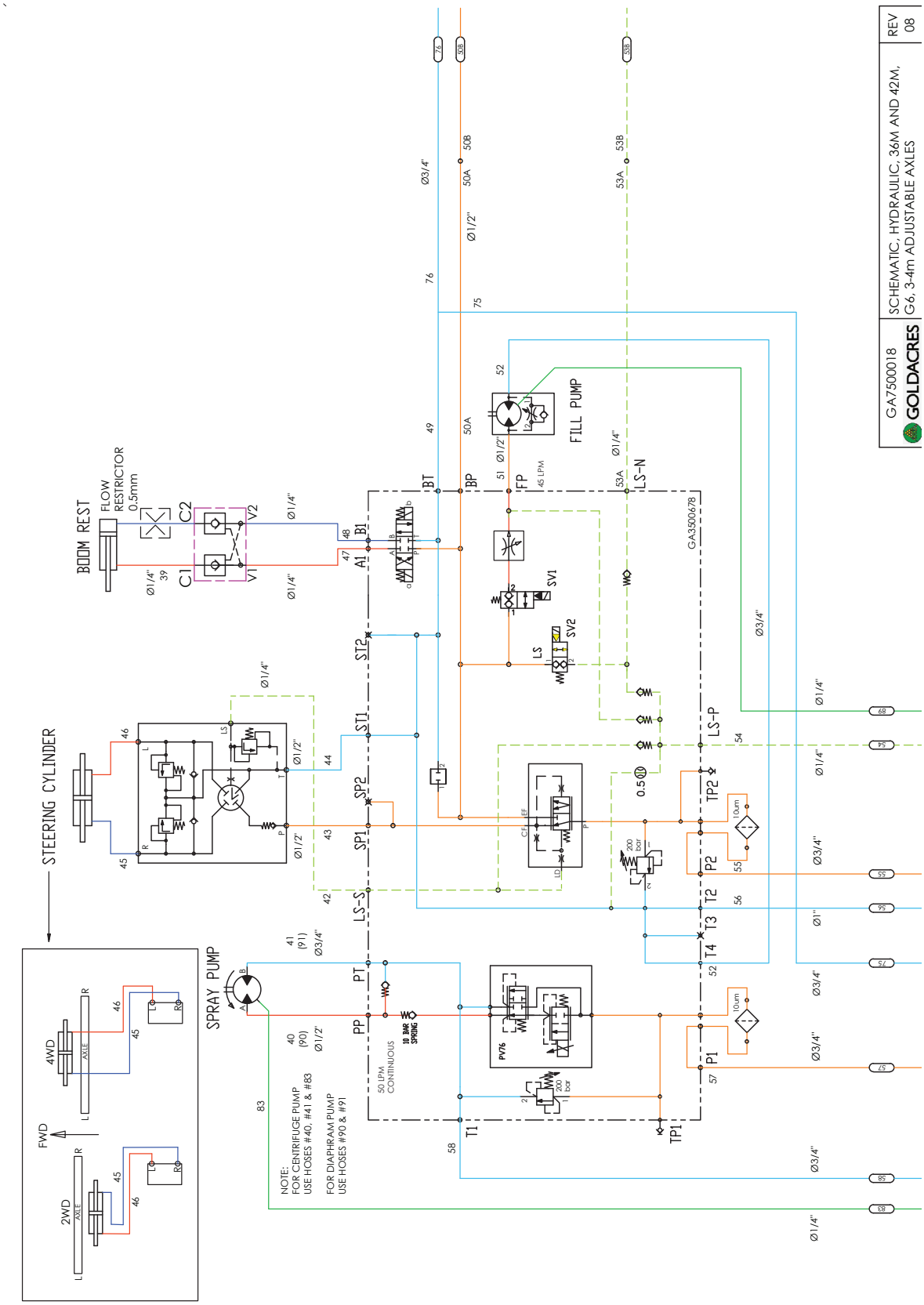

Continued over page

Hydraulic Schematic - 36-42m Booms

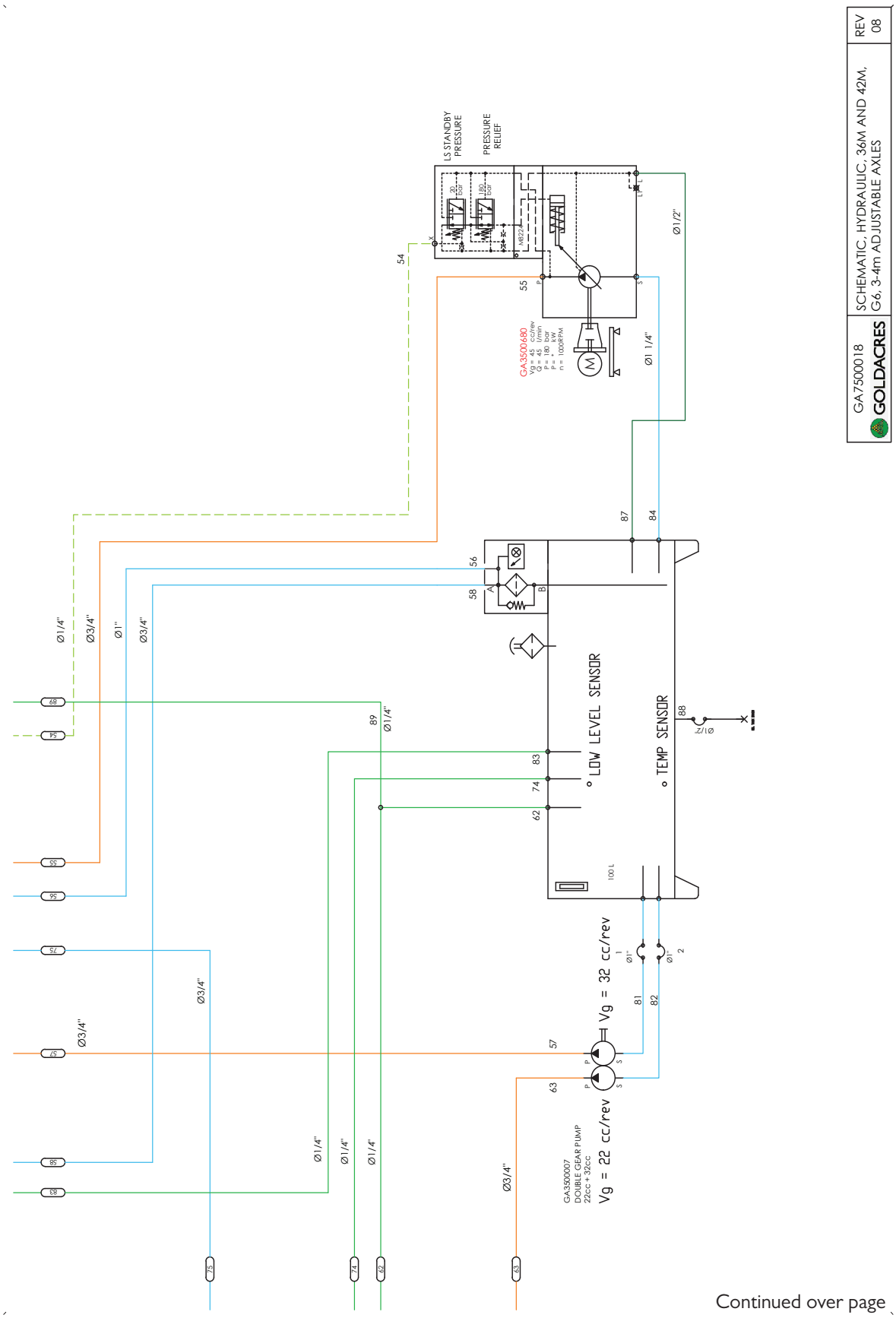

Continued over page

Hydraulic Schematic - 36-42m Booms

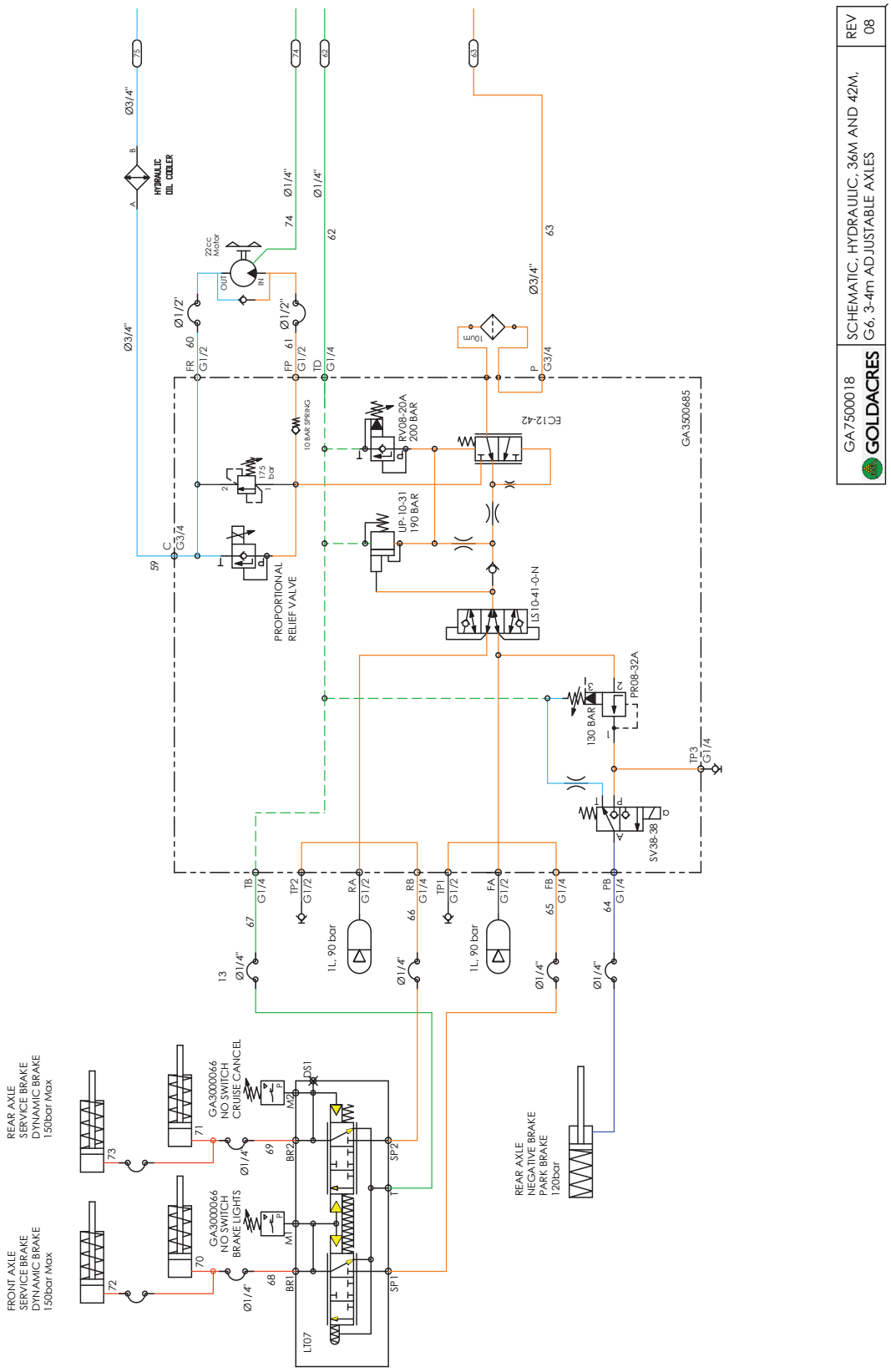

Continued over page

Hydraulic Schematic - 36-42m Booms

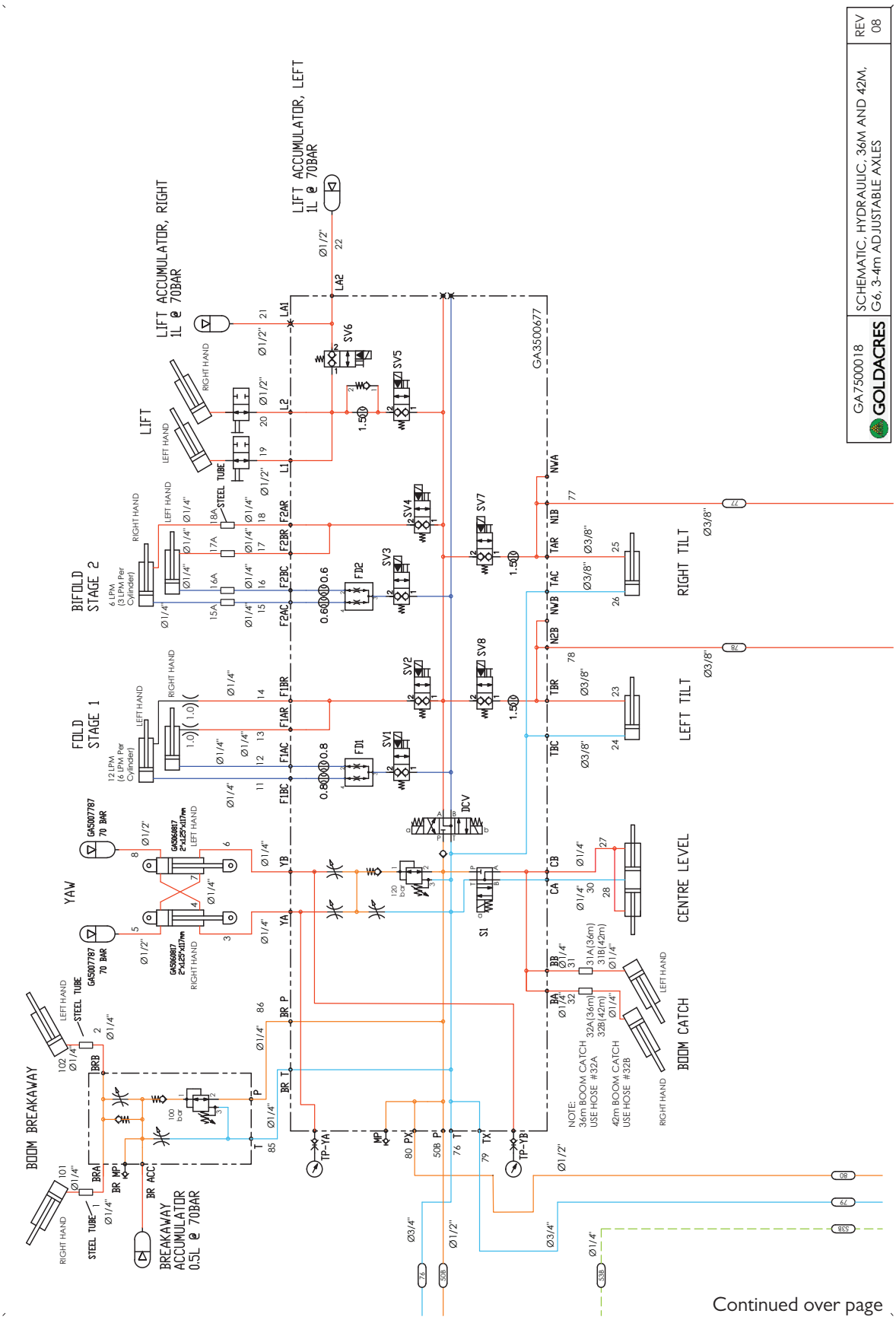

Continued over page

Hydraulic Schematic - 36-42m Booms

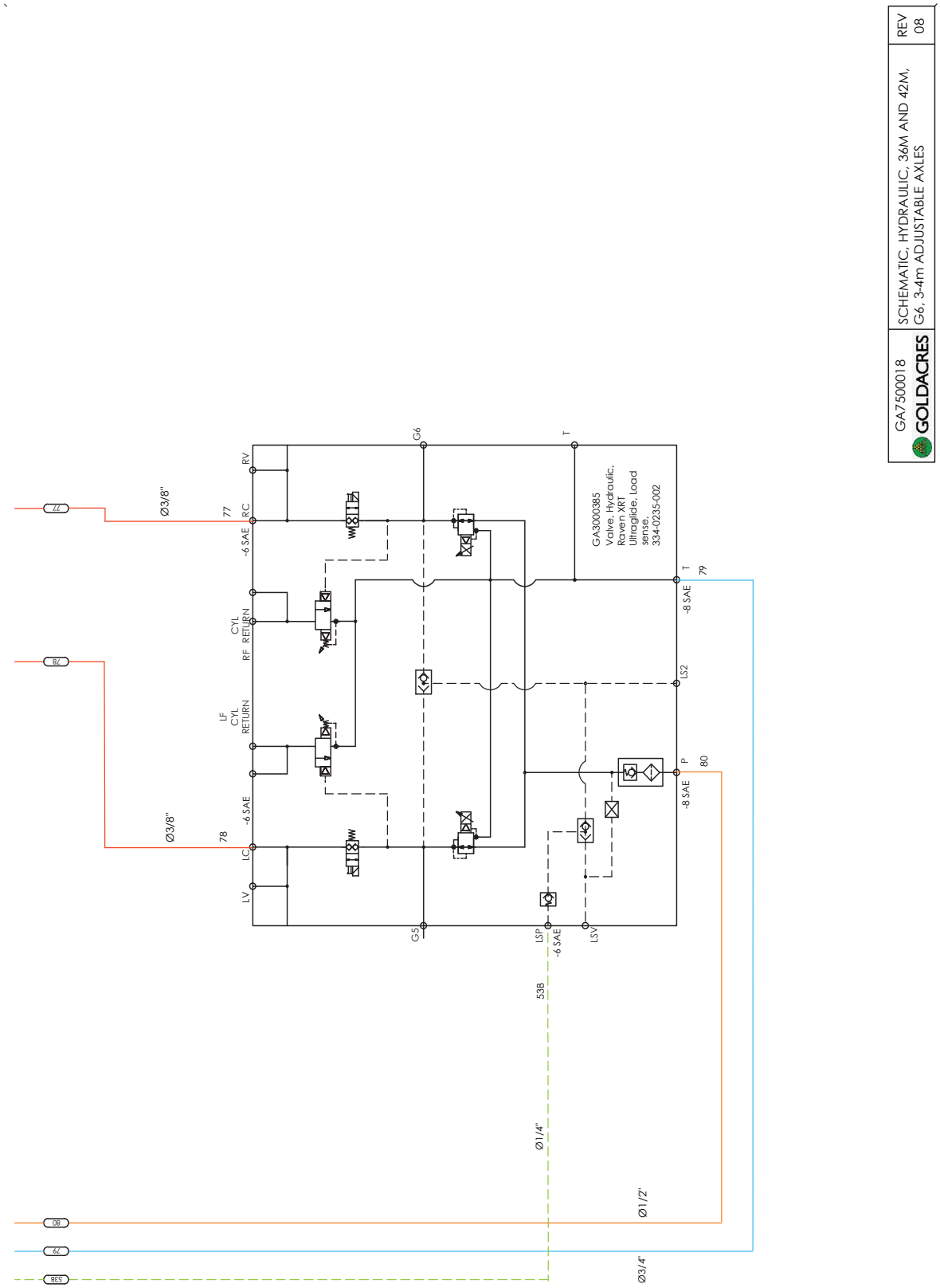

Continued over page

Hydraulic Schematic - 36-42m Booms

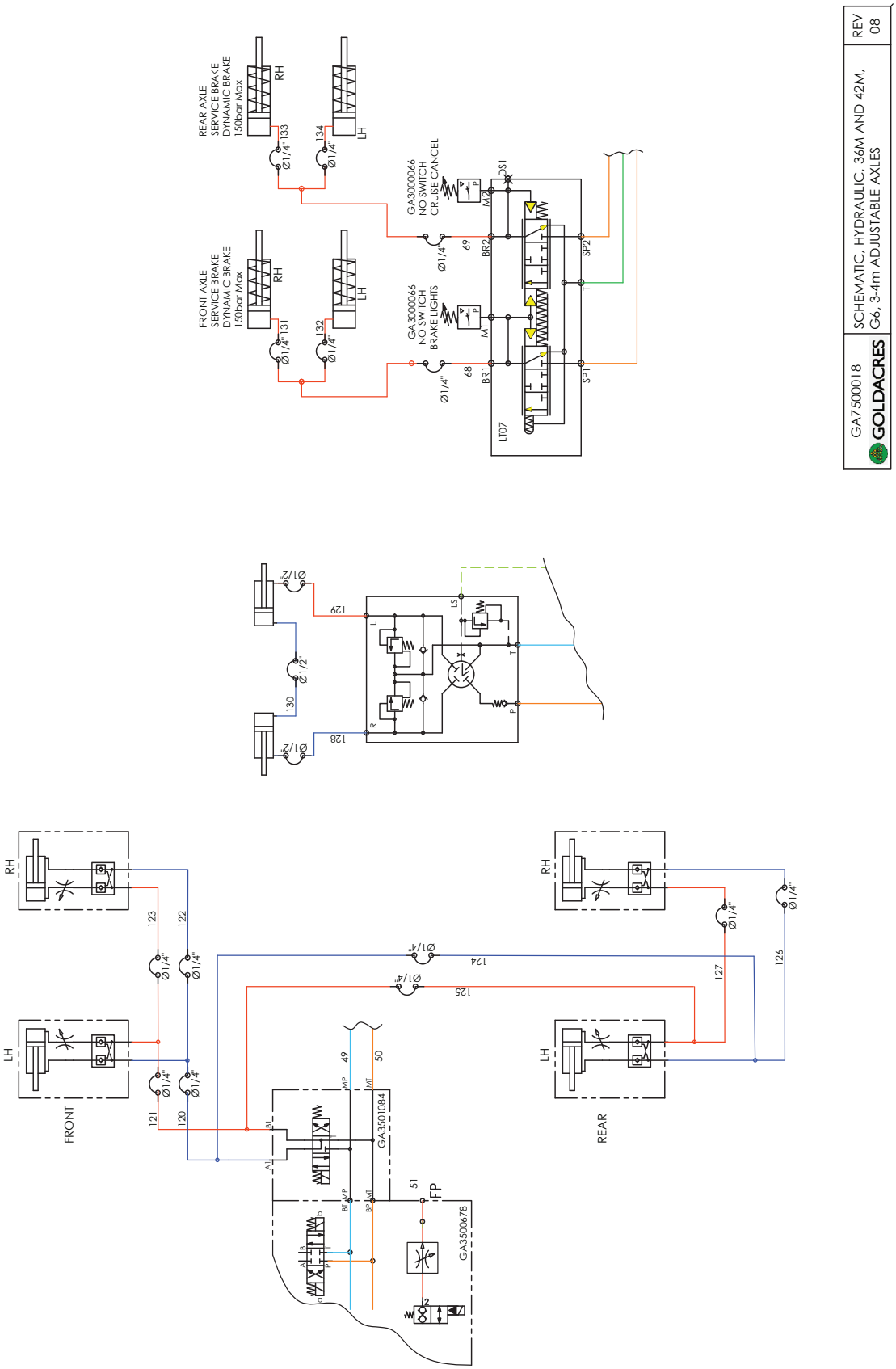

Continued over page

Hydraulic Schematic - 48m Booms

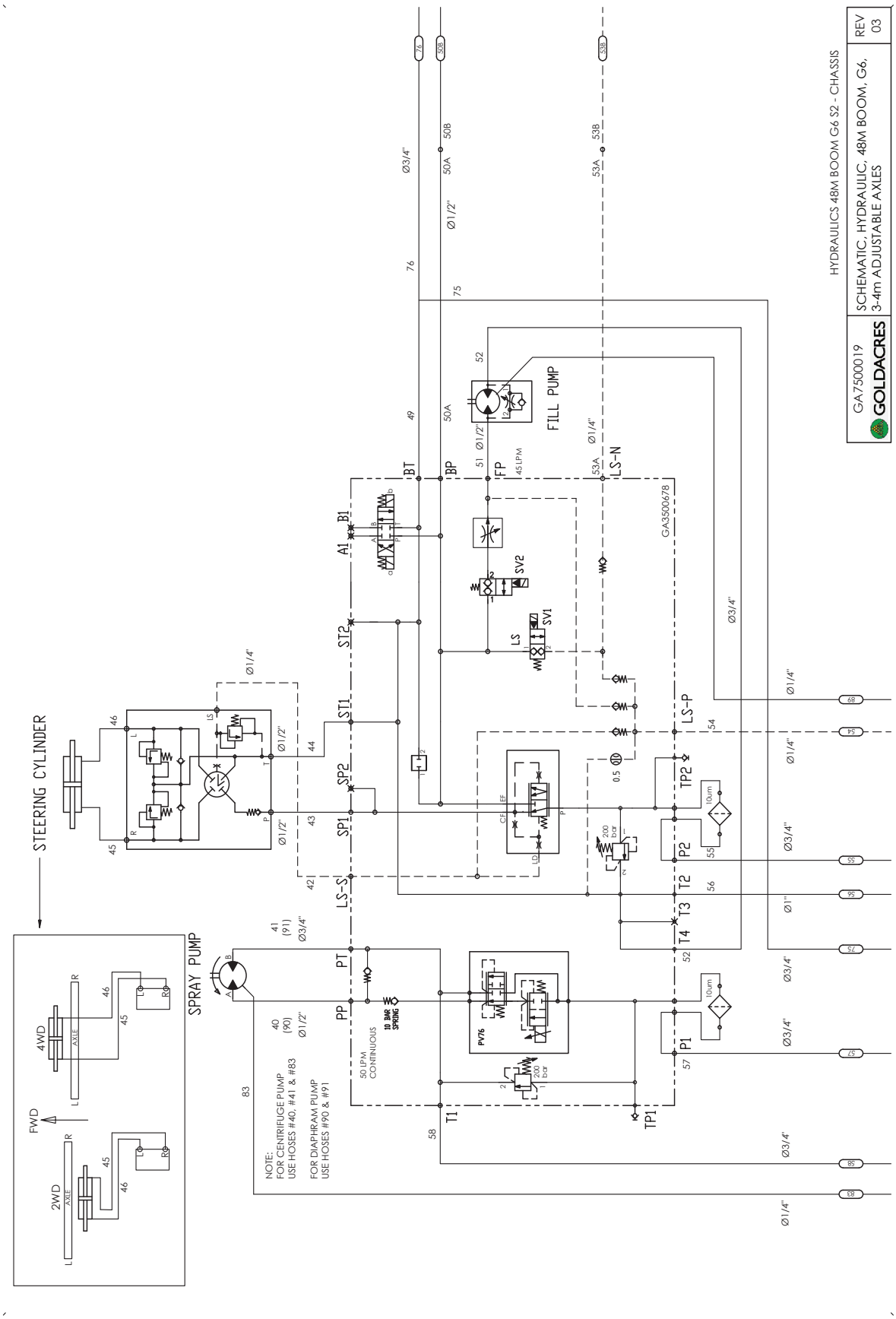

Hydraulic Schematic - 48m Booms

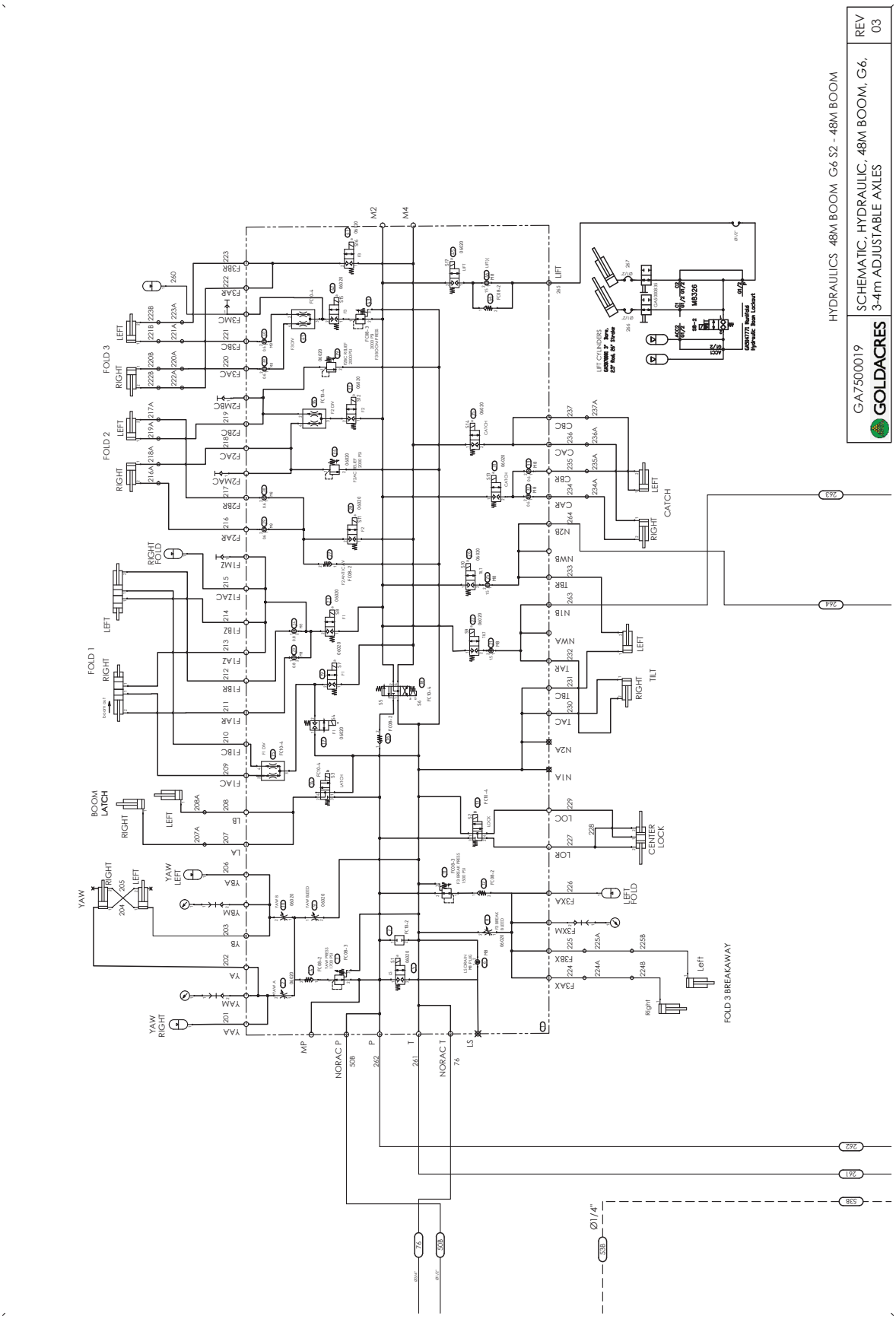

Hydraulic Schematic - 48m Booms

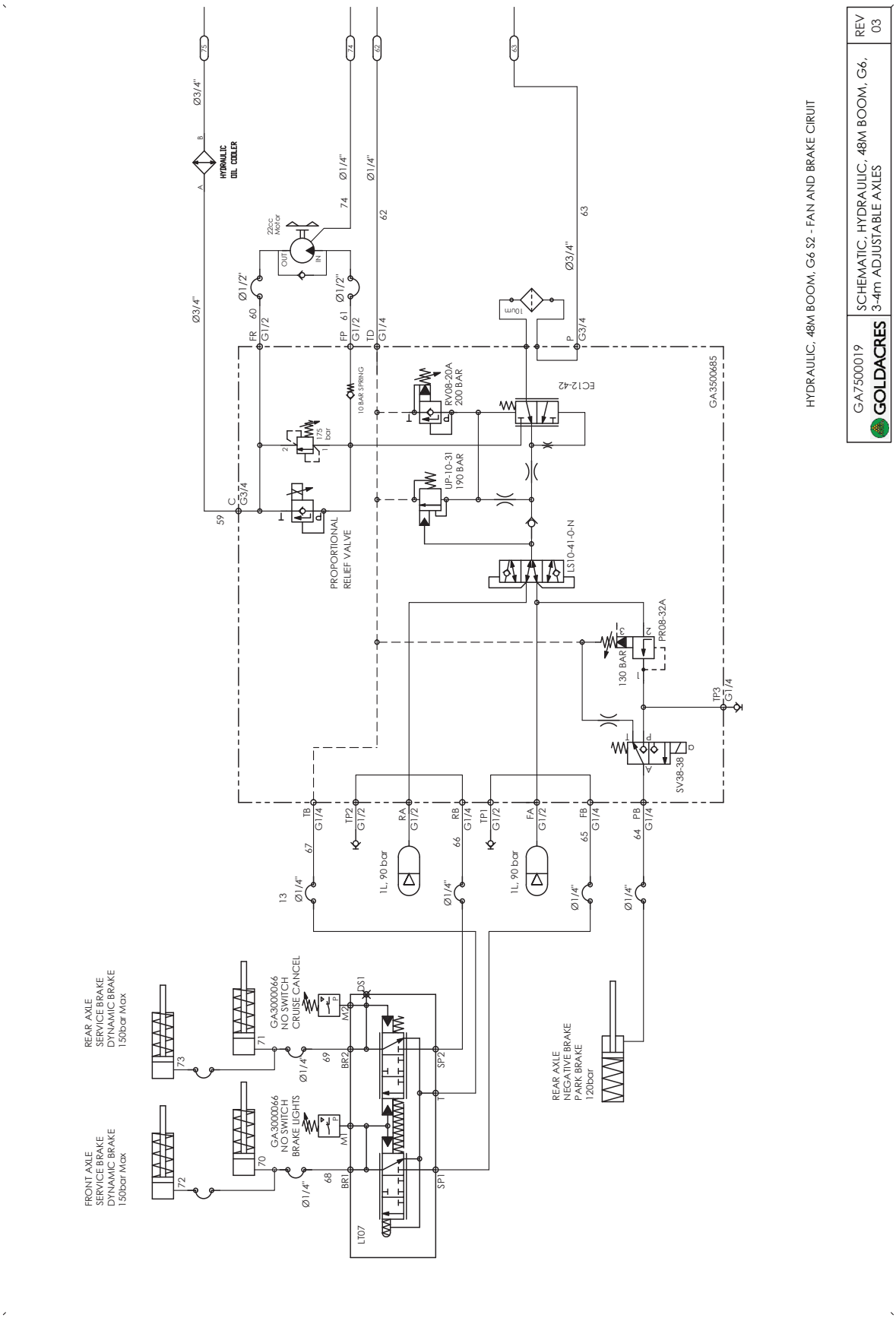

Hydraulic Schematic - 48m Booms

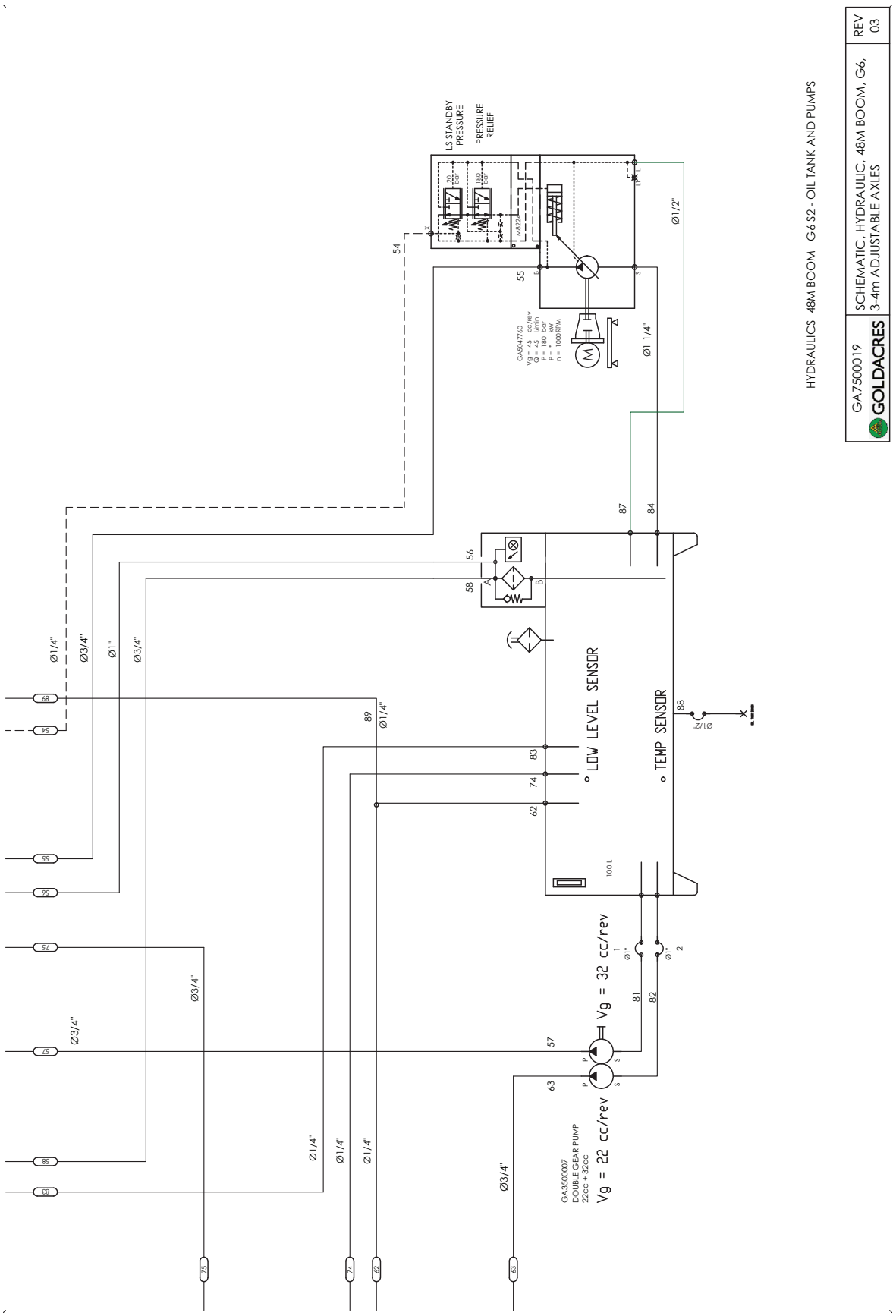

Hydraulic Schematic - 48m Booms

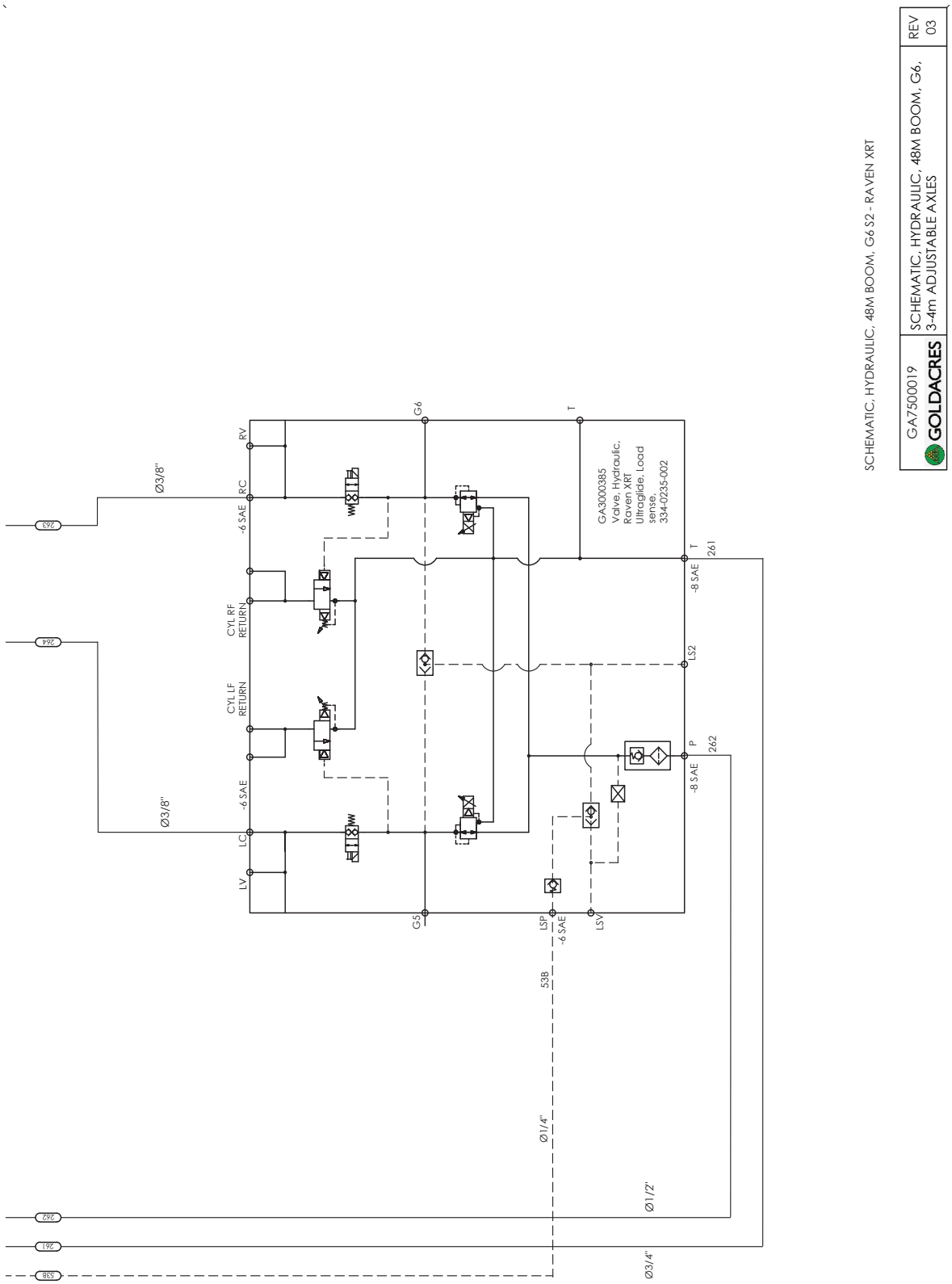

Hydraulic Schematic - 48m Booms

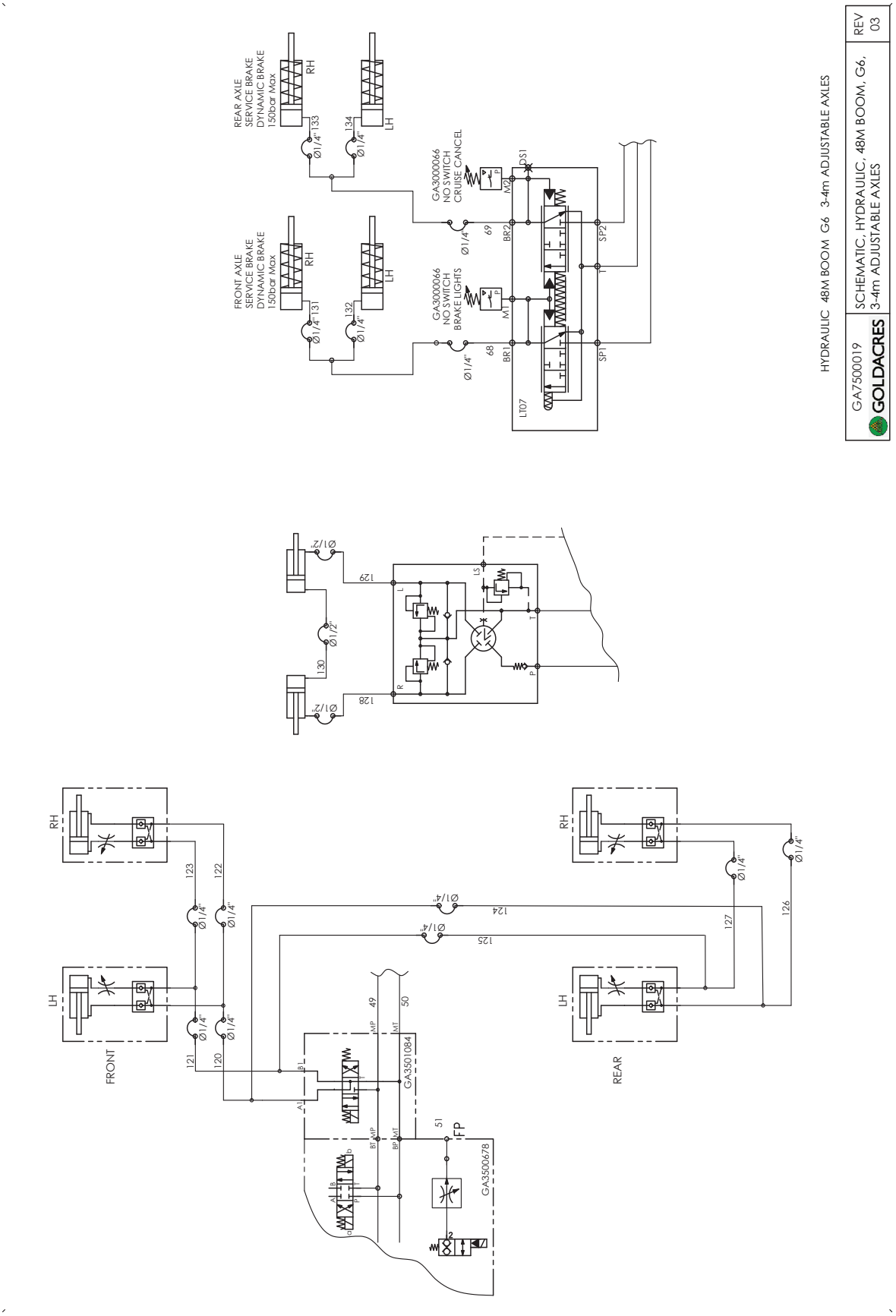

Hydraulic Hoses - Contact Goldacres Dealer Suppport

Plumbing Schematic - Diaphragm Pump

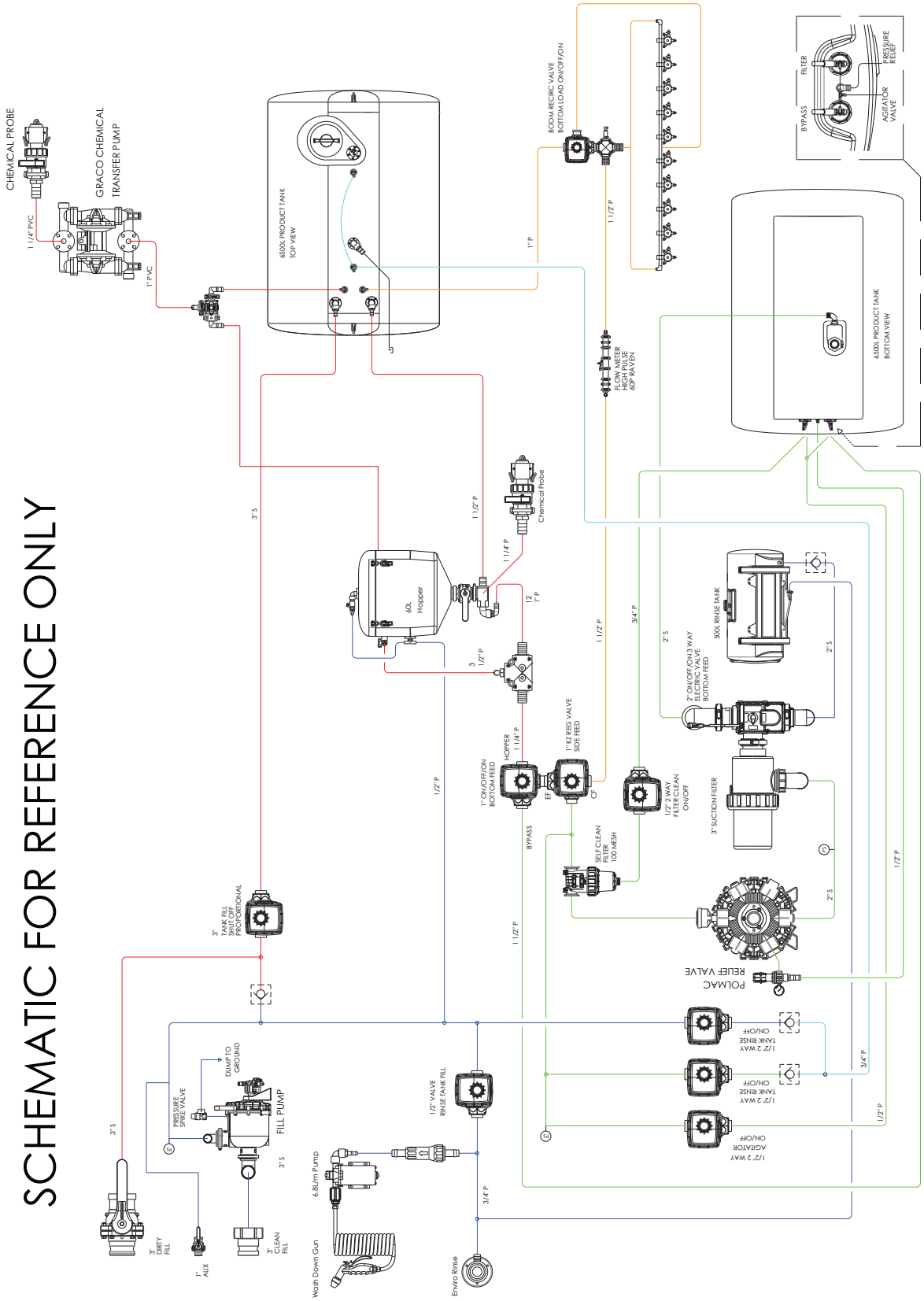

Plumbing Schematic - Centrifugal Pump

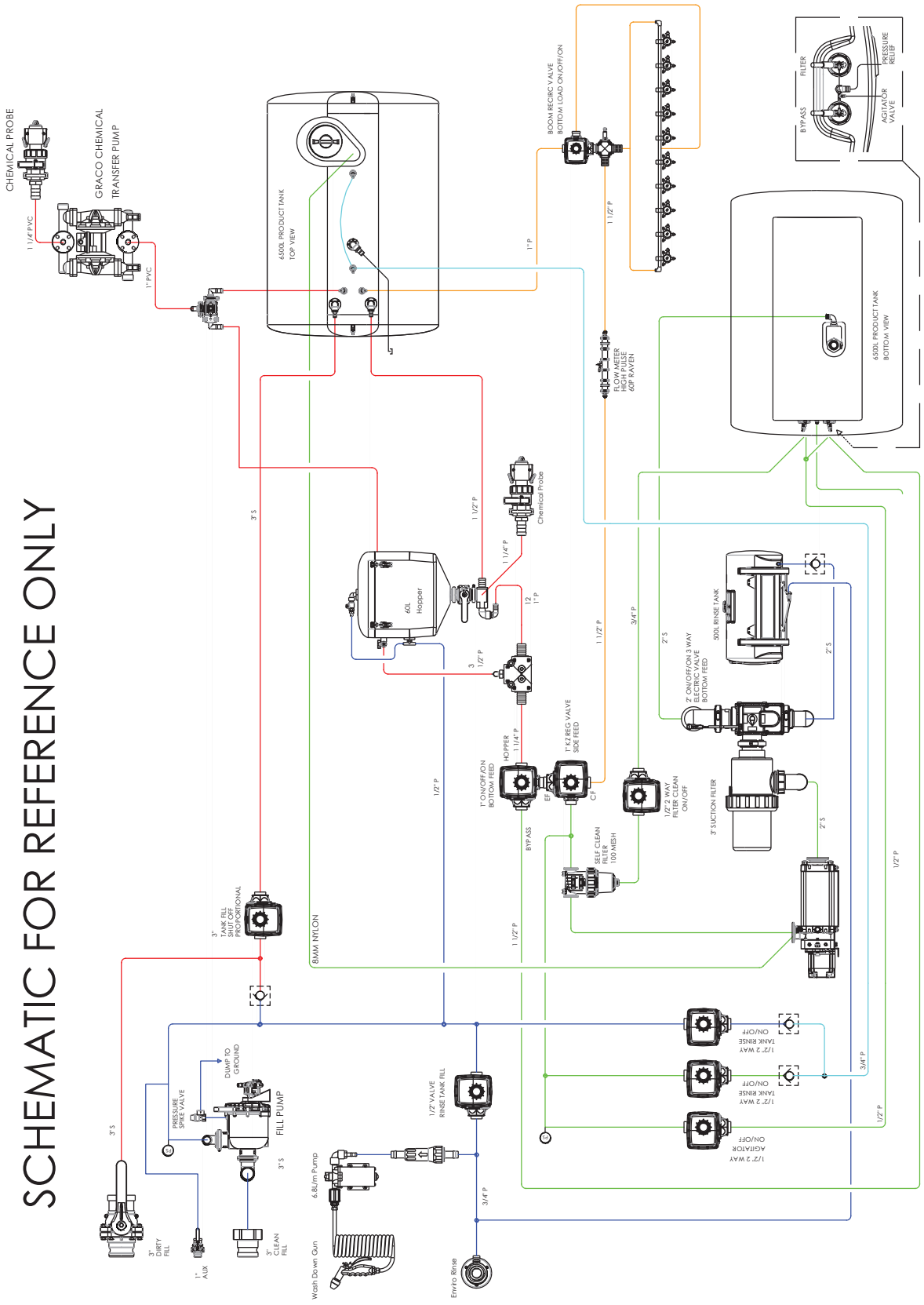

Continues Over Page

Plumbing Schematic - Centrifugal Pump

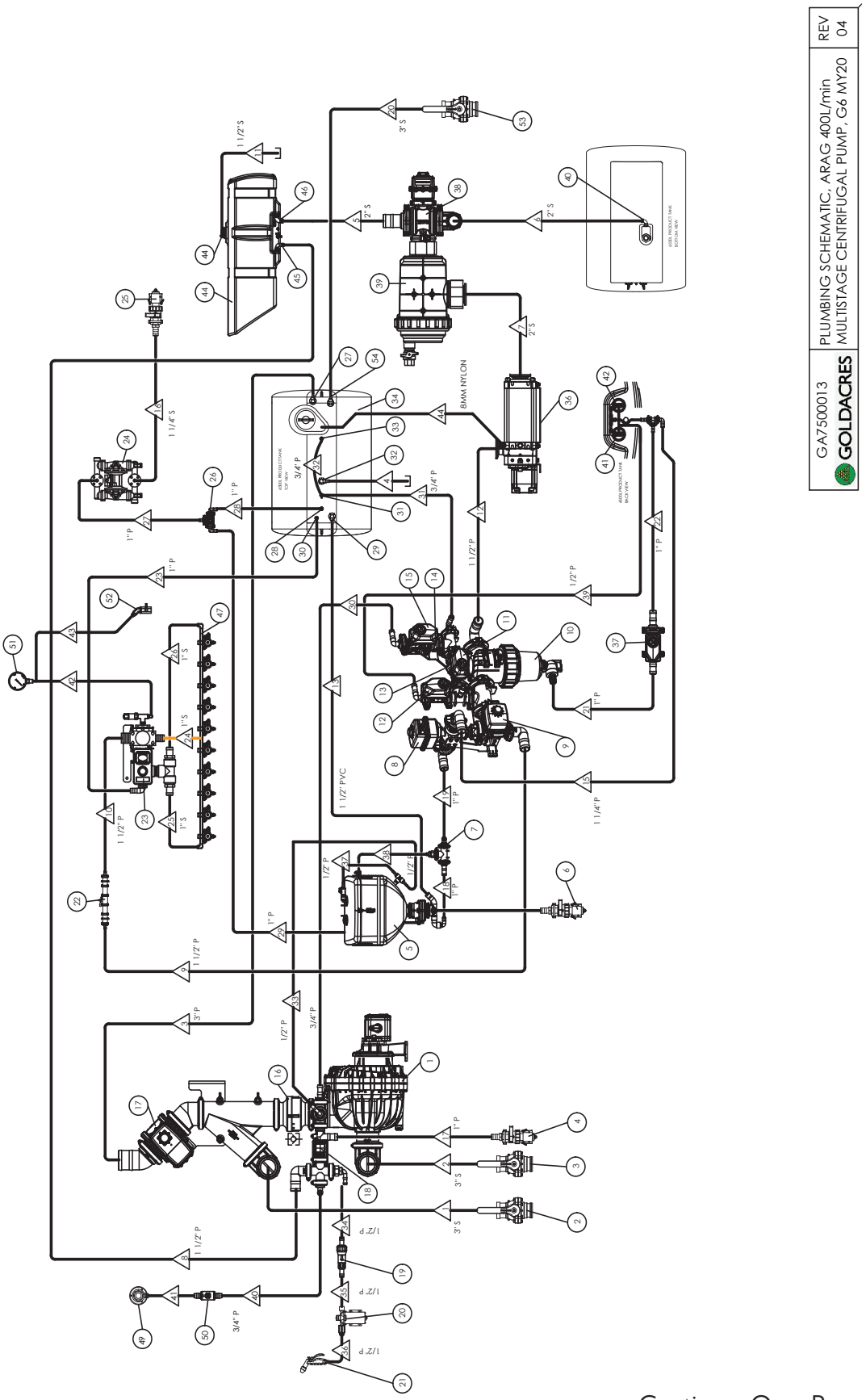

Continues Over Page

Plumbing Schematic - Centrifugal Pump

(X) FEATURE DESCRIPTIONS

ITEM	DESCRIPTION
1	FILL PUMP 3" HYPRO
2	3" FILL BALL VALVE, DIRTY LINE
3	3" FILL BALL VALVE. CLEAN LINE
4	1" FILL PUMP AUXILLARY OUTLET BALL VALVE
5	HOPPER
6	1" CHEMICAL INDUCTION PROBE BALL VALVE FOR HOPPER VENTURI
7	HOPPER TEE
8	HOPPER/BYPASS 3 WAY ELECTRIC BALL VALVE, BOTTOM LOAD
9	BOOM REGULATOR 3 WAY BALL VALVE VALVE, SIDE LOAD
10	PRESSURE FILTER
11	TANK RINSE 2 WAY ELECTRIC BALL VALVE, PUMP PRESSURE
12	AGITATOR JET 2 WAY ELECTRIC BALL VALVE
13	1" CHECK VALVE
14	1" CHECK VALVE
15	TANK RINSE 2 WAY ELECTRIC BALL VALVE, FILL PRESSURE
16	3" CHECK VALVE
17	3" TANK FILL 2 WAY ELECTRIC BALL VALVE, PROPORTIONAL
18	RINSE TANK FILL 2 WAY ELECTRIC BALL VALVE
19	IN LINE FILTER
20	WASH DOWN GUN PUMP
21	WASH DOWN GUN
22	BOOM FLOW METER ASSEMBLY
23	BOOM RECIRCULATION 3 WAY ELECTRIC BALL VALVE, SIDE LOAD
24	CHEMICAL INDUCTION PUMP, GRACO HUSKY
25	1' CHEMICAL INDUCTION PROBE BALL VALVE FOR CHEMICAL PUMP
26	CHEMICAL PUMP OUTLET SELECTOR 1" 3 WAY BALL VALVE
27	TANK FILL INLET - PRODUCT TANK
28	CHEMICAL INDUCTION PUMP TANK INLET - PRODUCT TANK
29	HOPPER TANK INLET - PRODUCT TANK
30	BOOM RECIRCULATION TANK INLET - PRODUCT TANK
31	TANK RINSE NOZZLE 1 - PRODUCT TANK
32	TANK OVERFLOW OUTLET - PRODUCT TANK
33	TANK RINSE NOZZLE 2 - PRODUCT TANK
34	TANK 6000L
36	SPRAY PUMP
37	FILTER CLEAN 2 WAY ELECTRIC BALL VALVE
38	PUMP SUCTION TANK SELECTOR 3 WAY ELECTRIC BALL VALVE BL
39	PUMP SUCTION FILTER
40	PUMP OUTLET - PRODUCT TANK
41	AGITATOR 1
42	AGITATOR 2
43	PRESSURE RELIEF VALVE INLET - PRODUCT TANK
44	RINSE TANK
45	FILL INLET - RINSE TANK
46	PUMP OUTLET - RINSE TANK
47	BOOM
48	RINSE TANK OVERFLOW
49	MICRoMATIC RINSE SOCKET
50	MICROMATIC RINSE SOCKET BALL VALVE
51	SPRAY PRESSURE GAUGE
52	GAUGE DRAIN VALVE
53	3" FILL BALL VALVE, FRONT SEPARATE FILL
54	TANK FILL INLET - PRODUCT TANK, FRONT SEPARATE FILL

(X) HOSE LIST

DO NOT CUT ANY HOSES MARKED WITH

HOSE	SIZE	DESCRIPTION	LENGTH - MM	WHERE CUT
1	3" PVC	DIRTY FILL 3' BALL VALVE TO FILL PUMP ASSEMBLY	560	STAGE 3
2	3" PVC	CLEAN FILL 3' BALL VALVE TO FILL PUMP ASSEMBLY	350	STAGE 3
3	3" PVC	FILL PUMP ASSEMBLY TO PRODUCT TANK	1320	STAGE 3
4	3" PVC	PRODUCT TANK OVERFLOW HOSE	#4000	TANKS
20	3" PVC	(OPTION 50058) SEPARATE FRONT FILL 3' BALL VALVE TO PRODUCT TANK	4000	STAGE 3
5	2" PVC	RINSE TANK TO SUCTION FILTER BALL VALVE	1100	STAGE 3
6	2" S	PRODUCT TANK TO SUCTION FILTER BALL VALVE	490	STAGE 3
7	2" S	SUCTION FILTER TO SPRAY PUMP	#700	STAGE 3
8	1 1/2" PVC	FILL PUMP TO RINSE TANK	2100	STAGE 3
11	1 1/2" PVC	RINSE TANK OVERFLOW	1050	STAGE 3
13	1 1/2" PVC	HOPPER OUTLET TO PRODUCT TANK	6500	STAGE 3
9	1 1/2" P	REGULATOR VALVE TO FLOW METER	5500	STAGE 3
10	1 1/2" P	FLOW METER TO BOOM FLOW DISTRIBUTOR	1180	STAGE 3
12	1 1/2" P	SPRAY PUMP TO PRESSURE FILTER	1700	STAGE 3
14				
15	1 1/4" P	HOPPER/BYPASS VALVE TO AGITATOR	1400	STAGE 3
16	1 1/4" S	CHEMICAL PROBE CAMLOCK VALVE TO CHEMICAL PUMP	#420	SUBASSEMBLY
17	1" P	FILL PUMP TO AUXILLARY OUTLET BALL VALVE	800	STAGE 3
18	1" P	HOPPER PRESSURE TEE TO HOPPER BOTTOM VENTURI PORT	3000	STAGE 3
19	1" P	HOPPER/BYPASS VALVE TO HOPPER PRESSURE TEE	#350	STAGE 1
21	1" P	PRESSURE FILTER TO FILTER CLEAN VALVE	430	STAGE 3
22	1" P	FILTER CLEAN VALVE TO AGITATOR	1500	STAGE 3
23	1" P	BOOM RECIRC VALVE TO PRODUCT TANK	5000	STAGE 3
24	1" S	BOOM FLOW DISTRIBUTOR TO BOOM POLY CENTRE	#1200	BOOM
25	1" S	BOOM FLOW DISTRIBUTOR TO LEFT BOOM POLY END	#3300	BOOM
26	1" S	BOOM FLOW DISTRIBUTOR TO RIGHT BOOM POLY END	#3300	BOOM
27	1" P	CHEMICAL PUMP TO 3 WAY BALL VALVE	#400	SUBASSEMBLY
28	1" P	3 WAY BALL VALVE TO PRODUCT TANK	6500	STAGE 3
29	1" P	3 WAY BALL VALVE TO HOPPER	3200	STAGE 3
30	3/4' P	FILL PUMP TO TANK RINSE BALL VALVE	1100	STAGE 3
31	3/4' P	TANK RINSE TEE TO TANK RINSE NOZZLE A	5000	STAGE 3
32	3/4' P	TANK RINSE NOZZLE A TO TANK RINSE NOZZLE B	#1050	TANKS
40	3/4" P	FILL PUMP TO MICROMATIC RINSE SOCKET BALL VALVE	120	STAGE 3
41	3/4" P	MICROMATIC RINSE SOCKET BALL VALVE TO FILL PUMP TEE	800	STAGE 3
33	1/2" P	FILL PUMP TO HOPPER DRUM RINSE TEE	2900	STAGE 3
34	1/2" P	FILL PUMP TO WASH DOWN GUN PUMP FILTER	820	STAGE 3
35	1/2" P	WASH DOWN GUN PUMP FILTER TO WASHDOWN GUN PUMP	#80	SUBASSEMBLY
36	1/2" P	WASHDOWN GUN PUMP TO WASHDOWN GUN	3500	STAGE 3
37	1/2" P	HOPPER DRUM RINSE TEE TO HOPPER RINSE NOZZLE	850	STAGE 3
38	1/2" P	HOPPER PRESSURE TEE TO HOPPER MIXING JET BALL VALVE	3100	STAGE 3
39	1/2" P	AGITATOR BALL VALVE TO AGITATOR JETS	2300	STAGE 3
42	6MM NYLON	BOOM RECIRCULATION VALVE TO PRESSURE GAUGE	#9700	STAGE 3
43	6MM NYLON	PRESSURE GAUGE TO DRAIN VALVE	#5000	STAGE 3
44	8MM NYLON	ARAG PUMP BLEED LINE	6000	STAGE 3

GA7500013 GOLDACRES	PLUMBING SCHEMATIC, ARAG 400L/min MULTISTAGE CENTRIFUGAL PUMP, G6 MY20	REV 04

Plumbing Schematic - Diaphragm Pump

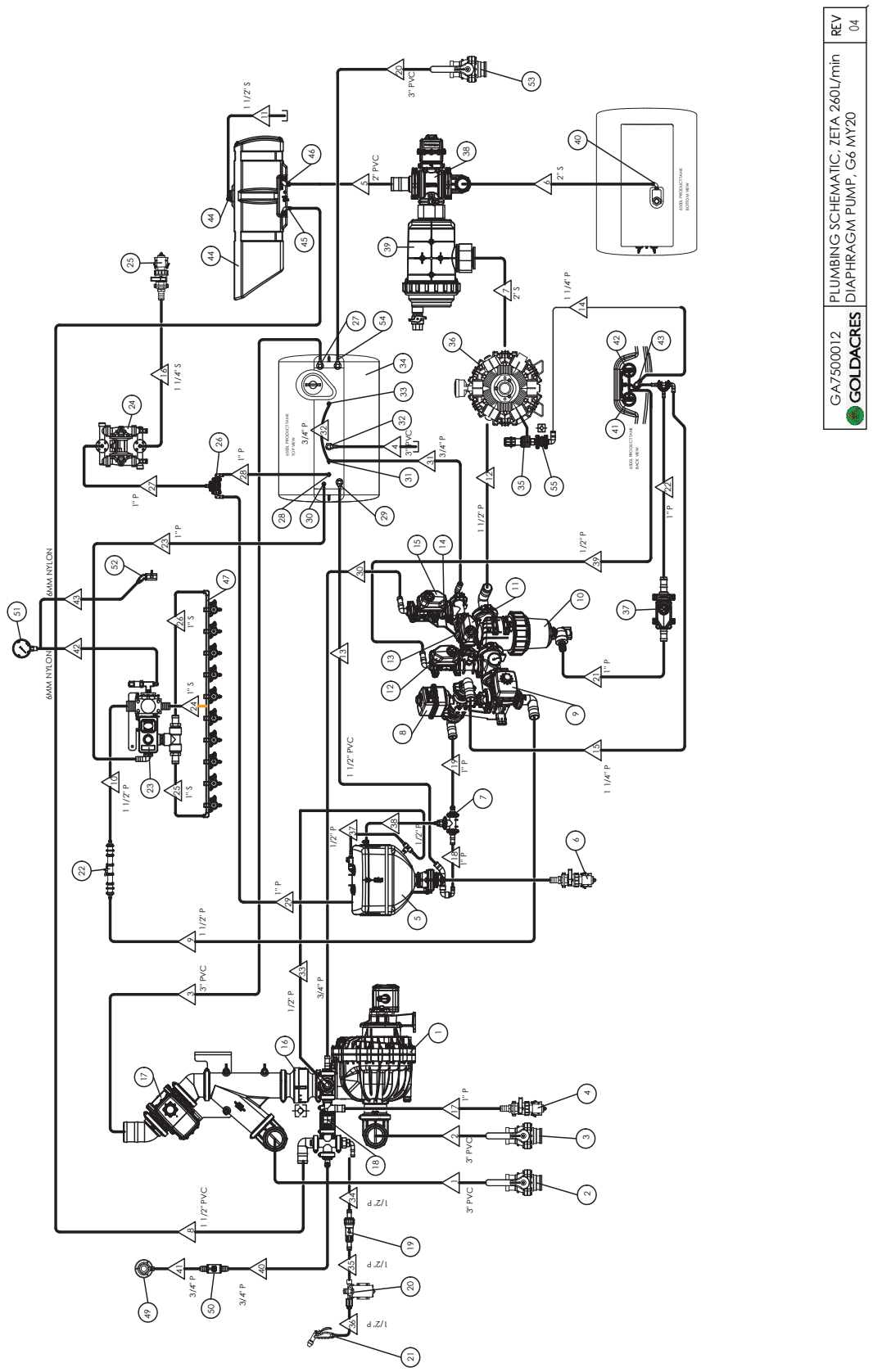

Plumbing Schematic - Diaphragm Pump

(X) FEATURE DESCRIPTIONS

ITEM	DESCRIPTION
1	FILL PUMP 3" HYPRO
2	3" FILL BALL VALVE, DIRTY LINE
3	3" FILL BALL VALVE. CLEAN LINE
4	1" FILL PUMP AUXILLARY OUTLET BALL VALVE
5	HOPPER
6	1" CHEMICAL INDUCTION PROBE BALL VALVE FOR HOPPER VENTURI
7	HOPPER TEE
8	HOPPER/BYPASS 3 WAY ELECTRIC BALL VALVE, BOTTOM LOAD
9	BOOM REGULATOR 3 WAY BALL VALVE VALVE, SIDE LOAD
10	PRESSURE FILTER
11	TANK RINSE 2 WAY ELECTRIC BALL VALVE, PUMP PRESSURE
12	AGITATOR JET 2 WAY ELECTRIC BALL VALVE
13	1" CHECK VALVE
14	1" CHECK VALVE
15	TANK RINSE 2 WAY ELECTRIC BALL VALVE, FILL PRESSURE
16	3" CHECK VALVE
17	3" TANK FILL 2 WAY ELECTRIC BALL VALVE, PROPORTIONAL
18	RINSE TANK FILL 2 WAY ELECTRIC BALL VALVE
19	IN LINE FILTER
20	WASH DOWN GUN PUMP
21	WASH DOWN GUN
22	BOOM FLOW METER ASSEMBLY
23	BOOM RECIRCULATION 3 WAY ELECTRIC BALL VALVE, SIDE LOAD
24	CHEMICAL INDUCTION PUMP, GRACO HUSKY
25	1' CHEMICAL INDUCTION PROBE BALL VALVE FOR CHEMICAL PUMP
26	CHEMICAL PUMP OUTLET SELECTOR 1" 3 WAY BALL VALVE
27	TANK FILL INLET - PRODUCT TANK
28	CHEMICAL INDUCTION PUMP TANK INLET - PRODUCT TANK
29	HOPPER TANK INLET - PRODUCT TANK
30	BOOM RECIRCULATION TANK INLET - PRODUCT TANK
31	TANK RINSE NOZZLE 1 - PRODUCT TANK
32	TANK OVERFLOW OUTLET - PRODUCT TANK
33	TANK RINSE NOZZLE 2 - PRODUCT TANK
34	TANK 6000L
35	RELIEF VALVE (ONLY FITTED WITH UDOR PUMP)
36	SPRAY PUMP
37	FILTER CLEAN 2 WAY ELECTRIC BALL VALVE
38	PUMP SUCTION TANK SELECTOR 3 WAY ELECTRIC BALL VALVE BL
39	PUMP SUCTION FILTER
40	PUMP OUTLET - PRODUCT TANK
41	AGITATOR 1
42	AGITATOR 2
43	PRESSURE RELIEF VALVE INLET - PRODUCT TANK
44	RINSE TANK
45	FILL INLET - RINSE TANK
46	PUMP OUTLET - RINSE TANK
47	BOOM
48	RINSE TANK OVERFLOW
49	MICROMATIC RINSE SOCKET
50	MICROMATIC RINSE SOCKET BALL VALVE
51	SPRAY PRESSURE GAUGE
52	GAUGE DRAIN VALVE
53	3" FILL BALL VALVE, FRONT SEPARATE FILL
54	TANK FILL INLET - PRODUCT TANK, FRONT SEPARATE FILL
55	CHECK VALVE, 1" MANIFOLD FLANGE

(X) HOSE LIST

DO NOT CUT ANY HOSES MARKED WITH #

HOSE	SIZE	DESCRIPTION	LENGTH - MM	WHERE CUT
1	3" PVC	DIRTY FILL 3' BALL VALVE TO FILL PUMP ASSEMBLY	560	STAGE 3
2	3" PVC	CLEAN FILL 3' BALL VALVE TO FILL PUMP ASSEMBLY	350	STAGE 3
3	3" PVC	FILL PUMP ASSEMBLY TO PRODUCT TANK	1320	STAGE 3
4	3" PVC	PRODUCT TANK OVERFLOW HOSE	#4000	TANKS
20	3" PVC	(OPTION 50058) SEPARATE FRONT FILL 3' BALL VALVE TO PRODUCT TANK	#4000	STAGE 3
5	2" PVC	RINSE TANK TO SUCTION FILTER BALL VALVE	1100	STAGE 3
6	2" S	PRODUCT TANK TO SUCTION FILTER BALL VALVE	490	STAGE 3
7	2" S	SUCTION FILTER TO SPRAY PUMP	700	STAGE 3
8	1 1/2" PVC	FILL PUMP TO RINSE TANK	2100	STAGE 3
11	1 1/2" PVC	RINSE TANK OVERFLOW	1050	STAGE 3
13	1 1/2" PVC	HOPPER OUTLET TO PRODUCT TANK	6500	STAGE 3
9	1 1/2" P	REGULATOR VALVE TO FLOW METER	5500	STAGE 3
10	1 1/2" P	FLOW METER TO BOOM FLOW DISTRIBUTOR	1180	STAGE 3
12	1 1/2" P	SPRAY PUMP TO PRESSURE FILTER - 2WD - 4WD	1250 1500	STAGE 3
14	1 1/4" P	PRESSURE RELIEF VALVE TO PRODUCT TANK (WHERE FITTED)	3500	STAGE 3
15	1 1/4" P	HOPPER/BYPASS VALVE TO AGITATOR	1400	STAGE 3
16	1 1/4" S	CHEMICAL PROBE CAMLOCK VALVE TO CHEMICAL PUMP	#420	SUBASSEMBLY
17	1" P	FILL PUMP TO AUXILLARY OUTLET BALL VALVE	800	STAGE 3
18	1" P	HOPPER PRESSURE TEE TO HOPPER BOTTOM VENTURI PORT	3000	STAGE 3
19	1" P	HOPPER/BYPASS VALVE TO HOPPER PRESSURE TEE	#350	STAGE 1
21	1" P	PRESSURE FILTER TO FILTER CLEAN VALVE	430	STAGE 3
22	1" P	FILTER CLEAN VALVE TO AGITATOR	1500	STAGE 3
23	1" S	BOOM RECIRC VALVE TO PRODUCT TANK	5000	STAGE 3
24	1" S	BOOM FLOW DISTRIBUTOR TO BOOM POLY CENTRE	#1200	BOOM
25	1" S	BOOM FLOW DISTRIBUTOR TO LEFT BOOM POLY END	#3300	BOOM
26	1" P	BOOM FLOW DISTRIBUTOR TO RIGHT BOOM POLY END	#3300	BOOM
27	1" P	CHEMICAL PUMP TO 3 WAY BALL VALVE	#400	SUBASSEMBLY
28	1" P	3 WAY BALL VALVE TO PRODUCT TANK	6500	STAGE 3
29	1" P	3 WAY BALL VALVE TO HOPPER	3200	STAGE 3
30	3/4" P	FILL PUMP TO TANK RINSE BALL VALVE	1100	STAGE 3
31	3/4" P	TANK RINSE TEE TO TANK RINSE NOZZLE A	5000	STAGE 3
32	3/4" P	TANK RINSE NOZZLE A TO TANK RINSE NOZZLE B	#1050	TANKS
40	3/4" P	FILL PUMP TO MICROMATIC RINSE SOCKET BALL VALVE	120	STAGE 3
41	3/4" P	MICROMATIC RINSE SOCKET BALL VALVE TO FILL PUMP TEE	800	STAGE 3
33	1/2" P	FILL PUMP TO HOPPER DRUM RINSE TEE	2900	STAGE 3
34	1/2" P	FILL PUMP TO WASH DOWN GUN PUMP FILTER	820	STAGE 3
35	1/2" P	WASH DOWN GUN PUMP FILTER TO WASHDOWN GUN PUMP	#80	SUBASSEMBLY
36	1/2" P	WASHDOWN GUN PUMP TO WASHDOWN GUN	3500	STAGE 3
37	1/2" P	HOPPER DRUM RINSE TEE TO HOPPER RINSE NOZZLE	850	STAGE 3
38	1/2" P	HOPPER PRESSURE TEE TO HOPPER MIXING JET BALL VALVE	3100	STAGE 3
39	1/2" P	AGITATOR BALL VALVE TO AGITATOR JETS	2300	STAGE 3
42	6MM NYLON	BOOM RECIRCULATION VALVE TO PRESSURE GAUGE	#9700	STAGE 3
43	6MM NYLON	PRESSURE GAUGE TO DRAIN VALVE	#5000	STAGE 3

GA7500012 GOLDACRES	PLUMBING SCHEMATIC, ZETA 260L/min DIAPHRAGM PUMP, G6 MY20	REV 04

Pneumatic Schematic - Chassis

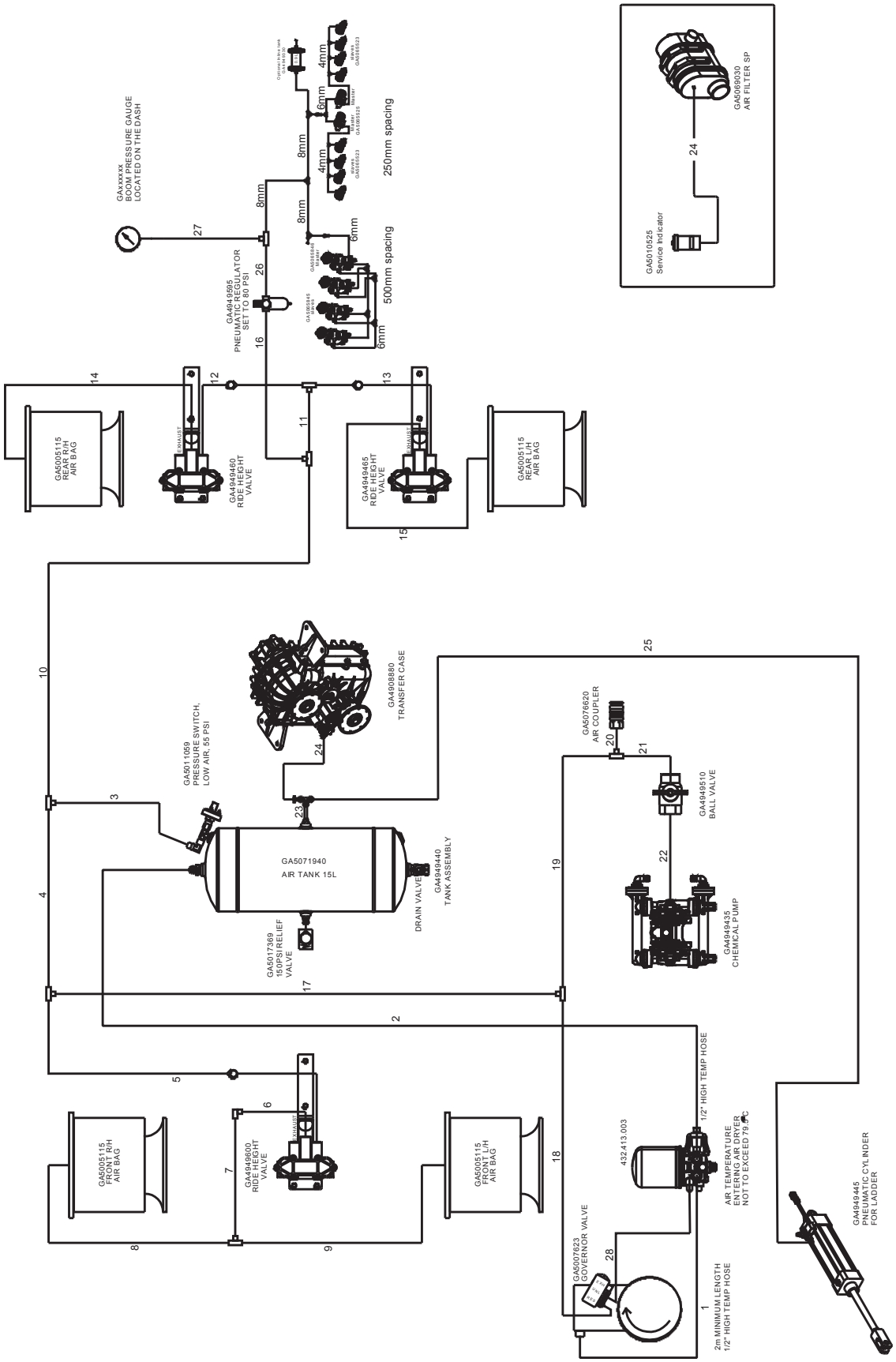

Pneumatic Schematic - Chassis Hose List

HOSE NO.	HOSE SIZE	LENGTH	END FITTING	END FITTING	DESCRIPTION	QTY
1	1/2" BLUE	2000mm	GA3500417	GA3500415	AIR FEED FROM COMPRESSOR TO AIR DRYER (PORT 1)	1
2	1/2" BLUE	3500mm	GA3500412	GA3500415	AIR DRYER (PORT 21) TO TANK	1
3	3/8" BLACK	160mm	GA5078519	GA5078516	TANK TO TEE	1
4	3/8" BLACK	1000mm	GA5078516	GA5078516	TEE TO TEE	1
5	3/8" BLACK	1800mm	GA5078516	GA5078523	TEE TO FRONT RIDE HEIGHT VALVE (SUPPLY)	1
6	3/8" BLACK	115mm	GA5078523	GA5078526	FRONT RIDE HEIGHT (AIRBAG) VALVE TO ELBOW	1
7	3/8" BLACK	115mm	GA5078526	GA5078516	ELBOW TO TEE	1
8	3/8" BLACK	850mm	GA5078516	GA5078518	TEE TO AIRBAG FRONT R/H	1
9	3/8" BLACK	850mm	GA5078516	GA5078518	TEE TO AIRBAG FRONT L/H	1
10	3/8" BLACK	2500mm	GA5078516	GA5078516	TEE TO TEE	1
11	3/8" BLACK	100mm	GA5078516	GA5078516	TEE TO TEE	1
12	3/8" BLACK	600mm	GA5078516	GA5078525	TEE TO REAR RIDE HEIGHT VALVE R/H (SUPPLY)	1
13	3/8" BLACK	1030mm	GA5078516	GA5078525	TEE TO REAR RIDE HEIGHT VALVE L/H (SUPPLY)	1
14	3/8" BLACK	700mm	GA5078525	GA5078518	REAR RIDE HEIGHT VALVE R/H (AIRBAG) TO AIRBAG REAR R/H	1
15	3/8" BLACK	700mm	GA5078525	GA5078518	REAR RIDE HEIGHT VALVE L/H (AIRBAG) TO AIRBAG REAR L/H	1
16	3/8" BLACK	3300mm	GA5078516	GA5078517	TEE TO AIR FILTER / REGULATOR	1
17	3/8" BLACK	670mm	GA5078516	GA5078516	TEE TO TEE	1
18	3/8" BLACK	2600mm	GA5078516	GA5078525	TEE TO GOVERNOR VALVE (RES PORT)	1
19	3/8" BLACK	1400mm	GA5078516	GA5078516	TEE TO TEE	1
20	3/8" BLACK	370mm	GA5078516	GA5078518	TEE TO AIR COUPLER	1
21	3/8" BLACK	350mm	GA5078516	GA5078524	TEE TO BALL VALVE	1
22	3/8" BLACK	270mm	GA5078524	GA5078524	BALL VALVE TO CHEMICAL PUMP	1
23	6mm BLACK	40mm	GA5045140	GA5016245	TANK TO TEE	1
24	6mm BLACK	250mm	GA5016245	GA5045145	TEE TO MAC VALVE (TRANSFER CASE)	1
25	6mm BLACK	5000mm	GA5016245	GA7000013	TEE TO MAC VALVE (LADDER)	1
26	8mm BLACK	90mm	GA5052690	GA5067010	AIR REGULATOR TO TEE	1
27	8mm BLACK	10000mm	GA5067010		TEE TO BOOM PRESSURE GUAGE	1
28	3/8" BLACK	1350mm	GA5078517	GA5078525	AIR DRYER PORT 4 TO GOVERNOR VALVE (UNL)	1

Fuel Line Schematic

Hose No.	Part No.	Description	Size	Length	QTY
1		Fuel Hose, Injector Pump Return to Cooler	$\frac{5}{16}$"	2500mm	1
2		Fuel Hose, Cooler To Tank Return	$\frac{5}{16}$"	1500mm	1
3	Cummins	Fuel Hose, Primary Filter to Injector Pump	$\frac{5}{16}$"	N/A	1
4	Cummins	Fuel Hose, Injector Pump To Engine Filter	$\frac{5}{16}$"	N/A	1
5	Cummins	Fuel Hose,Engine Filter To Rail Supply	$\frac{5}{16}$"	N/A	1
6		Fuel Hose, Inline Filter To Primary Filter	$\frac{3}{8}$"	400mm	1
7		Fuel Hose, Tank To Inline filter	$\frac{3}{8}$"	1500mm	1

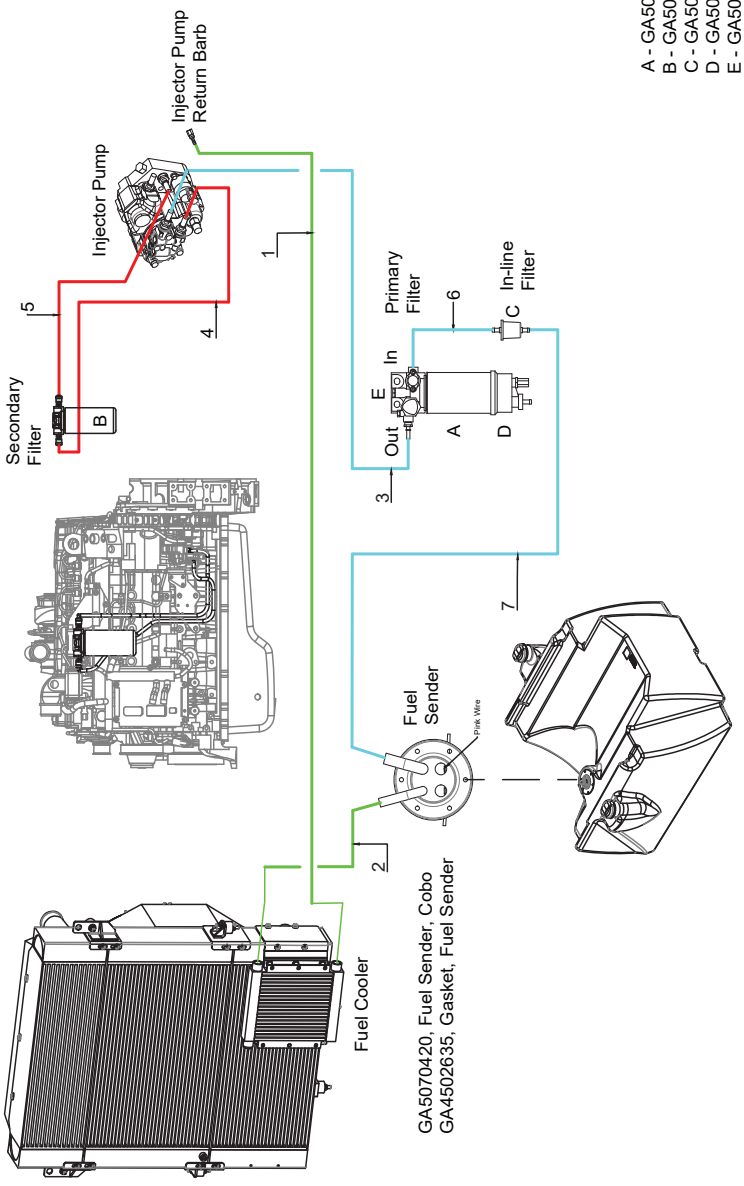

A - GA5051760, Filter Cartridge Primary (FS1242)
B - GA5051765, Filter Cartridge Secondary (FF6512, FF5421)
C - GA5069895, Fuel Filter, Inline (WZ153)
D - GA5070560, Glass Bowl (without W.I.F sensor)
E - GA5069770, Filter Lift Pump Head Only

GA7500101 GOLDACRES SCHEMATIC, FUEL SYSTEM, G6 MY20 REV 01

Electrical Schematic - Raven Hawkeye

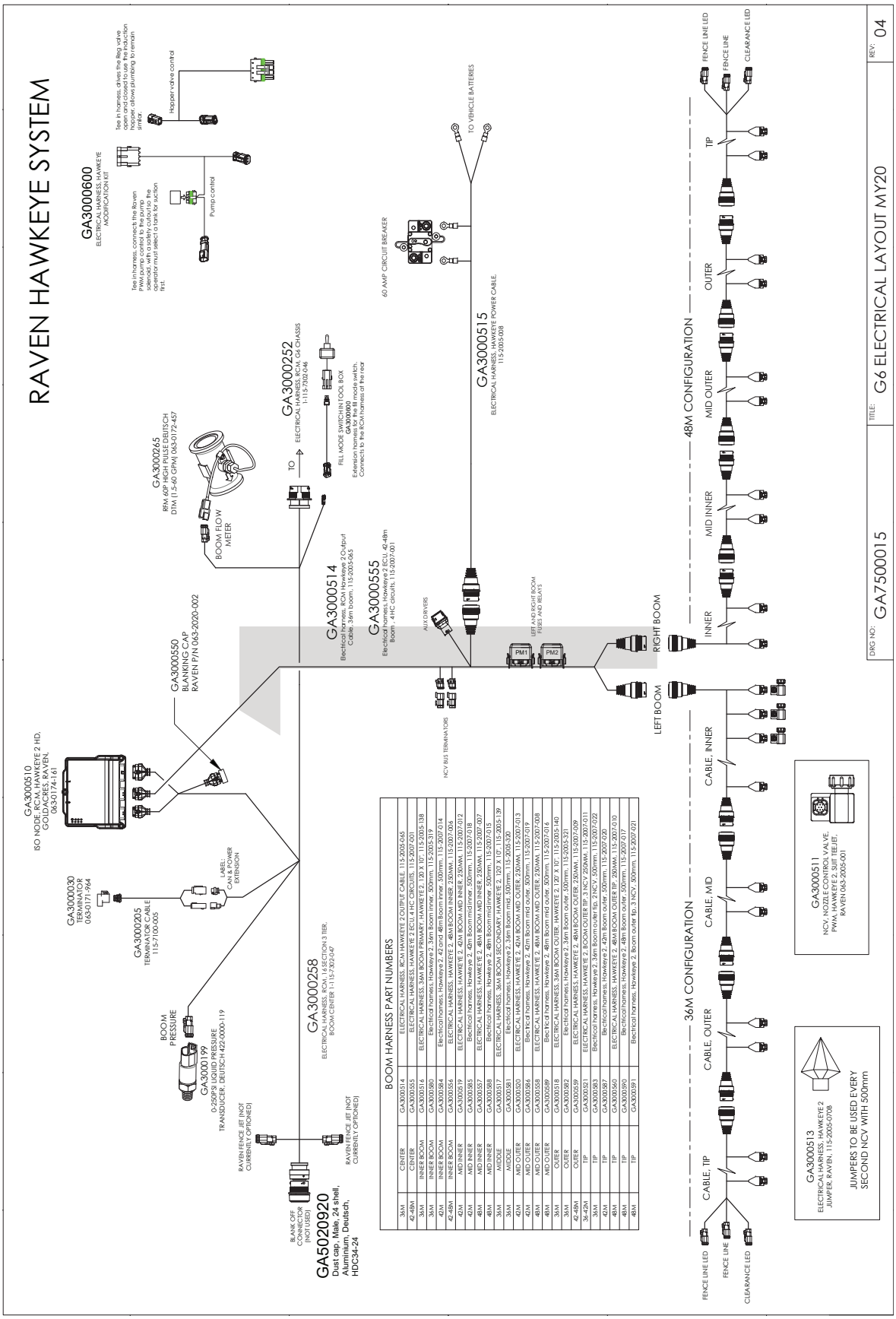

36M	CENTER	GA3000314	ELECTRICAL HARNESS, RCM HAWKEYE 2 OUTPUT CABLE, 115-2005-065
42-48M	CENTER	GA3000555	ELECTRICAL HARNESS, HAWKEYE 2 ECU, 4 HC CIRCUITS, 115-2007-001
36M	INNER BOOM	GA3000316	ELECTRICAL HARNESS, 36M BOOM PRIMARY, HAWKEYE 2, 120 X 10", 115-2005-138
36M	INNER BOOM	GA3000380	Electrical harness, Hawkeye 2, 3.6m Boom inner, 500mm, 115-2005-319
42M	INNER BOOM	GA3000384	Electrical harness, Hawkeye 2, 42 and 48m Boom inner, 500mm, 115-2007-014
42-48M	INNER BOOM	GA3000356	ELECTRICAL HARNESS, HAWKEYE 2, 48M BOOM INNER, 250MM, 115-2007-006
42M	MID INNER	GA3000619	ELECTRICAL HARNESS, HAWKEYE 2, 42M BOOM MID INNER, 250MM, 115-2007-012
42M	MID INNER	GA3000383	Electrical harness, Hawkeye 2, 42m Boom mid inner, 500mm, 115-2007-018
48M	MID INNER	GA3000357	Electrical harness, Hawkeye 2, 48m Boom mid inner, 500mm, 115-2007-007
36M	MID INNER	GA3000385	Electrical harness, Hawkeye 2, 48m Boom mid inner, 500mm, 115-2007-015
36M	MIDDLE	GA3000317	ELECTRICAL HARNESS, 36M BOOM SECONDARY, HAWKEYE 2, 120 X 10", 115-2005-139
36M	MIDDLE	GA3000381	Electrical harness, Hawkeye 2, 3.6m Boom mid, 500mm, 115-2005-320
42M	MID OUTER	GA3000350	ELECTRICAL HARNESS, HAWKEYE 2, 42M BOOM MID OUTER, 250MM, 115-2007-013
42M	MID OUTER	GA3000386	Electrical harness, Hawkeye 2, 42m Boom mid outer, 500mm, 115-2007-019
48M	MID OUTER	GA3000358	ELECTRICAL HARNESS, HAWKEYE 2, 48M BOOM MID OUTER, 250MM, 115-2007-008
48M	MID OUTER	GA3000389	Electrical harness, Hawkeye 2, 48m Boom mid outer, 500mm, 115-2007-016
36M	OUTER	GA3000318	ELECTRICAL HARNESS, 36M BOOM OUTER, HAWKEYE 2, 120 X 10", 115-2005-140
36M	OUTER	GA3000382	Electrical harness, Hawkeye 2, 3.6m Boom outer, 500mm, 115-2005-321
42-48M	OUTER	GA3000359	ELECTRICAL HARNESS, HAWKEYE 2, 48M BOOM OUTER, 250MM, 115-2007-009
36-48M	TIP	GA3000310	ELECTRICAL HARNESS, HAWKEYE 2, 36-48M BOOM OUTER TIP, 250MM, 115-2007-011
36M	TIP	GA3000387	Electrical harness, Hawkeye 2, 3.6m Boom outer tip, 2 NCV, 500mm, 115-2007-022
42M	TIP	GA3000360	ELECTRICAL HARNESS, HAWKEYE 2, 48M BOOM OUTER TIP, 250MM, 115-2007-010
48M	TIP	GA3000390	Electrical harness, Hawkeye 2, 48m Boom outer, 500mm, 115-2007-017
48M	TIP	GA3000391	Electrical harness, Hawkeye 2, Boom outer tip, 3 NCV, 500mm, 115-2007-021

Electrical Schematic - Raven RCM

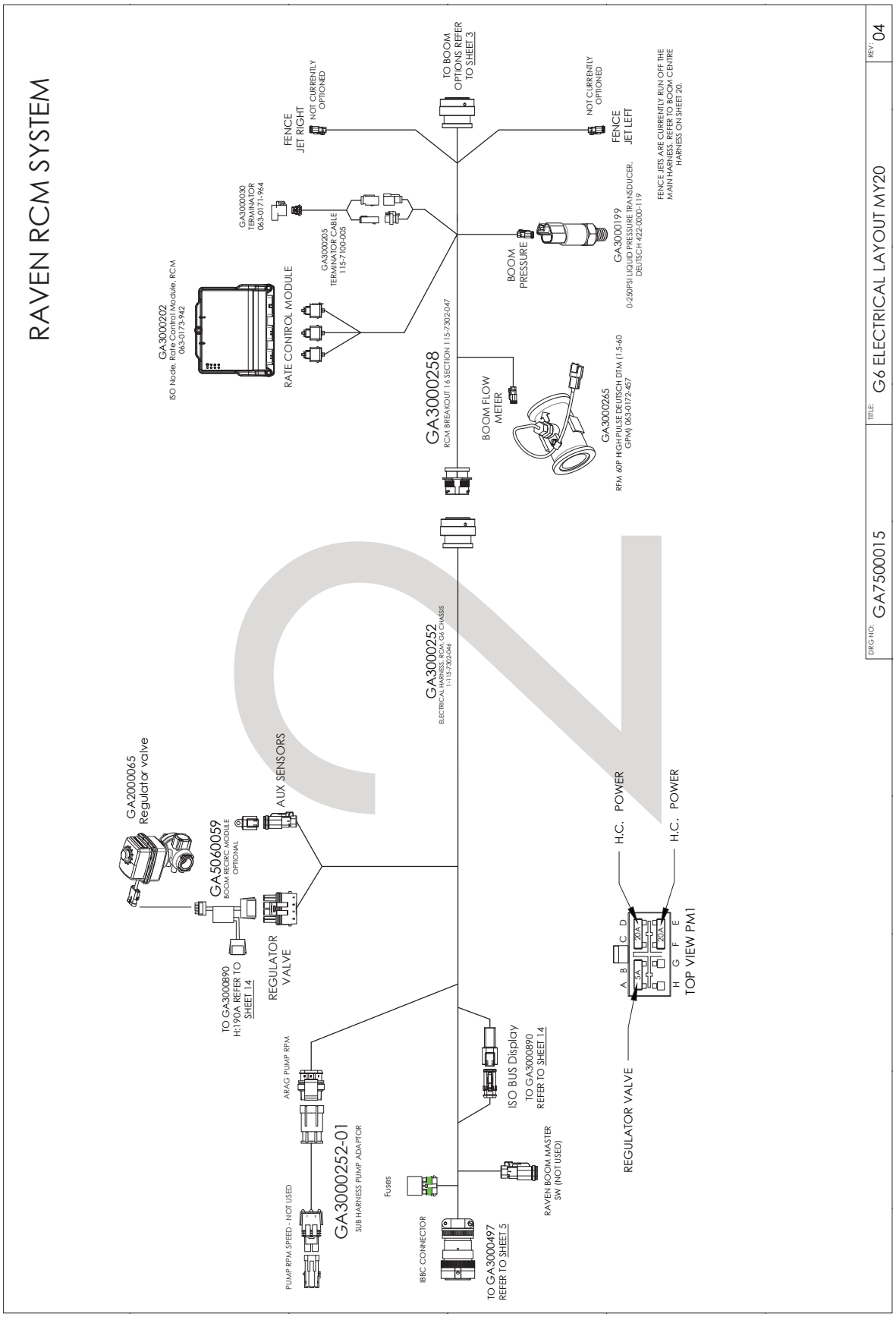

Electrical Schematic - Raven Boom Options

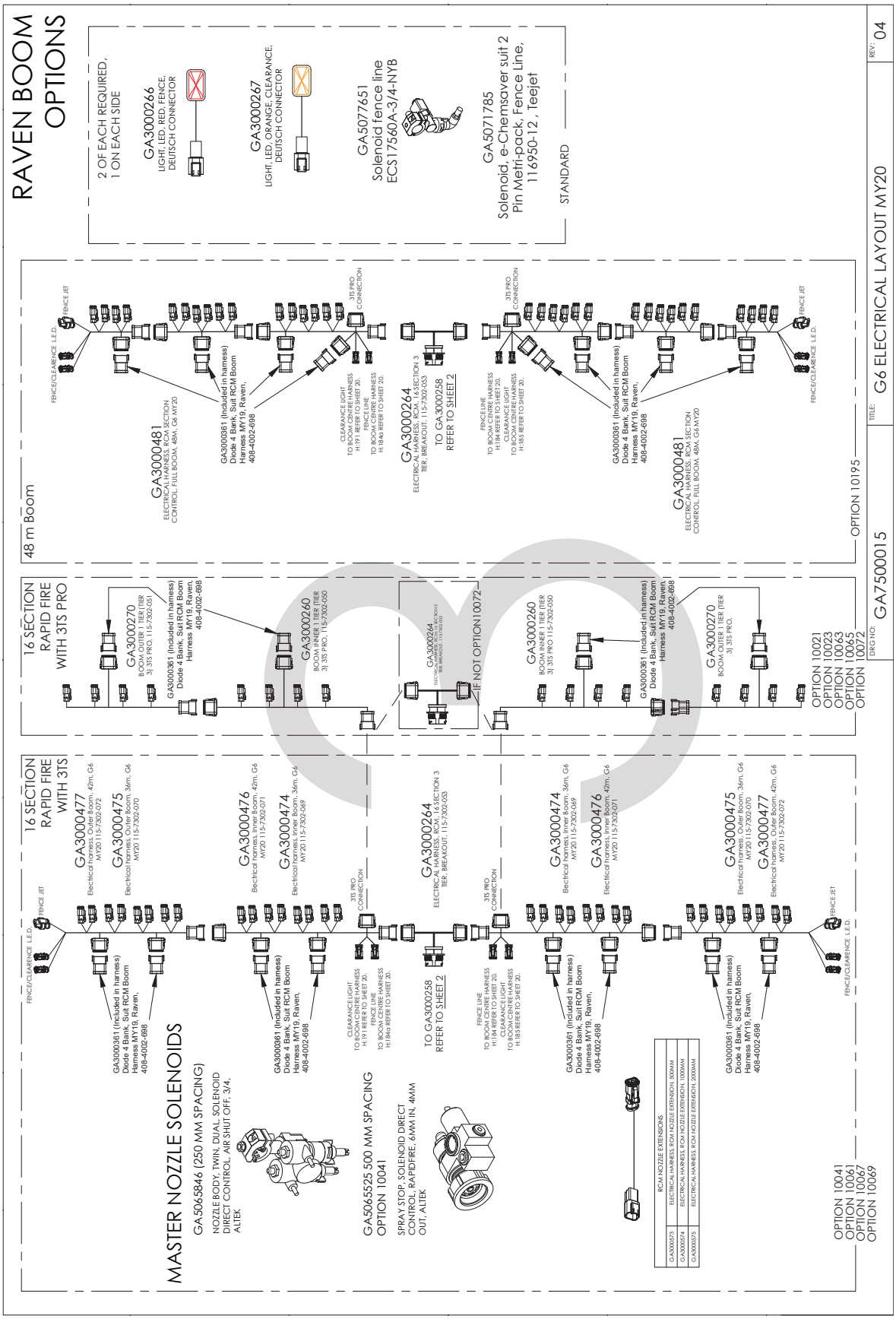

Electrical Schematic - Raven XRT

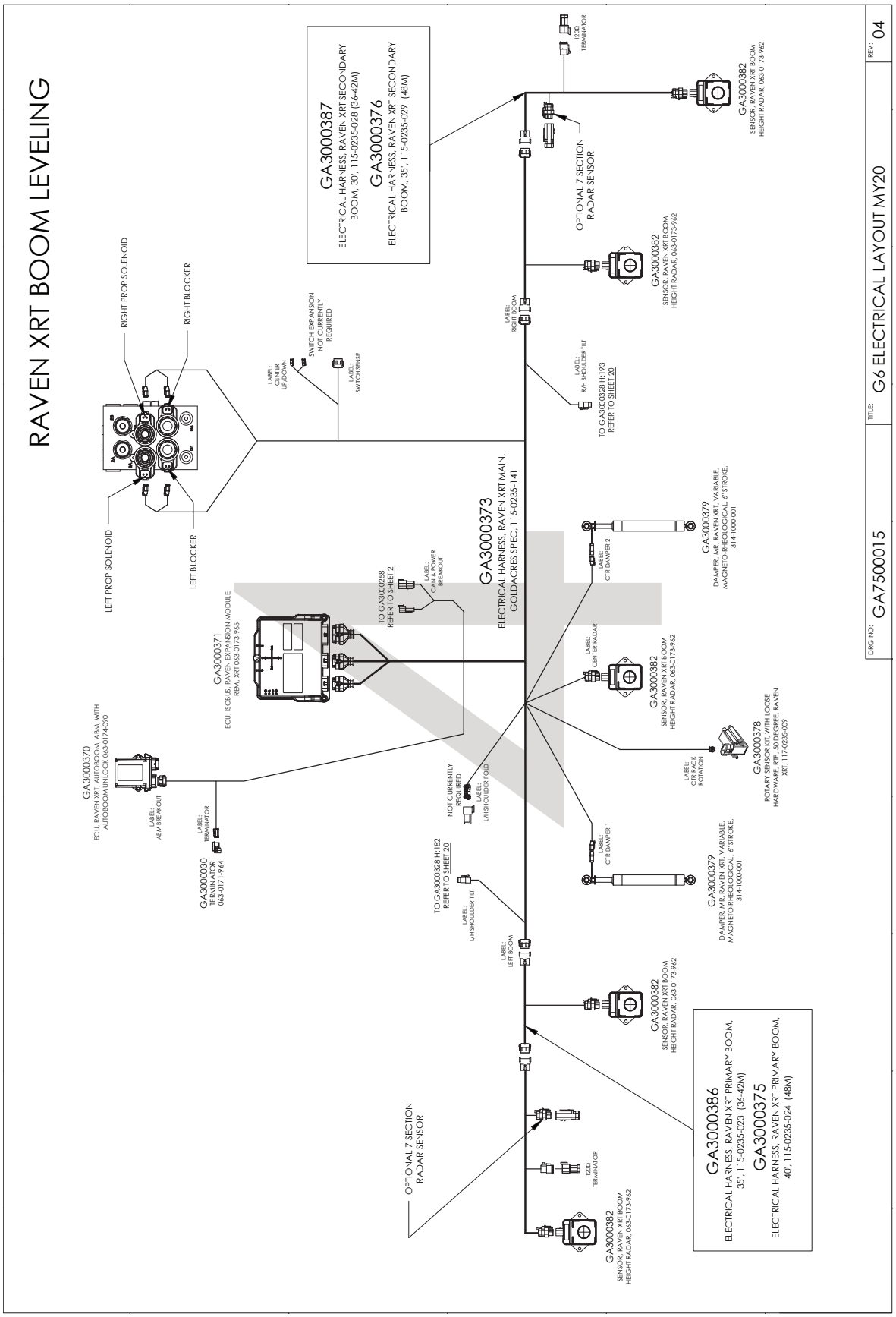

Electrical Schematic - Autosteer

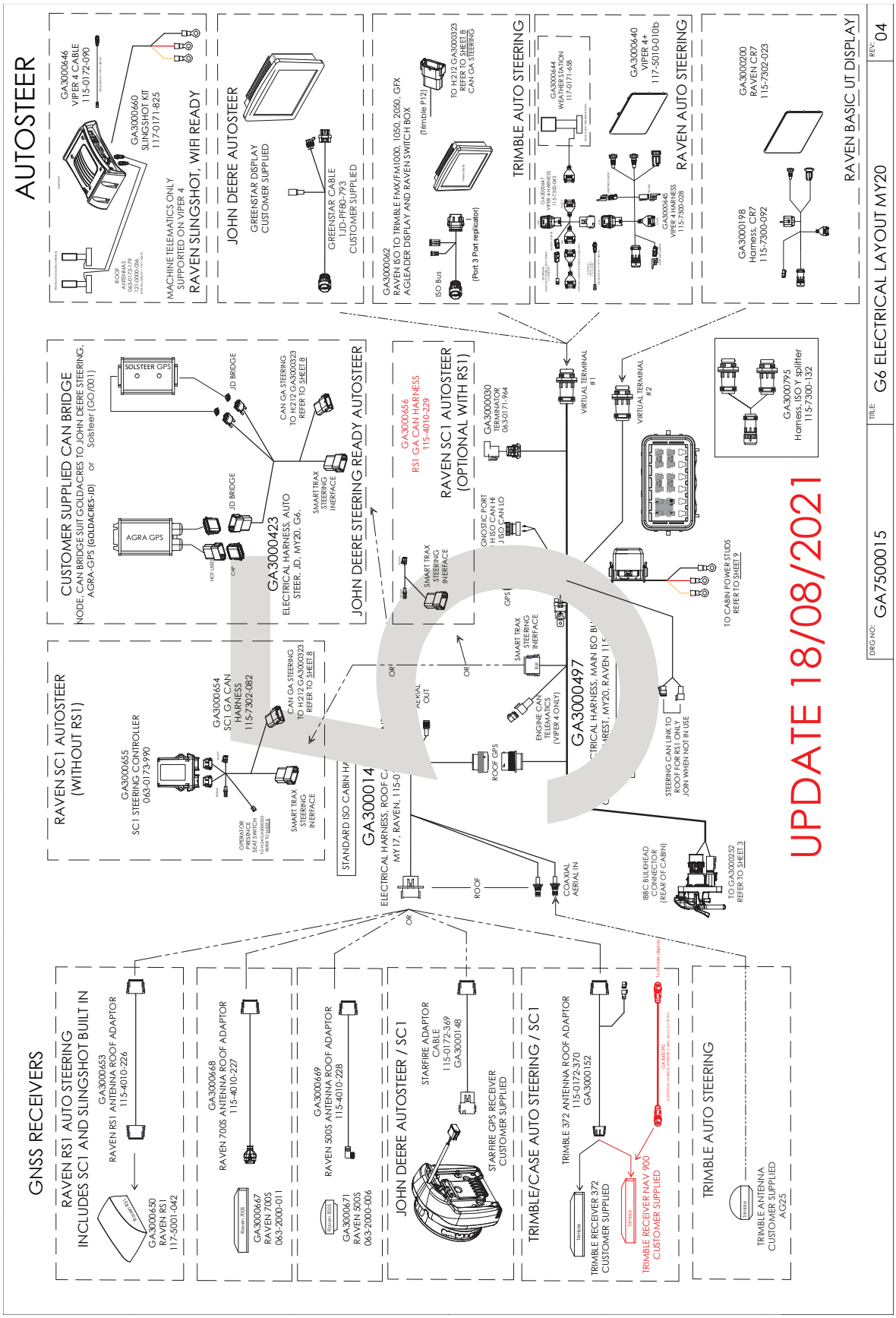

Electrical Schematic - CLAAS Cabin Layout

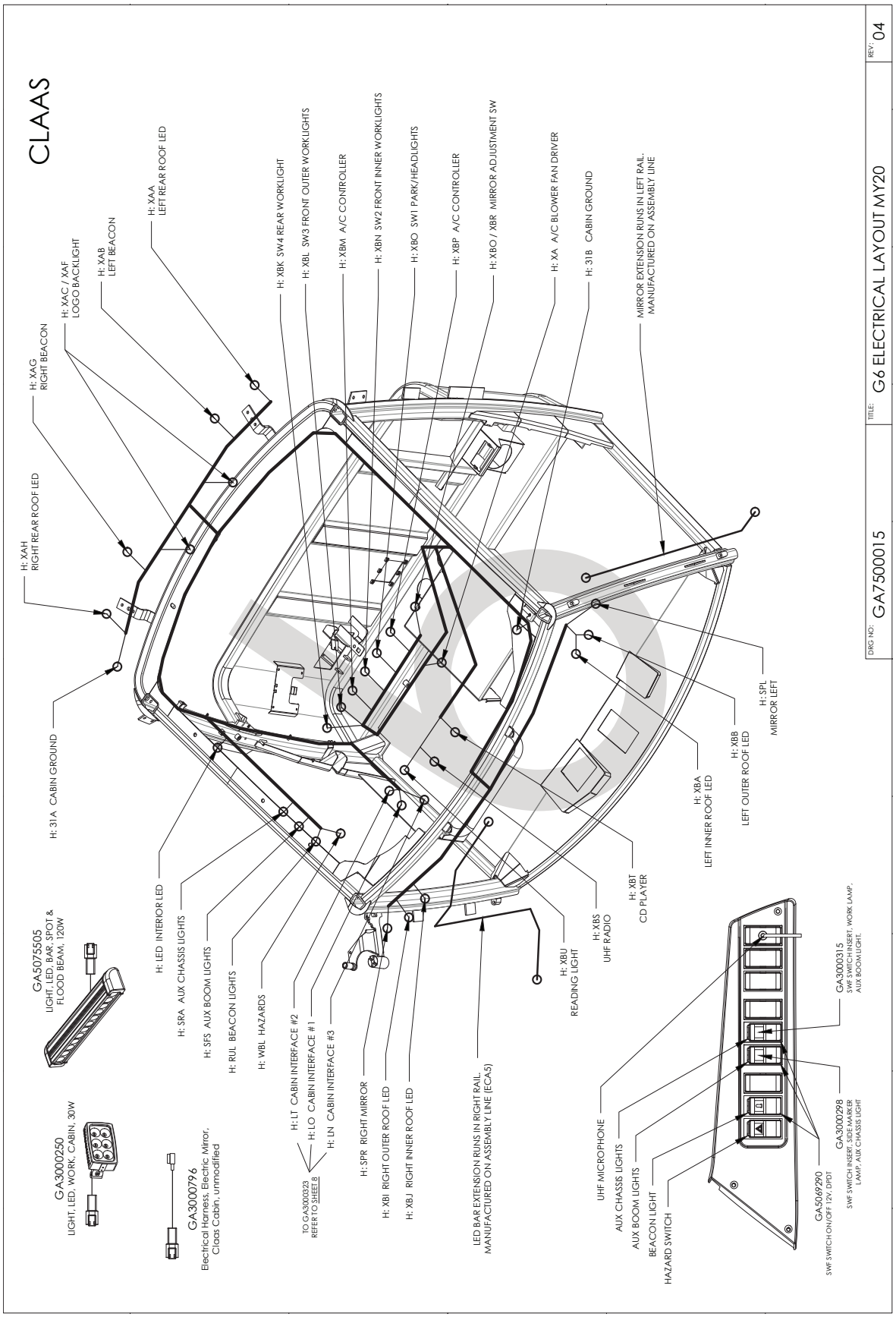

Electrical Schematic - Main Cabin Harness

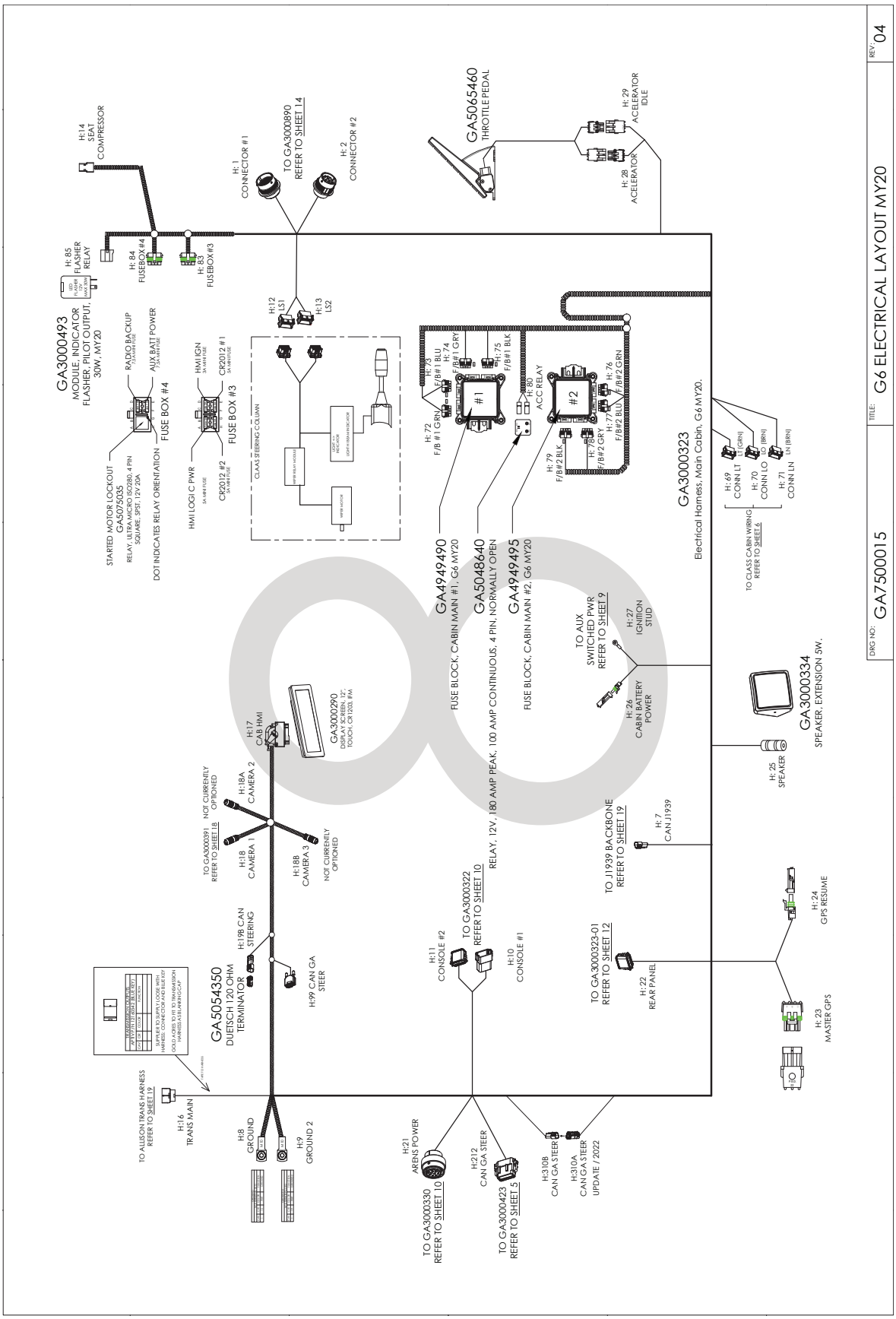

Electrical Schematic - Cabin Fuse Blocks

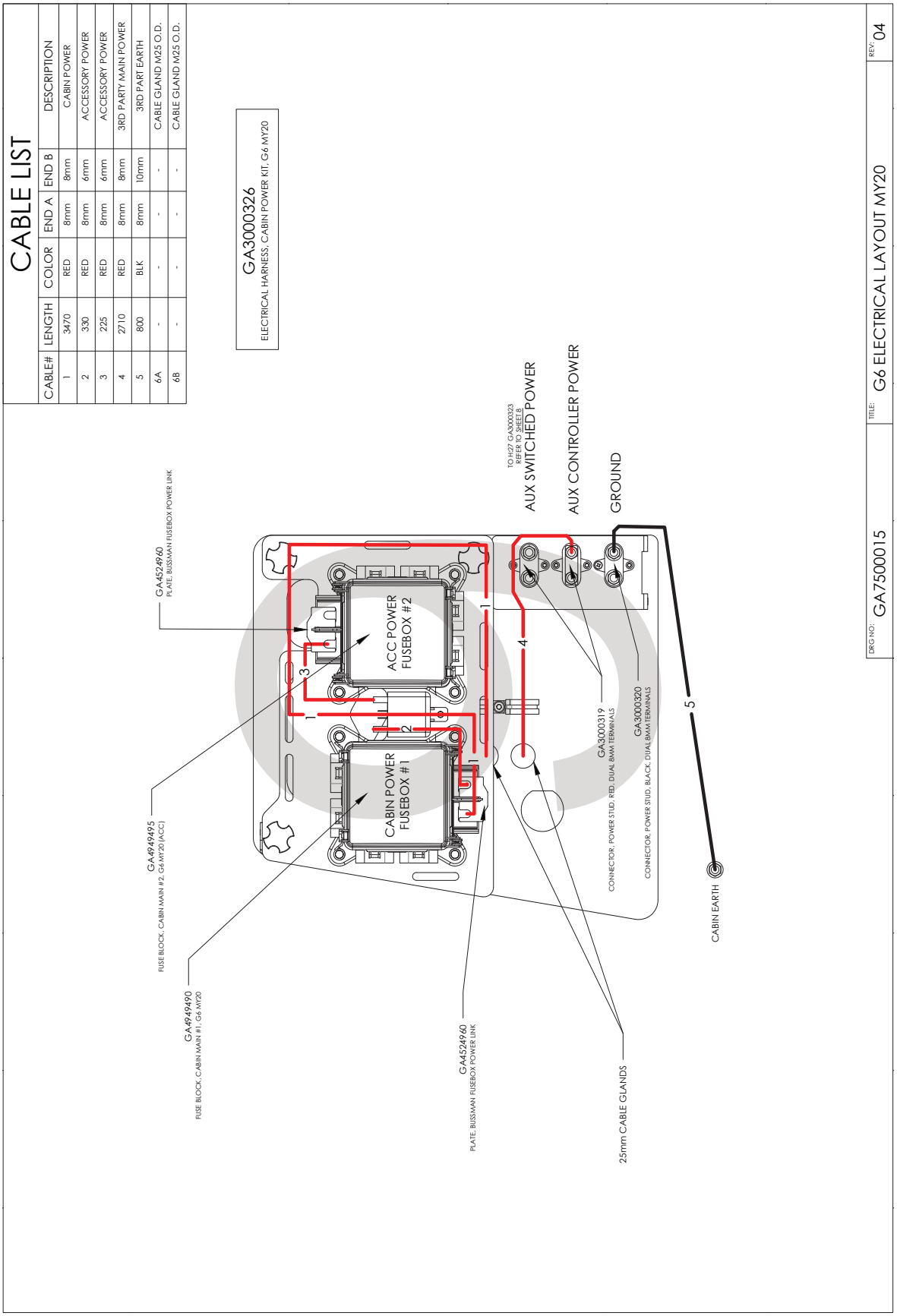

Electrical Schematic - Side Console Harnesses

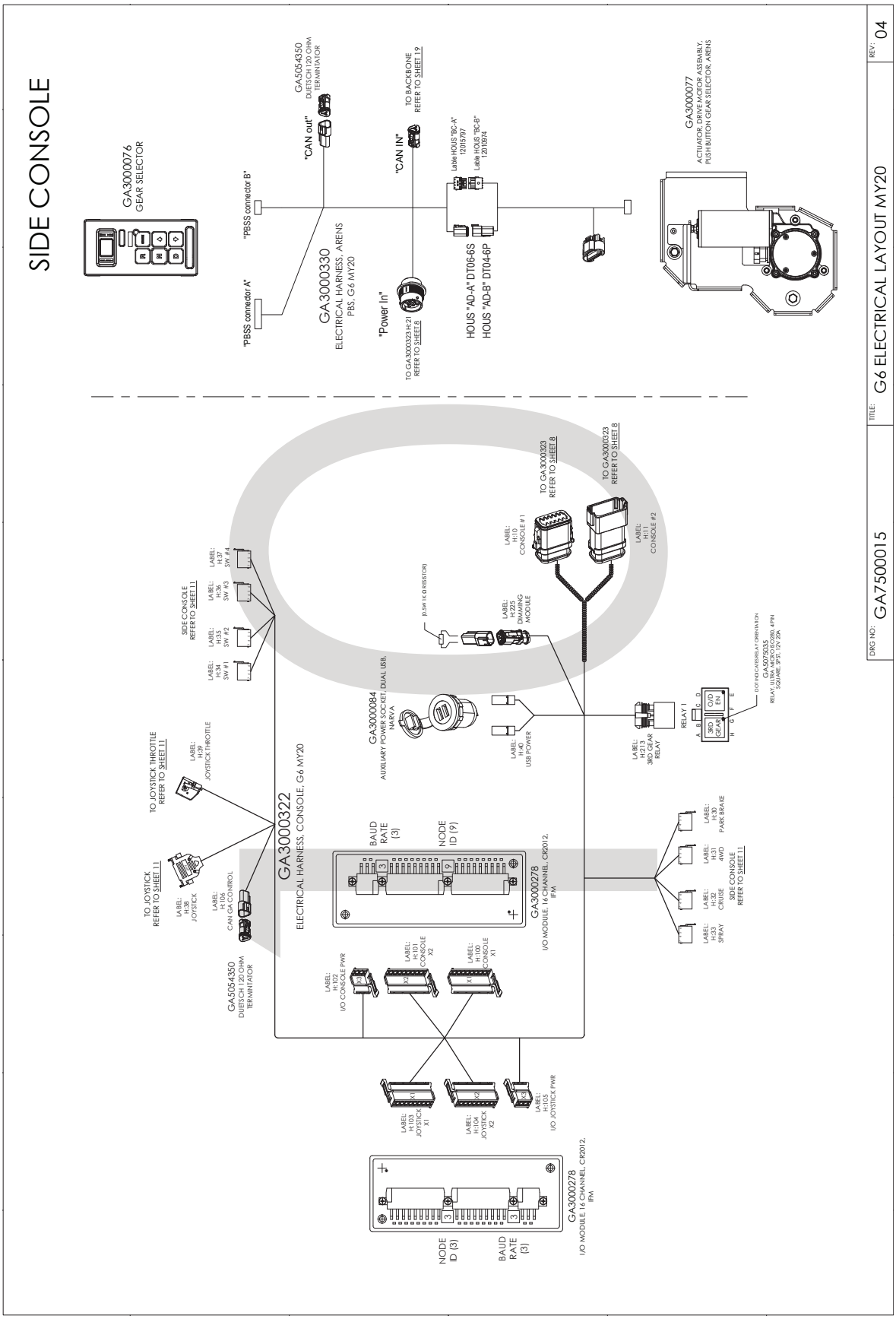

Electrical Schematic - Side Console & Joystick Operations

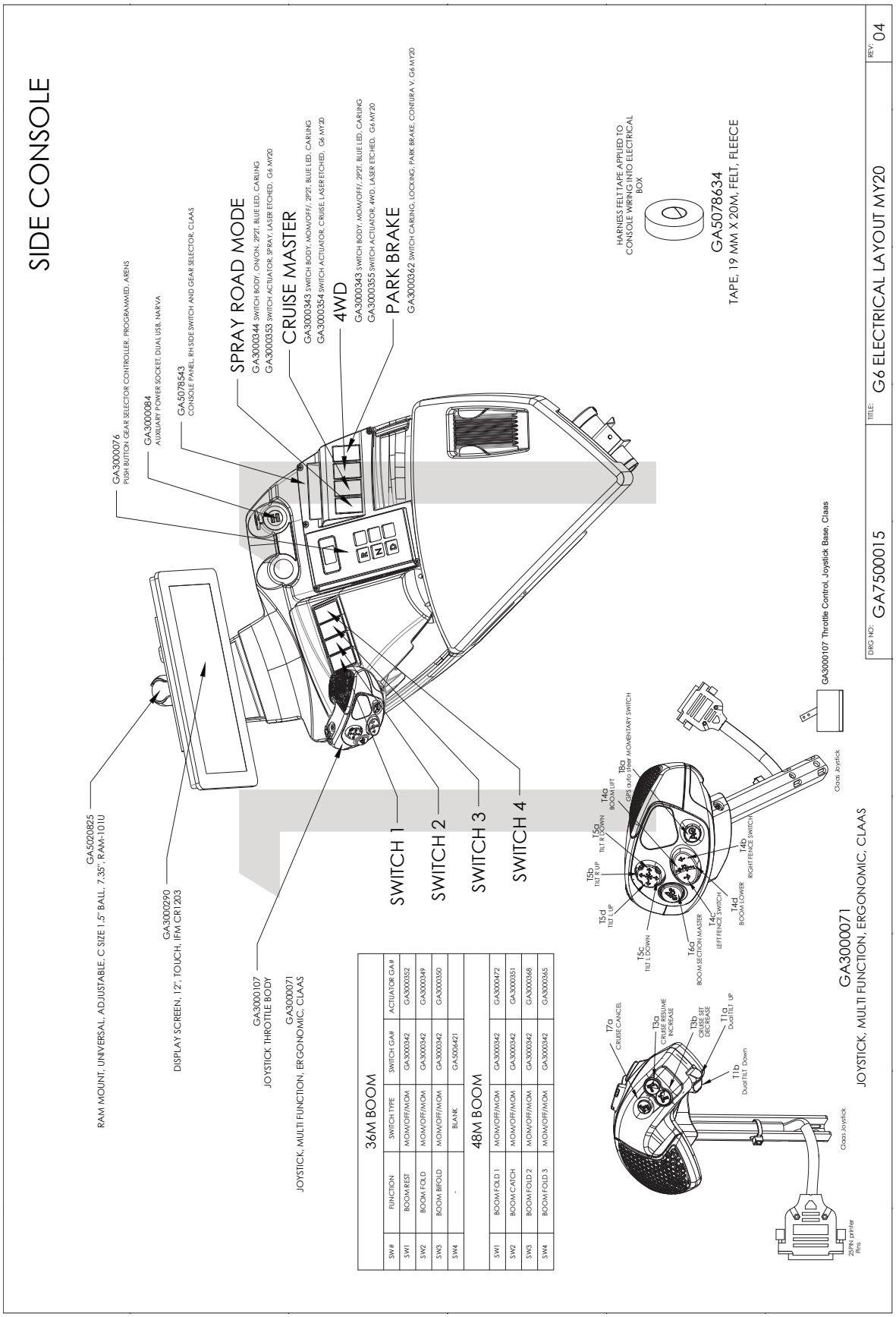

36M BOOM				
SW #	FUNCTION	SWITCH TYPE	SWITCH GA#	ACTUATOR GA#
SW1	BOOM REST	MOM/OFF/MOM	GA3000342	GA3000352
SW2	BOOM FOLD	MOM/OFF/MOM	GA3000342	GA3000349
SW3	BOOM BIFOLD	MOM/OFF/MOM	GA3000342	GA3000350
SW4	-	BLANK	GA5006421	
48M BOOM				
SW1	BOOM FOLD 1	MOM/OFF/MOM	GA3000342	GA3000472
SW2	BOOM CATCH	MOM/OFF/MOM	GA3000342	GA3000351
SW3	BOOM FOLD 2	MOM/OFF/MOM	GA3000342	GA3000348
SW4	BOOM FOLD 3	MOM/OFF/MOM	GA3000342	GA3000365

Electrical Schematic - Rear Panel Layout

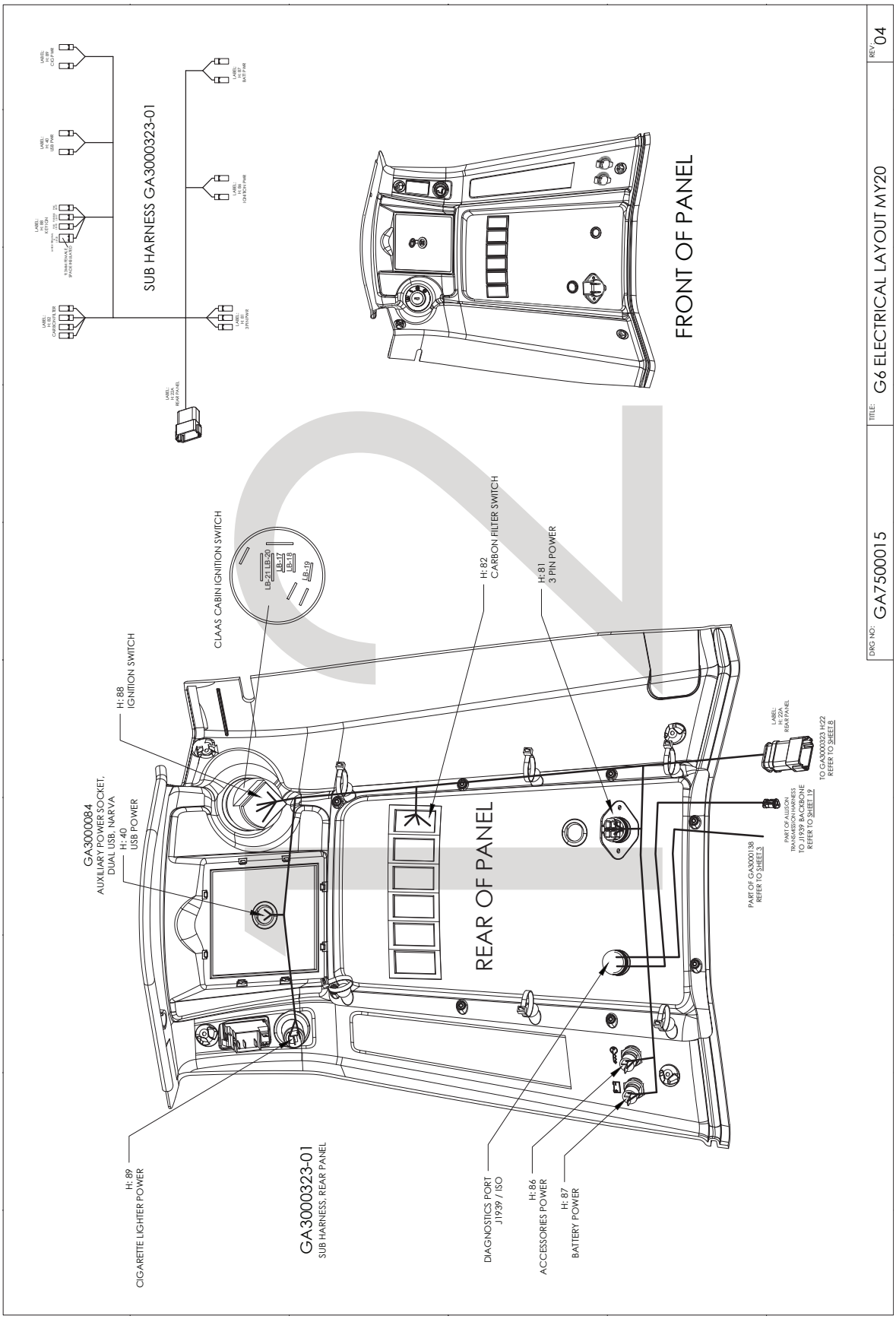

Electrical Schematic - Power Distribution Layout

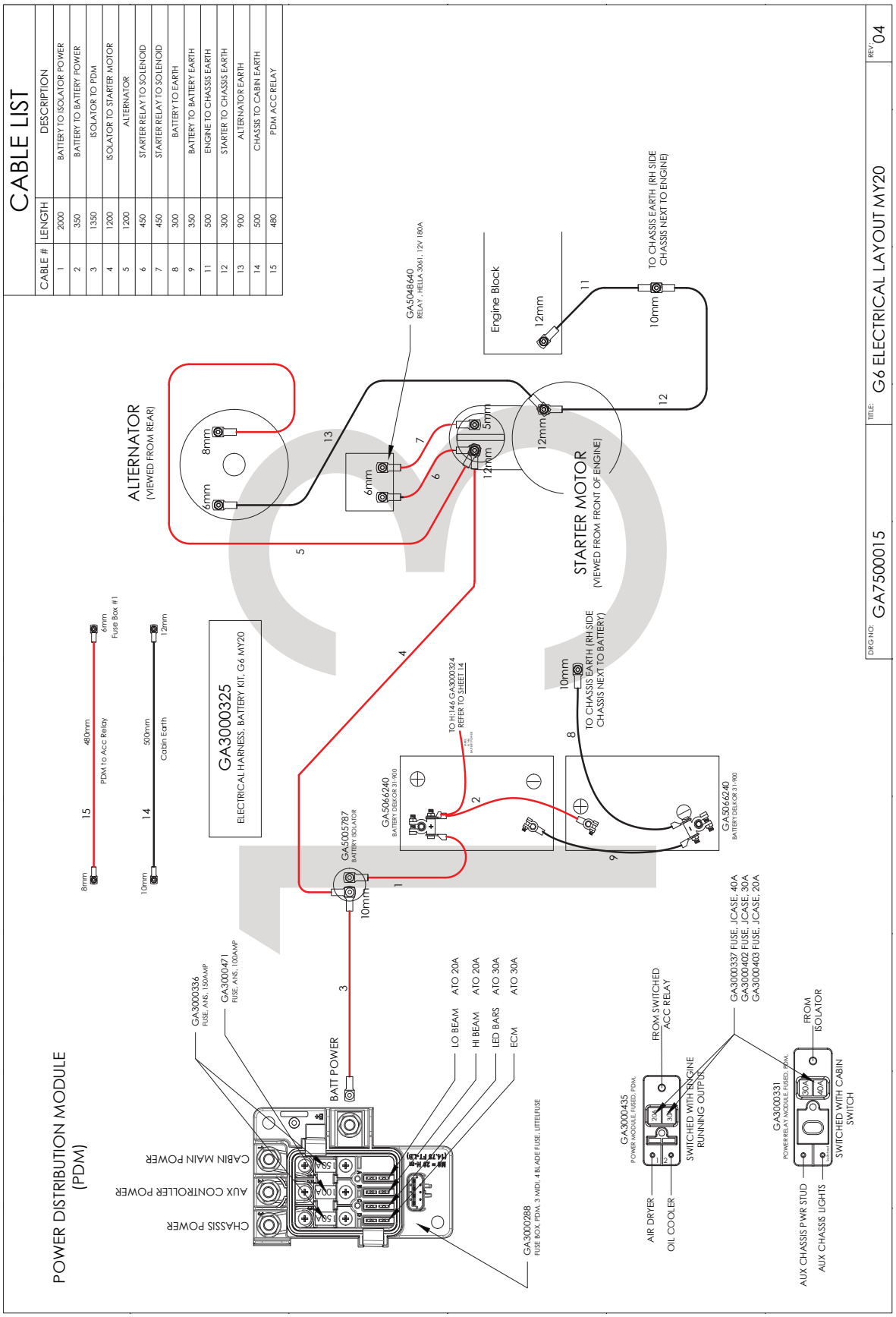

Electrical Schematic - Main Chassis

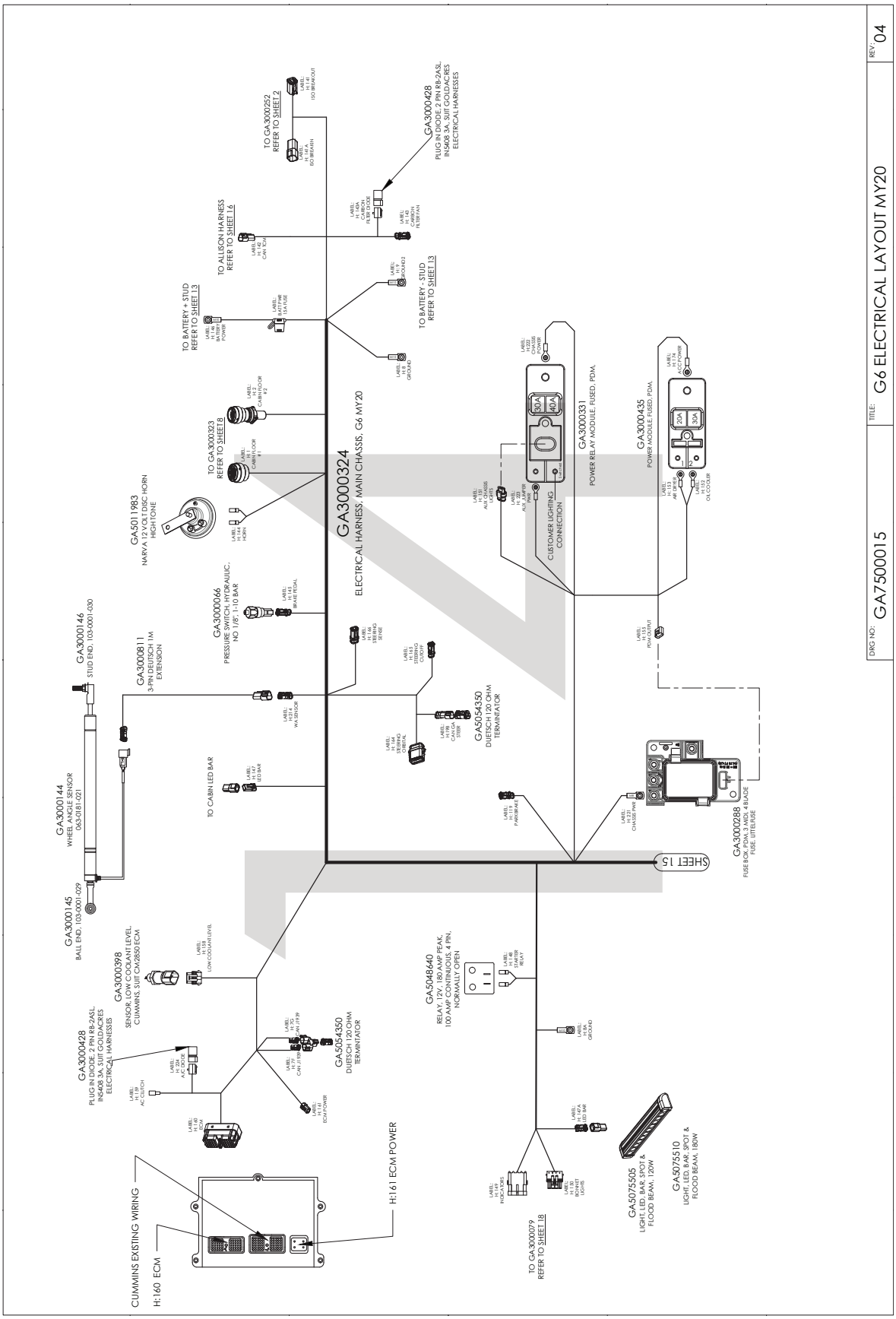

Continue Over Page

Electrical Schematic - Main Chassis

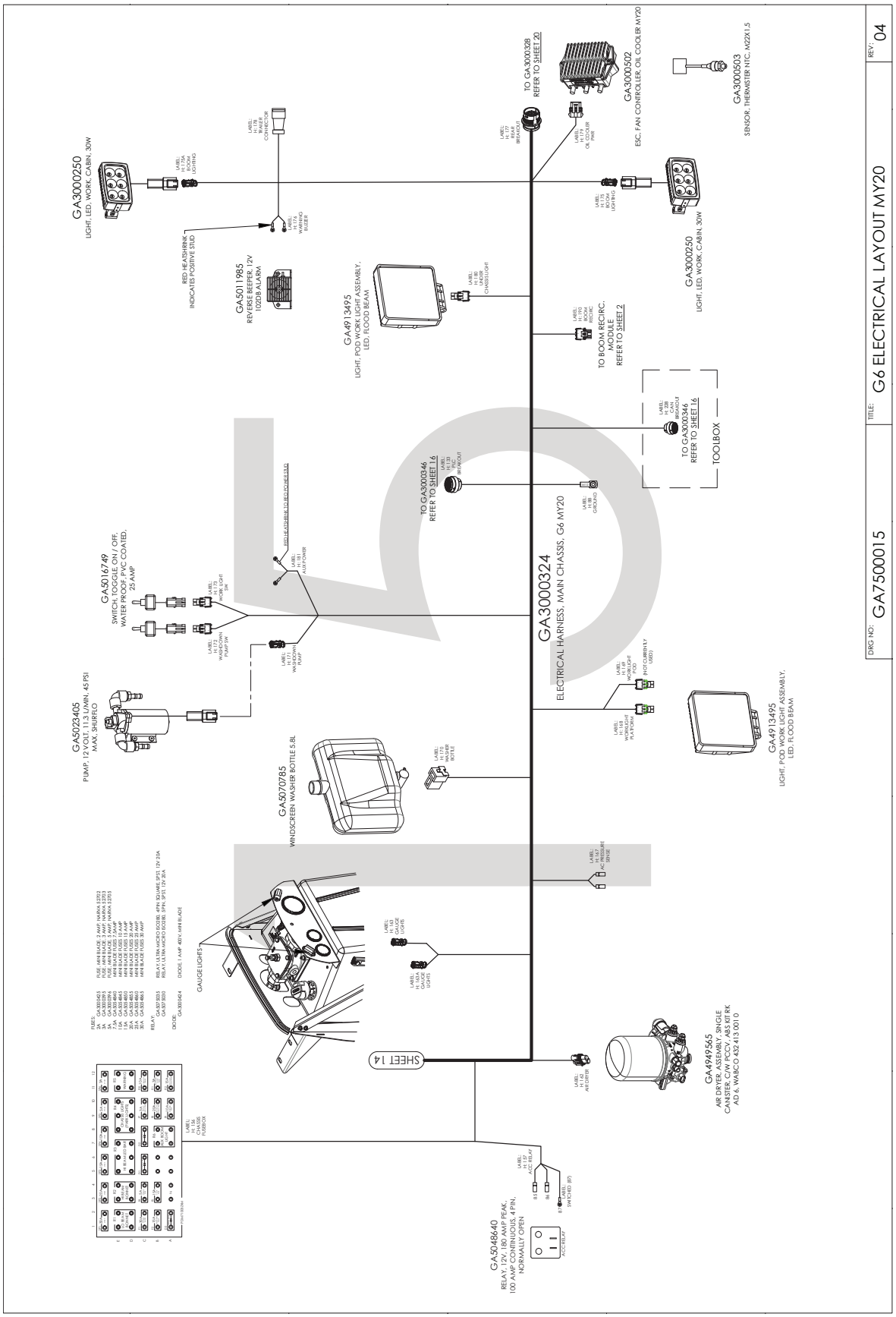

Electrical Schematic - Chassis Hydraulics

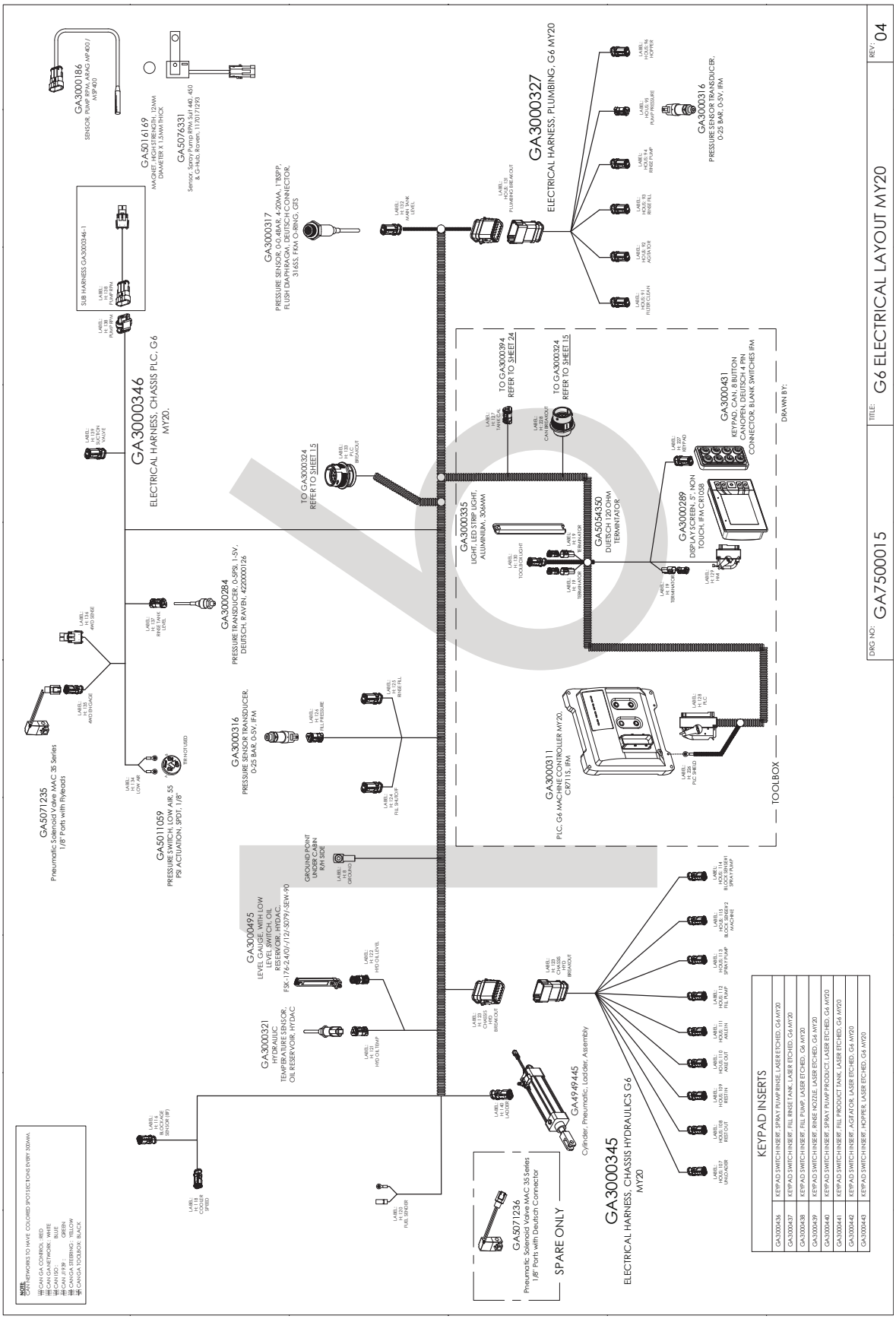

Electrical Schematic - Bonnet Electrical

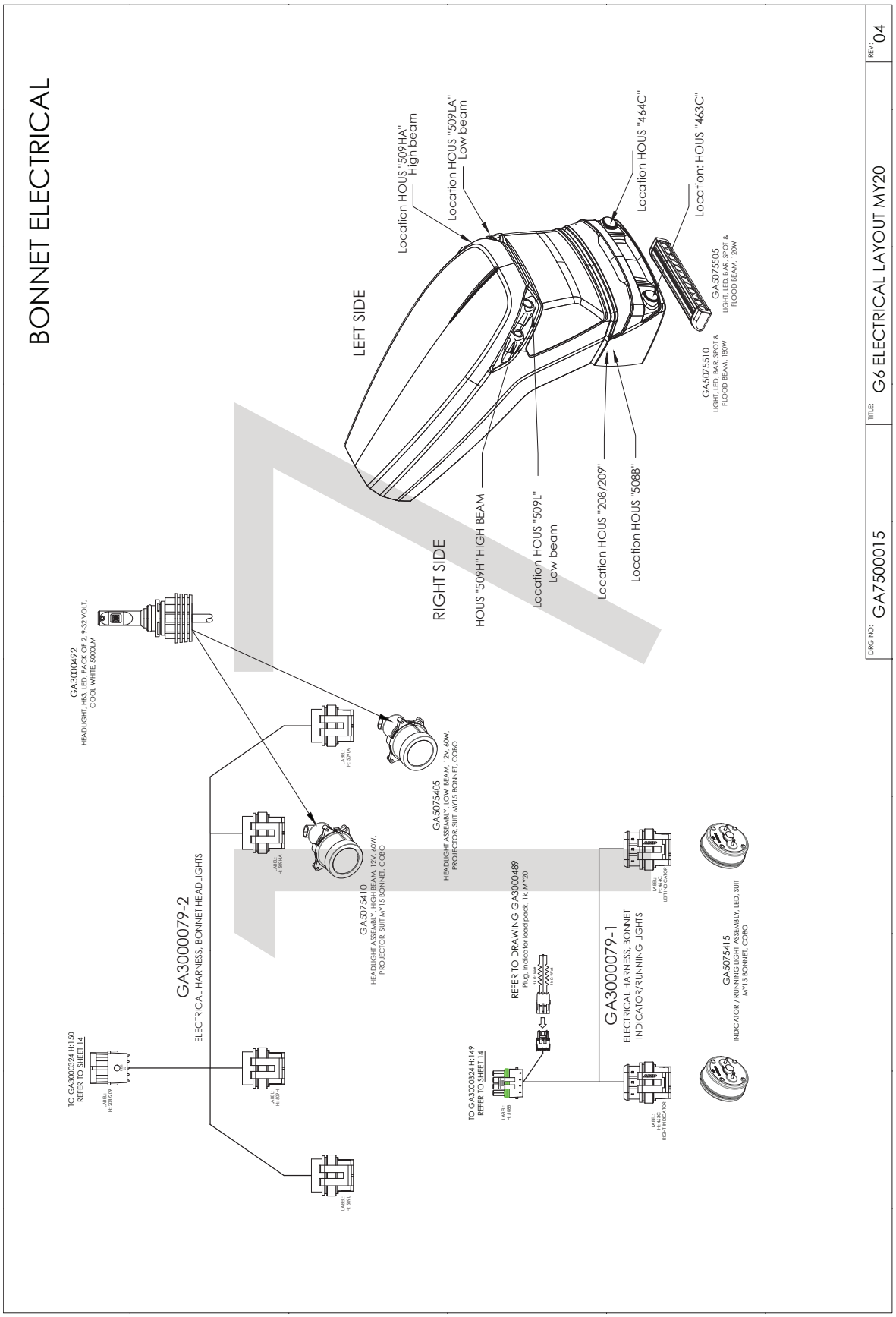

Electrical Schematic - Console & PLC Harnesses

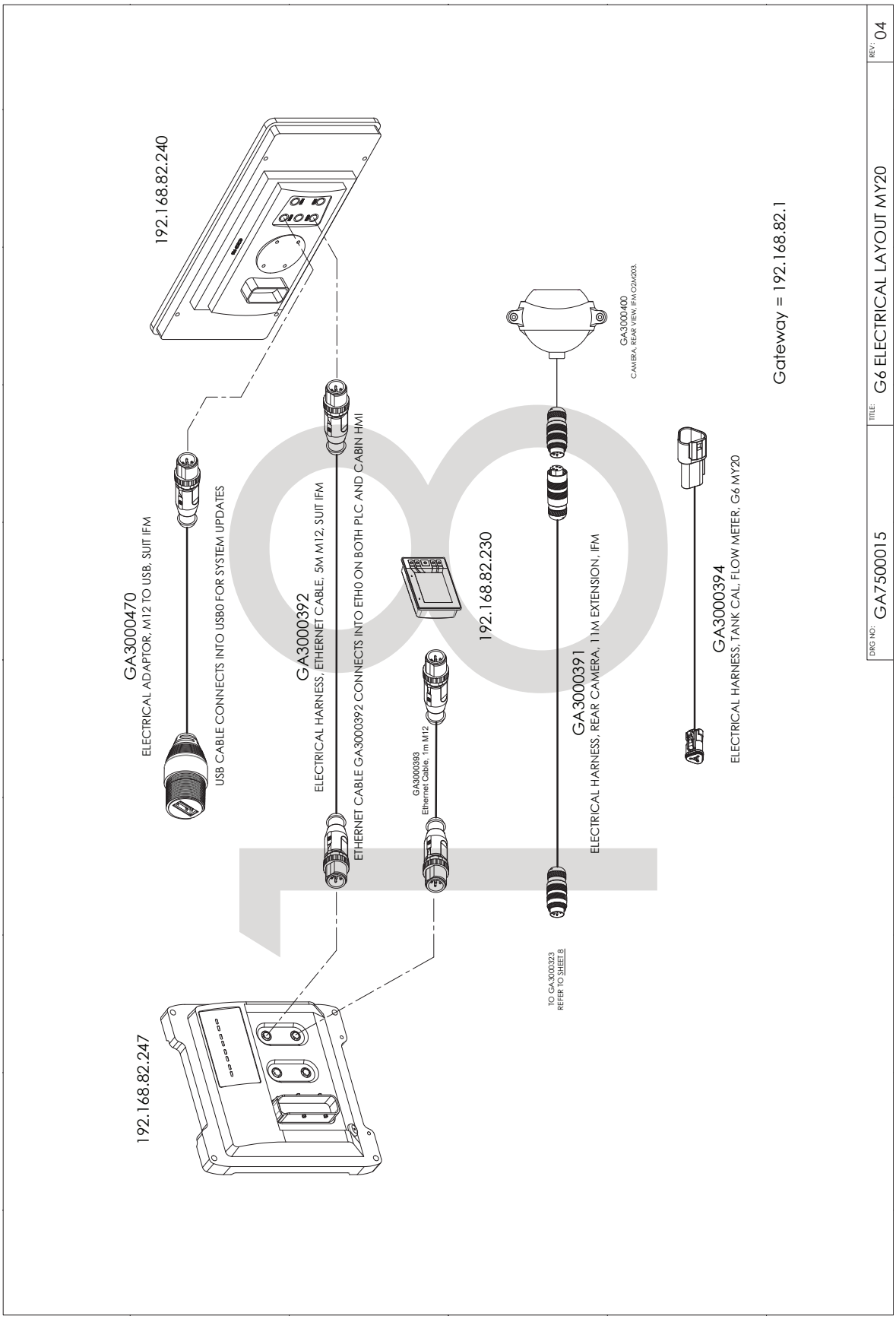

Electrical Schematic - Transmission

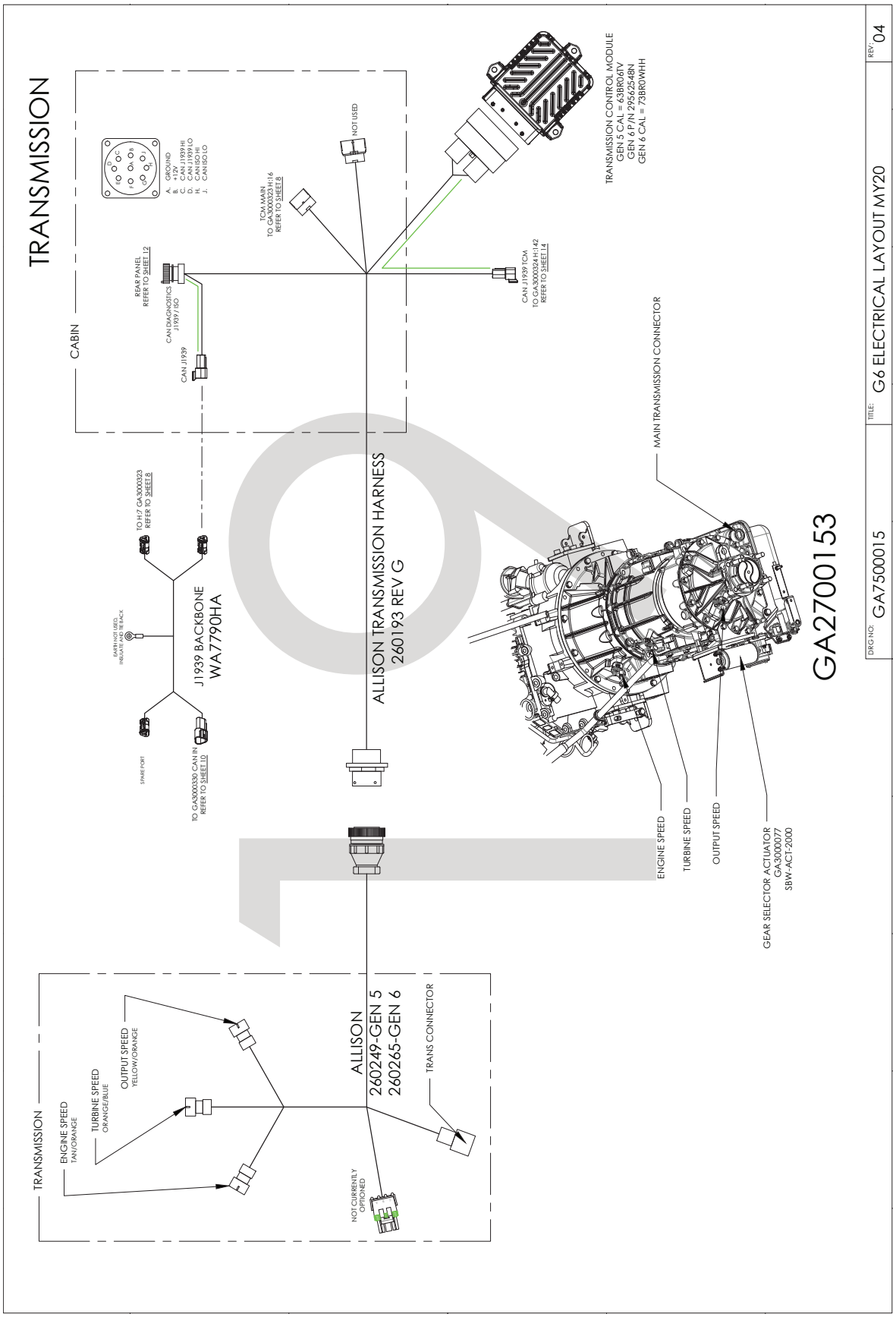

Electrical Schematic - Boom Centre

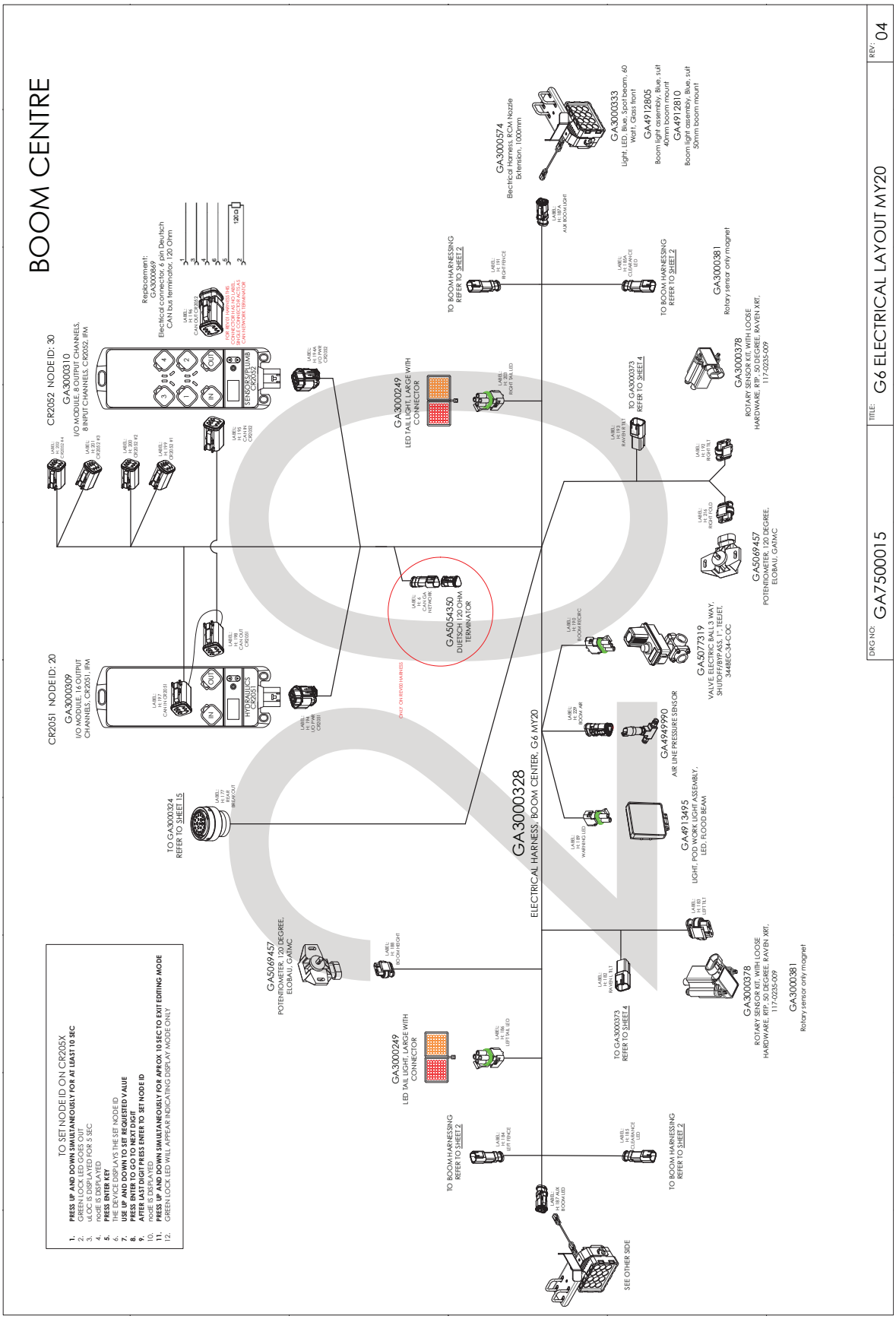

Electrical Schematic - Boom Hydraulics - 36-42m

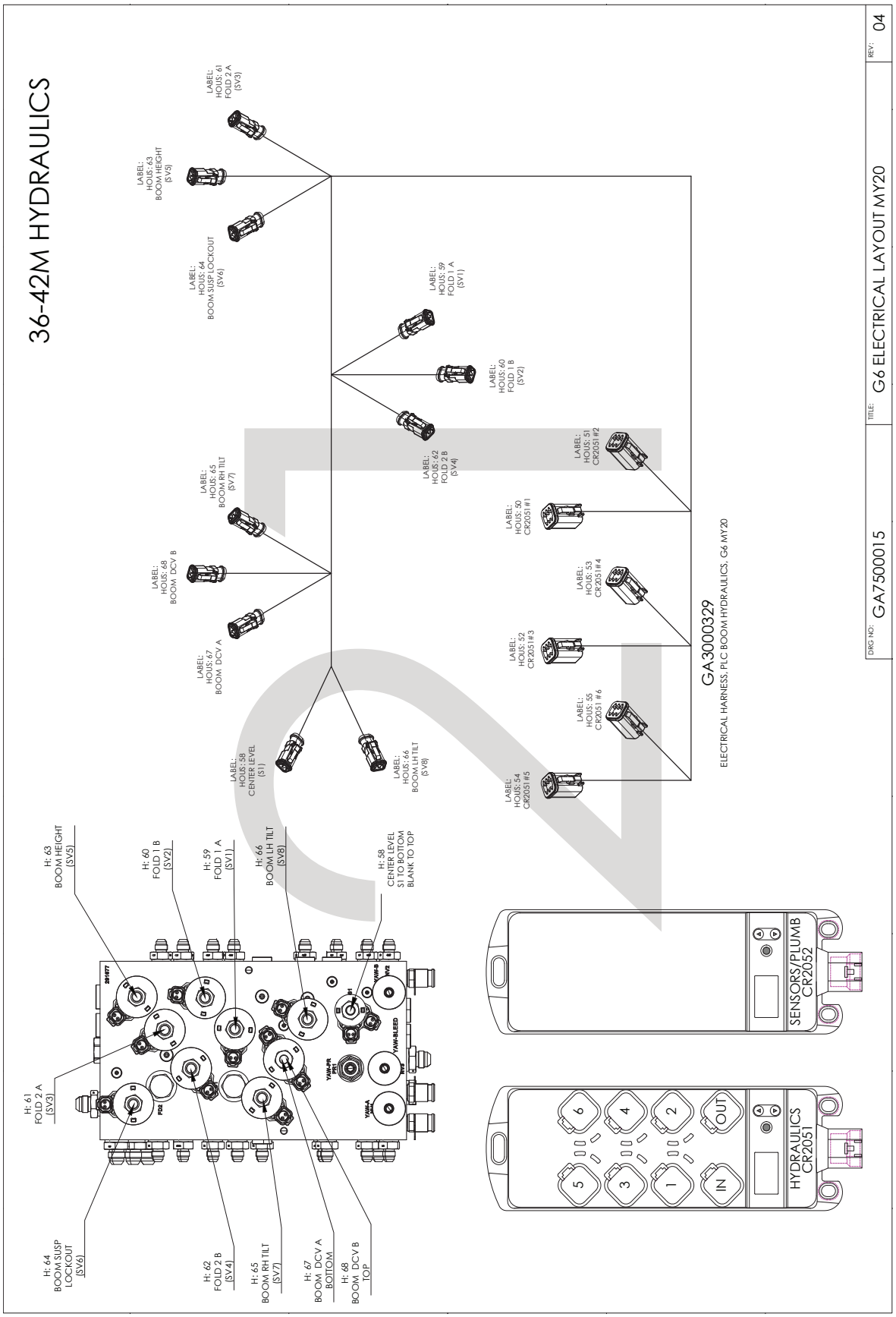

Electrical Schematic - Boom Hydraulics - 48m

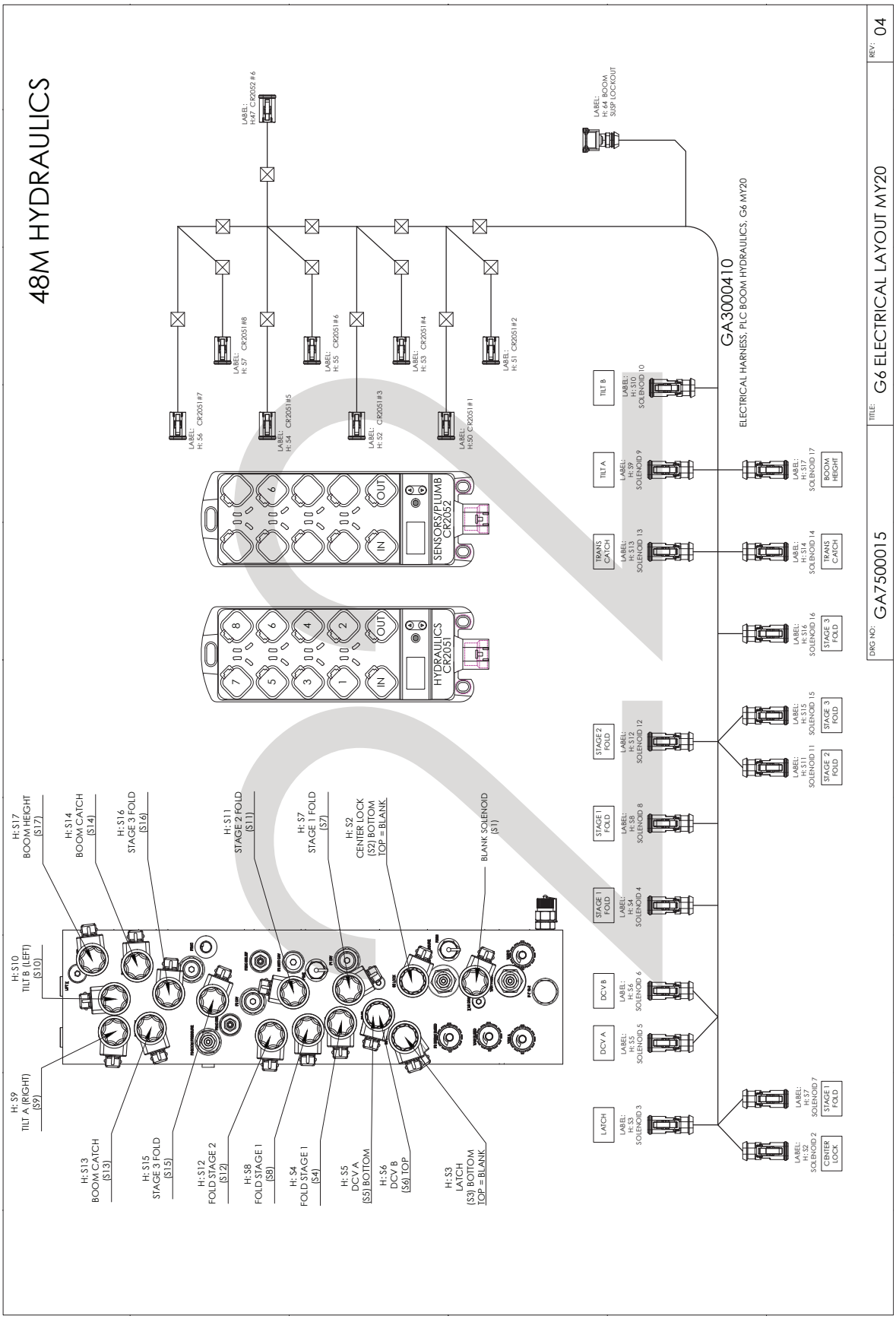

Electrical Schematic - CANBUS Networks

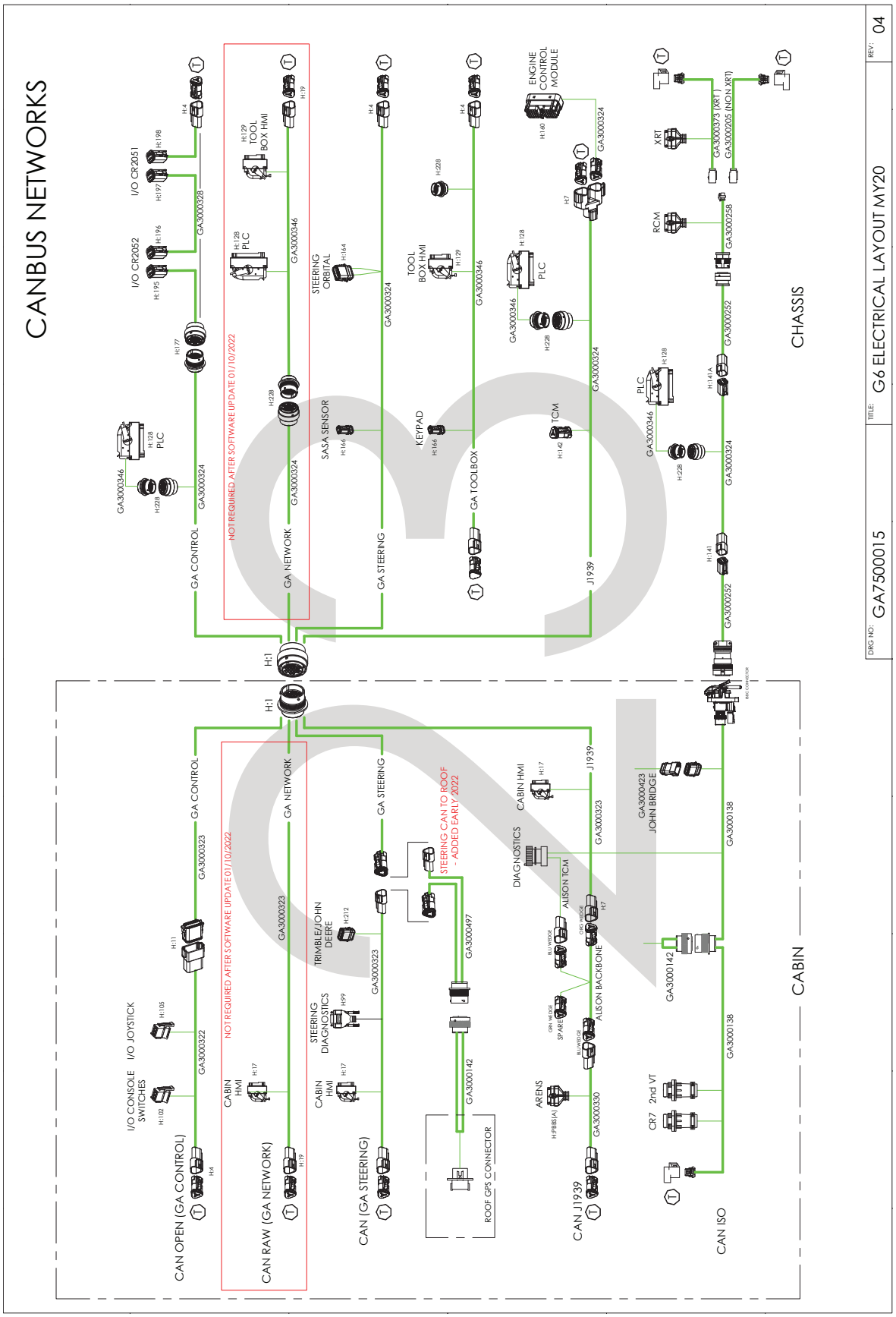

Electrical Schematic - CANBUS Networks

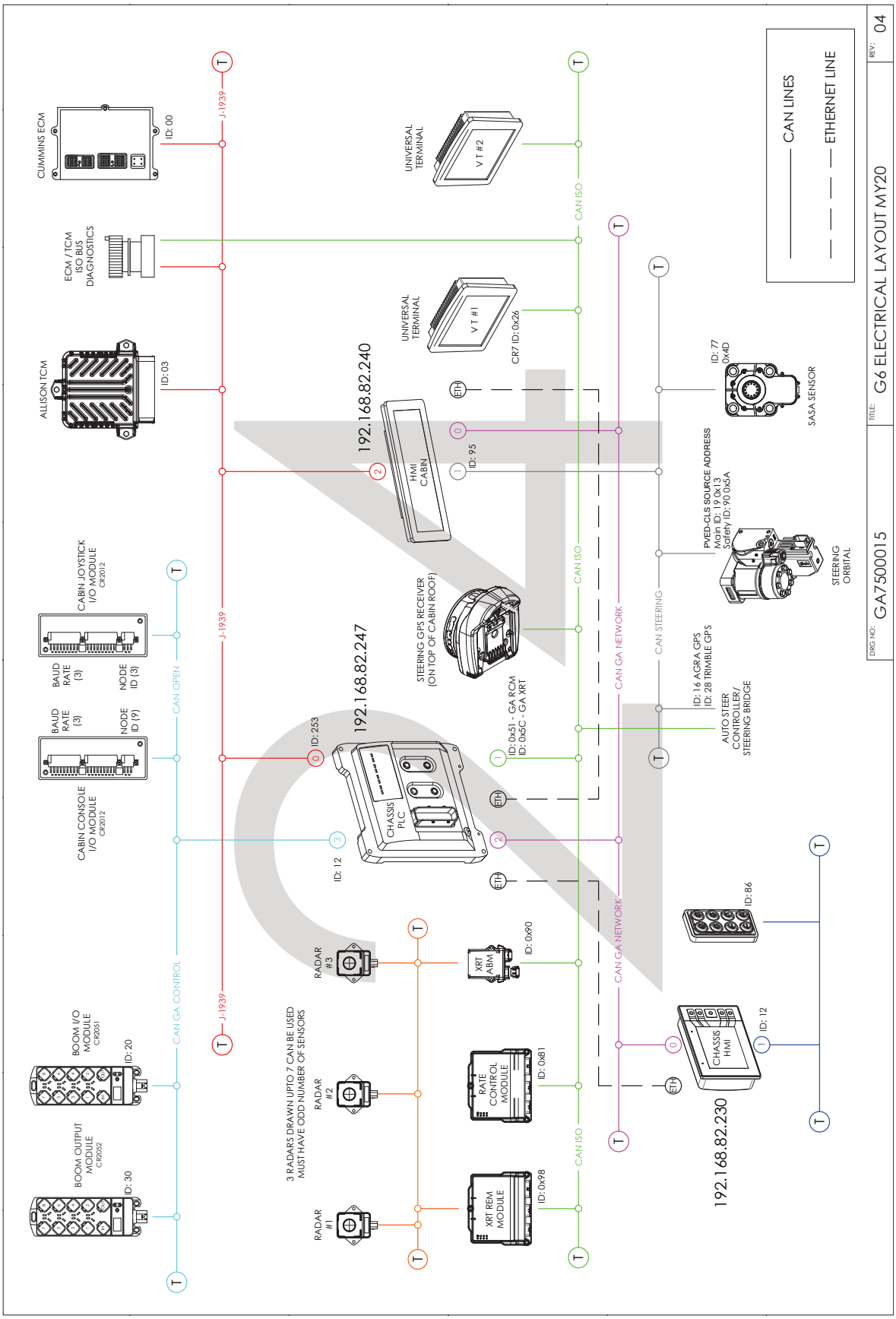

Continue Over Page

G6 MY20 BASE

GA3000322	ELECTRICAL HARNESS, CONSOLE, G6 MY20
GA3000323	ELECTRICAL HARNESS, MAIN CABIN, G6 MY20
GA3000324	ELECTRICAL HARNESS, MAIN CHASSIS, G6 MY20
GA3000325	ELECTRICAL HARNESS, BATTERY KIT, G6 MY20
GA3000326	ELECTRICAL HARNESS, CABIN POWER KIT, G6 MY20
GA5060327	ELECTRICAL HARNESS, PLUMBING, G6 MY20
GA3000328	ELECTRICAL HARNESS, BOOM CENTER, G6 MY20
GA3000329	ELECTRICAL HARNESS, PLC BOOM HYDRAULICS, G6 MY20
GA3000330	ELECTRICAL HARNESS, ARENS PBS, G6 MY20
GA3000345	ELECTRICAL HARNESS, CHASSIS HYDRAULICS G6 MY20
GA3000346	ELECTRICAL HARNESS, CHASSIS PLC, G6 MY20.
GA3000391	ELECTRICAL HARNESS, REAR CAMERA, 11M EXTENSION, IFM
GA3000392	ELECTRICAL HARNESS, ETHERNET CABLE, 5M M12, SUIT IFM
GA3000394	ELECTRICAL HARNESS, TANK CAL, FLOW METER, G6 MY20
GA3000410	ELECTRICAL HARNESS, PLC BOOM HYDRAULICS 48M, G6, MY20
GA3000144	SENSOR, LINEAR NON CONTACT, STEERING, 250MM, RAVEN
GA3000145	ROSE END, M10 SUIT GA3000144, RAVEN
GA3000146	STUD END, M10 SUIT GA3000144, RAVEN
	ELECTRICAL HARNESS, ALLISON TRANSMISSION
	ELECTRICAL HARNESS CUMMINS SENSORS

RCM

GA3000030	TERMINATOR, CAN, ACTIVE, SUIT ISO BUS, RAVEN
GA3000138	ELECTRICAL HARNESS, MAIN ISO SIDE CONSOLE ARMREST, MY17, RAVEN
GA3000142	ELECTRICAL HARNESS, ROOF CABLE EXTENSION, MY17, RAVEN
GA3000198	ELECTRICAL HARNESS, SUIT CR7 ISO VT BASIC, 1157300092, RAVEN
GA3000252	ELECTRICAL HARNESS, RCM, G6 CHASSIS
GA3000258	ELECTRICAL HARNESS, RCM, 16 SECTION 3 TIER, BOOM CENTER
GA3000264	ELECTRICAL HARNESS, RCM, 16 SECTION 3 TIER,
GA3000433	ELECTRICAL HARNESS, RCM, 16 SECTION 3 TIER BREAKOUT, SUIT 48M BOOM
GA3000474	ELECTRICAL HARNESS, RCM, SECTION CONTROL, INNER BOOM, 36M, G6 MY20
GA3000475	ELECTRICAL HARNESS, RCM, SECTION CONTROL, OUTER BOOM, 36M, G6 MY20
GA3000476	ELECTRICAL HARNESS, RCM, SECTION CONTROL, INNER BOOM, 42M, G6 MY20
GA3000477	ELECTRICAL HARNESS, RCM, SECTION CONTROL, OUTER BOOM, 42M, G6 MY20
GA3000259	ELECTRICAL HARNESS, BOOM INNER 36-48M, 16 SECTION , 2 TIER.
GA3000569	ELECTRICAL HARNESS, BOOM OUTER 36-48M, 16 SECTION , 2 TIER.
GA3000260	ELECTRICAL HARNESS, BOOM INNER 36-48M, 16 SECTION , 1 TIER.
GA3000270	ELECTRICAL HARNESS, BOOM OUTER 36-48M, 16 SECTION , 1 TIER.

XRT

GA3000370	ECU, RAVEN XRT, AUTOBOOM, ABM, WITH AUTOBOOM UNLOCK 063-0174-090
GA3000371	ECU, ISOBUS, RAVEN EXPANSION MODULE, REM, XRT 063-0173-965
GA3000373	ELECTRICAL HARNESS, RAVEN XRT MAIN, GOLDACRES SPEC, 115-0235-141
GA3000375	ELECTRICAL HARNESS, RAVEN XRT PRIMARY BOOM, 40', 115-0235-024
GA3000376	ELECTRICAL HARNESS, RAVEN XRT SECONDARY BOOM, 35', WITH TERMINATOR, 115-0235-029
GA3000378	ROTARY SENSOR KIT, WITH LOOSE HARDWARE, RTP, 50 DEGREE, RAVEN XRT, 117-0235-009
GA3000379	DAMPER, MR, RAVEN XRT, VARIABLE, MAGNETO-RHEOLOGICAL, 6" STROKE, 314-1000-001
GA3000382	SENSOR, RAVEN XRT BOOM HEIGHT RADAR, 063-0173-962
GA3000386	ELECTRICAL HARNESS, RAVEN XRT PRIMARY BOOM, 35', 115-0235-023
GA3000387	ELECTRICAL HARNESS, RAVEN XRT SECONDARY BOOM, 30', 115-0235-028

JOHN DEERE

GA3000423	ELECTRICAL HARNESS, AUTO STEER, JD, MY20, G6.
GA3000148	ELECTRICAL HARNESS, JD STARFIRE ROOF ADAPTER, MY17, RAVEN
GA3000416	NODE, CAN BRIDGE SUIT GOLDACRES TO JOHN DEERE STEERING, AGRA-GPS

TRIMBLE

GA3000152	ELECTRICAL HARNESS, TRIMBLE 372 ANTENNA ROOF ADAPTER, MY17, RAVEN
GA3000062	ELECTRICAL HARNESS, RAVEN ISO TO TRIMBLE FMX/FM1000 DISPLAY

DFO

GA5060062	ELECTRICAL HARNESS, COOLER CABIN FRIDGE

DRG NO:	TITLE:	REV:
GA7500015	G6 ELECTRICAL LAYOUT MY20	04

DECALS

Decals - Plumbing

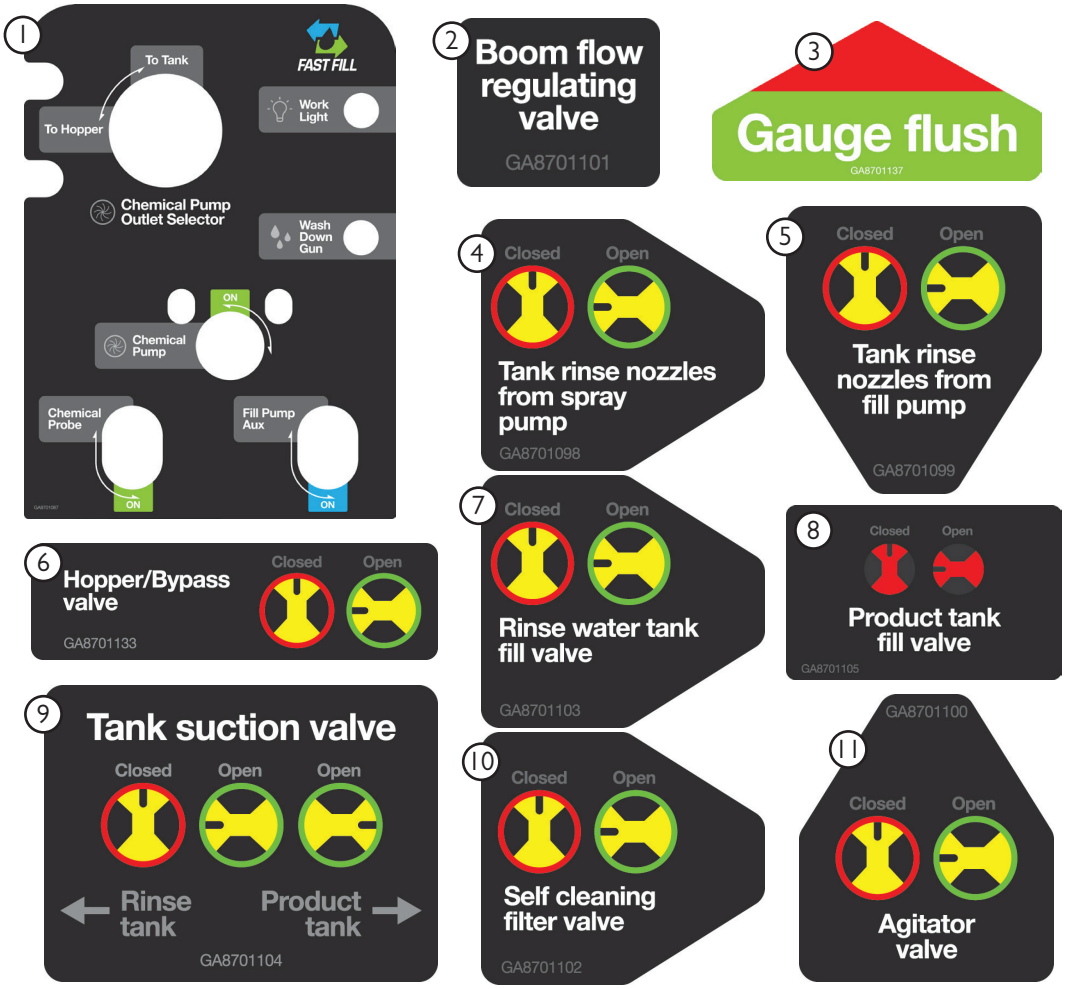

ITEM NO.	PART NUMBER	DESCRIPTION	QTY.
1	GA8701087	LH POD CONTROL STATION	1
2	GA8701101	BOOM FLOW REGULATING VALVE	1
3	GA8701137	GAUGE FLUSH	1
4	GA8701098	TANK RINSE NOZZLES FROM SPRAY PUMP	1
5	GA8701099	TANK RINSE NOZZLES FROM FILL PUMP	1
6	GA8701133	HOPPER/BYPASS VALVE	1
7	GA8701103	RINSE WATER TANK FILL VALVE	1
8	GA8701105	PRODUCT TANK FILL VALVE	1
9	GA8701104	TANK SUCTION VALVE	1
10	GA8701102	SELF CLEANING FILTER VALVE	1
11	GA8701100	AGITATOR VALVE	1

Decals - Electrical

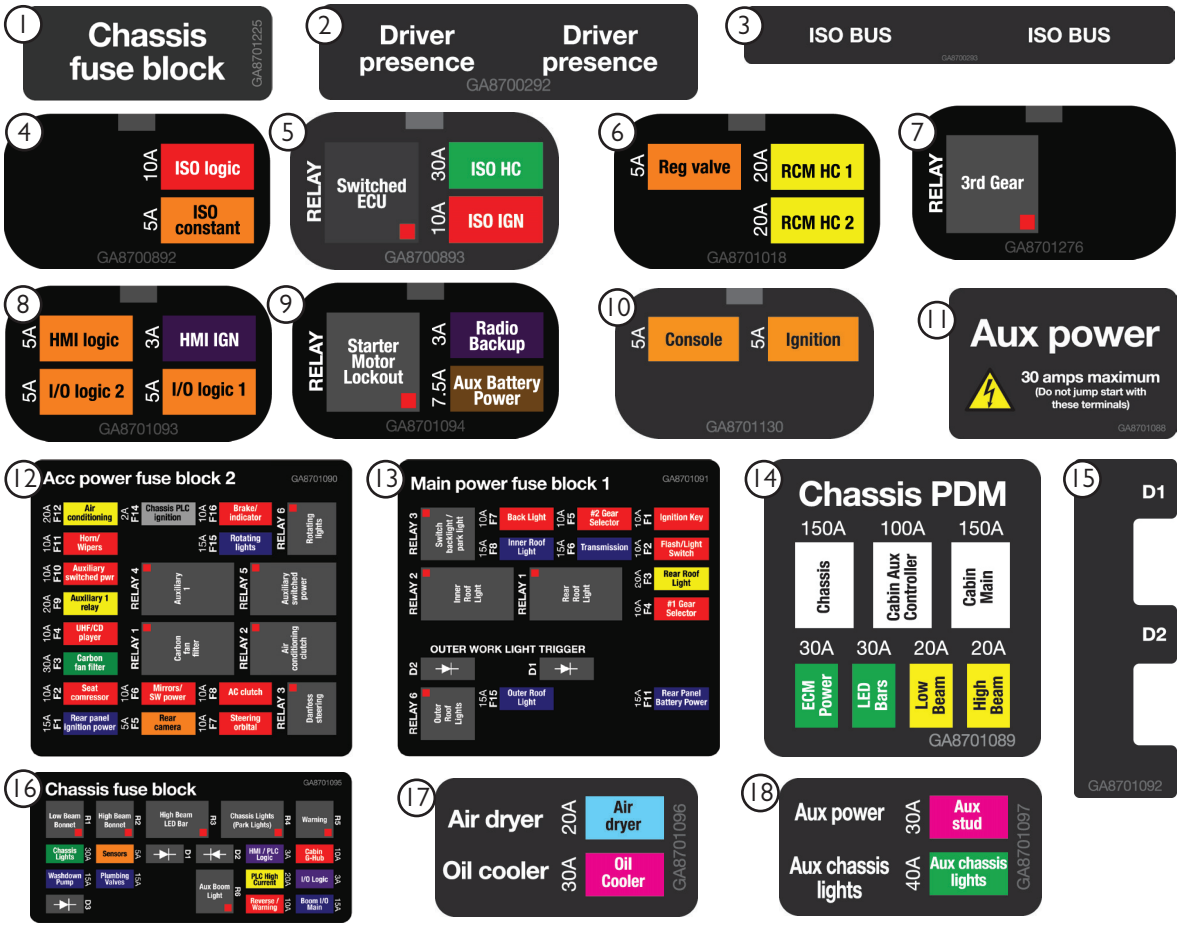

ITEM NO.	PART NUMBER	DESCRIPTION	QTY.
1	GA8701225	CHASSIS FUSE BLOCK	1
2	GA8700292	CABIN WIRING LOOM, DRIVERS PRESENCE	1
3	GA8700293	CABIN WIRING LOOM, ISO BUS	1
4	GA8700892	ISO LOGIC POWER	1
5	GA8700893	ISO MAIN POWER	1
6	GA8701018	RCM POWER	1
7	GA8701276	3RD GEAR RELAY	1
8	GA8701093	CHASSIS FUSE BOX 4	1
9	GA8701094	CHASSIS FUSE BOX 3	1
10	GA8701130	RAVEN CR7 SCREEN	1
11	GA8701088	LH POD AUX POWER	1
12	GA8701090	CHASSIS FUSE BOX 2	1
13	GA8701091	CHASSIS FUSE BOX 1	1
14	GA8701089	CHASSIS PDM	1
15	GA8701092	CHASSIS FUSE BOX 1 INSERT	1
16	GA8701095	CHASSIS FUSE BLOCK LAYOUT	1
17	GA8701096	AIR DRYER & OIL COOLER	1
18	GA8701097	AUX POWER & AUX CHASSIS LIGHTS	1

Decals - Electrical & Cabin

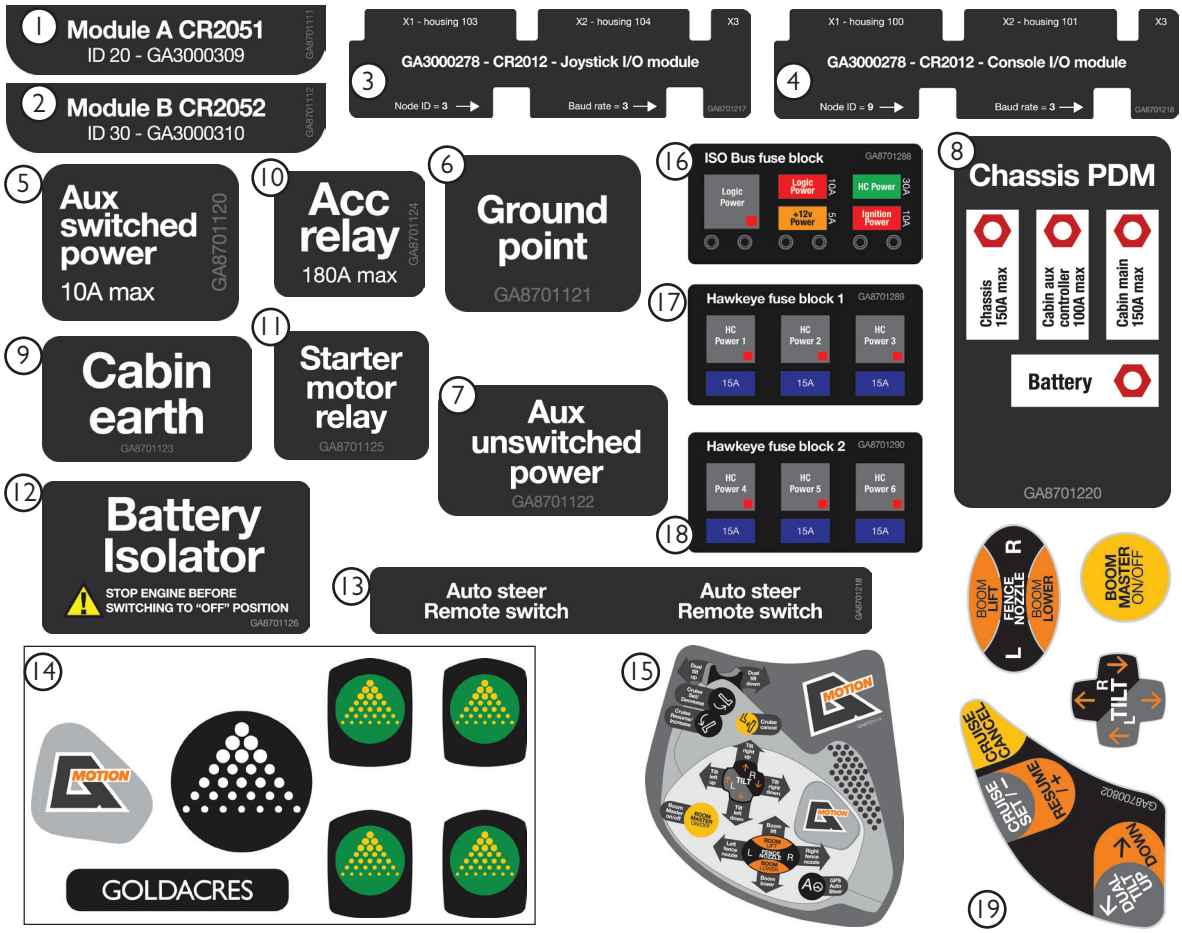

ITEM NO.	PART NUMBER	DESCRIPTION	QTY.
1	GA8701111	IFM IO MODULE A	1
2	GA8701112	IFM IO MODULE B	1
3	GA8701217	JOYSTICK IO MODULE	1
4	GA8701218	CONSOLE IO MODULE	1
5	GA8701120	AUX SWITCHED POWER	1
6	GA8701121	GROUND POINT	1
7	GA8701122	AUX UNSWITCHED POWER	1
8	GA8701220	CHASSIS PDM	1
9	GA8701123	CABIN EARTH	1
10	GA8701124	ACC RELAY	1
11	GA8701125	STARTER MOTOR RELAY	1
12	GA8701126	BATTERY ISOLATOR	1
13	GA8701115	AUTOSTEER REMOTE SWITCH	1
14	GA8701113	CABIN GEL SET	1
15	GA8701114	G-MOTION CONTROL GUIDE	1
16	GA8701288	ISOBUS FUSE BLOCK	1
17	GA8701289	HAWKEYE FUSE BLOCK 1	1
18	GA8701290	HAWKEYE FUSE BLOCK 2	1
19	GA8700802	DECAL KIT, G MOTION JOYSTICK, MY17	1

Decals - Chassis & Booms

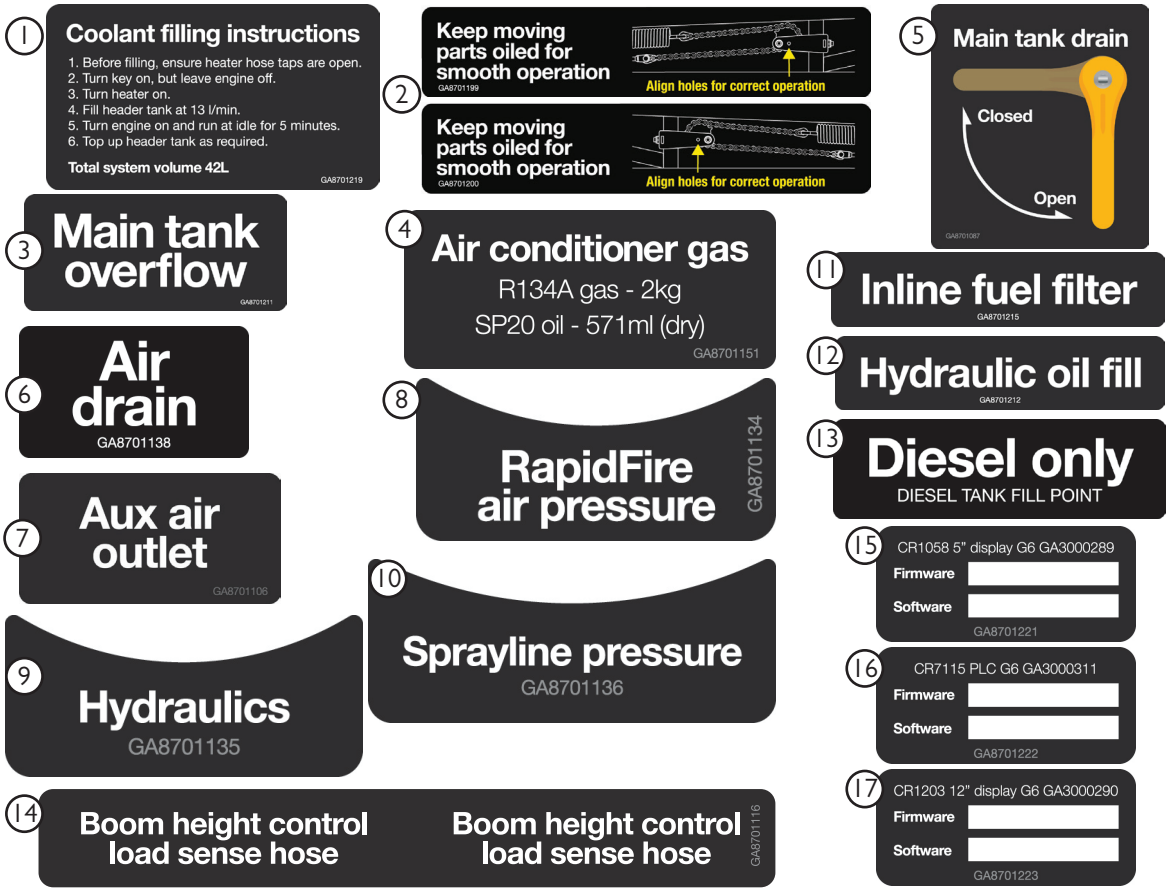

ITEM NO.	PART NUMBER	DESCRIPTION	QTY.
1	GA8701219	COOLANT FILLING INSTRUCTIONS	1
2	GA8701199	KEEP MOVING PARTS OILED FOR SMOOTH OPERATION - LEFT	1
	GA8701200	KEEP MOVING PARTS OILED FOR SMOOTH OPERATION - RIGHT	1
3	GA8701211	MAIN TANK OVERFLOW	1
4	GA8701151	AIR CONDITIONER GAS	1
5	GA8701210	MAIN TANK DRAIN	1
6	GA8701138	AIR DRAIN	1
7	GA8701106	AIR AUX OUTLET	1
8	GA8701134	RAPIDFIRE AIR PRESSURE	1
9	GA8701135	HYDRAULICS	1
10	GA8701136	SPRAYLINE PRESSURE	1
11	GA8701215	INLINE FUEL FILTER	1
12	GA8701212	HYDRAULIC OIL FILL	1
13	GA8701207	DIESEL ONLY	1
14	GA8701116	BOOM HEIGHT CONTROL LOAD SENSE HOSE	1
15	GA8701221	FIRMWARE & SOFTWARE - 5" DISPLAY	1
16	GA8701222	FIRMWARE & SOFTWARE - PLC	1
17	GA8701223	FIRMWARE & SOFTWARE - 12" DISPLAY	1

Decals - Bonnet, Cabin & Tank

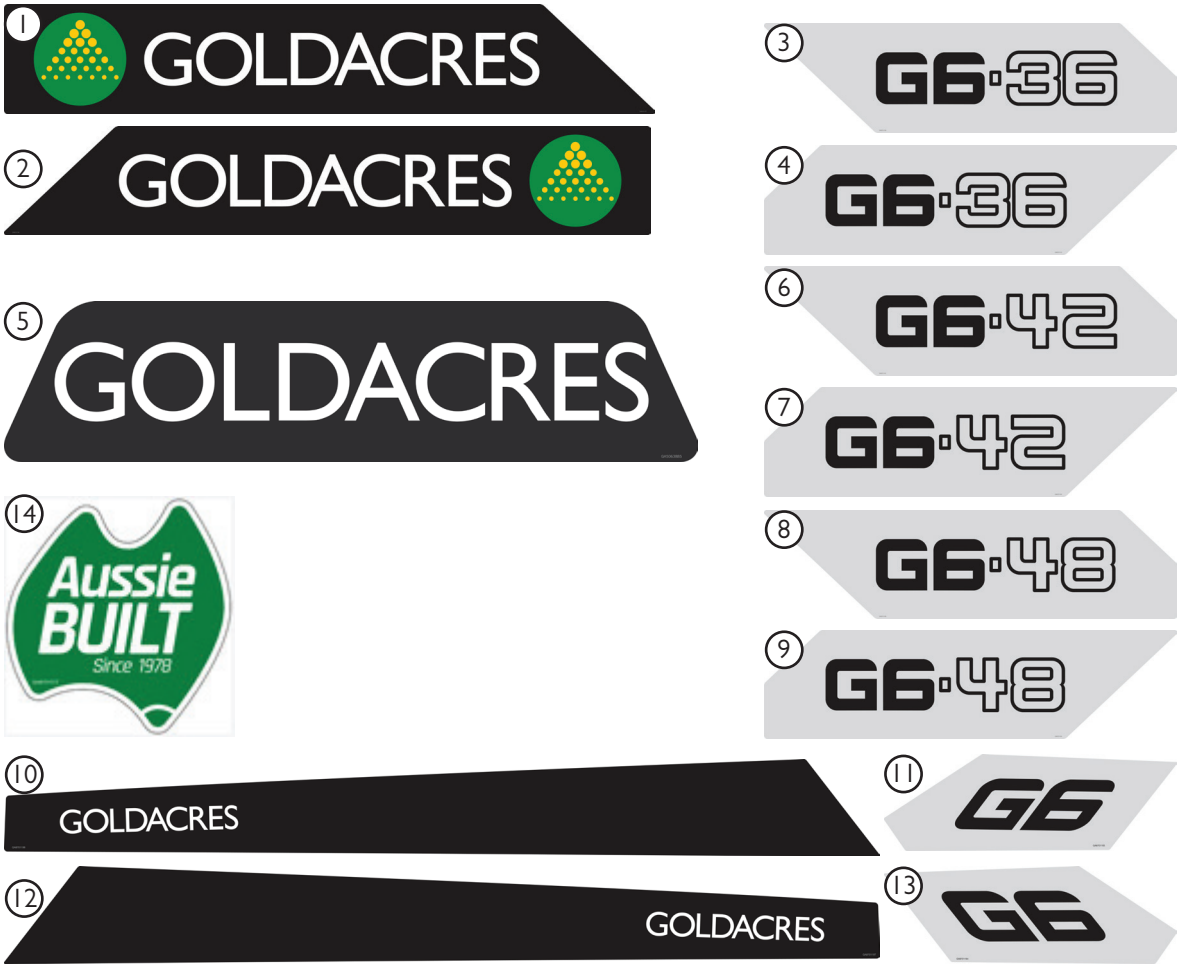

ITEM NO.	PART NUMBER	DESCRIPTION	QTY.
1	GA8701107	GOLDACRES TANK LH	1
2	GA8701108	GOLDACRES TANK RH	1
3	GA8701109	GOLDACRES TANK LH G6 36 METRE	1
4	GA8701110	GOLDACRES TANK RH G6 36 METRE	1
5	GA5063885	GOLDACRES CABIN FRONT	1
6	GA8701191	GOLDACRES TANK LH G6 42 METRE	1
7	GA8701192	GOLDACRES TANK RH G6 42 METRE	1
8	GA8701189	GOLDACRES TANK LH G6 48 METRE	1
9	GA8701190	GOLDACRES TANK RH G6 48 METRE	1
10	GA8701196	GOLDACRES BONNET LH	1
11	GA8701193	GOLDACRES BONNET RH	1
12	GA8701197	GOLDACRES BONNET LH G6	1
13	GA8701194	GOLDACRES BONNET RH G6	1
14	GA8701072	DECAL, AUSSIE BUILT LARGE 115 X 100	2

Decals - Warnings

ITEM NO.	PART NUMBER	DESCRIPTION	QTY.
1	GA8701201	WARNING CAUTION INDUCTION HOPPER	1
2	GA8701202	WARNING HOPPER RELEASE	1
3	GA8701203	WARNING WELDING PROCEDURE	1
4	GA8701128	WARNING KEEP HANDS CLEAR	1
5	GA8701132	CHAIN POINT	1
6	GA8701204	CAUTION HOT EXHAUST	1
7	GA8701205	WARNING KEEP CLEAR WHEN FOLDING BOOMS	1
8	GA8701213	DO NOT FILL PAST THIS POINT	1
9	GA5063850	50 KM/H SPEED LIMIT	1
10	GA8701206	TOWBAR LOAD LIMITS	1
11	GA8701275	WARNING DO NOT PRESSURE WASH ELECTRICAL CONNECTIONS	1
12	GA8701208	DANGER HYDRAULIC LIFT CYLINDERS	1
13	GA8701127	WARNING CHECK WHEEL NUTS	1
14	GA8701198	WARNING DANGER CAUTION CABIN	1
15	GA8701287	WARNING KEEP CLEAR FOLDING LADDER	1
16	GA8701209	DANGER STAND CLEAR BOOMS	1
17	GA8701214	WARNING DO NOT USE ETHER	1
18	GA8701281	WARNING KEEP HANDS CLEAR, TYRE PRESSURE RECOMMENDATIONS	1

HYDRAULICS

Hydraulic Oil Tank Assembly

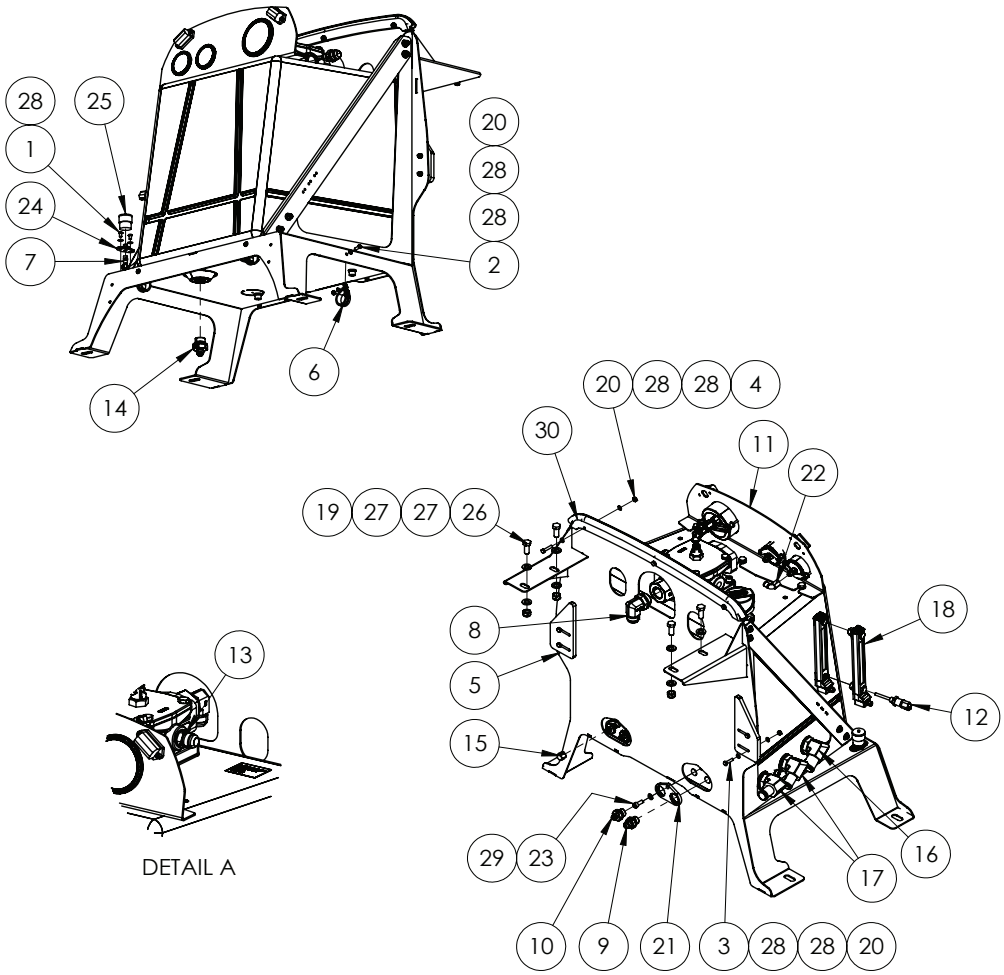

ITEM NO.	PART NUMBER	DESCRIPTION	QTY.
1	GA5004023	BHCS M6 X 10 SS A2-70	2
2	GA5004047	BHCS M6 X 16 GR12.9 ZP	3
3	GA5004073	BOLT M6 X 25 GR8.8 ZP	4
4	GA5004077	BOLT M6 X 30 GR8.8 ZP	3
5	GA5072695	BONNET SIDE SUPPORT PLASTIC SLIDER	2
6	GA5048090	CLAMP P 35MM 56487	3
7	GA5045145	PNEUMATIC FITTING, SWIVEL ELBOW, PUSH IN 6MM, BRASS 1/8" BSPT	1
8	GA3500732	HYDRAULIC ADAPTOR, ELBOW, 90 DEGREE, 1 5/16" JIC MALE X 1" BSPP MALE O-RING, S76-1621	1

* Sub-assembly on following pages
~ See Chapter 20 'Engine & Transmission'

Continued over page

Hydraulic Oil Tank Assembly

ITEM NO.	PART NUMBER	DESCRIPTION	QTY.
9	GA3500861	HYDRAULIC ADAPTOR NIPPLE, 1/2" BSPP O-RING MALE X 3/4" JIC MALE, S74D-0812	1
10	GA3500860	HYDRAULIC ADAPTOR NIPPLE, 1/2" BSPP O-RING MALE X 9/16" JIC MALE, S74D-0809	3
11	GA3500694	HYDRAULIC OIL RESERVOIR AND FRAME,MY20, HYDAC	1
12	GA3500321	HYDRAULIC ADAPTOR, ELBOW, 90 DEGREE, 1/4" BSPT MALE X 3/8" BSPP MALE O-RING, S77-0406	1
13	GA3500720	HYDRAULIC ADAPTER, NIPPLE, 1/2" BSPP O-RING MALE X 1 1/16" JIC MALE, S74-0817	1
14	GA3500787	HYDRAULIC ADAPTER, NIPPLE, 3/4" BSPP O-RING MALE C/W RETAINING RING X 3/4" JIC MALE, S74D-1212	1
15	GA3500793	HYDRAULIC ADAPTOR, CAP, 9/16" JIC FEMALE, S65-09	1
16	GA3500775	HYDRAULIC BARB COUPLING, ELBOW, 1" BSPP O-RING, 1 1/4" BARB MALE, RA12S-90-1620, HANSA-FLEX	1
17	GA3500774	HYDRAULIC BARB COUPLING, ELBOW, 1" BSPP O-RING, 1" BARB MALE, RA12S-90-1616, HANSA-FLEX	2
18	GA3000495	LEVEL GAUGE, WITH LOW LEVEL SWITCH, OIL RESERVOIR, HYDAC, FSK-176-2.4/0/-/12/-S079/-SEW-90	1
19	GA5012461	NUT M12 NYLOC ZP	4
20	GA5048115	NUT M6 NYLOC ZP	10
21	GA4405270	PLATE, OIL RESERVOIR FRONT PORT SUPPORT A	2
22	GA7000015	PNEUMATIC FITTING, FEMALE 1/4" BSPP X 8MM PUSH IN, FEMALE STUD ELBOW	1
23	GA5004707	SHCS M8 X 20 GR12.9 ZP	3
24	GA5070470	MOUNTING FLANGE DONALDSON AIR CLEANER SERVICE INDICATOR REMOTE	1
25	GA5010525	SERVICE INDICATOR KIT 25, SUIT CROP CRUISER AND G3 G4	1
26	GA5000305	SET SCREW M12 X 30 GR8.8 ZP	4
27	GA5000577	WASHER M12 FLAT SS HD	8
28	GA5004437	WASHER M6 FLAT SS	22
29	GA5003643	WASHER M8 FLAT SS HD	3
30	GA5074205	WEAR STRIP, BONNET TOP, SERIES 2 G6	1

* Sub-assembly on following pages

~ See Chapter 20 'Engine & Transmission'

Hydraulic Oil Tank Frame

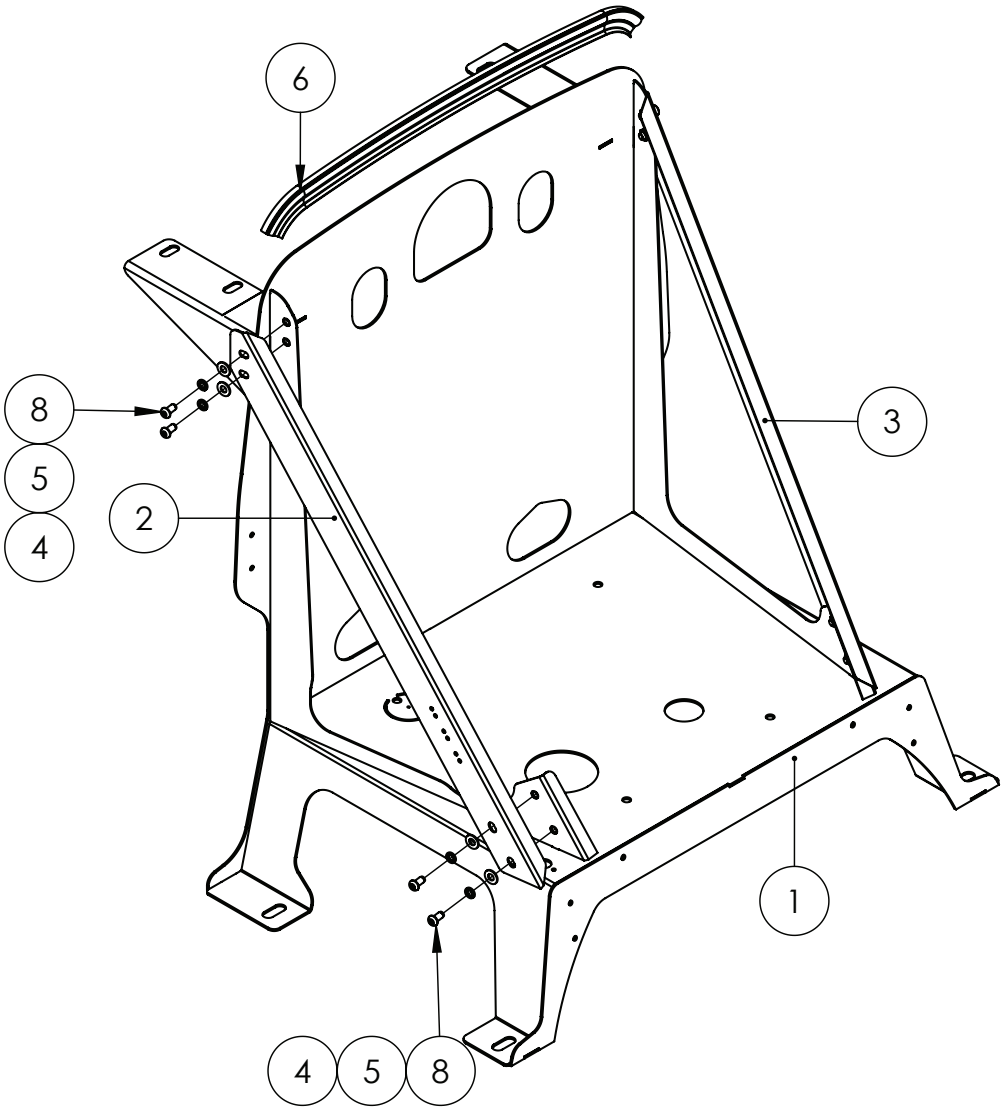

ITEM NO.	PART NUMBER	DESCRIPTION	QTY.
1	GA4602300	FRAME, HYDRAULIC OIL RESERVOIR	1
2	GA4405300	PLATE, OIL RESERVOIR GUSSET, BOLT ON, LH	1
3	GA4405305	PLATE, OIL RESERVOIR GUSSET, BOLT ON, RH	1
4	GA5003643	WASHER 8MM FLAT SS HD	8
5	GA5004919	WASHER 8MM SPRING SS	8
6	GA5072700	PINCHWELD, TOP BLISTER, 16.3MM X 30MM - CUT TO 660 MM	1
7	GA5050690	SHCS M8 X 16 GR12.9 ZP	4
8	GA5004696	BHCS M8 X 16 SS A2-70	4

Hydraulic Oil Tank Mounting

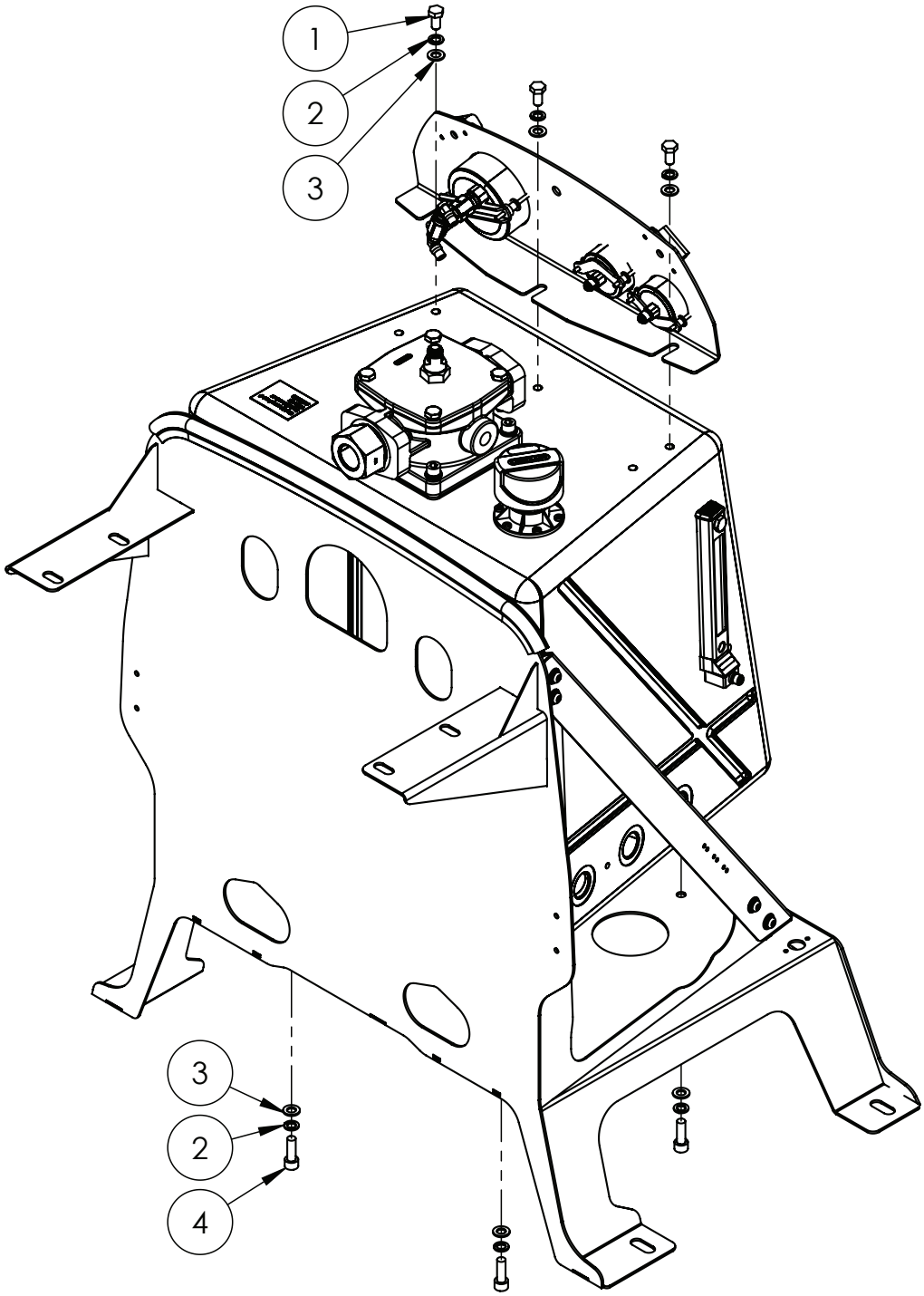

ITEM NO.	PART NUMBER	DESCRIPTION	QTY.
1	GA5006113	BOLT M10 X 20 GR8.8 ZP	3
2	GA5000137	WASHER 10MM SPRING SS	7
3	GA5000117	WASHER 10MM FLAT SS HD	7
4	GA5006129	SHCS M10 X 30 GR12.9 ZP	4

Hydraulic Oil Tank

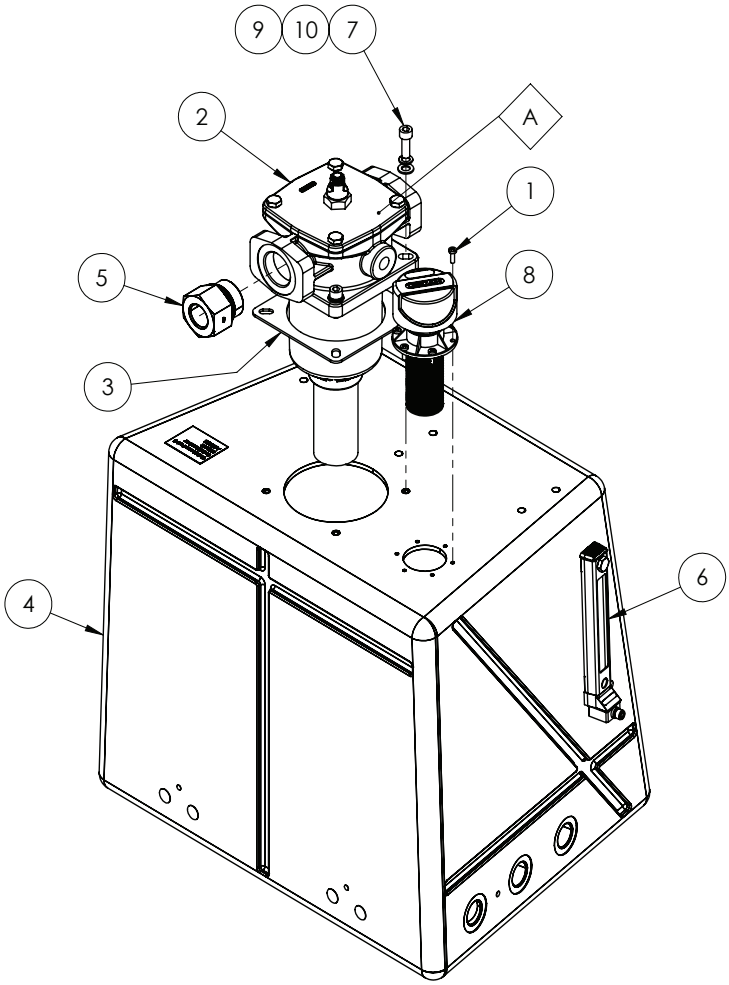

ITEM NO.	PART NUMBER	DESCRIPTION	QTY.
A	GA5069056	FILTER ELEMENT, HYDRAULIC RETURN TO SUIT TANK MOUNTED FILTER GA5069055, HYDAC	1
1	GA5003977	BOLT PAN HEAD M5 X 16 SS A2-70	6
2	GA5069055	FILTER, HYDRAULIC RETURN, TANK TOP, RFM ON 330 V F 10 B 3.0/-V125-SO682, HYDAC	1
3	GA5070580	SEAL KIT, GASKET AND O RING, HYDRAULIC OIL RETURN FILTER HOUSING, HYDAC	1
4	GA3500692	HYDRAULIC OIL RESERVOIR, BARE, WITH CASE DRAIN PORTS, MY20	1
5	GA3500191	HYDRAULIC ADAPTOR, REDUCING BUSH, 1 1/2” BSPP MALE X 1” BSPP FEMALE, S102-2416	1
6	GA3000495	LEVEL GAUGE, WITH LOW LEVEL SWITCH, OIL RESERVOIR, HYDAC, FSK-176-2.4/0/-/12/-S079/-SEW-90	1
7	GA5006129	SHCS M10 X 30 GR12.9 ZP	4
8	GA5078873	TANK BREATHER FILTER WITH FILLER STRAINER, HYDAC, BREATHER ELF P 30 F W 1.0/-AS	1
9	GA5000117	WASHER 10MM FLAT SS HD	4
10	GA5000137	WASHER 10MM SPRING SS	4

* Sub-assembly on following pages

Hydraulic Oil Tank Gauges

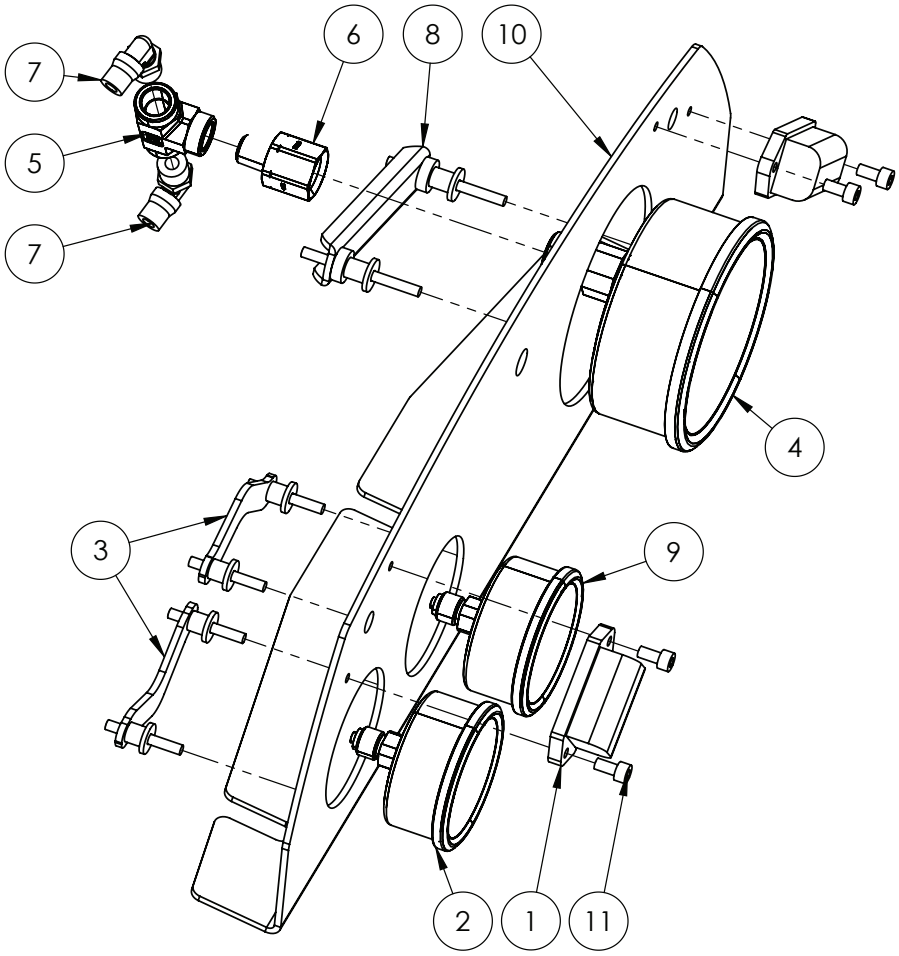

ITEM NO.	PART NUMBER	DESCRIPTION	QTY.
-	GA3500824	HYDRAULIC HOSE, GAUGE LINE, CHASSIS MANIFOLD TO GAUGE, G6 MY20	1
1	GA5075430	LIGHT, LED, GAUGE LIGHT, OIL RESERVOIR, HYDAC	2
2	GA3500693	GAUGE PRESSURE, REAR MOUNT, 160 PSI / 10 BAR, 63MM FACE, 1/4” MALE THREAD	1
3	GA5075455	GAUGE RETAINER, MOUNTING BRACKET, 63MM GAUGE	2
4	GA5075420	GAUGE PRESSURE, REAR MOUNT, 10BAR, 100MM FACE, 3/8” MALE THREAD	1
5	GA3500242	HYDRAULIC ADAPTOR, TEE, 1/4” BSPT FEMALE X 1/4” BSPT FEMALE X 1/4” BSPT FEMALE	1
6	S72N-0406	HYDRAULIC ADAPTOR, 3/8" BSPT FEMALE TO 1/4" BSPT MALE	1
7	GA5016233	PNEUMATIC FITTING, ELBOW, 90 DEGREE, 1/4 BSP MALE X 6MM PUSH IN TYPE, METAL	2
8	GA5075460	GAUGE RETAINER, MOUNTING BRACKET, 100MM GAUGE	1
9	GA3501149	GAUGE PRESSURE, REAR MOUNT, 3500PSI, 250BAR, 63MM FACE, G 1/4” HINTEN, 6007003	1
10	GA4405295	PLATE, GAUGE PLATE, OIL RESERVOIR	1
11	GA5069975	SHCS M5 X 10 SS A2-70	4

Hydraulic Oil Cooler Mounting

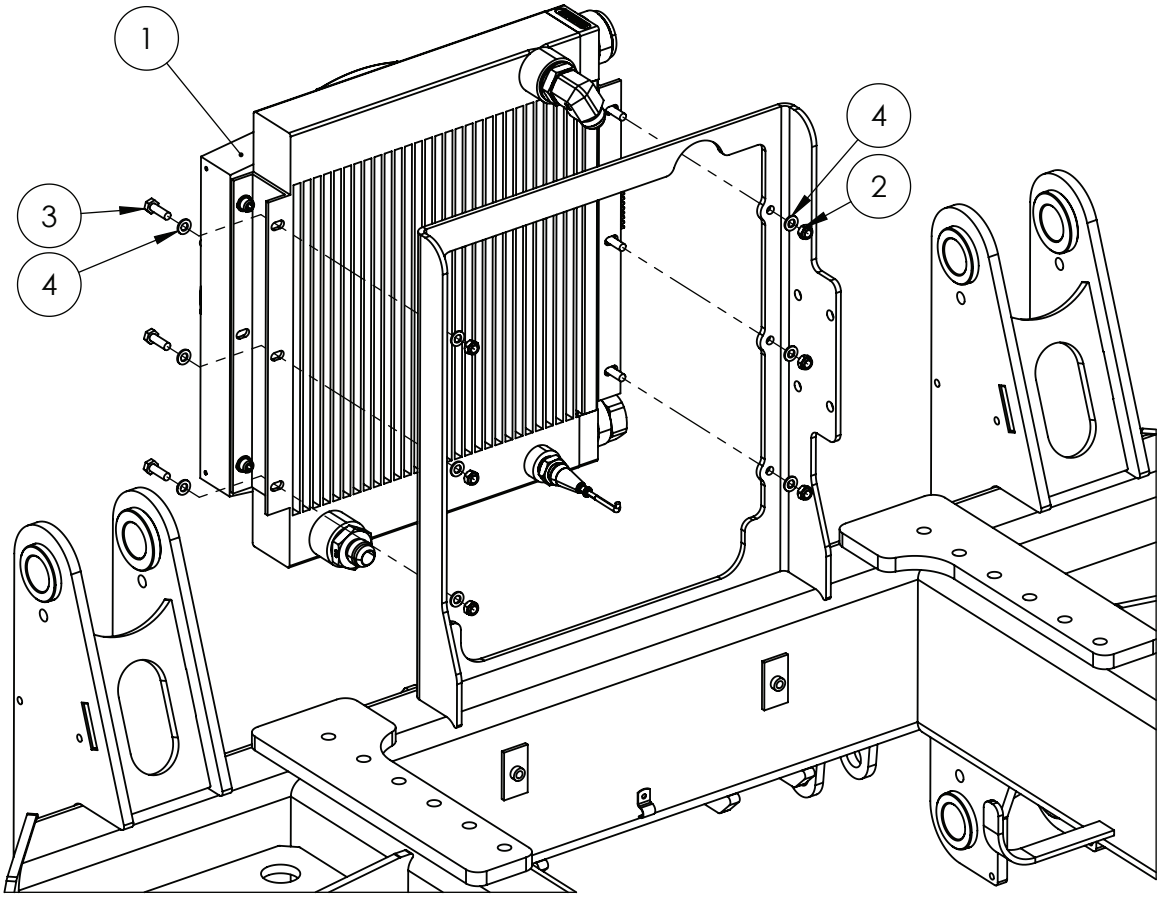

ITEM NO.	PART NUMBER	DESCRIPTION	QTY.
1	GA3500708*	COOLER COMPLETE, HYDRAULIC OIL, THERMAL BYPASS, 12V THERMOFAN	1
2	GA5004917	NUT M8 NYLOC ZP	6
3	GA5004711	BOLT M8 X 25 GR8.8 ZP	6
4	GA5003643	WASHER 8MM FLAT SS HD	12

* Sub-assembly on following pages

Hydraulic Oil Cooler Assembly

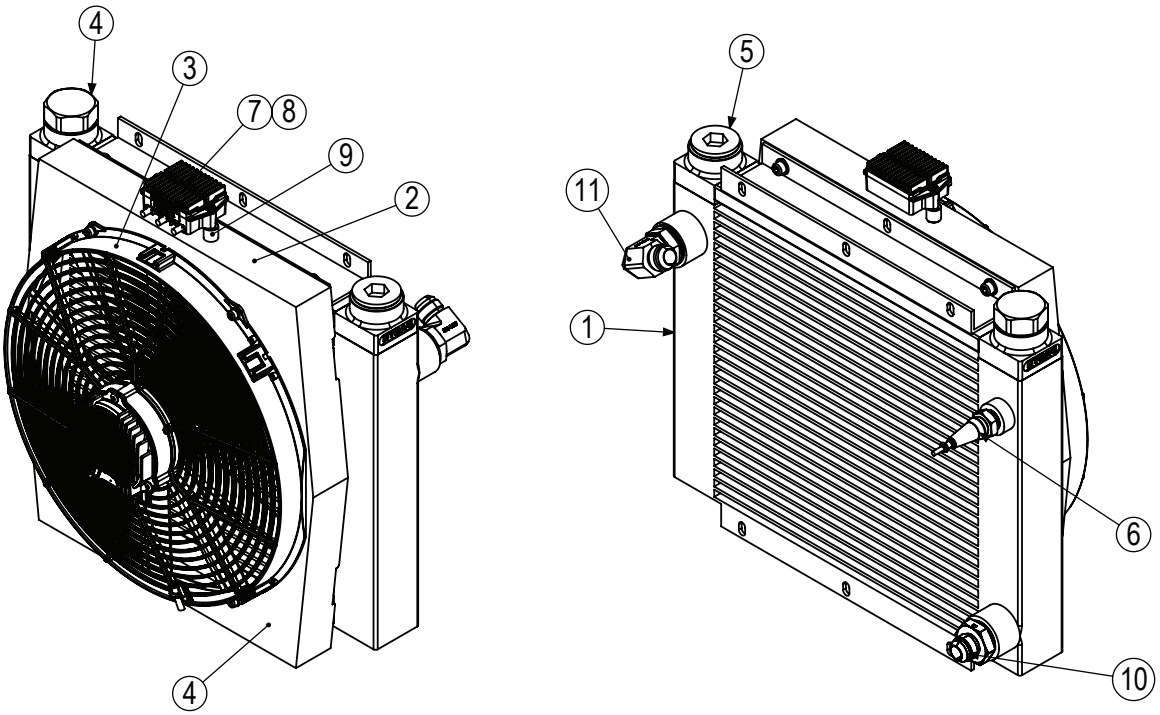

COOLER COMPLETE

PART NUMBER	DESCRIPTION
GA3500708	COOLER COMPLETE, HYDRAULIC OIL, THERMAL BYPASS, 12V THERMOFAN

ITEM NO.	PART NUMBER	DESCRIPTION	QTY.
1	GA3500871	RADIATOR CORE	1
2	GA5025815	HOUSING, SUIT, OIL COLLER, HYDAC, 3083883	1
3	GA3500872	FAN, 385MM, 12V	1
4	GA5078933	INTERGRATED BYPASS THERMO, IBT45-3, HYDAC, 3193660	1
5	GA5025820	PLUG G1-1/4”	1
6	GA3500873	THERMISTOR, M22X1.5, WITH CABLE & CONNECTOR	1
7	GA3500874	ELECTRONIC FAN SPEED CONTROLLER	1
8	GA5025825	KIT ESC THERMO ELECTRIC SHIELD	1
9	GA5025830	VIBRATION MOUNT 15X15 M5	2
10	GA3500735	HYDRAULIC ADAPTOR, NIPPLE, 1” BSPP O-RING MALE X 1 1/16” JIC MALE	1
11	GA3500781	HYDRAULIC ADAPTER, NIPPLE, 1 1/16” JIC MALE X 1” BSPP O-RING MALE	1

Steering Orbital Assembly

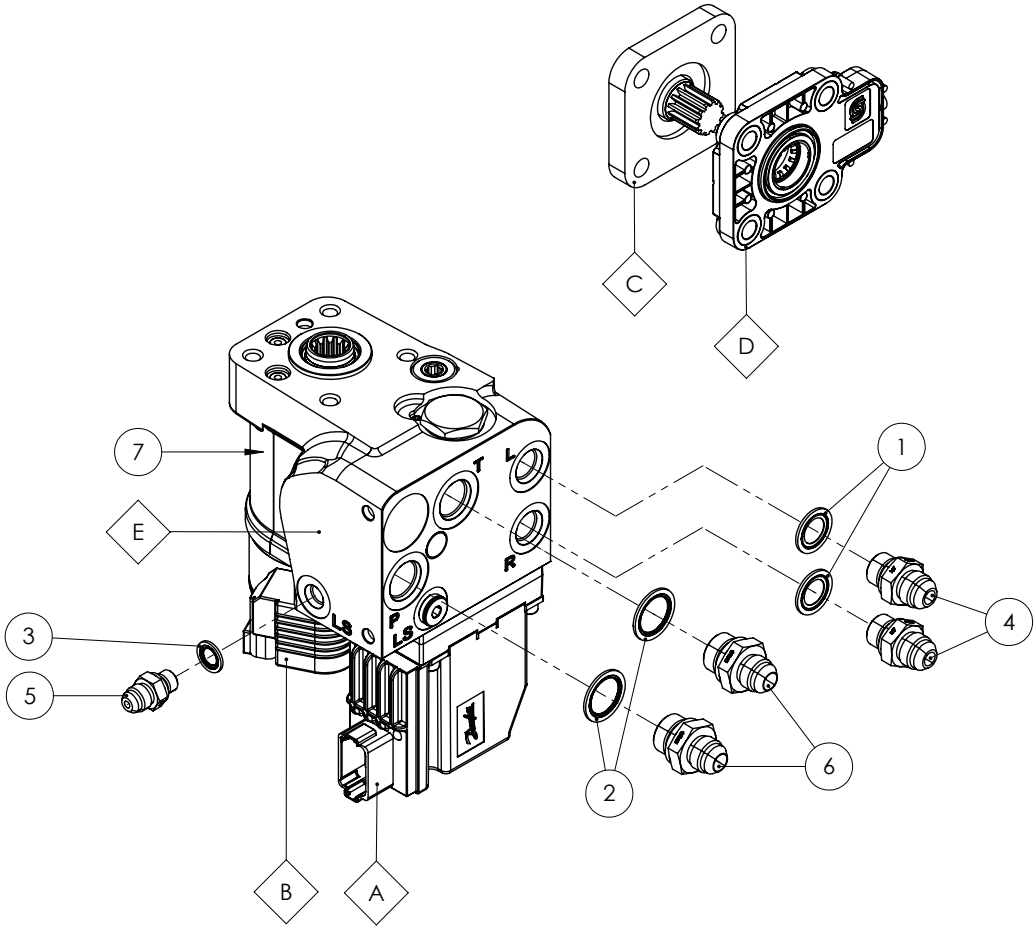

ITEM NO.	PART NUMBER	DESCRIPTION	QTY.
A	GA3500875	ELECTRO HYDRAULIC ACTUATOR PVE, SUIT GA3500706, DANFOSS	-
B	GA3500876	LOCKOUT SOLENOID, SUIT GA3500706, DANFOSS	-
C	GA5078541	SPLINE ADAPTOR, STEERING COLUMN SHAFT, SUIT OSPEC, DANFOSS	-
D	GA3000338	SENSOR, STEERING KICK OUT, SASA, DANFOSS	-
E	GA3501146	SEAL KIT, COMPLETE STEERING ORBITAL GA3500706, OSPE DANFOSS	-
1	GA5077886	HYDRAULIC SEAL, METAL BONDED, M18, MBD-18	2
2	GA3500727	HYDRAULIC ADAPTOR, SEAL, METAL BONDED, M22, MBD-22	2
3			1
4	GA3500728	HYDRAULIC ADAPTOR, NIPPLE, 3/4” JIC MALE X M18 X 1.5 MALE, M7-1812	
5	GA3500725	HYDRAULIC ADAPTOR, SEAL, METAL BONDED, M12, MBD-12	1
6	GA3500726	HYDRAULIC ADAPTOR, NIPPLE,3/4” JIC MALE X M22 X 1.5 MALE, M7L-2212	2
7	GA3500706	STEERING ORBITAL, 250CC, AUTO STEER, OSPE DANFOSS	

Brake Pedal Assembly

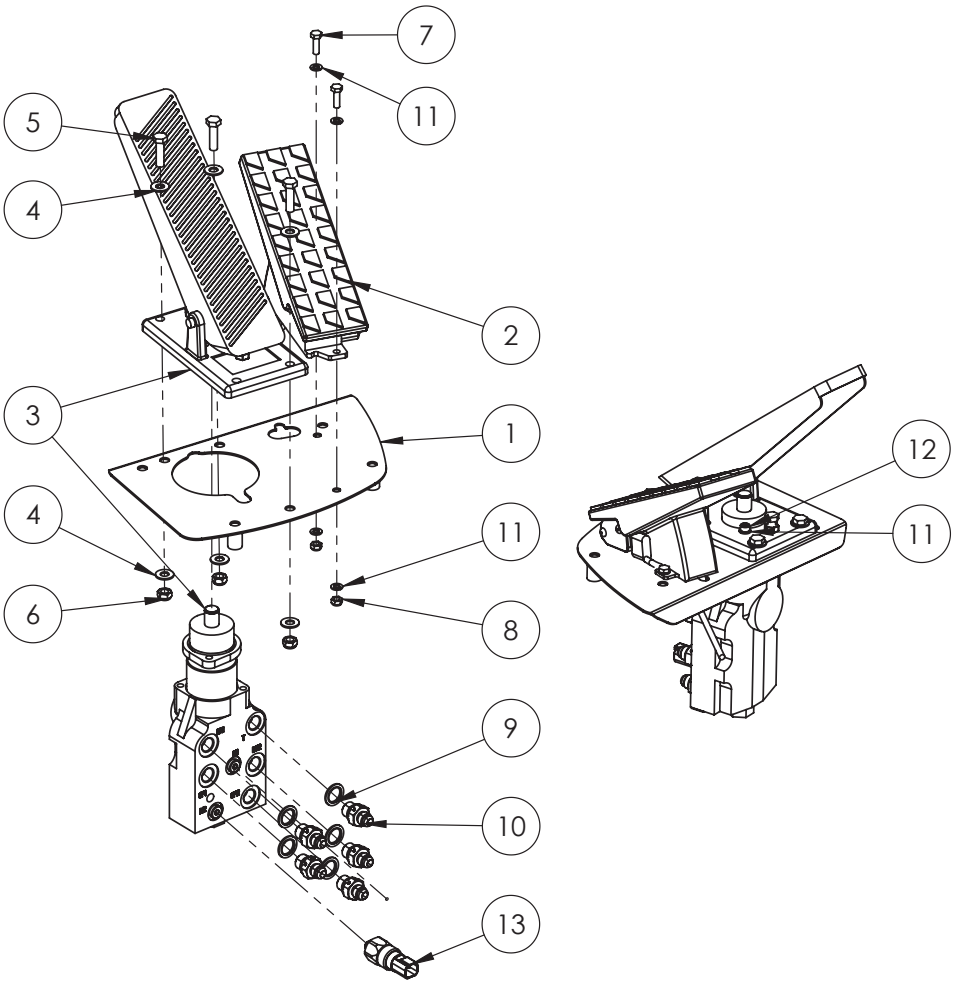

ITEM NO.	PART NUMBER	DESCRIPTION	QTY.
1	GA4600270	ACCELERATOR AND BRAKE PEDAL MOUNT	1
2	GA5065460	THROTTLE PEDAL ELECTRONIC, FOOT, WITH IDLE VALIDATION	1
3	GA3500826	BRAKE PEDAL AND VALVE, TANDEM CIRCUIT, 150 BAR, BOSCH REXROTH	1
4	GA5003643	WASHER 8MM FLAT SS HD	6
5	GA5011475	BOLT M8 X 30 GR8.8 ZP	3
6	GA5052590	NUT M8 NYLOC SS	3
7	GA5004063	BOLT M6 X 20 SS A-70	2
8	GA5048115	NUT M6 NYLOC ZP	2
9	GA3500129	HYDRAULIC ADAPTOR, SEAL, METAL BONDED, M16	5
10	GA3500714	HYDRAULIC ADAPTER, NIPPLE, 9/16” JIC MALE X M16X1.5 MALE	5
11	GA5004437	WASHER 6MM FLAT SS	6
12	GA5004061	SHCS M6 X 25 SS A2-70	2
13	GA3000066	PRESSURE SWITCH, HYDRAULIC, NO 1/8”, 1-10 BAR	1

Manifold - Brake & Fan

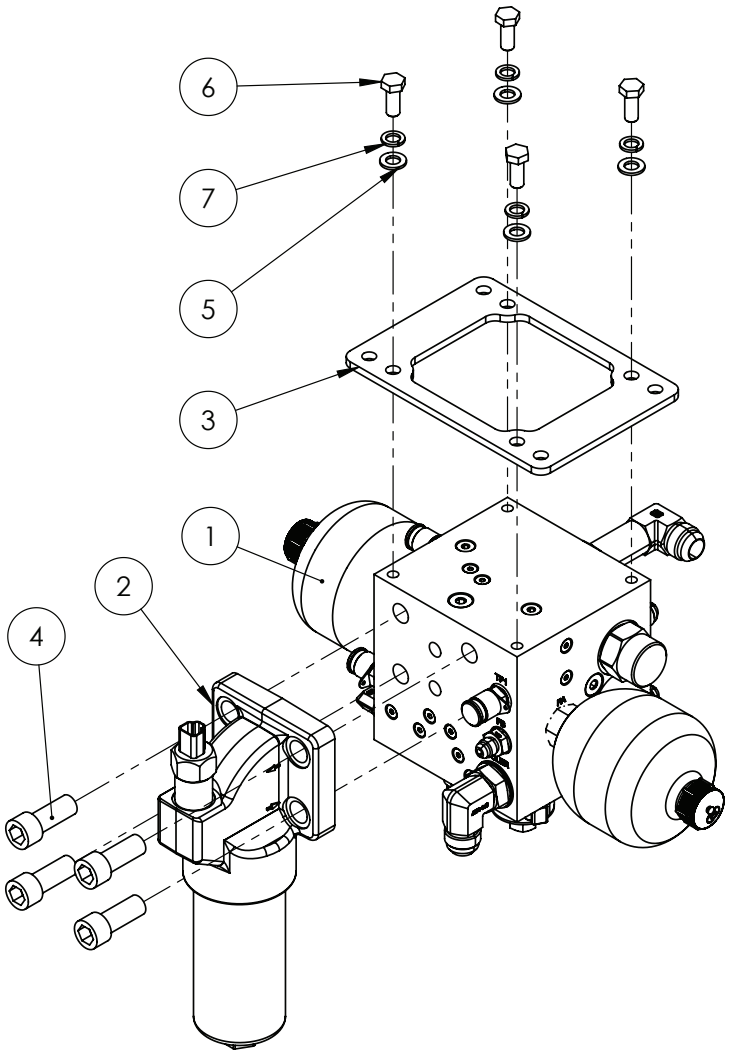

ITEM NO.	PART NUMBER	DESCRIPTION	QTY.
1	GA3500685	HYDRAULIC MANIFOLD ASSEMBLY, BRAKE CHARGER AND FAN CONTROL	1
2	GA3500705	HYDRAULIC PRESSURE FILTER ASSEMBLY, 10 MICRON, 4 BOLT FLANGE MOUNT, ELECTRONIC CLOGGING INDICATOR	1
3	GA4406170	PLATE, MOUNT, HYDRAULIC MANIFOLD, BRAKE AND FAN	1
4	GA5000925	SHCS M16 X 40 GR12.9 ZP	4
5	GA5000117	WASHER 10MM FLAT SS HD	4
6	GA5006161	BOLT M10 X 25 GR8.8 ZP	4
7	GA5000137	WASHER 10MM SPRING SS	4

Manifold - Brake & Fan

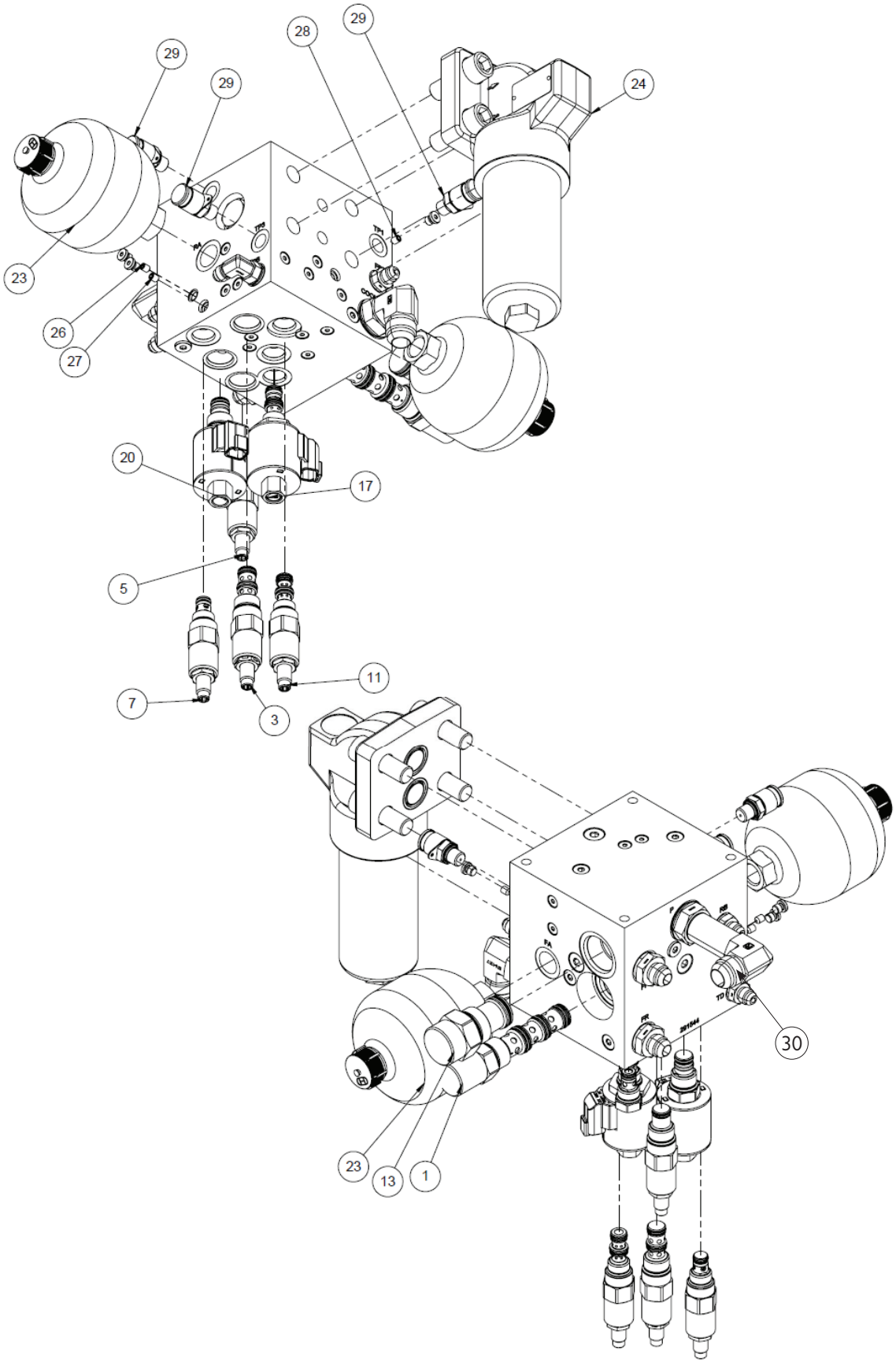

Manifold - Brake & Fan

ITEM NO.	PART NUMBER	DESCRIPTION	QTY.
1	GA3501577	VALVE, HYDRAULIC, PRESSURE COMPENSATOR, OILPATH, EC12-42-0-N-160	1
1.1	GA3500906	SEAL KIT, OILPATH, SK12-4N-MMM	
3	GA3500897	HYDRAULIC CARTRIDGE, UNLOADER VALVE, OILPATH, UP10-31A-0-N-80-30	1
3.1	GA3500920	SEAL KIT, OILPATH, SK10-3N-BM	
5	GA3500903	HYDRAULIC CARTRIDGE, RELIEF VALVE, OILPATH, RV10-26A-0-N-30	1
5.1	GA3500904	SEAL KIT, OILPATH, SK10-2N-B	
7	GA3500921	HYDRAULIC CARTRIDGE, RELIEF VALVE, OILPATH, RV08-29A-0-N-35	1
7.1	GA3500916	SEAL KIT, OILPATH, SK08-2N-T/B	
9	GA3500923	HYDRAULIC CARTRIDGE, CHECK VALVE, OILPATH, CV08-20-0-N-04	1
9.1	GA3500885	SEAL KIT, OILPATH, SK-2N-T	
11	GA3500891	HYDRAULIC CARTRIDGE, PRESSURE REDUCING VALVE, OILPATH, PR58-38A-0-P-20	1
11.1	GA3500892	SEAL KIT, OILPATH, SK08-3N-BM	
13	GA3500899	HYDRAULIC CARTRIDGE, CHECK VALVE, OILPATH, CV16-20T-0-N-150	1
13.1	GA3500900	SEAL KIT, OILPATH, SK16-2N-T	
15	GA3500924	HYDRAULIC CARTRIDGE, LOAD SENSE SHUTTLE VALVE, OILPATH, LS10-41-0-N	1
15.1	GA3500925	SEAL KIT, OILPATH, SK10-4N-TBX	
17	GA3500926	HYDRAULIC CARTRIDGE, SOLENOID VALVE, OILPATH, SV38-38-0-N-00	1
17.1	GA3500927	SEAL KIT, OILPATH, SK38-3N-MM	
17.2	GA3000579	COIL, 12V DC, OILPATH, 4303712	
20	GA3500928	HYDRAULIC CARTRIDGE, PRESSURE RELIEVING PROPORTIONAL VALVE, OILPATH, TS10-27A-0-N-00	1
20.1	GA3500904	SEAL KIT, OILPATH, SK10-2N-B	
20.2	GA3000577	COIL, 12V DC, OILPATH, 4303712	
23	GA3500929	HYDRAULIC ACCUMULATOR, 0.5L, 90BAR, OILPATHSTDA050-NBR-P3-B-M1	2
24	GA3500705	HYDRAULIC PRESSURE FILTER ASSEMBLY, 10 MICRON, 4 BOLT FLANGE MOUNT, ELECTRONIC CLOGGING INDICATOR, HYDAC	1
25	GA3500895	ORIFICE PLUG, 1/8" BSPT, 2.5MM	1
26	GA3500930	ORIFICE PLUG, M6 X 8MM, 0.5MM	1
27	GA3500931	GRUB SCREW, M6 X 8MM, BLANKING PLUG	1
28	GA3500932	ORIFICE PLUG, M6 X 8MM, 0.8MM	1
29	GA3500133	HYDRAULIC COUPLING, EASY TEST POINT, 1/4" BSPP	3
30	GA3500792	HYDRAULIC ADAPTOR, ELBOW, 90 DEGREE, EXTENSION, 1 1/16” JIC MALE X 3/4” BSPP MALE O-RING, S70-1217	

Manifold - Chassis - Fixed Axle - 36m-42m

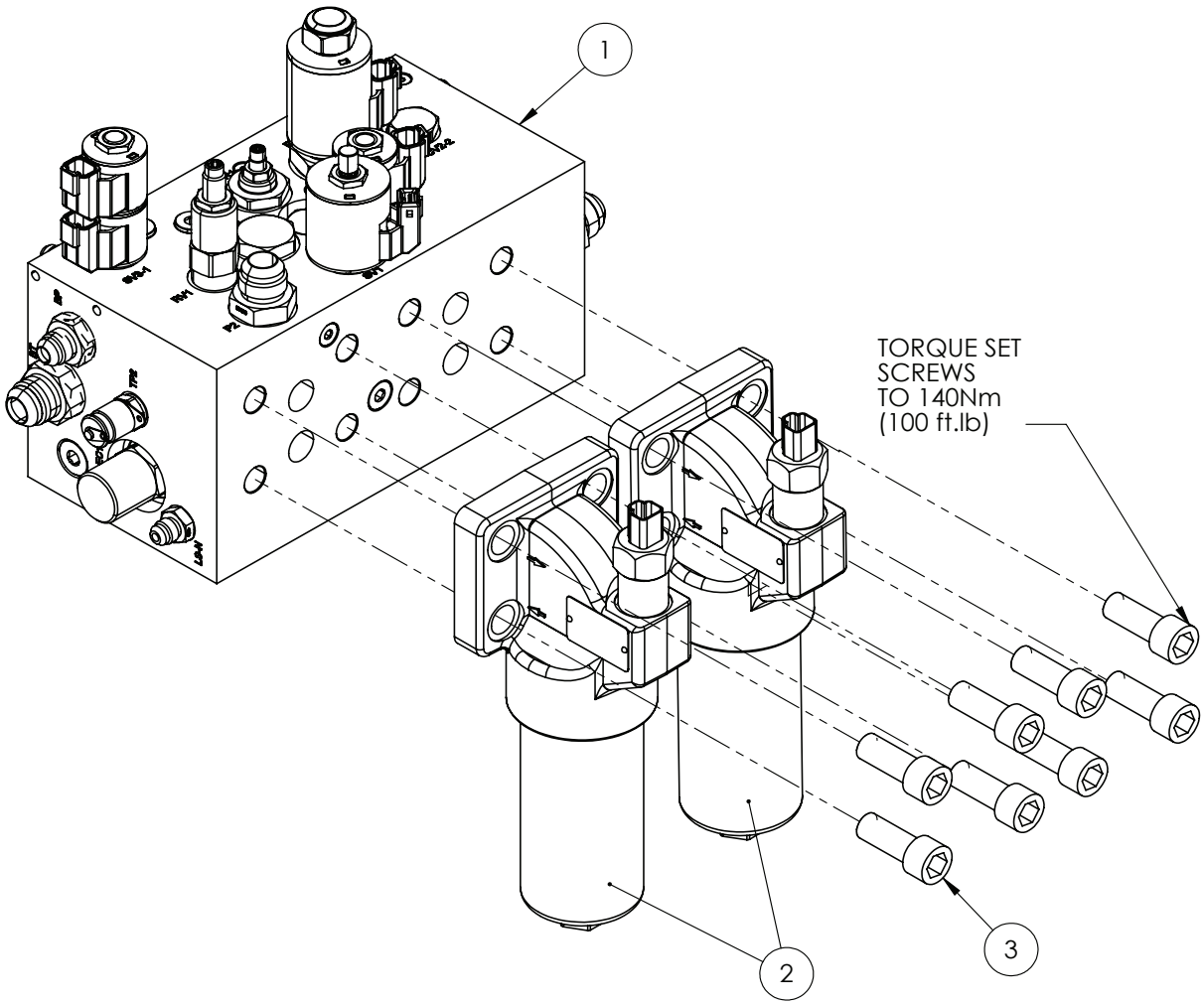

ITEM NO.	PART NUMBER	DESCRIPTION	QTY.
1	GA3500678	HYDRAULIC MANIFOLD ASSEMBLY, CHASSIS CONTROL, INCLUDES STEERING PRIORITY, PUMP SPEED CONTROL AND LOAD SENSE	1
2	GA3500705	HYDRAULIC PRESSURE FILTER ASSEMBLY, 10 MICRON, 4 BOLT FLANGE MOUNT, ELECTRONIC CLOGGING INDICATOR, HYDAC	2
3	GA5000925	SHCS M16 X 40 GR12.9 ZP	8

Manifold - Chassis - Adjustable Axle - 36m-42m

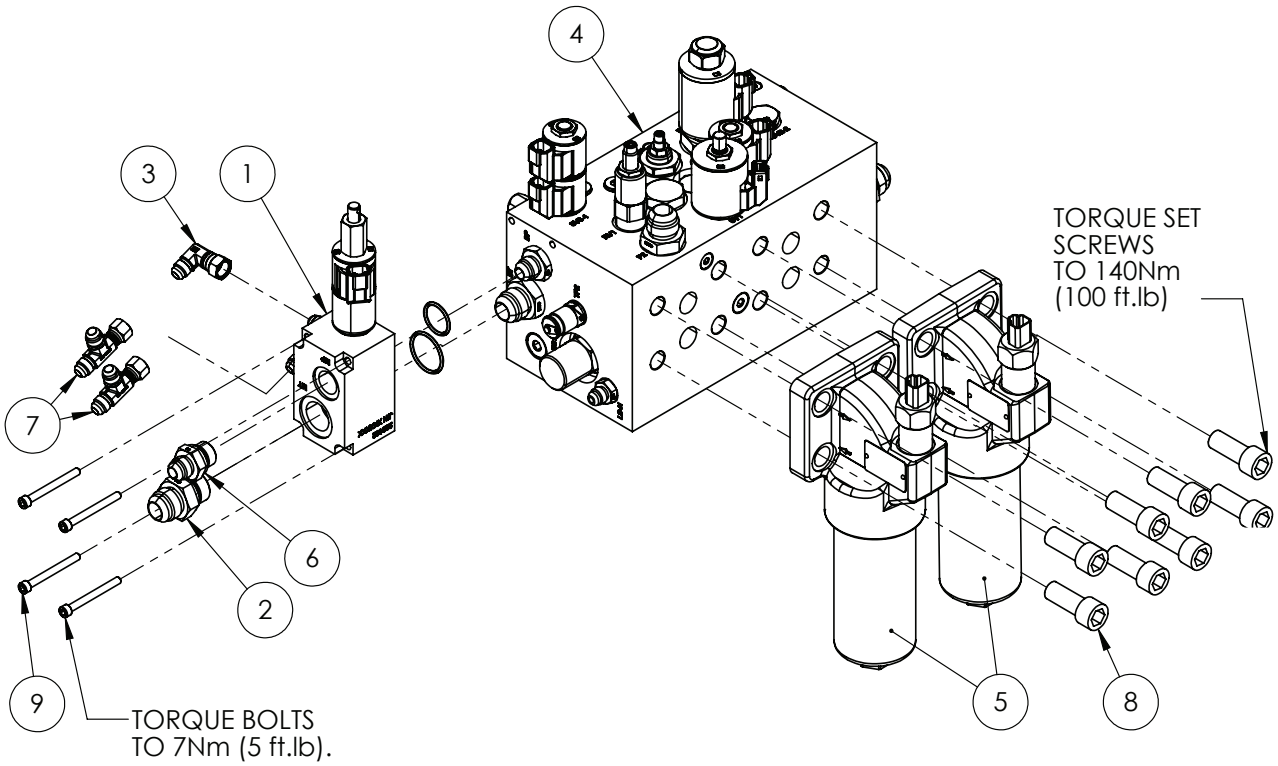

ITEM NO.	PART NUMBER	DESCRIPTION	QTY.
1	GA3501084	EXPANSION MODULE, INCL. SV08-47DM-0-N-12ER, 3-4m AXLES, G6, MY21	1
2	GA3500711	HYDRAULIC ADAPTOR NIPPLE, 3/4” BSP O-RING X 1 1/16” JIC, S74-1217	1
3	GA3500002	HYDRAULIC COUPLING, ELBOW, 90 DEGREE, 9/16” MALE JIC, 9/16” FEMALE SWIVEL JIC	1
4	GA3500678	HYDRAULIC MANIFOLD ASSEMBLY, CHASSIS CONTROL, INCLUDES STEERING PRIORITY, PUMP SPEED CONTROL AND LOAD SENSE	1
5	GA3500705	HYDRAULIC PRESSURE FILTER ASSEMBLY, 10 MICRON, 4 BOLT FLANGE MOUNT, ELECTRONIC CLOGGING INDICATOR, HYDAC	2
6	GA3500303	HYDRAULIC ADAPTER, NIPPLE, 1/2” BSPP O-RING MALE X 3/4” JIC MALE, S74-0812	1
7	GA3500144	HYDRAULIC ADAPTOR, TEE, 9/16” JIC MALE X 9/16” JIC MALE X 9/16” JIC FEMALE SWIVEL, S67-090909	2
8	GA5000925	SHCS M16 X 40 GR12.9 ZP	8
9	GA5070460	SHCS M6 X 60 SS A2-70	4

Continue Over Page

Manifold - Chassis - Fixed Axle - 48m

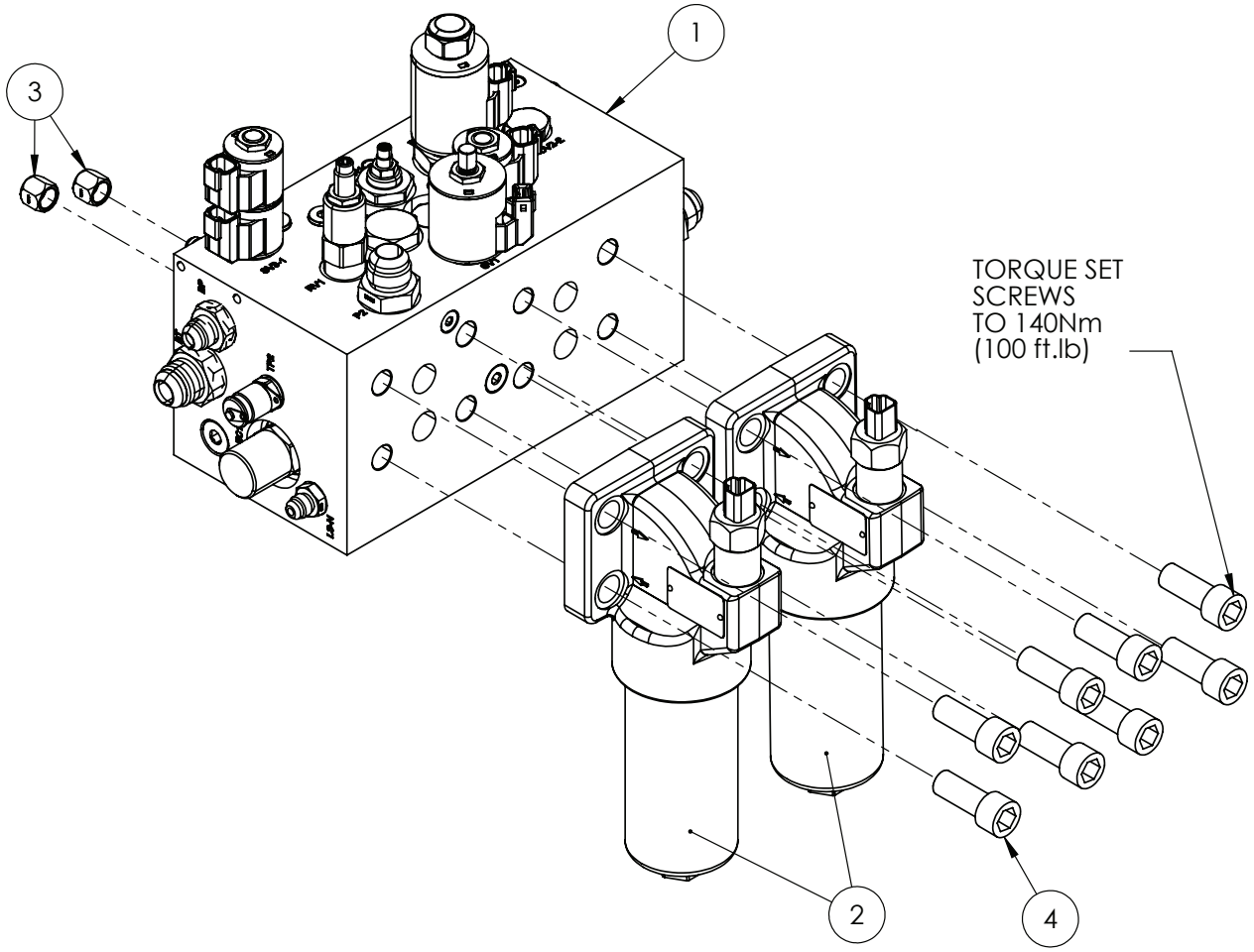

ITEM NO.	PART NUMBER	DESCRIPTION	QTY.
1	GA3500678	HYDRAULIC MANIFOLD ASSEMBLY, CHASSIS CONTROL, INCLUDES STEERING PRIORITY, PUMP SPEED CONTROL AND LOAD SENSE	1
2	GA3500705	HYDRAULIC PRESSURE FILTER ASSEMBLY, 10 MICRON, 4 BOLT FLANGE MOUNT, ELECTRONIC CLOGGING INDICATOR, HYDAC	2
3	GA3500793	HYDRAULIC ADAPTOR, CAP, 9/16" JIC FEMALE, S65- 09	2
4	GA5000925	SHCS M16 X 40 GR12.9 ZP	8

Continue Over Page

Manifold - Chassis - 3-4m - Adjustable Axle - 48m

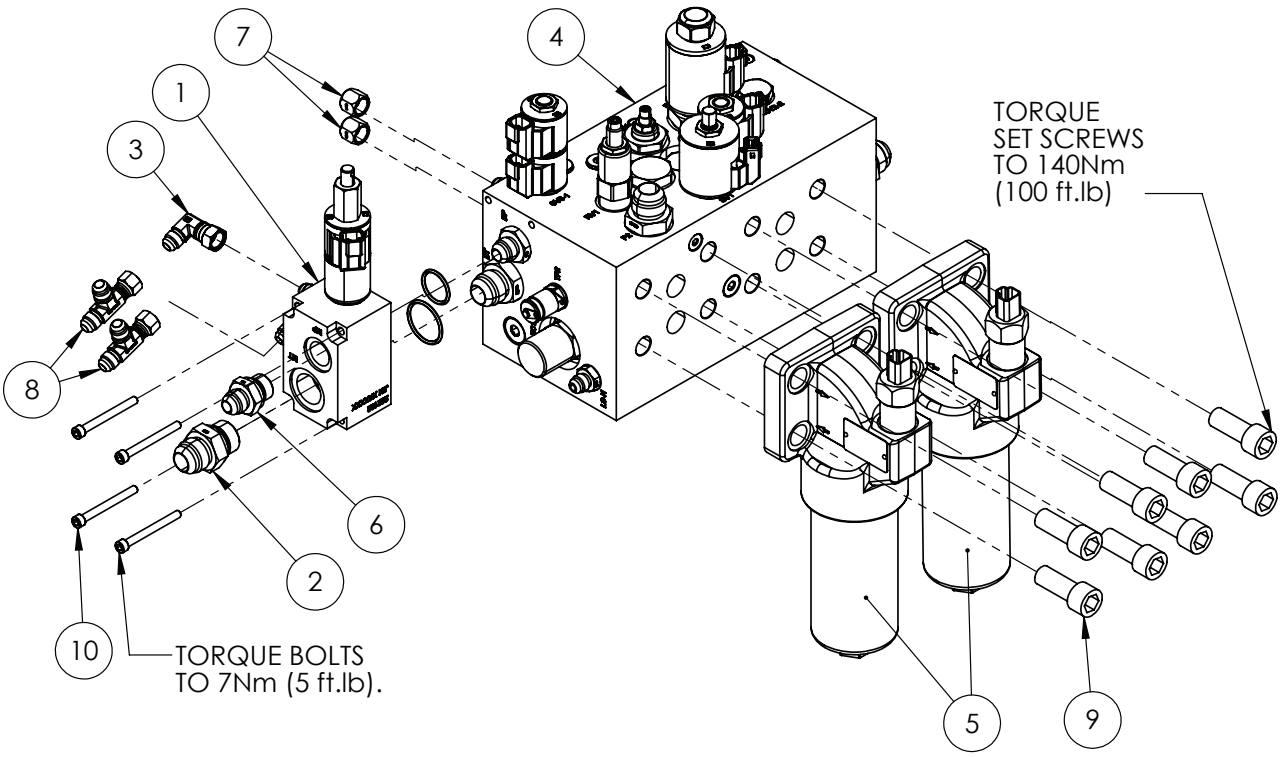

ITEM NO.	PART NUMBER	DESCRIPTION	QTY.
1	GA3501084	EXPANSION MODULE, INCL. SV08-47DM-0-N-12ER, 3-4m AXLES, G6, MY21	1
2	GA3500711	HYDRAULIC ADAPTOR NIPPLE, 3/4” BSP O-RING X 1 1/16” JIC, S74-1217	1
3	GA3500002	HYDRAULIC COUPLING, ELBOW, 90 DEGREE, 9/16” MALE JIC, 9/16” FEMALE SWIVEL JIC	1
4	GA3500678	HYDRAULIC MANIFOLD ASSEMBLY, CHASSIS CONTROL, INCLUDES STEERING PRIORITY, PUMP SPEED CONTROL AND LOAD SENSE	1
5	GA3500705	HYDRAULIC PRESSURE FILTER ASSEMBLY, 10 MICRON, 4 BOLT FLANGE MOUNT, ELECTRONIC CLOGGING INDICATOR, HYDAC	2
6	GA3500303	HYDRAULIC ADAPTER, NIPPLE, 1/2” BSPP O-RING MALE X 3/4” JIC MALE, S74-0812	1
7	GA3500793	HYDRAULIC ADAPTOR, CAP, 9/16” JIC FEMALE, S65- 09	2
8	GA3500144	HYDRAULIC ADAPTOR, TEE, 9/16” JIC MALE X 9/16” JIC MALE X 9/16” JIC FEMALE SWIVEL, S67-090909	2
9	GA5000925	SHCS M16 X 40 GR12.9 ZP	8
10	GA5070460	SHCS M6 X 60 SS A2-70	4

Manifold - Chassis

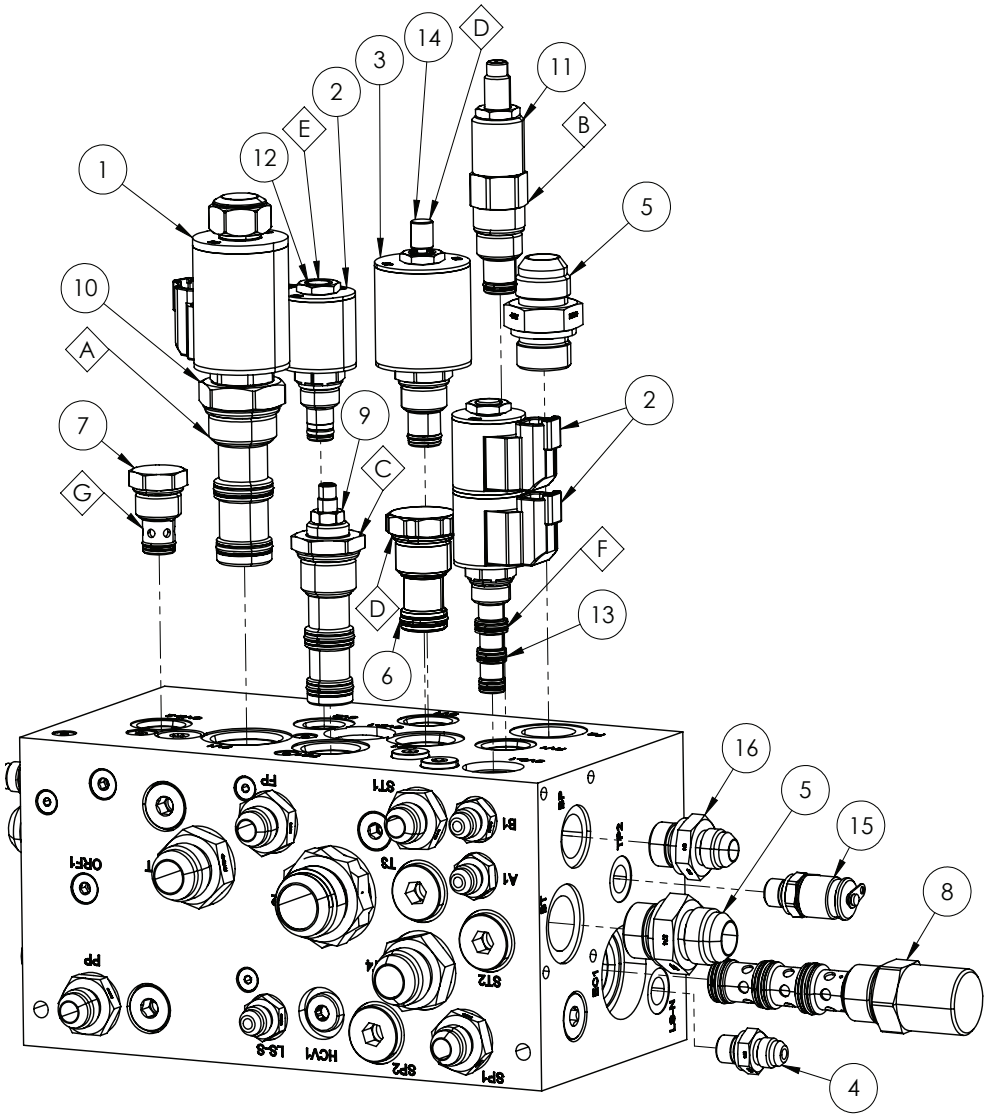

ITEM NO.	PART NUMBER	DESCRIPTION	QTY.
A	GA3500902	SEAL KIT, OILPATH, SK16-3N-MM	-
B	GA3500904	SEAL KIT, OILPATH, SK10-2N-B	-
C	GA3500908	SEAL KIT, OILPATH, SK12-3N-MM	-
D	GA3500910	SEAL KIT, OILPATH, SK10-2N-T	-
E	GA3500883	SEAL KIT, OILPATH, SK08-2N-M	-
F	GA3500894	SEAL KIT, OILPATH, SK08-4N-MMM	-
G	GA3500916	SEAL KIT, OILPATH, SK08-2N-T/B	-
1	GA3000578	COIL, 12V DC, OILPATH, 4303212	1
2	GA3000579	COIL, 12V DC, OILPATH, 4303612	3
3	GA3000577	COIL, 12V DC, OILPATH, 4303712	1
4	GA3500544	HYDRAULIC ADAPTOR NIPPLE, 1/4” BSP O-RING X 9/16” JIC, S74-0409	5
5	GA3500711	HYDRAULIC ADAPTOR NIPPLE, 3/4” BSP O-RING X 11/16” JIC, S74-1217	6

Continue Over Page

Manifold - Chassis

ITEM NO.	PART NUMBER	DESCRIPTION	QTY.
6	GA3500909	HYDRAULIC CARTRIDGE, CAVITY PLUG, OILPATH, CP12-20-N	1
7	GA3500884	HYDRAULIC CARTRIDGE, CHECK VALVE, OILPATH, CV10-20-0-N-05	2
8	GA3500905	HYDRAULIC CARTRIDGE, COMPENSATOR, PRIORITY VALVE, OILPATH, EC12-43-0-N-160-0.9	1
9	GA3500907	HYDRAULIC CARTRIDGE, PRIORITY VALVE ADJUSTABLE, OILPATH, FR12-33A-0-N/M45.0	1
10	GA3500901	HYDRAULIC CARTRIDGE, PROPORTIONAL VALVE, OILPATH, PV76-30AG-0-N-00	1
11	GA3500903	HYDRAULIC CARTRIDGE, RELIEF VALVE, OILPATH, RV10-26A-0-N-30	1
12	GA3500912	HYDRAULIC CARTRIDGE, SOLENOID VALVE, OILPATH, SV08-26-0-N-00	1
13	GA3500913	HYDRAULIC CARTRIDGE, SOLENOID VALVE, OILPATH, SV08-47C-0-N-00	1
14	GA3500911	HYDRAULIC CARTRIDGE, SOLENOID VALVE, OILPATH, SV10-20M-0-N-00	1
15	GA3500133	HYDRAULIC COUPLING, EASY TEST POINT, 1/4” BSPP	2
16	GA3500303	HYDRAULIC ADAPTER, NIPPLE, 1/2” BSPP O-RING MALE X 3/4” JIC MALE, S74-0812	5
17	GA3500847	PLUG, ORIFICE, 1/16 NPT X 0.5mm	1

Continue Over Page

Manifold - Chassis

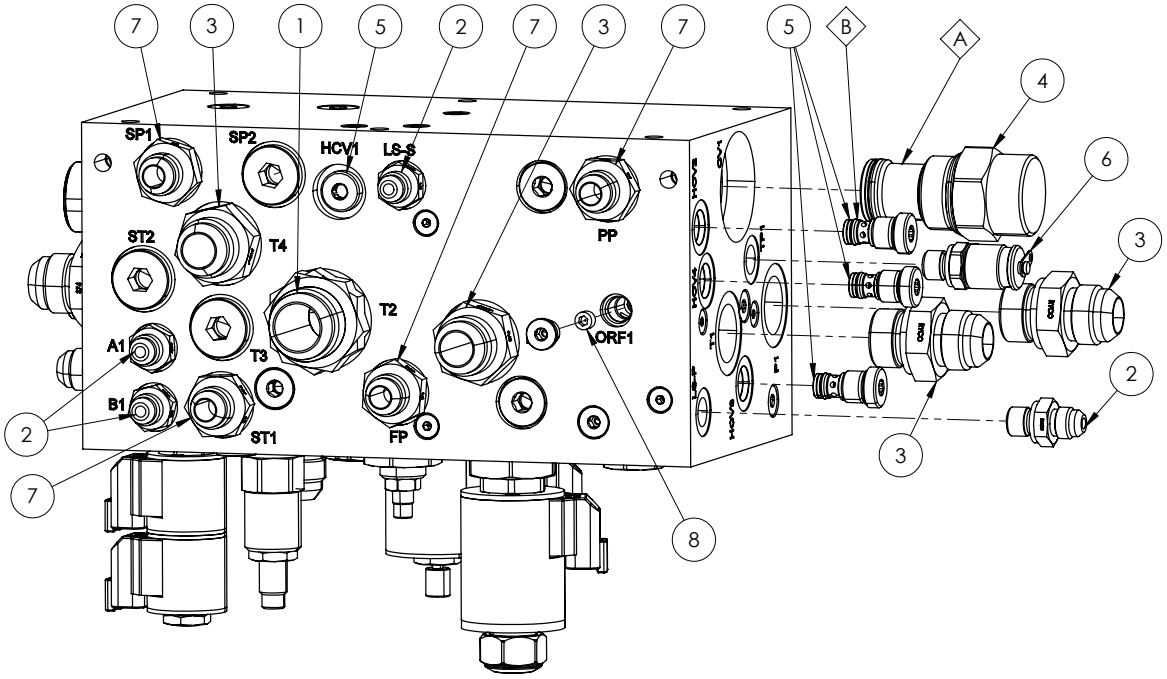

ITEM NO.	PART NUMBER	DESCRIPTION	QTY.
A	GA3500900	SEAL KIT, OILPATH, SK16-2N-T	-
B	GA3500915	SEAL KIT, OILPATH, SK06-2U-O	-
1	GA5026082	HYDRAULIC ADAPTOR NIPPLE, 1” BSP O-RING X 1 5/16” JIC, S74-1621	1
2	GA3500544	HYDRAULIC ADAPTOR NIPPLE, 1/4” BSP O-RING X 9/16” JIC, S74-0409	4
3	GA3500711	HYDRAULIC ADAPTOR NIPPLE, 3/4” BSP O-RING X 1 1/16” JIC, S74-1217	4
4	GA3500899	HYDRAULIC CARTRIDGE, CHECK VALVE, OILPATH, CV16-20T-0-N-150	1
5	GA3500914	HYDRAULIC CARTRIDGE, CHECK VALVE, OILPATH, HVC06-20-0-U-05	4
6	GA3500133	HYDRAULIC COUPLING, EASY TEST POINT, 1/4” BSPP	2
7	GA3500303	HYDRAULIC ADAPTER, NIPPLE, 1/2” BSPP O-RING MALE X 3/4” JIC MALE, S74-0812	4
8	GA3500847	PLUG, ORIFICE, 1/16 NPT X 0.5mm	1

Expansion Module - 3-4m Axles

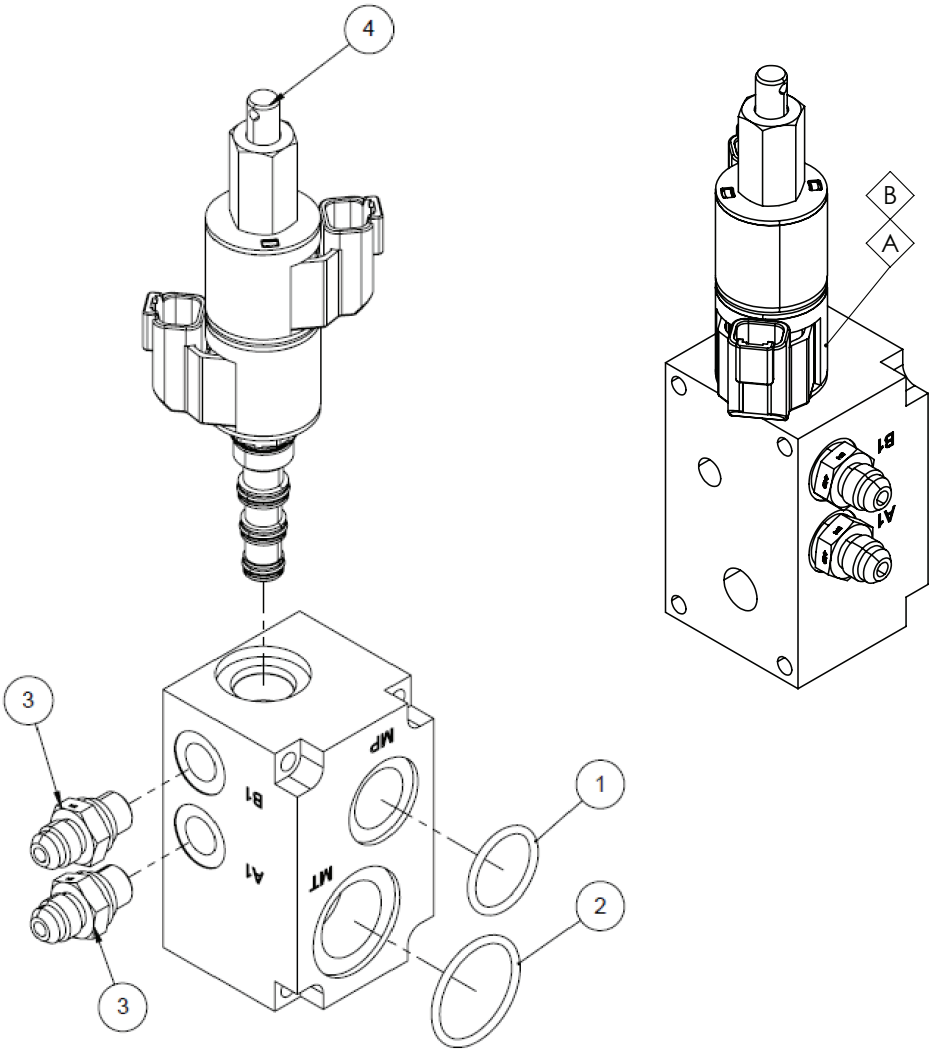

ITEM NO.	PART NUMBER	DESCRIPTI1ON	QTY.
A	GA3500894	SEAL KIT, OILPATH, SK08-4N-MMM	-
B	GA3000579	COIL, 12V DC, OILPATH, 4303612	-
1	GA5074150	O RING, BS120	1
2	GA5078662	O RING, 401196	1
3	GA3500544	HYDRAULIC ADAPTER, NIPPLE, 1/4" BSPP O-RING MALE X 9/16" JIC MALE, S74-0409	1
4	GA3500893	HYDRAULIC CARTRIDGE, SOLENOID VALVE, DCV, OILPATH, SV08-47DM-0-N-00	1

Hydraulic Pressure Filter

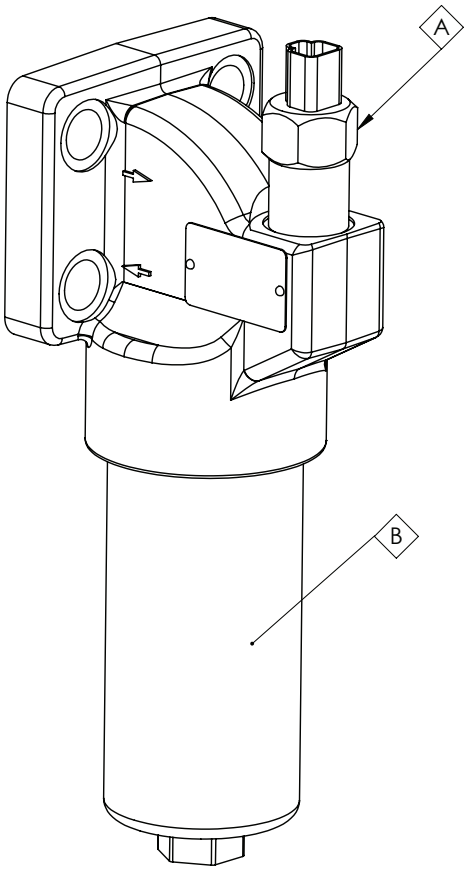

ITEM NO.	PART NUMBER	DESCRIPTION	QTY.
A	GA3000542	SENSOR, CLOGGING BLOCKING INDICATOR, SWITCH, HYDRAULIC PRESSURE FILTER, HYDAC	-
B	GA5008721	FILTER SCREEN, HYDRAULIC PRESSURE, 10 MICRON, SUIT GA5010013 & GA3500705	-

Manifold - Boom Control - 48m - Front View

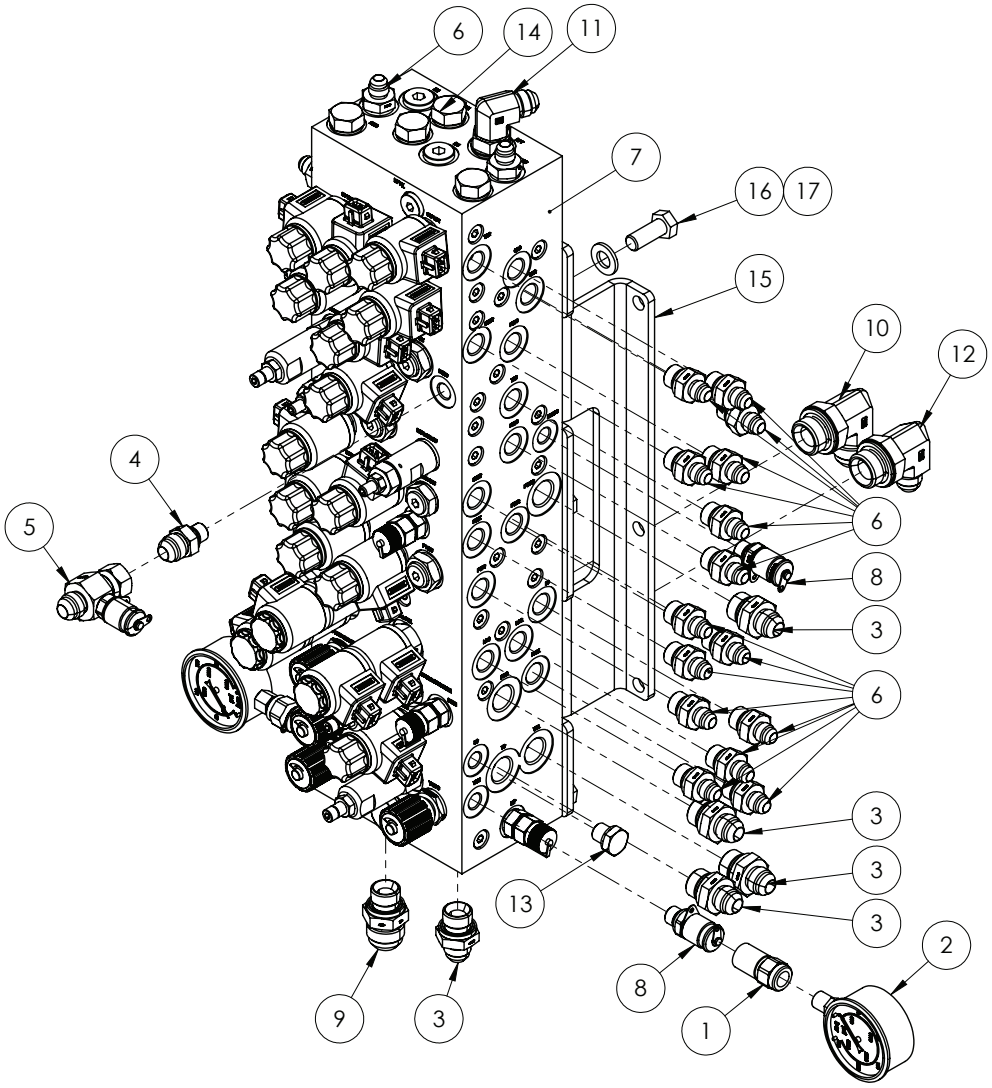

ITEM NO.	PART NUMBER	DESCRIPTION	QTY.
1	GA5077350	ADAPTOR, DIRECT GAUGE, M16 X 2.0 FEMALE X 1/4" BSPP FEMALE, C81-1604	2
2	GA5078076	GAUGE, PRESSURE, 250 BAR, 3500PSI	2
3	GA3500303	HYDRAULIC ADAPTER, NIPPLE, 1/2" BSPP O-RING MALE X 3/4" JIC MALE, S74-0812	7
4	GA3501089	HYDRAULIC ADAPTOR, 1/4" BSPP MALE X 3/4" JIC MALE, S74-0412	1
5	GA3501091	HYDRAULIC ADAPTOR, 3/4" JIC FEMALE SWIVEL X 3/4" JIC MALE X TEST POINT, S159-121216	1
6	GA3500145	HYDRAULIC ADAPTOR, NIPPLE, 3/8" BSPP O-RING MALE X 9/16" JIC MALE, S74-0609	30
7	GA3500603	HYDRAULIC CONTROL MANIFOLD, 48M BOOM, 9 CIRCUIT, HYDAC	1
8	GA3500133	HYDRAULIC COUPLING, EASY TEST POINT, 1/4" BSPP	4
9	GA3500720	HYDRAULIC ADAPTER, NIPPLE, 1/2" BSPP O-RING MALE X 1 1/16" JIC MALE, S74-0817	1

Continue Over Page

Manifold - Boom Control - 48m

ITEM NO.	PART NUMBER	DESCRIPTION	QTY.
10	GA3500900	SEAL KIT, OILPATH, SK16-2N-T	1
11	GA3500722	HYDRAULIC ADAPTOR, ELBOW, 90 DEGREE, 3/4" JIC MALE X 1/2" BSPP MALE O-RING, S76-0812	1
12	GA3500733	HYDRAULIC ADAPTOR, ELBOW, 90 DEGREE, 3/4" JIC MALE X 3/4" BSPP MALE O-RING, S76-1212	1
13	GA3500299	HYDRAULIC ADAPTOR, PLUG, 1/4" BSPP MALE, S73-04	1
14	GA3500300	HYDRAULIC ADAPTOR, PLUG, 3/8" BSPP MALE, S73-06	4
15	GA4406405	PLATE, MOUNT, HYDRAULIC MANIFOLD, 48M BOOM, CENTRE SECTION	1
16	GA5000305	SET SCREW M12 X 30 GR8.8 ZP	6
17	GA5000577	WASHER 12MM FLAT SS HD	6

Manifold - Boom Control - 48m - Rear View

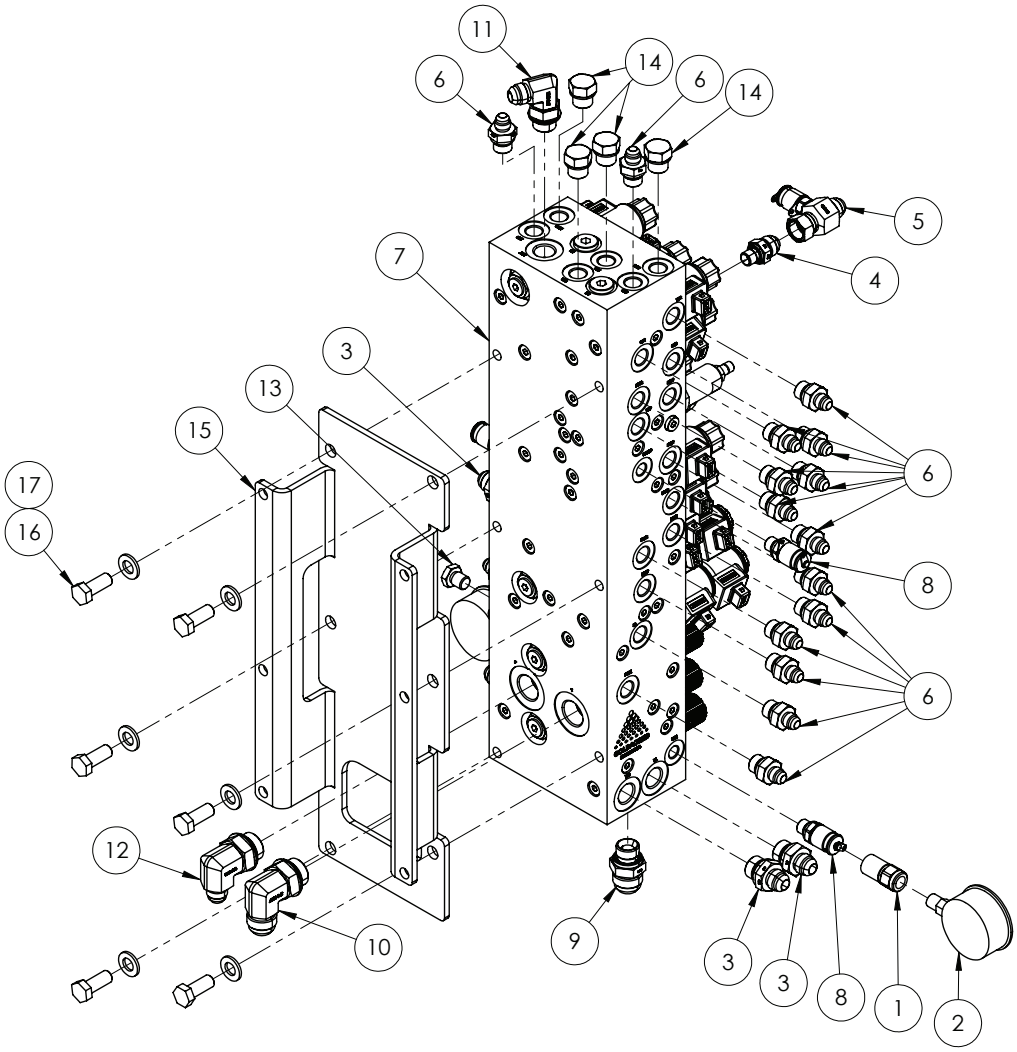

ITEM NO.	PART NUMBER	DESCRIPTION	QTY.
1	GA5077350	ADAPTOR, DIRECT GAUGE, M16 X 2.0 FEMALE X 1/4" BSPP FEMALE, C81-1604	2

Continue Over Page

Manifold - Boom Control - 48m - Rear View

ITEM NO.	PART NUMBER	DESCRIPTION	QTY.
2	GA5078076	GAUGE, PRESSURE, 250 BAR, 3500PSI	2
3	GA3500303	HYDRAULIC ADAPTER, NIPPLE, 1/2" BSPP O-RING MALE X 3/4" JIC MALE, S74-0812	7
4	GA3501089	HYDRAULIC ADAPTOR, 1/4" BSPP MALE X 3/4" JIC MALE, S74-0412	1
5	GA3501091	HYDRAULIC ADAPTOR, 3/4" JIC FEMALE SWIVEL X 3/4" JIC MALE X TEST POINT, S159-121216	1
6	GA3500145	HYDRAULIC ADAPTOR, NIPPLE, 3/8" BSPP O-RING MALE X 9/16" JIC MALE, S74-0609	30
7	GA3500603	HYDRAULIC CONTROL MANIFOLD, 48M BOOM, 9 CIRCUIT, HYDAC	1
8	GA3500133	HYDRAULIC COUPLING, EASY TEST POINT, 1/4" BSPP	4
9	GA3500720	HYDRAULIC ADAPTER, NIPPLE, 1/2" BSPP O-RING MALE X 1 1/16" JIC MALE, S74-0817	1
10	GA3500900	SEAL KIT, OILPATH, SK16-2N-T	1
11	GA3500722	HYDRAULIC ADAPTOR, ELBOW, 90 DEGREE, 3/4" JIC MALE X 1/2" BSPP MALE O-RING, S76-0812	1
12	GA3500733	HYDRAULIC ADAPTOR, ELBOW, 90 DEGREE, 3/4" JIC MALE X 3/4" BSPP MALE O-RING, S76-1212	1
13	GA3500299	HYDRAULIC ADAPTOR, PLUG, 1/4" BSPP MALE, S73-04	1
14	GA3500300	HYDRAULIC ADAPTOR, PLUG, 3/8" BSPP MALE, S73-06	4
15	GA4406405	PLATE, MOUNT, HYDRAULIC MANIFOLD, 48M BOOM, CENTRE SECTION	1
16	GA5000305	SET SCREW M12 X 30 GR8.8 ZP	6
17	GA5000577	WASHER 12MM FLAT SS HD	6

Manifold - Boom Control - 48m, (Cartridges & Coils)

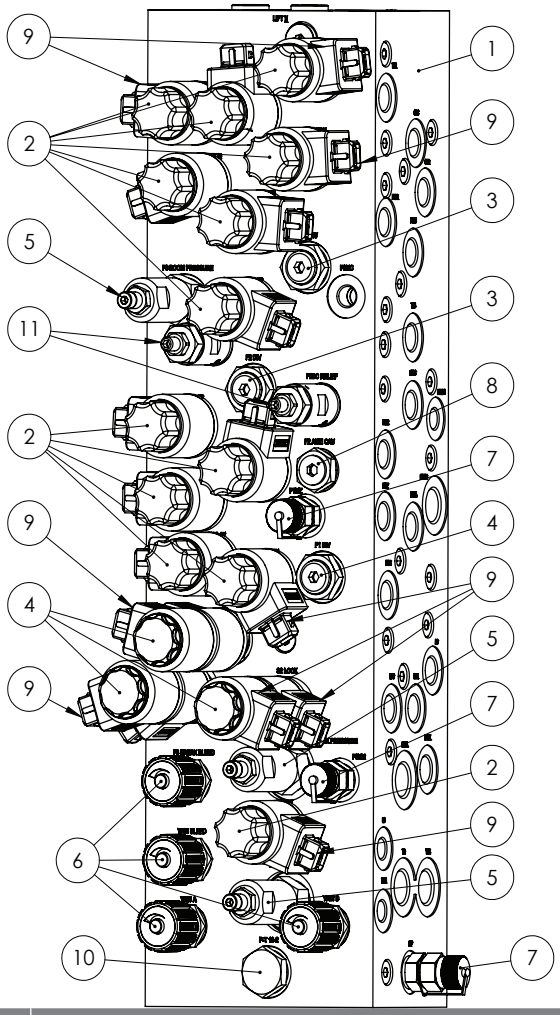

ITEM NO.	PART NUMBER	DESCRIPTION	QTY.
1	GA3500603	HYDRAULIC CONTROL MANIFOLD, 48M BOOM, 9 CIRCUIT, HYDAC	1
2	GA3500935	HYDRAULIC CARTRIDGE, POPPET VALVE, HYDAC, WSM06020W-01-C-N-0	13
3	GA3500934	HYDRAULIC CARTRIDGE, FLOW DIVIDER, HYDAC, ST10-01-C-N-11, 562884	3
4	GA3501808	HYDRAULIC FLOW DIVIDER/COMBINER, HYDAC, ST10-01-C-N-22, 562885	1
5	GA3501669	PRESSURE REDUCING VALVE, HYDAC, SCREW-IN CARTRIDGE, 3120534	3
6	GA3501671	HYDRAULIC NEEDLE VALVE, HYDAC, DV5E-01-X, 710300	4
7	GA3501672	TEST PORT, HYDRAULIC, HYDAC, ISO-228-G 1/4", 680107	3
8	GA3501673	HYDRAULIC CARTRIDGE, DIRECT ACTING, POPPET, HYDAC, RV08A-01-C-N-05, 560084	5
9	GA5056515	COIL, 12V DC, HYDAC, 12DN-40-1836, 3012600	19
10	GA3501674	HYDRAULIC CAVITY PLUG, HYDAC, FP102-0-N, 3014157	1
11	GA3501675	RELIEF VALVE POPPET, DIRECT ACTING, DB4E-01X-250V, 716143	2

Manifold - Boom Control - 48m (Function Table)

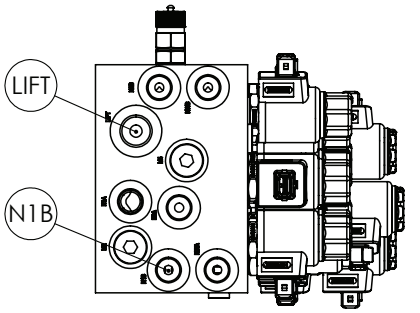

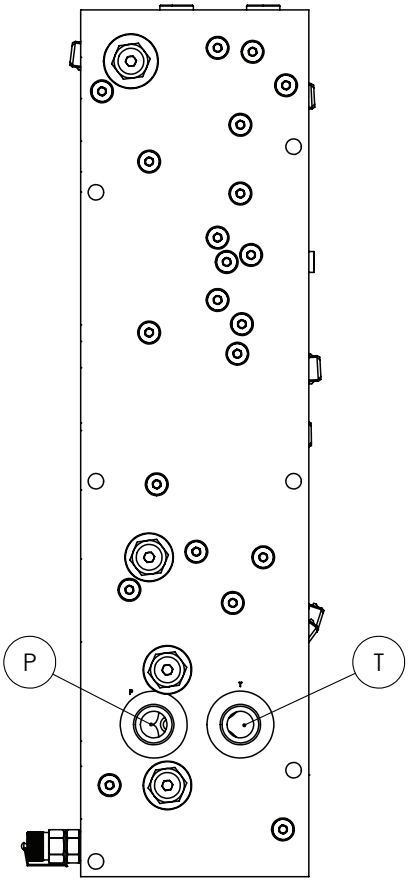

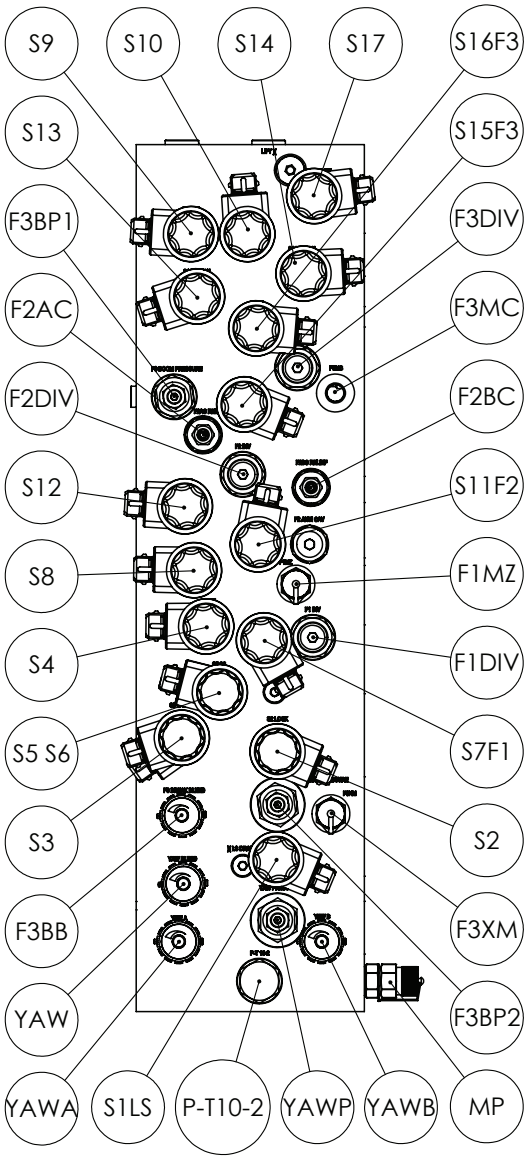

ITEM NO.	DESCRIPTION
S1LS	HYDRAULIC YAW
S2	CENTRE LOCK
S3	BOOM LATCH
S4	FIRSTSTAGE FOLD - RETURN
S5 S6	BOOM OPERATIONS (MASTER)
S7F1	FIRST STAGE FOLD - RIGHT HAND SIDE
S8	FIRST STAGE FOLD - LEFT HAND SIDE
S9	BOOM TILT - RIGHT HABD SIDE
S10	BOOM TILT - LEFT HAND SIDE
S11F2	SECOND STAGE FOLD

ITEM NO.	DESCRIPTION
S12	SECOND STAGE FOLD - LEFT HAND SIDE
S13	BOOM CATCH - RIGHT HAND SIDE
S14	BOOM CATCH - LEFT HAND SIDE
S15F3	THIRD STAGE FOLD - RIGHT HAND SIDE
S16F3	THIRD STAGE FOLD - LEFT HAND SIDE
S17	BOOM LIFT
F1DIV	FIRST STAGE FOLD FLOW DIVIDER
F1MZ	FIRTS STAGE FOLD TEST PORT

Continue Over Page

Manifold - Boom Control - 48m (Function Table)

ITEM NO.	DESCRIPTION
F2AC	SECOND STAGE FOLD - RIGHT HAND SIDE PRESSURE RELIEF
F2BC	SECOND STAGE FOLD - LEFT HAND SIDE PRESSURE RELIEF
F2DIV	SECOND STAGE FOLD FLOW DIVIDER
F3BB	THIRD STAGE FOLD BREAK BLEED
F3BP1	THIRD STAGE FOLD BOOM PRESSURE
F3BP2	THIRD STAGE BREAK PRESSURE
F3DIV	THIRD STAGE FOLD FLOW DIVIDER
F3MC	THIRD STAGE FOLD ACCUMULATOR
F3XM	THIRD STAGE FOLD TEST PORT

ITEM NO.	DESCRIPTION
LIFT	LIFT CYLINDERS
N1B	RAVEN ULTRAGLIDE XRT
MP	TEST PORT
P-T10-2	RAVEN ULTRAGLIDE XRT
YAW	YAW BLEED
YAW A	YAW CONTROL - RIGHT HAND SIDE
YAW B	YAW CONTROL - LEFT HAND SIDE
YAW P	YAW PRESSURE
P	RAVEN ULTRAGLIDE XRT - LEFT HAND SIDE
T	RAVEN ULTRAGLIDE XRT - RIGHT HAND SIDE

Manifold - Boom Control - 36-42m

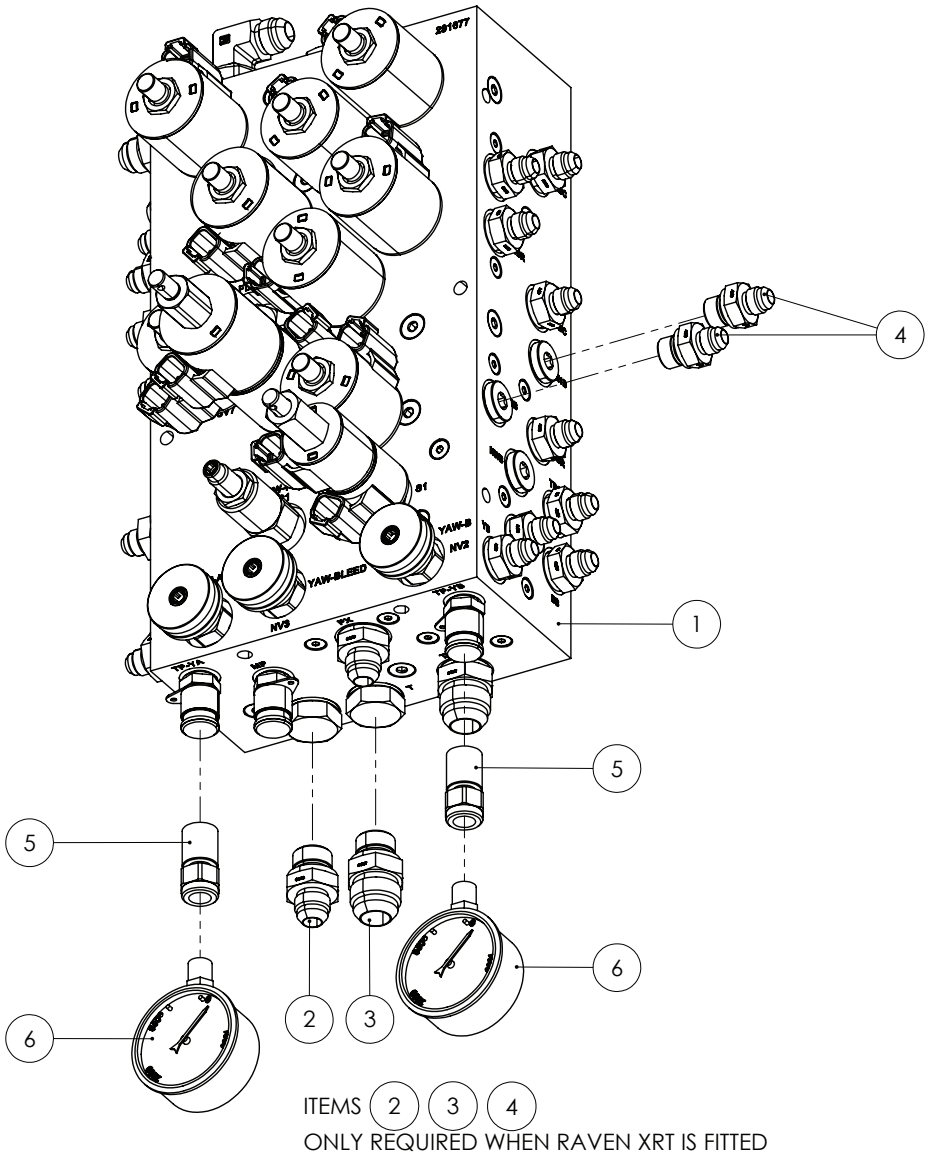

ITEM NO.	PART NUMBER	DESCRIPTION	QTY.
1	GA3500677	HYDRAULIC MANIFOLD ASSEMBLY, BOOM CONTROL SUIT 36M AND 42M	1
2	GA3500303	HYDRAULIC ADAPTER, NIPPLE, 1/2” BSPP O-RING MALE X 3/4” JIC MALE	1
3	GA3500720	HYDRAULIC ADAPTER, NIPPLE, 1/2” BSPP O-RING MALE X 1 1/16” JIC MALE	1
4	GA3500145	HYDRAULIC ADAPTOR, NIPPLE, 3/8” BSPP O-RING MALE X 9/16” JIC MALE	2
5	GA5077350	ADAPTOR, DIRECT GAUGE, M16 X 2.0 FEMALE X 1/4” BSPP FEMALE, C81-1604	2
6	GA5021455	HYDRAULIC PRESSURE GAUGE, 3500PSI, 63MM, 1/4” BSPT MALE THREAD	2

Manifold - Boom Control - 36-42m

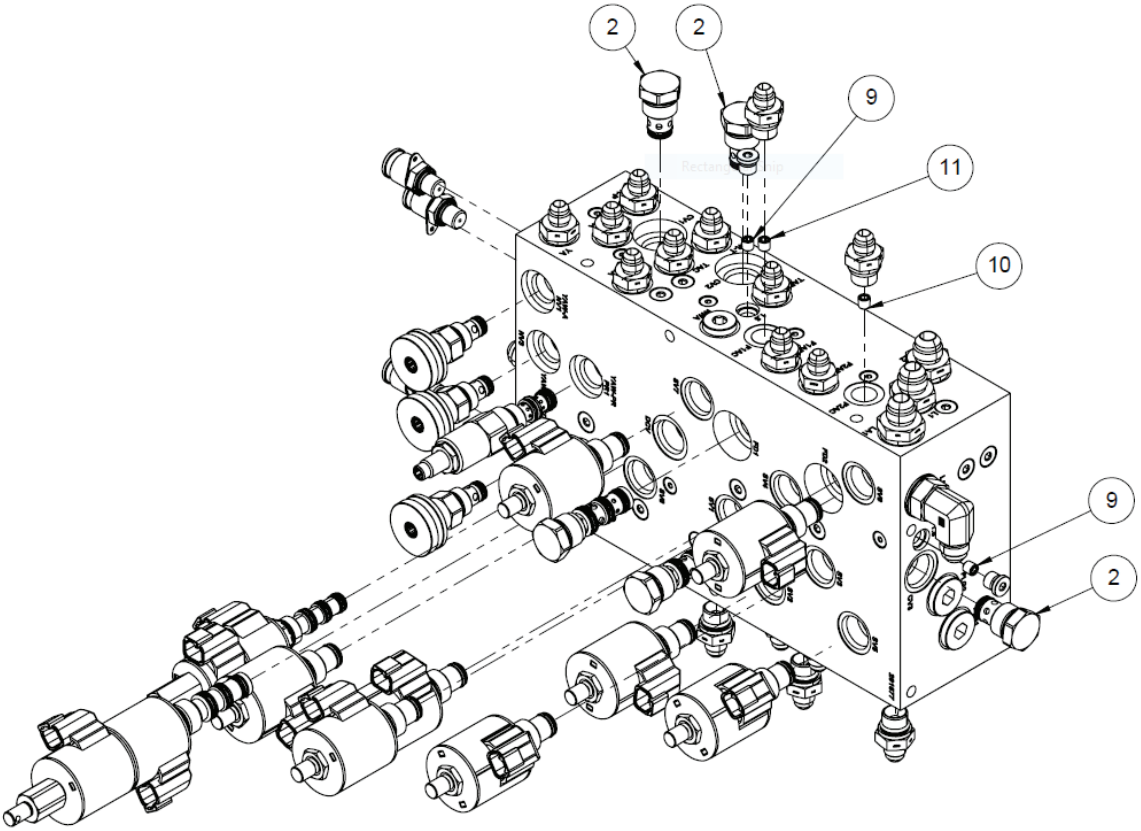

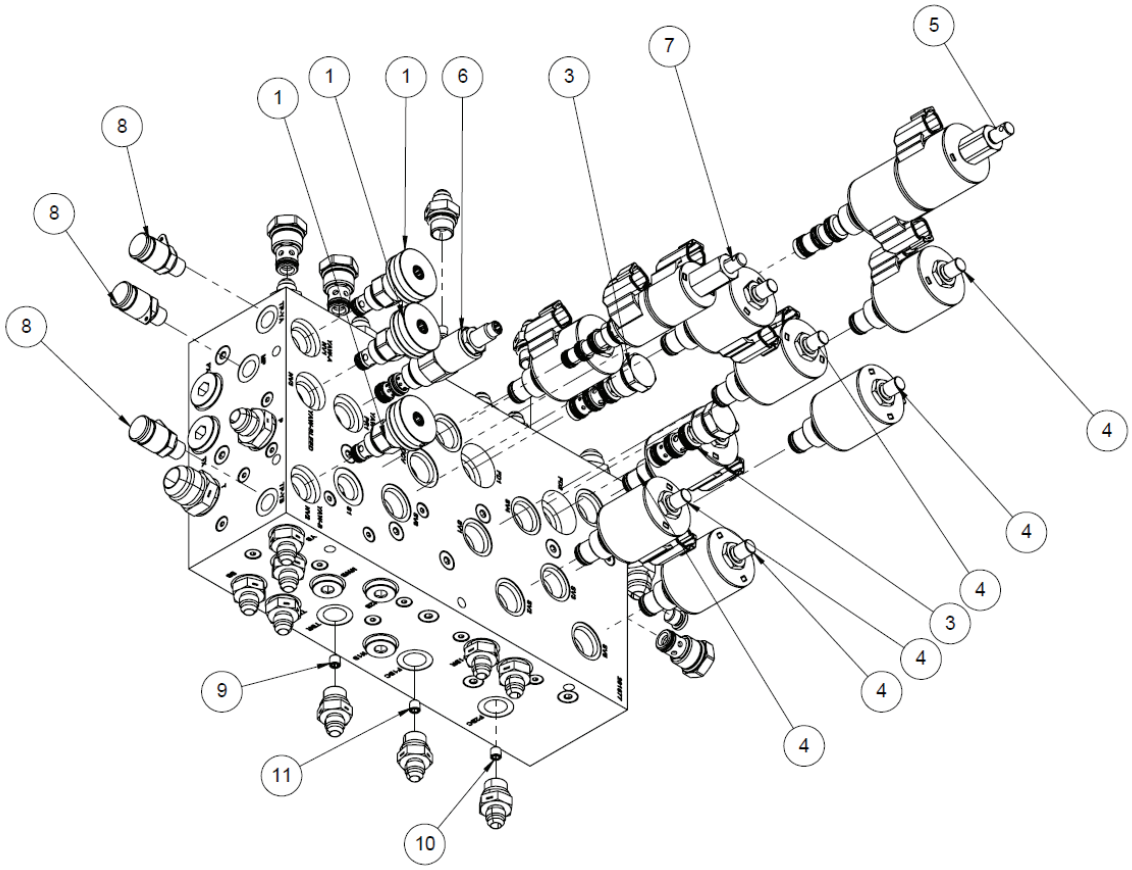

Manifold - Boom Control - 36-42m

ITEM NO.	PART NUMBER	DESCRIPTION	QTY.
1	GA3500882	HYDRAULIC CARTRIDGE, NEEDLE VALVE, OILPATH, NV08-23B-0-N	3
1.1	GA3500883	SEAL KIT, OILPATH, SK08-2N-M	
2	GA3500884	HYDRAULIC CARTRIDGE, CHECK VALVE, OILPATH, CV10-20-0-N-05	3
2.1	GA3500885	SEAL KIT, OILPATH, SK-2N-T	
3	GA3500886	HYDRAULIC CARTRIDGE, FLOW DIVIDER, OILPATH, FD50-45-0-N-22	2
3.1	GA3500887	SEAL KIT, OILPATH, SK10-4N-MMM	
4	GA3500888	HYDRAULIC CARTRIDGE, SOLENOID VALVE, OILPATH, SV10-28M-0-N-00	8
4.1	GA3500889	SEAL KIT, OILPATH, SK10-2N-M	
4.2	GA3000577	COIL, 12V DC, OILPATH, 4303712	
5	GA3500890	HYDRAULIC CARTRIDGE, SOLENOID VALVE, DCV, OILPATH, HSV10-47DM-0-U-00	1
5.1	GA3500887	SEAL KIT, OILPATH, SK10-4N-MMM	
5.2	GA3000577	COIL, 12V DC, OILPATH, 4303712	
6	GA3500891	HYDRAULIC CARTRIDGE, PRESSURE REDUCING VALVE, OILPATH, PR08-32A-0-N-22	1
6.1	GA3500892	SEAL KIT, OILPATH, SK08-3N-BM	
7	GA3500893	HYDRAULIC CARTRIDGE, SOLENOID VALVE, DCV, OILPATH, SV08-47DM-0-N-00	1
7.1	GA3500894	SEAL KIT, OILPATH, SK08-4N-MMM	
7.2	GA3000579	COIL, 12V DC, OILPATH, 4303612	
8	GA3500133	HYDRAULIC COUPLING, EASY TEST POINT, 1/4" BSPP	3
9	GA3500853	ORIFICE PLUG, 1/16", 1.5MM	3
10	GA3500896	ORIFICE PLUG, 1/16", 0.6MM	2
11	GA3500849	ORIFICE PLUG, 1/16", 0.8MM	2

Manifold - Raven XRT 5 Assembly

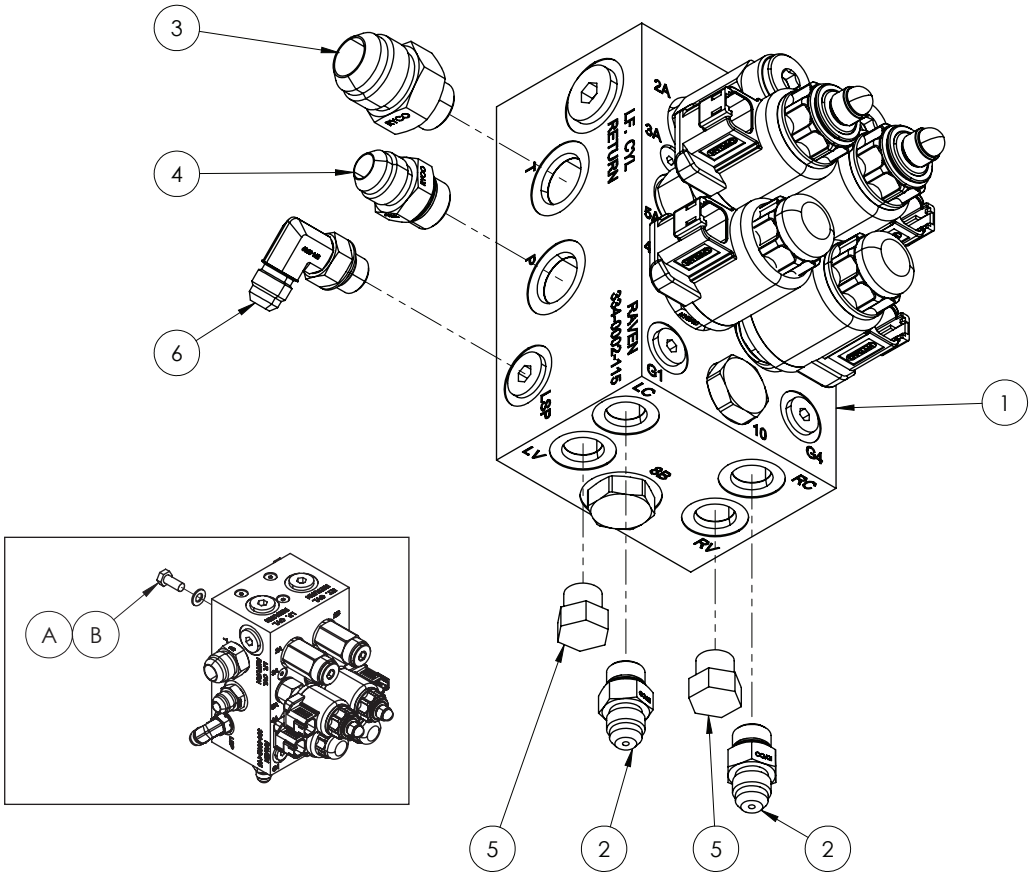

ITEM NO.	PART NUMBER	DESCRIPTION	QTY.
A	GA5003643	WASHER 8MM FLAT SS HD	3
B	GA5048485	SET SCREW 5/16" BSW X 3/4" SS A2-70	3
1	GA3000385	VALVE, HYDRAULIC, RAVEN XRT ULTRAGLIDE, LOAD SENSE	1
2	GA3500146	HYDRAULIC ADAPTOR, NIPPLE, 9/16” JIC MALE X 9/16” UN MALE O-RING	2
3	GA3500738	HYDRAULIC ADAPTOR, NIPPLE, 1 1/16” JIC MALE X 3/4” UN MALE O-RING	1
4	GA3500739	HYDRAULIC ADAPTOR, NIPPLE, 3/4” JIC MALE X 3/4” UN MALE O-RING	1
5	GA3500380	HYDRAULIC ADAPTOR, PLUG, 9/16” UN MALE O-RING	2
6	GA3500716	HYDRAULIC ADAPTOR, ELBOW, 90 DEGREE, 9/16” JIC MALE X 9/16” UN MALE O-RING	1

Manifold - Raven XRT 5 Manifold

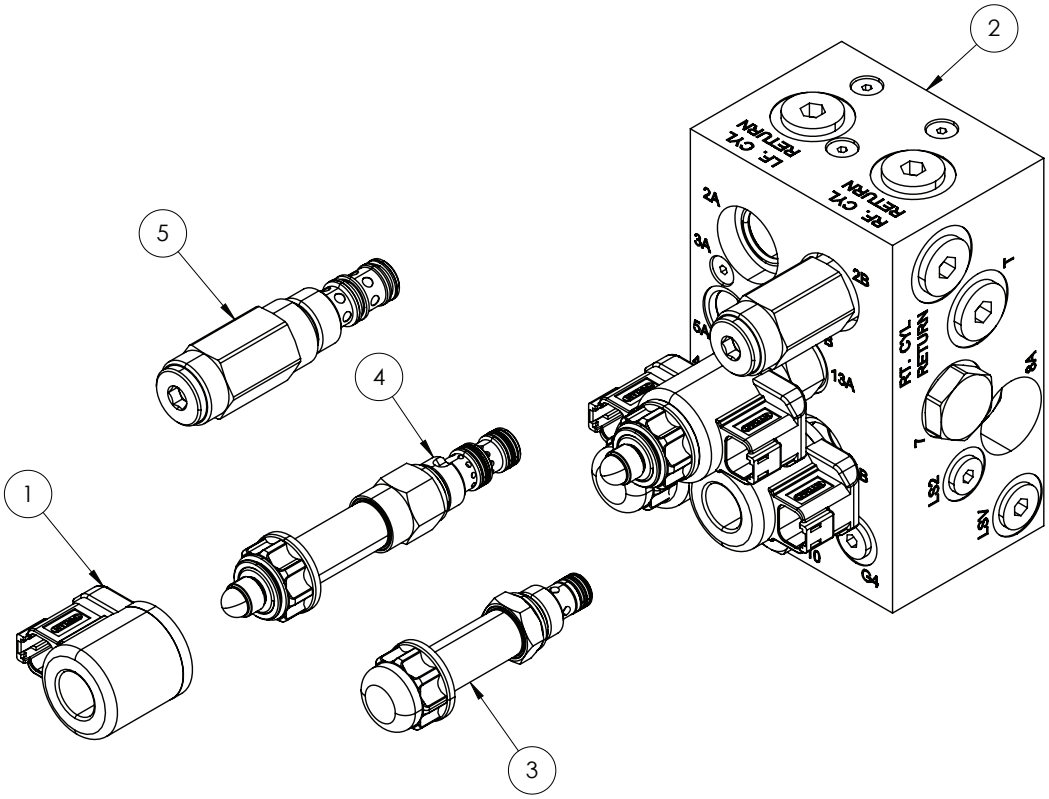

ITEM NO.	PART NUMBER	DESCRIPTION	QTY.
1	GA3000847	COIL, 12V DC, DEUSTCH, CONNECTOR, XRT, 133400021 18	4
2	GA3000385	VALVE, HYDRAULIC, RAVEN XRT ULTRAGLIDE, LOAD SENSE, 334-0235-002	1
3	GA5076857	VALVE, CARTRIDGE HYDRAULIC BLOCKER DBL 08, RAVEN, 3340002107	2
4	GA5076856	VALVE, CARTRIDGE HYDRAULIC PROPORTIONAL RDC/ RLVG 08, RAVEN ULTRAGLIDE, 133400021 06	2
5	GA5076858	VALVE, CARTRIDGE HYDRAULIC SEQUENCE 10, RAVEN, 3340002108	2

Boom Lift Accumulator Lockout

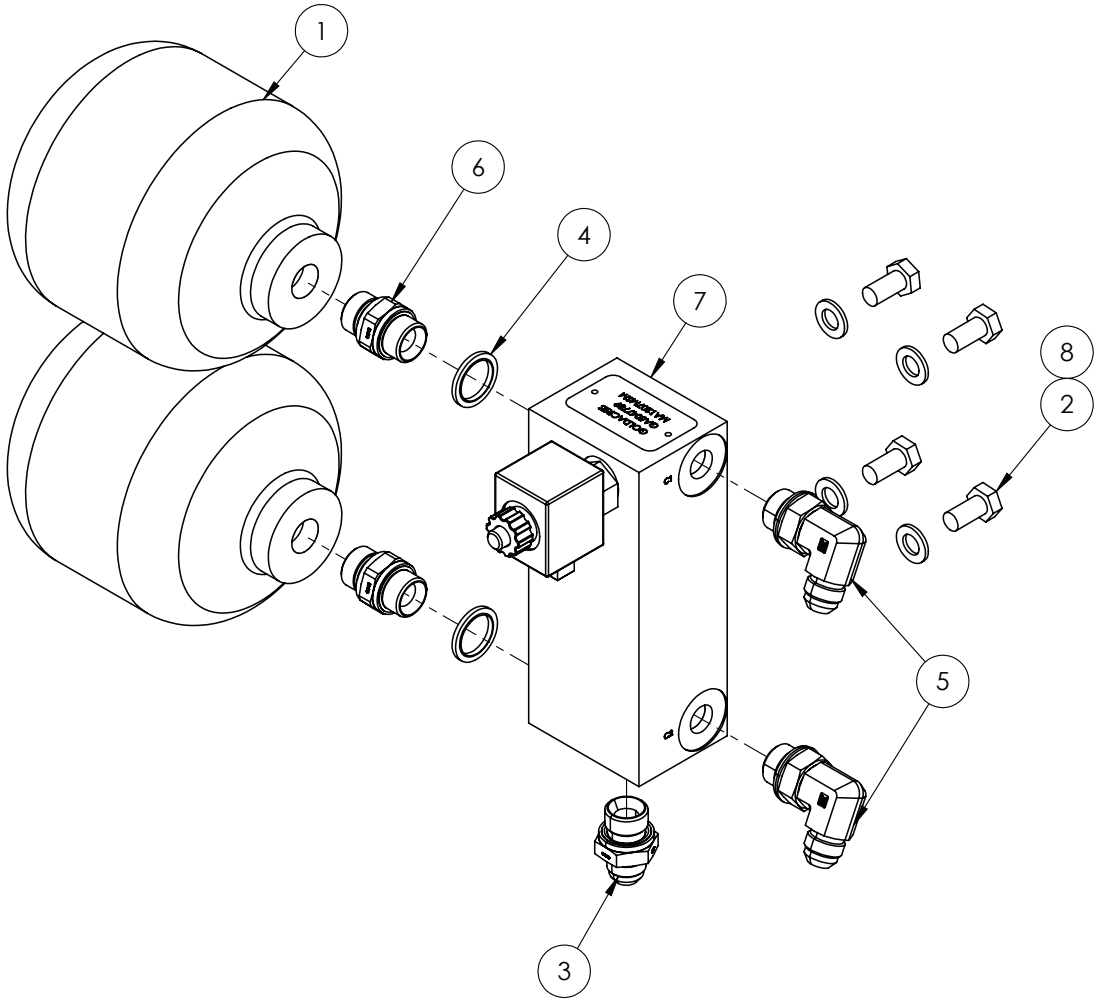

ITEM NO.	PART NUMBER	DESCRIPTION	QTY.
-	GA5047730	VALVE CARTRIDGE HYD SOL POPPET NC-12V WITH OVERIDE PLUS BODY	1
1	GA5007787	ACCUMULATOR 1.0L PRECHARGE 70 BAR	2
2	GA5006113	BOLT M10X20 ZP 8.8	4
3	GA3500303	HYDRAULIC ADAPTOR NIPPLE, 1/2” BSPP TO 3/4” JIC	1
4	GA3500159	HYDRAULIC SEAL, BONDED, 1/2”, RL21D-08	2
5	GA3500722	HYDRAULIC ADAPTOR, ELBOW, 90 DEGREE, 3/4” JIC MALE X 1/2” BSPP MALE O-RING, S76-0812	2
6	GA3500253	HYDRAULIC ADAPTOR, NIPPLE, 1/2” BSPP MALE X 1/2” BSPP MALE, S46-0808	2
7	GA5047789	MANIFOLD, HYDRAULIC, ACCUMULATOR LOCKOUT MY14	1
8	GA5000117	WASHER 10mm FLAT SS HD	4

Boom Bi-Fold Breakaway

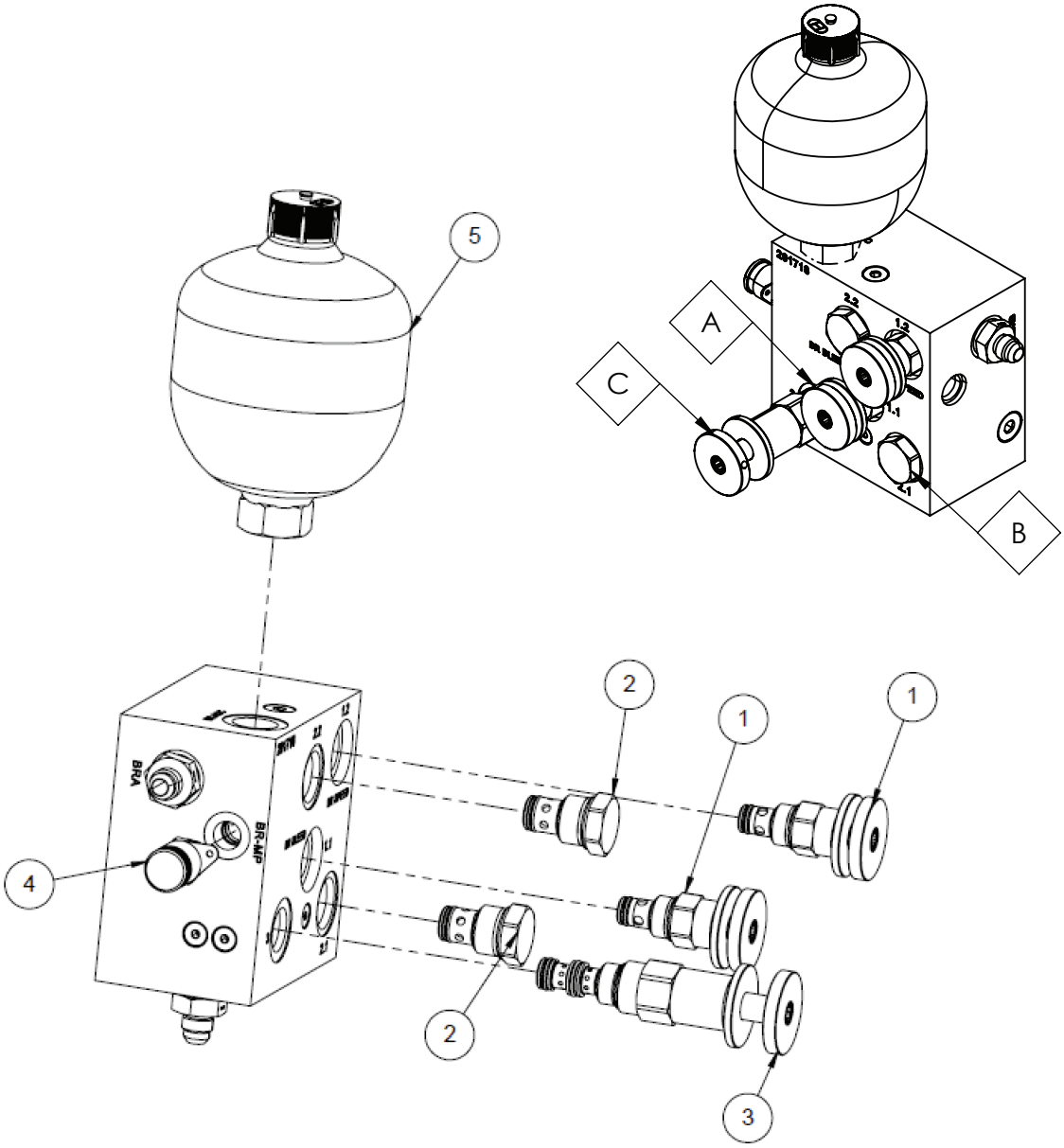

ITEM NO.	PART NUMBER	DESCRIPTION	QTY.
A	GA3500889	SEAL KIT, OILPATH, SK10-2N-M	-
B	GA3500910	SEAL KIT, OILPATH, SK10-2N-T	-
C	GA3500892	SEAL KIT, OILPATH, SK08-3N-BM	-
1	GA3500882	HYDRAULIC CARTRIDGE, NEEDLE VALVE, OILPATH, NV08-23B-0-N	2
2	GA3500884	HYDRAULIC CARTRIDGE, CHECK VALVE, OILPATH, CV10-20-0-N-05	2
3	GA3501144	HYDRAULIC CARTRIDGE, PRESSURE REDUCING VALVE, OILPATH, PR08-32B-0-N-22-M100	1
4	GA3500133	HYDRAULIC COUPLING, EASY TEST POINT, 1/4" BSPP	1
5	GA3500929	HYDRAULIC ACCUMULATOR, 0.5L, 90BAR, OILPATH, 484013	1

Cylinder - Boom Rest 36-42m

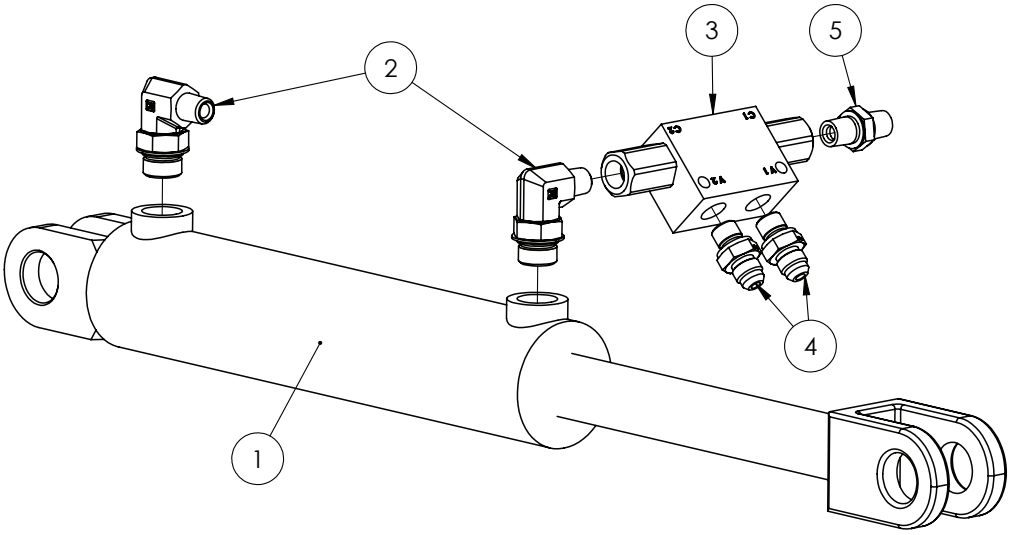

Quantities shown are per side.

ITEM NO.	PART NUMBER	DESCRIPTION	QTY.
-	GA5052745	SEAL KIT, SUIT 2” BORE X 1 1/4” ROD, SUIT GA5060816, GA5060817, GA5069110, HYPOWER BRAND ONLY	-
-	GA3501788	SEAL KIT, SUIT, HYDRAULIC CYLINDER, GA5069110, “BICELLI GECO” BRAND ONLY	-
1	GA5069110	HYDRAULIC CYLINDER, BORE 2”, ROD 1.25”, STROKE 6”	1
2	GA3500348	HYDRAULIC ADAPTOR, ELBOW, 90 DEGREE, 1/4” BSPT MALE X 3/4” UN MALE O-RING	2
3	GA5007957	DOUBLE PILOT CHECK (RA) 12LPM 1/4" BSPP	1
4	GA3500544	HYDRAULIC ADAPTER, NIPPLE, 1/4” BSPP O-RING MALE X 9/16” JIC MALE	2
5	GA4562025	RESTRICTOR NIPPLE 1/4” BSPT 0.5MM ORIFICE	1

Cylinder - Boom Lift

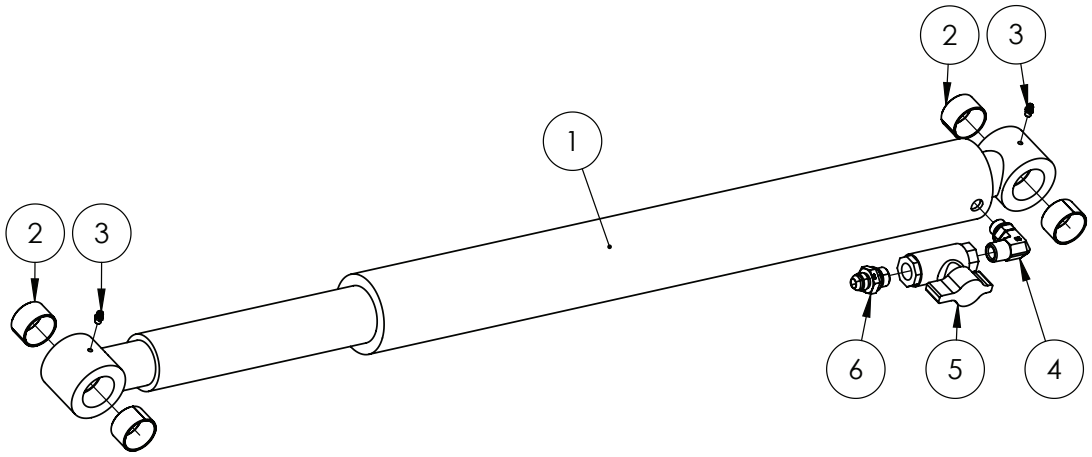

ITEM NO.	PART NUMBER	DESCRIPTION	QTY.
-	GA3501576	SEAL KIT, HYDRAULIC CYLINDER, SUIT, GA3500682 & GA3500593, “BICELLI GECO” BRAND ONLY	-
-	GA5052731	SEAL KIT, SUIT 3” BORE X 2 1/2” ROD, SUITS GA5070081, GA5070079 , GA3500669 , GA3500593, HYPOWER BRAND ONLY	-
1	GA3500593	HYDRAULIC CYLINDER, DISPLACEMENT, 3” BORE, 2.5” ROD, 26” STROKE SUIT 1.5” PINS	1
2	GA1700027	BEARING, GLACIER BUSH, 1 1/2” ID X 1” LONG	4
3	GA5012203	GREASE NIPPLE, SHORT, 1/4” UNF	2
4	GA3500349	HYDRAULIC ADAPTOR, ELBOW, 90 DEGREE, 1/2” BSPT MALE X 3/4” UN MALE O-RING	1
5	GA5000835	VALVE, BALL, HYDRAULIC, 1/2” FEMALE THREAD INLET / OUTLET	1
6	GA3500303	HYDRAULIC ADAPTER, NIPPLE, 1/2” BSPP O-RING MALE X 3/4” JIC MALE	1

Cylinder - Yaw 36m

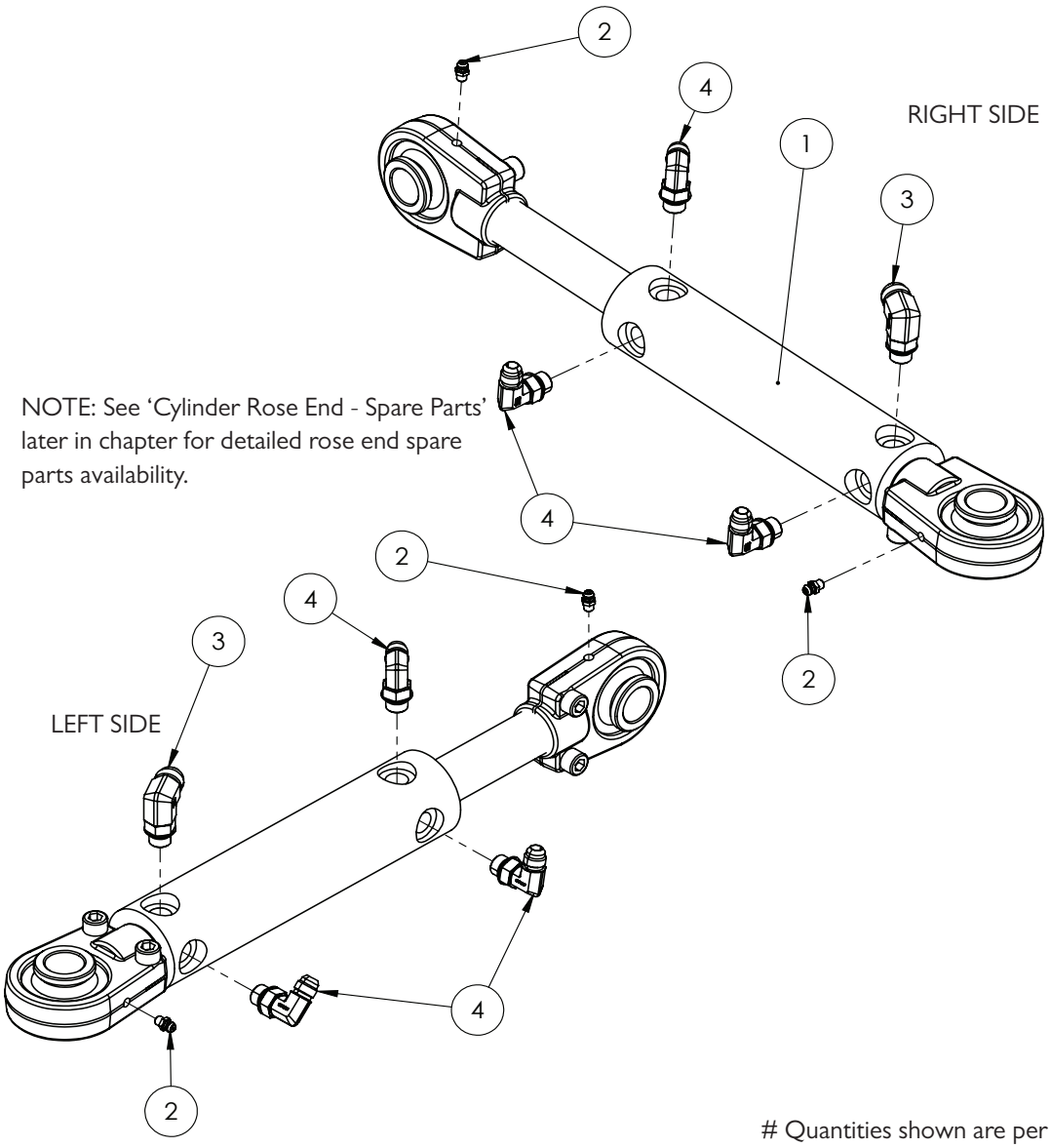

Quantities shown are per side.

ITEM NO.	PART NUMBER	DESCRIPTION	QTY.
-	GA5052745	SEAL KIT, SUIT 2" BORE X 1 1/4" ROD, SUIT GA5060816, GA5060817, GA5069110, HYPOWER BRAND ONLY	-
-	GA3500811	SEAL KIT, HYDRAULIC CYLINDER, 2" X 1.25" ROD, SUIT PTE ONLY GA5060817	-
-	GA5074330	SEAL KIT, SUIT, HYDRAULIC YAW CYLINDER, 2" X 1.25", MOTUS GA5060817	-
1	GA5060817	HYDRAULIC CYLINDER, 2" BORE X 1 1/4" ROD X 117.5MM STROKE, SPHERICAL BEARING ENDS	2
2	GA5012203	GREASE NIPPLE, SHORT, 1/4" UNF	4
3	GA3500802	HYDRAULIC ADAPTOR, ELBOW, 90 DEGREE, 3/4" JIC MALE X 9/16" UN MALE O-RING, S91-1209	2
4	GA3500716	HYDRAULIC ADAPTOR, ELBOW, 90 DEGREE, 9/16" JIC MALE X 9/16" UN MALE O-RING, S91-0909	6

Cylinder - Yaw 42-48m

NOTE: See 'Cylinder Rose End - Spare Parts' later in chapter for detailed rose end spare parts availability.

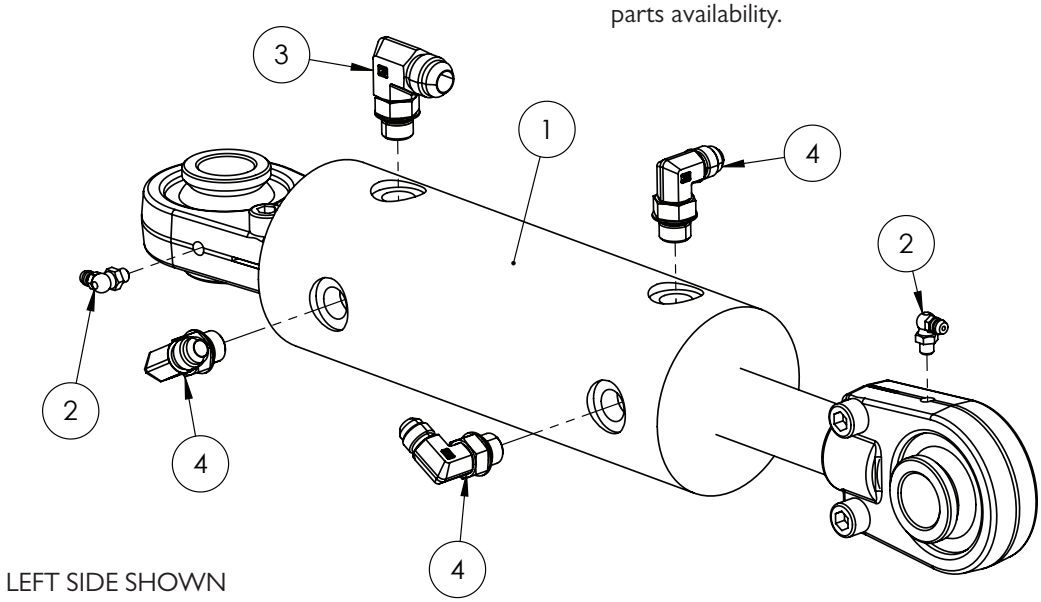

LEFT SIDE SHOWN

Quantities shown are per side.

ITEM NO.	PART NUMBER	DESCRIPTION	QTY.
-	GA5052732	SEAL KIT, SUIT 3" BORE X 1 1/4" ROD, SUIT GA5060818	-
-	GA5052680	SEAL KIT, SUIT 3" BORE X 1 1/4" ROD, SUIT GA5018538, GA5018540, GA5060818, HYPOWER BRAND ONLY	-
-	GA3501270	SEAL KIT, SUIT, HYDRAULIC CYLINDER, GA5018540 & GA5060818, "MOTUS", SK300125	-
1	GA5060818	HYDRAULIC CYLINDER, 3" BORE X 1 1/4" ROD X 117 .5MM STROKE, WITH BEARING ENDS	1
2	GA5009637	GREASE NIPPLE, ELBOW, 90 DEGREE, 1/4" UNF MALE	2
3	GA3500802	HYDRAULIC ADAPTOR, ELBOW, 90 DEGREE, 3/4" JIC MALE X 9/16" UN MALE O-RING	1
4	GA3500716	HYDRAULIC ADAPTOR, ELBOW, 90 DEGREE, 9/16" JIC MALE X 9/16" UN MALE O-RING	3

Cylinder, Boom Tilt, 1.5” Shaft, 36-48m (Up to S/N 204053)

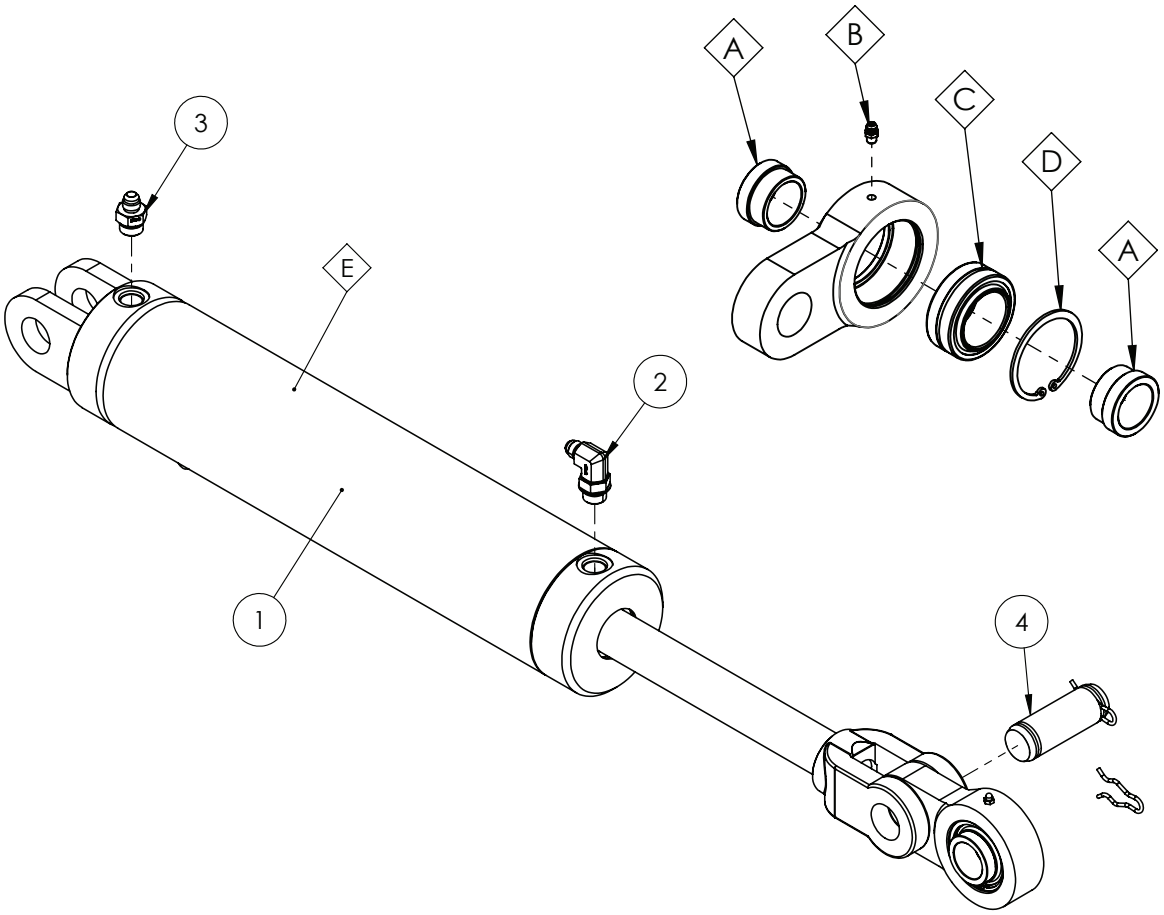

ITEM NO.	PART NUMBER	DESCRIPTION	QTY.
A	GA4551645	BUSH, SPACER, BALL END, ROD, TILT CYLINDER	2
B	GA5012203	GREASE NIPPLE, SHORT, 1/4 UNF, MACH0207	1
C	GA1700029	BEARING, BALL END, 40mm, GE40ES-2RS	1
D	GA5078782	CIRCLIP 62 INTERNAL	1
E	GA3501148	SEAL KIT, HYDRAULIC TILT CYLINDER, GA3500835	-
1	GA3500835	HYDRAULIC CYLINDER, BORE 4”, ROD 1.5”, STROKE 300mm	1
2	GA3500700	HYDRAULIC ADAPTOR, ELBOW, 90 DEGREE, 9/16” JIC MALE X 3/4” UN MALE O-RING, S91-0912	1
3	GA3500147	HYDRAULIC ADAPTOR, NIPPLE, 9/16” JIC MALE X 3/4” UN MALE O-RING, S90-0912	1
4	GA4551875	PIN, 1 1/4” X 68mm LONG, TILT CYLINDER KNUCKLE	1

Cylinder - Boom Tilt, 2” Shaft, 48m (From to S/N 204075)

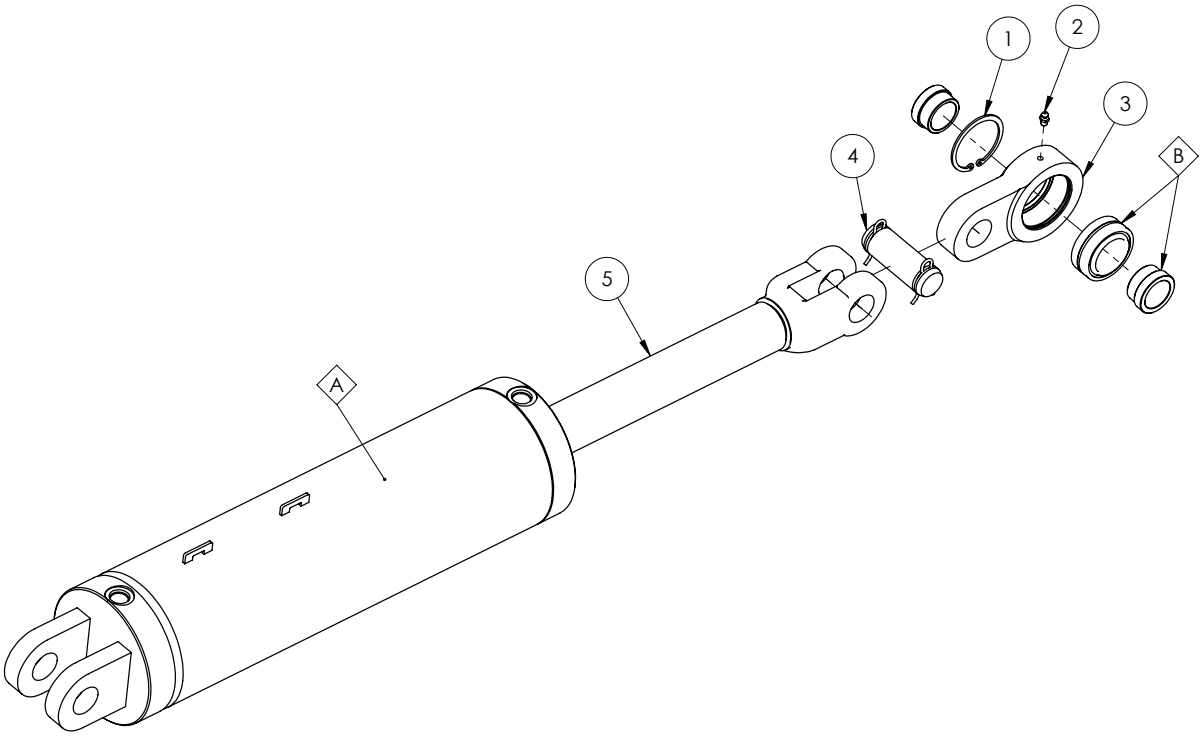

ITEM NO.	PART NUMBER	DESCRIPTION	QTY.
A	GA5026270	SEAL KIT, SUIT, HYDRAULIC CYLINDER, GA3501852, “EUREKA ENG” BRAND ONLY	-
B	GA5026281	KIT, BUSH & BEARING, WITH CIRCLIP, SUIT, ‘EUREKA BRAND’ GA3501852	-
1	GA5078782	CIRCLIP 62 INTERNAL	1
2	GA5012203	GREASE NIPPLE, SHORT, 1/4 UNF, MACH0207	1
3	GA5026257	HOUSING, TOGGLE, “EUREKA ENG”, SUITS, GA3501852	1
4	GA5026282	PIN, 1.25”, WITH CLIPS, SUIT, HYDRAULIC CYLINDER, GA3501852	1
5	GA5026255	SHAFT, 2” X 300mm, “EUREKA ENG”, SUIT, GA3501852	1

Cylinder - Centre Leveling

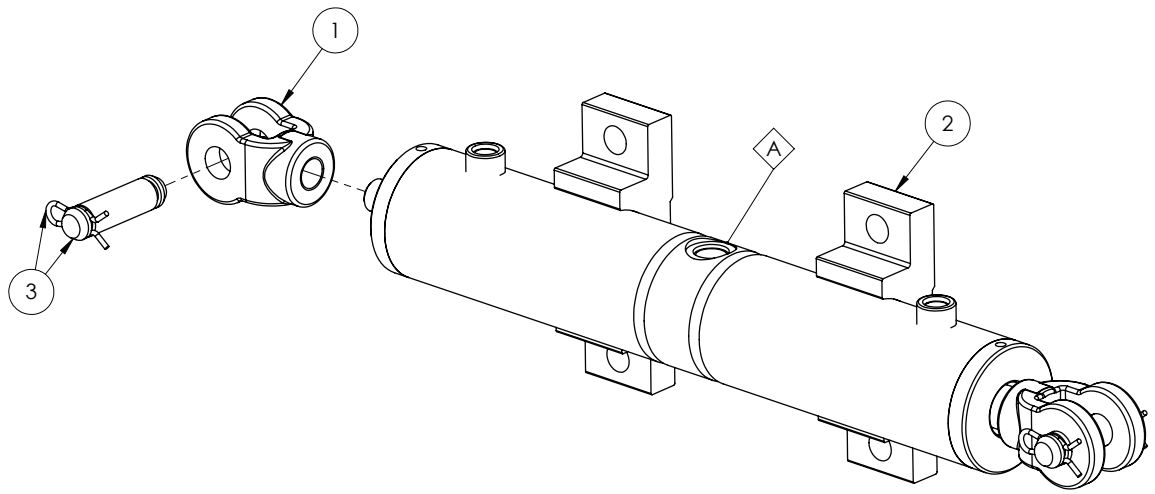

ITEM NO.	PART NUMBER	DESCRIPTION	QTY.
-	GA3500477	HYDRAULIC CYLINDER, BORE 2.5”, ROD 1”, STROKE 110MM, BACK TO BACK	-
-	GA3501580	SEAL KIT, HYDRAULIC CYLINDER, GA3500477, “BICELLI GECO” BRAND ONLY, 6325.SK	-
1	GA5026493	CLEVIS, 72X36X46, SUIT, HYDRAULIC CYLINDER,“BICELLI GECO”, GA3500477	2
2	GA3501581	FOOT PAD, HYDRAULIC CYLINDER, CENTRE LEVEL, GA3500477, “BICELLI GECO” BRAND ONLY	2
3	GA3501582	PIN, 3/4” X 14mm, HYDRAULIC CYLINDER, GA3500477, “BICELLI GECO”, BRAND ONLY	2

Cylinder - Bi-Fold 36-42m

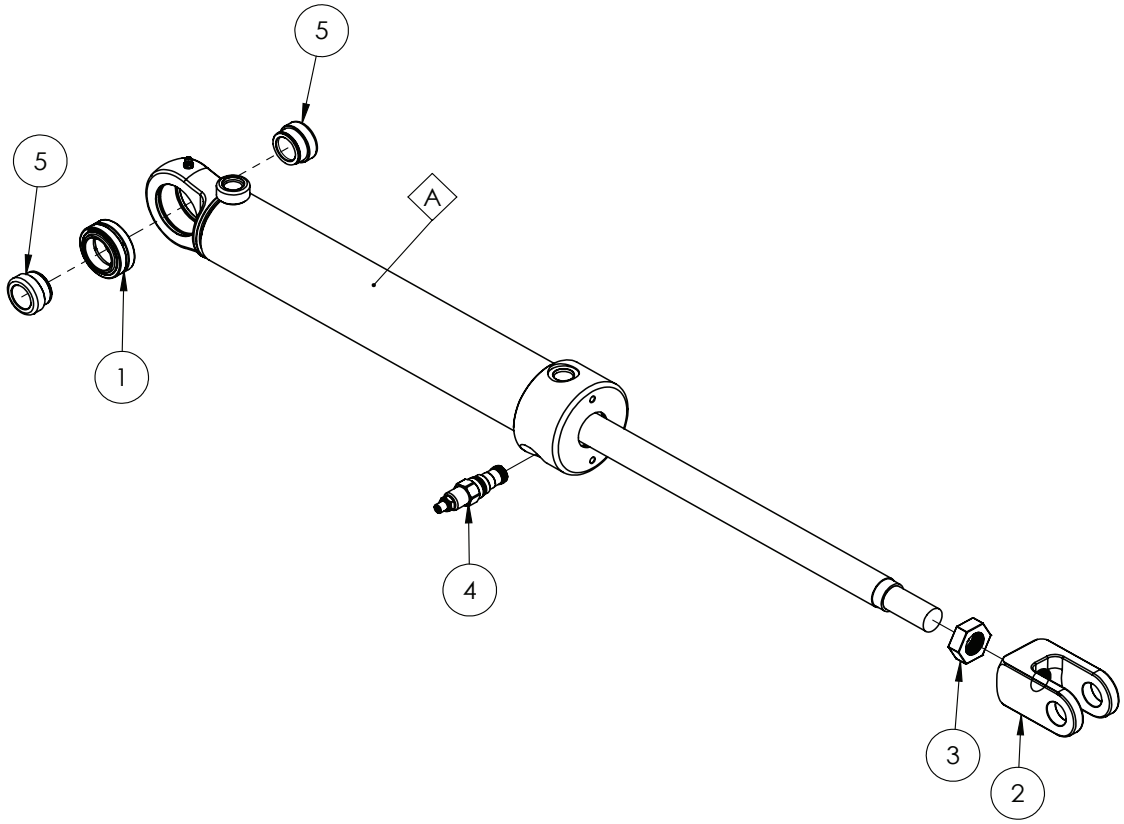

ITEM NO.	PART NUMBER	DESCRIPTION	QTY.
A	GA3501077	SEAL KIT, HYDRAULIC CYLINDER, BI-FOLD CUSHION, GA3500681	1
1	GA3501081	BEARING, SPHERICAL, HYDRAULIC CYLINDER, GA3500681	1
2	GA3501078	CLEVIS, SCREW ON 1 1/2" UNF, HYDRAULIC CYLINDER, GA3500681	1
3	GA3501079	LOCK NUT, 1 1/2" UNF, HYDRAULIC CYLINDER, GA3500681	1
4	GA3501080	NEEDLE VALVE, HYDRAULIC CYLINDER CUSHION CONTROL, GA3500681	1
5	GA5025991	BUSH, 40X35X25, SUIT, HYDRAULIC CYLINDER, "MOTUS", GA3500681	2

Quantities shown are per side.

Cylinder - First Fold 36m (Up to S/N 203792)

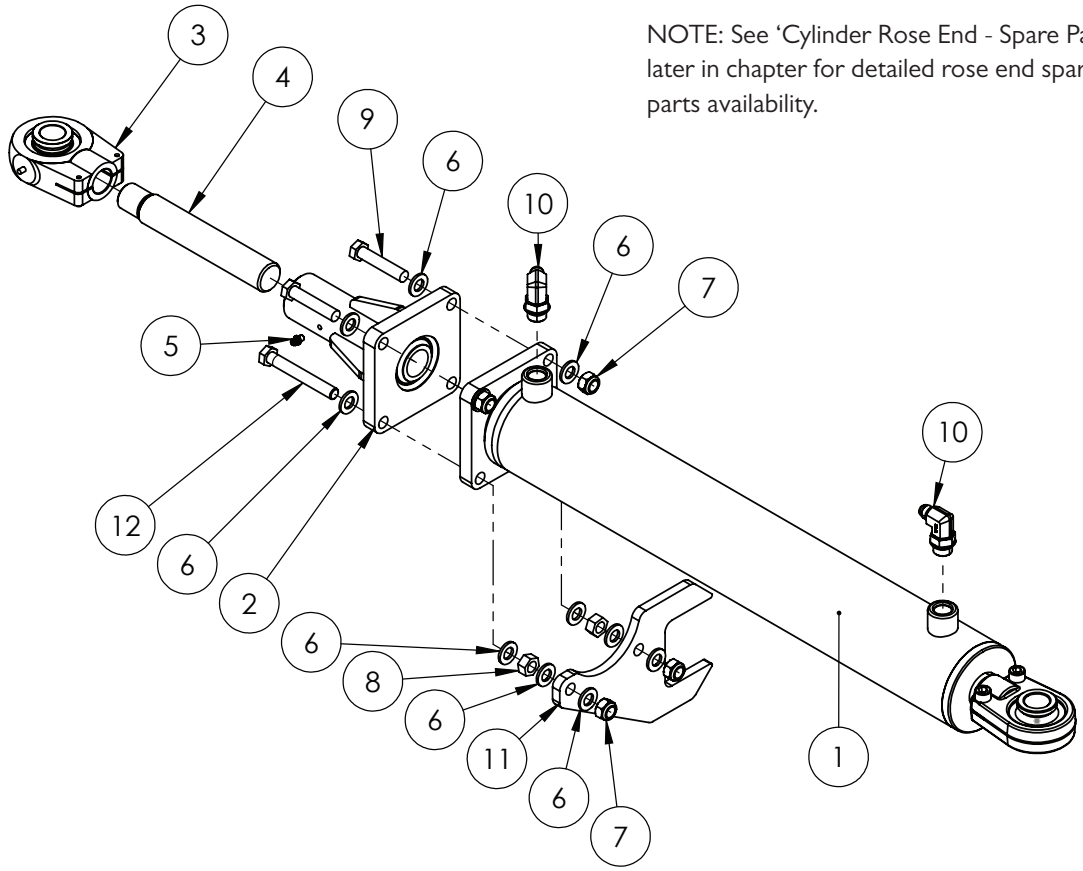

NOTE: See 'Cylinder Rose End - Spare Parts' later in chapter for detailed rose end spare parts availability.

Sub-Assembly On Following Pages

ITEM NO.	PART NUMBER	DESCRIPTION	QTY.
-	GA3500672	SEAL KIT, HYDRAULIC CYLINDER, SUIT GA3500655, EUREKA ENGINEERED PRODUCTS	-
1	GA3500655	HYDRAULIC CYLINDER, DOUBLE ACTING, 3.25" BORE, 1.5" ROD, FLANGE BASE MOUNT, 1" ROSE END	1
2	GA4601820	MOUNT, FOLD CYLINDER BASE, 24-36M TRITECH	1
3	GA5052965	BEARING, ROSE END HOUSING, M28 SCREW ON, SUIT HYDRAULIC CYLINDER & DELTA LINK, INC. BUSHES	1
4	GA4550645	THREADED BOOM PIVOT ADJUSTER, 1 1/4" UNF AND M28 THREADS	1
5	GA5050450	GREASE NIPPLE 6 MM	1
6	GA5000577	WASHER 12MM FLAT SS HD	12
7	GA5012461	NUT M12 NYLOC ZP	4
8	GA5000559	NUT M12 HEX ZP	2
9	GA5000335	BOLT M12 X 60 GR8.8 ZP	2
10	GA3500700	HYDRAULIC ADAPTOR ELBOW, 3/4" UNO TO 9/16" JIC, 90 DEG	2
11	GA5073235	ANTI ROTATION BRACKET, HYDRAULIC FOLD CYLINDER, 48M BOOM	1
12	GA0500081	SET SCREW, M12 X 90MM, GR8.8, ZP	2

Cylinder - First Fold 36m - 42m (From S/N 203792)

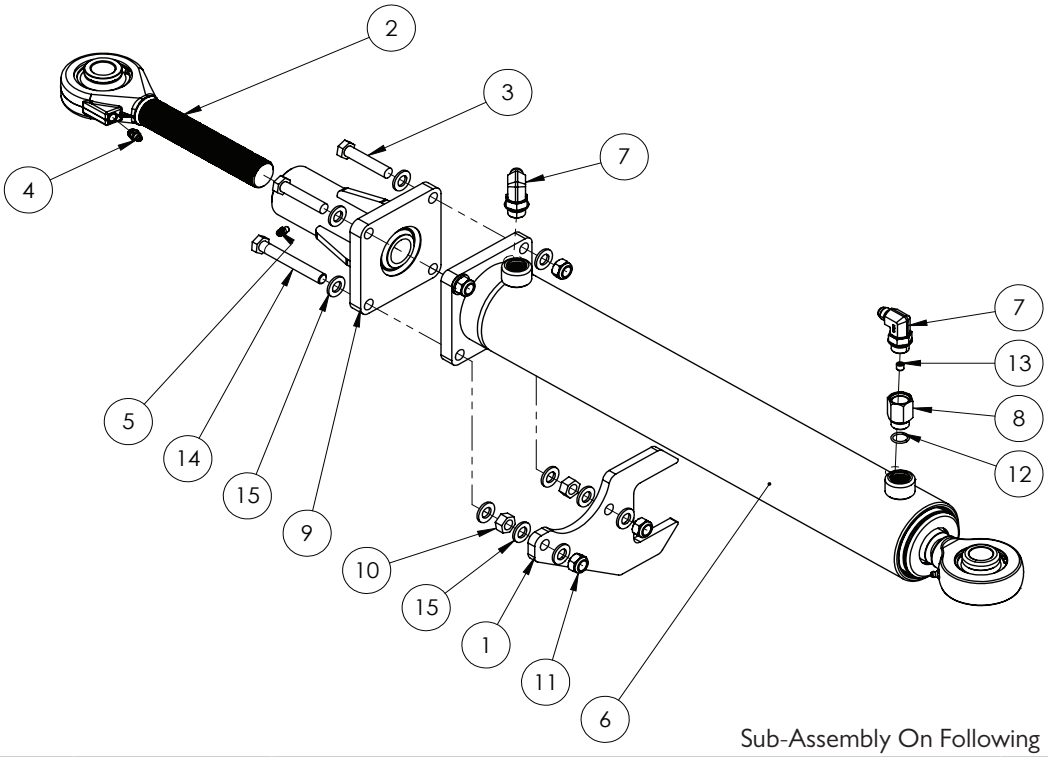

Sub-Assembly On Following Pages

ITEM NO.	PART NUMBER	DESCRIPTION	QTY.
-	GA3500672	SEAL KIT, HYDRAULIC CYLINDER, SUIT GA3500655, EUREKA ENGINEERED PRODUCTS	-
	GA5025907	SEAL KIT, SUIT, HYDRAULIC CYLINDER, “MOTUS” BRAND ONLY, GA3500655-REV04-06	-
1	GA5073235	ANTI ROTATION BRACKET, HYDRAULIC FOLD CYLINDER, 48M BOOM	1
2	GA5078654	BEARING END, ASSEMBLY, FORGED, 1/4-12 UNF THREAD, C/W GEH 35 ES-2RS BEARING, BUSHED DIA. 25.5	1
3	GA5000335	BOLT M12 X 60 GR8.8 ZP	2
4	GA5069980	GREASE NIPPLE, 1/8 BSPP, STRAIGHT	1
5	GA5050450	GREASE NIPPLE, 6MM	2
6	GA3500655	HYDRAULIC CYLINDER, DOUBLE ACTING, 3.25” BORE, 1.5” ROD, FLANGE BASE MOUNT, 1” ROSE END	1
7	GA3500700	HYDRAULIC ADAPTOR, ELBOW, 90 DEGREE, 9/16” JIC MALE X 3/4” UN MALE O-RING, S91-0912	2
8	GA4551930	MACHINED HYDRAULIC FITTING, 3/4” UN O-RING MALE X 3/4” UN O-RING FEMALE, SUIT INTERNAL ORIFICE PLUG	1
9	GA4601820	MOUNT, FOLD CYLINDER BASE, 24-36M TRITECH, MY19	1
10	GA5000559	NUT M12 HEX ZP	2
11	GA5012461	NUT M12 NYLOC ZP	4
12	GA5078123	O-RING UNO 3/4”, ROD-UN12	1
13	GA3500851	PLUG, ORIFICE, 1/16” NPT X 1.0MM	1
14	GA0500081	SET SCREW, M12 X 90MM, GR8.8, ZP	2
15	GA5000577	WASHER 12MM FLAT SS HD	12

Cylinder - First Fold 48m

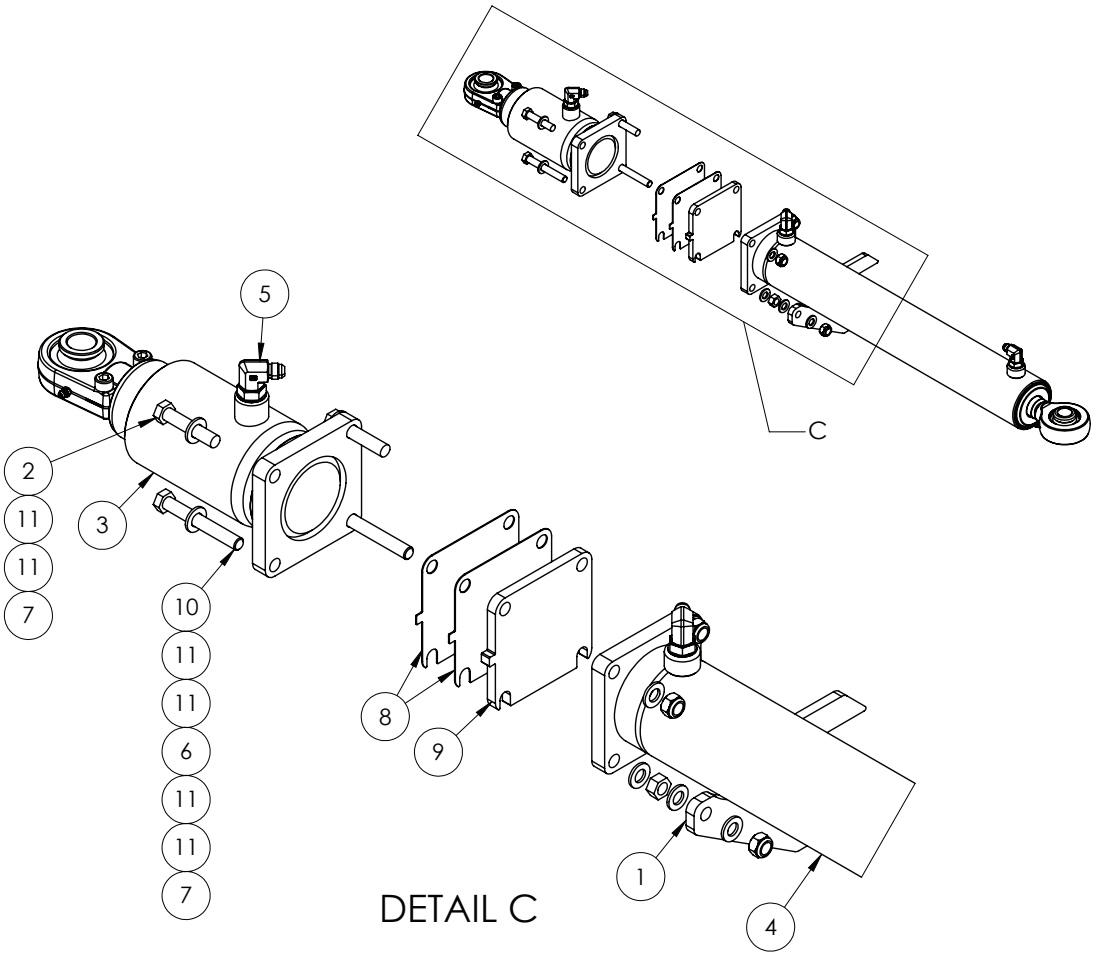

See Sub-Assembly On Following Pages For Replacement Parts

ITEM NO.	PART NUMBER	DESCRIPTION	QTY.
1	GA5073235	ANTI ROTATION BRACKET, HYDRAULIC FOLD CYLINDER, 48m BOOM	1
2	GA5000335	BOLT M12 X 60 GR8.8 ZP	2
3	GA3500656	HYDRAULIC CYLINDER, DISPLACMENT (CUSHION), 3.25" BORE, 3" ROD, FLANGE BASE MOUNT, 1" ROSE END	1
4	GA3500655	HYDRAULIC CYLINDER, DOUBLE ACTING, 3.25" BORE, 1.25" ROD, FLANGE BASE MOUNT, 1" ROSE END	1
5	GA3500700	HYDRAULIC ADAPTOR, ELBOW, 90 DEGREE, 9/16" JIC MALE X 3/4" UN MALE O-RING, S91-0912	3
6	GA5000559	NUT M12 HEX ZP	2
7	GA5012461	NUT M12 NYLOC ZP	4
8	GA4500975	PLATE, SHIM, FOLD CYLINDER, 48M BOOM	2
9	GA4500976	PLATE, SHIM, 10mm, FOLD CYLINDER, 48M BOOM	1
10	GA0500081	SET SCREW M12 X 90 GR8.8, ZP	2
11	GA5000577	WASHER 12mm FLAT SS HD	12

Cylinder - First Fold 48m

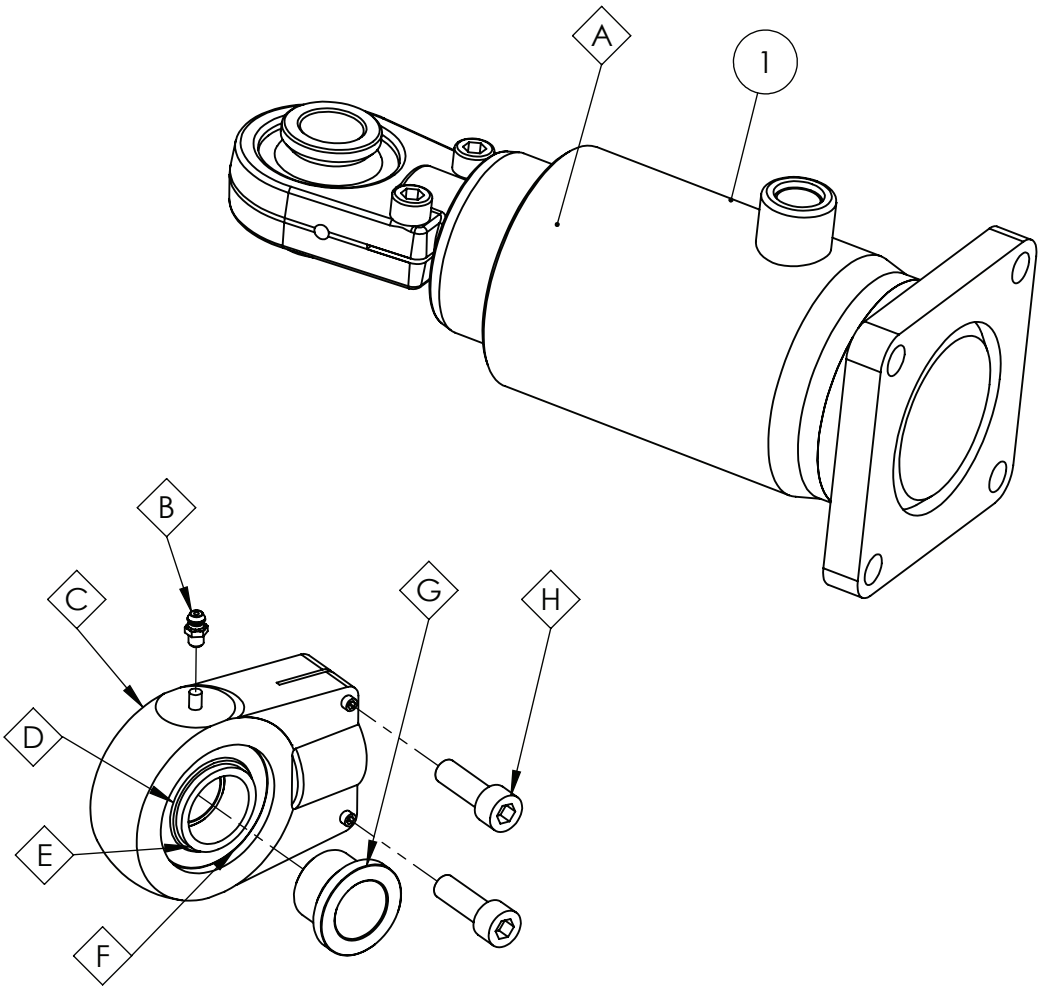

Quantities shown are per side.

HITEM NO.	PART NUMBER	DESCRIPTION	QTY.
A	GA3500673	SEAL KIT, HYDRAULIC CYLINDER, SUIT GA3500656, EUREKA ENGINEERED PRODUCTS	-
B	GA5050450	GREASE NIPPLE, 6MM	1
C	GA5052965	BEARING, ROSE END HOUSING, M28 SCREW ON, SUIT HYDRAULIC CYLINDER & DELTA LINK, INC. BUSHES	-
D	GA5052966	SALES KIT, BEARING KIT, SUIT SCREW ON ROSE END, CYLINDERS AND DELTA LINKS	-
E	GA5067605	BEARING, RADIAL SPHERICAL PLAIN, 30MM ID X 55MM OD X 32MM THICK, GEG 30 ES 2RS	-
F	GA5067610	CIRCLIP, SUIT BEARING SCREW ON ROSE END, RTW 55	-
G	GA5021925	SMALL BEARING BUSH, SUIT SCREW ON ROSE END, HYPOWER, R-10424	-
H	GA5006131	SHCS M10 X 30 SS A2-70	-
1	GA3500656	HYDRAULIC CYLINDER, DISPLACEMENT (CUSHION), 3.25” BORE, 3” ROD, FLANGE BASE MOUNT, 1” ROSE END	1

Cylinder - First Fold 48m (Old)

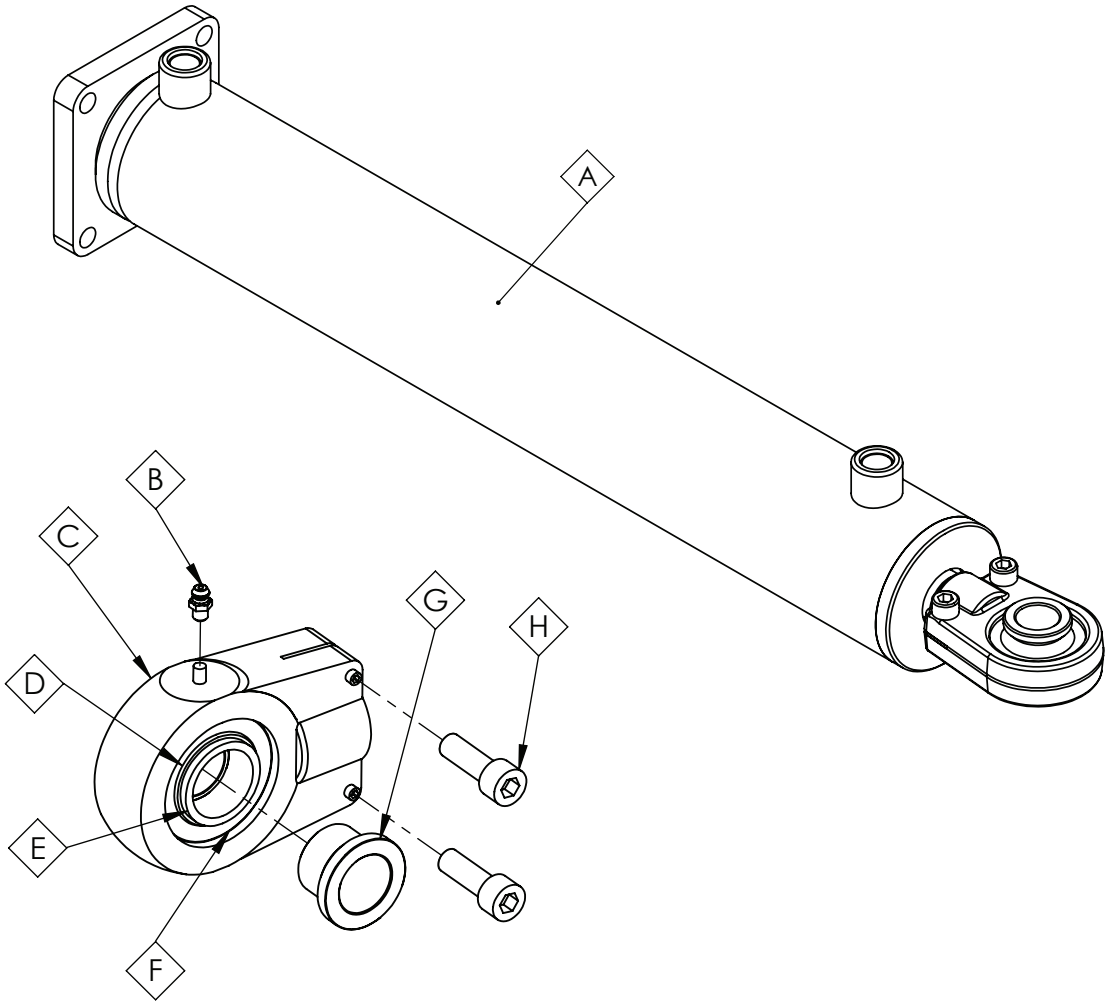

HITEM NO.	PART NUMBER	DESCRIPTION	QTY.
-	GA3500655	HYDRAULIC CYLINDER, DOUBLE ACTING, 3.25” BORE, 1.5” ROD, FLANGE BASE MOUNT, 1” ROSE END	-
A	GA3500672	SEAL KIT, HYDRAULIC CYLINDER, SUIT GA3500655, EUREKA ENGINEERED PRODUCTS	-
B	GA5050450	GREASE NIPPLE, 6MM	1
C	GA5052965	BEARING, ROSE END HOUSING, M28 SCREW ON, SUIT HYDRAULIC CYLINDER & DELTA LINK, INC. BUSHES	-
D	GA5052966	SALES KIT, BEARING KIT, SUIT SCREW ON ROSE END, CYLINDERS AND DELTA LINKS	-
E	GA5067605	BEARING, RADIAL SPHERICAL PLAIN, 30MM ID X 55MM OD X 32MM THICK, GEG 30 ES 2RS	-
F	GA5067610	CIRCLIP, SUIT BEARING SCREW ON ROSE END, RTW 55	-
G	GA5021925	SMALL BEARING BUSH, SUIT SCREW ON ROSE END, HYPOWER, R-10424	-
H	GA5006131	SHCS M10 X 30 SS A2-70	-

Cylinder - First Fold 48m (REV-05)

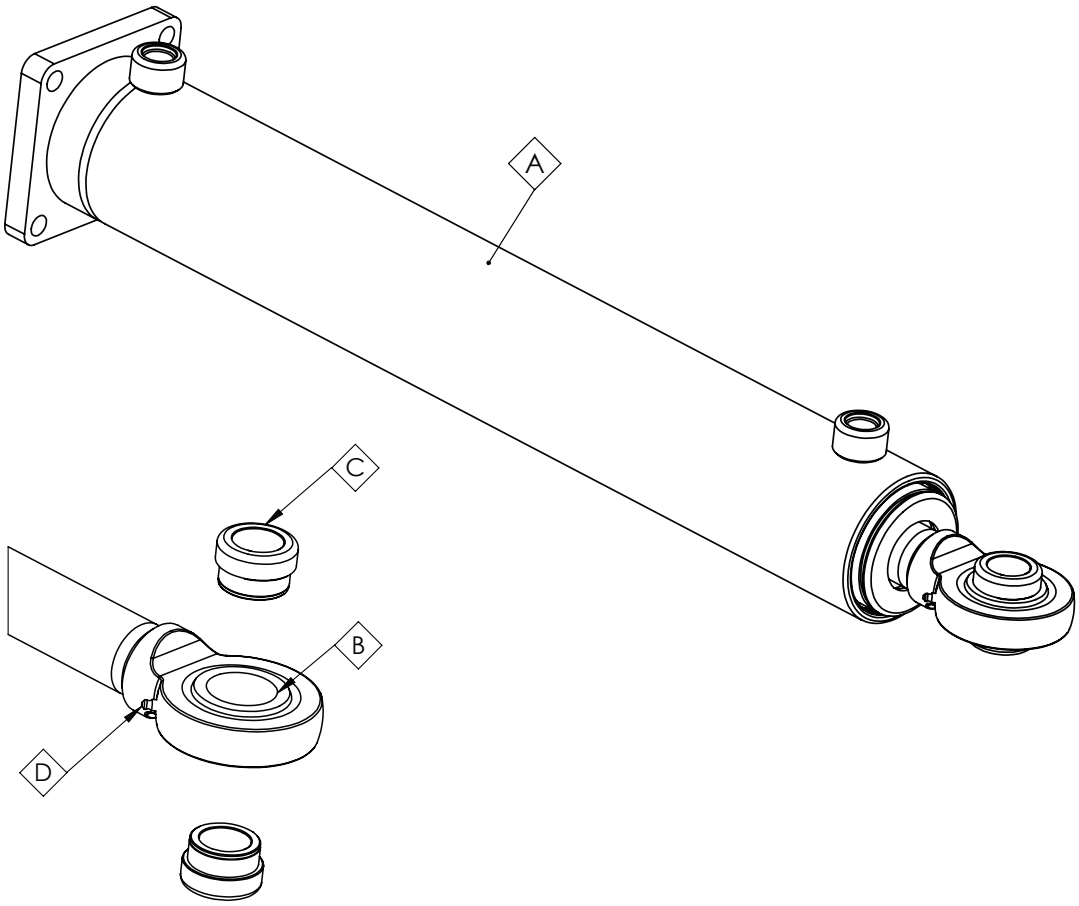

ITEM B IS A PRESSED BEARING

ITEM NO.	PART NUMBER	DESCRIPTION	QTY.
-	GA3500655	HYDRAULIC CYLINDER, DOUBLE ACTING, 3.25” BORE, 1.5” ROD, FLANGE BASE MOUNT, 1” ROSE END	-
A	GA5025907	SEAL KIT, SUIT, HYDRAULIC CYLINDER, “MOTUS” BRAND ONLY, GA3500655	-
B	GA5025896	BEARING SPHERICAL, GE25ES-2RS, SUIT, ROSE END, SK35ES-60006461	1
C	GA5025991	BUSH, 40X35X25, SUIT, HYDRAULIC CYLINDER, “MOTUS”, GA3500681	2
D	GA5050450	GREASE NIPPLE, 6mm	1

Cylinder - First Fold 48m (REV-06)

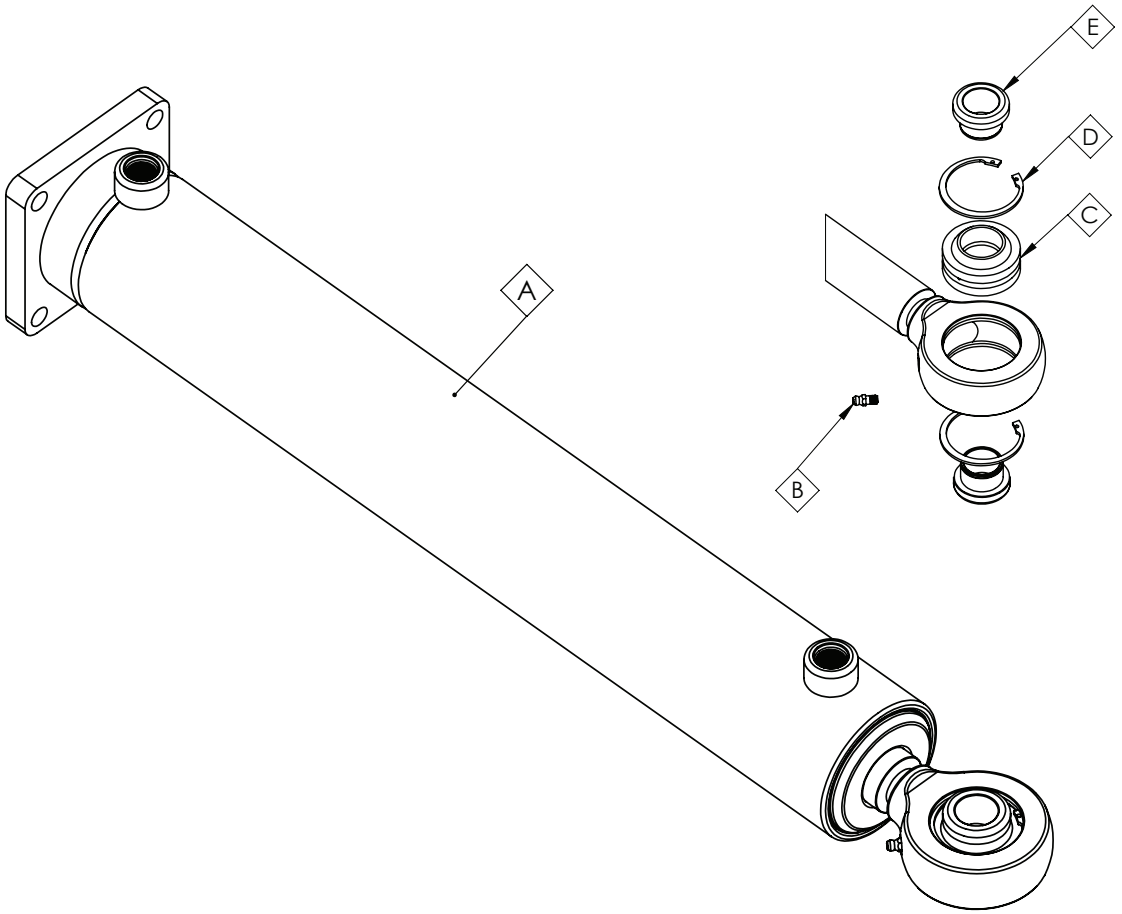

ITEM NO.	PART NUMBER	DESCRIPTION	QTY.
-	GA3500655	HYDRAULIC CYLINDER, DOUBLE ACTING, 3.25” BORE, 1.5” ROD, FLANGE BASE MOUNT, 1” ROSE END	-
A	GA5025907	SEAL KIT, SUIT, HYDRAULIC CYLINDER, “MOTUS” BRAND ONLY, GA3500655	-
B	GA5050450	GREASE NIPPLE, 6mm	1
C	GA5067605	BEARING, RADIAL SPHERICAL PLAIN, 30mm ID X 55mm OD X 32mm THICK, GEG 30 ES 2RS	1
D	GA5067610	CIRCLIP, SUIT BEARING SCREW ON ROSE END, RTW 55	2
E	GA5026034	BUSH, ROSE END, 30OD X 25ID	2

Cylinder - Second Stage Fold 48m

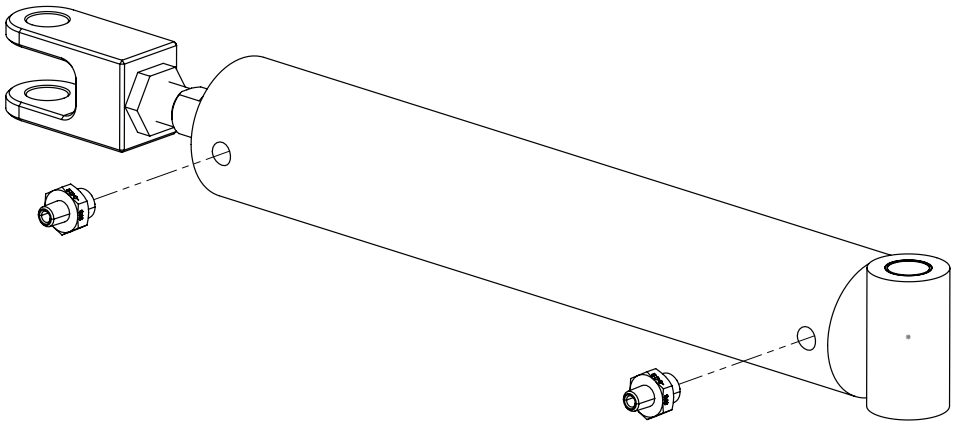

Quantities shown are per side.

ITEM NO.	PART NUMBER	DESCRIPTION	QTY.
-	GA5052733	SEAL KIT, SUIT 2 1/2" BORE X 1 1/4" ROD, SUIT GA5070845, GA3500060, HYPOWER BRAND ONLY	-
-	GA3501759	SEAL KIT, SK250125, 21/2" X 11/4", SUIT, GA3500060, "MOTUS" BRAND ONLY	-
1	GA3500060	HYDRAULIC CYLINDER, BORE 2.5", ROD 1.25", STROKE 400 MM	1
2	GA3500359	HYDRAULIC ADAPTOR, NIPPLE, 1/4" BSPT MALE X 3/4" UN MALE O-RING	2

Cylinder - Third Stage Fold 48m (Up To S/N 203777)

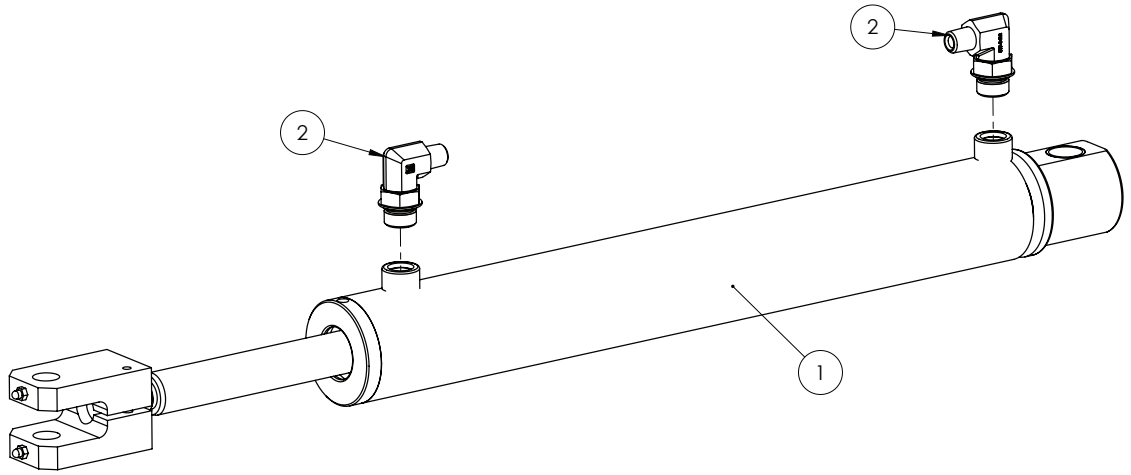

Quantities shown are per side.

ITEM NO.	PART NUMBER	DESCRIPTION	QTY.
-	GA3500684	SEAL KIT, HYDRAULIC CYLINDER, SUIT GA3500476, EUREKA ENGINEERED BRAND ONLY	-
1	GA3500476	HYDRAULIC CYLINDER, BORE 2", ROD 1", STROKE 395MM, EUREKA ENGINEERING BRAND	1
-	GA3501082	HYDRAULIC CYLINDER, 2.5" X 1.25" X 395MM STROKE, 3RD STAGE FOLD, 48M, FROM	-
2	GA3500348	HYDRAULIC ADAPTOR, ELBOW, 90 DEGREE, 1/4" BSPT MALE X 3/4" UN MALE O-RING	2

Cylinder - Third Stage Fold 48m (From S/N 203787)

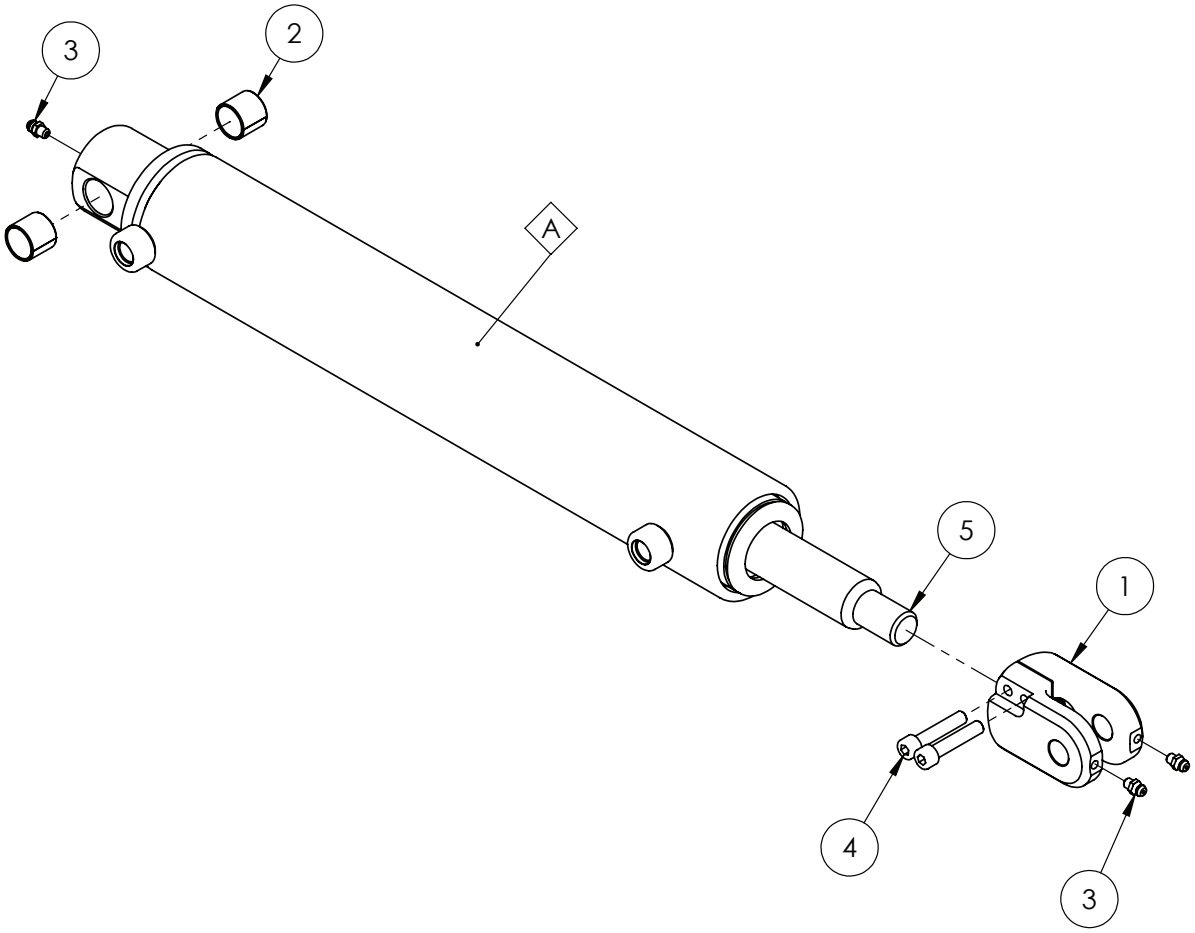

ITEM NO.	PART NUMBER	DESCRIPTION	QTY.
-	GA3501082	HYDRAULIC CYLINDER, 2.5” X 1.25” X 395MM STROKE, 3RD STAGE FOLD, 48M	1
A	GA3501584	SEAL KIT, SUIT, HYDRAULIC CYLINDER, GA3501082, “MOTUS” BRAND	-
1	GA3501886	CLEVIS, SUIT, HYDRAULIC CYLINDER, “MOTUS”, GA3501082	1
2	GA3501888	GLACIER BUSH 20 X 23 X 20W	2
3	GA5050450	GREASE NIPPLE, 6MM	3
4	GA5011487	SHCS M8 X 40 GR 12.9 ZP	2
5	GA3501885	SHAFT, 1.25”, SUIT, HYDRAULIC CYLINDER, “MOTUS” BRAND ONLY, GA3501082	1

Cylinder - Boom Catch

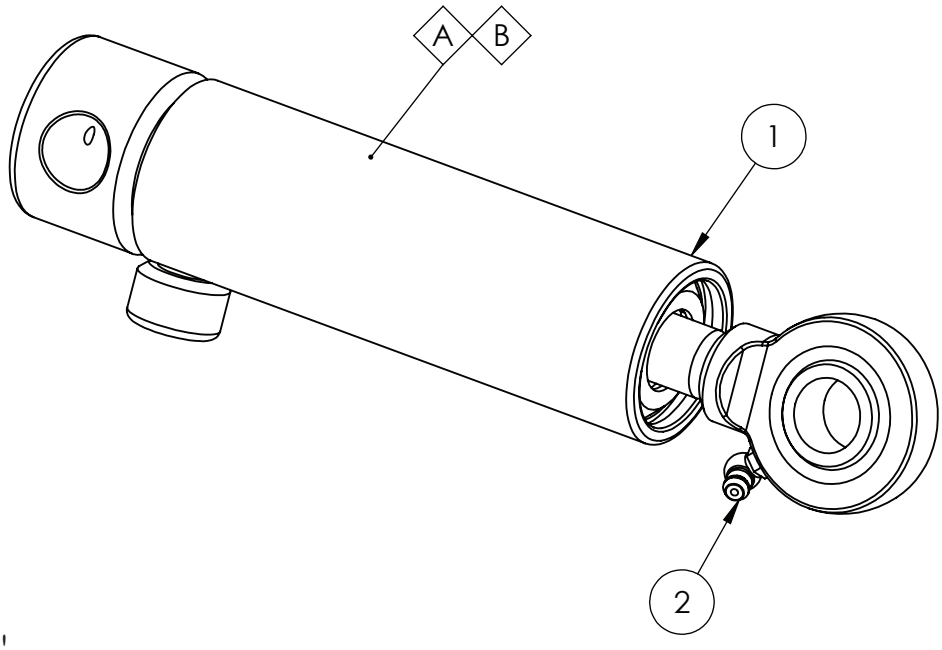

WARNING!
HEAD UNDER SPRING FORCE
TAKE CARE ON ASSEMBLY AND DISASSEMBLY

ITEM NO.	PART NUMBER	DESCRIPTION	QTY.
A	GA3500671	SEAL KIT, HYDRAULIC CYLINDER, SUIT GA3500480, EUREKA ENGINEERED PRODUCTS	-
B	GA3501802	SEAL KIT, SUIT, HYDRAULIC CYLINER, “MOTUS” BRAND ONLY, GA3500480	-
1	GA3500480	HYDRAULIC CYLINDER, BORE 1.5”, ROD 0.75”, STROKE 28MM, DISPLACEMENT, SPRING RETURN	1
2	GA5051970	GREASE NIPPLE 6MM 90 DEG	1

Cylinder Rose End - Spare Parts

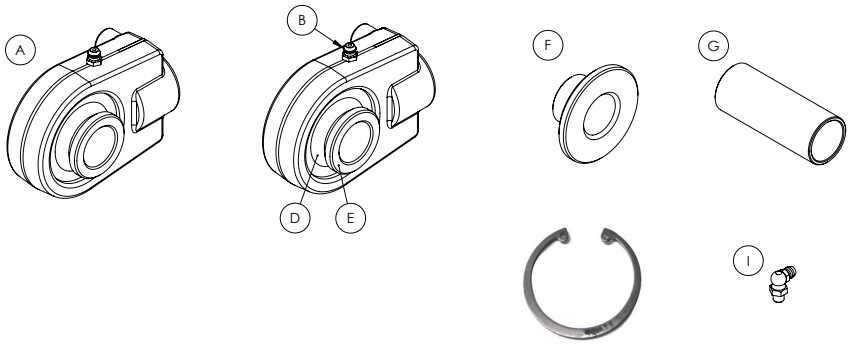

NOTE: Item H contains items C,D & E plus snap rings shown on the lower right.

ITEM NO.	PART NUMBER	DESCRIPTION	QTY.
A	GA5052965	COMPLETE ROSE END, M28 SCREW ON, SUIT HYDRAULIC CYLINDER & DELTA LINK, INCLUDING BUSHES (ITEM E)	1
B	GA5012203	GREASE NIPPLE, SHORT, 1/4” UNF	1
C	GA5067610	CIRCLIP, SUIT BEARING SCREW ON ROSE END, RTW 55	2
D	GA5067605	BEARING, SUIT SCREW ON ROSE END, GEG 30 ES 2RS	1
E	GA5021925	SMALL BEARING BUSH, SUIT SCREW ON ROSE END, HYPOWER, R-10424	2
F	GA5021930	LARGE BEARING BUSH, SUIT SCREW ON ROSE END, HYPOWER, R-10429	2
G	GA4572535	BUSH, ROSE END PIVOT WIDE SUIT TILT RAM	1
H	GA5052966	BEARING KIT, SUIT SCREW ON ROSE END, CYLINDERS AND DELTA LINKS	1
I	GA5009637	GREASE NIPPLE, ELBOW, 90 DEGREE, 1/4" UNF MALE	1

NOTE: Quantities shown represent the number of parts needed per rose end and depend on your configuration e.g. the rose end will have either 2x Item E or 2x Item F but not both.

Chapter 19

PLUMBING

Self Cleaning Valve

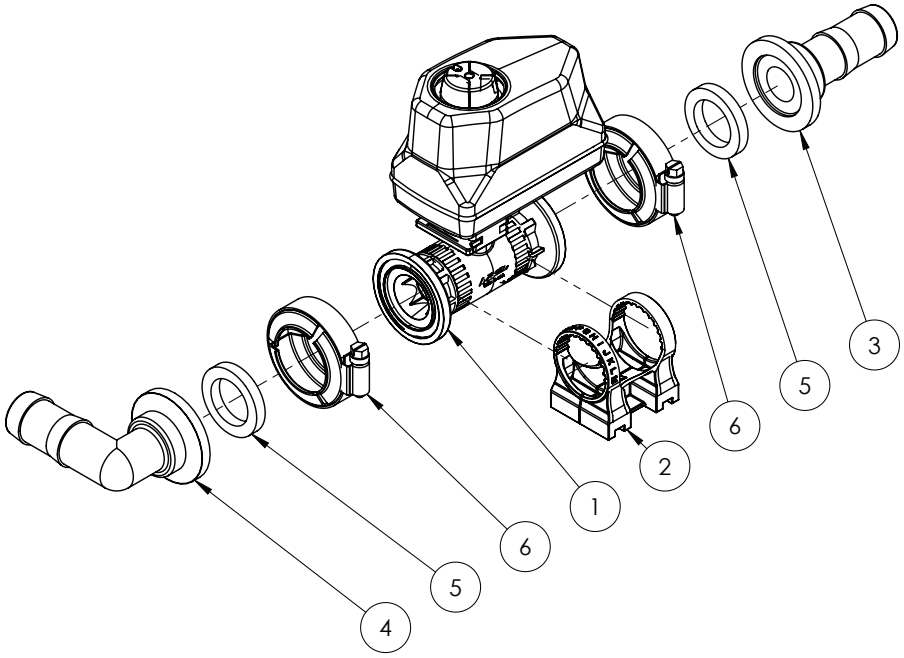

ITEM NO.	PART NUMBER	DESCRIPTION	QTY.
1	GA2000141	BALL VALVE, MOTORIZED, 2 WAY, 1” FLANGE CONNECTION, 0.5 SECOND, KZ VALVE, TX2	1
	GA2000158	ACTUATOR SUIT BALL VALVE, 1” FLANGE CONNECTION, TX2, KZ VALVE	
	GA2000154	BALL VALVE, VALVE ONLY, SUIT GA2000141, KZ VALVE	
2	GA2000145	MOUNTING BRACKET TX2 ELECTRIC BALL VALVE KIT, KZ VALVE	1
3	GA5077811	HOSE BARB, STRAIGHT, 1" FLANGE X 1" HOSE	1
4	GA5077812	HOSE BARB, ELBOW, 90 DEGREE, 1" FLANGE X 1" HOSE	1
5	GA5077818	SEAL, SUIT 1" MANIFOLD FITTING, RUBBER EPDM	2
6	GA5077664	CLAMP, WORM SCREW, USE WITH 1" STANDARD FLANGE PORT	2

Plumbing Control Valve Assembly

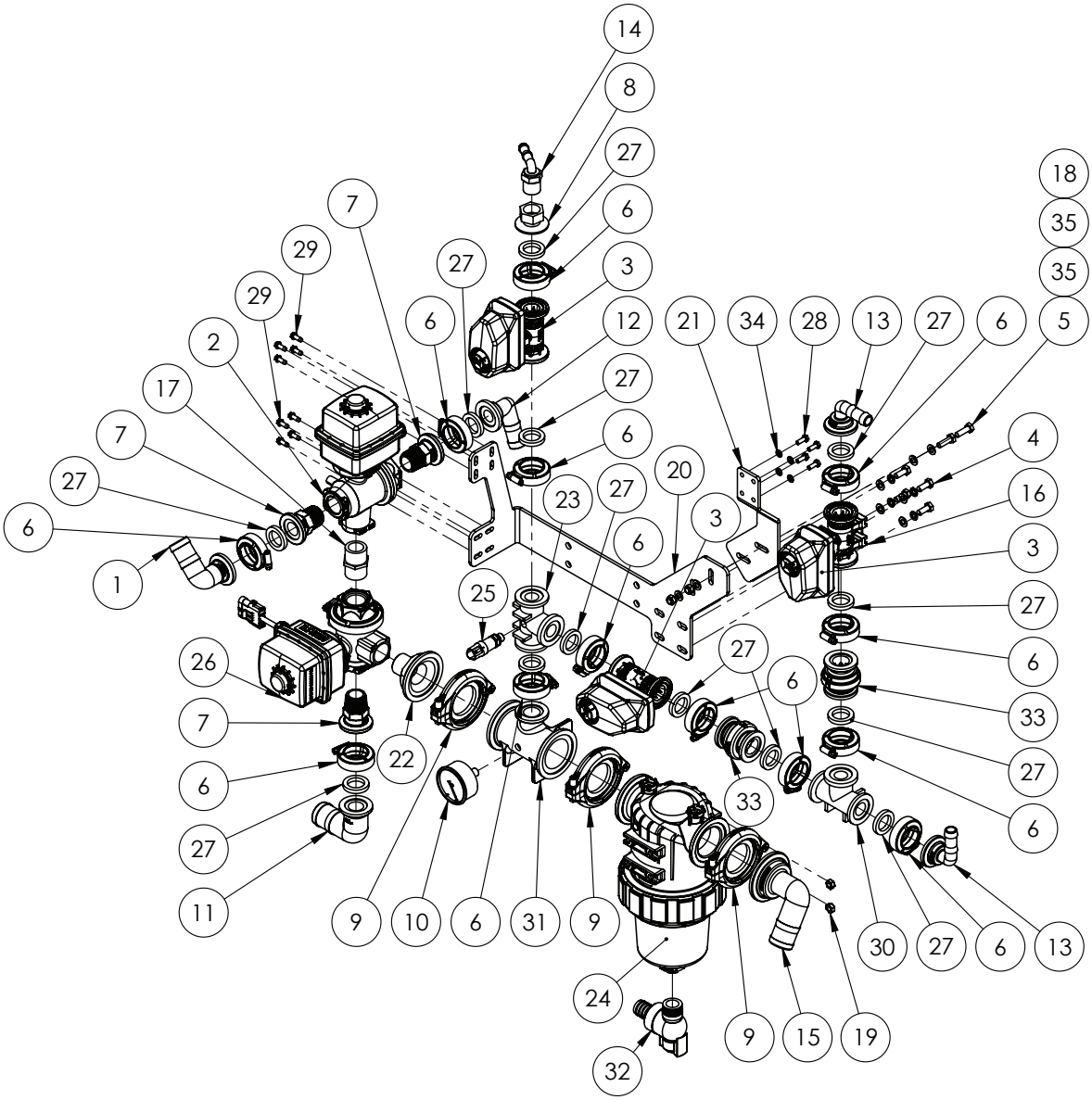

ITEM NO.	PART NUMBER	DESCRIPTION	QTY.
1	GA5077807	1" FLANGE X 1 1/4" BARB, ELBOW, 90 DEGREE, M100125BRB90	1
2	GA2000142	BALL VALVE, MOTORISED, 3 WAY, 1" THREADED PORTS, BOTTOM LOAD ON/OFF/ON, 0.8 SECONDS, KZ VALVE	1
	GA2000159	BALL VALVE, ACTUATOR ONLY, SUIT GA2000142, KZ VALVE	
	GA2000155	BALL VALVE, VALVE ONLY, SUIT GA2000142, KZ VALVE	
3	GA2000141	BALL VALVE, MOTORIZED, 2 WAY, 1" FLANGE CONNECTION, 0.5 SECOND, KZ VALVE, TX2	3
	GA2000158	ACTUATOR SUIT BALL VALVE, 1" FLANGE CONNECTION, TX2, KZ VALVE	
	GA2000154	BALL VALVE, VALVE ONLY, SUIT GA2000141, KZ VALVE	
4	GA5004085	BOLT M8 X 20 GR8.8 ZP	4

Continued over page

Plumbing Control Valve Assembly

ITEM NO.	PART NUMBER	DESCRIPTION	QTY.
5	GA5004711	BOLT M8 X 25 GR8.8 ZP	2
6	GA5077664	CLAMP, WORM SCREW, 1", BANJO	13
7	GA5077820	COUPLING, FLANGED, 1 FLANGE X 1 MALE THREAD, BANJO	3
8	GA5077804	COUPLING, 1" FLANGE X 3/4" FEMALE THREAD, BANJO	1
9	GA2000115	FLANGE CLAMP, AND GASKET, 2", SERIES 220, HYPRO	3
10	GA4948475	GAUGE PRESSURE, REAR MOUNT, 230PSI, 1600KPA, 63mm FACE, 1/4" MALE THREAD, 530.9313057.23.	1
11	GA2000138	HOSE BARB, ELBOW, 90 DEGREE, 1" FLANGE, X 1 1/2" HOSE, BANGO M100150BRB90	1
12	GA5077812	HOSE BARB, ELBOW, 90 DEGREE, 1 FLANGE X 1 HOSE, BANJO	1
13	GA5077803	HOSE BARB, ELBOW, 90 DEGREE, 1 FLANGE X 3/4 HOSE, BANJO, M100075BRB90	2
14	GA5077710	HOSE BARB, ELBOW, 90 DEGREE, 3/4 MALE THREAD X 1/2 HOSE, BANJO	1
15	GA5077856	HOSE BARB, 2" FP FLANGE, 1-1/2" HB, 90 DEGREE	1
16	GA2000145	MOUNTING BRACKET TX2 ELECTRIC BALL VALVE KIT, KZ VALVE	1
17	GA5077914	NIPPLE, SHORT, 1" MALE THREAD X 1" MALE THREAD, BANJO	1
18	GA5004917	NUT M8 NYLOC ZP	2
19	GA5011499	NUT M8 ZP	4
20	GA4405660	PLATE, MOUNT, PLUMBING CONTROL VALVE ASSEMBLY, G6 MY20	1
21	GA4406200	PLATE, SUPPORT, PLUMBING CONTROL VALVE ASSEMBLY, G6 MY20	1
22	GA4551165	PLUMBING COUPLING, M220 FLANGE TO 1" MALE NPT THREAD	1
23	GA2000149	PLUMBING FITTING, TEE, 1" FLANGES AND 1/4" FEMALE THREAD, BANJO	1
24	GA2000563	PRESSURE FILTER, 2", 100 MESH, ARAG SERIES 330	1
25	GA3000316	PRESSURE SENSOR TRANSDUCER, 0-25 BAR, 0.5-4.5V, IFM	1
26	GA2000065	REGULATOR VALVE, 1" NPT, FULL PORT, 3 WAY, 0.8 SEC 12V, KZ VALVE	1
	GA2000066	REGULATOR VALVE, ACTUATOR ONLY, 0.8 SEC 12V,SUIT GA2000065, KZ VALVE	
	GA2000067	REGULATOR VALVE, VALVE ONLY, 1" NPT, FULL PORT, 3-WAY SIDE LOAD, NF3F23, KZ VALVE	
	GA5026754	KIT, REPAIR, VALVE, KZ, SUIT, GA2000067	
	GA5026753	V-CLAMP, 2", SP FLANGE, KZ VALVE	
	GA5026755		
27	GA5077818	SEAL, SUIT 1 MANIFOLD FITTING, RUBBER EPDM, BANJO, M100G	13
28	GA5011395	SET SCREW M6 X 16 SS A2-70	4
29	GA0500022	SET SCREW SELF TAPPING TRILOBE M6 X 16 ZP	8

Continued over page

Plumbing Control Valve Assembly

ITEM NO.	PART NUMBER	DESCRIPTION	QTY.
30	GA5077823	TEE, 1 FLANGE X 1 FLANGE X 1 FLANGE, BANJO, M100TEE	1
31	GA2000569	TEE, 2” FULL PORT X 1”, W/ 1/4” BSP FEMALE THREAD, FLANGE, M220100TEEC1, BANJO	1
32	GA2000564	VALVE, BALL, DRAIN FOR FILTER 330 SERIES	1
33	GA5077889	VALVE, CHECK, 1” MANIFOLD, FLANGE, BANJO, MCV100	2
34	GA5004437	WASHER 6mm FLAT SS	4
35	GA5003643	WASHER 8mm FLAT SS HD	8
36	GA5004919	WASHER 8mm SPRING SS	4

Pressure Filter - Self Cleaning

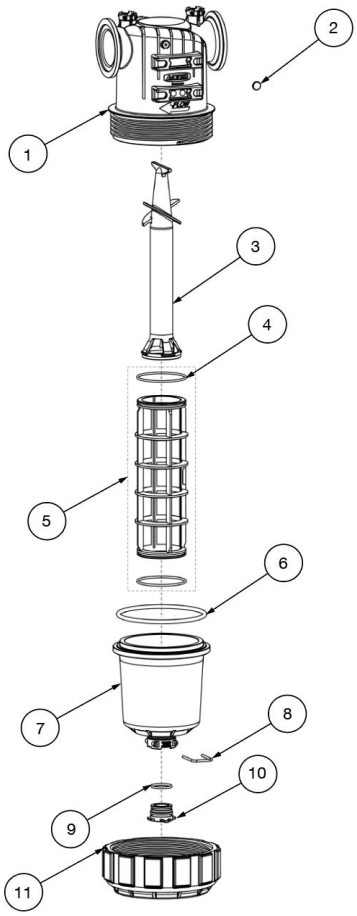

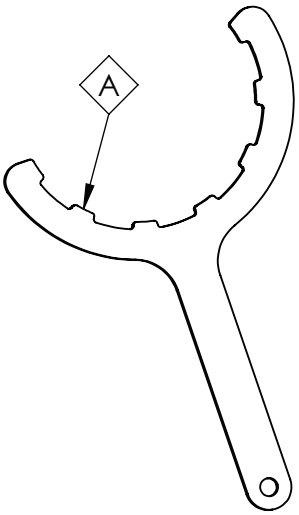

ITEM NO.	PART NUMBER	DESCRIPTION	QTY.
A	GA4525000	SPANNER, ZINC COATED, 2” PRESSURE FILTER, ARAG 3303172V GA2000563	1
1	GA2000246	BODY, SUIT PRESSURE FILTER GA2000563, ARAG, 3303070.010	1
2	GA5078771	YELLOW CAP, ARAG, PRESSURE FILTER, 80MM, 31020035.012	1
3	GA2000247	SELF-CLEANING CYLINDER, SUIT PRESSURE FILTER GA2000563, ARAG, 330000.050	1
4	GA2000248	O-RING, FILTER ELEMENT, SUIT PRESSURE FILTER GA2000563, ARAG, 462200.040V	2
5	GA2000347	FILTER ELEMENT, SUIT GA2000563 PRESSURE FILTER, YELLOW, 80 MESH, VITON O RINGS, ARAG	1
6	GA2000249	O-RING, BOWL, SUIT PRESSURE FILTER GA2000563, ARAG, G11100V	1
7	GA2000250	BOWL, SUIT PRESSURE FILTER GA2000563, ARAG, 3300100.020	1
8	GA2000252	FORK D.3, DIST.29, SUIT PRESSURE FILTER GA2000563, ARAG, 010003	1
9	GA2000251	O-RING, BLANK CAP, SUIT PRESSURE FILTER GA2000563, ARAG, G11058V	1
10	GA2000342	PRESSURE FILTER BOWL CAP, ARAG 330, 219130	1
11	GA2000253	LOCK RING, SUIT PRESSURE FILTER GA2000563, ARAG, 330000.040	1

Suction Filter

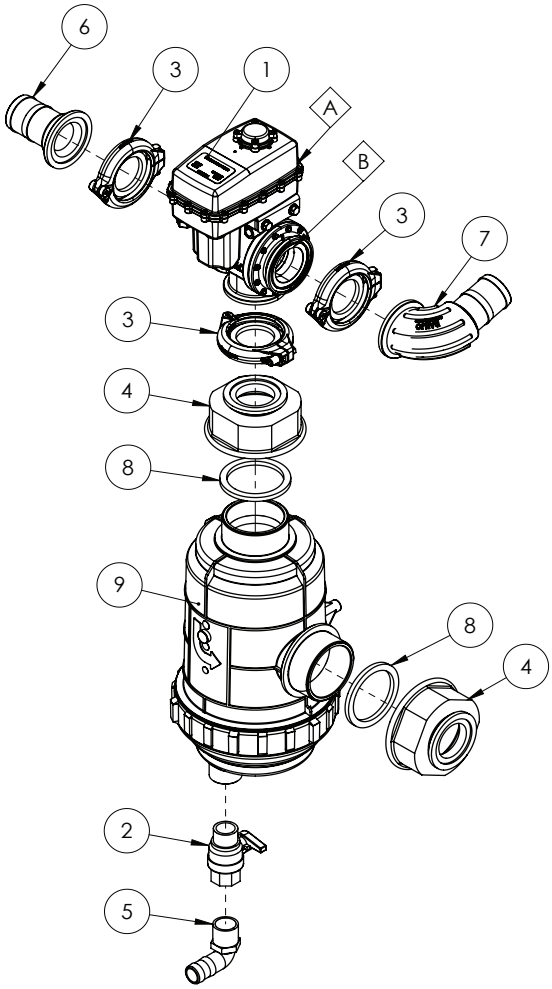

ITEM NO.	PART NUMBER	DESCRIPTION	QTY.
A	GA2000160	BALL VALVE, ACTUATOR ONLY, SUIT GA2000143, KZ VALVE	-
B	GA2000156	BALL VALVE, VALVE ONLY, SUIT GA2000143, KZ VALVE	-
1	GA2000143	BALL VALVE, MOTORISED, 3 WAY, 2” FLANGE CONNECTION, BOTTOM LOAD ON/OFF/ON, 3 SECOND, KZ VALVE	1
2	GA5067620	BALL VALVE, 1” MALE / FEMALE, TEE HANDLE, BRASS	1
3	GA2000115	FLANGE CLAMP, AND GASKET, 2”, SERIES 220, HYPRO BG-UFC0200	3
4	GA4550450	FLANGE, M220 X 3” BSP FEMALE, PLASTIC	2
5	GA5077723	HOSE BARB, ELBOW, 90 DEGREE, 1” MALE X 1” HOSE, BANJO, HB100-90	1
6	GA5077859	HOSE BARB, STRAIGHT, 2 FLANGE X 2 HOSE, BANJO, M220BRB	1
7	GA2000071	PLUMBING FITTING, SWEEP ELBOW, 90, 2” FLANGE TO 2” BARB, M220BRBSWP90, BANJO	1
8	GA5076723	SEAL, EPDM, SUIT 3 FLANGE FITTING, BANJO, 300G	2
9	GA2000101	SUCTION FILTER, 3” 32 MESH, 3” BSP MALE THREADS, ARAG	1
10	GA8701503	DECAL, SPRAY PUMP FILTER	1
11	GA8701104	DECAL, TANK SUCTION VALVE	1

Continued over page

Suction Filter Bowl Assembly

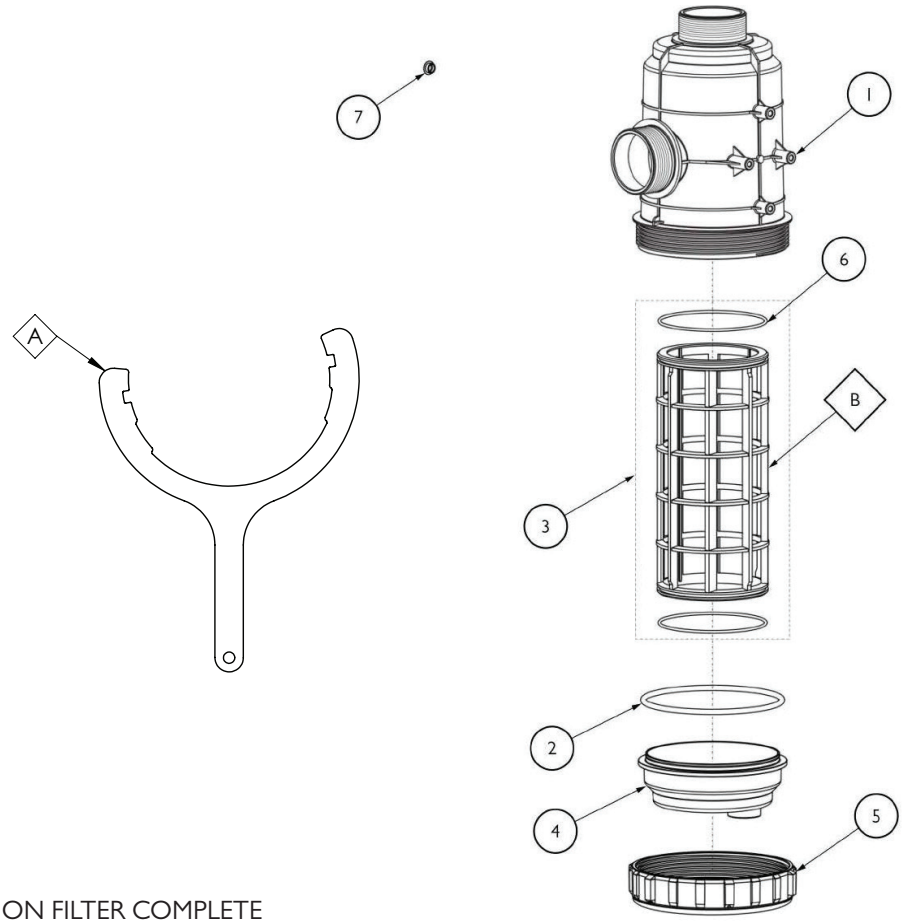

SUCTION FILTER COMPLETE

PART NUMBER	DESCRIPTION
GA2000101	SUCTION FILTER, 3” 32 MESH, 3” BSP MALE THREADS

ITEM NO.	PART NUMBER	DESCRIPTION	QTY.
A	GA4524994	SPANNER, ZINC COATED, 3” SUCTION FILTER, ARAG 319092 GA2000101	-
B	GA2000281	FILTER SCREEN, 145 X 320MM 120 / 32 MESH, SUIT 319 FILTER, GREY, ARAG	-
1	GA2000289	SUCTION FILTER BODY, SUIT ARAG 319, 319090.010	1
2	GA2000290	O RING, 6.99 X 174.6, EPDM, G11052, SUIT ARAG 319	1
	GA2000587	O-RING, 6.99 X 174.6, VITON, G11052V, SUIT ARAG GA2000101	1
3	GA2000561	FILTER SCREEN, 145 X 320MM, 32 MESH, SUIT 319 3” FILTER, “RED”, ARAG	1
	GA2000281	FILTER SCREEN, 145 X 320MM, 120 / 32 MESH, SUIT 319 3” FILTER, “GREY”, ARAG	1
4	GA2000291	319 SUCTION FILTER BOWL, 319090.020	1
5	GA2000292	FLY NUT, SUCTION FILTER BODY, SUIT ARAG 319, 319090.040	1
6	GA5076863	O RING, 136.10 X 3.53, 335000.060	2
	GA5026296	O RING, 136.10 X 3.53, VITON, 335000.060V	2
7	GA2000293	LEVER PLUG, RED, SUIT ARAG 319, 4542233.055	1

Hopper Pressure Tee

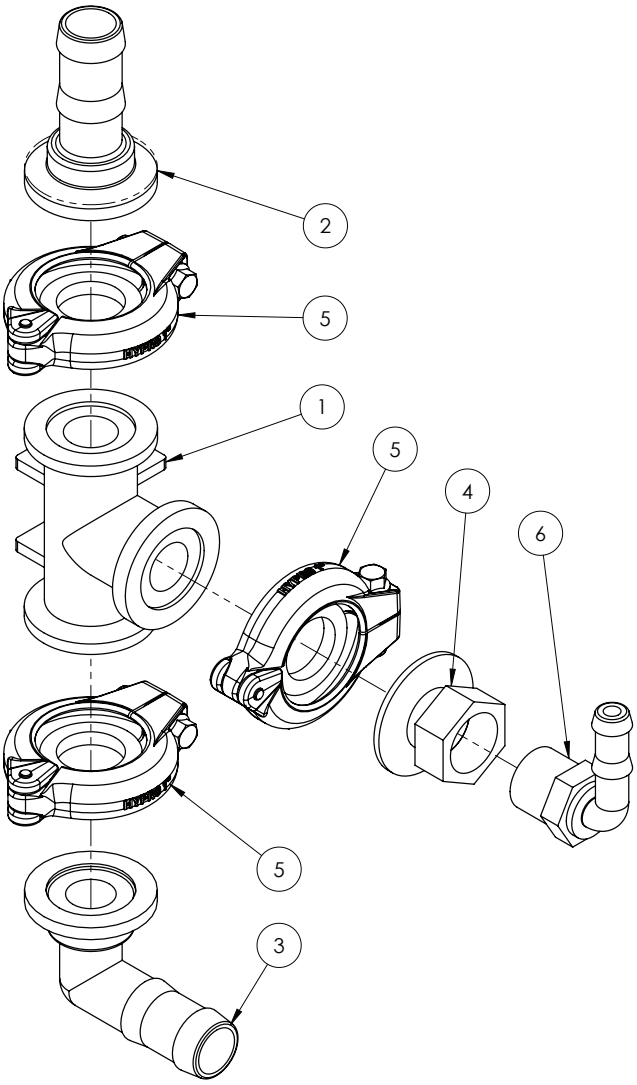

ITEM NO.	PART NUMBER	DESCRIPTION	QTY.
1	GA5077823	TEE, 1" FLANGE X 1" FLANGE X 1" FLANGE	1
2	GA5077811	HOSE BARB, STRAIGHT, 1" FLANGE X 1" HOSE	1
3	GA5077812	HOSE BARB, ELBOW, 90 DEGREE, 1" FLANGE X 1" HOSE	1
4	GA5077804	COUPLING, 1" FLANGE X 3/4" FEMALE THREAD	1
5	GA2000113	FLANGE CLAMP, AND GASKET, 1", SERIES 100, HYPRO	3
6	GA5077710	HOSE BARB, ELBOW, 90 DEGREE, 3/4" MALE THREAD X 1/2" HOSE	1

Flow Distributer & Recirculation Valve

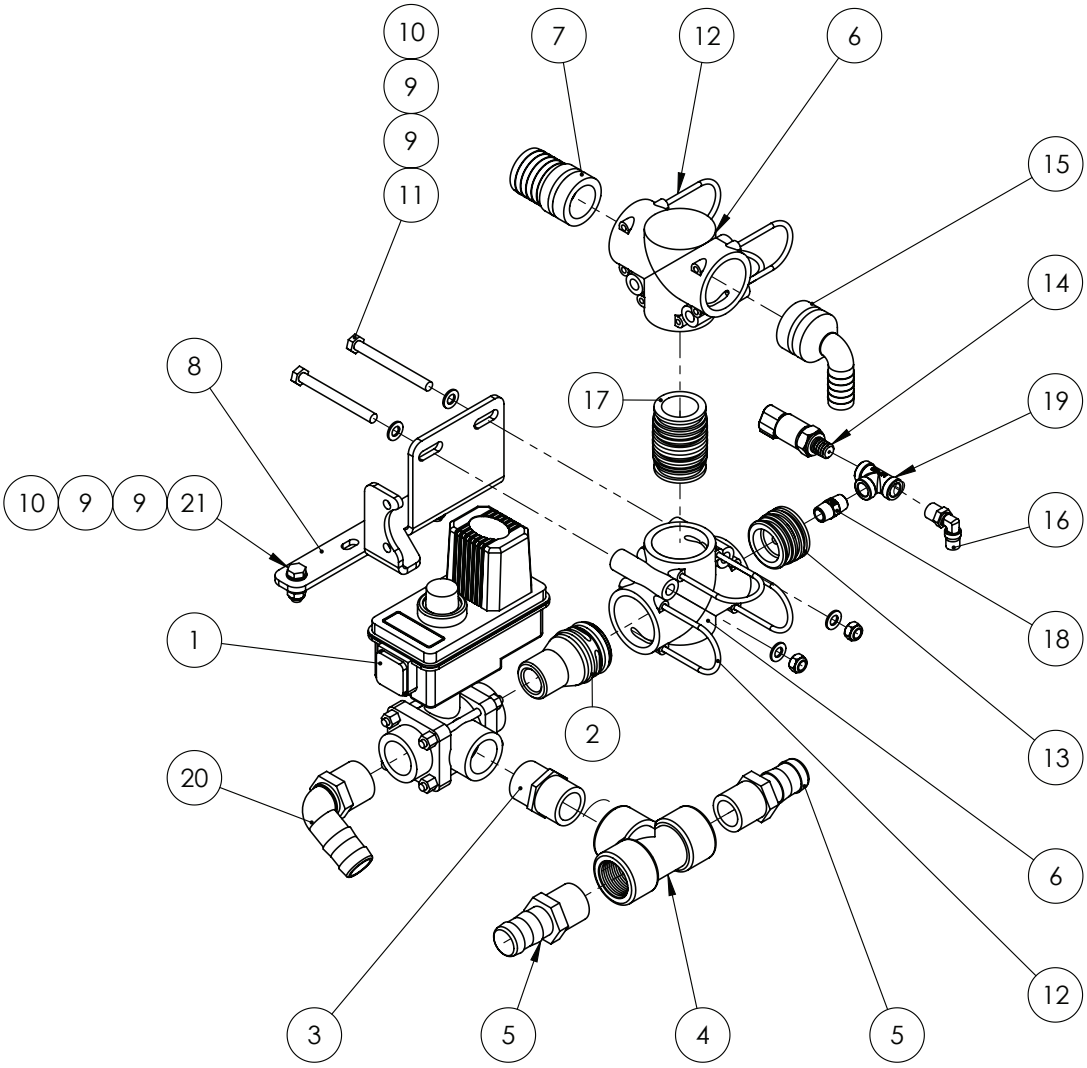

ITEM NO.	PART NUMBER	DESCRIPTION	QTY.
1	GA5077319	VALVE, ELECTRIC BALL 3 WAY, SHUTOFF/BYPASS, 1", TEEJET	1
	GA5077047	REPLACEMENT 12V MOTOR, SUIT TEEJET VALVE GA5077319, BARE WIRES	-
2	GA2000077	PLUMBING FITTING, AS40 TO 1" NPT MALE THREAD, ALTEK	1
3	GA5077914	NIPPLE, SHORT, 1" MALE THREAD X 1" MALE THREAD, BANJO	1
4	GA5078151	TEE, THREADED, 1" FEMALE, BANJO	1
5	GA5077718	HOSE BARB, STRAIGHT, 1" MALE THREAD X 1" HOSE, BANJO	2
6	GA5065555	T-PIECE 3XAS40 NO M8 INSERTS	2
7	GA5065590	PLUG IN HOSE TAIL AS40/39	1
8	GA4400975	PLATE, BRACKET, FLOW DISTRIBUTER AND BOOM RECIRCULATION VALVE ASSEMBLY	1
9	GA5003643	WASHER 8MM FLAT SS HD	8
10	GA5004917	NUT M8 NYLOC ZP	4

Continued over page

Flow Distributer & Recirculation Valve

ITEM NO.	PART NUMBER	DESCRIPTION	QTY.
11	GA5004749	BOLT M8 X 80 GR8.8 ZP	2
12	GA5065690	SAFETY PIN AS40	6
13	GA4582160	PLUMBING ADAPTOR, PLUG, AS40 MALE X G1/4" FEMALE THREAD, ALTEK	1
14	GA3000199	PRESSURE TRANSDUCER, 0-250PSI, 1-5V, DEUTSCH, SEALED, RAVEN	1
15	GA5065610	PLUG IN HOSE TAIL AS40/20/90 DEGREE	1
16	GA5016233	ELBOW - SWIVEL 6MM X 1/4"	1
17	GA5065735	PLUG IN HOSE TAIL AS40/AS40	1
18	GA2000278	PLUMBING FITTING, NIPPLE, 1/4" BSPT, SS, STAINLESS STEEL, LONG, 150 PSI	1
19	GA2000279	PLUMBING FITTING, TEE, 1/4" FEMALE, BSP, SS, STAINLESS STEEL, HIGH PRESSURE	1
20	GA5077723	HOSE BARB, ELBOW, 90 DEGREE, 1" MALE X 1" HOSE, BANJO	1
21	GA5004711	BOLT M8 X 25 GR8.8 ZP	2

Rapidfire Regulator

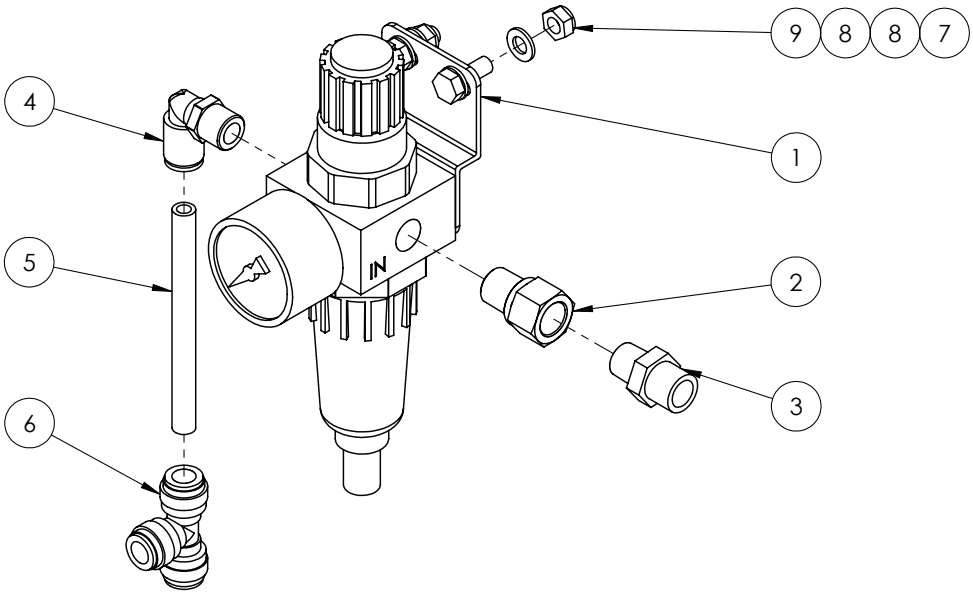

ITEM NO.	PART NUMBER	DESCRIPTION	QTY.
1	GA5078550	AIR FILTER REGULATOR, G1/4, SEMI AUTO DRAIN, WITH BRACKET	1
2	GA5024510	BRASS ADAPTOR, 1/4" BSPP MALE TO 1/4" NPT FEMALE	1
3	GA5078517	AIR FITTING, STRAIGHT, 3/8" TUBE, 1/4" NPT MALE, BRASS	1
4	GA5052690	PNEUMATIC FITTING, ELBOW, 90 DEGREE, 1/4 BSP MALE X 8MM PUSH TYPE, METAL	1
5	GA5004382	TUBE, NYLON, 8MM, BLACK - CUT TO 90 MM	1
6	GA5067010	TEE, EQUAL, 8MM PUSH IN TYPE, BLACK PLASTIC	1
7	GA5004041	BOLT M6 X 16 GR8.8 ZP	2
8	GA5004437	WASHER 6MM FLAT SS	4
9	GA5048115	NUT M6 NYLOC ZP	2

Flow Meter

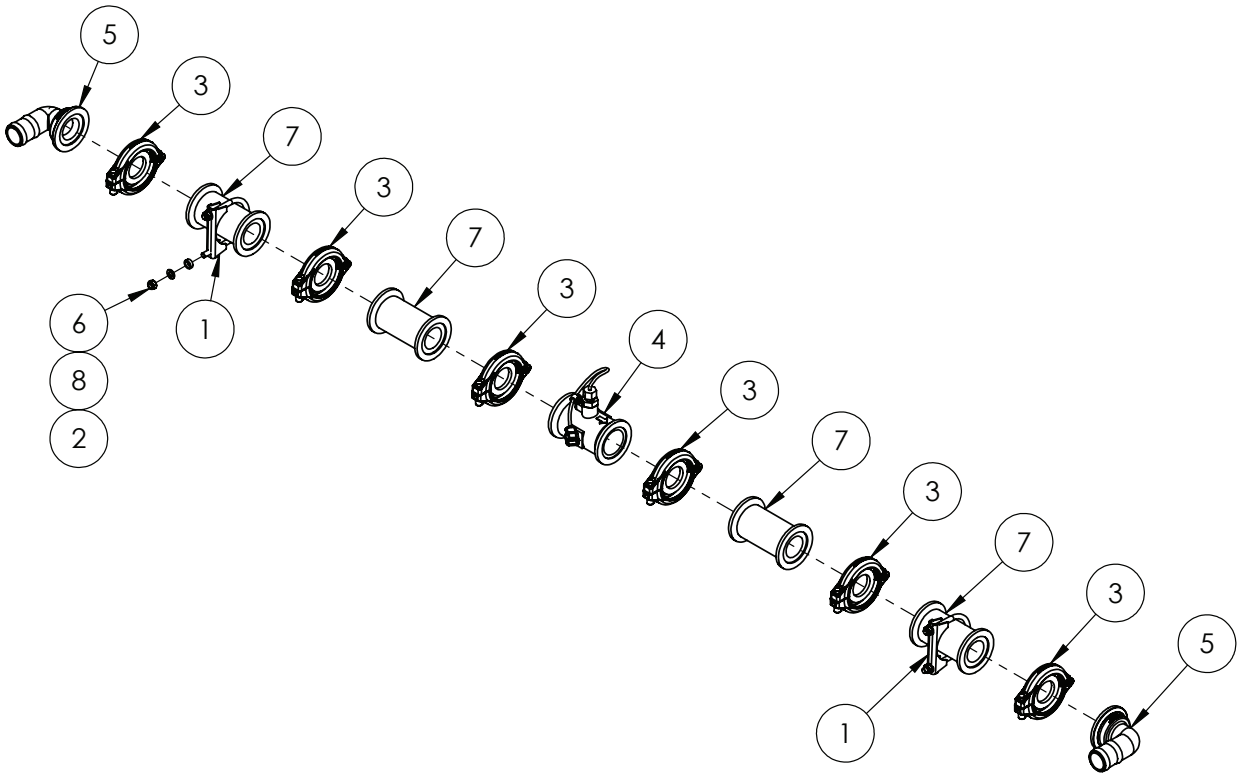

ITEM NO.	PART NUMBER	DESCRIPTION	QTY.
1	GA5006689	CLAMP EXHAUST 2 5/8 (C12)	2
2	GA4552080	CRUSH TUBE, 10.2 ID X 15 OD X 5 mm LONG	4
3	GA2000114	FLANGE CLAMP, AND GASKET, 1.5”, SERIES 200, HYPRO	6
4	GA3000265	FLOWMETER, RFM60P HIGH PULSE, DEUTSCH DTM, RAVEN, 0630172457	1
5	GA5077834	HOSE BARB, ELBOW, 90 DEGREE, 2” FLANGE X 1 1/2” HOSE, BANJO	2
6	GA5052590	NUT M8 NYLOC SS	4
7	GA5077840	PLUMBING COUPLING, STRAIGHT, 2” FLANGE X “ FLANGE X 4 1/2” LONG, BANJO	4
8	GA5003643	WASHER 8mm FLAT SS HD	4

* Sub-assembly on following pages

NOTE: The flange clamps come with a built in seal/gasket.

Flow Meter Assembly

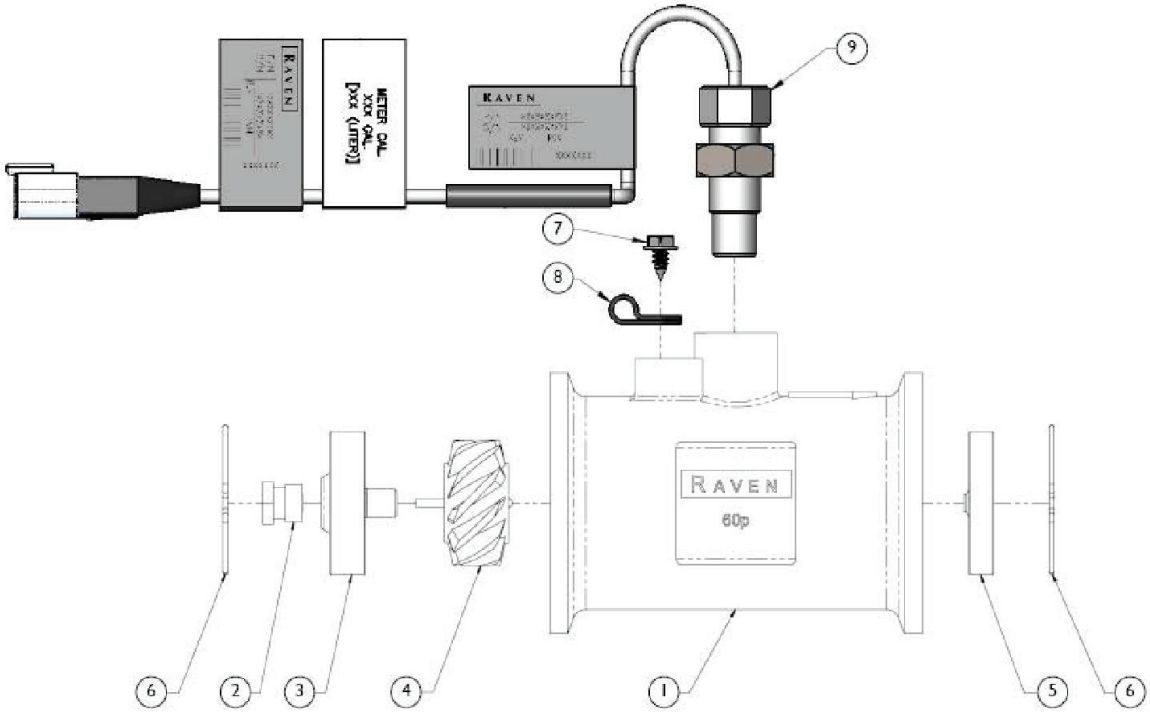

ITEM NO.	PART NUMBER	DESCRIPTION	QTY.
1	GA5075890	FLOWMETER, RFM60P HIGH PULSE, RAVEN,	1
2	GA5026132	TURBINE, STUD, POLY, FLOWMETER, RFM-60	2
3	GA5075870	HUB/BEARING ASY UPSTREAM RFM60	1
4	GA5075869	ROTOR/MAGNET ASY RFM-60S	1
5	GA5075871	BEARING, DOWN STREAM END BEARING SUIT RFM60S FLOW METER, RAVEN, 0630171769	1
6	GA5026133	RETAINING RING, WIREFORM, FLOWMETER, RAVEN RFM-60	2
7	GA5076734	SCW 10-16 X 3/8 SLTD HEX	1
8	GA5076966	CLAMP CABLE PLASTIC 1/4X1/2	1
9	GA3000399	SENSOR, EXTERNAL FLOW METER, HIGH PULSE, SUIT 15P AND 60P, DEUTSCH CONNECTOR, RAVEN, 10630172458B	1

Nozzles - Teejet Single Body

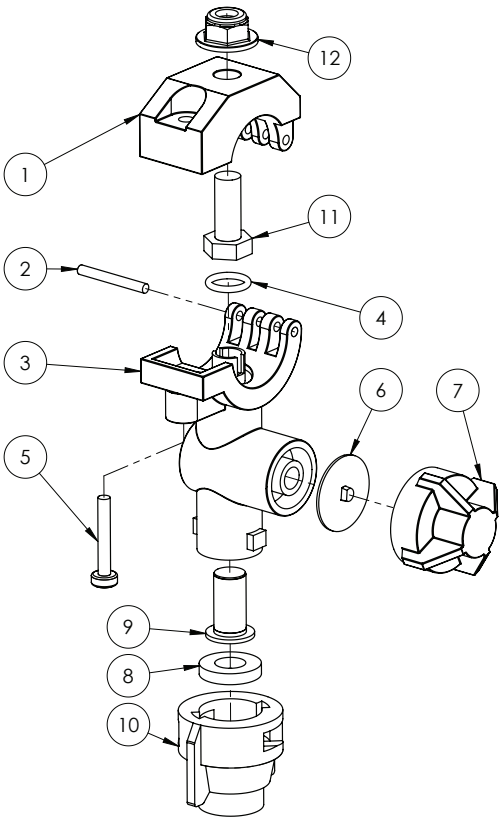

NOTE: Item 6 & 7 are discarded when attaching Spray-Stop

ITEM NO.	PART NUMBER	DESCRIPTION	QTY.
-	GA5077962	NOZZLE BODY, SINGLE, 1", TEEJET	-
1	GA5077533	NOZZLE BODY CLAMP, UPPER, 1", TEEJET	1
2	GA5077537	PIN, NOZZLE BODY CLAMP, TEEJET	1
3	CP48499-NYB	1" NYLON BODY	1
4	GA5077596	O-RING, 14.5 X 2.5MM, BUNA	1
	GA5077597	O-RING, VITON	
5	GA5077536	SCREW, SUIT TEEJET NOZZLE BODIES, 1-1/4" LONG, SS	1
6	GA5077439	CHEMSAVER, DIAPHRAGM, TEEJET	1
	GA5077440	DIAPHRAGM, VITON, NOZZLE BODY CHECK VALVE, TEEJET	
7	GA5076670	CHEMSAVER, 10PSI, BLACK, TEEJET	1
8	GA5055245	WASHER, NOZZLE CAP SEAL, RUBBER, 19 OD X 9MM ID	1
9	GA5077159	FILTER, NOZZLE TIP, RED, 50 MESH, POLYPROPYLENE & SS, TEEJET	1
	GA5077160	NOZZLE FILTER SCREEN, BLUE 80 MESH, POLYPROYLENE / SS, TEEJET	
10	GA8100464	NOZZLE CAP, BLACK, TEEJET, SUIT FLAT SPRAY SMALLER CAPACITY NOZZLES (UP TO 08)	1
	GA8100059	NOZZLE CAP, 10MM ACROSS FLATS, BLACK, LECHLER	
11	GA5004085	BOLT M8 X 20 GR8.8 ZP	1
12	GA5070710	NUT FLANGE PLASTIC M8 X 1.25	1

NOTE: See nozzle tip strainer, cap and nozzle sections on following pages for more detailed nozzle parts guide.

Nozzles - Teejet Clock Face Body

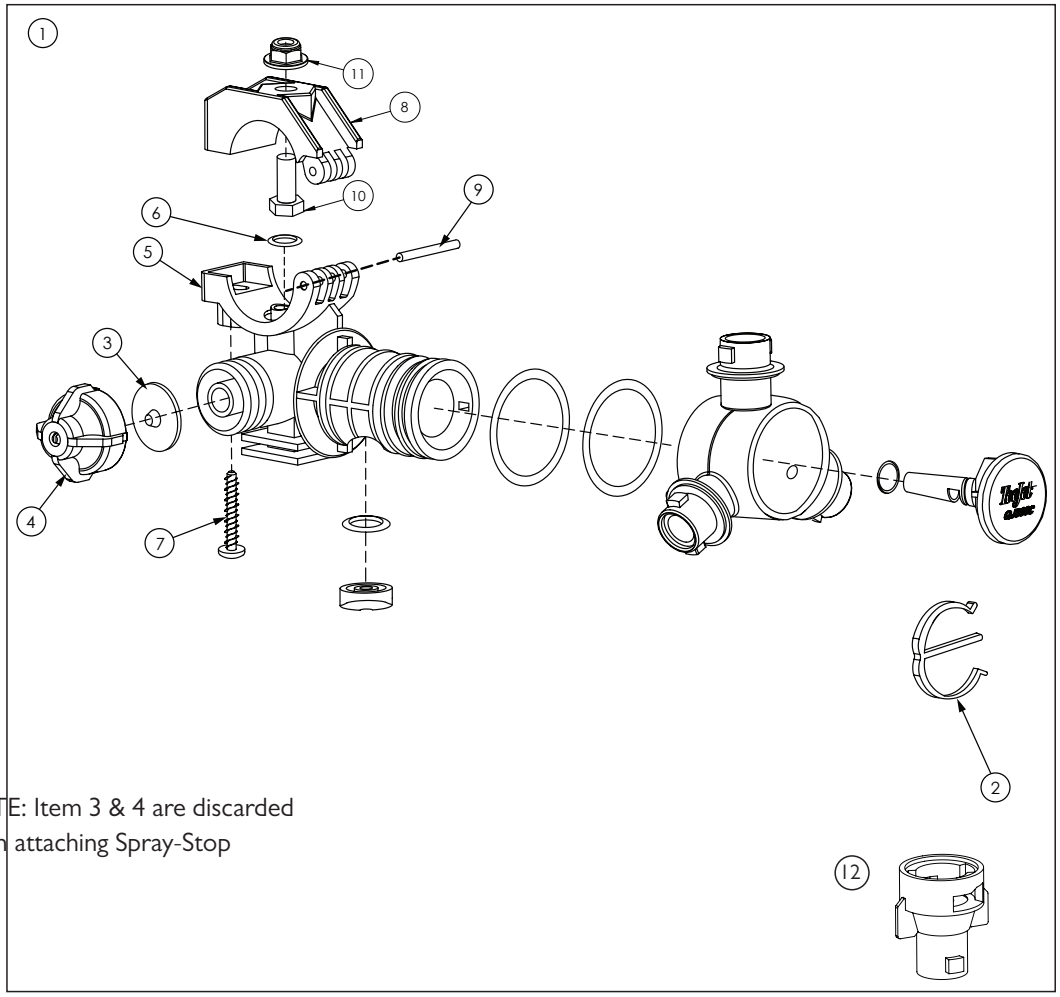

NOTE: Item 3 & 4 are discarded when attaching Spray-Stop

ITEM NO.	PART NUMBER	DESCRIPTION	QTY.
1	GA5077970	NOZZLE BODY, TRIPLE, TRIJET, CLOCK FACE, 1", TEEJET	-
2	GA5077496	E CLIP, NOZZLE BODY, TEEJET	1
3	GA5077439	CHEMSAVER, DIAPHRAGM, TEEJET	1
	GA5077440	DIAPHRAGM, VITON, NOZZLE BODY CHECK VALVE, TEEJET	
4	GA5076670	CHEMSAVER, 10PSI, BLACK, TEEJET	1
5	GA5077494	BODY, 360 SERIES 1'', TEEJET	1
6	GA5077596	O-RING, 14.5 X 2.5MM, BUNA	1
	GA5077597	O-RING, VITON	
7	GA5077536	SCREW, SUIT TEEJET NOZZLE BODIES, 1-1/4" LONG, SS	1
8	GA5077533	NOZZLE BODY CLAMP, UPPER, 1", TEEJET	1
9	GA5077537	PIN, NOZZLE BODY CLAMP, TEEJET	1
10	GA5004085	BOLT M8 X 20 GR8.8 ZP	1
11	GA5070710	NUT FLANGE PLASTIC M8 X 1.25	1
12	GA5077057	NOZZLE BODY EXTENSION, QUICK TEEJET TYPE, 1" LONG, BLACK, TEEJET	1

NOTE: See nozzle tip strainer, cap and nozzle sections on following pages for more detailed nozzle parts guide.

Nozzles - Altek Clamp

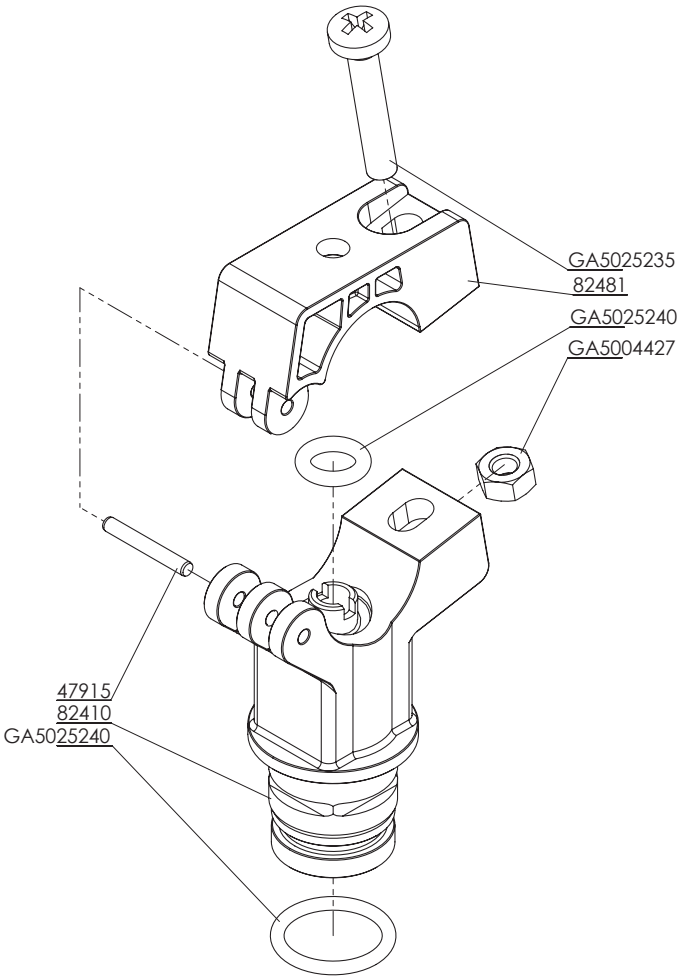

PART NUMBER	DESCRIPTION	QTY.
GA2000133	CLAMP, DUAL NOZZLE BODY, SUIT 1" BOOM POLY, INCLUDES SCREW, NUT AND O RING	-
GA5025235	SCREW, M6, NOZZLE BODY CLAMP, ALTEK	1
82481	NOZZLE BODY CLAMP, UPPER SECTION, ALTEK	1
GA5025240	O-RING, 9.5 X 3 MM EPDM, NOZZLE BODY CLAMP, ALTEK	1
GA5004427	NUT M6 SS	1
47915	PIN, NOZZLE BODY CLAMP, ALTEK	1
82410	NOZZLE BODY CLAMP, LOWER SECTION, ALTEK	1
GA5025245	O-RING, 19 X 2.65 MM FPM80, NOZZLE BODY CLAMP, ALTEK	1

Nozzles - Altek Dual Spray Body

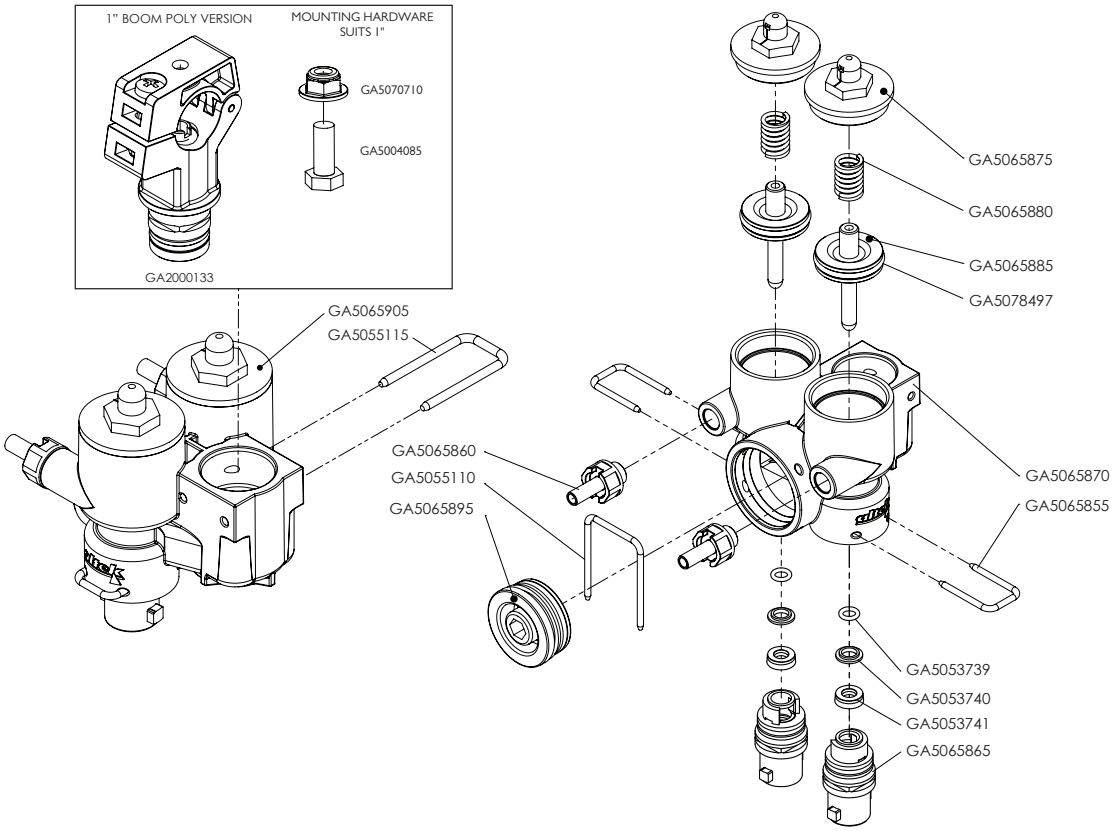

NOZZLE BODY COMPLETE

PART NUMBER	DESCRIPTION
GA8100664	NOZZLE BODY, TWIN / DUAL, AIR SHUT OFF, 1", SLAVE, ALTEK

PART NUMBER	DESCRIPTION	QTY.
GA5070710	NUT FLANGE PLASTIC M8 X 1.25	1
GA5004085	BOLT M8 X 20 GR8.8 ZP	1
GA2000133	NOZZLE BODY CLAMP, SUIT 1" BOOM POLY, INCLUDES SCREW, NUT AND O-RING	1
GA5065905	LOWER BODY, MULTI SPRAY, ALTEK	1
GA5055115	U CLIP, 20 X 40 X 3MM	1
GA5065875	TOP CAP	2
GA5065880	SPRING	2
GA5065885	STAINLESS PISTON COMPLETE WITH O-RING	2
GA5078497	O-RING, 23.5 X 2.6 MM, FPM80	-
GA5065870	OUTER BODY	1
GA5065855	U-CLIP	2
GA5065865	OUTLET, VALVE INNER, NOZZLE BODY, ALTEK	2
GA5065860	HOSE BARB, AIR FITTING, 6MM HOSE, MALE THREAD, INCLUDES SEAL	2
GA5055110	U CLIP 30 X 41 X 2.5MM	1
GA5065895	SHUTOFF PLUG	1
GA5053739	O-RING, 5.6MM X 1.8MM FMP, SUIT GA5065845, ALTEK	2
GA5053740	RETAINING DISK, 11.8MM X 6.8MM X 2MM, SUIT GA5065845, ALTEK	2
GA5053741	LIP SEAL, 6MM X 12MM X 4.2MM FMP, SUIT GA5065845, ALTEK	2

Nozzles - Altek Spray Stop - Push On Type

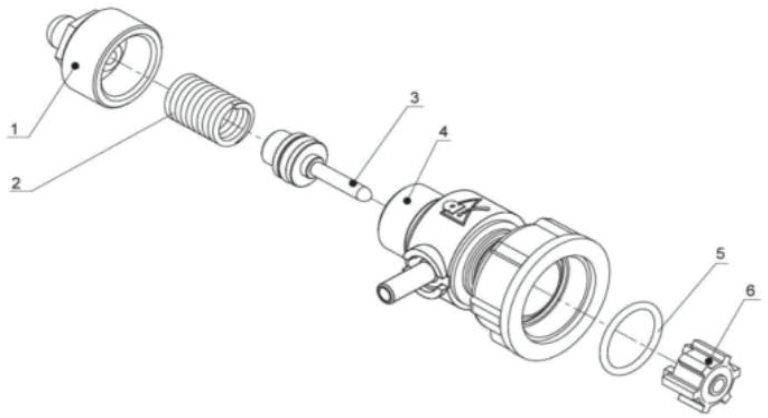

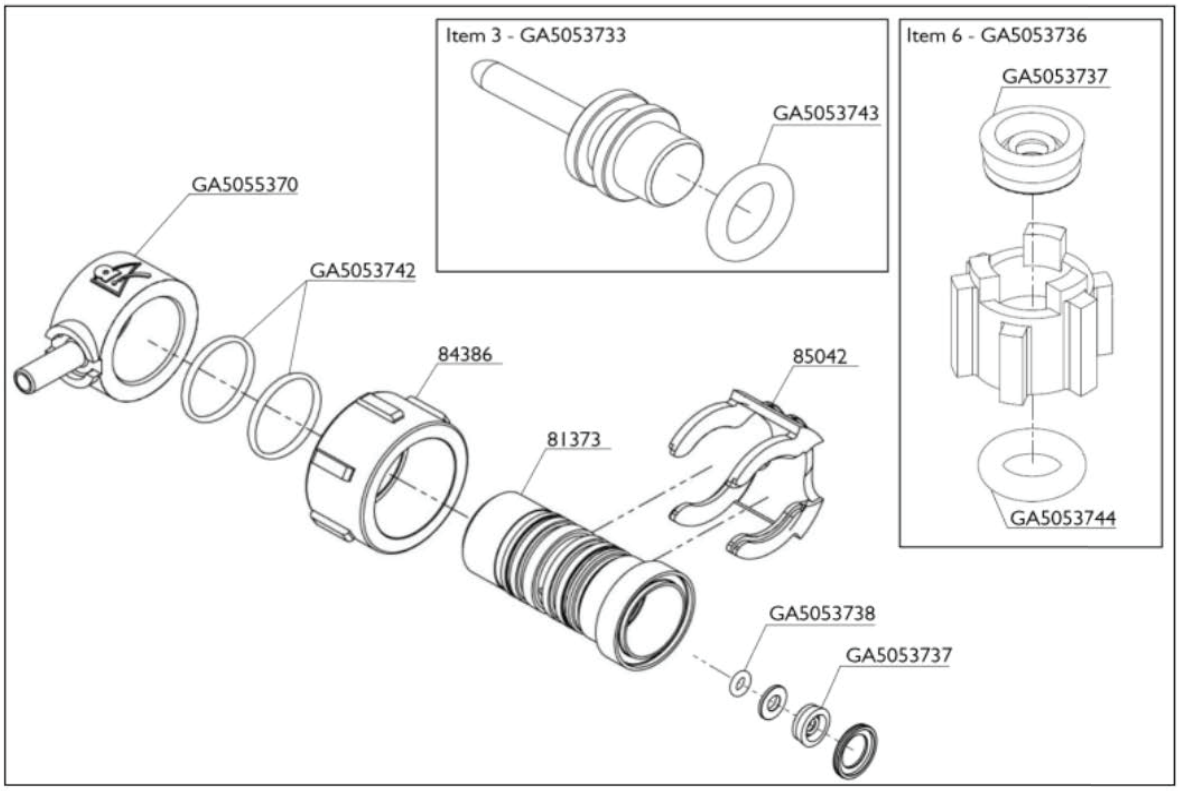

ITEM NO.	PART NUMBER	DESCRIPTION	QTY.
-	GA5065520	SPRAY STOP, RAPIDFIRE, SUIT TEEJET NOZZLE BODY, ALTEK	-
1	GA5053731	END CAP WITH BREATHER	1
2	GA5053732	SPRING, 10 BAR	1
3	GA5053733	PISTON	1
4	GA5053734	VALVE BODY	1
5	GA5053735	O-RING EXTERNAL	1
6	GA5053736	PLUNGER	1

Nozzles - Altek Spray Stop - Push In Type

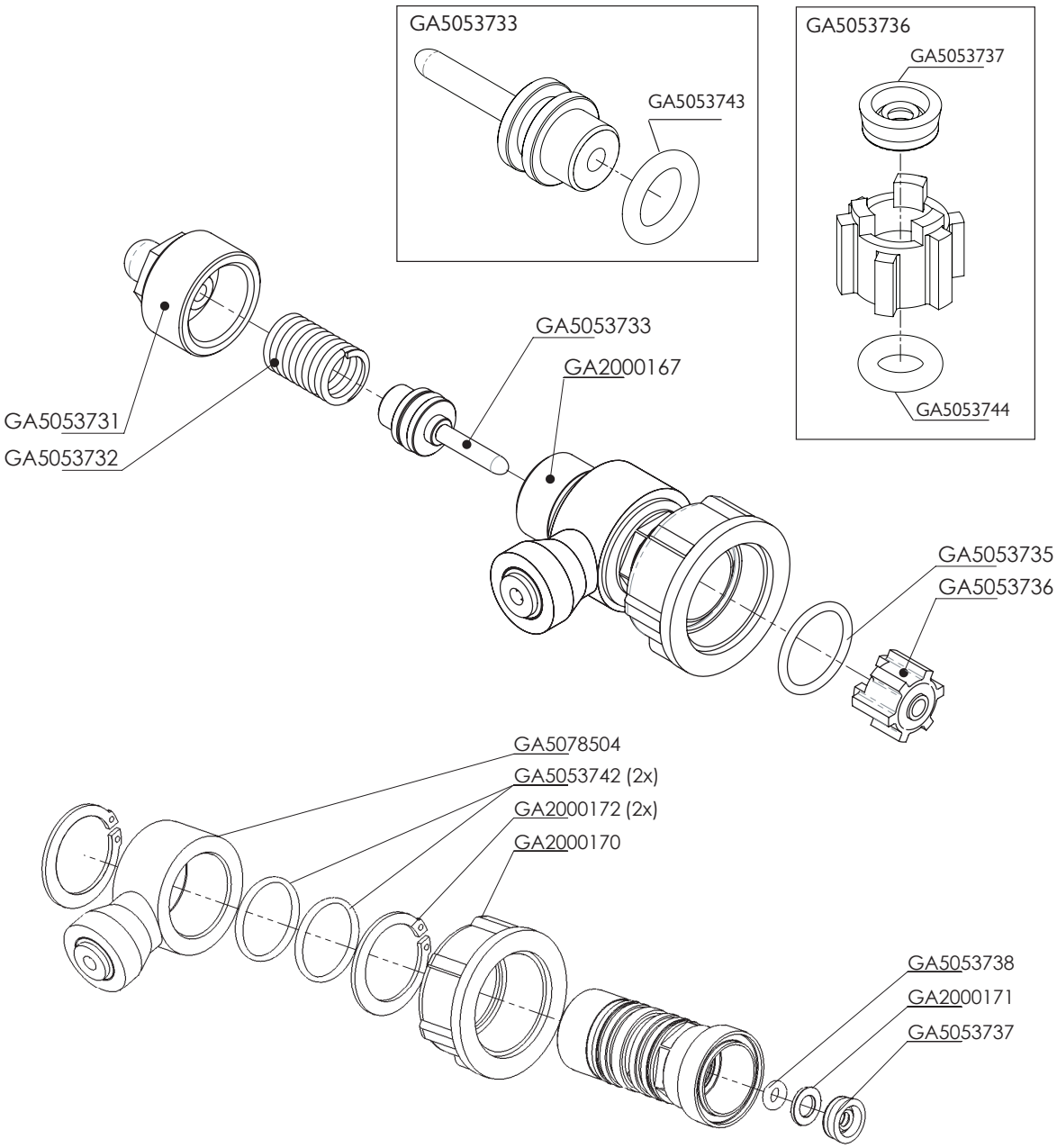

PART NUMBER	DESCRIPTION	QTY.
GA5065523	SPRAY STOP, 4MM, RAPIDFIRE, SUIT TEEJET NOZZLE BODY, ALTEK	-
GA5053731	END CAP WITH BREATHER	1
GA5053732	SPRING, 10 BAR	1
GA5053733	PISTON	1
GA5053734	VALVE BODY	1
GA5053735	O-RING EXTERNAL	1
GA5053736	PLUNGER	1

Nozzles - Direct Control - Single

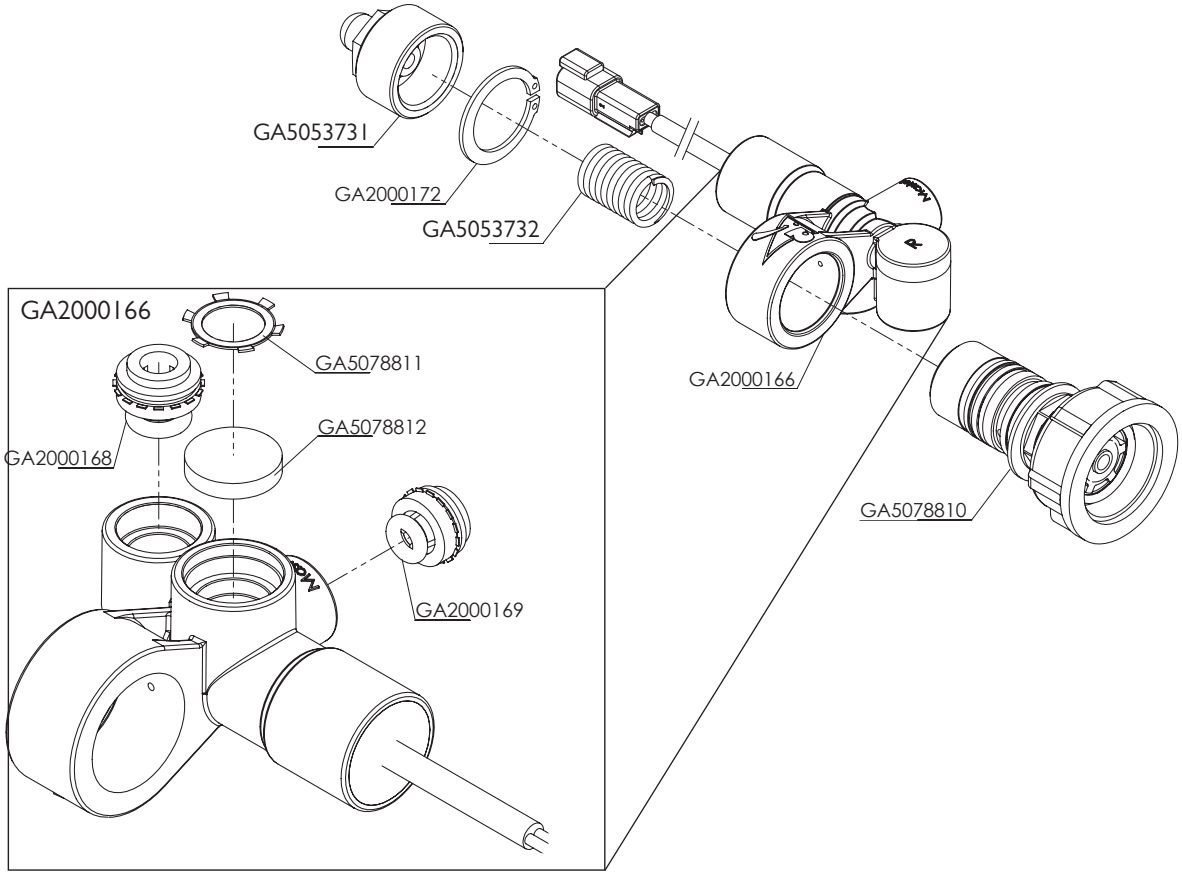

PART NUMBER	DESCRIPTION	QTY.
GA5065525	SPRAY STOP, SOLENOID DIRECT CONTROL, RAPIDFIRE, 6MM IN, 4MM OUT	-
GA5053731	END CAP WITH BREATHER, SUIT GA5065520 SPRAY STOP, ALTEK	1
GA2000172	CIRCLIP, SPRAY STOP, ALTEK, 81376	1
GA5053732	SPRING, 10 BAR, SUIT SPRAY STOP, ALTEK	1
GA2000166	SINGLE NOZZLE BODY ASSEMBLY, DIRECT CONTROL, DEUTSCH CONNECTOR	1
GA5078810	CARTRIDGE, SPRAY-STOP, TEEJET, 83224	1
GA5078811	CLIP, BREATHER RETAINER, ALTEK, 84033	1
GA5078812	BREATHER INSERT, DIRECT CONTROL, ALTEK, 84003	1
GA2000168	INLET CARTRIDGE, 6MM, PLASTIC, INCLUDES O-RING, ALTEK, 83250	1
GA2000169	OULET CARTRIDGE, 4MM, PLASTIC, INCLUDES O-RING, ALTEK, 83759	1

Nozzles - Direct Control - Dual

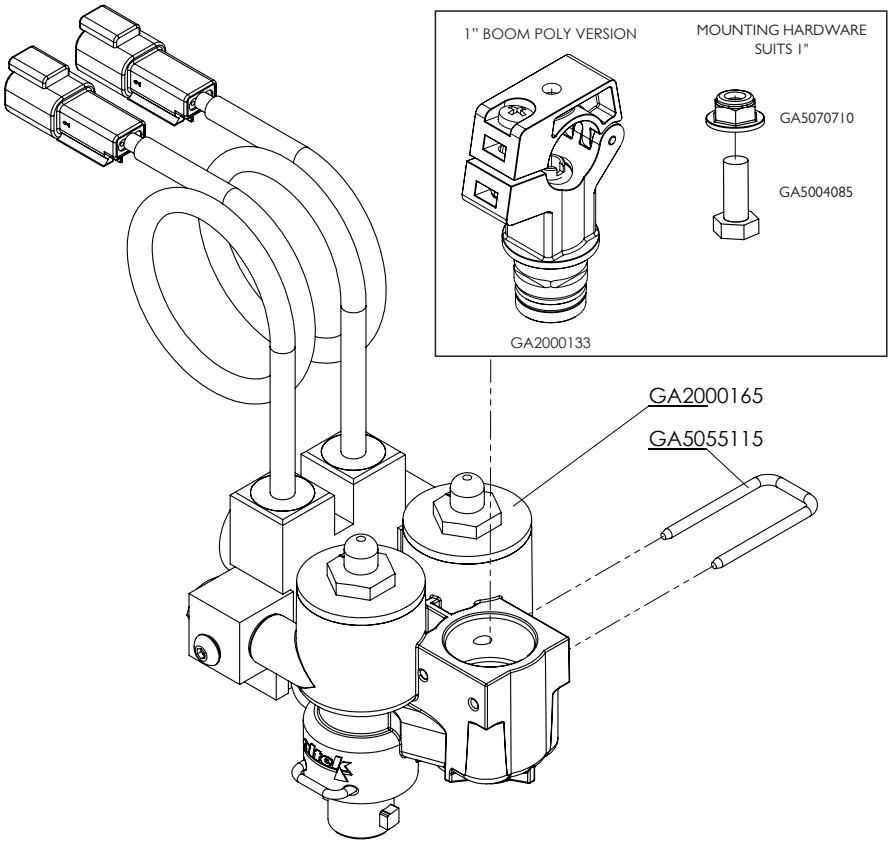

NOZZLE BODY COMPLETE

PART NUMBER	DESCRIPTION
GA8100663	NOZZLE BODY, TWIN / DUAL, AIR SHUT OFF, 1", MASTER, ALTEK

PART NUMBER	DESCRIPTION	QTY.
GA5070710	NUT FLANGE PLASTIC M8 X 1.25	1
GA5004085	BOLT M8 X 20 GR8.8 ZP	1
GA2000133	NOZZLE BODY CLAMP, SUIT 1" BOOM POLY, INCLUDES SCREW, NUT AND O-RING	1
GA2000165	DUAL NOZZLE BODY ASSEMBLY, DIRECT CONTROL	1
GA5055115	U CLIP, 20 X 40 X 3 MM, 82297, SUIT ALTEK NOZZLE BODY GA5065845	1

Nozzles - Direct Control - Dual Assembly

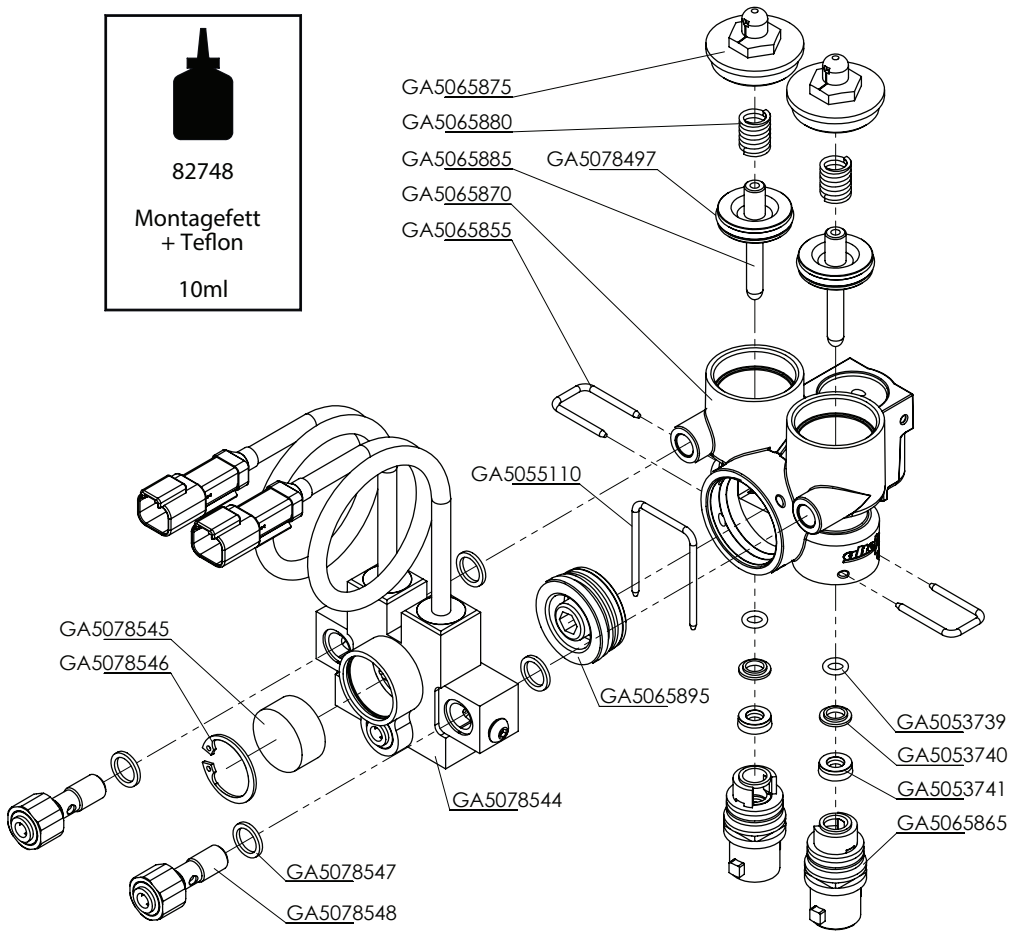

PART NUMBER	DESCRIPTION	QTY.
GA5078544	DUAL SOLENOID VALVE, INCLUDING 200MM CABLES & DEUTSCH CONNECTORS	1
GA5065870	HOUSING MULTI-SPRAY 2-NOZZLE	1
GA5053739	O-RING	2
GA5053740	STAINLESS WASHER	2
GA5053741	LIP SEAL 6 X 12 X 4.2 MM	2
GA5065865	NOZZLE HOLDER 5° COMPLETE, 0°, 0°	2
GA5065855	U-CLIP AS20	2
GA5065885	STAINLESS PISTON COMPLETE WITH O-RING	2
GA5078497	O-RING, 23.5 X 2.6 MM, FPM80	-
GA5065880	SPRING	2
GA5065875	CYLINDER CAP	2
GA5065895	BLANKING PLUG	1
GA5055110	U-CLIP 30 X 41 X 2.5 MM	1
GA5078547	SEAL, WHITE PVC	4
GA5078545	BREATHER INSERT, 25.5 X 12 X 12 MM	1
GA5078546	CIRCLIP, 26 X1.2 MM	1
GA5078548	PUSH FITTING, AIR LINE, 6MM	2

Nozzles - Fence Line - Solenoid Operated

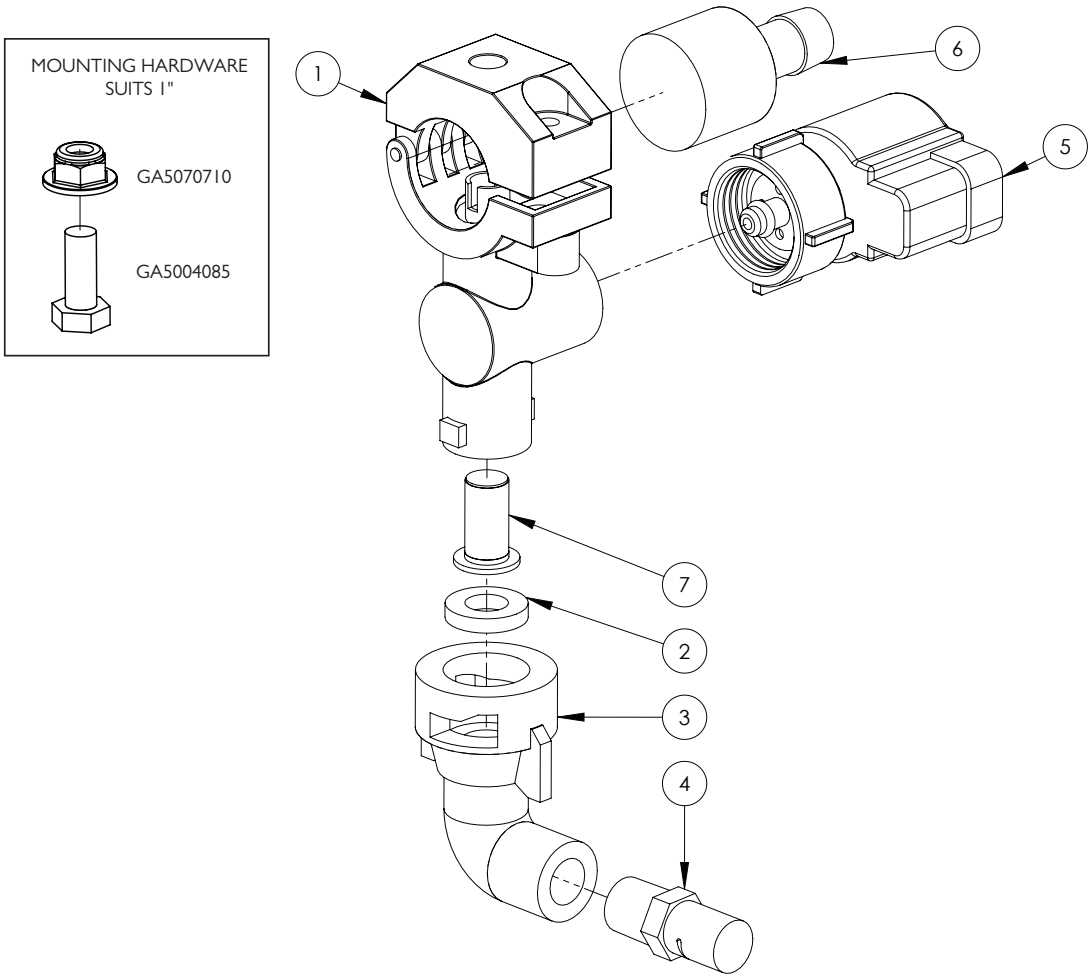

ITEM NO.	PART NUMBER	DESCRIPTION	QTY.
1	GA5077962	NOZZLE BODY, SINGLE, 1, TEEJET, QJ17560A-1-NYB	1
	GA5070710	NUT FLANGE PLASTIC M8 X 1.25	1
	GA5004085	BOLT M8 X 20 GR8.8 ZP	1
2	GA5055245	WASHER, NOZZLE CAP SEAL, RUBBER, 19 OD X 9MM ID	1
3	GA5077986	NOZZLE CAP & WASHER, 90 DEGREE CAP, 1/4" NPT FEMALE OUTLET	1
4	GA8100339	NOZZLE, FENCE LINE, ORANGE, POLYMER, LEFT SIDE, 1/4" NPT, TEEJET	1
	GA8100340	NOZZLE, FENCE LINE, ORANGE, POLYMER, RIGHT SIDE, 1/4" NPT, TEEJET	1
5	GA5071785	SOLENOID, E-CHEMSAVER SUIT 2 PIN METRI-PACK, FENCE LINE	1
6	GA5077497	HOSE BARB SUIT NOZZLE BODY, SINGLE 1/2”, NYLON, TEEJET	1
7	GA5076947	CHECK VALVE & FILTER SCREEN, NOZZLE TIP, 5PSI VALVE, 50 MESH	1

Nozzles - Tip Strainers

PART NUMBER	DESCRIPTION
GA5076947	TIP STRAINER, CHECK VALVE, 5 PSI, POLYPROPYLENE / STAINLESS STEEL, 50 MESH, TEEJET
GA5077158	TIP STRAINER, POLYPROPYLENE / STAINLESS STEEL, 24 MESH, TEEJET
GA5077159	TIP STRAINER, POLYPROPYLENE / STAINLESS STEEL, 50 MESH, TEEJET
GA5077160	TIP STRAINER, POLYPROPYLENE / STAINLESS STEEL, 80 MESH, TEEJET
GA5077156	TIP STRAINER, POLYPROPYLENE / STAINLESS STEEL, 100 MESH, TEEJET
GA5077157	TIP STRAINER, POLYPROPYLENE / STAINLESS STEEL, 200 MESH, TEEJET

Nozzles - IDK - Cap

PART NUMBER	DESCRIPTION
GA8100059	CAP TO SUIT IDK NOZZLE
GA5055245	CAP WASHER, IDK NOZZLE

Nozzles - IDK - Tips

PART NUMBER	DESCRIPTION	STRAINER
GA8100018	IDK 120-01, ORANGE, LECHLER	80 MESH
GA8100019	IDK 120-015, GREEN, LECHLER	50 MESH
GA8100020	IDK 120-02, YELLOW, LECHLER	50 MESH
GA8100021	IDK 120-025, PURPLE, LECHLER	50 MESH
GA8100022	IDK 120-03, BLUE, LECHLER	50 MESH
GA8100023	IDK 120-04, RED, LECHLER	50 MESH
GA8100024	IDK 120-05, BROWN, LECHLER	24 MESH
GA8100025	IDK 120-06, GREY, LECHLER	24 MESH
GA8100026	IDK 120-08, WHITE, LECHLER	24 MESH

Nozzles - ID3 - Cap

PART NUMBER	DESCRIPTION
GA8100059	CAP TO SUIT ID3 NOZZLE
GA5055245	CAP WASHER, ID3 NOZZLE

Nozzles - ID3 - Tips

PART NUMBER	DESCRIPTION	STRAINER
GA8100000	ID3 120-01, ORANGE, LECHLER	80 MESH
GA8100001	ID3 120-015, GREEN, LECHLER	50 MESH
GA8100002	ID3 120-02, YELLOW, LECHLER	50 MESH
GA8100003	ID3 120-025, PURPLE, LECHLER	50 MESH
GA8100004	ID3 120-03, BLUE, LECHLER	50 MESH
GA8100005	ID3 120-04, RED, LECHLER	50 MESH
GA8100006	ID3 120-05, BROWN, LECHLER	24 MESH
GA8100007	ID3 120-06, GREY, LECHLER	24 MESH
GA8100008	ID3 120-08, WHITE, LECHLER	24 MESH

Nozzles - AIXR - Tips

PART NUMBER	DESCRIPTION	STRAINER
GA8100429	AIXR110015VP, GREEN 015, POLYMER, TEEJET	100 MESH
GA8100430	AIXR110025VP, VIOLET 025, POLYMER, TEEJET	50 MESH
GA8100431	AIXR11002VP, YELLOW 02, POLYMER, TEEJET	50 MESH
GA8100432	AIXR11003VP, BLUE 03, POLYMER, TEEJET	50 MESH
GA8100433	AIXR11004VP, RED 04, POLYMER, TEEJET	50 MESH
GA8100434	AIXR11005VP, BROWN 05, POLYMER, TEEJET	50 MESH
GA8100435	AIXR11006VP, GREY 06, POLYMER, TEEJET	50 MESH

NCV Control Valve - Hawkeye 2

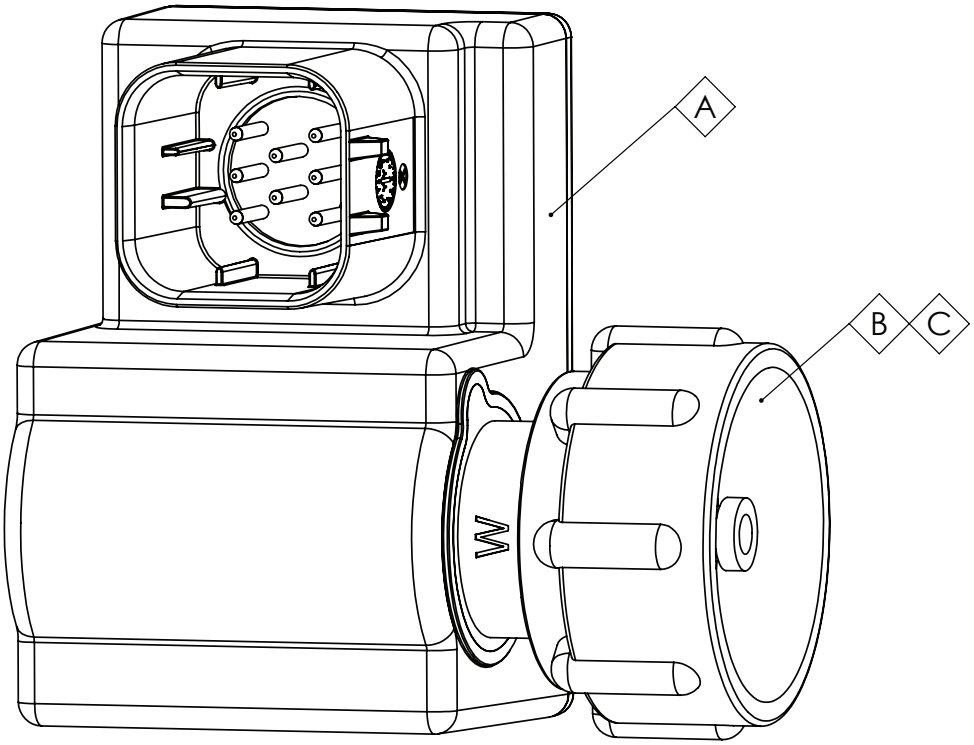

ITEM NO.	PART NUMBER	DESCRIPTION	QTY.
-	GA3000511	NCV, NOZZLE CONTROL VALVE, PWM, HAWKEYE 2, SUIT TEEJET, WITH O-RING, RAVEN 10632005001	-
-	GA3000530	NCV PLUNGERS AND SEALS HAWKEYE 2, 100 KIT, VITON, BLACK 11172005064	-
-	GA3000531	NCV SEVERE DUTY PLUNGERS AND SEALS HAWKEYE 2, 100 KIT, VITON EXTREME, YELLOW, 11171005216	
A	GA3000525	NCV REPAIR SERVICE KIT, INDIVIDUAL, HAWKEYE 2, SUIT TEEJET, RAVEN, 11172005060	-
B	GA3000528	O-RING, 38 PACK, VITON BLACK SIZE -116, SUIT HAWKEYE 2 NCV, TEEJET TURRET, 121920051 16M	-
C	GA3000529	O-RING, 38 PACK, VITON PURPLE SIZE -115, SUIT HAWKEYE 2 NCV, TEEJET TURRET, 121920051 15M	-

Plumbing Lines - Nozzle Brackets

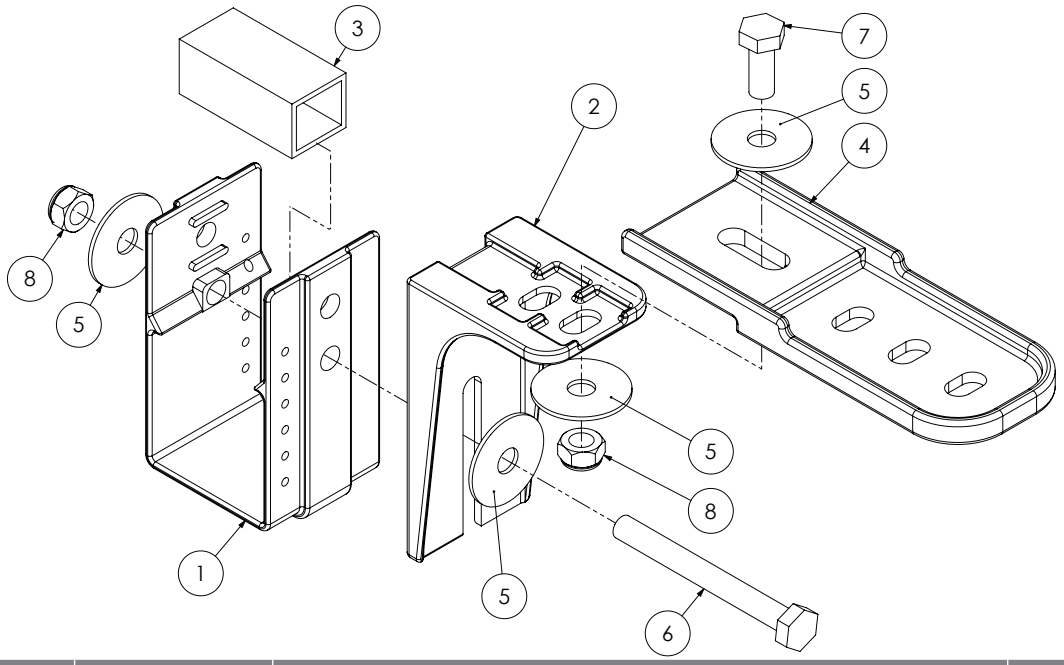

ITEM NO.	PART NUMBER	DESCRIPTION	QTY
1	GA5018259	NOZZLE BRACKET, PLASTIC, U SHAPE	1
2	GA5018257	NOZZLE BRACKET, PLASTIC, L SHAPE, SHORT	1
	GA5018258	NOZZLE BRACKET, PLASTIC, L SHAPE, LONG	
3	GA5066965	SPACER SUIT NOZZLE BRACKETS	1
4	GA5018255	BRACKET, NOZZLE EXTENSION, PLASTIC	1
5	GA5003645	WASHER 5/16" ID X 1 1/4" OD FLAT SS	4
6	GA5004741	BOLT M8 X 75 GR8.8 ZP	1
7	GA5004085	BOLT M8 X 20 GR8.8 ZP	1
8	GA5004917	NUT M8 NYLOC ZP	2

Plumbing Lines - Nozzle Bracket Kits

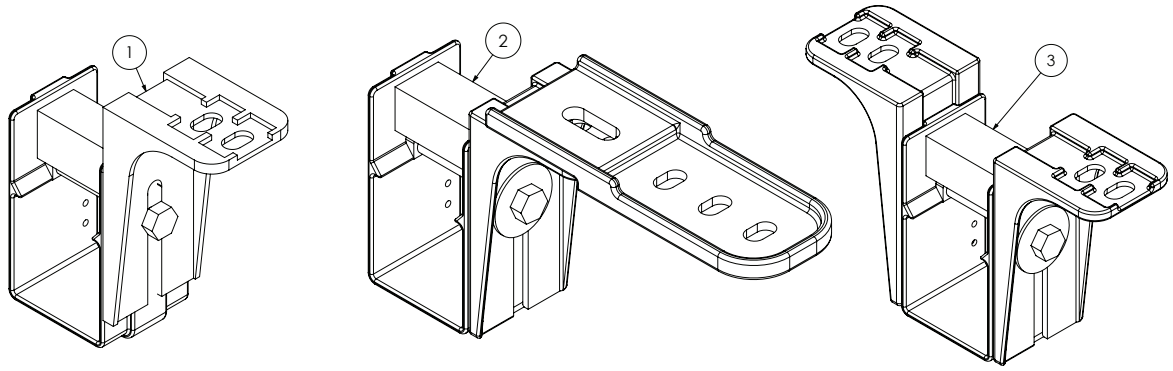

ITEM NO.	PART NUMBER	DESCRIPTION
1	GA4948675-SK	NOZZLE BRACKET KIT, SINGLE LINE, SUIT 50MM RHS
2	GA4948695-SK	NOZZLE BRACKET KIT, SINGLE LINE WITH EXTENSION, SUIT 50MM RHS
3	GA4948685-SK	NOZZLE BRACKET KIT, DUAL LINE, SUIT 50MM RHS

Plumbing Lines - Miscellaneous

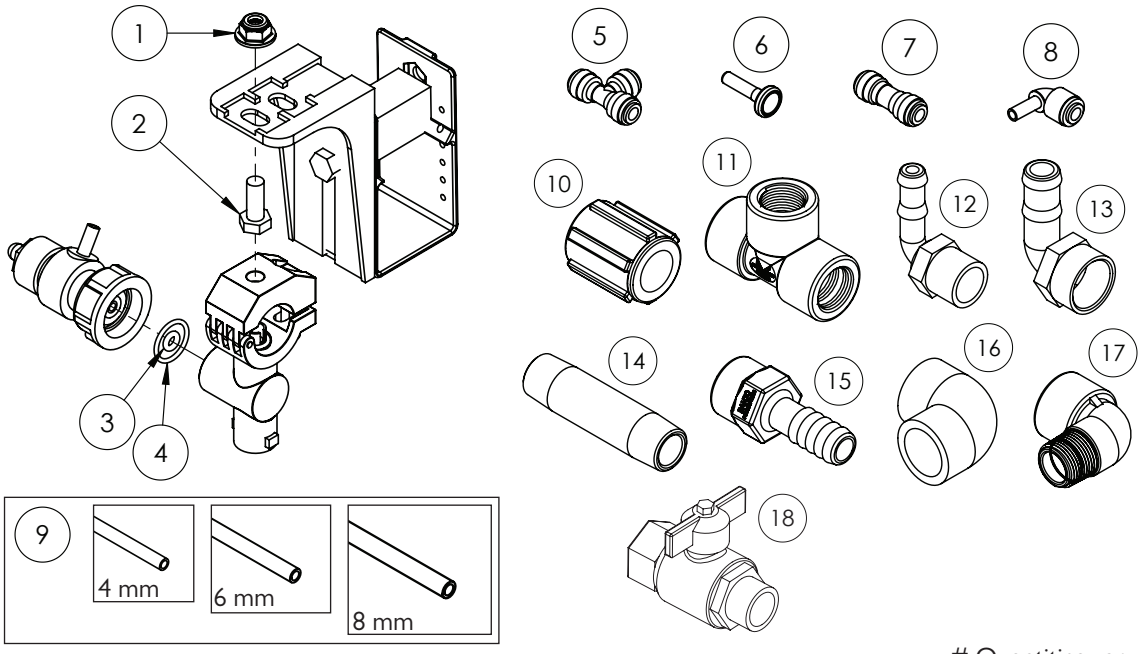

Quantities vary

ITEM NO.	PART NUMBER	DESCRIPTION	QTY.
1	GA5070710	NUT WITH FLANGE, PLASTIC, M8 X 1.25P	#
2	GA5004085	BOLT M8 X 20 GR8.8 ZP	#
3	GA5065521	O RING, 6.02 X 2.62 MM, SUITS SPRAY STOP INNER	#
4	GA5053135	O RING, 18 X 2 MM, SUIT SPRAY STOP OUTER	#
5	GA5016246	TEE, EQUAL, 4MM PUSH IN TYPE, BLACK PLASTIC	#
	GA5016245	TEE, EQUAL, 6MM PUSH IN TYPE, BLACK PLASTIC	#
	GA5067010	TEE, EQUAL, 8MM PUSH IN TYPE, BLACK PLASTIC	#
6	GA5004405	PLUG, PUSH IN, 6MM	#
7	GA5066991	PNEUMATIC FITTING, 6MM PUSH IN, EQUAL JOINER, PLASTIC	#
	GA7000023	PNEUMATIC FITTING, 8MM PUSH IN, EQUAL JOINER, PLASTIC	#
	GA5054600	PUSH IN FITTING, REDUCER, STRAIGHT, 6MM TO 4MM	#
	GA5065175	PUSH IN FITTING, REDUCER, STRAIGHT, 8MM TO 6MM	#
8	GA5071215	STEM ELBOW, SUIT 6MM AIR LINE, PUSH IN	#
9	GA5004384	TUBE, NYLON, 4MM, BLACK	#
	GA5004386	TUBE, NYLON, 4MM, BLUE	#
	GA5004383	TUBE, NYLON, 6MM, BLACK	#
	GA5004385	TUBE, NYLON, 6MM, BLUE	#
	GA7000002	TUBE, NYLON, 6MM, RED	#
	GA5004382	TUBE, NYLON, 8MM, BLACK	#
10	GA5077637	COUPLING, SOCKET, 3/4" FEMALE THREAD	#
	GA5077638	COUPLING, SOCKET, 1" FEMALE THREAD	#
11	GA5078151	TEE, THREADED, 1” FEMALE	#

Continued over page

Plumbing Lines - Miscellaneous

ITEM NO.	PART NUMBER	DESCRIPTION	QTY.
12	GA5077723	HOSE BARB, ELBOW, 90 DEGREE, 1” MALE THREAD X 1” HOSE	#
13	GA5077746	HOSE BARB, ELBOW, 90 DEGREE, 3/4" FEMALE THREAD X 3/4" HOSE	#
14	GA5049090	BSP RISER 3/4" X 100 MM	#
15	GA5077747	HOSE BARB, STRAIGHT, 1" FEMALE THREAD X 1" HOSE	#
16	GA5077655	STREET ELBOW, 90 DEGREE, 1" FEMALE THREAD	#
17	GA5078137	STREET ELBOW, 90 DEGREE, 1” FEMALE THREAD X 1” MALE THREAD	#
18	GA5018315	VALVE, BALL, 20MM MALE & FEMALE THREAD, BLACK BUTTERFLY HANDLE	#

Boom Poly - 1" - 6000mm - 36-48m

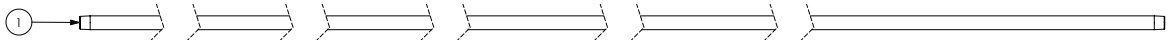

ITEM NO.	PART NUMBER	DESCRIPTION
1	GA2000130	BOOM LINE, POLY, 1”, 6000MM LENGTH, NO HOLES

Boom Plumbing 36m

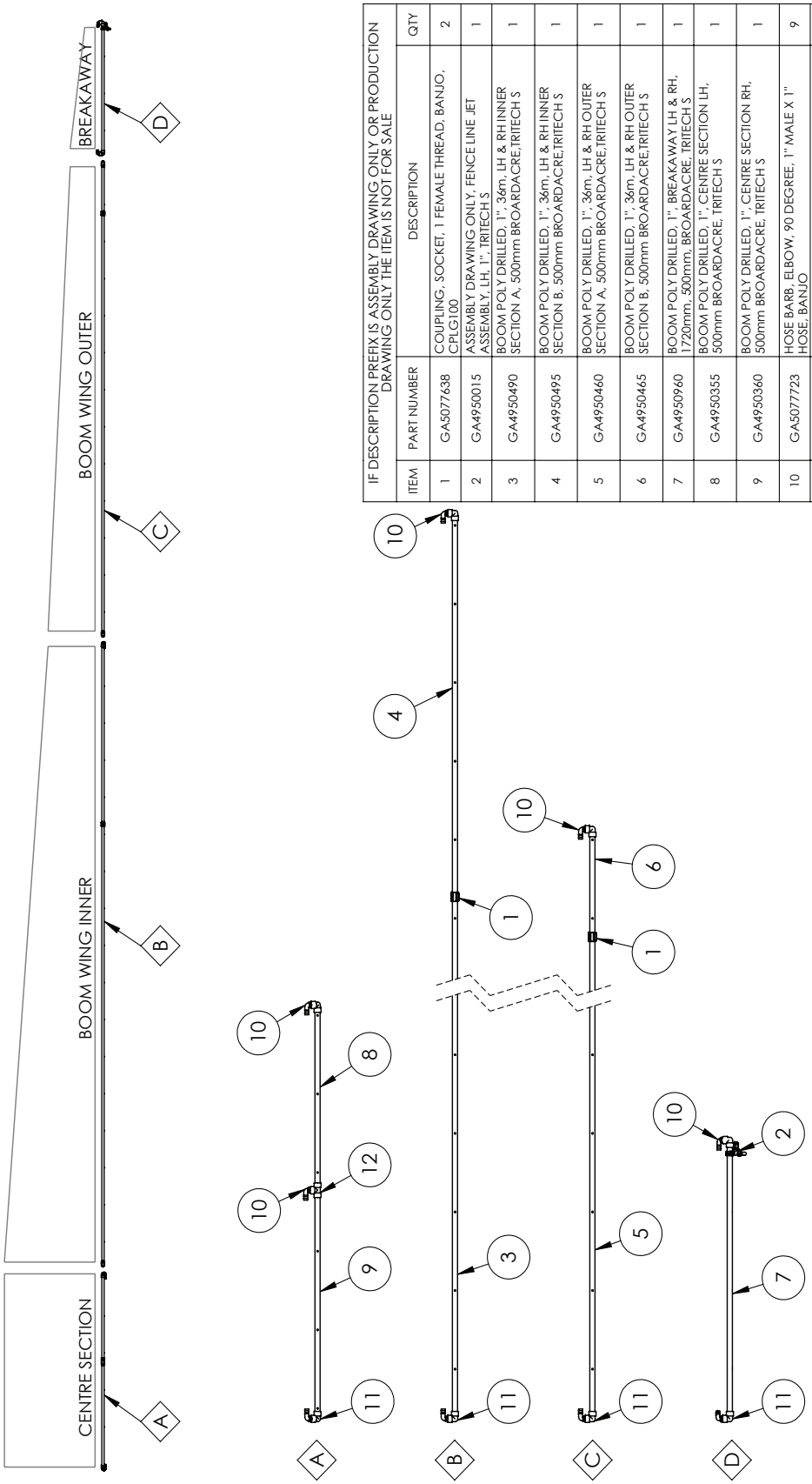

IF DESCRIPTION PREFIX IS ASSEMBLY DRAWING ONLY OR PRODUCTION DRAWING ONLY THE ITEM IS NOT FOR SALE

ITEM	PART NUMBER	DESCRIPTION	QTY
1	GA5077638	COUPLING, SOCKET, 1 FEMALE THREAD, BANJO, CPLG100	2
2	GA4950015	ASSEMBLY DRAWING ONLY, FENCE LINE JET ASSEMBLY, LH, 1", TRITECH S	1
3	GA4950490	BOOM POLY DRILLED, 1", 36m, LH & RH INNER SECTION A, 500mm BROARDACRE,TRITECH S	1
4	GA4950495	BOOM POLY DRILLED, 1", 36m, LH & RH INNER SECTION B, 500mm BROARDACRE,TRITECH S	1
5	GA4950460	BOOM POLY DRILLED, 1", 36m, LH & RH OUTER SECTION A, 500mm BROARDACRE,TRITECH S	1
6	GA4950465	BOOM POLY DRILLED, 1", 36m, LH & RH OUTER SECTION B, 500mm BROARDACRE,TRITECH S	1
7	GA4950960	BOOM POLY DRILLED, 1", BREAKAWAY LH & RH, 1720mm, 500mm, BROARDACRE, TRITECH S	1
8	GA4950355	BOOM POLY DRILLED, 1", CENTRE SECTION LH, 500mm BROARDACRE, TRITECH S	1
9	GA4950360	BOOM POLY DRILLED, 1", CENTRE SECTION RH, 500mm BROARDACRE, TRITECH S	1
10	GA5077723	HOSE BARB, ELBOW, 90 DEGREE, 1" MALE X 1" HOSE, BANJO	9
11	GA5077655	STREET ELBOW, 90 DEGREE, 1 FEMALE THREAD X 1 FEMALE THREAD, BANJO, EL100-90	8
12	GA5078151	TEE, THREADED, 1" FEMALE, BANJO	1
	GA7800012	LAYOUT, BOOM SECTION PLUMBING, 16 SECTION, 36M, TRITECH RIVX, 500mm BROARDACRE	REV 01

GOLDACRES

Boom Plumbing 36m

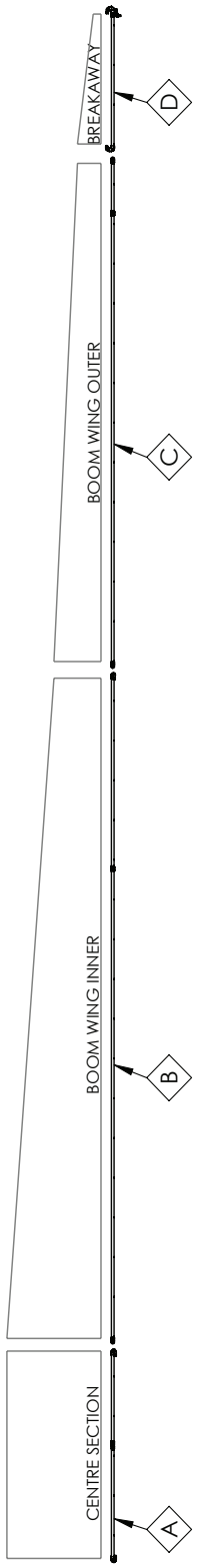

IF DESCRIPTION PREFIX IS ASSEMBLY DRAWING ONLY OR PRODUCTION DRAWING ONLY THE ITEM IS NOT FOR SALE

ITEM	PART NUMBER	DESCRIPTION	QTY
1	GA5077638	COUPLING, SOCKET, 1 FEMALE THREAD, BANJO, CPLG100	2
2	GA4950015	ASSEMBLY DRAWING ONLY, FENCE LINE JET ASSEMBLY, LH, 1", TRITECH S	1
3	GA4950500	BOOM POLY DRILLED, 1", 36m, LH & RH INNER SECTION A, 500mm ROWCROP, TRITECH S	1
4	GA4950505	BOOM POLY DRILLED, 1", 36m, LH & RH INNER SECTION B, 500mm ROWCROP,TRITECH S	1
5	GA4950470	BOOM POLY DRILLED, 1", 36m, LH & RH OUTER SECTION A, 500mm ROWCROP,TRITECH S	1
6	GA4950475	BOOM POLY DRILLED, 1", 36m, LH & RH OUTER SECTION B, 500mm ROWCROP,TRITECH S	1
7	GA4950965	BOOM POLY DRILLED, 1", BREAKAWAY LH & RH, 1720mm, 500mm, ROWCROP, TRITECH S	1
8	GA4950365	BOOM POLY DRILLED, 1", CENTRE SECTION LH, 500mm ROWCROP, TRITECH S	1
9	GA4950370	BOOM POLY DRILLED, 1", CENTRE SECTION RH, 500mm ROWCROP, TRITECH S	1
10	GA5077723	HOSE BARB, ELBOW, 90 DEGREE, 1" MALE X 1" HOSE, BANJO	9
11	GA5077655	STREET ELBOW, 90 DEGREE, 1 FEMALE THREAD X 1 FEMALE THREAD, BANJO, EL100-90	8
12	GA5078151	TEE, THREADED, 1" FEMALE, BANJO	1
GA7800013	GOLDACRES	LAYOUT, BOOM SECTION PLUMBING, 16 SECTION, 36M, TRITECH RIVX, 500mm ROWCROP	REV 01

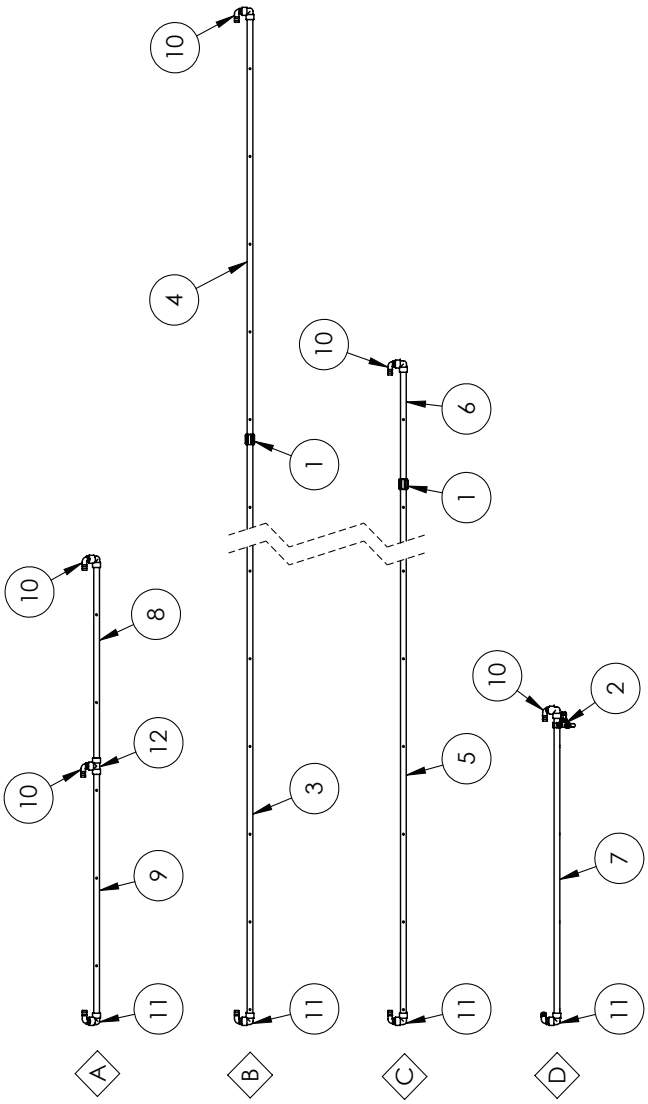

36MT, TRITECH RIVX, 500mm, ROWCROP, 16 SECTION

Boom Plumbing 36m

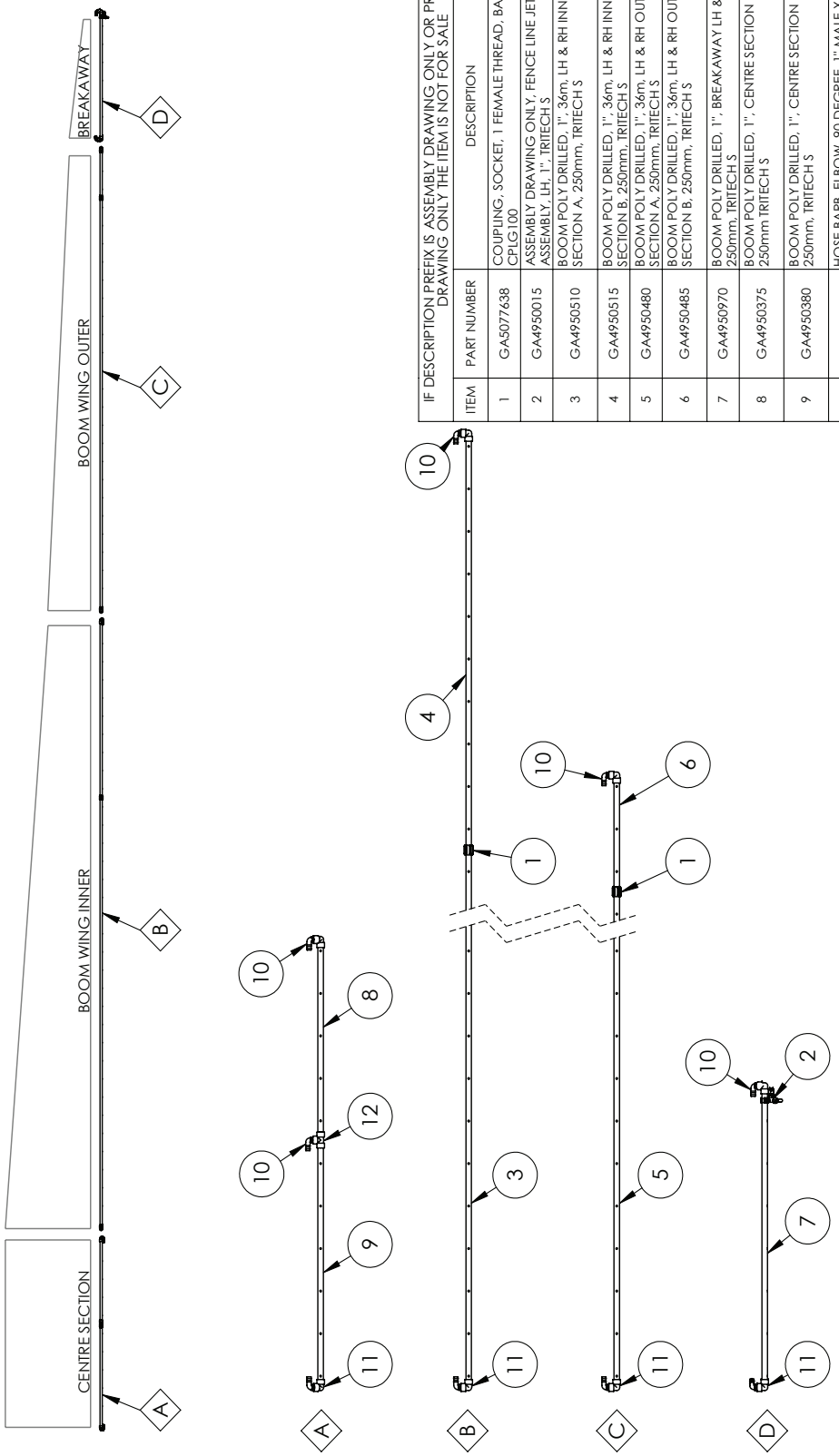

IF DESCRIPTION PREFIX IS ASSEMBLY DRAWING ONLY OR PRODUCTION DRAWING ONLY THE ITEM IS NOT FOR SALE

ITEM	PART NUMBER	DESCRIPTION	QTY
1	GA5077638	COUPLING, SOCKET, 1 FEMALE THREAD, BANJO, CPLG100	2
2	GA4950015	ASSEMBLY DRAWING ONLY, FENCE LINE JET ASSEMBLY, LH, 1", TRITECH S	1
3	GA4950510	BOOM POLY DRILLED, 1", 36m, LH & RH INNER SECTION A, 250mm, TRITECH S	1
4	GA4950515	BOOM POLY DRILLED, 1", 36m, LH & RH INNER SECTION B, 250mm, TRITECH S	1
5	GA4950480	BOOM POLY DRILLED, 1", 36m, LH & RH OUTER SECTION A, 250mm, TRITECH S	1
6	GA4950485	BOOM POLY DRILLED, 1", 36m, LH & RH OUTER SECTION B, 250mm, TRITECH S	1
7	GA4950970	BOOM POLY DRILLED, 1", BREAKAWAY LH & RH, 250mm, TRITECH S	1
8	GA4950375	BOOM POLY DRILLED, 1", CENTRE SECTION LH, 250mm TRITECH S	1
9	GA4950380	BOOM POLY DRILLED, 1", CENTRE SECTION RH, 250mm, TRITECH S	1
10	GA5077723	HOSE BARB, ELBOW, 90 DEGREE, 1" MALE X 1" HOSE, BANJO	9
11	GA5077655	STREET ELBOW, 90 DEGREE, 1 FEMALE THREAD X 1 FEMALE THREAD, BANJO, EL100-90	8
12	GA5078151	TEE, THREADED, 1" FEMALE, BANJO	1
	GA7800014	LAYOUT, BOOM SECTION PLUMBING, 16 SECTION, 36M, TRITECH RIVX, 250mm	REV 01

GOLDACRES

Boom Plumbing 42m

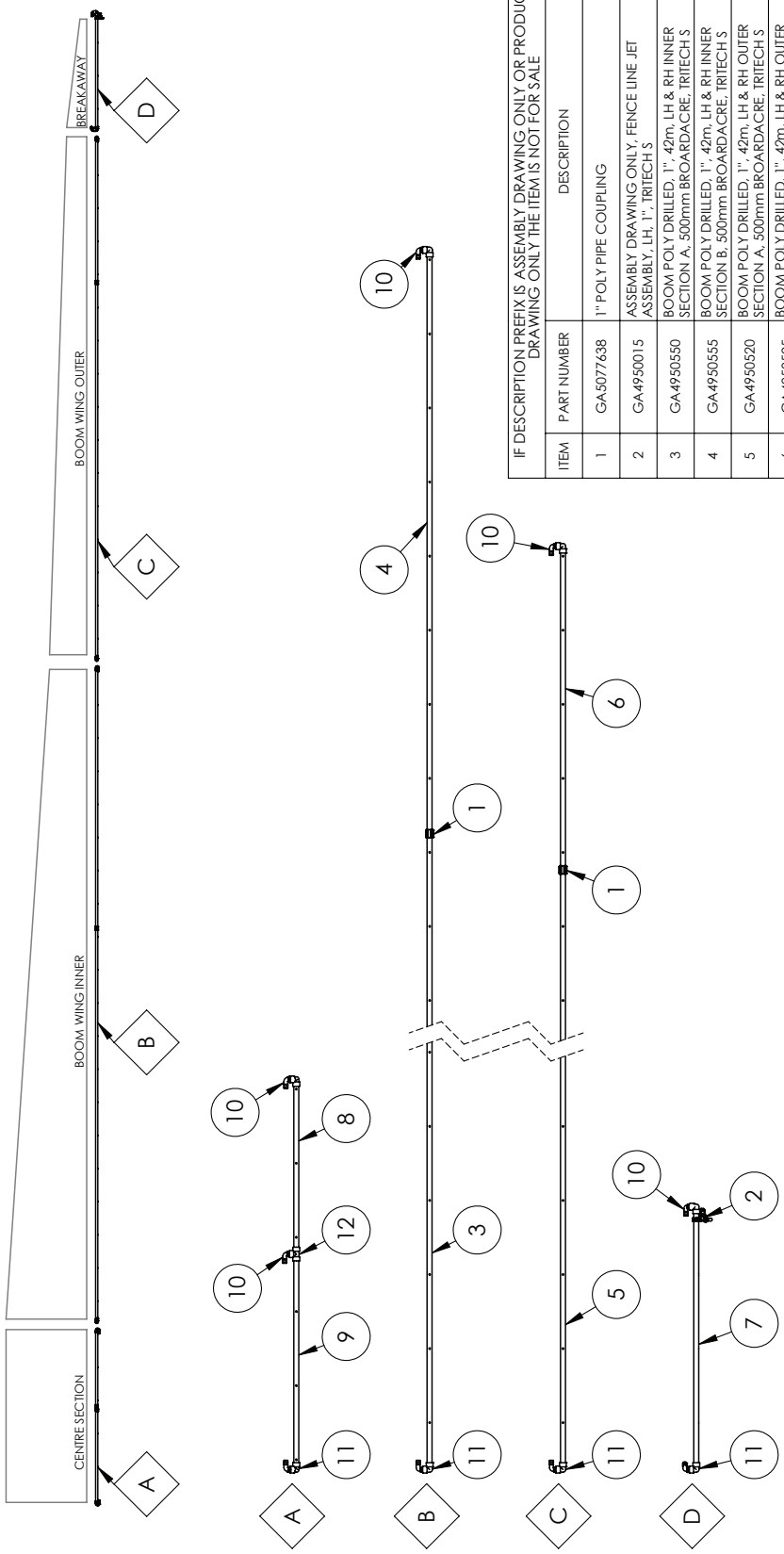

IF DESCRIPTION PREFIX IS ASSEMBLY DRAWING ONLY OR PRODUCTION DRAWING ONLY THE ITEM IS NOT FOR SALE

ITEM	PART NUMBER	DESCRIPTION	QTY
1	GA5077638	1" POLY PIPE COUPLING	2
2	GA4950015	ASSEMBLY DRAWING ONLY, FENCE LINE JET ASSEMBLY, LH, 1", TRITECH S	1
3	GA4950550	BOOM POLY DRILLED, 1", 42m, LH & RH INNER SECTION A, 500mm BROARDACRE, TRITECH S	1
4	GA4950555	BOOM POLY DRILLED, 1", 42m, LH & RH INNER SECTION B, 500mm BROARDACRE, TRITECH S	1
5	GA4950520	BOOM POLY DRILLED, 1", 42m, LH & RH OUTER SECTION A, 500mm BROARDACRE, TRITECH S	1
6	GA4950525	BOOM POLY DRILLED, 1", 42m, LH & RH OUTER SECTION B, 500mm BROARDACRE, TRITECH S	1
7	GA4950960	BOOM POLY DRILLED, 1", BREAKAWAY LH & RH, 1720mm, 500mm, BROARDACRE, TRITECH S	1
8	GA4950355	BOOM POLY DRILLED, 1", CENTRE SECTION LH, 500mm BROARDACRE, TRITECH S	1
9	GA4950360	BOOM POLY DRILLED, 1", CENTRE SECTION RH, 500mm BROARDACRE, TRITECH S	1
10	GA5077723	HOSE BARB, ELBOW, 90 DEGREE, 1" MALE X 1" HOSE, BANJO	9
11	GA5077655	STREET ELBOW, 90 DEGREE, 1 FEMALE THREAD X 1 FEMALE THREAD, BANJO, EL100-90	8
12	GA5078151	TEE, THREADED, 1" FEMALE, BANJO	1
GA7800015	GOLDACRES	LAYOUT, BOOM SECTION PLUMBING, 16 SECTION, 42M, TRITECH RIVX, 500mm BROARDACRE	REV 01

42MT, TRITECH RIVX, 500mm, 16 SECTION, BROADACRE

Boom Plumbing 42m

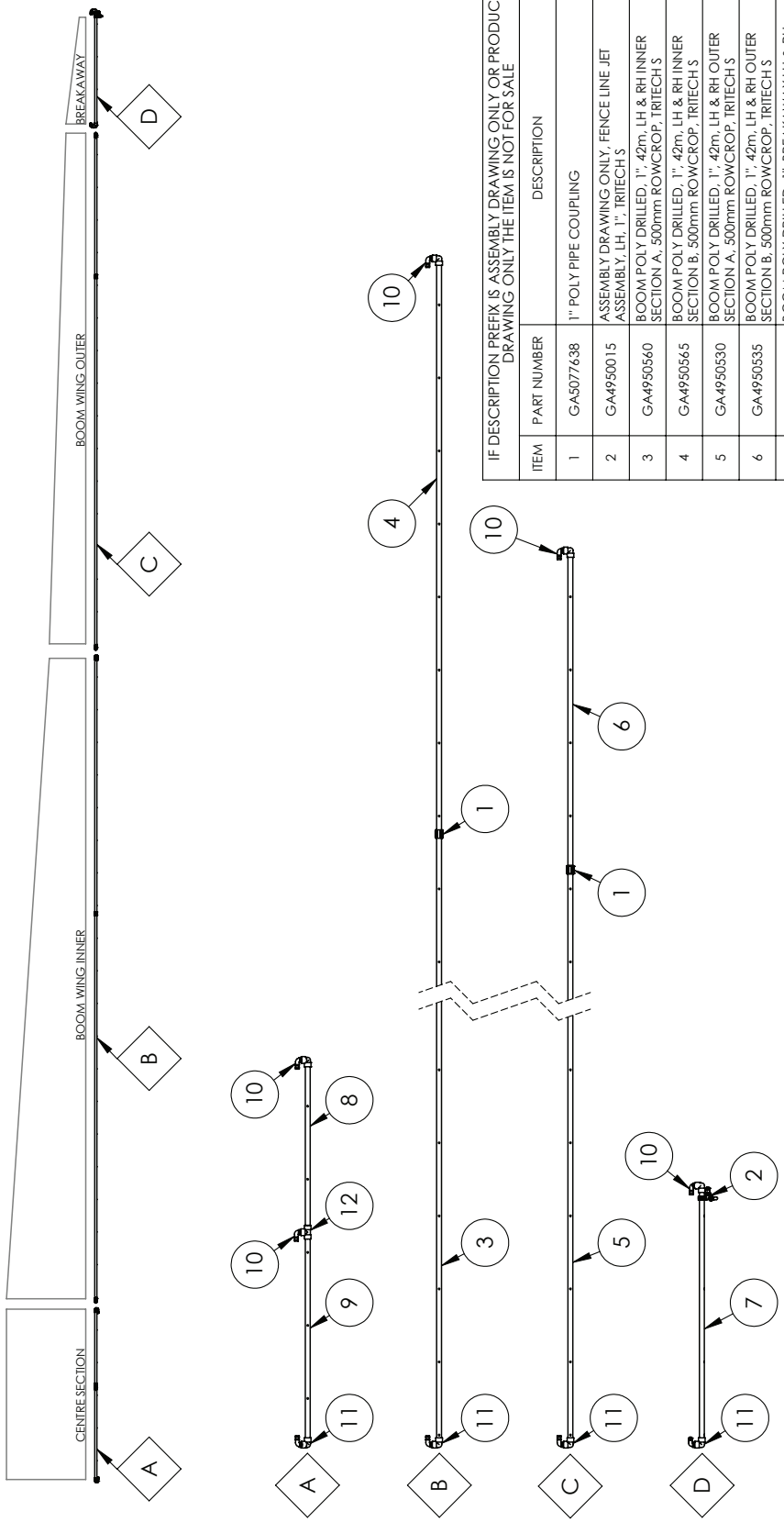

IF DESCRIPTION PREFIX IS ASSEMBLY DRAWING ONLY OR PRODUCTION DRAWING ONLY THE ITEM IS NOT FOR SALE

ITEM	PART NUMBER	DESCRIPTION	QTY
1	GA5077638	1" POLY PIPE COUPLING	2
2	GA4950015	ASSEMBLY DRAWING ONLY, FENCE LINE JET ASSEMBLY, LH, 1", TRITECH S	1
3	GA4950560	BOOM POLY DRILLED, 1", 42m, LH & RH INNER SECTION A, 500mm ROWCROP, TRITECH S	1
4	GA4950565	BOOM POLY DRILLED, 1", 42m, LH & RH INNER SECTION B, 500mm ROWCROP, TRITECH S	1
5	GA4950530	BOOM POLY DRILLED, 1", 42m, LH & RH OUTER SECTION A, 500mm ROWCROP, TRITECH S	1
6	GA4950535	BOOM POLY DRILLED, 1", 42m, LH & RH OUTER SECTION B, 500mm ROWCROP, TRITECH S	1
7	GA4950965	BOOM POLY DRILLED, 1", BREAKAWAY LH & RH, 1720mm, 500mm, ROWCROP, TRITECH S	1
8	GA4950365	BOOM POLY DRILLED, 1", CENTRE SECTION LH, 500mm ROWCROP, TRITECH S	1
9	GA4950370	BOOM POLY DRILLED, 1", CENTRE SECTION RH, 500mm ROWCROP, TRITECH S	1
10	GA5077723	HOSE BARB, ELBOW, 90 DEGREE, 1" MALE X 1" HOSE, BANJO	9
11	GA5077655	STREET ELBOW, 90 DEGREE, 1 FEMALE THREAD X 1 FEMALE THREAD, BANJO, EL100-90	8
12	GA5078151	TEE, THREADED, 1" FEMALE, BANJO	1
	GA7800016	LAYOUT, BOOM SECTION PLUMBING, 16 SECTION, 42M, TRITECH RIVX, 500mm ROWCROP	REV 01

GOLDACRES

42MT, TRITECH RIVX, 500mm, 16 SECTION, ROW CROP

Boom Plumbing 42m

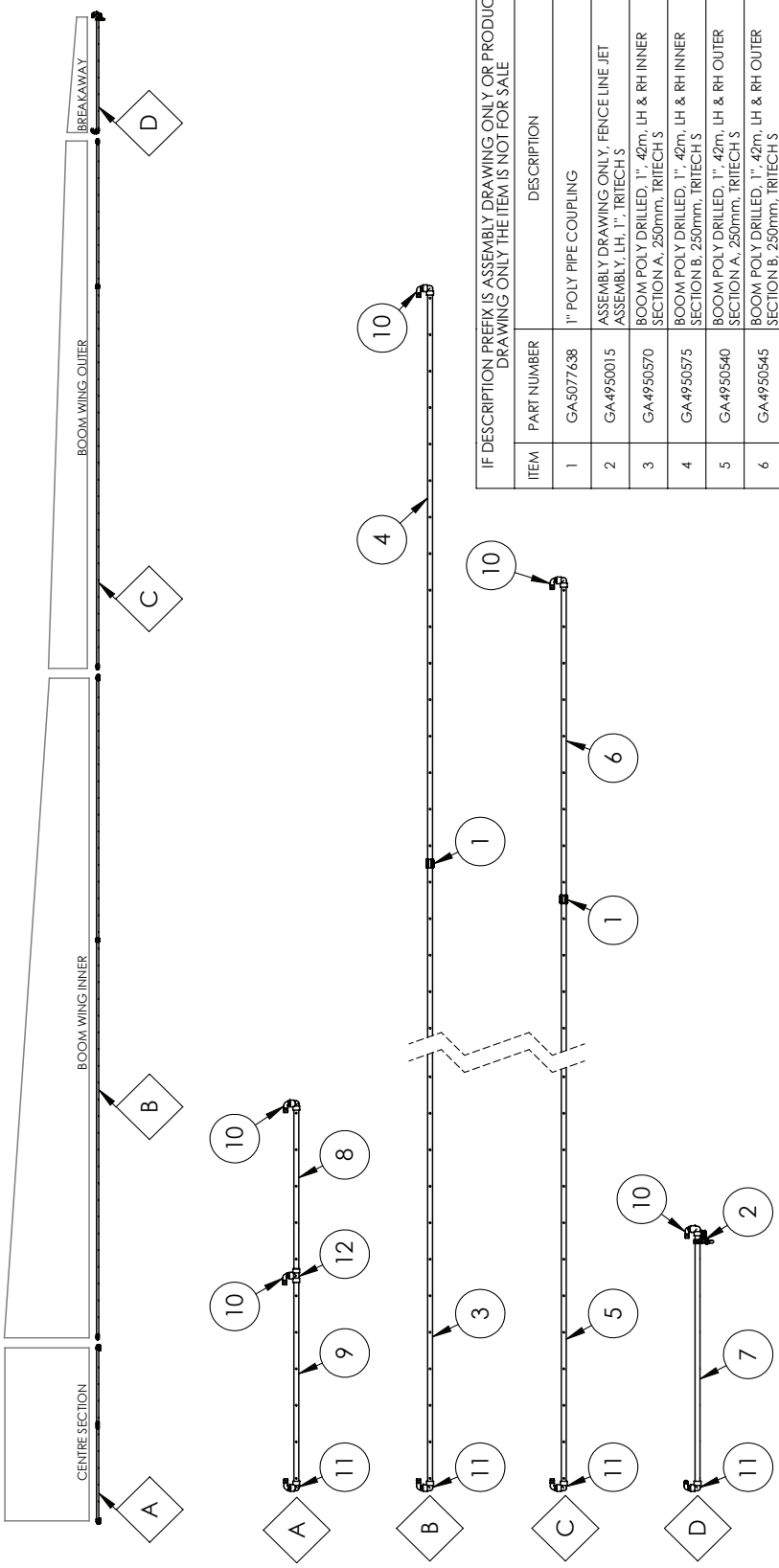

IF DESCRIPTION PREFIX IS ASSEMBLY DRAWING ONLY OR PRODUCTION DRAWING ONLY THE ITEM IS NOT FOR SALE

ITEM	PART NUMBER	DESCRIPTION	QTY
1	GA5077638	1" POLY PIPE COUPLING	2
2	GA4950015	ASSEMBLY DRAWING ONLY, FENCE LINE JET ASSEMBLY, LH, 1", TRITECH S	1
3	GA4950570	BOOM POLY DRILLED, 1", 42m, LH & RH INNER SECTION A, 250mm, TRITECH S	1
4	GA4950575	BOOM POLY DRILLED, 1", 42m, LH & RH INNER SECTION B, 250mm, TRITECH S	1
5	GA4950540	BOOM POLY DRILLED, 1", 42m, LH & RH OUTER SECTION A, 250mm, TRITECH S	1
6	GA4950545	BOOM POLY DRILLED, 1", 42m, LH & RH OUTER SECTION B, 250mm, TRITECH S	1
7	GA4950970	BOOM POLY DRILLED, 1", BREAKAWAY LH & RH, 250mm, TRITECH S	1
8	GA4950375	BOOM POLY DRILLED, 1", CENTRE SECTION LH, 250mm TRITECH S	1
9	GA4950380	BOOM POLY DRILLED, 1", CENTRE SECTION RH, 250mm, TRITECH S	1
10	GA5077723	HOSE BARB, ELBOW, 90 DEGREE, 1" MALE X 1" HOSE, BANJO	9
11	GA5077655	STREET ELBOW, 90 DEGREE, 1 FEMALE THREAD X 1 FEMALE THREAD, BANJO, EL100-90	8
12	GA5078151	TEE, THREADED, 1" FEMALE, BANJO	1
GA7800017	GOLDACRES	LAYOUT, BOOM SECTION PLUMBING, 16 SECTION, 42M, TRITECH RIVX, 250mm	REV 01

42MT, TRITECH RIVX, 250mm, 16 SECTION

Boom Plumbing 48m

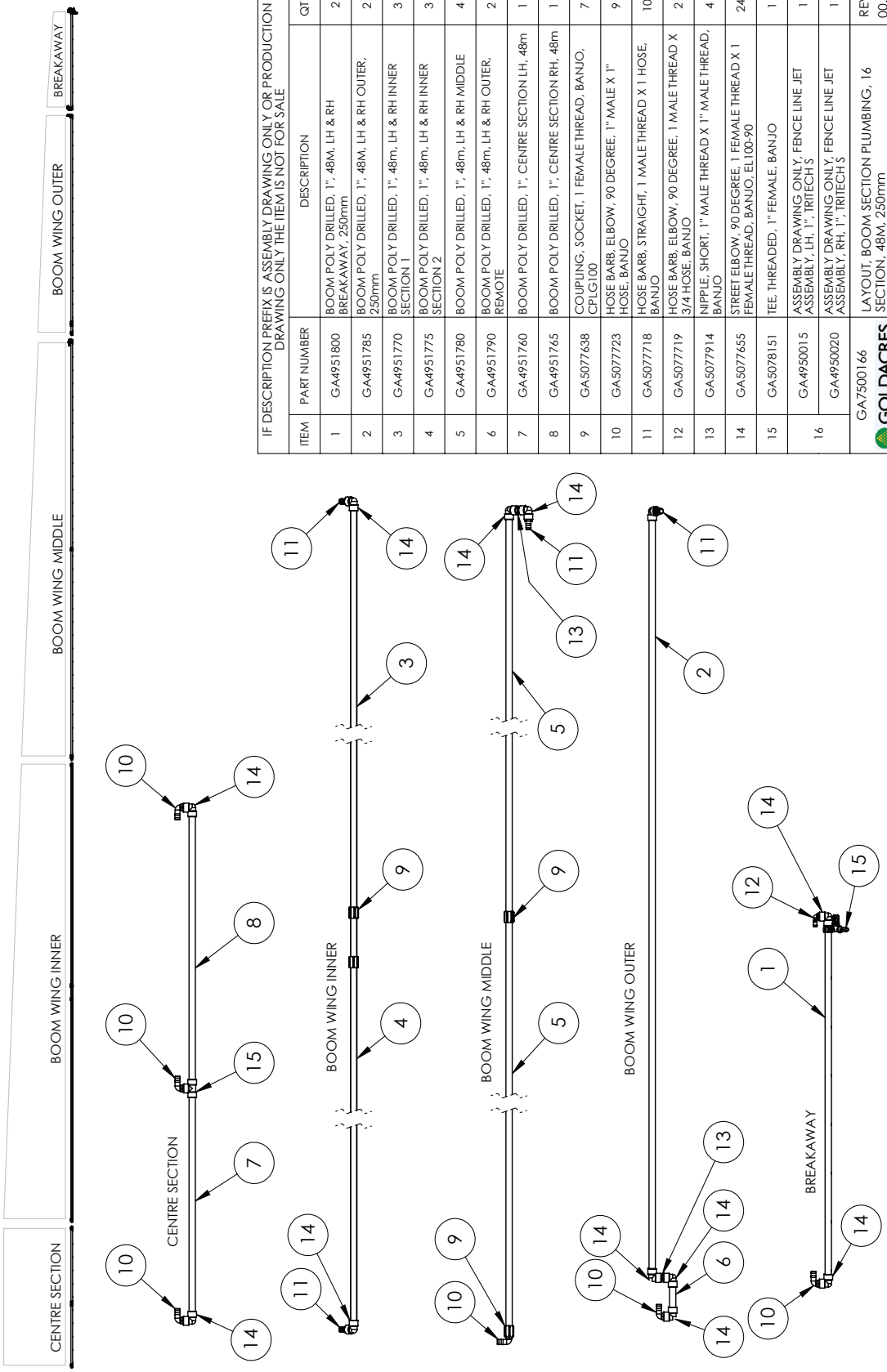

IF DESCRIPTION PREFIX IS ASSEMBLY DRAWING ONLY OR PRODUCTION DRAWING ONLY THE ITEM IS NOT FOR SALE

ITEM	PART NUMBER	DESCRIPTION	QTY
1	GA4951800	BOOM POLY DRILLED, 1", 48M, LH & RH BREAKAWAY, 250mm	2
2	GA4951785	BOOM POLY DRILLED, 1", 48M, LH & RH OUTER, 250mm	2
3	GA4951770	BOOM POLY DRILLED, 1", 48m, LH & RH INNER SECTION 1	3
4	GA4951775	BOOM POLY DRILLED, 1", 48m, LH & RH INNER SECTION 2	3
5	GA4951780	BOOM POLY DRILLED, 1", 48m, LH & RH MIDDLE	4
6	GA4951790	BOOM POLY DRILLED, 1", 48m, LH & RH OUTER, REMOTE	2
7	GA4951760	BOOM POLY DRILLED, 1", CENTRE SECTION LH, 48m	1
8	GA4951765	BOOM POLY DRILLED, 1", CENTRE SECTION RH, 48m	1
9	GA5077638	COUPLING, SOCKET, 1 FEMALE THREAD, BANJO, CPLG100	7
10	GA5077723	HOSE BARB, ELBOW, 90 DEGREE, 1" MALE X 1" HOSE, BANJO	9
11	GA5077718	HOSE BARB, STRAIGHT, 1 MALE THREAD X 1 HOSE, BANJO	10
12	GA5077719	HOSE BARB, ELBOW, 90 DEGREE, 1 MALE THREAD X 3/4 HOSE, BANJO	2
13	GA5077914	NIPPLE, SHORT, 1" MALE THREAD X 1" MALE THREAD, BANJO	4
14	GA5077655	STREET ELBOW, 90 DEGREE, 1 FEMALE THREAD X 1 FEMALE THREAD, BANJO, EL100-90	24
15	GA5078151	TEE, THREADED, 1" FEMALE, BANJO	1
16	GA4950015	ASSEMBLY DRAWING ONLY, FENCE LINE JET ASSEMBLY, LH, 1", TRITECH S	1
	GA4950020	ASSEMBLY DRAWING ONLY, FENCE LINE JET ASSEMBLY, RH, 1", TRITECH S	1
	GA7500166	LAYOUT, BOOM SECTION PLUMBING, 16 SECTION, 48M, 250mm	REV 00.B

GOLDACRES

Boom Poly - Clamps 36-42m

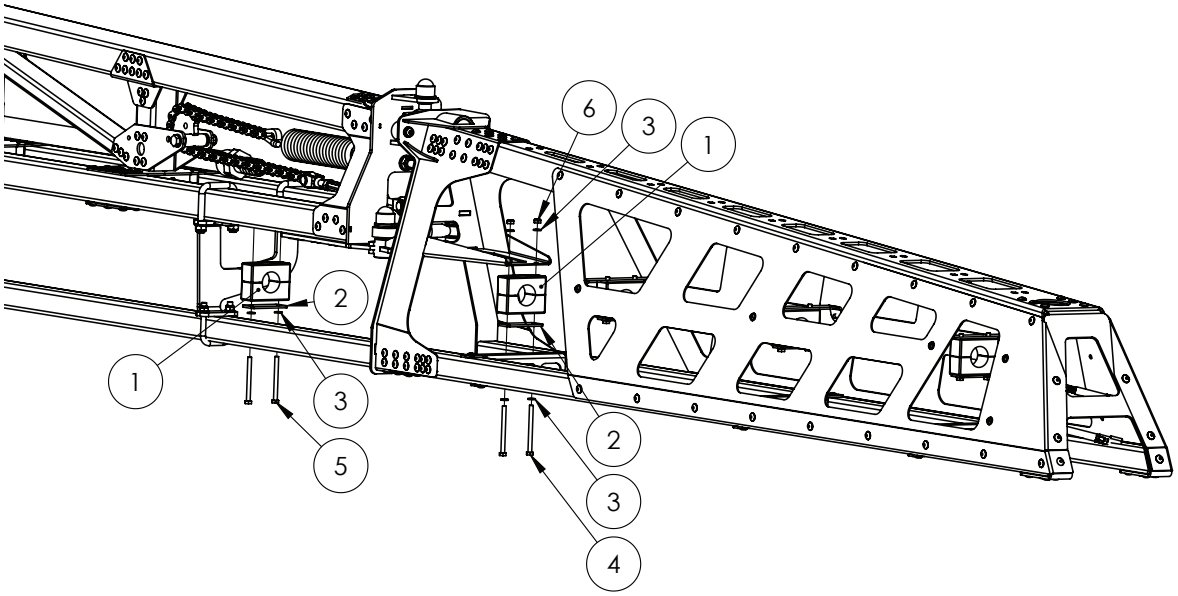

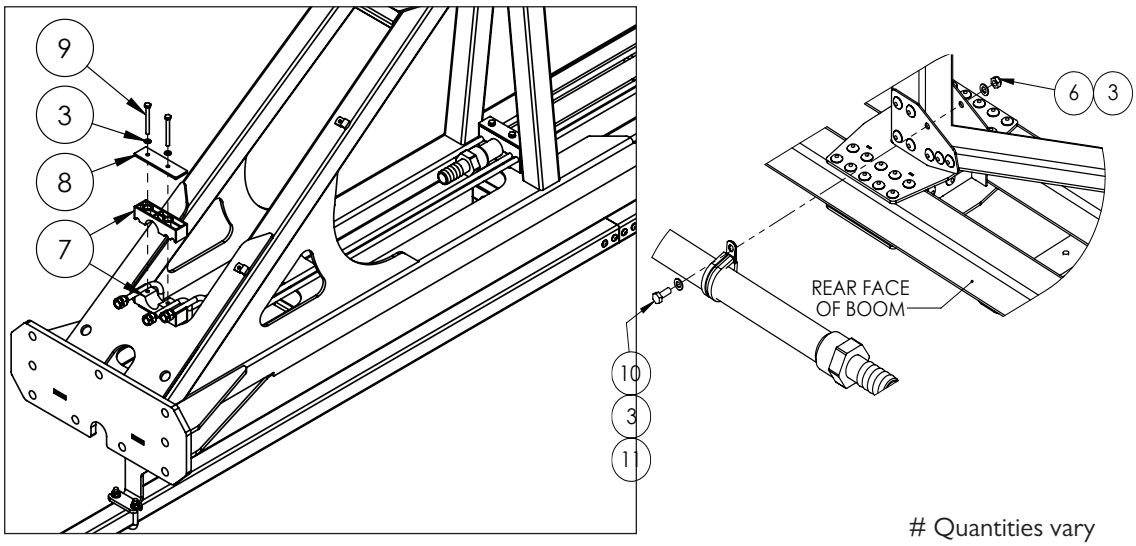

Quantities vary

ITEM NO.	PART NUMBER	DESCRIPTION	QTY.
1	GA3500699	MOUNTING CLAMP, SINGLE TYPE, JAW, PAIR, GROUP 5, 33.7MM	#
2	GA5078075	MOUNTING CLAMP, SINGLE TYPE, PLATE, TOP, GROUP 5	#
3	GA5004437	WASHER 6MM FLAT SS	#
4	GA5011437	BOLT M6 X 75 GR8.8 ZP	#
5	GA5004105	BOLT M6 X 70 SS A2-70	#
6	GA5048115	NUT M6 NYLOC ZP	#
7	GA3500707	MOUNTING CLAMP, JAW, SINGLE, GROUP 5, 33.7MM CENTRE WITH 3 X 10MM	#
8	GA4406140	PLATE, BOOM PLUMBING AND HYDRAULIC LINE CLAMP, TOP PLATE	#
9	GA0500085	BOLT M6 X 60 SS	#
10	GA5011395	BOLT M6 X 16 SS A2-70	#
11	GA5048090	CLAMP, P TYPE, 35MM 56487	#

Breakaway Poly Clamps 36-42m

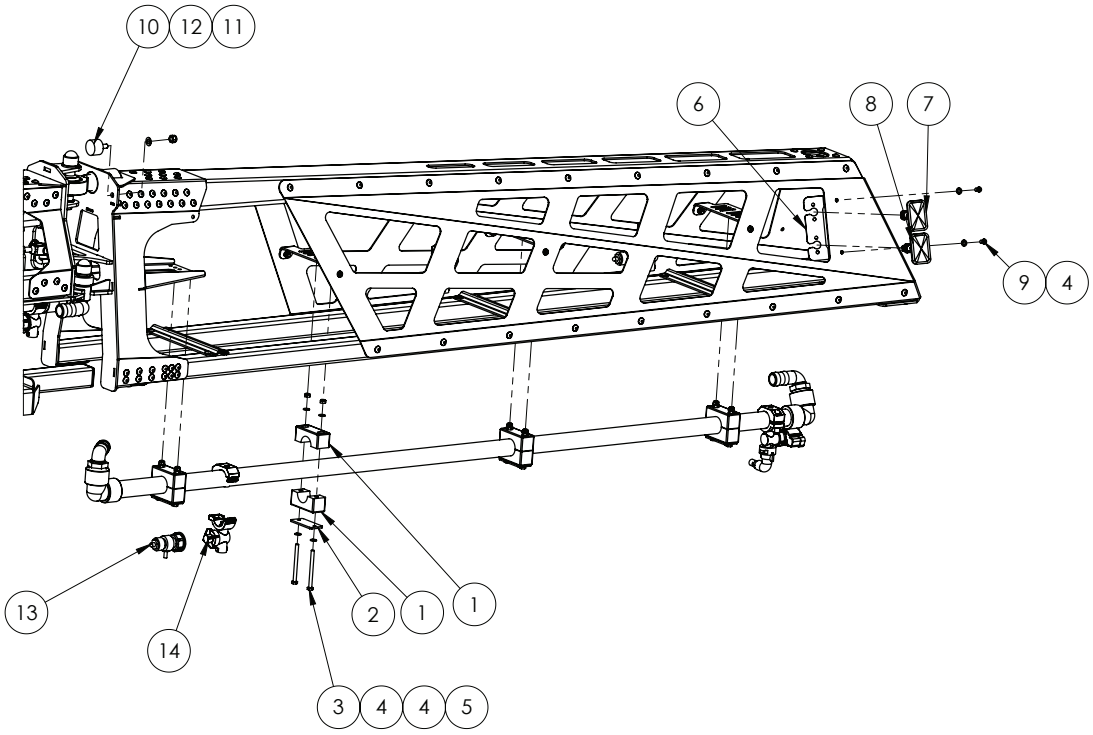

ITEM NO.	PART NUMBER	DESCRIPTION	QTY.
1	GA3500699	MOUNTING CLAMP, SINGLE TYPE, JAW, PAIR, GROUP 5, 33.7mm, RCS-33.5J	4
2	GA5078075	MOUNTING CLAMP, SINGLE TYPE, PLATE, TOP, GROUP 5, RCS-5PT	4
3	GA0500115	BOLT M6 X 75 SS A2-70	8
4	GA5004437	WASHER 6mm FLAT SS	18
5	GA5004429	NUT M6 NYLOC SS	8
6	GA4405610	PLATE, ALUMINIUM BREAKAWAY TIP, LED MOUNT, MY20	1
7	GA3000267	LIGHT, LED, ORANGE, CLEARANCE, DEUTSCH CONNECTOR	1
8	GA3000266	LIGHT, LED, RED, FENCE, DEUTSCH CONNECTOR	1
9	GA5004023	BHCS M6 X 10 SS A2-70	2
10	GA5014613	RUBBER BUFFER DIA 30 HT 20	2
11	GA5052590	NUT M8 NYLOC SS	2
12	GA5003651	WASHER M8 FLAT SS	2
13	GA5065520	SPRAY STOP, RAPIDFIRE, SUIT TEEJET NOZZLE BODY, ALTEK	3
14	GA5077962	NOZZLE BODY, SINGLE, 1”, TEEJET, QJ17560A-1-NYB	3

Boom Poly - Clamps 48m

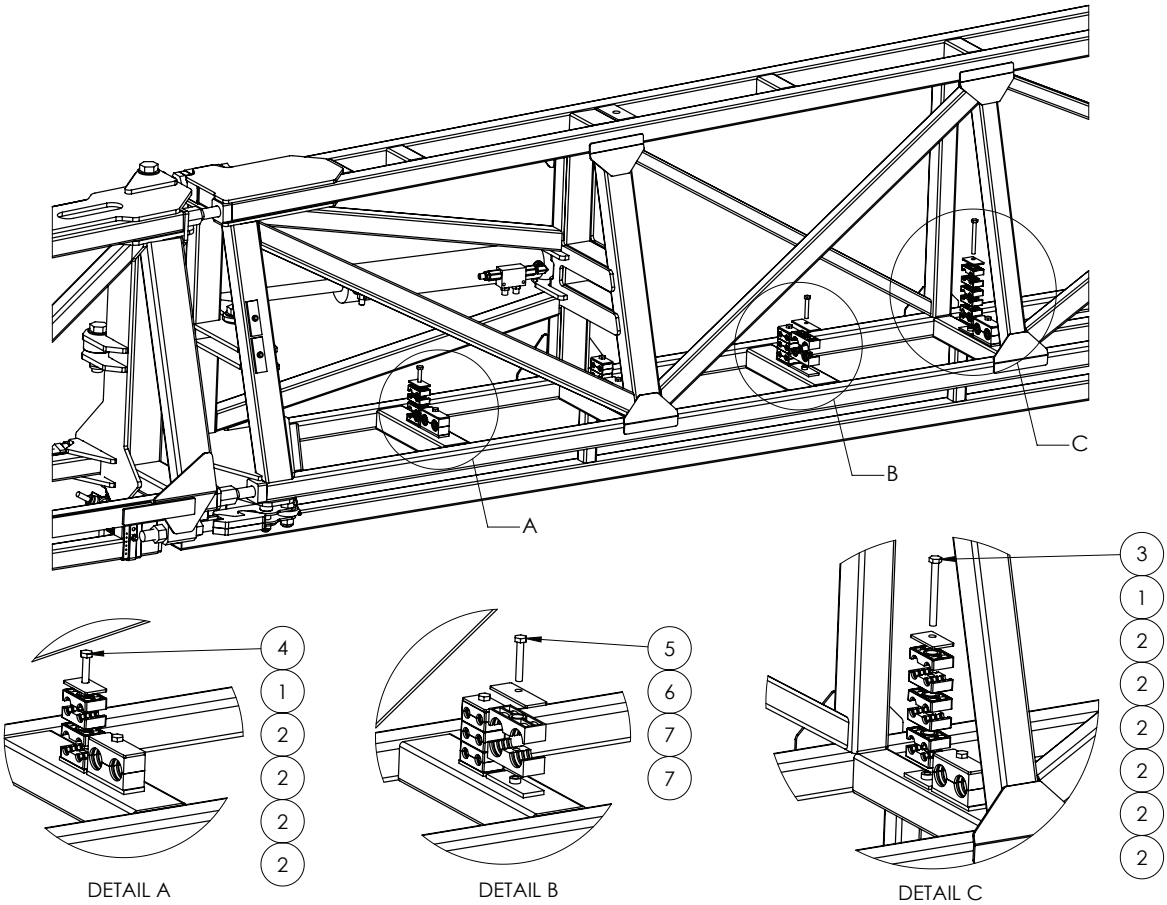

Quantities vary

ITEM NO.	PART NUMBER	DESCRIPTION	QTY.
1	GA5078042	DOUBLE CLAMP PLATE TOP GR2	#
2	GA5078031	DOUBLE CLAMP JAWS PP GR 2 14MM	#
3	GA5004749	BOLT M8 X 80 GR8.8 ZP	#
4	GA5011489	BOLT M8 X 60 GR8.8 ZP	#
5	GA5004727	BOLT M8 X 50 GR8.8 ZP	#
6	GA5078049	MOUNTING CLAMP, DOUBLE TYPE, PLATE, TOP, GROUP 4	#
7	GA5078038	MOUNTING CLAMP, DOUBLE TYPE, JAW, PAIR, GROUP 4, 28MM	#

Hoses

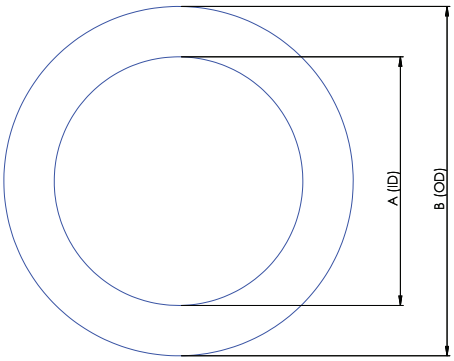

SUCTION HOSE

PART NUMBER	DESCRIPTION	INTERNAL DIAMETER (A)	OUTSIDE DIAMETER (B)
GA2000218	20MM SUCTION HOSE	20MM	32MM
GA2000222	25MM SUCTION HOSE	25MM	35MM
GA2000224	32MM SUCTION HOSE	32MM	45MM
GA2000226	38MM SUCTION HOSE	38MM	48MM
GA2000229	51MM SUCTION HOSE	51MM	63MM
GA2000230	63MM SUCTION HOSE	63MM	76MM
GA2000232	75MM SUCTION HOSE	75MM	93MM

NOTE: Suction hose can be identified by its external green stripe and wire reinforcement.

PRESSURE HOSE

PART NUMBER	DESCRIPTION	INTERNAL DIAMETER (A)	OUTSIDE DIAMETER (B)
GA2000200	7MM PRESSURE HOSE	7MM	12.5MM
GA2000211	13MM PRESSURE HOSE	13MM	20MM
GA2000216	20MM PRESSURE HOSE	20MM	28MM
GA2000219	25MM PRESSURE HOSE	25MM	34MM
GA2000223	32MM PRESSURE HOSE	32MM	43MM
GA2000225	38MM PRESSURE HOSE	38MM	48MM

NOTE: Pressure hose can be identified by its blue internal layer.

PVC HOSE

PART NUMBER	DESCRIPTION	INTERNAL DIAMETER (A)	OUTSIDE DIAMETER (B)
GA2000220	25MM PVC HOSE	25MM	32MM
GA2000227	40MM PVC HOSE	40MM	50MM
GA2000228	50MM PVC HOSE	50MM	58MM

NOTE: PVC Hose can be identified by its ribbed outer surface.

SIGHT TUBE HOSE

PART NUMBER	DESCRIPTION	INTERNAL DIAMETER (A)	OUTSIDE DIAMETER (B)
GA2000209	12MM CLEAR SIGHT TUBE HOSE	12MM	-
GA2000210	12MM CLEAR SIGHT TUBE HOSE WITH WIRE	12MM	-

LAY FLAT HOSE

PART NUMBER	DESCRIPTION	INTERNAL DIAMETER (A)	OUTSIDE DIAMETER (B)
GA2000220	25MM PVC HOSE	25MM	32MM

Hose Clamps

PART NUMBER	DESCRIPTION
GA5004865	8-16MM HOSE CLAMP
GA5000469	12-20MM HOSE CLAMP
GA5000999	16-25MM HOSE CLAMP
GA5001681	20-32MM HOSE CLAMP
GA5016813	25-40MM HOSE CLAMP
GA5002783	30-45MM HOSE CLAMP
GA5002873	32-50MM HOSE CLAMP
GA5003325	40-60MM HOSE CLAMP
GA5016815	50-70MM HOSE CLAMP
GA5004241	60-80MM HOSE CLAMP

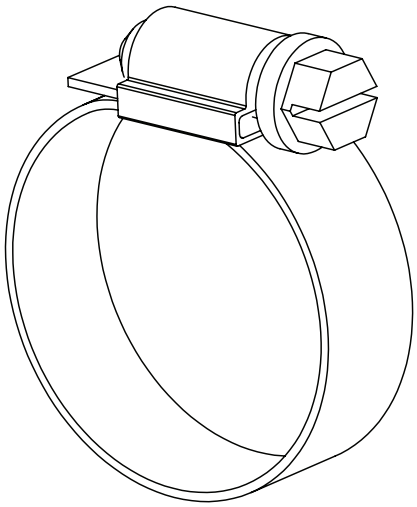

Cable Ties

PART NUMBER	DESCRIPTION
GA5002173	CABLE TIE, BLACK, 100 X 2.5MM
GA5003517	CABLE TIE, BLACK, 140 X 3.5MM
GA5004455	CABLE TIE, BLACK, 190 X 4.5MM
GA5000685	CABLE TIE, BLACK, 320 X 7.5MM
GA5000687	CABLE TIE, BLACK, 360 X 4.5MM
GA5021235	CABLE TIE, BLACK, 540 X 7.5MM

Spiral Guard

PART NUMBER	DESCRIPTION
GA5015669	SPIRAL GUARD, BLACK

Chemical Probe Hose Lance

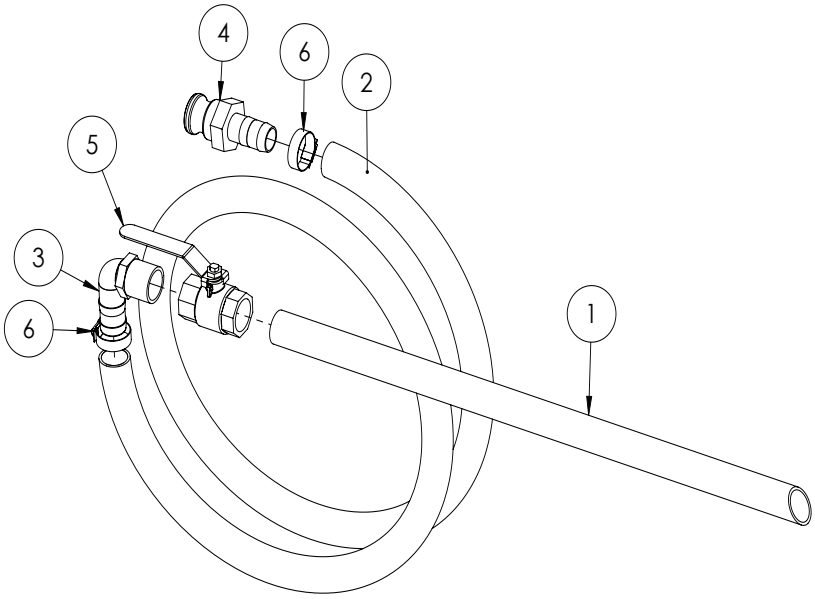

ITEM NO.	PART NUMBER	DESCRIPTION	QTY.
-	GA4948250	CHEMICAL SUCTION PROBE, ASSEMBLED	-
1	GA5013603	POLY PIPE 25 (CUT 630MM LONG)	1
2	GA2000220	HOSE, SUCTION, PVC, 25MM, BLACK - CUT 3200 MM LONG	1
3	GA5077723	HOSE BARB, ELBOW, 90 DEGREE, 1" MALE X 1" HOSE, BANJO	1
4	GA5076011	CAM LEVER, 1" MALE COUPLING X 1" HOSE BARB, BANJO	1
5	GA5018319	VALVE, BALL, 25MM FEMALE THREAD INLET / OUTLET, LEVER HANDLE, SS	1
6	GA5001681	HOSE CLAMP, 1" SS (20-32/12W)	2

Enviro Coupling & Hose

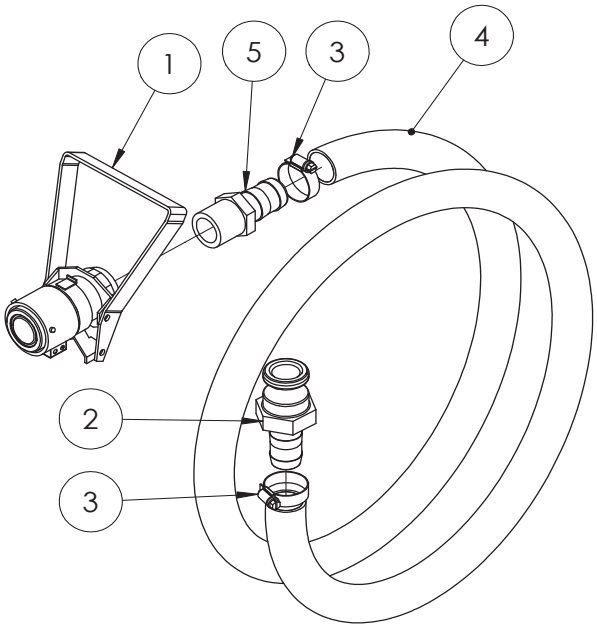

ITEM NO.	PART NUMBER	DESCRIPTION	QTY.
-	GA5020600	ENVIRO DRUM / MICROMATIC COUPLING WITH SUCTION HOSE	-
1	GA5018803	MICROMATIC DRUM VALVE COUPLING, 3 PIN, VITON SEALS	1
	GA5018799	SEAL KIT, SUIT MICROMATIC / ENVIRO DRUM COUPLING GA5018803	-
2	GA5076011	CAM LEVER, 1" MALE COUPLING X 1" HOSE BARB, BANJO	1
3	GA5001681	HOSE CLAMP, 1" SS (20-32/12W)	2
4	GA2000220	HOSE, SUCTION, PVC, 25MM, BLACK - CUT 2840MM LONG	1
5	GA5077718	HOSE BARB, STRAIGHT, 1" MALE THREAD X 1" HOSE	1

Chapter 20

ENGINE & TRANSMISSION

Air-conditioning Compressor

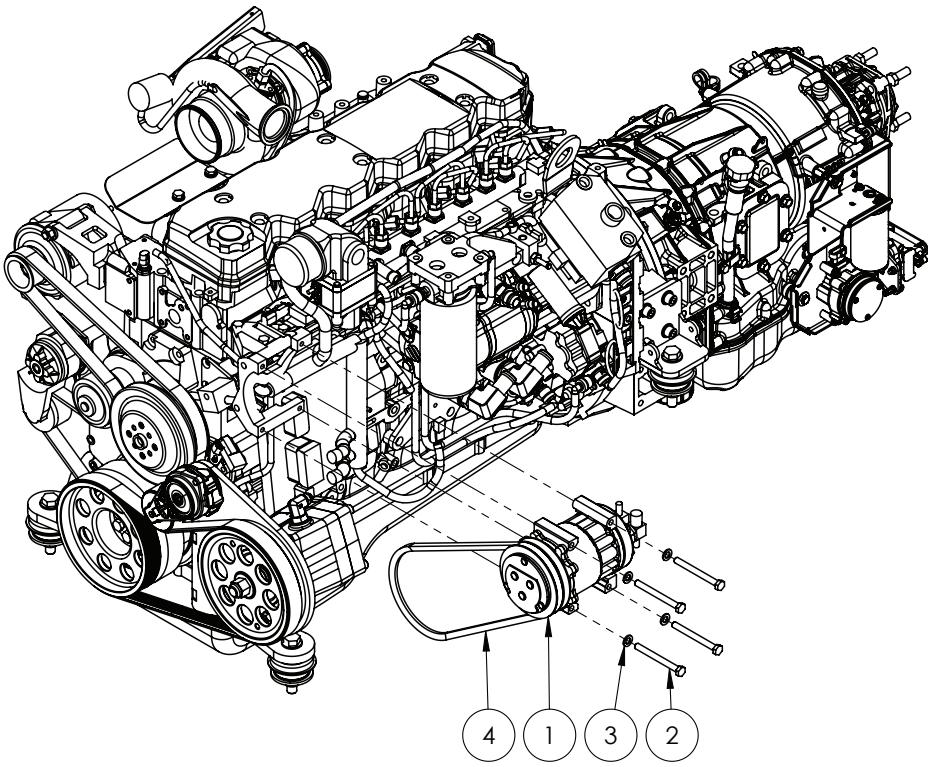

ITEM NO.	PART NUMBER	DESCRIPTION	QTY.
1	GA5071641	AIR CONDITIONER COMPRESSOR, PAD MOUNT	1
2	GA5006091	BOLT M10 X 100 GR8.8 ZP	4
3	GA5000117	WASHER 10MM FLAT SS HD	20
4	GA5071435	V BELT, AIR CONDITIONER, 13A1080	1

Air-conditioning Compressor & Alternator (Bilberry)

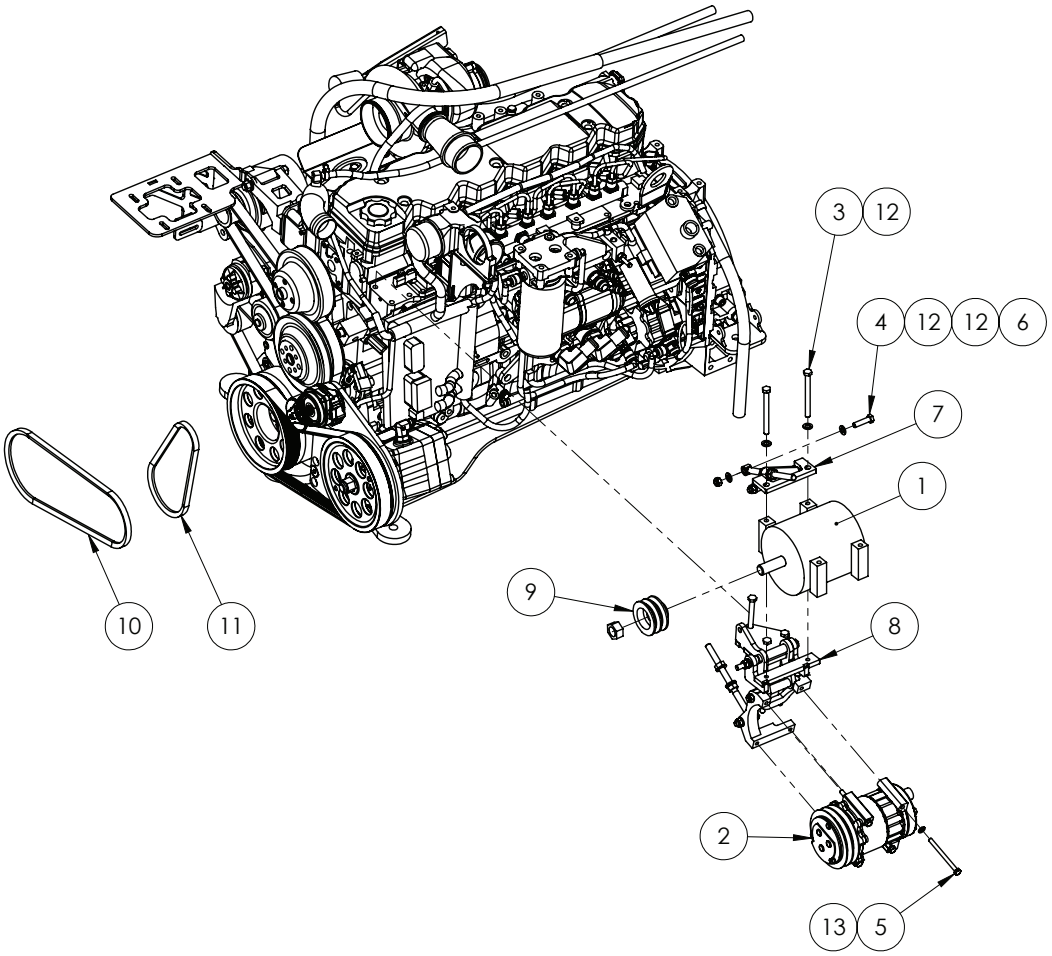

ITEM NO.	PART NUMBER	DESCRIPTION	QTY.
1	GA3000915	8600423 ALTERNATOR DELCO 24V 110AMP 28SI PAD	1
2	GA5071641	AIR CONDITIONER COMPRESSOR, PAD MOUNT, G6 G8	1
3	GA5011141	BOLT M10 X 110 GR8.8 ZP	6
4	GA5006071	BOLT M10 X 40 GR10.9 ZP	1
5	GA5004681	BOLT M8 X 100 GR8.8 ZP	4
6	GA5000141	NUT M10 NYLOC ZP	1
7	GA4952235	PRODUCTION DRAWING ONLY, BELT TENSION BRACKET, BILBERRY ALTERNATOR 24V G6 MY22	1
8	GA4952185	PRODUCTION DRAWING ONLY, BRACKET, BILBERRY ALTERNATOR BRACKET, 24V, G6 MY22	1
9	GA3000916	PULLEY TWIN, 76 X 22 X 13mm, A PROFILE, SUIT GA3000915, 24-1504	1
10	GA5056520	V BELT, AIR CONDITIONER, BILBERRY OPTION, 13A1055	1
11	GA5056525	V BELT, ALTERNATOR, 24V, BILBERRY OPTION, 13A0675	1
12	GA5000117	WASHER 10mm FLAT SS HD	4
13	GA5003643	WASHER M8 FLAT SS HD	4

Belt Tension Bracket, Alternator (Bilberry)

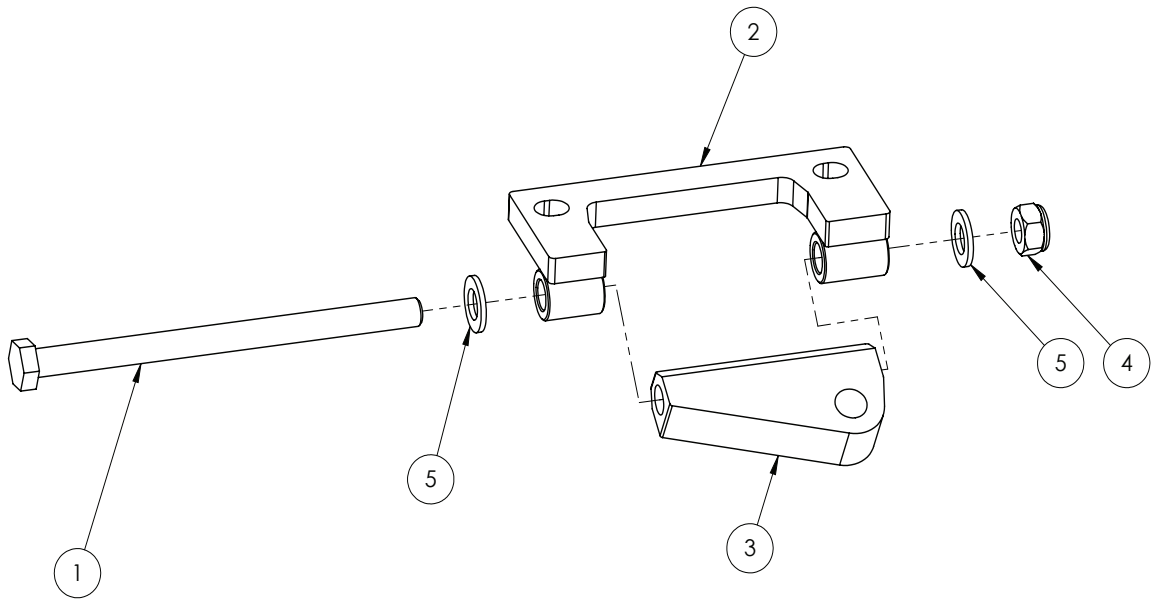

ITEM NO.	PART NUMBER	DESCRIPTION	QTY.
1	GA5006093	BOLT M10 X 150 GR8.8 ZP	1
2	GA4604410	BRACKET, ALTERNATOR BELT TENSION, 24V, G6 BILBERRY, MY22	1
3	GA4562100	DOUBLE PIVOT AIRCON COMPRESSOR	1
4	GA5000141	NUT M10 NYLOC ZP	1
5	GA5000117	WASHER 10mm FLAT SS HD	2

Bracket Assembly, Alternator (Bilberry)

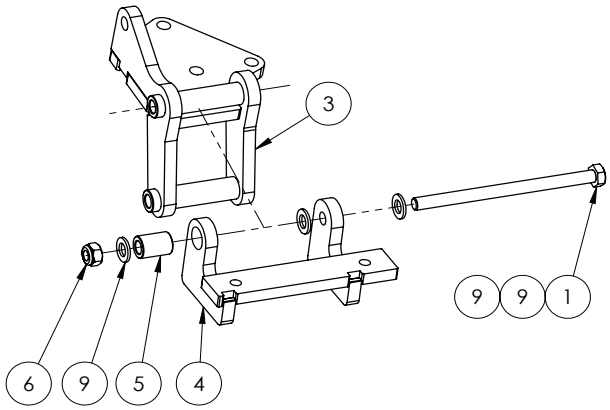

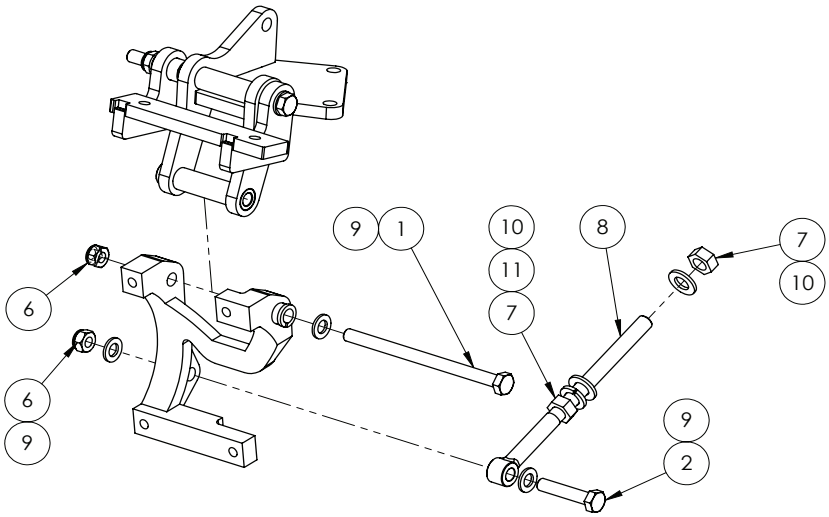

ITEM NO.	PART NUMBER	DESCRIPTION	QTY.
1	GA5006093	BOLT M10 X 150 GR8.8 ZP	2
2	GA5006057	BOLT M10 X 50 GR8.8 ZP	1
3	GA4604405	BRACKET, AC AND ALTERNATOR, 24V, G6 BILBERRY, MY22	1
4	GA4604400	BRACKET, ALTERNATOR SWING, 24V, G6 BILBERRY, MY22	1
5	GA4562270	BUSH, PIVOT, 18X22MM, ZP, 24V ALTERNATOR, BILBERRY WEED DETECT, MY22	1
6	GA5000141	NUT M10 NYLOC ZP	3
7	GA5000559	NUT M12 HEX ZP	2
8	GA0500156	SWING ADJUSTER BOLT, M12X120MM, 185mm LONG, ZP	1
9	GA5000117	WASHER 10mm FLAT SS HD	6
10	GA5000577	WASHER 12mm FLAT SS HD	2
11	GA5000575	WASHER 12mm SPRING SS	1

Intake Plumbing - with Air Cleaner Bracket A

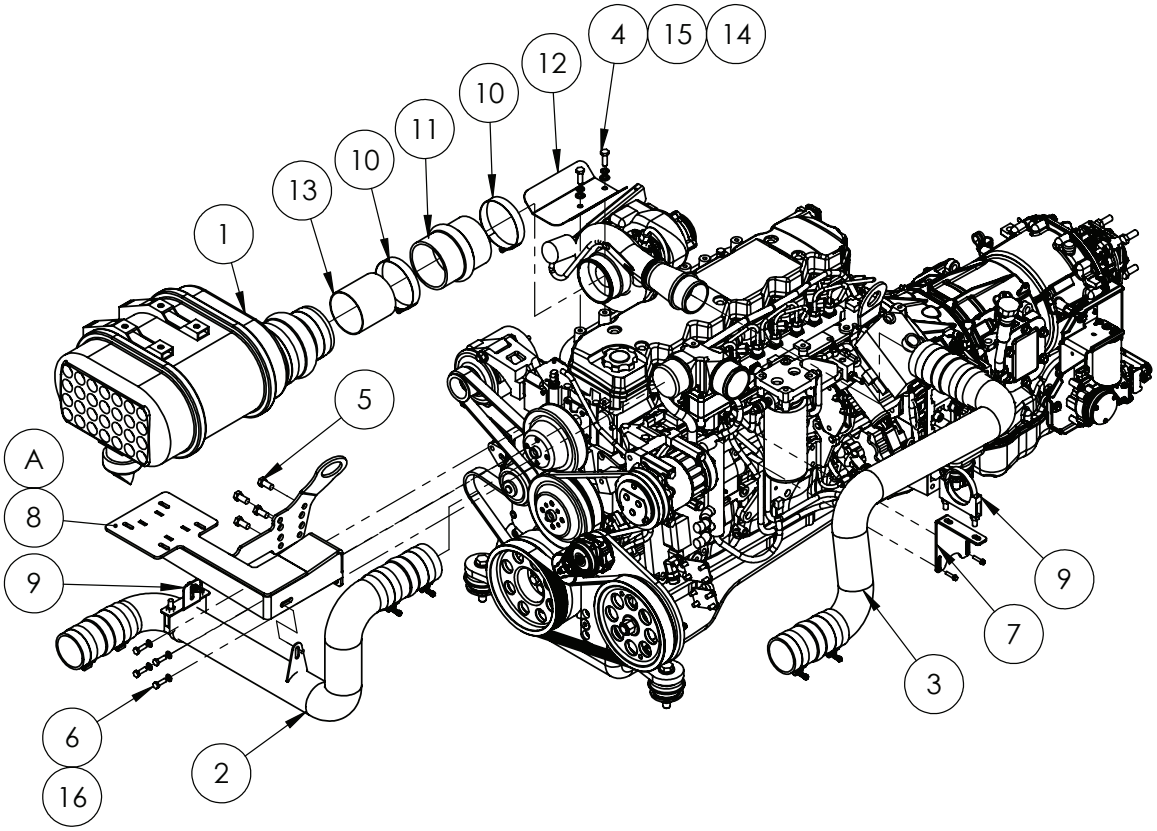

ITEM NO.	PART NUMBER	DESCRIPTION	QTY.
1	*	AIR FILTER, ASSEMBLY, ENGINE, G6, MY20	1
2	*	ASSEMBLY DRAWING ONLY. CHARGE AIR PIPE RH ASSEMBLY	1
3	*	CHARGE AIR PIPE LH ASSEMBLY	1
4	GA5065455	BOLT M10 X 30 GR8.8 ZP	2
5	GA5011229	BOLT M12 X 25 GR8.8 ZP	4
6	GA5004711	BOLT M8 X 25 GR8.8 ZP	4
7	GA4503755	BRACKET-CHARGE AIR PIPE TO THROTTLE BODY MNT	1
8	GA4658940	CROP CRUISER AIR CLEANER MOUNT QSB	1
9	GA5002297	EXHAUST CLAMP -79mm (3.125 IN)	2
10	GA5010197	HOSE CLAMP - INTERCOOLER PIPES	2
11	GA5066526	HUMP HOSE - 4”	1
12	GA4503765	HEAT SHEILD - TURBO TO AIR CLEANER SP2011	1
13	GA5065171	PIPE S/S - 101 OD X 2 CUT 100 SC	1
14	GA5000117	WASHER 10mm FLAT SS HD	2
15	GA5000137	WASHER 10mm SPRING SS	2
16	GA5003643	WASHER 8mm FLAT SS HD	4

* Sub-assembly on following pages

Intake Plumbing - with Air Cleaner Bracket B

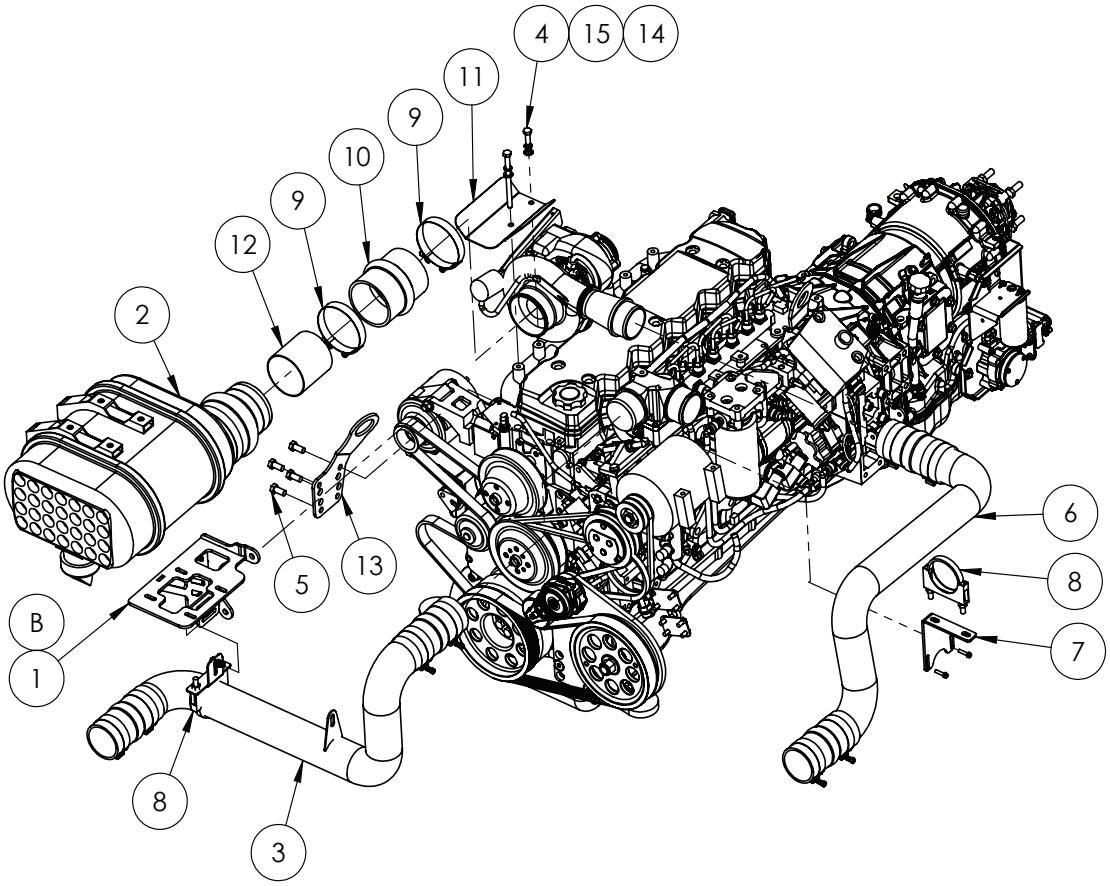

ITEM NO.	PART NUMBER	DESCRIPTION	QTY.
1	GA4661085	AIR CLEANER BRACKET, QSB6.7 ALTERNATOR MOUNTED, SUPER CRUISER, G8	1
2	*	AIR FILTER, ASSEMBLY, ENGINE, G6, MY20	1
3	*	ASSEMBLY DRAWING ONLY, CHARGE AIR PIPE RH ASSEMBLY	1
4	GA5065455	BOLT M10 X 30 GR8.8 ZP	1
5	GA5011229	BOLT M12 X 25 GR8.8 ZP	4
6	*	CHARGE AIR PIPE LH ASSEMBLY	1
7	GA4503755	BRACKET-CHARGE AIR PIPE TO THROTTLE BODY MNT	1
8	GA5002297	CLAMP EXHAUST 3. 1/8	2
9	GA5010197	HOSE CLAMP 4", 109-117MM, T-BOLT 012, P148343	2
10	GA5066526	RUBBER HUMP JOINER 4	1
11	GA4503765	HEAT SHIELD-AIR CLEANER SP 2011 S/S	1
12	GA5065171	EXHAUST TUBE, STAINLESS STEEL 4", 100MM LONG	1
13	GA4502541	PLATE, ENGINE LIFTING LUG QSB6.7	1
14	GA5000117	WASHER M10 FLAT SS HD	19
15	GA5000137	WASHER 10MM SPRING SS	2

* Sub-assembly on following pages

Air Cleaner

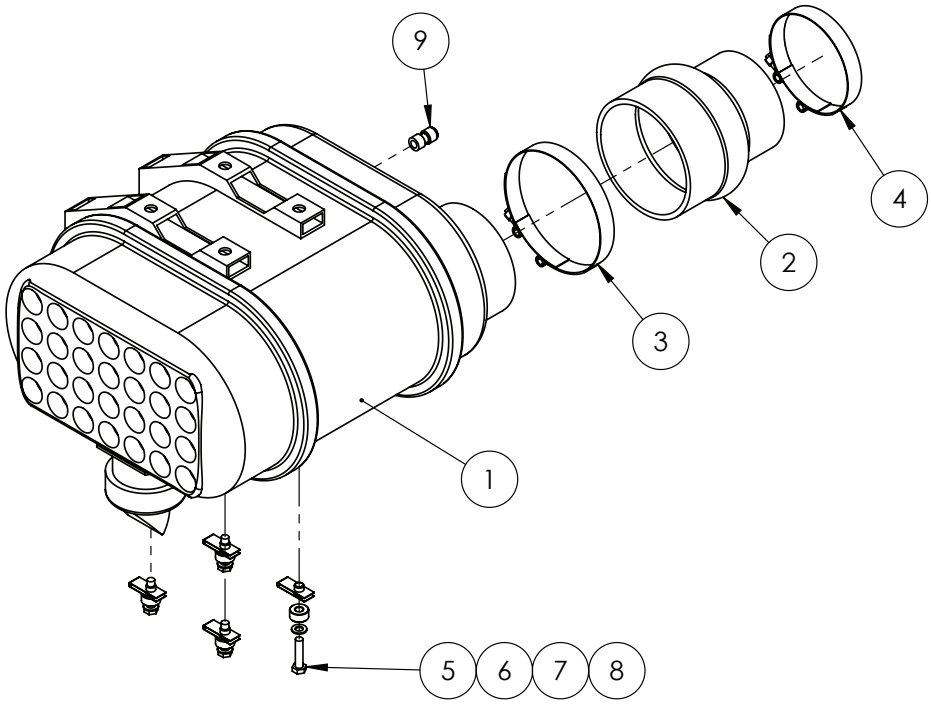

AIR FILTER SERVICE PARTS

PART NUMBER	DESCRIPTION
GA5069031	GA5069031, AIR CLEANER ELEMENT, PRIMARY, SUIT GA5069030 “D100072”, DONALDSON, P608666 (UP TO NOVEMBER 2023)
GA5026075	AIR CLEANER ELEMENT, PRIMARY, SUIT GA5069030 D100398, DONALDSON P957050 (POST NOVEMBER 2023)
GA5069032	AIR CLEANER SAFETY ELEMENT, SUIT GA5069030, DONALDSON

ITEM NO.	PART NUMBER	DESCRIPTION	QTY.
1	GA5069030	AIR CLEANER, POWERCORE SUIT QSB 6.7L, INCLUDES ELEMENTS, DONALDSON	1
2	GA5010347	HUMP REDUCER 5" X 4"	1
3	GA5010201	HOSE CLAMP 5" T-BOLT	1
4	GA5010197	HOSE CLAMP 4" T-BOLT	1
5	GA5011481	BOLT M8 X 35 GR8.8 ZP	4
6	GA5003643	WASHER 8MM FLAT SS HD	4
7	GA4552830	SPACER, SEAT BASE	4
8	GA5025260	SPEED CLIP, M8	4
9	GA5070450	FEMALE ADAPTOR PUSH IN 6MM X 1/8" BSP	1

Charge Air Intake Pipe RH

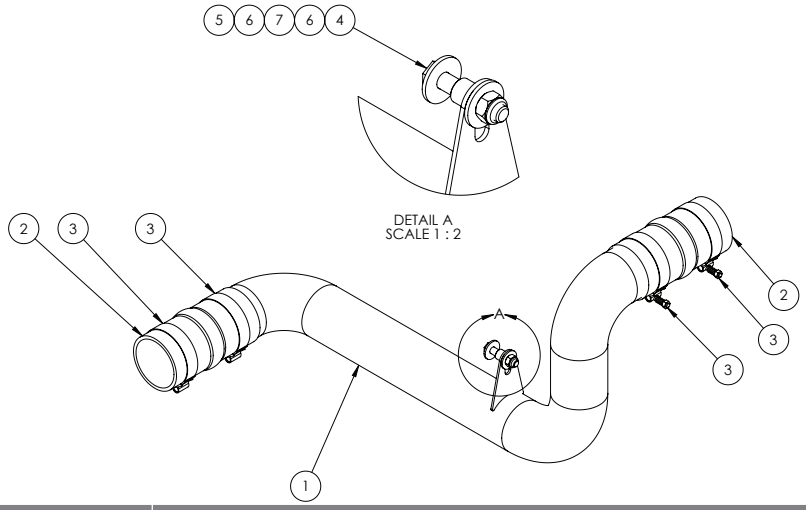

ITEM NO.	PART NUMBER	DESCRIPTION	QTY.
1	GA5069230	PIPE CHARGE AIR C/W WELD ON TAB	1
2	GA5069885	HUMP HOSE - SUIT CAC PIPES	2
3	GA5069880	CLAMP-SPRING 2" SUIT CAC PIPES	4
4	GA5006057	BOLT M10 X 50 GR8.8 ZP	1
5	GA5000141	NUT M10 NYLOC ZP	1
6	GA5002627	WASHER 3/8" ID X 1 1/8" OD HIGH TENSILE	2
7	GA4552075	CRUSH TUBE, 10.2 ID X 15 OD X 15 MM LONG	1

Charge Air Intake Pipe LH

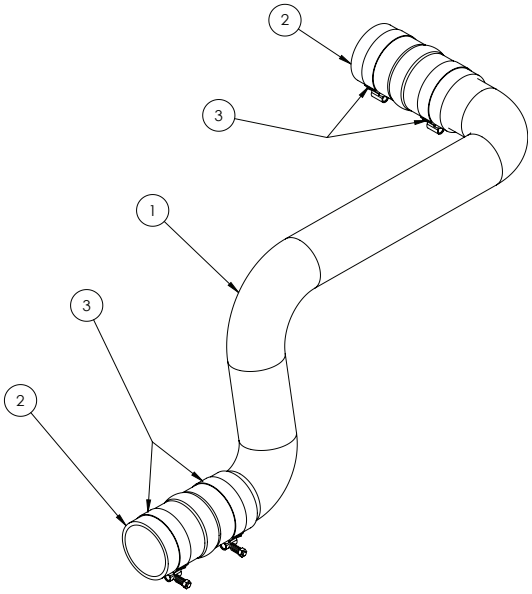

ITEM NO.	PART NUMBER	DESCRIPTION	QTY.
1	GA5069235	CHARGE AIR PIPE-SP2011 LH	1
2	GA5069885	HUMP HOSE -SUIT CAC PIPES CCSP (3071051)	2
3	GA5069880	CLAMP-SPRING 2" SUIT CAC PIPES CCSP (3926702)	4

Cooling Plumbing

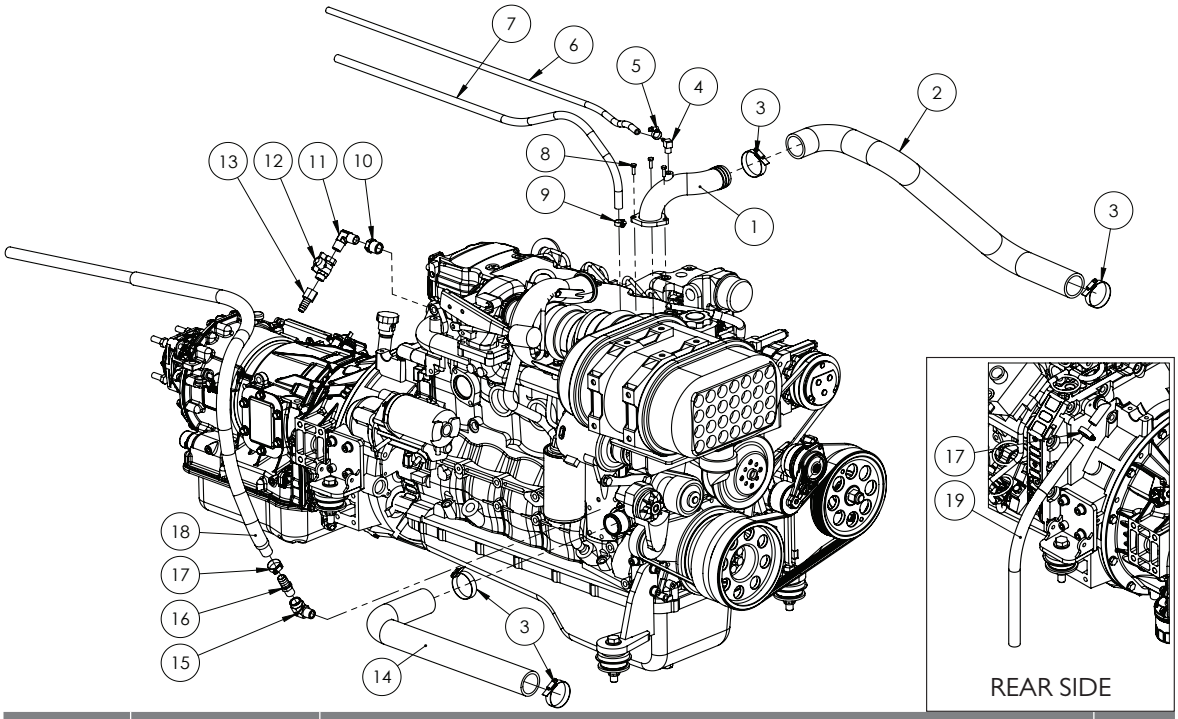

ITEM NO.	PART NUMBER	DESCRIPTION	QTY.
1	GA4657280	THEROMOSTAT HOUSING ELBOW	1
2	GA5070485	RADIATOR HOSE, UPPER, GREEN SILICONE, HYDAC	1
3	GA5016815	HOSE CLAMP, 50-70 /12 C7 W4, SS	4
4	GA5048340	ELBOW, 90 DEGREE, 1/4” MALE THREAD X 1/4” HOSE, BRASS	1
5	GA5004865	HOSE CLAMP, 3/8",SS (8-16/9W)	1
6	GA5069255	HOSE, HEATER, 1/4", 6MM, EPDM, BLACK - CUT TO 1000 MM	1
7	GA5010211	HOSE, FUEL LINE, 3/8" ID, BLACK - CUT TO 1000 MM	1
8	GA5004053	BHCS M6 X 20 SS A2-70	3
9	GA5004861	HOSE CLAMP 1/4", SS (8-12, 7.5W3P)	1
10	GA3500204	HYDRAULIC ADAPTOR, REDUCING BUSH, 3/4” BSPT MALE X 1/2” BSPT FEMALE	1
11	GA3500262	HYDRAULIC ADAPTOR, ELBOW, 90 DEGREE, 1/2” BSPT MALE X 1/2” BSPT MALE	1
12	GA5020615	VALVE, BALL, 12MM, 1/2” MALE, FEMALE BUTTERFLY, BRASS	1
13	GA4903350	WATER RESTRICTOR SUIT QSB ENGINE	1
14	GA5070486	RADIATOR HOSE, LOWER RIGHT HAND SIDE, GREEN SILICONE, HYDAC	1
15	GA3500210	HYDRAULIC ADAPTOR, ELBOW, 90 DEGREE, 1/2” BSPT MALE X 1/2” BSPT FEMALE	1
16	GA5022070	HOSETAIL BRASS 1/2" THREAD X 3/4" BARB	1
17	GA5000999	HOSE CLAMP, 3/4” SS (16-27/12W)	2
18	GA5069260	HOSE, HEATER, 3/4, 19MM, EPDM, BLACK - CUT TO 1500 MM	1
	GA5053710	RAWHIDE HOSE PROTECTOR 31MM - CUT TO 1000 MM	1
19	GA2000216	HOSE, PRESSURE, 20MM, BLACK 250PSI - CUT TO 1080 MM	1

Hydraulic Pumps

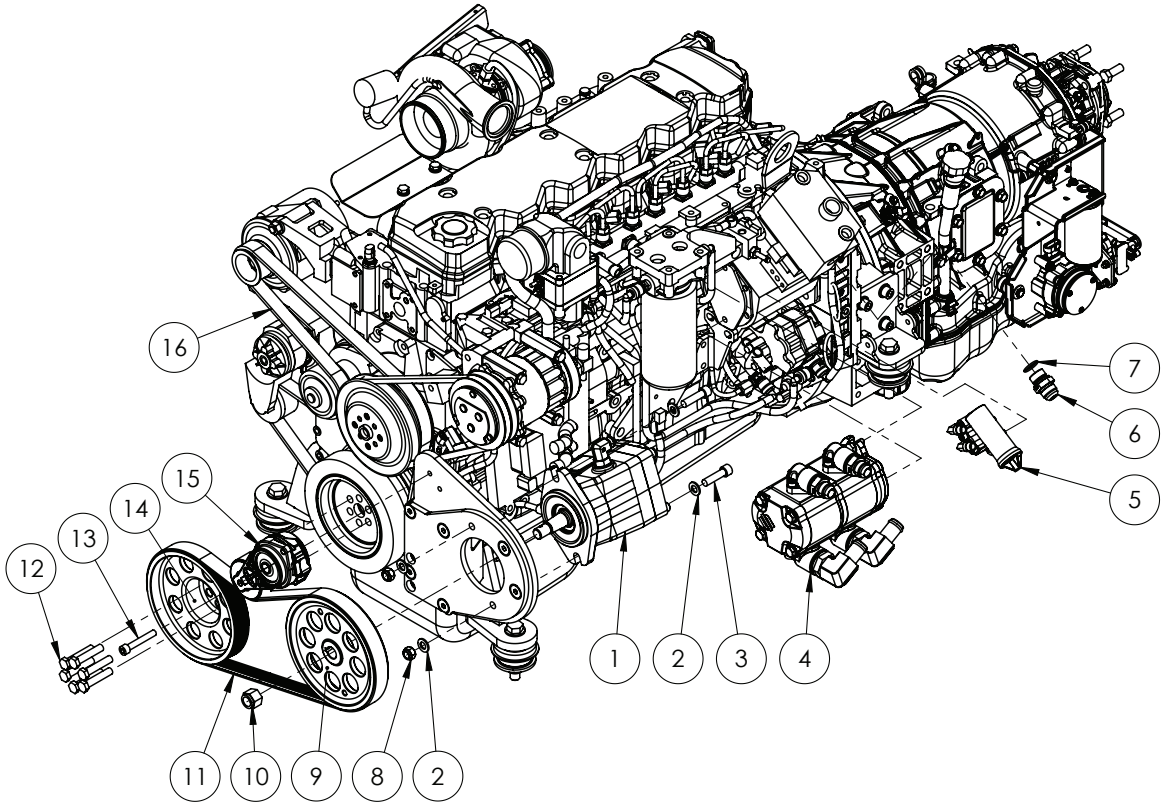

ITEM NO.	PART NUMBER	DESCRIPTION	QTY.
1	*	HYDRAULIC PISTON PUMP	1
2	GA5000577	WASHER 12MM FLAT SS HD	19
3	GA5000325	SHCS M12 X 45 GR12.9 ZP	6
4	*	HYDRAULIC GEAR PUMPS	1
5	*	AIR GOVERNOR VALVE	1
6	GA5077883	HYDRAULIC ADAPTOR, NIPPLE, 1 1/16” JIC MALE X M27 X 2.0 MALE	1
7	GA5078122	O-RING BSPP 3/4"	1
8	GA5012461	NUT M12 NYLOC ZP	2
9	GA4551120	PULLEY, HYDRAULIC PUMP, 210MM DIAMETER 8PK MULTIRIB BELT	1
10	GA5049495	NUT 3/4 UNF NYLOC ZP	1
11	GA2700098	BELT, MULTIRIB, 8PK 1365, RBK SCC, OPTIBELT	1
12	GA5000335	BOLT M12 X 60 GR8.8 ZP	6
13	GA0500087	SHCS M10 X 65, ZP, GR 12.9	1
14	GA4551125	PULLEY, ENGINE, HYDRAULIC PUMP, 210MM DIAMETER 8PK MULTIRIB BELT	1
15	GA2700094	PRETENSIONER, PULLEY SUIT 8PK MULTIRIB BELT	1
16	GA5075275	BELT, SERPENTINE, WATER PUMP ALTERNATOR, QSB6.7L, CUMMINS	1

* Sub-assembly on following pages

Hydraulic Piston Pump

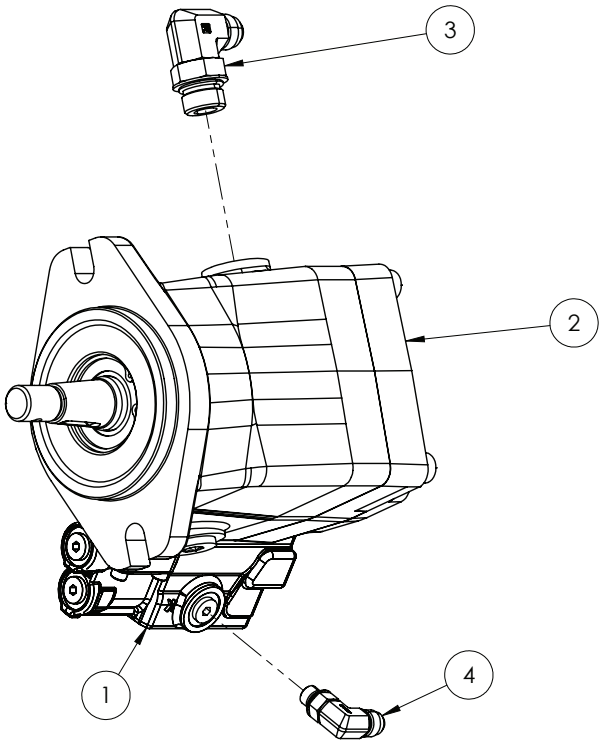

ITEM NO.	PART NUMBER	DESCRIPTION	QTY.
-	GA3501958	SEAL KIT, OVERHAUL, HYDRAULIC PUMP, K45, DANFOSS, SUIT, GA3500680	-
1	GA3501809	CONTROL VALVE, COMPENSATOR, 45CC HYDRAULIC PISTON PUMP GA3500680	1
2	GA3500680	HYDRAULIC PUMP, 45CC, PISTON, VARIABLE DISPLACEMENT, LOAD SENSE, TAPERED SHAFT, CODE 61 END PORTS	1
3	GA3500761	HYDRAULIC ADAPTOR, ELBOW, 7/8” UNO TO 3/4” JIC, 90 DEG, S91-1214	1
4	GA3500730	HYDRAULIC ADAPTOR, ELBOW, 9/16” UNO TO 7/16” JIC, 90 DEG, S91-0907	1

Hydraulic Gear Pumps

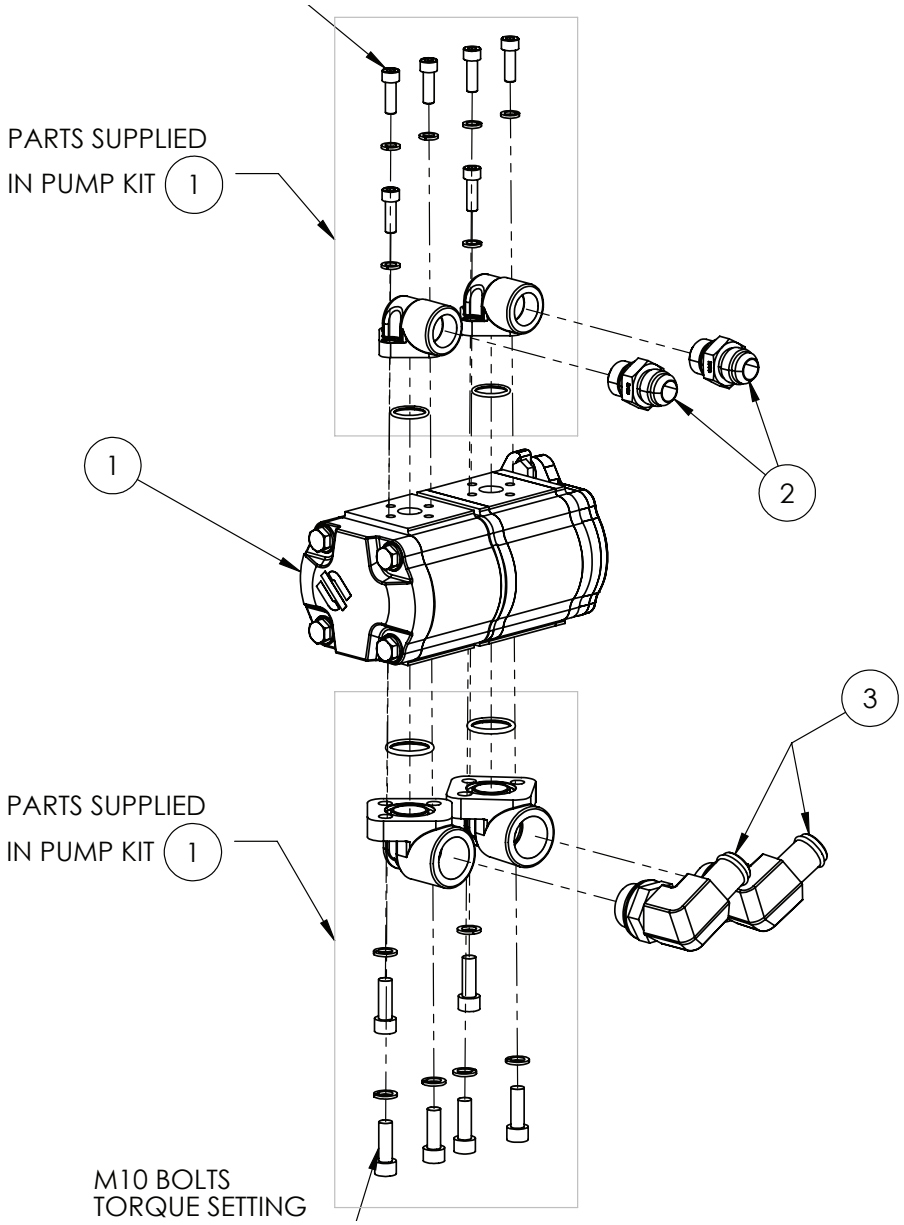

ITEM NO.	PART NUMBER	DESCRIPTION	QTY.
-	GA3500121	SEAL KIT, HYDRAULIC PUMP, SINGLE ONLY, SUIT GA3500055 AND GA3500007 (2 REQUIRED PER PUMP)	-
1	GA3500007	PUMP, HYDRAULIC, 22+32CC, 11 TOOTH SPLINE, INCLUDING PORT ADAPTORS	1
2	GA3500711	HYDRAULIC ADAPTER, NIPPLE, 3/4" BSPP O-RING MALE X 1 1/16" JIC MALE	2
3	GA3500774	HYDRAULIC BARB COUPLING, ELBOW, 1" BSPP O-RING, 1" BARB MALE, RA12S-90-1616, HANSA-FLEX	2

Air Governor

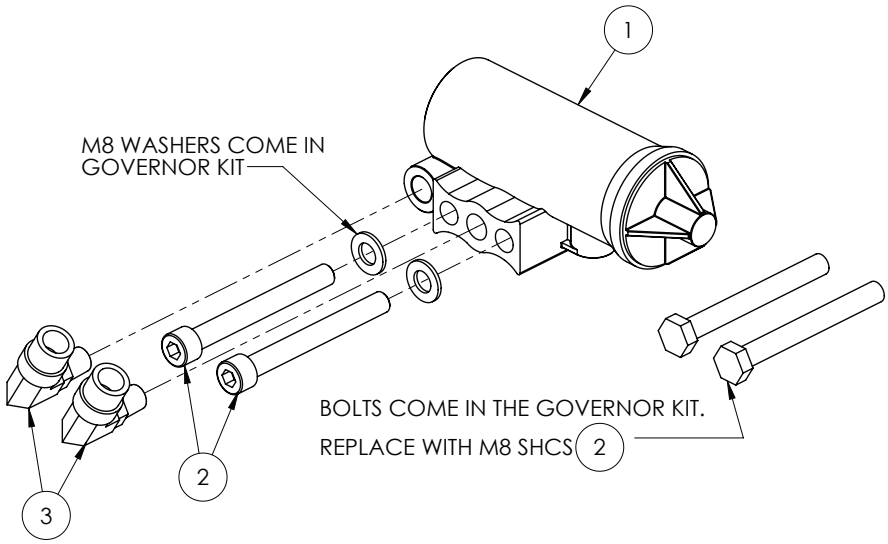

ITEM NO.	PART NUMBER	DESCRIPTION	QTY.
1	GA5007623	D2 GOVERNOR VALVE	1
2	GA5049430	SHCS M8 X 70 GR12.9 ZP	2
3	GA5078525	AIR FITTING, ELBOW, SWIVEL, 3/8” TUBE, 1/8” NPT MALE, PUSH IN, BRASS	2

Engine Mounts

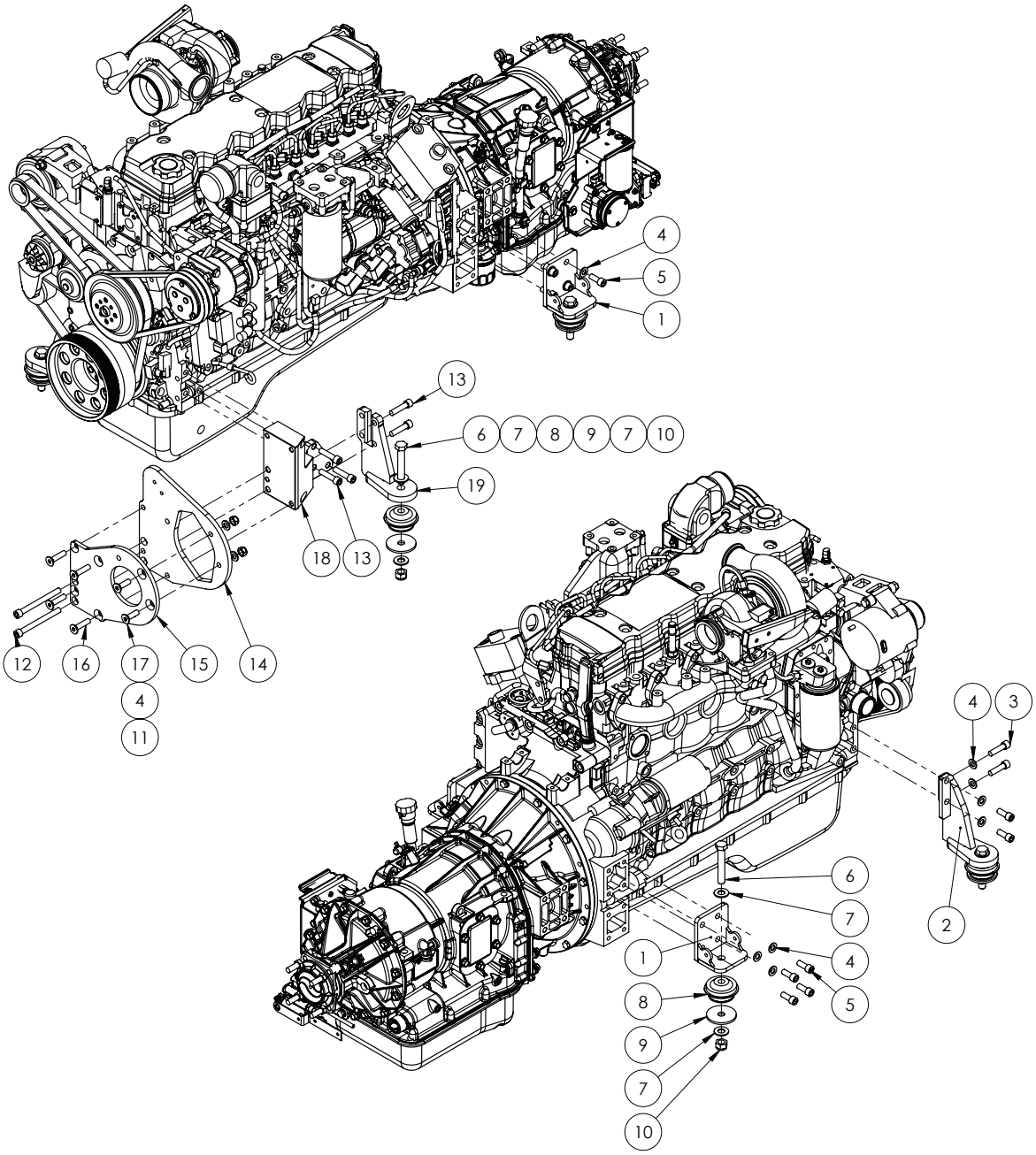

ITEM NO.	PART NUMBER	DESCRIPTION	QTY.
-	GA4409750	SHIM, SERIES 2 ENGINE MOUNT BLOCK LH, 0.5MM	-
1	GA4654971	ENGINE MOUNT SCSP REAR	2
2	GA4656610	ENGINE MOUNT SCSP FRONT RH	1
3	GA5000325	SHCS M12 X 45 GR12.9 ZP	2
4	GA5000577	WASHER 12MM FLAT SS HD	12
5	GA5000307	SHCS M12 X 30 GR12.9 ZP	10
6	GA5011269	BOLT M16 X 100 GR8.8 ZP	4

Continued over page

Engine Mounts

ITEM NO.	PART NUMBER	DESCRIPTION	QTY.
7	GA5001043	WASHER 16MM FLAT SS HD	8
8	GA5070020	VIBRATION ISOLATOR - 80MM	4
9	GA4502820	WASHER, 70MM OD X 16.5MM ID X 5MM THICK	4
10	GA5001029	NUT M16 NYLOC ZP	4
11	GA5012461	NUT M12 NYLOC ZP	2
12	GA0500105	SHCS M12 X 130, ZP, GR 12.9	2
13	GA5051470	SHCS M12 X 50 GR12.9 ZP	5
14	GA4408910	PLATE, MOUNT, BELT TENSIONER, ENGINE MOUNT	1
15	GA4408905	PLATE, MOUNT, HYDRAULIC PUMP, ENGINE MOUNT	1
16	GA0500104	CSK M12 X 50, GR12.9, ZP	4
17	GA0500103	CSK M12 X 40, GR12.9, ZP	2
18	GA4551550	ENGINE MOUNT BLOCK, FRONT, LH	1
19	GA4603385	ENGINE MOUNT, FRONT, LH	1

Sump Drain

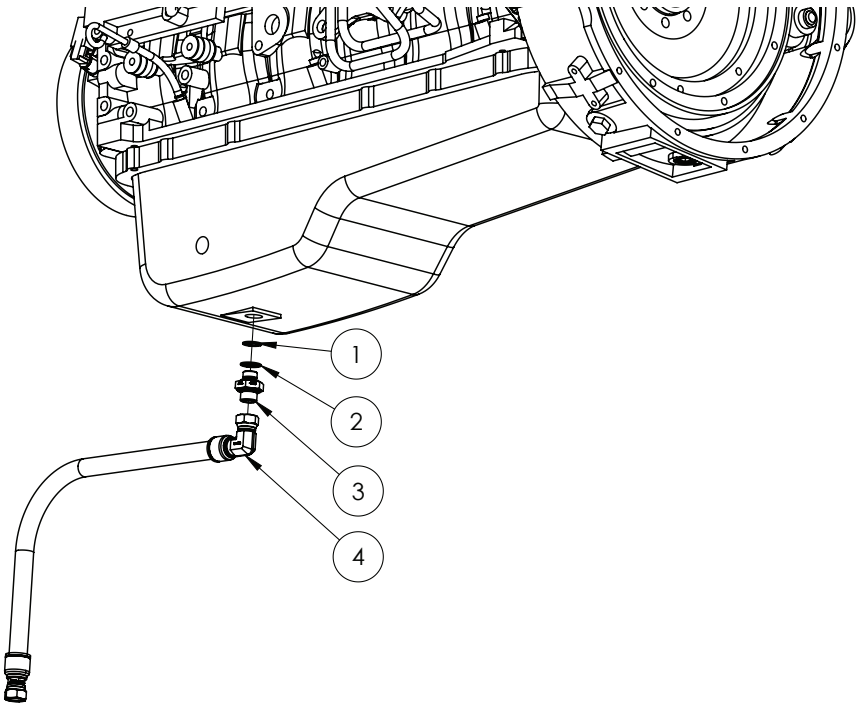

ITEM NO.	PART NUMBER	DESCRIPTION	QTY.
1	GA5070725	COPPER WASHER 18 MM X 1.5	1
2	GA5077886	HYDRAULIC SEAL, METAL BONDED, M18	1
3	GA3500484	HYDRAULIC ADAPTOR NIPPLE, M18 X 1/2” BSPP	1
4	GA4908095	HYDRAULIC HOSE, HYDRAULIC HOSE, SUMP, DRAIN, ENGINE	1

Exhaust - Turbo Pipe

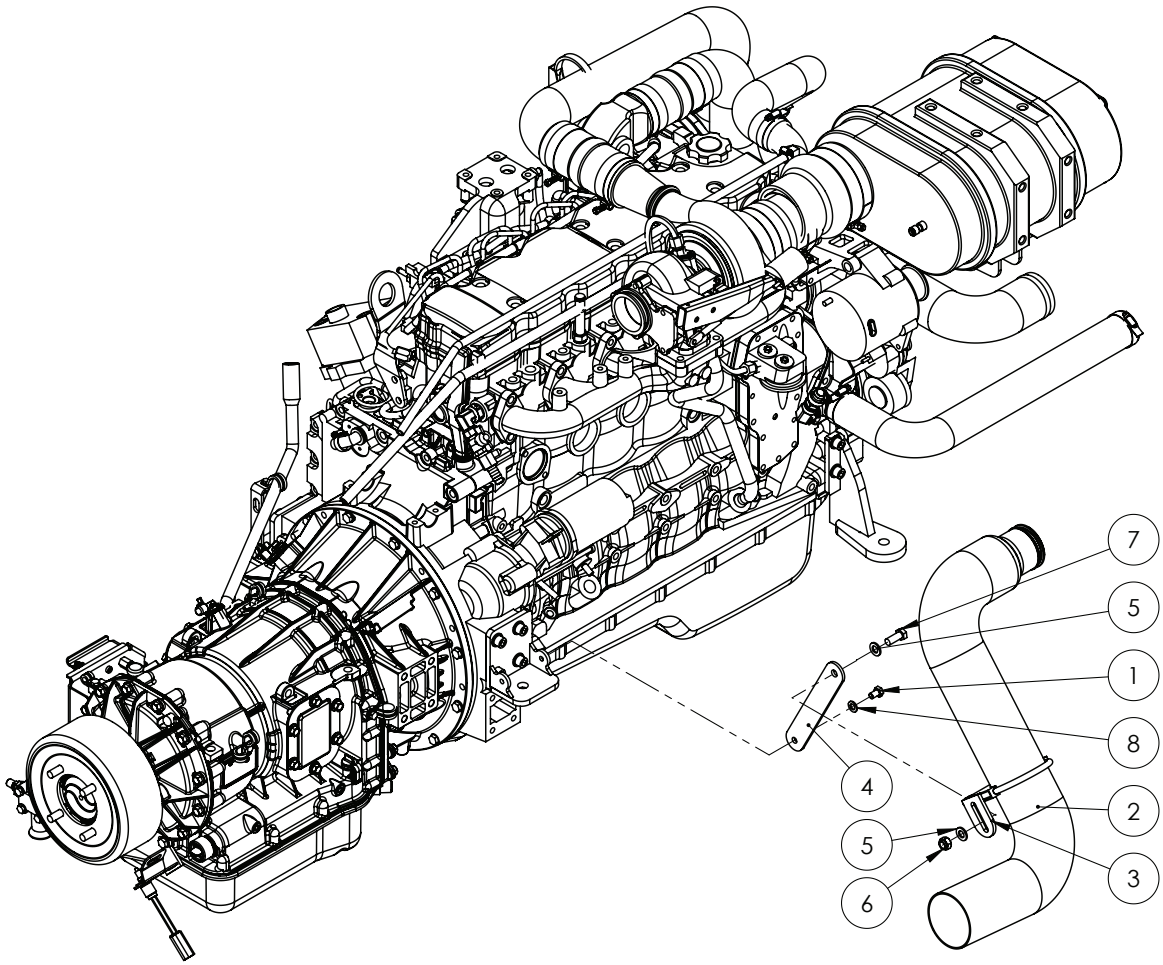

ITEM NO.	PART NUMBER	DESCRIPTION	QTY.
-	GA5053700	EXHAUST HEAT WRAP FIBREGLASS BLACK, SOLD PER ROLL	1
-	GA5055470	TIE CABLE SS 520MM SS316	-
1	GA5006143	BOLT M10 X 16 GR8.8 ZP	1
2	GA5062502	EXHAUST PIPE, TURBO TO BELLOW	1
3	GA4658836	EXHAUST CLAMP BRACKET 'S' BEND PIPE	1
4	GA4402135	PLATE, EXHAUST SUPPORT BRACKET	1
5	GA5000577	WASHER 12MM FLAT SS HD	2
6	GA5012461	NUT M12 NYLOC ZP	1
7	GA5000305	SET SCREW M12 X 30 GR8.8 ZP	1
8	GA5000117	WASHER 10MM FLAT SS HD	1

Exhaust Stack

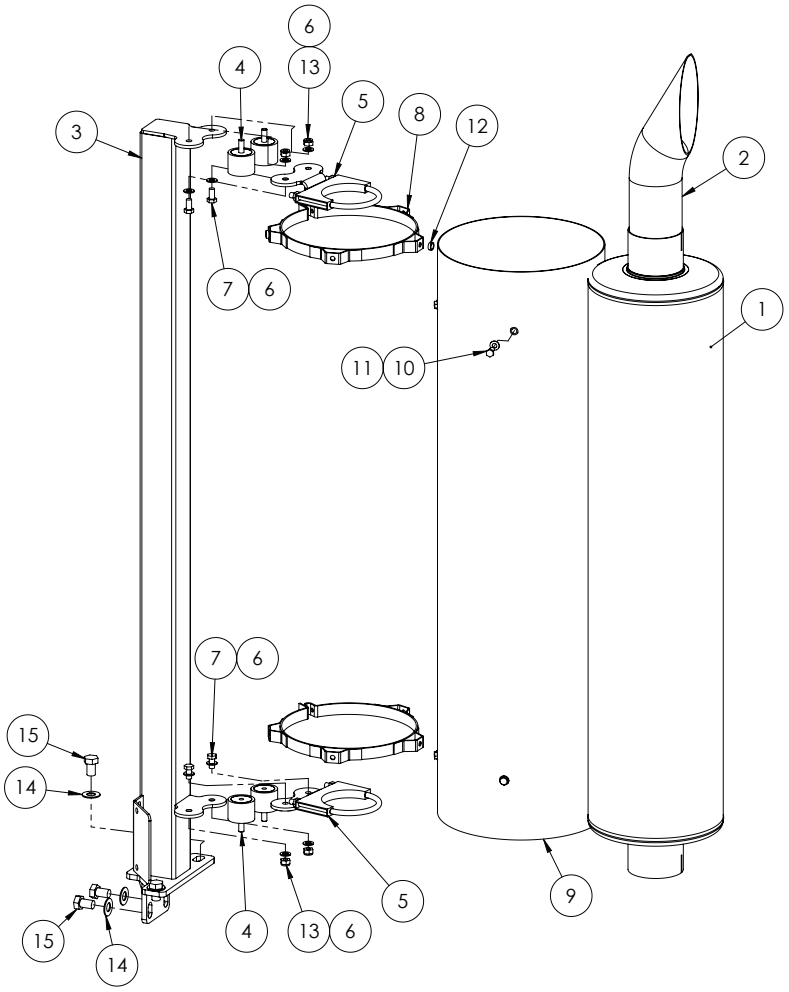

ITEM NO.	PART NUMBER	DESCRIPTION	QTY.
1	GA5069240	MUFFLER EXHAUST, 4”	1
2	GA2700010	EXHAUST PIPE, CHROME DEFLECTOR TIP, 4", 600MM	1
3	GA4659785	EXHAUST STACK STAND REAR MOUNTED	1
4	GA5014609	RUBBER BUFFER	4
5	GA4658830	EXHAUST CLAMP / BUFFER BRACKET DOUBLE	2
6	GA5000117	WASHER 10MM FLAT SS HD	8
7	GA5006113	BOLT M10 X 20 ZP GR8.8	4
8	-	MOUNT BRACKET EXHAUST HEAT SHIELD	2
9	GA4505985	HEAT SHIELD EXHAUST 360 DEGREE	1
10	GA5048485	SET SCREW, 5/16" BSW X 3/4", SS GR8	8
11	GA5003631	WASHER 5/16” FLAT SS	8
12	GA4552080	CRUSH TUBE, 10.2 ID X 15 OD X 5MM LONG	8
13	GA5000141	NUT M10 NYLOC ZP	4
14	GA5001043	WASHER 16MM FLAT SS HD	4
15	GA5000903	BOLT M16 X 25 ZP GR8.8	4

Exhaust

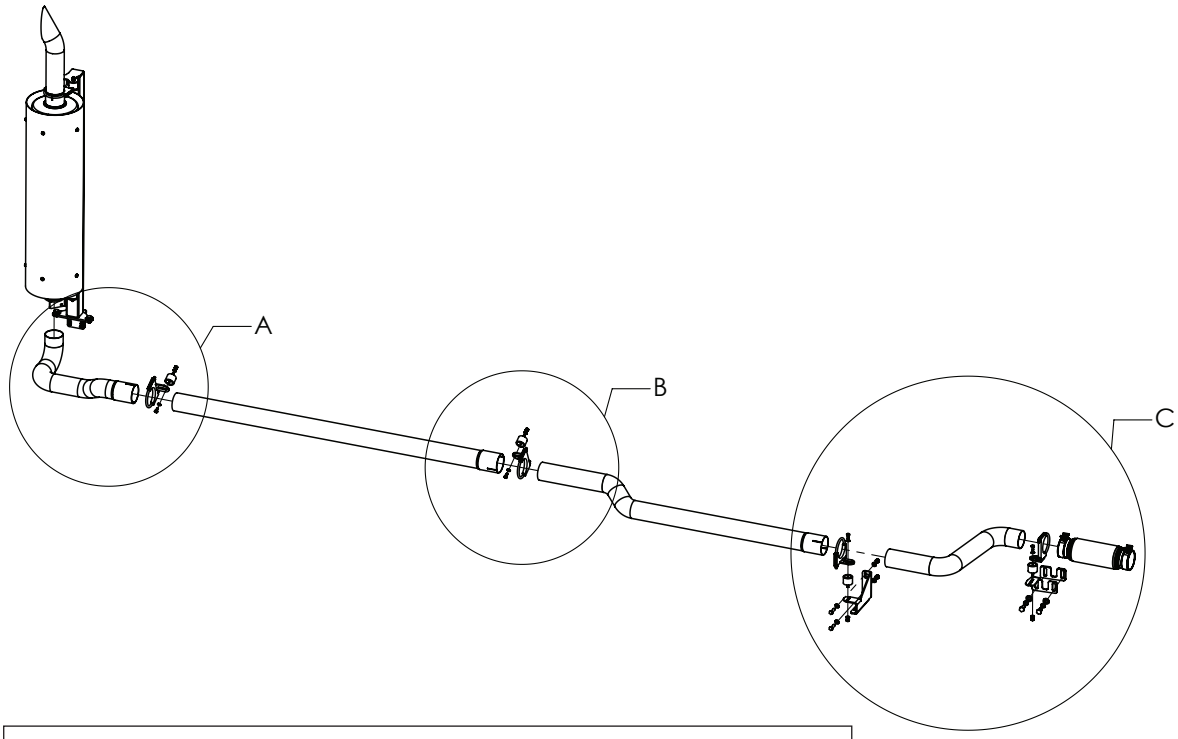

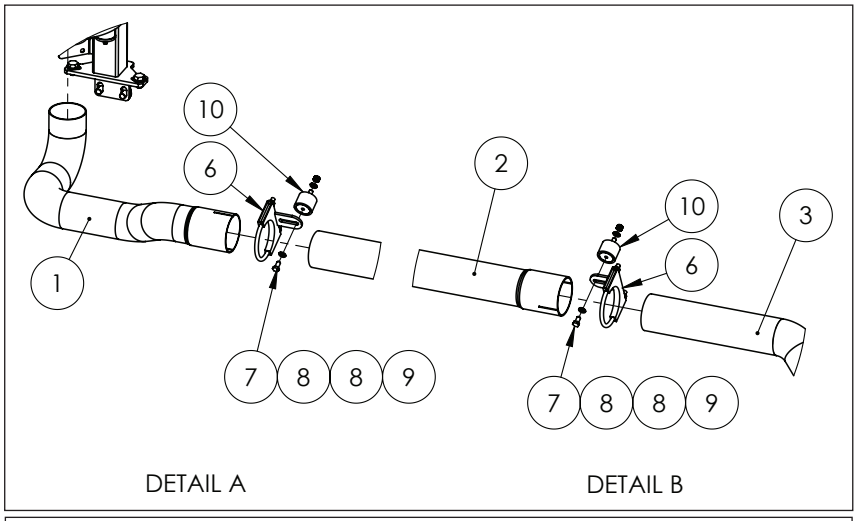

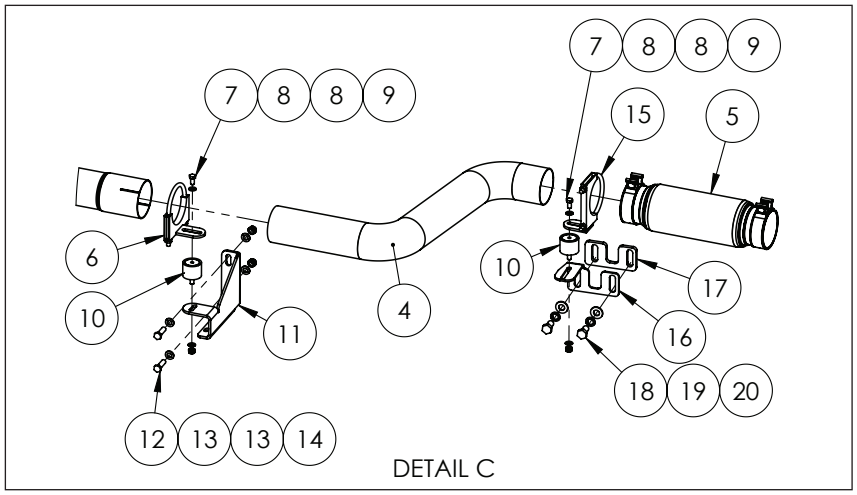

Continued over page

Exhaust

ITEM NO.	PART NUMBER	DESCRIPTION	QTY.
1	GA5070985	EXHAUST PIPE SECTION A SUIT 6000L SP	1
2	GA5070990	EXHAUST PIPE SECTION B SUIT 6000L SP	1
3	GA5070995	EXHAUST PIPE SECTION C SUIT 6000L SP	1
4	GA5068955	EXHAUST PIPE-S SHAPE-SUIT R/H ACCESS STEP SP 2011	1
5	GA5068741	EXHAUST BELLOW, 4", INC CLAMPS	1
6	GA4658835	EXHAUST CLAMP/BUFFER BRACKET-SINGLE SP2011	3
7	GA5006113	BOLT M10 X 20 GR8.8 ZP	4
8	GA5000117	WASHER 10MM FLAT SS HD	8
9	GA5000141	NUT M10 NYLOC ZP	4
10	GA5014609	RUBBER BUFFER, 50MM DIA X 40MM LONG, M10 X 25 MALE X M10 FEMALE	4
11	GA4503855	BRACKET -EXHAUST AIR BAG MNT-SP2011	1
12	GA5000319	BOLT GR 8.8 ZP M12X40	2
13	GA5000577	WASHER 12MM FLAT SS HD	4
14	GA5012461	NUT M12 NYLOC ZP	2
15	GA4658836	EXHAUST CLAMP/BUFFER BRACKET-SINGLE SP2011	1
16	GA4504420	MOUNT- EXHAUST TO CHASSIS SP 2011	1
17	GA4505080	PLATE SPACER EXHAUST MOUNT BRACKET	1
18	GA5000911	BOLT M16 X 30 GR8.8 ZP	2
19	GA5001051	WASHER 16MM SPRING SS	2
20	GA5001043	WASHER 16MM FLAT SS HD	2

* Sub-assembly on following pages

Transmission

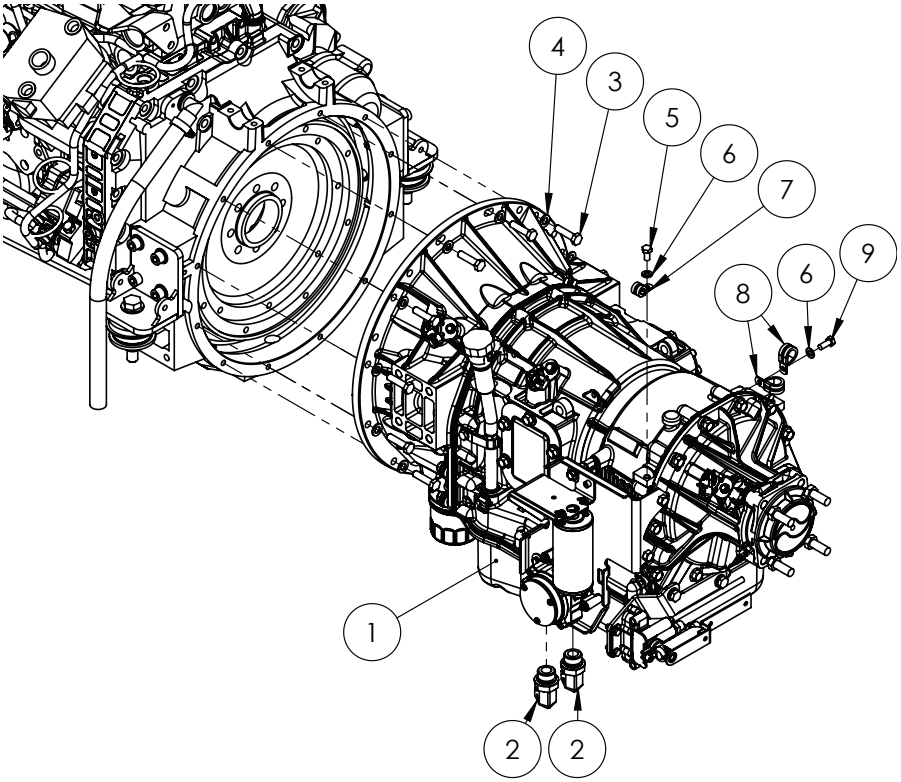

TRANSMISSION SERVICE PARTS

PART NUMBER	DESCRIPTION
GA5048280	FILTER , ALLISON - SPIN ON
GA5048285	FILTER , ALLISON - INTERNAL
GA5013769	REAR MAIN OIL SEAL - ALLISON TRANSMISSION

ITEM NO.	PART NUMBER	DESCRIPTION	QTY.
1	*	TRANSMISSION ASSEMBLY	-
2	GA3500763	HYDRAULIC ADAPTOR, ELBOW, 1 1/16" UNO TO 3/4" JIC, 90 DEGREE	2
3	GA5006071	BOLT M10 X 40 GR10.9 ZP	12
4	GA5000117	WASHER 10MM FLAT SS HD	12
5	GA5011465	BOLT M8 X 16 GR8.8 ZP	1
6	GA5003643	WASHER 8MM FLAT SS HD	2
7	GA5055970	CLAMP P 10MM PC1020W1	2
8	GA5055975	CLAMP P 27MM PC2720W1	1
9	GA5004085	BOLT M8 X 20 GR8.8 ZP	1

* Sub-assembly on following pages

Transmission Assembly

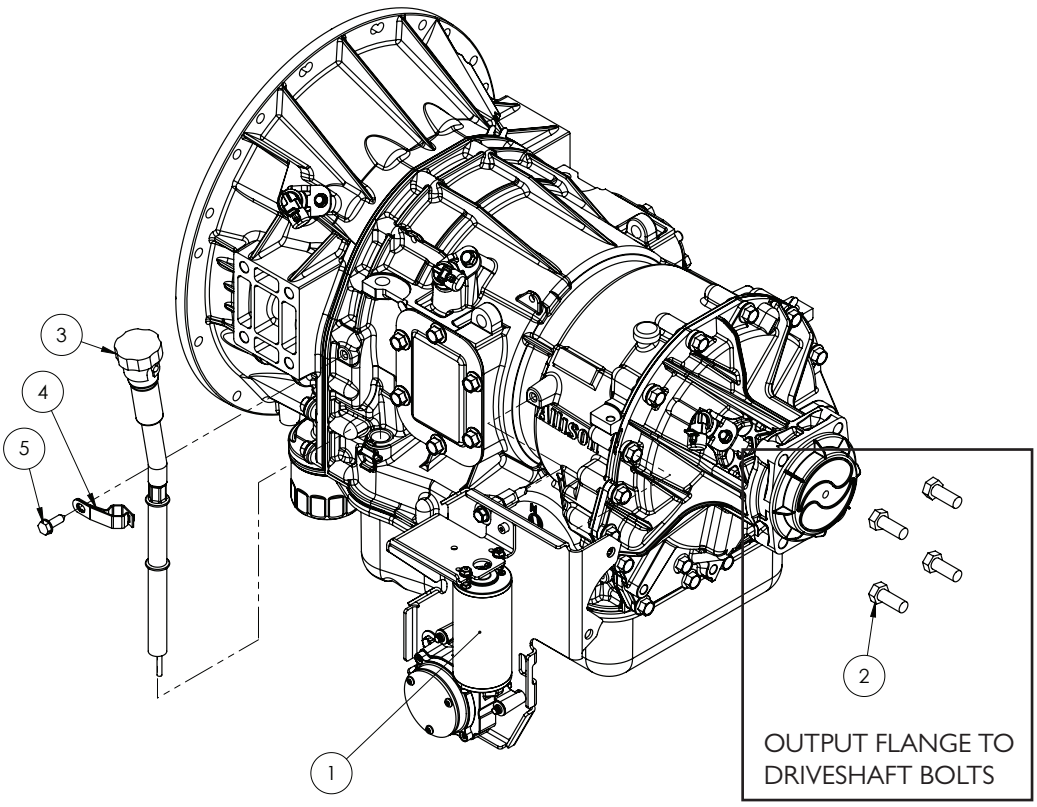

ITEM NO.	PART NUMBER	DESCRIPTION	QTY.
1	GA3000077	ACTUATOR, DRIVE MOTOR ASSEMBLY, PUSH BUTTON GEAR SELECTOR, ARENS	1
2	GA5006045	BOLT 1/2" UNF X 1 1/4" GR8 ZP	4
3	GA2700100	DIPSTICK ASSEMBLY SUIT ALLISON 2000 SERIES TRANSMISSION, SHORT	1
4	GA2700101	CLAMP, SUIT DIPSTICK ASSEMBLY ALLISON 2000 SERIES TRANSMISSION, SHORT	1
5	GA2700102	SCREW, SELF TAPPING, SUIT DIPSTICK ASSEMBLY ALLISON 2000 SERIES TRANSMISSION, SHORT	1

Combi Cooler

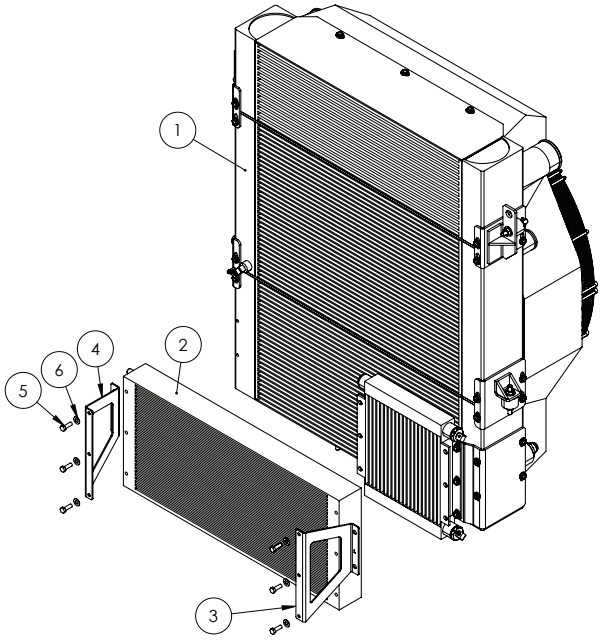

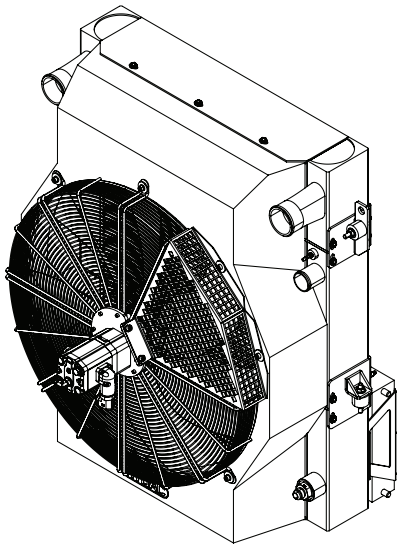

ITEM NO.	PART NUMBER	DESCRIPTION	QTY.
1	GA2700097	ENGINE COOLER, RADIATOR, COMBINATIONAL, G6 MY20, HYDAC INC. MOTOR	1
2	GA5007361	A/C CONDENSER ASSEMBLY, TUBE & FIN, 6 ROW, 5/16" FITTINGS	1
3	GA4501015	PLATE, BRACKET, AC CONDENSOR, LH, SUPER CRUISER	1
4	GA4501020	PLATE, BRACKET, AC CONDENSOR, RH, SUPER CRUISER	1
5	GA5004711	BOLT M8 X 25 GR8.8 ZP	6
6	GA5003643	WASHER 8MM FLAT SS HD	6

Continued over page

Combi Cooler Fittings & Fuel Cooler

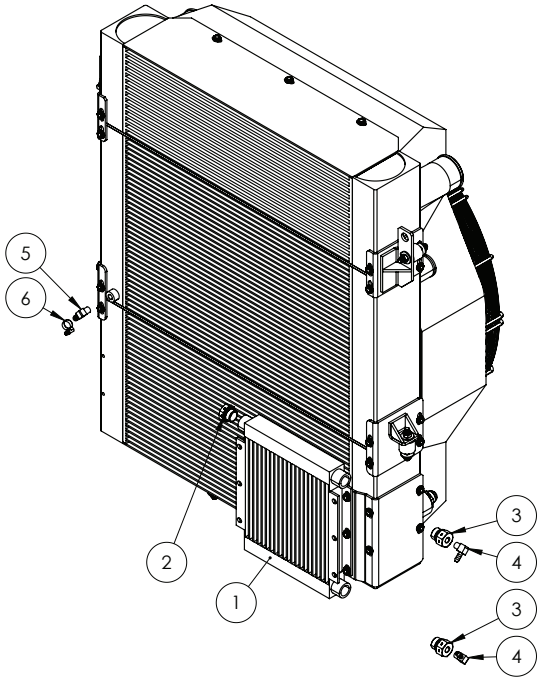

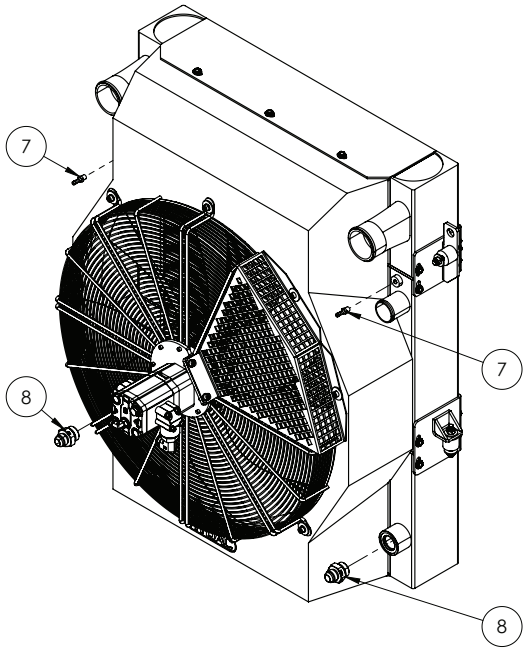

ITEM NO.	PART NUMBER	DESCRIPTION	QTY.
1	GA2700122	FUEL COOLER, G6 MY20, HYDAC	1
2	GA3500302	HYDRAULIC ADAPTOR, PLUG, 3/4” BSPP MALE	1
3	GA3500187	HYDRAULIC ADAPTOR, REDUCING BUSH, 3/4” BSPP MALE X 1/4” BSPP FEMALE	2
4	GA5048565	HOSE BARB, BRASS, ELBOW, 1/4” MALE X 5/16” BARB	2
5	GA5049290	ELBOW 1/4" MALE THREAD X 3/8" BARB BRASS	1
6	GA5004865	HOSE CLAMP, 3/8,SS (8-16/9W)	1
7	GA5020695	HOSETAIL (BRASS) 1/4" X 1/8" MALE THREAD	2
8	GA3500755	HYDRAULIC ADAPTOR, NIPPLE, 1 1/16” JIC MALE X 1 5/16” UN MALE O-RING	2

Combi Cooler Fan Guard

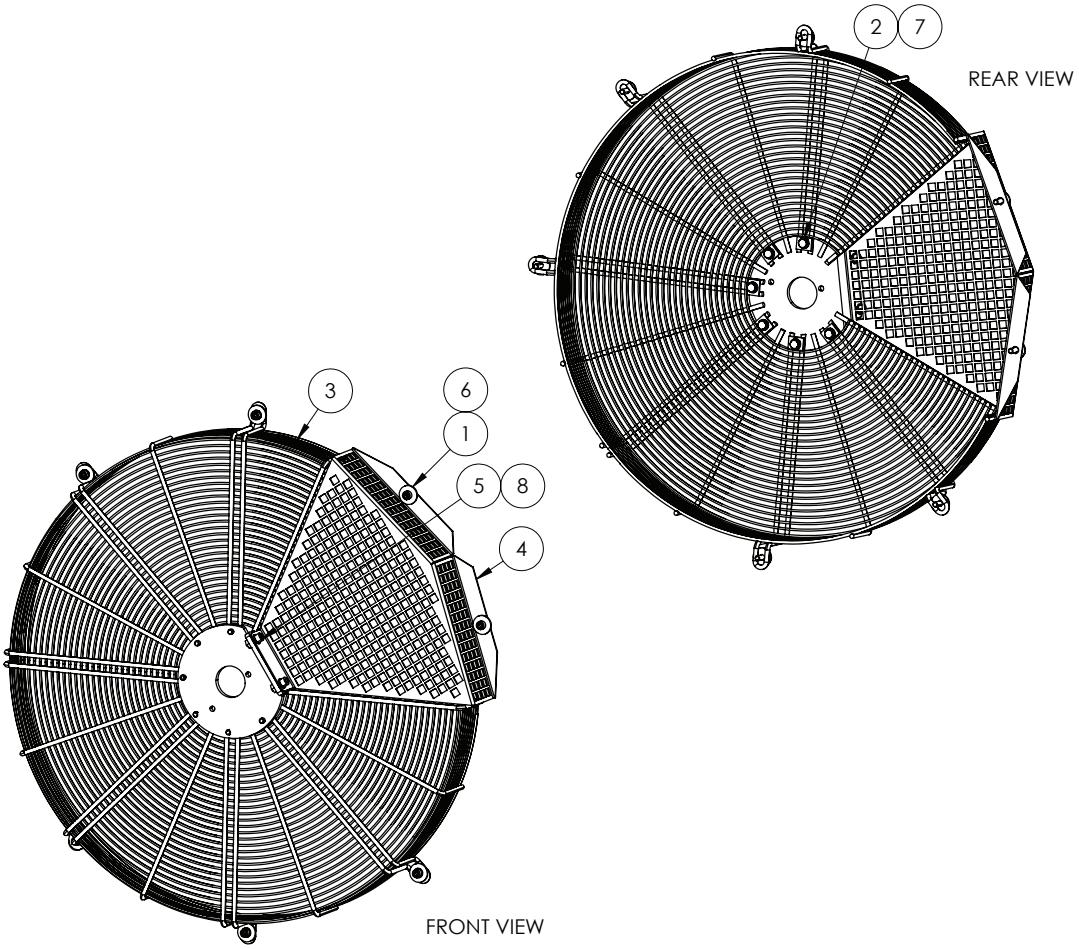

ITEM NO.	PART NUMBER	DESCRIPTION	QTY.
1	GA5076566	ALLEN SCREW M8X25 UNI5931 DACROMET, 180511	8
2	GA5004711	BOLT M8 X 25 GR8.8 ZP	6
3	GA2700160	FAN GUARD, RADIATOR MAIN, G6 S2	1
4	GA2700161	FAN GUARD, RADIATOR, REMOVABLE ACCESS PANEL, G6 S2	1
5	GA5004707	SHCS M8 X 20 GR12.9 ZP	2
6	GA5003643	WASHER 8MM FLAT SS HD	8
7	GA5003651	WASHER 8MM FLAT SS	8
8	GA5004919	WASHER 8MM SPRING SS	2

Combi Cooler Isolators

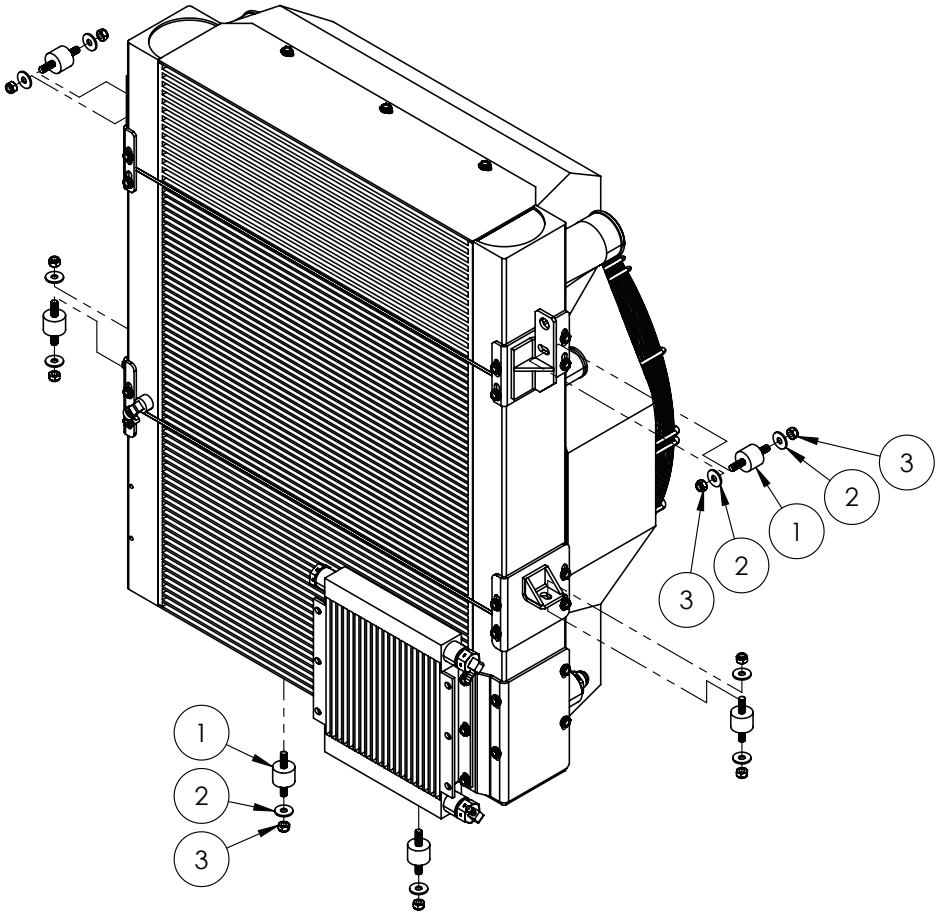

ITEM NO.	PART NUMBER	DESCRIPTION	QTY.
1	GA5069130	ISOLATOR, SANDWICH MOUNT, 28 LONG X 40 MM OD, M10 X 25	6
2	GA5002627	WASHER 3/8" ID X 1 1/8" OD HIGH TENSILE	10
3	GA5000141	NUT M10 NYLOC ZP	10

Combi Cooler Fan Motor

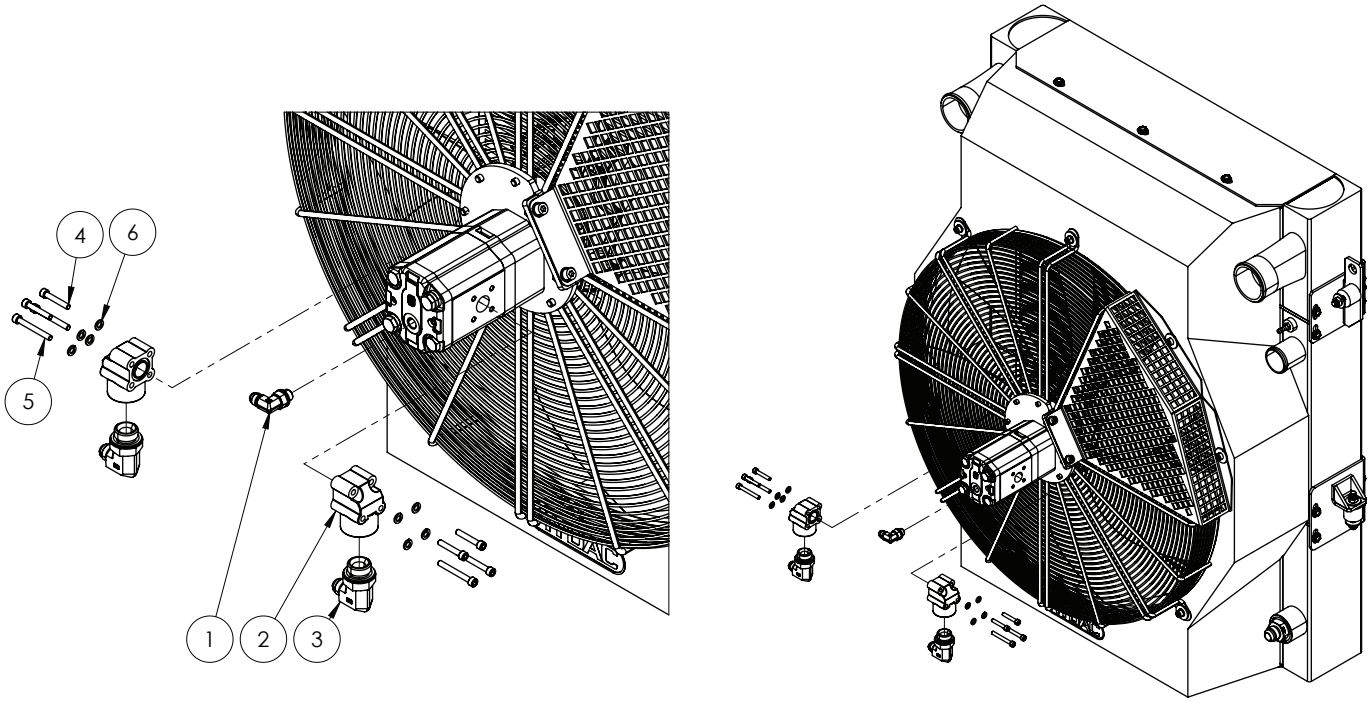

MOTOR & SEALS

PART NUMBER	DESCRIPTION
GA5070840	GEAR MOTOR, HYDRAULIC, GR2 FAN DRIVE
GA5078412	SEAL KIT, SUIT GA5070840, COMBI COOLER HYDRAULIC MOTOR, HYDAC, EXC. SHAFT SEAL
GA3500844	SEAL, MOTOR SHAFT, HYDRAULIC FAN DRIVE MOTOR GA5070840, G6 & G8

ITEM NO.	PART NUMBER	DESCRIPTION	QTY.
1	GA3500734	HYDRAULIC ADAPTER, ELBOW, 90 DEGREE, 9/16” JIC X 1/4” BSPP MALE O-RING	1
2	GA5013231	PORT ADAPTOR, 90 DEGREE, 3/4"	2
3	GA3500733	HYDRAULIC ADAPTOR, ELBOW, 90 DEGREE, 3/4” JIC MALE X 3/4” BSPP MALE O-RING	2
4	GA5011425	SHCS M6 X 35 SS A2-70	4
5	GA5011421	SHCS M6 X 50 GR12.9 ZP	4
6	GA5004447	WASHER 6MM SPRING SS	8

Header Tank Assembly

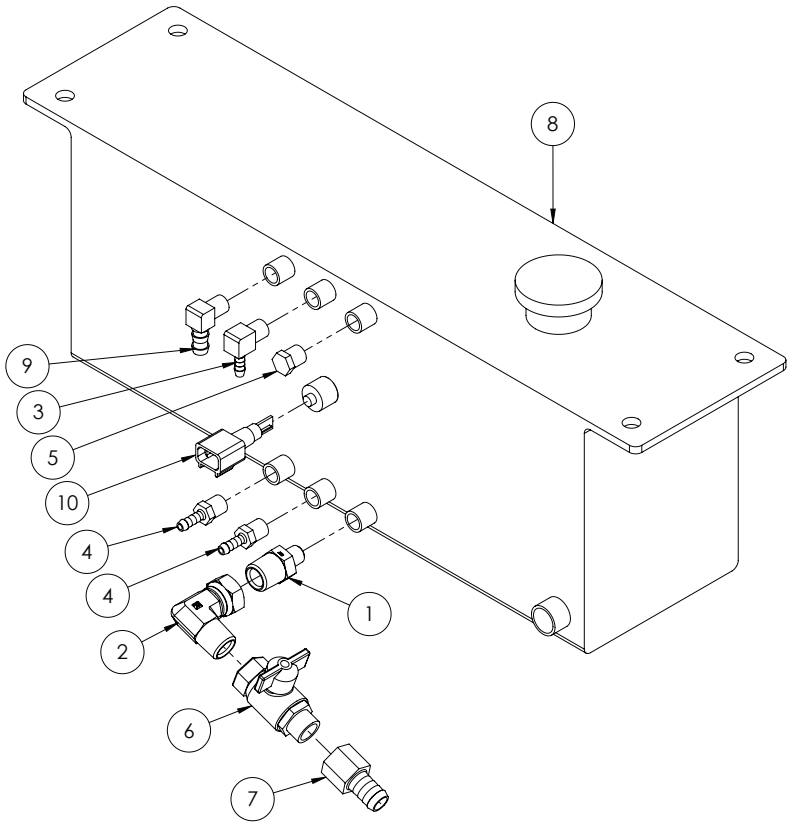

ITEM NO.	PART NUMBER	DESCRIPTION	QTY.
-	GA5025150	RADIATOR CAP,1.2 BAR	-
1	GA3500221	HYDRAULIC ADAPTOR, NIPPLE, 1/2” BSPT MALE X 1/4” BSPT MALE	1
2	GA3500333	HYDRAULIC ADAPTOR, ELBOW, 90 DEGREE, 1/2” BSPT MALE X 1/2” BSPP FEMALE SWIVEL	1
3	GA5048340	ELBOW, 90 DEGREE, 1/4" MALE THREAD X 1/4" HOSE, BRASS	1
4	GA5020540	HOSE BARB, STRAIGHT, 1/4” MALE THREAD X 1/4” HOSE, BRASS	2
5	GA5069335	PLUG, 1/4” BSPT MALE THREAD, BRASS	1
6	GA5020615	VALVE, BALL, 12MM, 1/2” MALE, FEMALE BUTTERFLY, BRASS	1
7	GA5003697	HOSE BARB, 1/2" BSP FEMALE X 5/8" HOSE, BRASS	1
8	GA5069041	HEADER TANK - INCLUDES CAP	1
	GA5025150	RADIATOR CAP,1.2 BAR, G6 G8, HYDAC	-
9	GA5049290	ELBOW 1/4” MALE THREAD X 3/8” BARB BRASS	1
10	GA3000398	SENSOR, LOW COOLANT LEVEL, CUMMINS, SUIT CM2850 ECM	1

Engine Air Divider

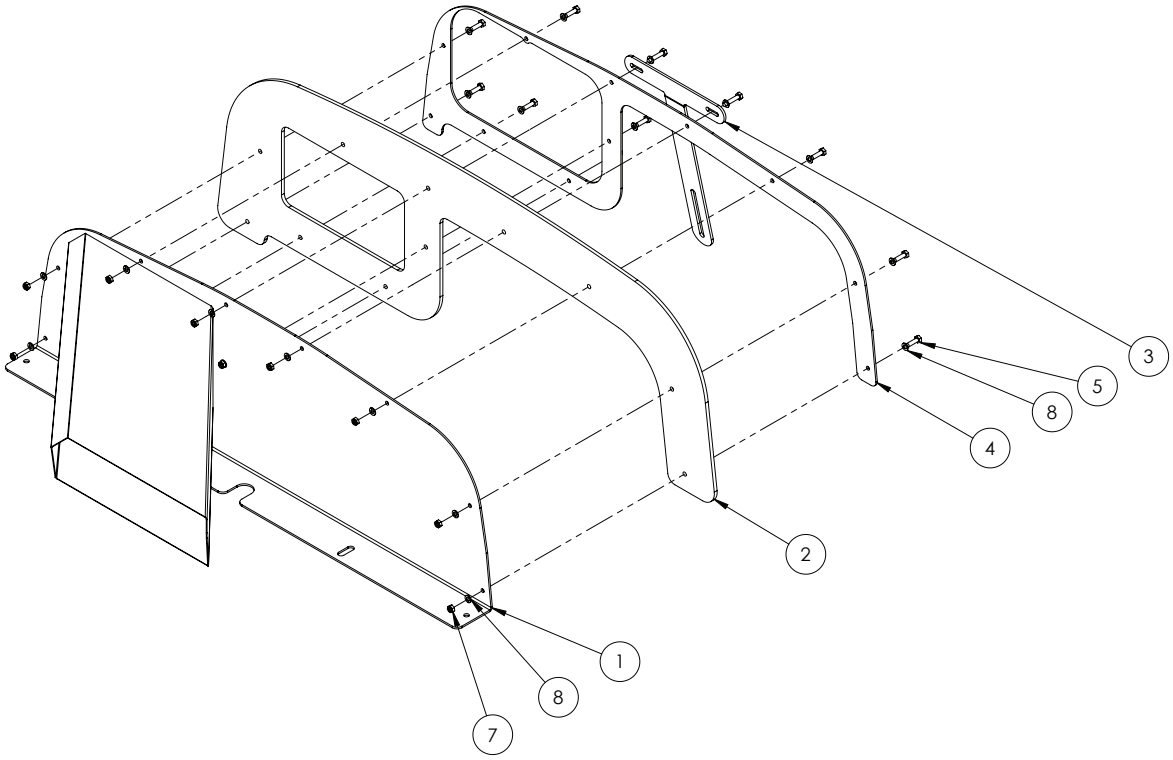

ITEM NO.	PART NUMBER	DESCRIPTION	QTY.
1	GA4660745	RADIATOR INFILL BAFFLE AND INTAKE	1
2	GA4502586	SEAL, RUBBER, RADIATOR INFILL PANEL	1
3	GA4502765	BRACKET UPPER SUPPORT RADIATOR INFILL PANEL	1
4	GA4502626	PLATE, INFILL PANEL CLAMP	1
5	GA5004065	BOLT M6 X 20 GR8.8 ZP	9
6	GA5004077	BOLT M6 X 30 GR8.8 ZP	2
7	GA5048115	NUT M6 NYLOC ZP	11
8	GA5004437	WASHER 6MM FLAT SS	22

Fuel Tank

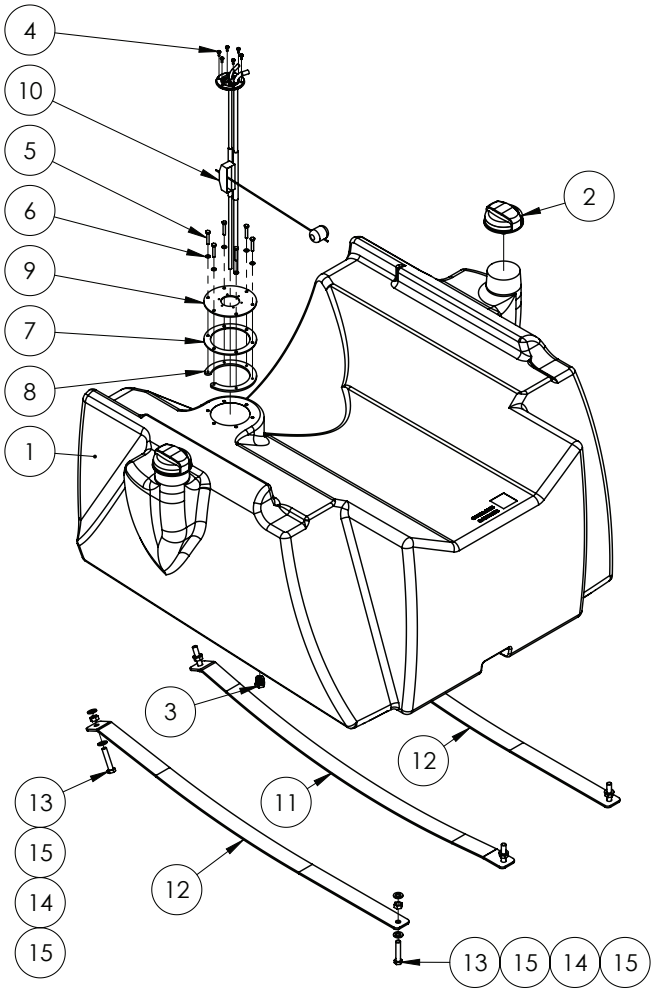

ITEM NO.	PART NUMBER	DESCRIPTION	QTY.
1	GA8500026	TANK, FUEL, G6, MY20	1
2	GA5069066	CAP, FUEL TANK, SP, ANTI-VIBRATION	2
3	GA5048560	PLUG, MAGNETIC, 1/2" BSPT MALE	1
4	GA5011360	BOLT PAN HEAD M4 X 10 SS	6
5	GA5070504	SET SCREW M6 X 35 GR8.8 ZP	6
6	GA5004437	WASHER 6MM FLAT SS	6
7	GA4502635	FUEL SENDER GASKET CORK	1
8	GA4502570	FUEL SENDER MOUNT RETAINING PLATE	1
9	GA4502550	FUEL SENDER MOUNTING PLATE SS	1
10	GA5070420	FUEL SENDER, SUCTION & RETURN TUBES WITH ADJUSTABLE LEVEL FLOAT ADP	1
11	GA4407816	STRAP, FUEL TANK, INNER	1
12	GA4407815	STRAP, FUEL TANK, OUTER	2
13	GA5000329	SET SCREW M12 X 60 GR8.8 ZP	6
14	GA5000559	NUT M12 HEX ZP	6
15	GA5000577	WASHER 12MM FLAT SS HD	12

Fuel Filters

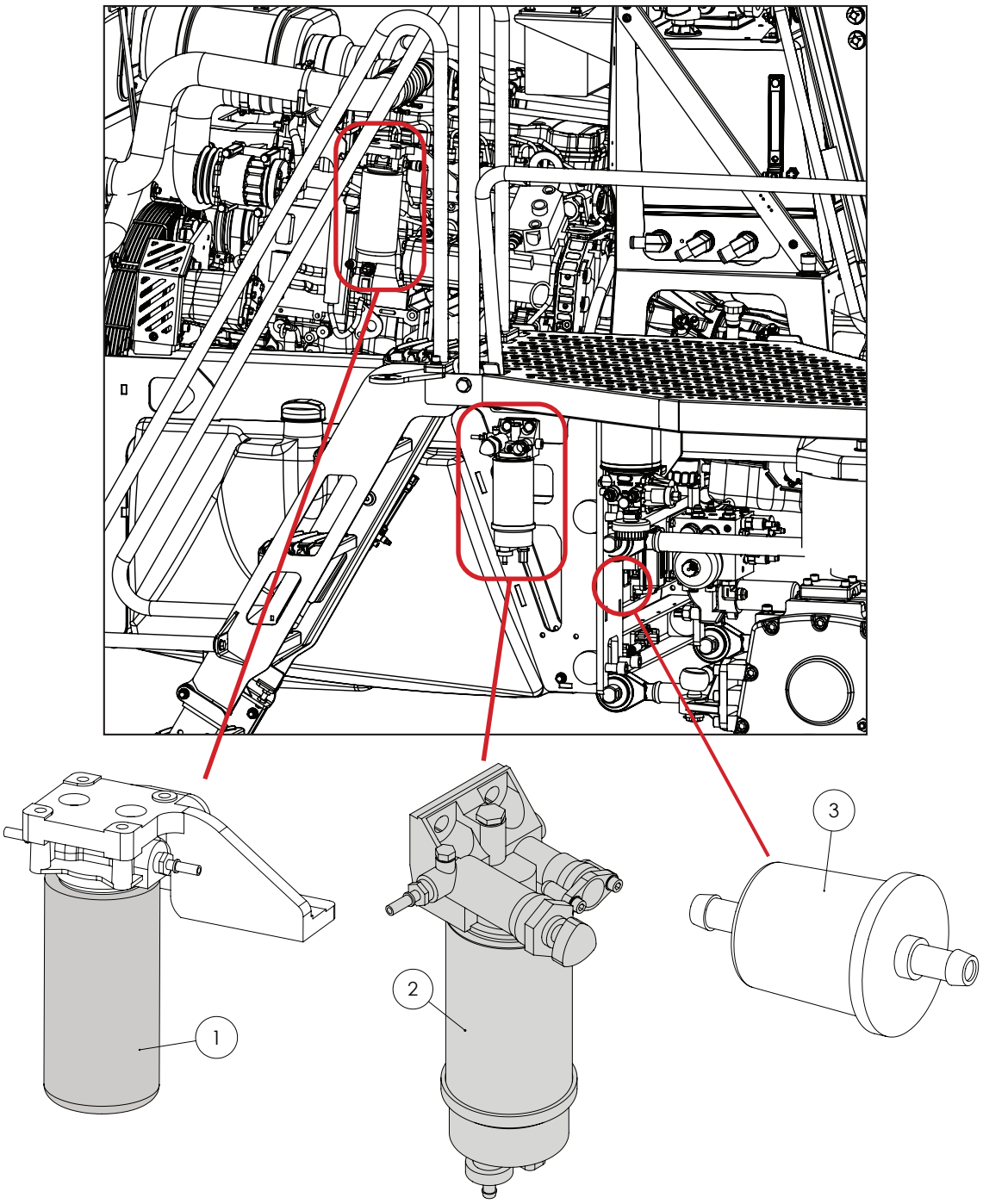

ITEM NO.	PART NUMBER	DESCRIPTION	QTY.
1	GA5051765	FUEL FILTER, SPIN ON, SUIT QSB ENGINE	1
2	GA5071020*	FUEL FILTER ASSEMBLY, PRIMARY, INCLUDES PUMP HEAD, FILTER ELEMENT AND GLASS BOWL	1
3	GA5069895	FUEL FILTER, INLINE, 3/8" MALE HOSE BARBS	1

* Sub-assembly on following pages

Fuel Filter - Primary Assembly

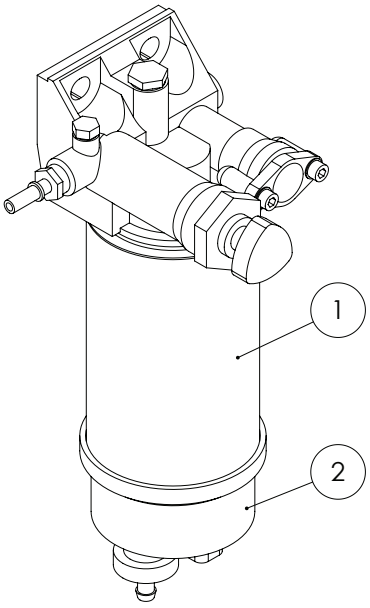

ITEM NO.	PART NUMBER	DESCRIPTION	QTY.
1	GA5051760	FILTER CARTRIDGE, SUIT PRIMARY FUEL FILTER ON SELF PROPELLED WITH QSB	1
2	GA5070560	FUEL FILTER BOWL CLEAR GLASS SUIT PRIMARY, WITH SENSOR	1
-	GA5066275	SENSOR, WATER IN FUEL, SUIT PRIMARY FUEL FILTER WITH GLASS BOWL, DEUTSCH, 3911940S	1

DRIVE LINE, TRANSFER CASE & DIFFERENTIAL

Front Axle - 2WD - Drop Leg

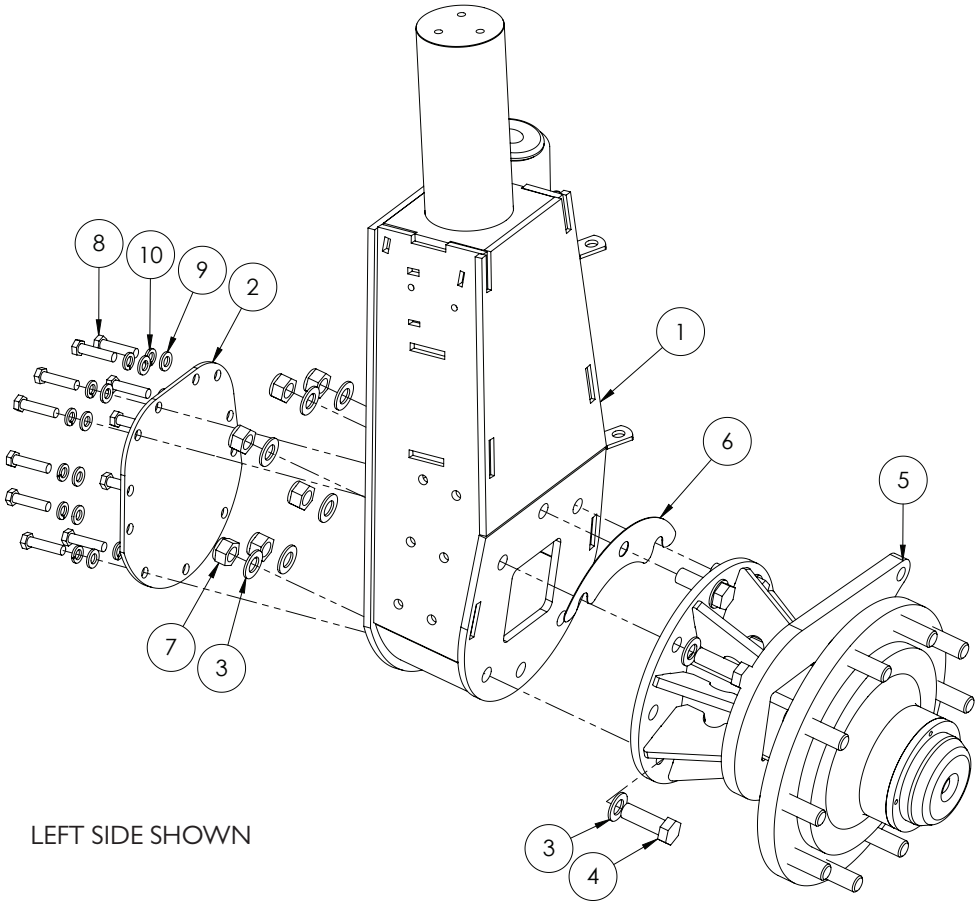

LEFT SIDE SHOWN

ITEM NO.	PART NUMBER	DESCRIPTION	QTY.
1	GA4652541	DROP LEG, FABRICATED, FRONT 2WD LEFT HAND	1
	GA4652546	DROP LEG, FABRICATED, FRONT 2WD RIGHT HAND	
2	2AFA013LAS	ACCESS PLATE	1
3	GA5001741	WASHER 20MM FLAT SS HD	12
4	GA5069220	BOLT M20 X 1.5 PITCH X 60 LONG, GR8.8 ZP	6
5	GA4652800*	HUB, FRONT AXLE, 2WD	1
6	GA4507085	SHIM, 2MM STAINLESS	1
7	GA5001513	NUT M20 X 1.5 PITCH NYLOC ZP	6
8	GA5000305	SET SCREW M12 X 30 GR8.8 ZP	11
9	GA5000577	WASHER 12MM FLAT SS HD	11
10	GA5000575	WASHER 12MM SPRING SS	11

* Sub-assembly on following pages

Quantities shown are per side.

Front Axle - 2WD - Hub

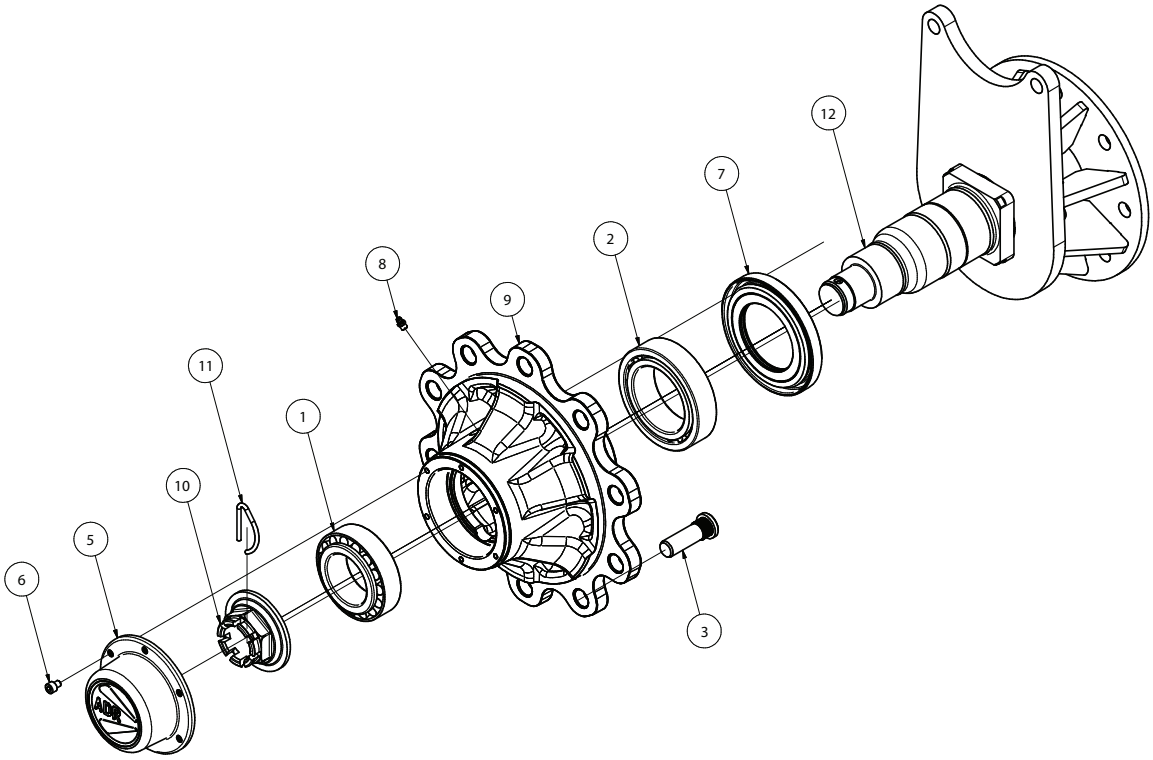

Quantities shown are per side.

ITEM NO.	PART NUMBER	DESCRIPTION	QTY
-	GA4652800	HUB, FRONT AXLE, 2WD, SELF PROPELLED	-
1	GA5024080	BEARING, 33114, 70 X 120 X 37, 100 SERIES, ADR	1
2	GA5024081	BEARING, 33018, 90 X 140 X 39, 100 SERIES, ADR	1
3	GA5052205	STUD WHEEL KIT, M22 X 1.5, 90, 100, 110 SERIES, ADR (SET OF 10)	10
4	GA5018892	WHEEL NUT (NOT SHOWN)	10
5	GA5024083	CAP, WITH GASKET, 100 SERIES, ADR	1
6	GA5024084	SHCS M8 X 1.25P, 100 SERIES, ADR	6
7	GA5024085	SEAL, OIL, STEEL HOUSING, 100 SERIES, ADR	1
8	GA5024086	GREASE NIPPLE, M8 STRAIGHT, 100 SERIES, ADR	1
9	GA5024087	WHEEL HUB, 10 STUD, 335.MM PCD, 100 SERIES, ADR	1
10	GA5024088	CROWN NUT, 100 SERIES, ADR	1
11	GA5024089	SPRING PIN, 100 SERIES, ADR	1
12	GA5024090	STUB AXLE BODY, MOUNT FLANGE, 100 SERIES, ADR	1

Front Axle - 2WD - Steering Cylinder

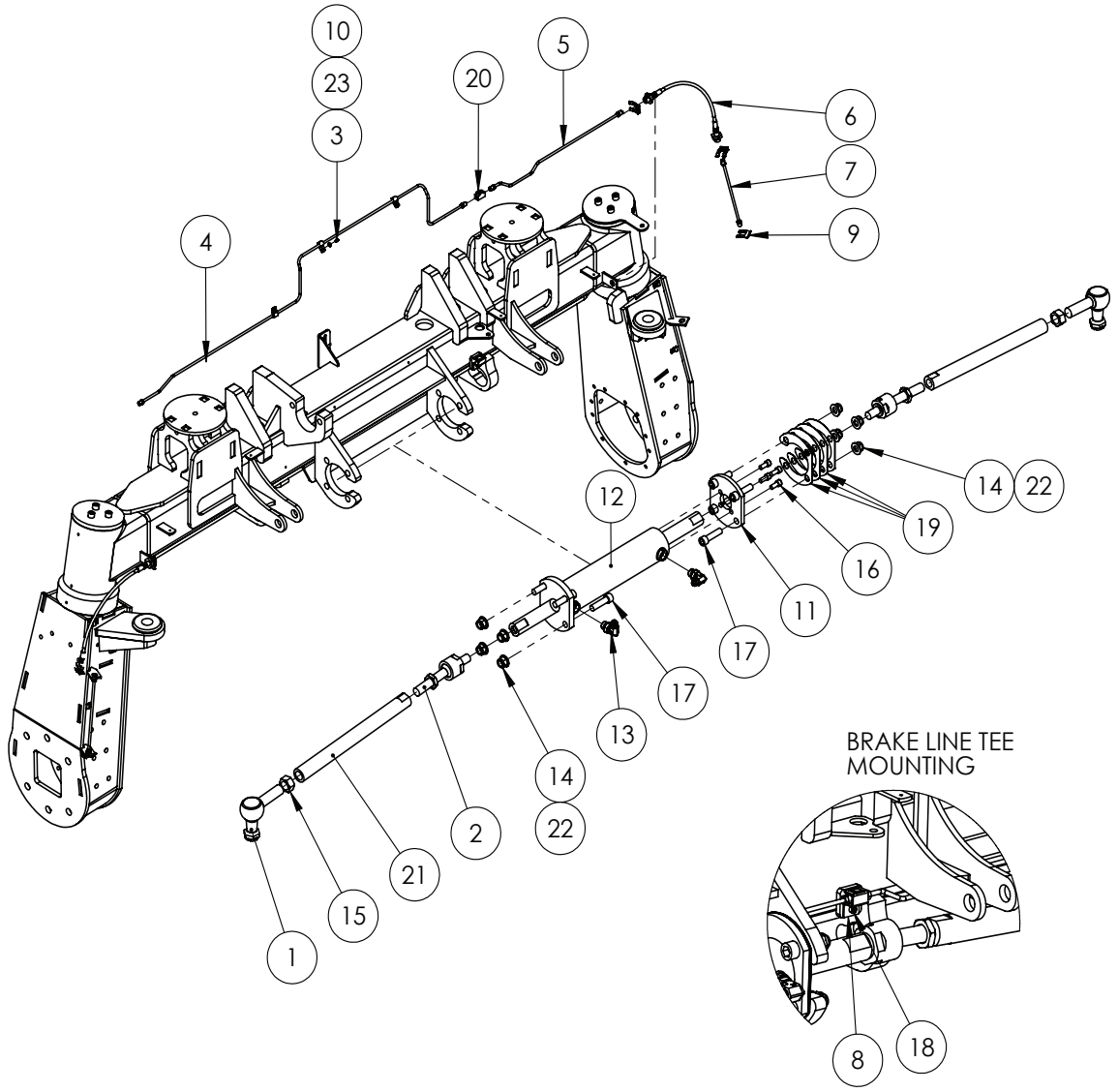

Continues Over Page

Front Axle - 2WD - Steering Cylinder

STEERING SERVICE PART

PART NUMBER	DESCRIPTION
GA5050215	SEAL KIT, TO SUIT 3” STEERING CYLINDER GA5066585, GA5066586, HYPOWER

ITEM NO.	PART NUMBER	DESCRIPTION	QTY.
1	GA5065041	BALL JOINT, RIGHT ANGLE, M28 X 1.5 THREAD	2
2	GA5065045	BALL JOINT, INLINE, M24 X 1.5 PITCH X M22 X 1.5 PITCH	2
3	GA0500166	SCREW, SELF TAP, TORX, PAN HEAD, DIN7500, M4, 8MM, ZP S	3
4	GA4912605	BRAKE HOSE, FRONT AXLE LH, HYDRAULIC OIL, G6 MY20	1
5	GA4912610	BRAKE HOSE, FRONT AXLE RH, HYDRAULIC OIL, G6 MY20	1
6	GA5078571	BRAKE HOSE, FRONT AXLE TO DROPLEG, 470mm LONG, G6 MY20	2
7	GA4912600	BRAKE LINE, FRONT AXLE, DROP LEG, G6 MY20	2
8	HYD002LAS	CLAMP BRACKET, HYDRAULIC FITTING	1
9	GA5010359	CLIP FOR BRAKE HOSE	6
10	GA5007203	CLIP FOR BRAKE LINE 1/4”	3
11	GA4514635	FLANGE PLATE FOR STEERING RAM	1
12	GA5066586	HYDRAULIC CYLINDER, BORE 3”, ROD 1.5”, STROKE 7.5”, STEERING	1
13	GA3500761	HYDRAULIC ADAPTOR, ELBOW, 7/8” UNO TO 3/4” JIC, 90 DEG, S91-1214	2
14	GA5001029	NUT M16 NYLOC ZP	8
15	GA4553195	NUT, M28 X 1.5, 20mm WIDE, ZP	2
16	GA5070250	SHCS 7/16 UNF X 1 GR12.9 ZP	4
17	GA5048680	SHCS M16 X 60 GR12.9 ZP	8
18	GA5004055	SHCS M6 X 20 GR12.9 ZP	1
19	GA4514640	STEERING RAM SHIM PLATE	3
20	GA5008793	TEE, FLARE, 7/16” 24 TPI FEMALE THREAD, SUIT 1/4” TUBE	1
21	GA4583135	TIE ROD 3m MY11	2
22	GA5001043	WASHER 16mm FLAT SS HD	8
23	GA5020510	WASHER 4mm FLAT SS	3
24	GA4000490	STEERING RAM SHIM PLATE 0.5mm	1

Front Axle - 2WD - King Pin Assembly

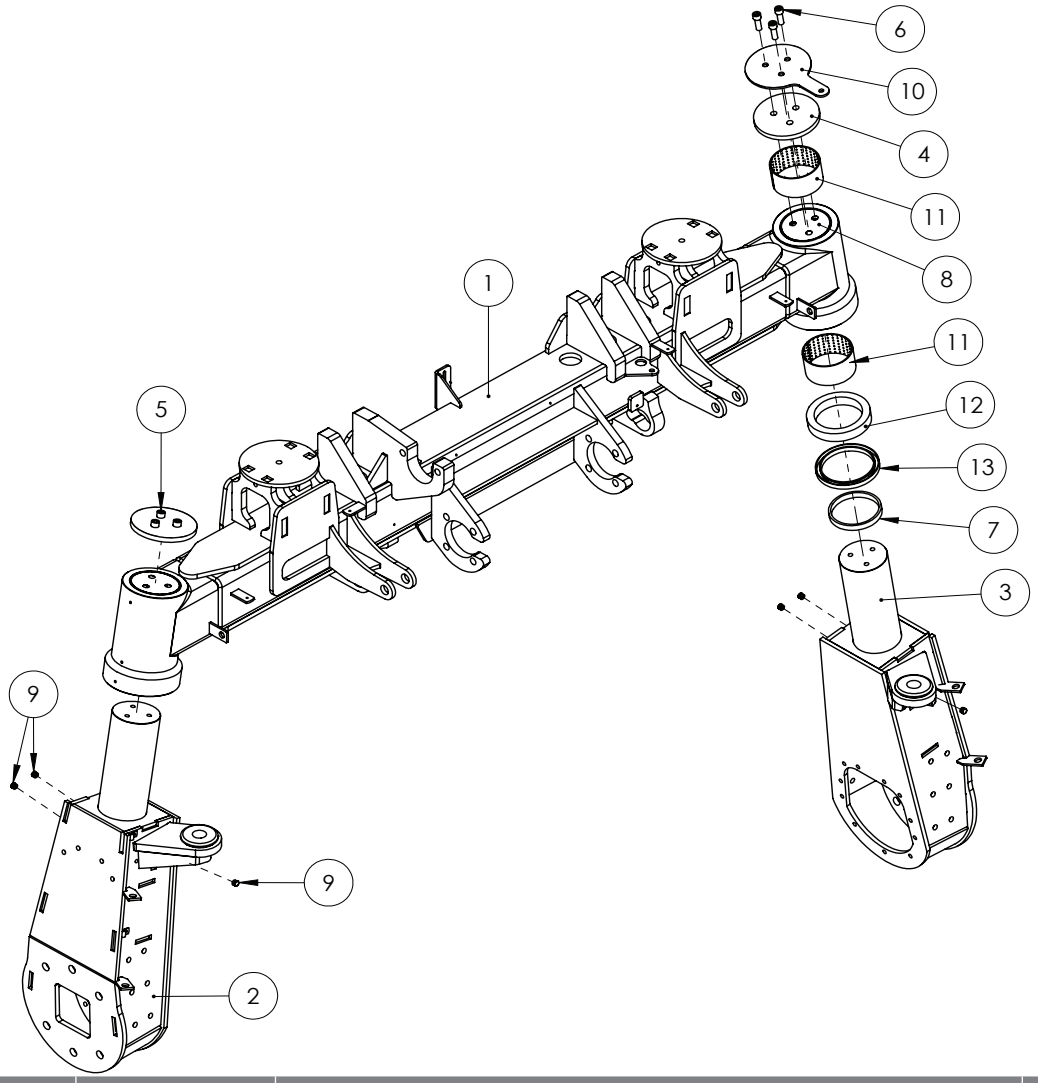

ITEM NO.	PART NUMBER	DESCRIPTION	QTY.
1	GA4602410	AXLE HOUSING, FRONT, 2WD, G6, MY20	1
2	GA4652541	2011 MODEL FRONT LH	1
3	GA4652546	2011 MODEL FRONT RH	1
4	2M-FA011LAS	KING PIN RETAINING CAP, BOLT ON	2
5	GA5000307	SHCS M12 X 30 GR12.9 ZP	3
6	GA5000313	SHCS M12 X 35 GR12.9 ZP	3
7	2MFA004-IGR	SPACER RING/THRUST BEARING MOUNT FOR 2WD FRONT AXLES"	2
8	F70544A	SHIM PLATE FOR 2WD FRONT AXLES	2
9	GA5052905	END CAP, PLASTIC, BLACK, INSERT, ROUND. 10MM, 0.8 - 1.5MM WALL"	6
10	GA4407075	PLATE, STEERING SENSOR ROD MOUNT, 2WD AXLE, G6 MY20"	1
11	GA5009454	GLACIER BUSH - M LINER 110	4
12	GA5048245	BEARING BALL THRUST 51122	2
13	GA5048635	OIL SEAL 145 X 120 X 12	2

Front Axle - 4WD - Steering Cylinder

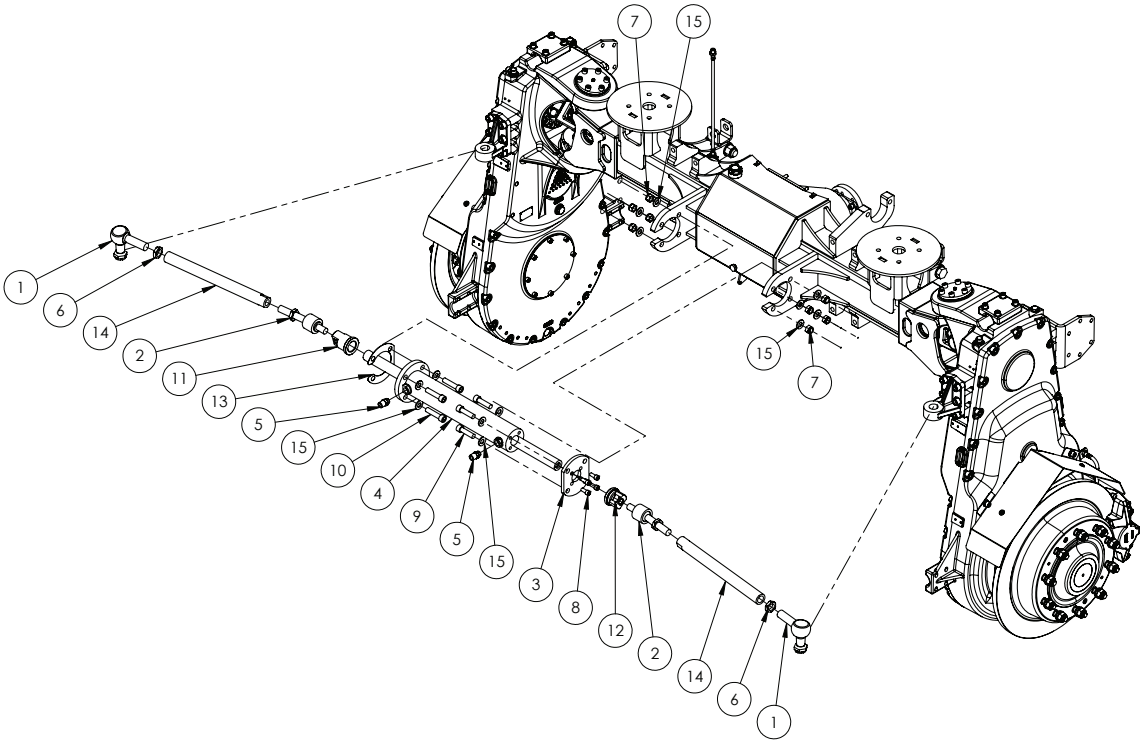

STEERING SERVICE PART

PART NUMBER	DESCRIPTION
GA5050215	SEAL KIT, SUIT 3" STEERING CYLINDER

ITEM NO.	PART NUMBER	DESCRIPTION	QTY.
1	GA5065041	BALL JOINT, RIGHT ANGLE, M28 X 1.5 THREAD	2
2	GA5065045	BALL JOINT, INLINE, M24 X 1.5 PITCH X M22 X 1.5 PITCH	2
3	GA4514635	FLANGE PLATE FOR STEERING RAM	1
4	GA5066587	HYDRAULIC CYLINDER, BORE 3", ROD 1.5", STROKE 331.6MM, STEERING	1
5	GA3500363	HYDRAULIC ADAPTOR, NIPPLE, 1/2" BSPT MALE X 3/4" UNO MALE O-RING, S93-0812	2
6	GA4572170	LOCK NUT, M28 X 1.5, SUIT TIE ROD END	2
7	GA5001029	NUT M16 NYLOC ZP	8
8	GA5070250	SHCS 7/16 UNF X 1 GR12.9 ZP	4
9	GA5048680	SHCS M16 X 60 GR12.9 ZP	4
10	GA5011305	SHCS M16 X 70 GR12.9 ZP	4
11	GA4583280	STEERING STOP, LONG, SELF PROPELLED MY11	1
12	GA4583275	STEERING STOP, SHORT, SUIT SELF PROPELLED MY11	1
13	GA4514640	STEERING RAM SHIM PLATE	1
14	GA4583135	TIE ROD 3M MY11 (450MM LONG)	2
15	GA5001043	WASHER 16MM FLAT SS HD	16

Front Axle - 4WD - Drive & King Pins

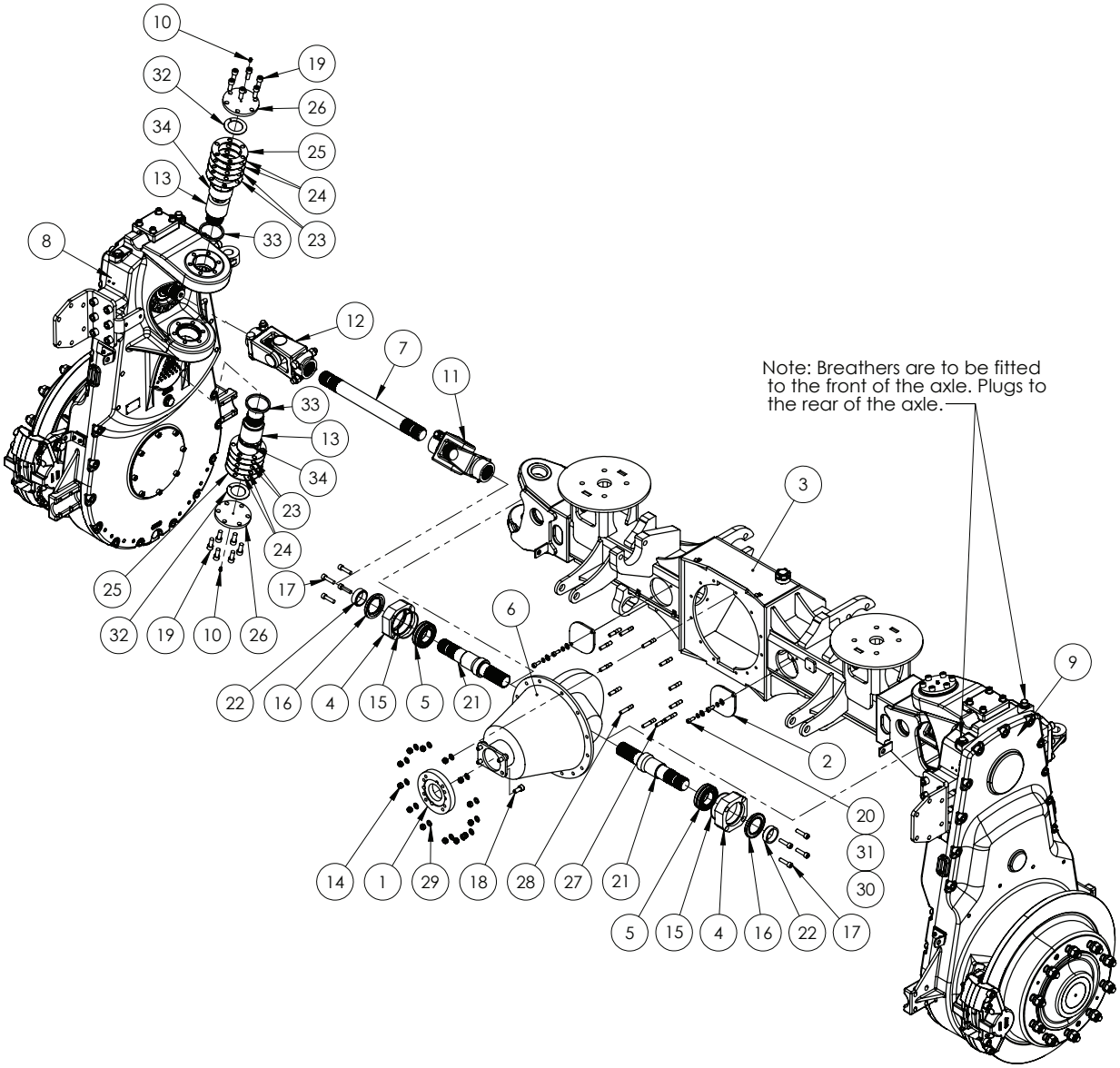

4WD FRONT AXLE SERVICE PARTS

PART NUMBER	DESCRIPTION
GA5051595	UNI CROSS, SUIT 2600 SERIES
GA5007831	SEAL, DIFFERENTIAL PINION INPUT, ISUZU DIFF

ITEM NO.	PART NUMBER	DESCRIPTION	QTY.
1	1480-ISUZU	ADAPTER, 1480 DRIVE SHAFT YOKE TO ISUZU DIFF	1
2	GA4536100	AXLE COVER PLATE, DRIVE SHAFT BOLTS, 4WS 4WD	2
3	GA4602415	AXLE HOUSING, FRONT, 4WD, G6, MY20	1
4	MACH0027	BEARING HOUSING, 85MM, BOLT ON, SUIT DIFF OUTPUT SHAFT ON FABRICATED HOUSING	2
5	GA5007959	BEARING, DOUBLE ROW BARREL ROLLER, DIFF OUTPUT SHAFT. 22209E	2

Continued over page

Front Axle - 4WD - Drive & King Pins

ITEM NO.	PART NUMBER	DESCRIPTION	QTY.
6	GA5010609	DIFF CENTRE ISUZU 5.125:1 RATIO 41/8 TOOTH COUNT 8-97174098-0	1
7	GA5010576	DRIVE SHAFT, DIFF TO DROPLEG, 456MM, 4WD FRONT, MY2011 ON, (JOINT ASSEMBLY'S NOT INCLUDED)	2
8	GA2700085	DROPLEG ASSEMBLY WITH CAST HOUSING, LH, FRONT, 4WD AXLE, G5 G6, DROMOS	1
9	GA2700086	DROPLEG ASSEMBLY WITH CAST HOUSING, RH, FRONT, 4WD AXLE, G6, DROMOS	1
10	GA5012203	GREASE NIPPLE, SHORT, 1/4 UNF, MACH0207	4
11	GA5010651	JOINT ASSEMBLY 2500 SERIES	2
12	GA5010653	JOINT ASSEMBLY 2600 SERIES	2
13	MACH0039	KING PIN, SUIT 4WD AXLE, WAS P/N: "KING PIN"	4
14	GA5000141	NUT M10 NYLOC ZP	13
15	GA5010501	O RING, 89 X 2.5MM, DIFF OUTPUT SHAFT	2
16	GA5048455	OIL SEAL, 55 ID X 85 OD X 8 THICK	2
17	GA5006141	SHCS M10 X 40 GR12.9 ZP	8
18	GA5000297	SHCS M12 X 25 GR12.9 ZP	4
19	GA5000307	SHCS M12 X 30 GR12.9 ZP	24
20	GA5004703	SHCS M8 X 20 GR12.9 ZP	4
21	GA5015157	SHAFT, DIFF OUTPUT, WITH SPACER, 294.10 LONG, SPLINE EACH END	2
22	DL30	SPACER RING, SELF PROPELLED DROP LEG AND DIFF OUTPUT	2
23	STEERSHIM-MK2-0.5MM	STEER SHIM, (0.5MM FMS)	8
24	STEERSHIM-MK2-1MM	STEER SHIM, (1MM FMS), SUIT 4WD	8
25	STEERSHIM-MK2-3MM	STEER SHIM, (3MM FMS)	4
26	DL24	STEERING ASSEMBLY TOP CAP (10MM FMS)	4
27	GA0500024	STUD, M10 X 50 LONG GR8.8	9
28	GA5011177	STUD, M10 X 55 LONG	4
29	GA5000117	WASHER 10MM FLAT SS HD	13
30	GA5003643	WASHER 8MM FLAT SS HD	4
31	GA5004919	WASHER 8MM SPRING SS	4
32	GA5009489	WASHER, GLACIER, 48 ID X 74 OD	4
33	GA5074475	OIL SEAL, 70 X 80 X 10/7MM, 4WD KING PIN, CAST DROPLEG	4
34	GA5009481	GLACIER BUSH, 70 ID X 75 OD X 40 LONG	4

* Sub-assembly on following pages

Front Axle - AWD - Steering Cylinder

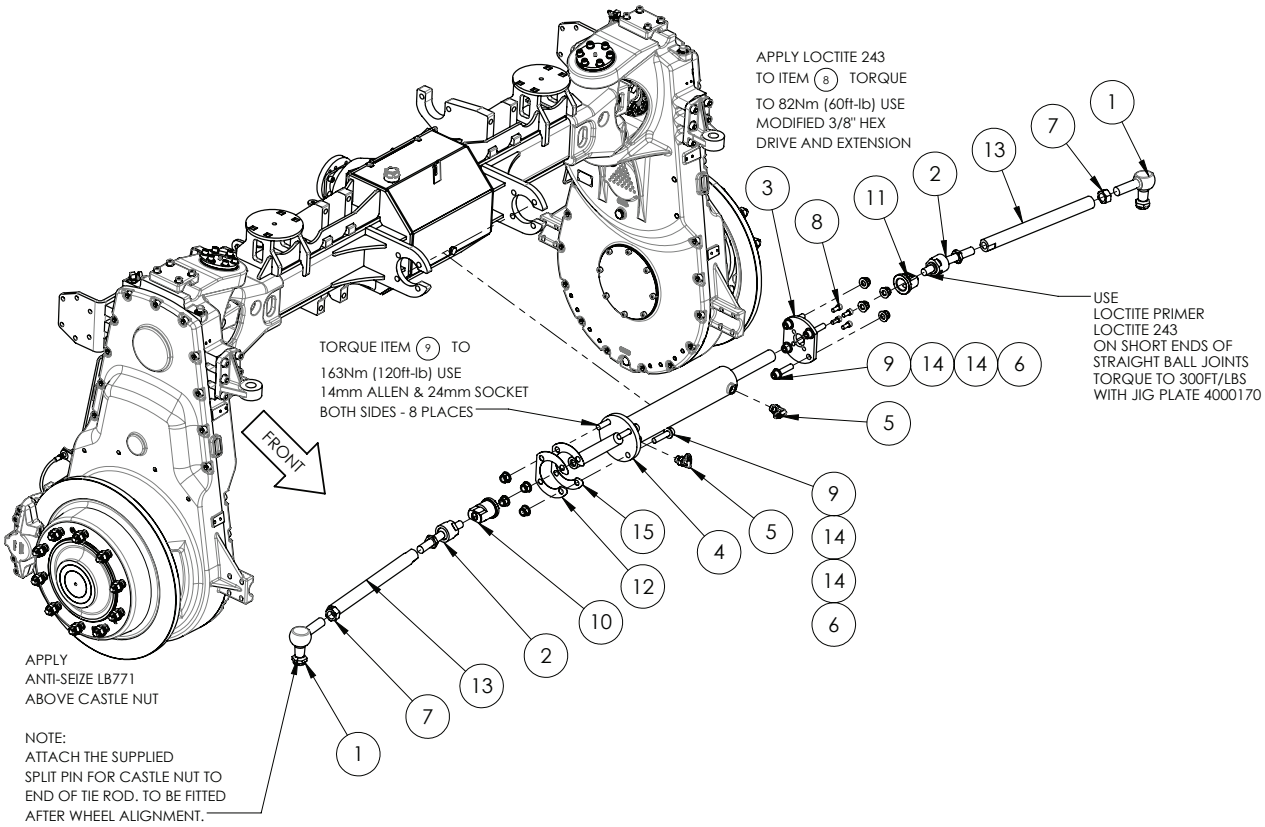

ITEM NO.	PART NUMBER	DESCRIPTION	QTY.
1	GA5065041	BALL JOINT, RIGHT ANGLE, M28X1.5	2
2	GA5065045	BALL JOINT, INLINE, M24 X 1.5 PITCH X M22 X 1.5 PITCH	2
3	GA4514635	FLANGE PLATE FOR STEERING RAM	1
4	GA5066587	HYDRAULIC CYLINDER, BORE 3", ROD 1.5", STROKE 331.6mm, STEERING	1
5	GA3500761	HYDRAULIC ADAPTOR, ELBOW, 7/8" UNO TO 3/4" JIC, 90 DEG, S91-1214	2
6	GA5001029	NUT M16 NYLOC ZP	8
7	GA4553195	NUT, M28 X 1.5, 20mm WIDE, ZP	2
8	GA5070250	SHCS 7/16 UNF X 1 GR12.9 ZP	4
9	GA5011305	SHCS M16 X 70 GR12.9 ZP	8
10	GA4583280	STEERING STOP LONG SP MY11	1
11	GA4583275	STEERING STOP SHORT SP MY11	1
12	GA4514640	STEERING RAM SHIM PLATE	1
13	GA4583135	TIE ROD 3m MY11	2
14	GA5001043	WASHER 16mm FLAT SS HD	16
15	GA4000490	STEERING RAM SHIM PLATE 0.5mm	1

Front Drop Leg 4WD - Lower Assembly

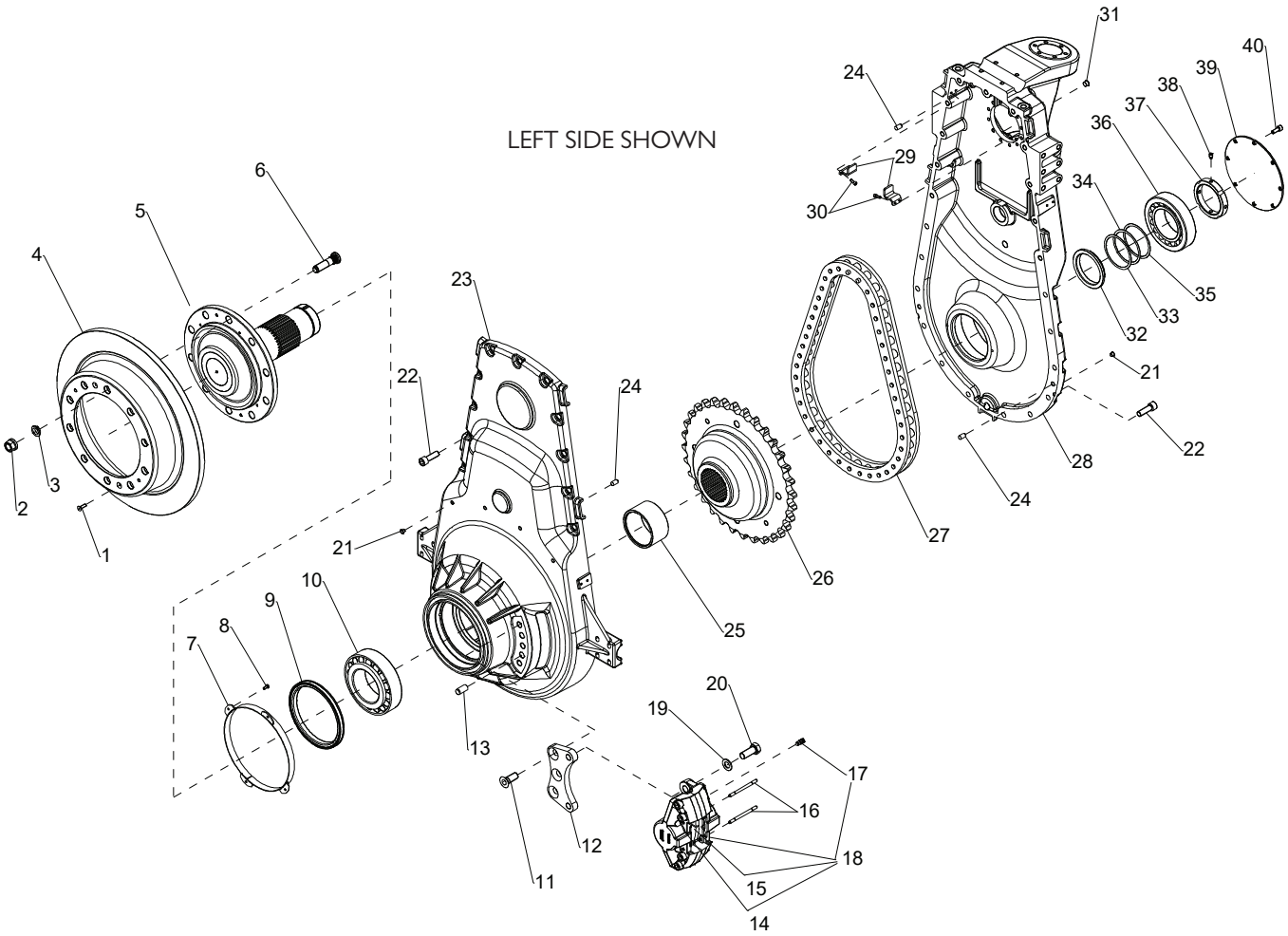

Quantities shown are per side.

ITEM NO.	PART NUMBER	DESCRIPTION	QTY.
1	GA5073260	CSCS, M8 X 25 GR10.9	2
2	001.115.0010.0	STUD NUT M22X1,5 P DIN 74361/B CL. 10	10
3	001.125.0010.0	BEVEL WASHER	10
4	GA5070065	BRAKE DISC, DROP LEG	1
5	GA5073280	SHAFT, OUTPUT, WITH WHEEL HUB, DROP LEG	1
6	GA5072950	STUD M22X1,5X85 CL. 010.9, AXLE	10
7	GA5073285	OUTPUT SHAFT SEAL PROTECTION RING, DROP LEG	1
8	GA5073290	SHCS, M6 X 14, GR8.8	4
9	GA5073295	SEAL, OIL, CASSETTE, T3 190X220X16/18 NBR, DROP LEG	1
10	001.013.0560.0	TAPERED BEARING 32222 TIMKEN	1

Continued over page

Front Drop Leg 4WD - Lower Assembly

ITEM NO.	PART NUMBER	DESCRIPTION	QTY.
11	001.092.0180.0	HEXAG. SOCKET COUNTERSUNK FLAT HEAD CAP SCREW M20X50 UNI 5933 10.9	3
12	GA5073300	PLATE, BRAKE CALIPER MOUNT, DROP LEG	1
13	GA5073305	DOWEL PIN, M18 X 40	2
14	GA2700123	SEAL KIT, HYDRAULIC MINERAL OIL ONLY, SUIT STILFRENI BRAKE CALIPER (1 SET)	1
15	GA5006305	BRAKE PADS, SUIT JCB & STILFRENI CALIPER, 2 PADS = 1 SET	1
16	GA5051430	PIN KIT, SUIT STILFRENI CALIPER (1 SET)	1
17	GA5073310	BLEEDER VALVE, M10X1, BRAKE CALIPER, STILFRENI	1
18	GA2700095	BRAKE CALIPER, 2 X 75MM, HYDRAULIC, MINERAL OIL, STILFRENI, GREEN MARK	1
19	GA5073315	WASHER, FLAT, 21 X 37 X 3, ZP	2
20	GA5073320	SHCS, M20 X 50, FINE THREAD 1.5P, GR10.9	2
21	001.157.0120.0	PLUG	40
22	001.091.0050.0	HEXAGON SOCKET HEAD CAP SCREW M16X50 UNI 5931 12.9	23
23	012.030.2590.1	GEARBOX CASE	1
24	GA5073325	DOWEL PIN, M12 X 24, DROMOS	3
25	GA5073330	SPACER RING, LONG, OUTPUT SHAFT, DROP LEG	1
26	GA5073335	SPROCKET, WITH SPLINED HUB, 32 TOOTH, DROP LEG	1
27	002.650.0020.1	ROLLER CHAIN SUPER 140 H - ANELLO 42 LINK - CHIUSO COD. CA140-SUP-H-1-42L-RP	1
28	012.030.2600.1	GEARBOX COVER	1
29	012.011.0300.1	PROTECTION AGAINST OIL SHAKING	2
30	001.091.0530.0	HEXAGON SOCKET HEAD CAP SCREW M6X16 UNI 5931 12.9	4
31	001.157.0200.0	PLUG	20
32	GA5073345	SPACER RING, SHORT, OUTPUT SHAFT, DROP LEG	1
33	GA5073350	SHIM, OUTPUT SHAFT, 0.15MM, DROP LEG	2
34	GA5073360	SHIM, OUTPUT SHAFT, 0.30MM, DROP LEG	2
35	GA5073355	SHIM, OUTPUT SHAFT, 0.XXMM, DROP LEG	4
36	001.013.1080.0	TAPERED BEARING 32220	1
37	GA5073365	RING NUT, DROP LEG, REAR	1
38	GA5073370	GRUB SCREW, M10 X 16, DROMOS	1
39	GA5073375	PLATE, COVER, OUTPUT SHAFT, DROP LEG, REAR, G5 G6, DROMOS	1
40	001.091.0260.0	HEXAGON SOCKET HEAD CAP SCREW M10X25 UNI 5931 12.9	8

Quantities shown are per side.

Front Drop Leg 4WD - Upper Assembly

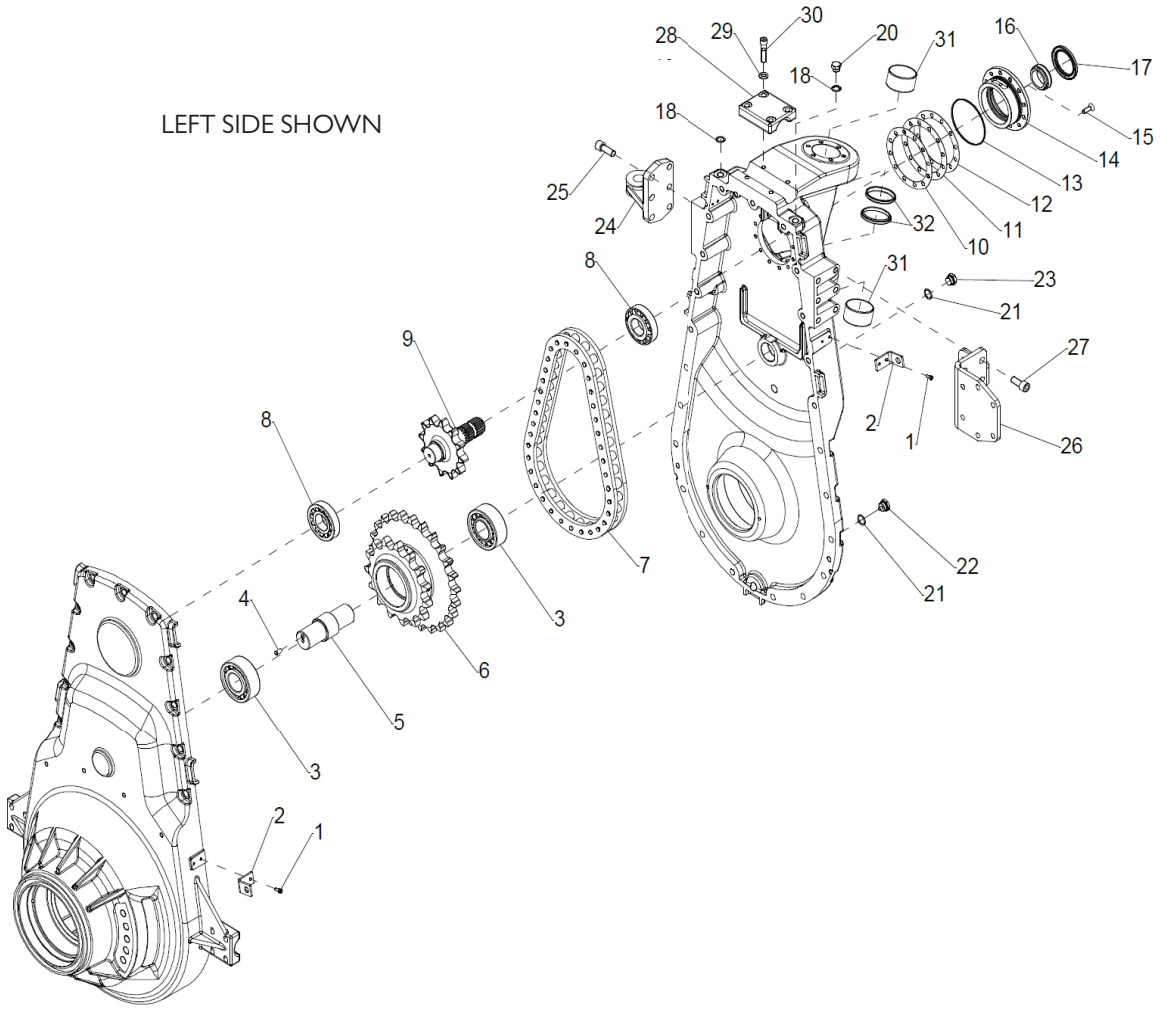

Quantities shown are per side.

ITEM NO.	PART NUMBER	DESCRIPTION	QTY.
1	001.091.1170.0	HEXAGON SOCKET HEAD CAP SCREW M6X14 UNI 5931 12.9	4
2	012.011.0660.1	BRAKE HOSE FIXING PLATE	2
3	001.010.0590.0	CYLINDRICAL ROLLER BEARING SINGLE ROW NJ2310 ET2X	2
4	GA5026145	PARALLEL PIN A 10X20 UNI EN ISO 8734	1
5	GA5073385	IDLER SHAFT, DROP LEG	1
6	012.257.0020.1	DOUBLE SPROCKET	1
7	002.650.0030.1	ROLLER CHAIN SUPER 120 H - ANELLO 36 LINK - CHIUSO COD. CA120-SUP-H-1-36L-RP	1
8	001.013.0180.0	TAPERED BEARING 30309	2

Continued over page

Front Drop Leg 4WD - Upper Assembly

ITEM NO.	PART NUMBER	DESCRIPTION	QTY.
9	012.257.0040.1	SPLINED SHAFT WITH SPROCKET	1
10	GA5073400	SHIM, INPUT SHAFT BEARING HOLDER, 0.30MM, DROP LEG	2
11	GA5073395	SHIM, INPUT SHAFT BEARING HOLDER, 0.20MM, DROP LEG	4
12	GA5073390	SHIM, INPUT SHAFT BEARING HOLDER, 0.15MM, DROP LEG	2
13	GA5073405	O-RING, 2-158 - 120.32 X 2.62 NBR 70	1
14	012.140.0600.1	BEARING SUPPORT BUSH	1
15	001.092.0100.0	HEXAG. SOCKET COUNTERSUNK FLAT HEAD CAP SCREW M10X30 UNI 5933 10.9	12
16	012.321.0710.1	OIL SEAL RING RACE	1
17	GA5073420	OIL SEAL, 65 X 90 X 7 MM, INPUT SHAFT, DROP LEG	1
18	GA5073430	WASHER, COPPER GASKET, 18 X 24 X 1.5 MM	2
20	001.151.0380.0	FILLING PLUG HEXAGONAL HEAD M18X1,5 COD. 1MTCO30A - MOD. TC3M	1
21	GA5073435	WASHER, COPPER GASKET, 22 X 28 X 1.5 MM	2
22	GA5073445	PLUG, DRAIN, MAGNETIC, M22 X 1.5, DROP LEG	1
23	GA5078486	FILL PLUG, M22 X 1.5, DROMOS	1
24	GA5078860	LEFT CONTROL LEVER, FRONT DROP LEG, 4WD, G6, 012.340.0880.1	1
	GA5078861	RIGHT CONTROL LEVER, FRONT DROP LEG, 4WD, G6, 012.340.0870.1	1
25	001.091.0030.0	HEXAGON SOCKET HEAD CAP SCREW M16X40 UNI 5931 12.9	6
26	012.011.0650.1	PLATE	1
27	GA5000935	SHCS M16 X 50 GR12.9 ZP	6
28	012.011.0310.1	PLATE	1
29	001.120.0030.0	FLAT WASHER 13X24X2,5 ISO 7089 - HV 200	4
30	GA5056215	HEXAGON SOCKET HEAD CAP SCREW, M12X55, UNI 5931 12.9, DROMOS, 001.091.0690.0	4
31	001.040.0280.0	BUSHING PCM707540M SKF	2
32	GA5074475	OIL SEAL, 70 X 80 X 10/7MM, 4WD KING PIN, CAST DROPLEG	2

Front Axle - Remote Breathers

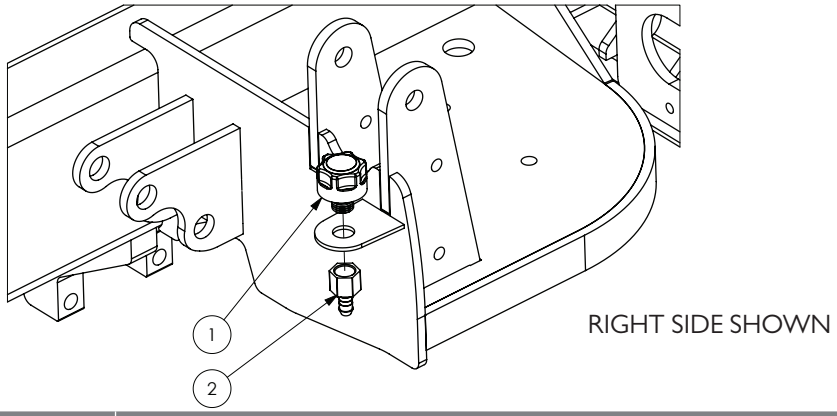

ITEM NO.	PART NUMBER	DESCRIPTION	QTY.
1	GA5066770	AIR BREATHER SCREW IN STYLE 1/2"	2
2	GA5052700	HOSE BARB, 1/2” BSP FEMALE X 1/2” HOSE, BRASS	2

Front Axle - Steering Sensor 2WD

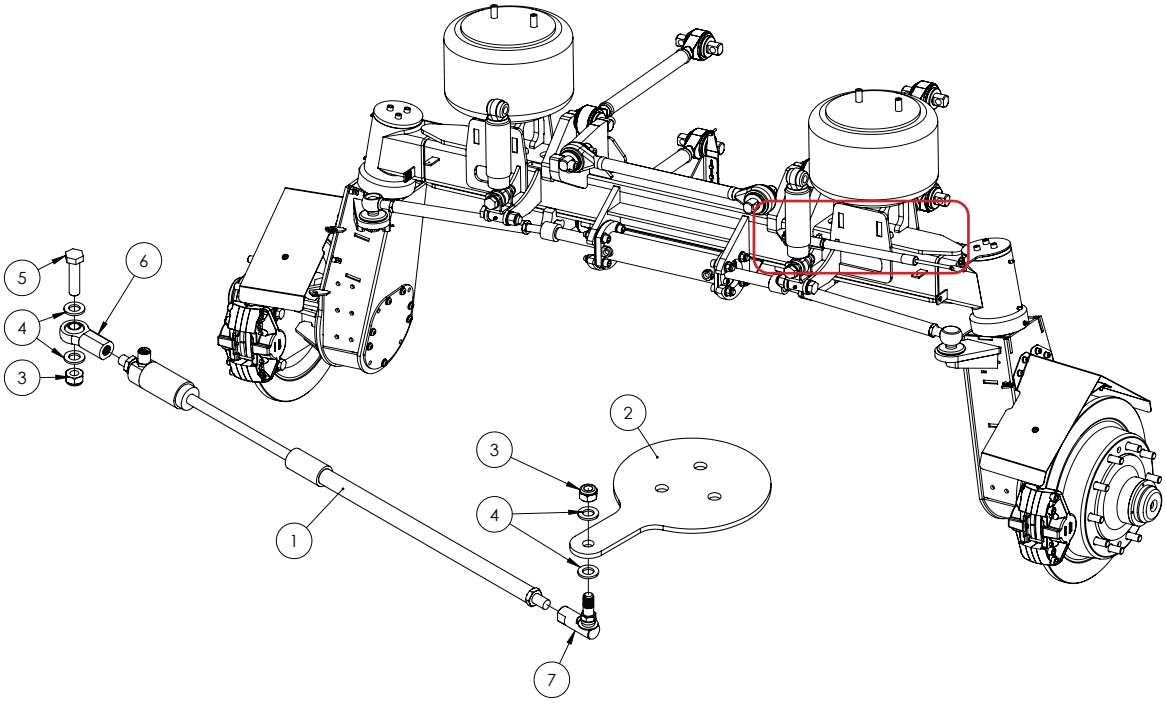

ITEM NO.	PART NUMBER	DESCRIPTION	QTY.
1	GA3000144	SENSOR, LINEAR NON CONTACT, STEERING, 250MM, RAVEN	1
2	GA4407075	PLATE, STEERING SENSOR ROD MOUNT, 2WD AXLE	1
3	GA5000141	NUT M10 NYLOC ZP	2
4	GA5000117	WASHER 10MM FLAT SS HD	4
5	GA5006055	BOLT M10 X 40 GR8.8 ZP	1
6	GA3000145	ROSE END, M10 SUIT GA3000144, RAVEN	1
7	GA3000146	STUD END, M10 SUIT GA3000144, RAVEN	1

Front Axle - Steering Sensor 4WD

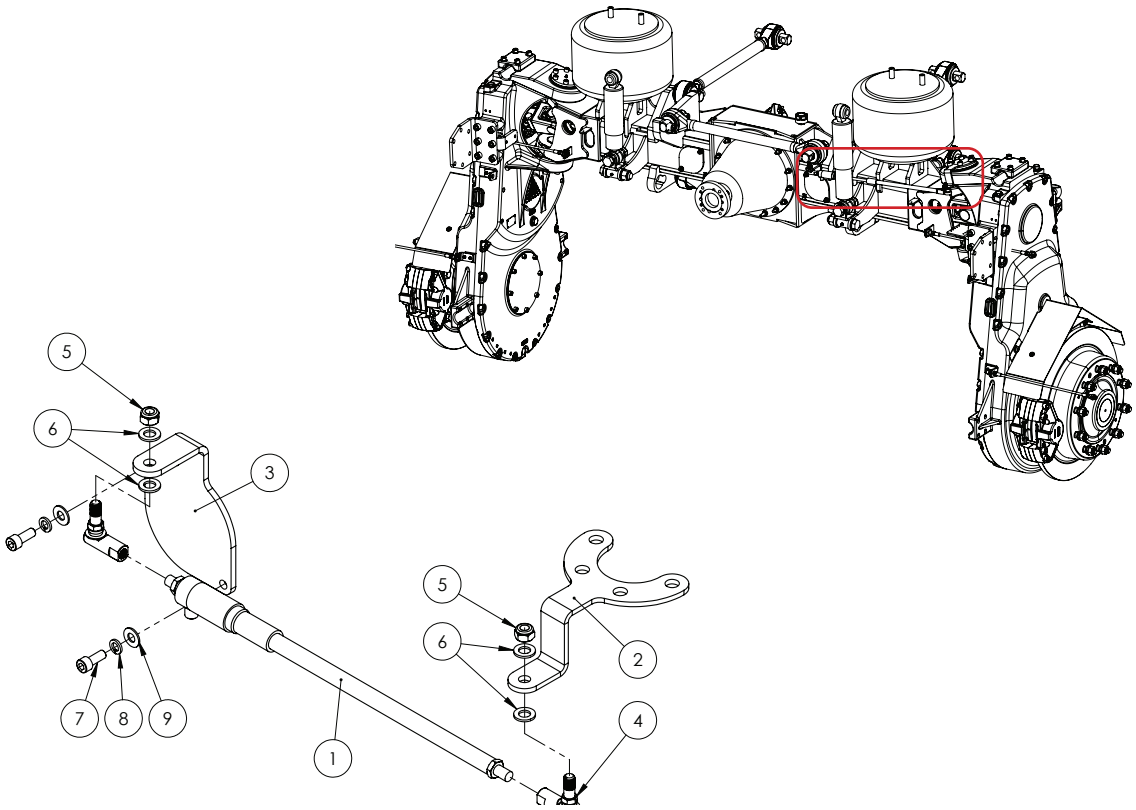

ITEM NO.	PART NUMBER	DESCRIPTION	QTY.
1	GA3000144	SENSOR, LINEAR NON CONTACT, STEERING, 250MM, RAVEN	1
2	GA4407085	PLATE, STEERING SENSOR ROD MOUNT, 4WD AXLE	1
3	GA4407080	PLATE, STEERING SENSOR BASE MOUNT, 4WD AXLE	1
4	GA3000146	STUD END, M10 SUIT GA3000144, RAVEN	2
5	GA5000141	NUT M10 NYLOC ZP	2
6	GA5000117	WASHER 10MM FLAT SS HD	4
7	GA5004703	SHCS M8 X 20 GR12.9 ZP	2
8	GA5004919	WASHER 8MM SPRING SS	2
9	GA5003643	WASHER 8MM FLAT SS HD	2

Continued over page

Suspension - Front

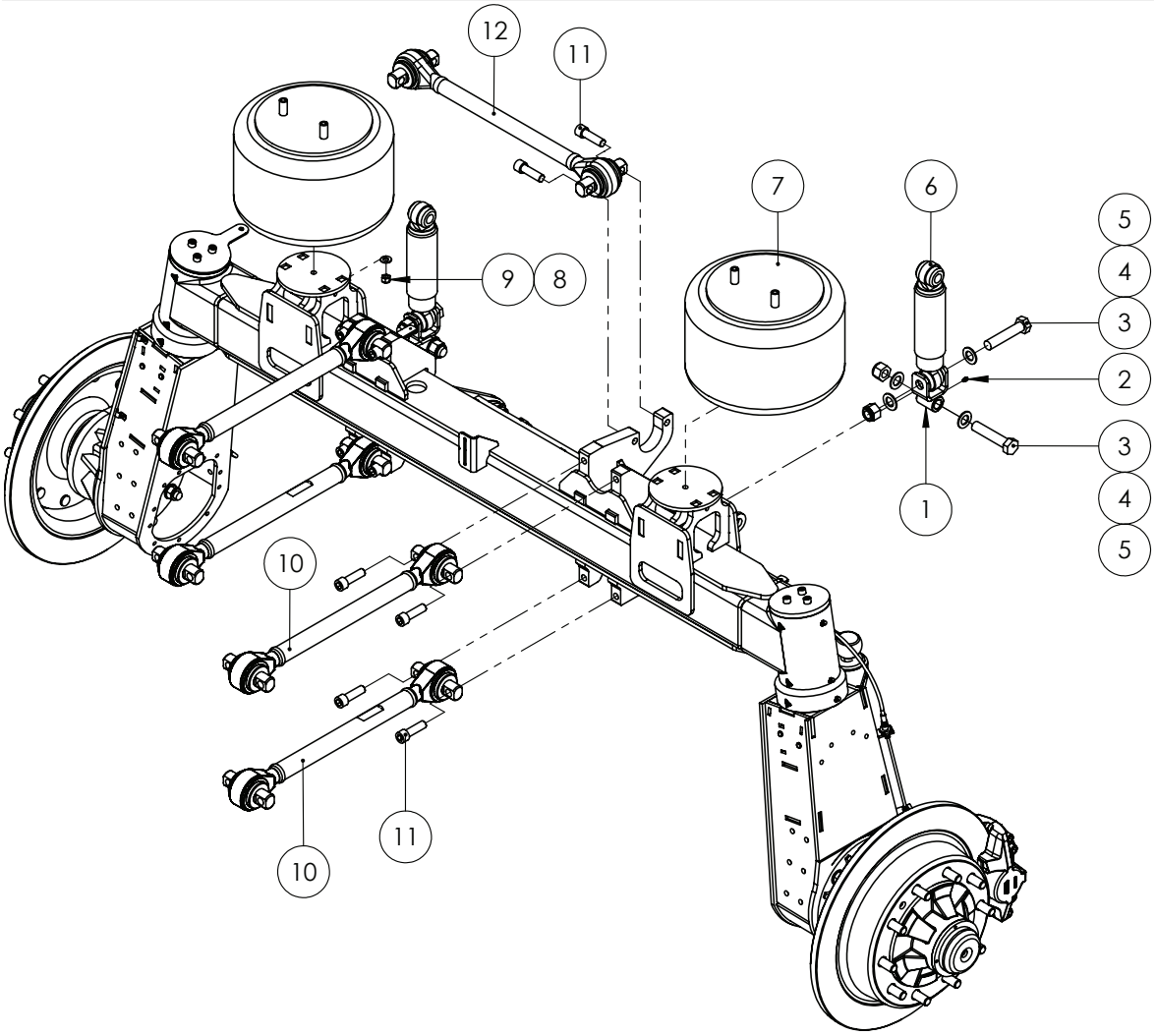

ITEM NO.	PART NUMBER	DESCRIPTION	QTY.
1	GA4660670	SHOCK ABSORBER MOUNT, FRONT AXLE, SELF PROPELLED	2
2	GA5050450	GREASE NIPPLE, 6MM	2
3	GA5011346	BOLT M24 X 115 GR8.8 ZP SPECIAL 75 TO 77MM SHANK	4
4	GA5001891	WASHER 24MM FLAT HD SS	8
5	GA5012469	NUT M24 NYLOC ZP	4
6	GA2500000	SHOCK ABSORBER, SUSPENSION DAMPER, BLACK, MONROE	2
7	GA5005115	AIR SPRING AA300 DUAL AIR STUD	2
8	GA5017673	WASHER 1/2" HIGH TENSILE	2
9	GA5050580	NUT 1/2 UNC NYLOC ZP	2
10	GA5068851	SUSPENSION LINK, TORQUE ROD, 650MM CENTRE, SOLID	4
11	GA5053145	SHCS 3/4 UNF X 2 1/2 GR12.9 ZP BLUE	10
12	GA5068850	SUSPENSION LINK, TORQUE ROD, 650MM CENTRE, HOLLOW,	1

3-4m Front Adjustable Axle - Dropleg

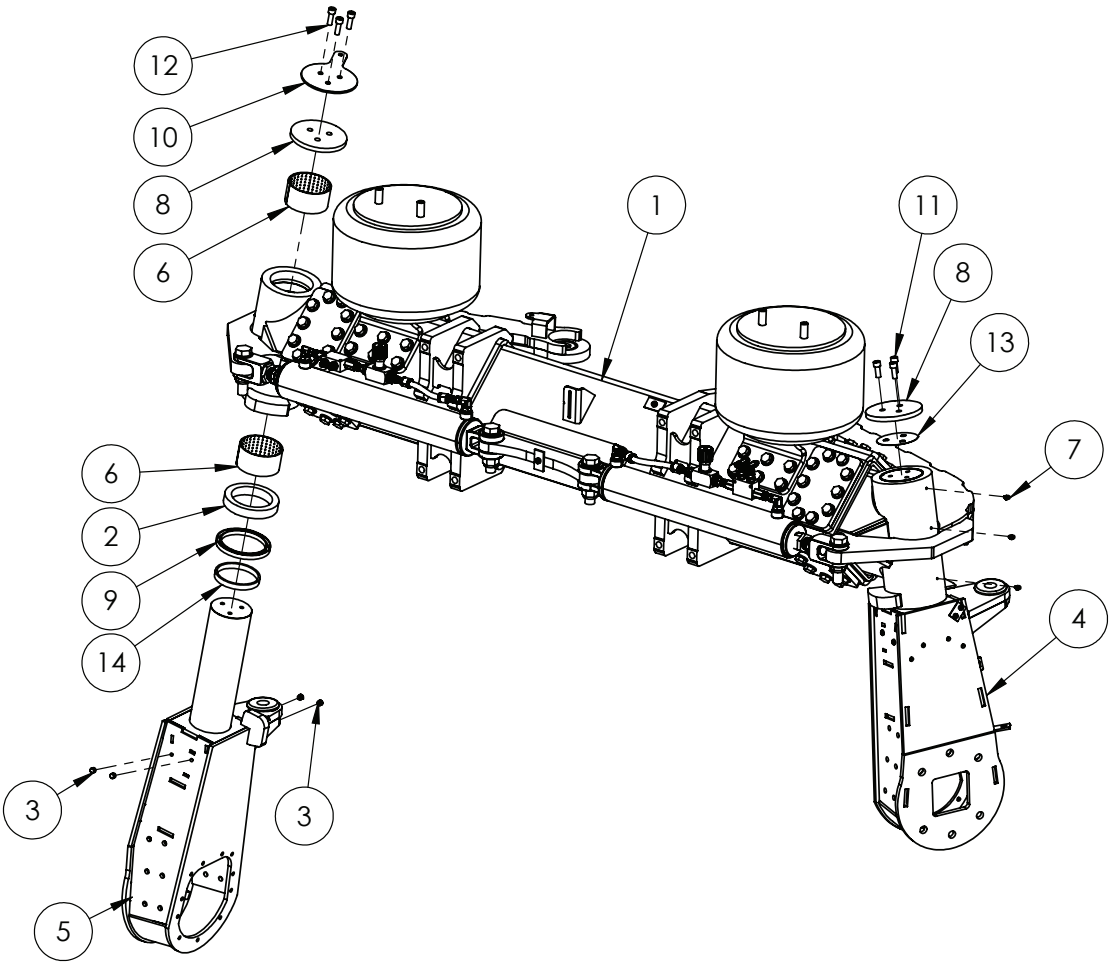

ITEM NO.	PART NUMBER	DESCRIPTION	QTY.
1	*	ASSEMBLY DRAWING ONLY, AXLE SUB ASSY	1
2	GA5048245	BEARING BALL THRUST 51122	2
3	GA5052905	END CAP, PLASTIC, BLACK, INSERT, ROUND. 10MM, 0.8 - 1.5MM WALL	8
4	GA4603785	FRONT DROPLEG HOUSING LH 3-4M ADJUSTABLE MY21	1
5	GA4603780	FRONT DROPLEG HOUSING RH 3-4M ADJUSTABLE MY21	1
6	GA5009454	GLACIER BUSH - M LINER 110	4
7	GA5070000	GREASE FITTING HEADER BLOCK 6 WAY, INC. 6MM LINE ADAPTORS AND STRAIGHT GREASE NIPPLES AND PLUGS	6
8	2M-FA011LAS	KING PIN RETAINING CAP, BOLT ON	2
9	GA5048635	OIL SEAL, 120 ID X 145 OD X 10 THICK	2
10	GA4411045	PLATE, STEERING SENSOR ROD MOUNT, 3-4M ADJUSTABLE, G6, MY21	1
11	GA5000307	SHCS M12 X 30 GR12.9 ZP	3
12	GA5000313	SHCS M12 X 35 GR12.9 ZP	3
13	F70544A	SHIM, 0.5MM THICK, SUIT CROP CRUISER KING PIN CAP	1
14	2MFA004-IGR	THRUST RING, SUIT CROP CRUISER AXLE	2

3-4m Front Adjustable Axle - Hub & Brake

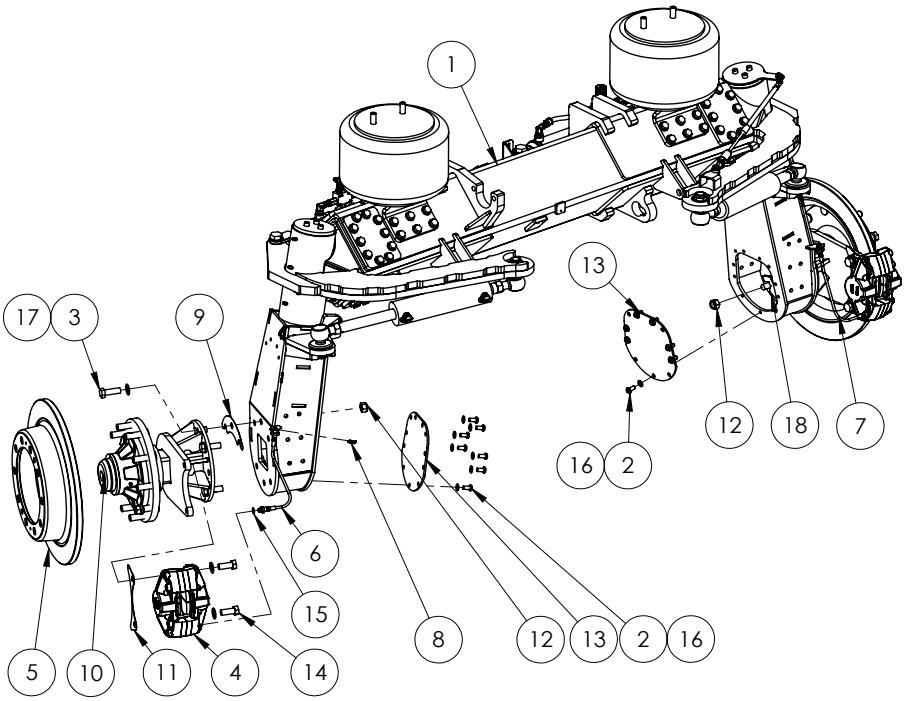

ITEM NO.	PART NUMBER	DESCRIPTION	QTY.
1	*	ASSEMBLY DRAWING ONLY, FRONT AXLE SUB ASSEMBLY	1
2	GA5000291	BHCS M12 X 25 SS A2-70	14
3	GA5069220	BOLT M20 X 1.5P X 60 GR8.8 ZP	12
4	GA2700095	BRAKE CALIPER, 2 X 75MM, HYDRAULIC, MINERAL OIL, STILFRENI, GREEN MARK	2
5	GA5070065	BRAKE DISC ROTOR, CAST, 335MM PCD, 600MM OD, 282MM CENTRE BORE, CROP CRUISER MY11 ON, SUPER CRUISER, MY08 - MY10	2
6	GA5078570	BRAKE HOSE, LOWER, STEEL LINE TO CALIPER, 500MM LONG, HYDRAULIC OIL, G6 MY20	1
7	GA5078570	BRAKE HOSE, LOWER, STEEL LINE TO CALIPER, 500MM LONG, HYDRAULIC OIL, G6 MY20	1
8	GA5010359	CLIP FOR BRAKE HOSE	2
9	GA4507085	SHIM, 2MM STAINLESS, FRONT HUB 2WD	2
10	GA4652800	HUB, FRONT AXLE, 2WD, SELF PROPELLED, MY11	2
11	JCB-CALIPER-SHIM	JCBCALIPER SHIM 1MM FMS 5/9/03	2
12	GA5001513	NUT M20 X 1.5P NYLOC ZP	12
13	2AFA013LAS	PLATE, DROPLEG ACCESS COVER, 2WD DROPLEG, CROP CRUISER MY11 - CURRENT	2
14	GA5001515	SET SCREW M20 X 1.5P X 50 GR8.8 ZP	4
15	GA5007475	WASHER 12 X 22MM COPPER	2
16	GA5000577	WASHER 12MM FLAT SS HD	14
17	GA5001741	WASHER 20MM FLAT SS HD	16
18	GA4414610	PLATE, NUT RETAINER, DROP LEG, 2WD, CROP CRUISER	4

3-4m Front Adjustable Axle - Steering

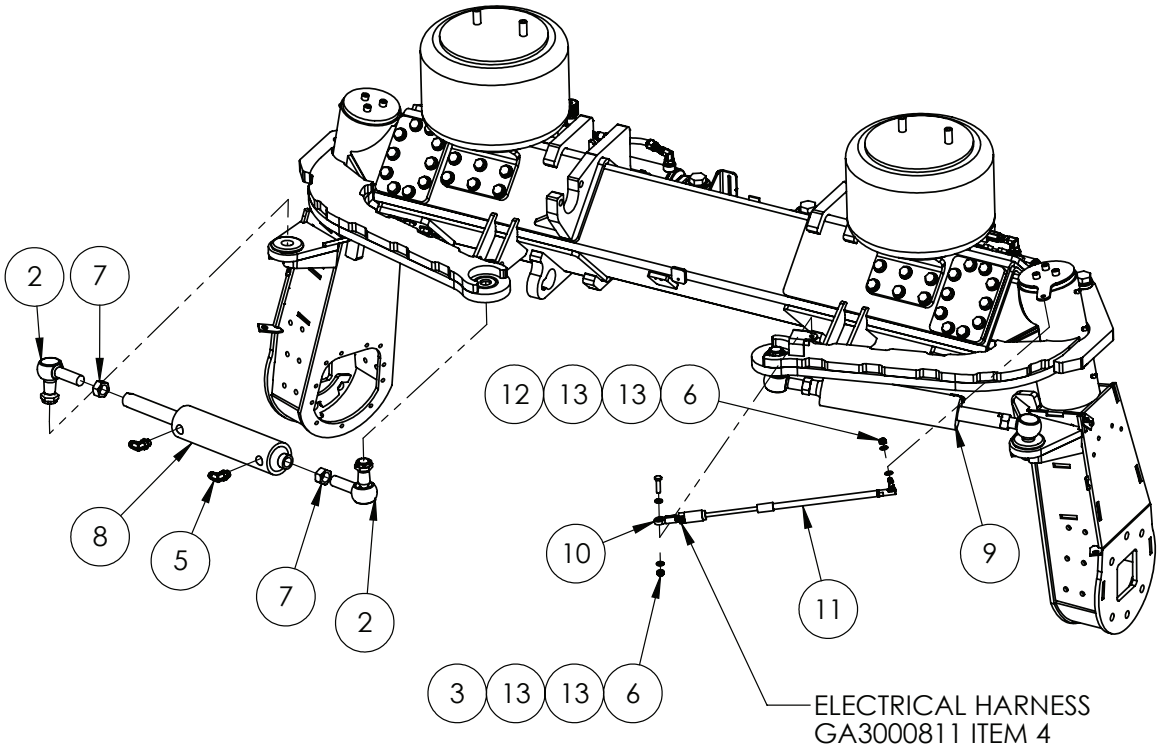

ITEM NO.	PART NUMBER	DESCRIPTION	QTY.
1	*	ASSEMBLY DRAWING ONLY, AXLE SUB ASSY	1
2	GA5065041	BALL JOINT, RIGHT ANGLE, M28 X 1.5 THREAD	4
3	GA5006055	BOLT M10 X 40 GR8.8 ZP	1
4	GA3000811	ELECTRICAL HARNESS, 3 PIN DEUTSCH 1M EXTENSION	1
5	GA3500356	HYDRAULIC ADAPTOR, ELBOW, 90 DEGREE, 3/4” JIC MALE X 3/4” UN MALE O-RING, S91-1212	4
6	GA5000141	NUT M10 NYLOC ZP	2
7	GA4553195	NUT, M28 X 1.5, 20MM WIDE, ZP	4
8	GA5060750	HYDRAULIC CYLINDER, BORE 3”, ROD 1.5”, STROKE 8”, DUAL PHASING, 1MM ORIFICE	1
9	GA5060750	HYDRAULIC CYLINDER, BORE 3”, ROD 1.5”, STROKE 8”, DUAL PHASING, 1MM ORIFICE	1
10	GA3000145	ROSE END, M10 SUIT GA3000144, RAVEN 11030001029	1
11	GA3000144	SENSOR, LINEAR NON CONTACT, STEERING, 250MM, RAVEN 10630181021	1
12	GA3000146	STUD END, M10 SUIT GA3000144, RAVEN 11030001030	1
13	GA5000117	WASHER 10MM FLAT SS HD	4

3-4m Front Adjustable Axle - Linkage & Suspension

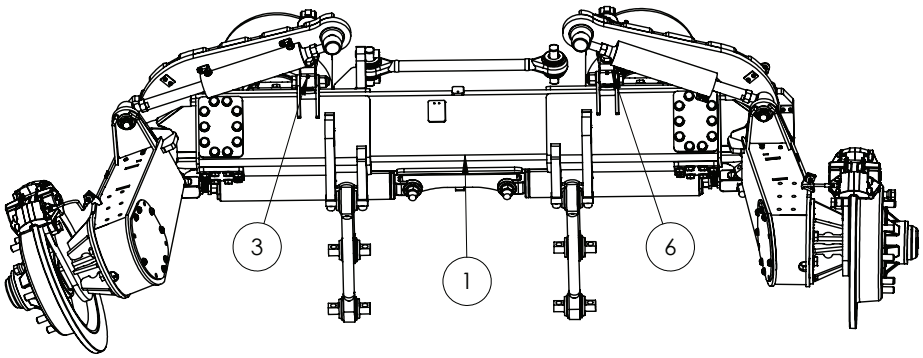

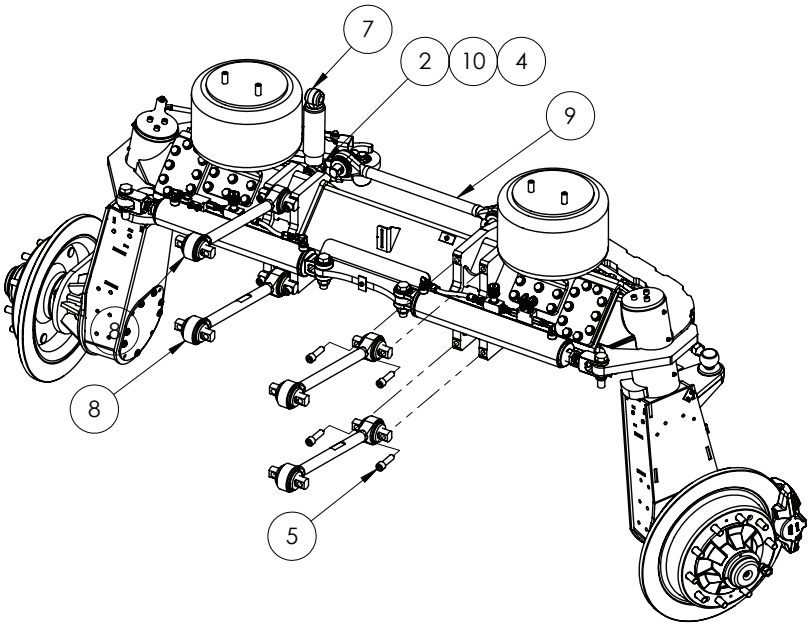

ITEM NO.	PART NUMBER	DESCRIPTION	QTY.
1	*	ASSEMBLY DRAWING ONLY, FRONT AXLE SUB ASSEMBLY	1
2	GA5011346	BOLT M24 X 115 GR8.8 ZP SPECIAL 75 TO 77mm SHANK	4
3	GA5050450	GREASE NIPPLE, 6mm	2
4	GA5012469	NUT M24 NYLOC ZP	4
5	GA5053145	SHCS 3/4 UNF X 2 1/2 GR12.9 ZP BLUE	10
6	GA4660670	SHOCK ABSORBER MOUNT, FRONT AXLE, SELF PROPELLED 2015	2
7	GA2500000	SHOCK ABSORBER, SUSPENSION DAMPER, BLACK, MONROE	2
8	GA5078648	SUSPENSION LINK, TORQUE ROD, 550mm CENTRE, SOLID, ATRO	4
9	GA5068850	SUSPENSION LINK, TORQUE ROD, 650mm CENTRE, HOLLOW, ATRO	1
10	GA5001891	WASHER 24mm FLAT HD SS	8

Continued over page

3-4m Front Adjustable Axle - Suspension

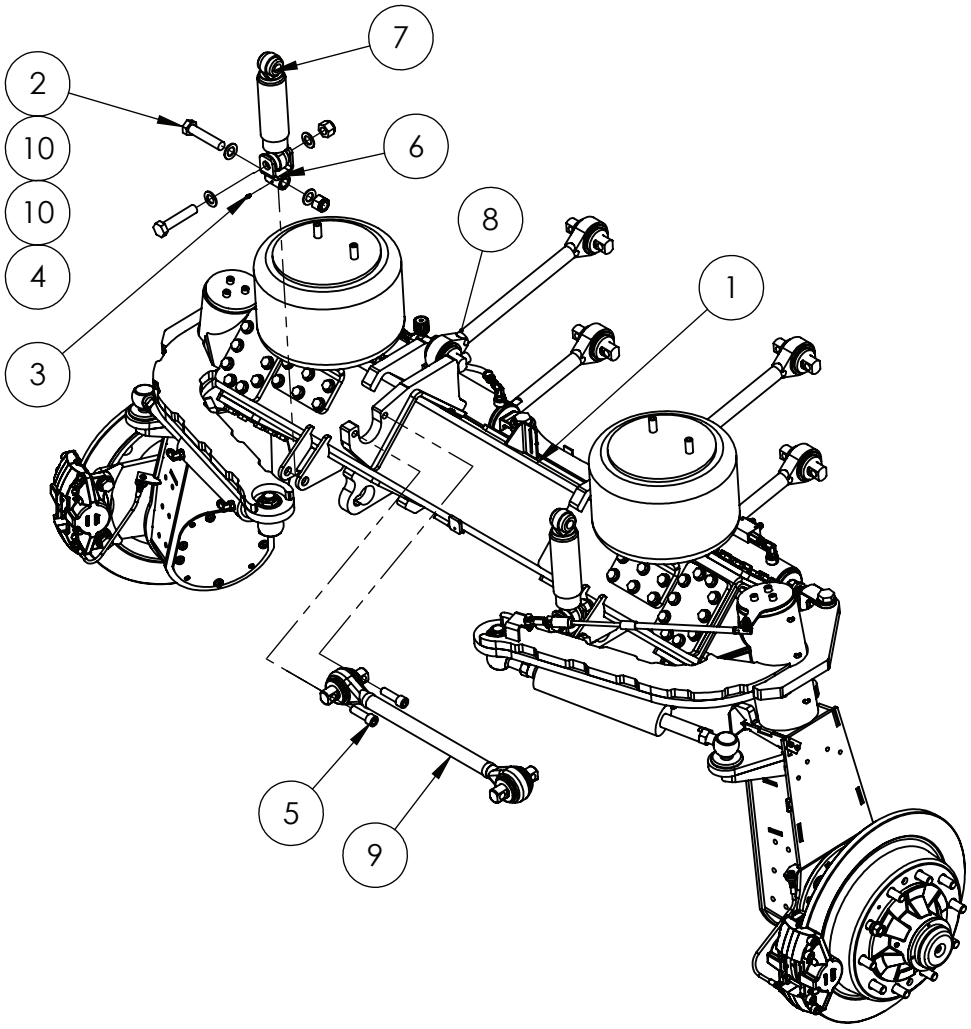

ITEM NO.	PART NUMBER	DESCRIPTION	QTY.
1	*	ASSEMBLY DRAWING ONLY, FRONT AXLE SUB ASSEMBLY	1
2	GA5011346	BOLT M24 X 115 GR8.8 ZP SPECIAL 75 TO 77mm SHANK	4
3	GA5050450	GREASE NIPPLE, 6mm	2
4	GA5012469	NUT M24 NYLOC ZP	4
5	GA5053145	SHCS 3/4 UNF X 2 1/2 GR12.9 ZP BLUE	10
6	GA4660670	SHOCK ABSORBER MOUNT, FRONT AXLE, SELF PROPELLED 2015	2
7	GA2500000	SHOCK ABSORBER, SUSPENSION DAMPER, BLACK, MONROE	2
8	GA5078648	SUSPENSION LINK, TORQUE ROD, 550mm CENTRE, SOLID, ATRO	4
9	GA5068850	SUSPENSION LINK, TORQUE ROD, 650mm CENTRE, HOLLOW, ATRO	1
10	GA5001891	WASHER 24mm FLAT HD SS	8

3-4m Front Adjustable Axle - Crop Deflectors

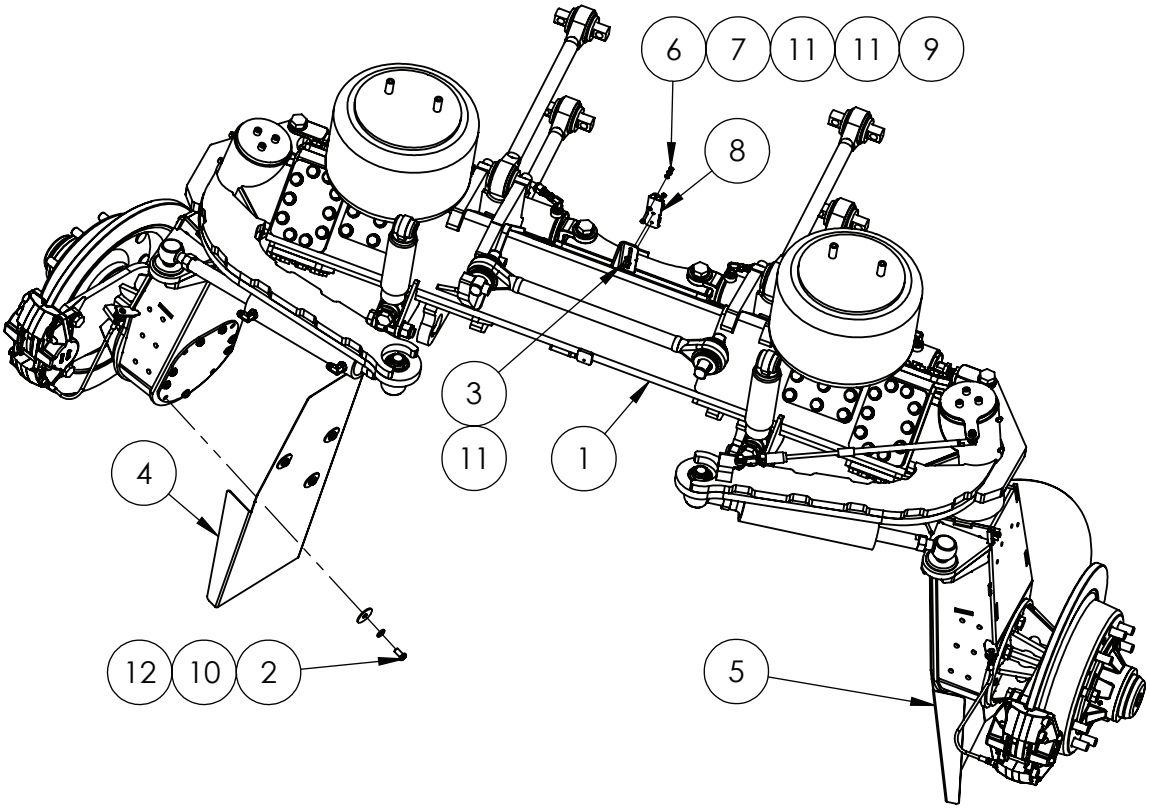

ITEM NO.	PART NUMBER	DESCRIPTION	QTY.
1	*	"ASSEMBLY DRAWING ONLY, FRONT AXLE SUB ASSEMBLY"	1
2	GA5000291	BHCS M12 X 25 SS A2-70	8
3	GA5004065	BOLT M6 X 20 GR8.8 ZP	2
4	GA4503390	CROP DEFLECTOR-LH FRONT-2006 -2009	1
5	GA4503395	CROP DEFLECTOR-RH FRONT-2006 -2009	1
6	GA5048115	NUT M6 NYLOC ZP	3
7	GA5049030	NUT M6 SS	1
8	GA4411055	"PLATE, RIDE HEIGHT LINK, FRONT AXLE, 2WD, 3-4m ADJUSTABLE, G6, MY21"	1
9	GA5004079	SET SCREW M6 X 30 GR8.8 ZP	1
10	GA5000577	WASHER 12mm FLAT SS HD	8
11	GA5004437	WASHER 6mm FLAT SS	6
12	GA4535345	WASHER, 50 OD X 14.5 ID, SS	8

3-4m Front Adjustable Axle - Brake Covers

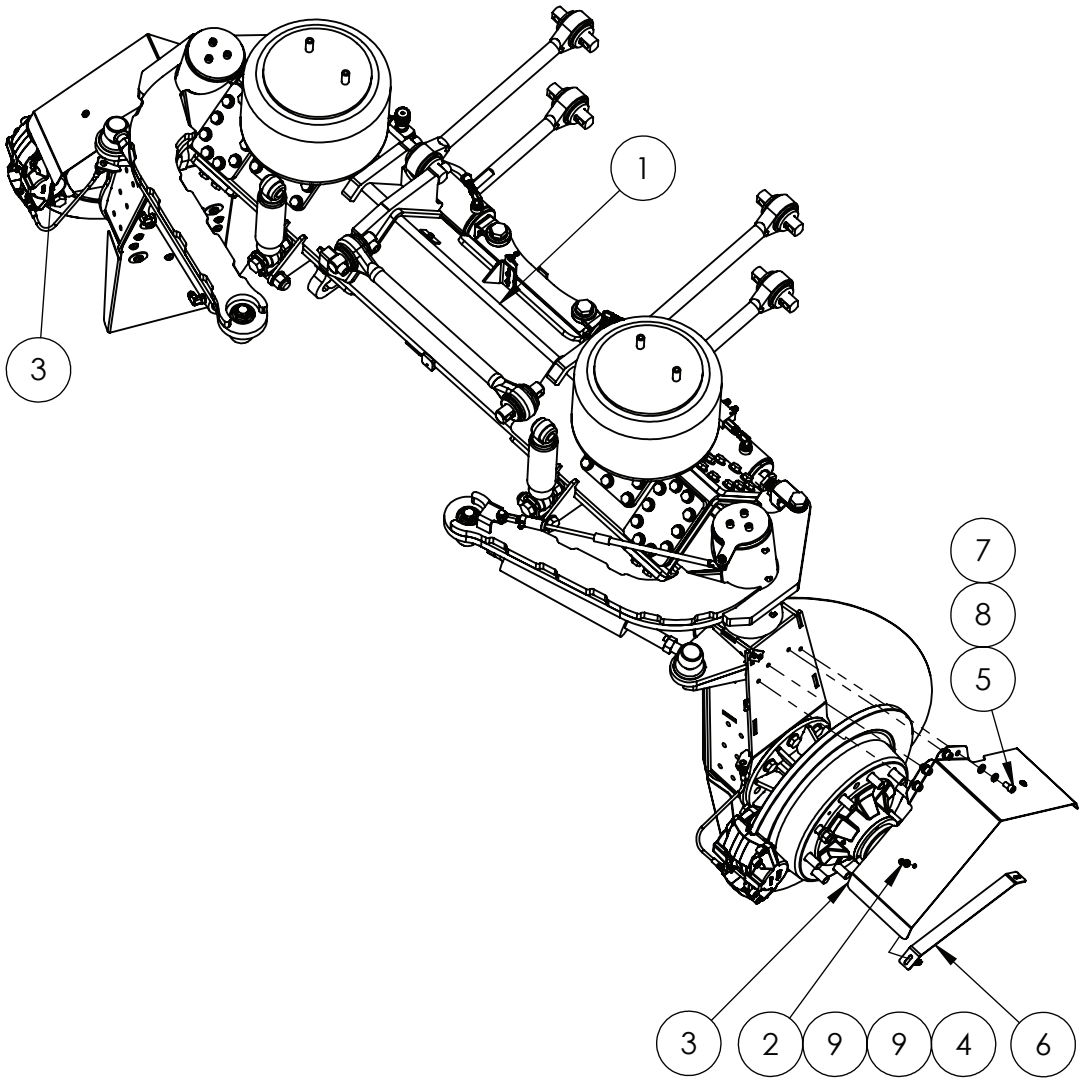

ITEM NO.	PART NUMBER	DESCRIPTION	QTY.
1	*	ASSEMBLY DRAWING ONLY, FRONT AXLE SUB ASSEMBLY	1
2	GA5011473	BHCS M8 X 25 SS A2-70	4
3	GA4541955	BRAKE COVER, FRONT AXLE 2WD, G6 MY19	2
4	GA5004917	NUT M8 NYLOC ZP	4
5	GA5050330	SHCS M12 X 20 GR12.9 ZP	8
6	GA4404855	STIFFENER, BRAKE COVER, FRONT AXLE 2WD/4WD, G6 MY19	2
7	GA5000577	WASHER 12MM FLAT SS HD	8
8	GA5000575	WASHER 12MM SPRING SS	8
9	GA5003643	WASHER 8MM FLAT SS HD	8

3-4m Front Adjustable Axle - Housing

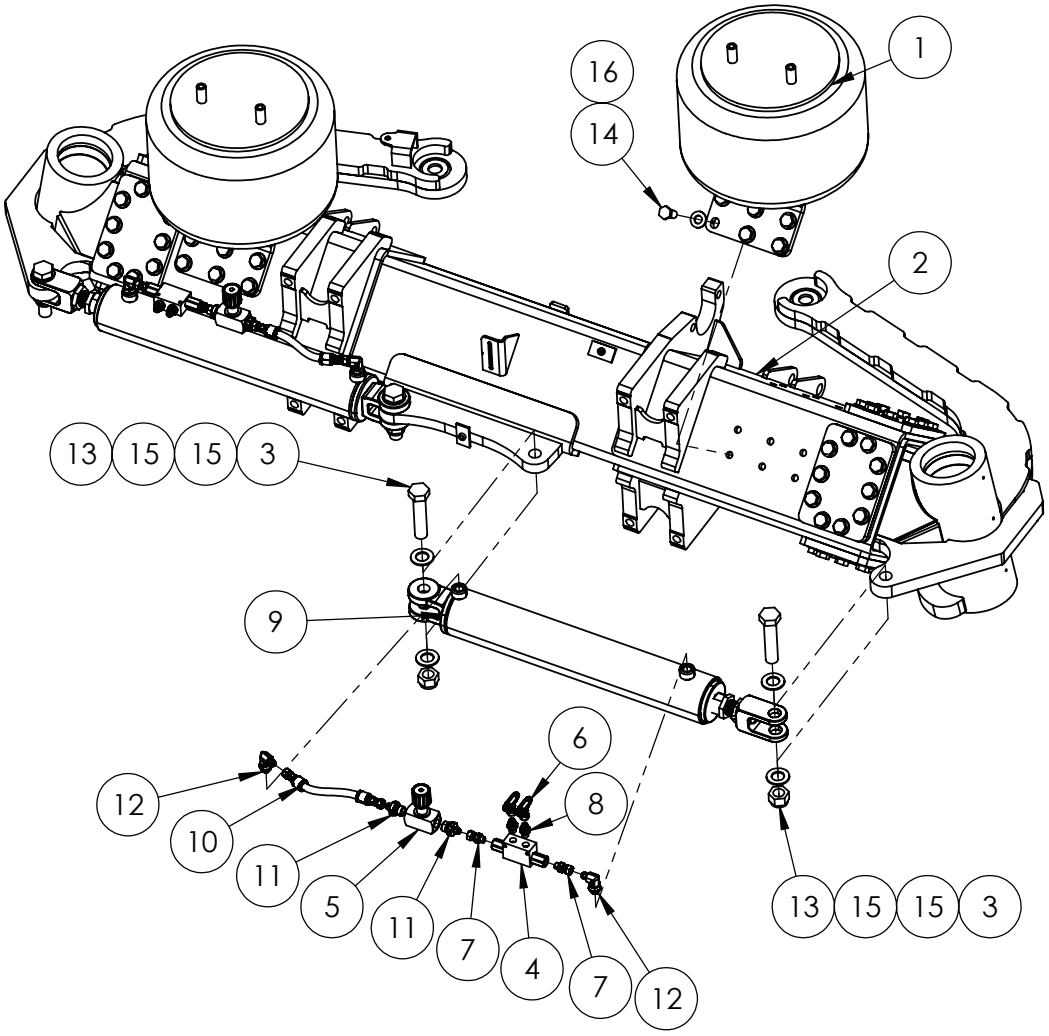

ITEM NO.	PART NUMBER	DESCRIPTION	QTY.
1	*	ASSEMBLY DRAWING ONLY, AIRBAG ASSY	2
2	*	ASSEMBLY DRAWING ONLY, AXLE HOUSING SUB ASSY	1
3	GA5006149	BOLT 1 UNC X 4 1/2 GR8 ZP	4
4	GA5007957	DOUBLE PILOT CHECK (RA) 12LPM 1/4 BSPP	2
5	GA5018221	FLOW CONTROL VALVE, NEEDLE THROTTLE, 1/2", TYPE DV, HYDAC	2
6	GA3501135	"HYDRAULIC ADAPTER, TEE, 9/16"" JIC MALE X 9/16"" JIC MALE X 9/16"" JIC FEMALE SWIVEL, S68-090909"	2
7	GA3501136	HYDRAULIC ADAPTER, 1/4" BSPP O-RING MALE X 9/16" FEMALE SWIVEL, S71-0409	4
8	GA3500544	HYDRAULIC ADAPTOR NIPPLE, 1/4" BSP O-RING X 9/16" JIC, S74-0409	4
9	GA3501074	"HYDRAULIC CYLINDER, BORE 3.5"", ROD 1.75"", STROKE 500mm, CLEVIS ENDS, DOUBLE PILOT CHECK VALVE, THROTTLE VALVE"	2

3-4m Front Adjustable Axle - Housing

ITEM NO.	PART NUMBER	DESCRIPTION	QTY.
10	GA3501138	HYDRAULIC HOSE ASSEMBLY, 1/4", 9/16 JIC FEMALE, 9/16 JIC FEMALE, TBA	2
11	GA3500718	HYDRAULIC ADAPTER, NIPPLE, 1/2" BSPP MALE X 9/16" JIC, S74-0809	4
12	GA3500319	"HYDRAULIC ADAPTOR, ELBOW, 90 DEGREE, 9/16"" JIC MALE X 3/8"" BSPP MALE O-RING, S76-0609"	4
13	GA5012439	NUT 1" NYLOC UNC ZP	4
14	GA5011287	SET SCREW M16 X 40 GR 8.8 ZP	24
15	GA5001893	WASHER 1 X 1 7/8 X 14G	8
16	GA5001043	WASHER 16mm FLAT SS HD	24

3-4m Front Adjustable Axle - Wear Pads & Shims

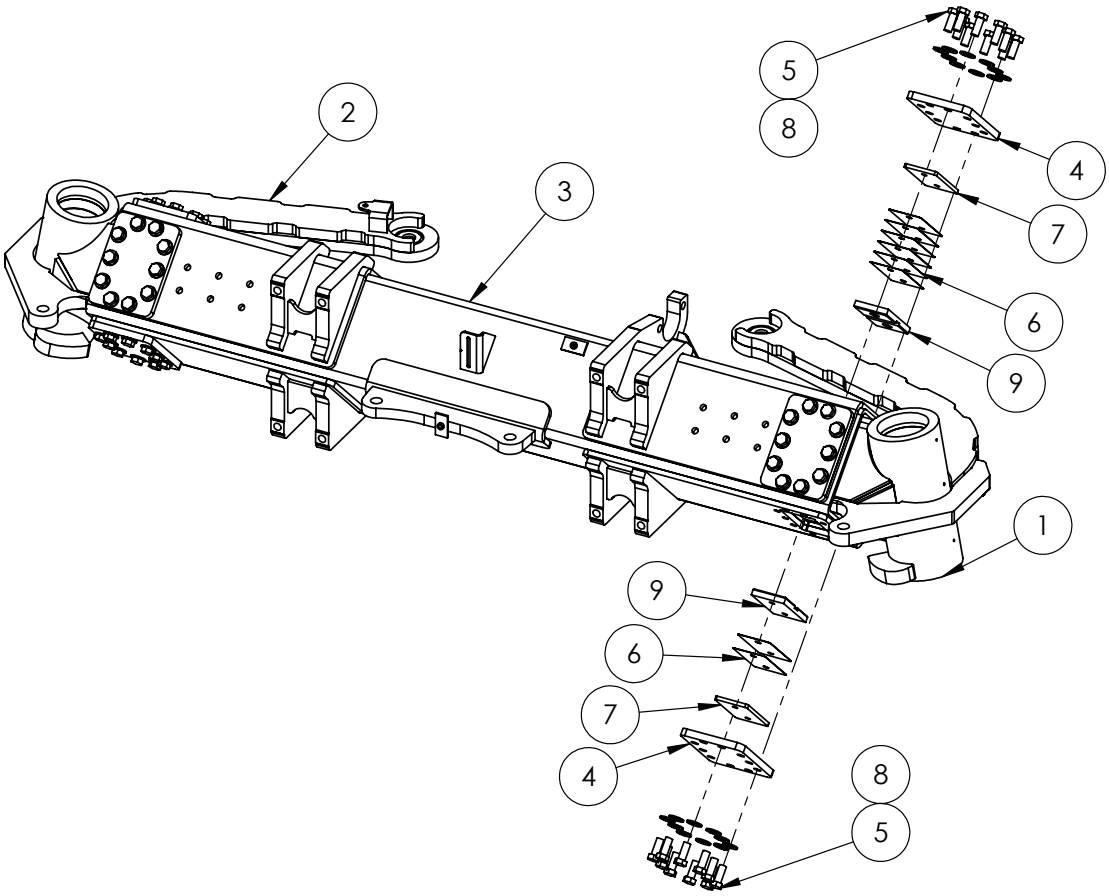

ITEM NO.	PART NUMBER	DESCRIPTION	QTY.
1	*	ASSEMBLY DRAWING ONLY, LH AXLE SLIDER	1
2	*	ASSEMBLY DRAWING ONLY, RH AXLE SLIDER	1
3	*	AXLE HOUSING, FRONT, 3-4m ADJUSTABLE, G6, MY21	1
4	GA4411050	PLATE, WEAR PAD RETAINER, AXLE HOUSING, FRONT, 3-4m ADJUSTABLE, G6, MY21	8
5	GA5011287	SET SCREW M16 X 40 GR 8.8 ZP	80
6	GA4411270	SHIM, 3-4M ADJUSTABLE AXLES, G6, MY21	32
7	GA4411060	SPACER, 3-4m ADJUSTABLE AXLES, G6, MY21	8
8	GA5001043	WASHER 16mm FLAT SS HD	80
9	GA4551750	WEAR PAD, AXLE SLIDER, 3-4m ADJUSTABLE AXLE, G6, MY21	8

3-4m Front Adjustable Axle - Air Bag

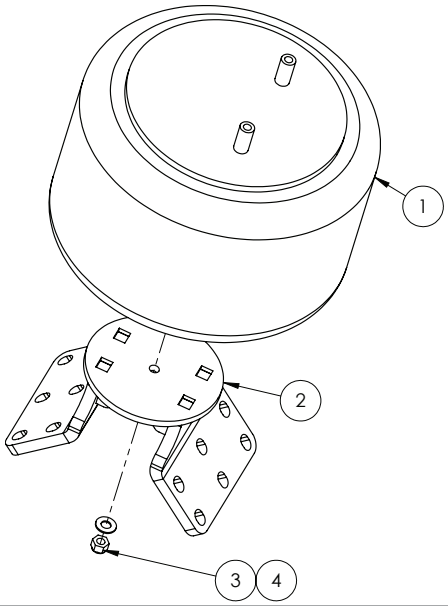

ITEM NO.	PART NUMBER	DESCRIPTION	QTY.
1	GA5005115	AIR SPRING AA300 DUAL AIR STUD	1
2	GA4603790	FRONT AIR BAG MOUNT, 3-4m ADJUSTABLE AXLE, G6, MY21	1
3	GA5050580	NUT 1/2 UNC NYLOC ZP	1
4	GA5017673	WASHER 1/2" HIGH TENSILE	1

3-4m Front Adjustable Axle - RH Slider

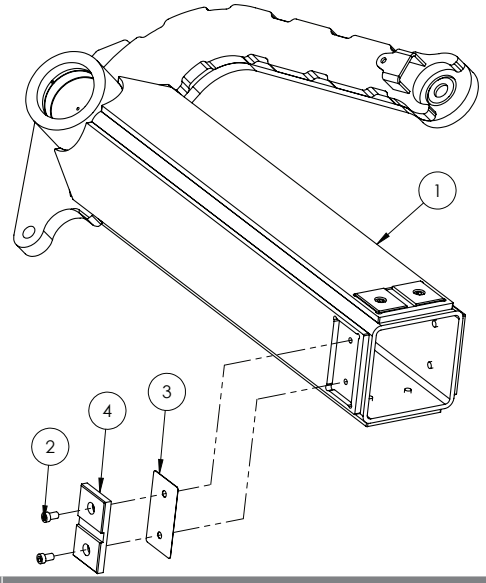

ITEM NO.	PART NUMBER	DESCRIPTION	QTY.
1	GA4603800	AXLE SLIDER, FRONT, RH, 3-4m ADJUSTABLE AXLE, G6, MY21	1
2	GA0500015	SHCS, M12 X 20, LOW HEAD, BLACK	8
3	GA4411270	SHIM, 3-4M ADJUSTABLE AXLES, G6, MY21	4
4	GA4551750	WEAR PAD, AXLE SLIDER, 3-4m ADJUSTABLE AXLE, G6, MY21	4

3-4m Front Adjustable Axle - LH Slider

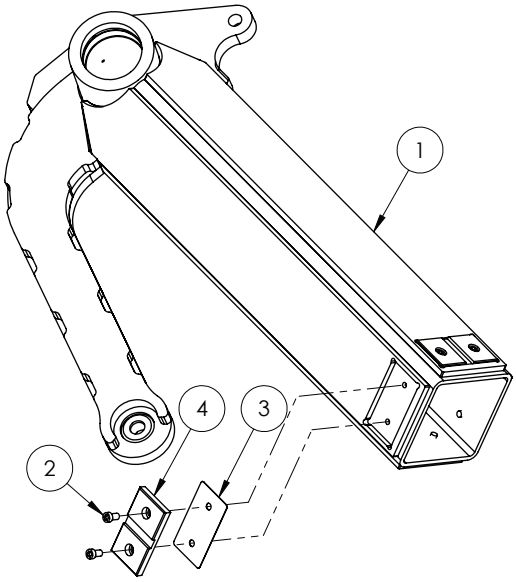

ITEM NO.	PART NUMBER	DESCRIPTION	QTY.
1	GA4603805	AXLE SLIDER, FRONT, LH, 3-4m ADJUSTABLE AXLE , G6, MY21	1
2	GA0500015	SHCS, M12 X 20, LOW HEAD, BLACK	8
3	GA4411270	SHIM, 3-4M ADJUSTABLE AXLES, G6, MY21	4
4	GA4551750	WEAR PAD, AXLE SLIDER, 3-4m ADJUSTABLE AXLE, G6, MY21	4

Rear Axle - Drop Leg Mounting

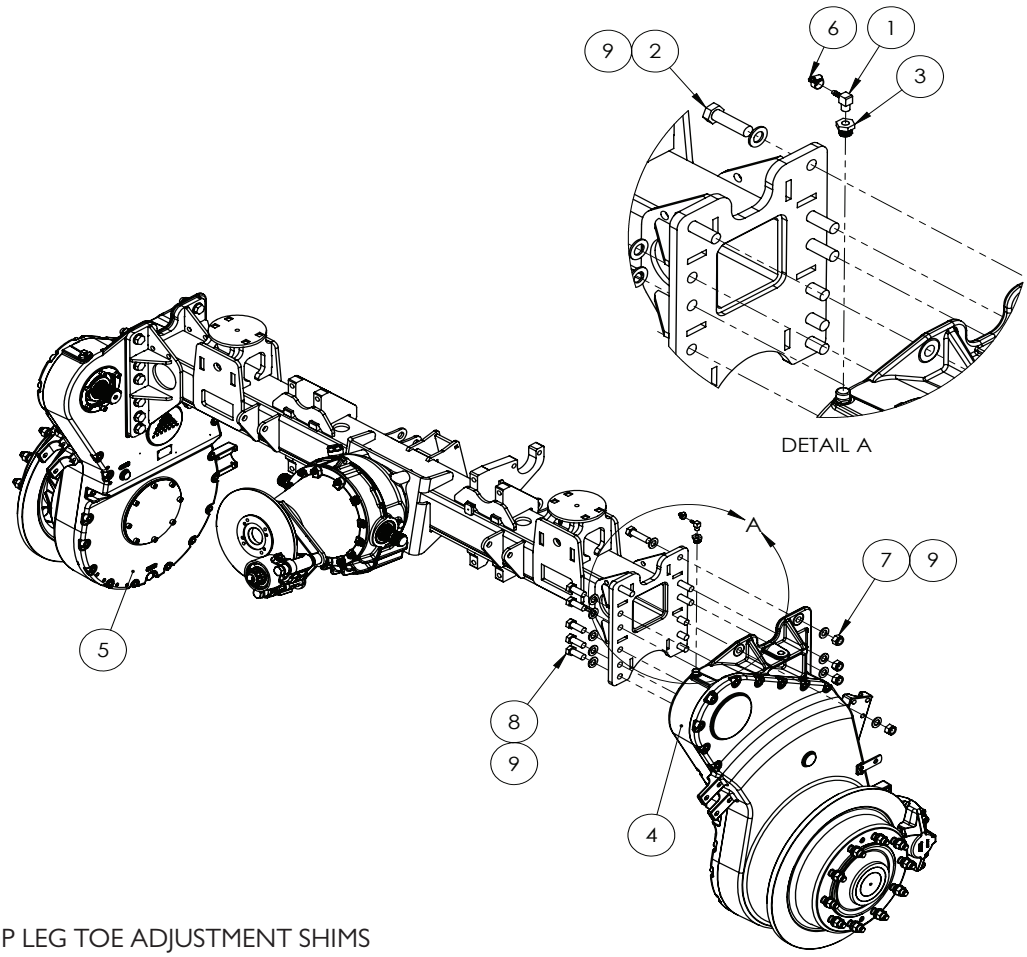

DROP LEG TOE ADJUSTMENT SHIMS

PART NUMBER	DESCRIPTION
GA4537200	SHIM REAR DROP LEG 0.5MM
GA4537205	SHIM REAR DROP LEG 1MM

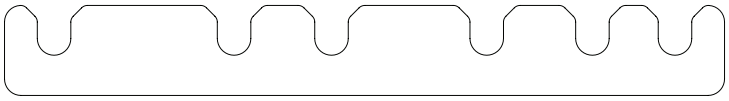

ITEM NO.	PART NUMBER	DESCRIPTION	QTY.
1	GA5048340	ELBOW, 90 DEGREE, 1/4" MALE THREAD X 1/4" HOSE, BRASS	2
2	GA5001565	BOLT M20 X 70 GR8.8 ZP	8
3	GA5078821	BUSH, REDUCING, BRASS M18X1.5 MALE X 1/4" BSP FEMALE, BF24M-1804	2
4	GA2700051	DROPLEG ASSEMBLY WITH CAST HOUSING, LH, REAR AXLE, G5 G6, DROMOS	1
5	GA2700052	DROPLEG ASSEMBLY WITH CAST HOUSING, RH, REAR AXLE, G5 G6, DROMOS	1
6	GA5004861	HOSE CLAMP 1/4, SS (8-12, 7.5W3P)	2
7	GA5048125	NUT M20 NYLOC COARSE ZP	8
8	GA5011321	SET SCREW M20 COURSE X 50 GR8.8 ZP	16
9	GA5001741	WASHER 20MM FLAT SS HD	32

Continued over page

Rear Axle - Sway Bar & Torque Rods

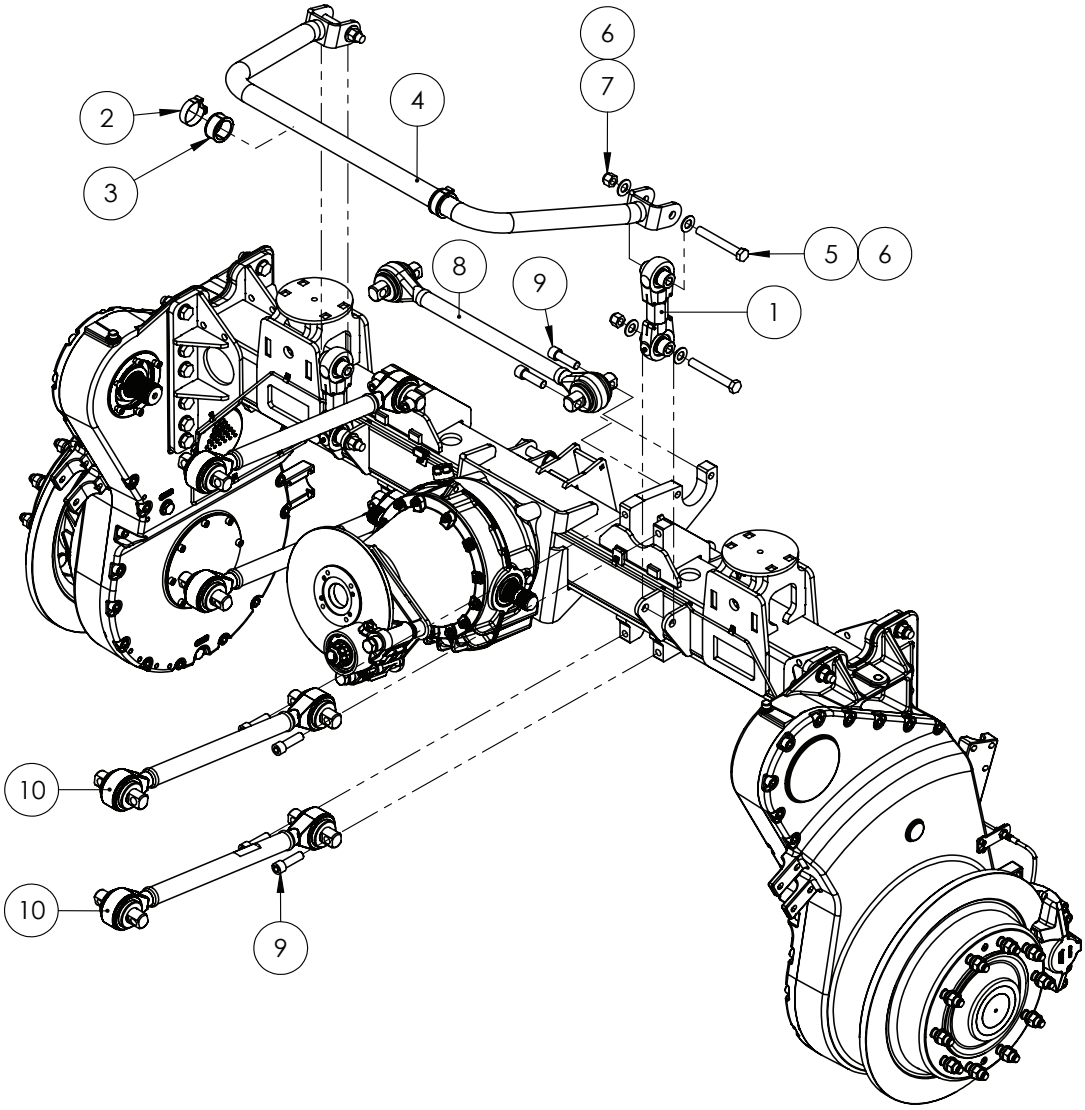

ITEM NO.	PART NUMBER	DESCRIPTION	QTY.
-	GA4602420	AXLE HOUSING, REAR, 2WD	1
-	GA4602425	AXLE HOUSING, REAR 4WD	1
1	GA4949935	SWAY BAR LINK ASSEMBLY, G6 MY20	2
2	GA5078424	HOSE CLAMP, 60 - 63MM, WIDE BAND T-BOLT, SS, PERFORMER	2
3	GA4551610	BUSH, SWAY BAR CLAMP, LATERAL LOCK, MY21	2
4	GA2500004	SWAY BAR, 48MM FABRICATED, G6 MY20	1
5	GA5070335	BOLT 3/4 UNC X 5 1/2 GR8 ZP	4
6	GA5001045	WASHER, 3/4" FLAT, HD ZP	8
7	GA5048430	NUT 3/4 UNC NYLOC ZP	4
8	GA5068850	SUSPENSION LINK, TORQUE ROD, 650MM CENTRE, HOLLOW, ATRO	1
9	GA5053145	SHCS 3/4 UNF X 2 1/2 GR12.9 ZP BLUE	10
10	GA5068851	SUSPENSION LINK, TORQUE ROD, 650MM CENTRE, SOLID, ATRO	4

Continued over page

Rear Axle - Airbags & Shocks

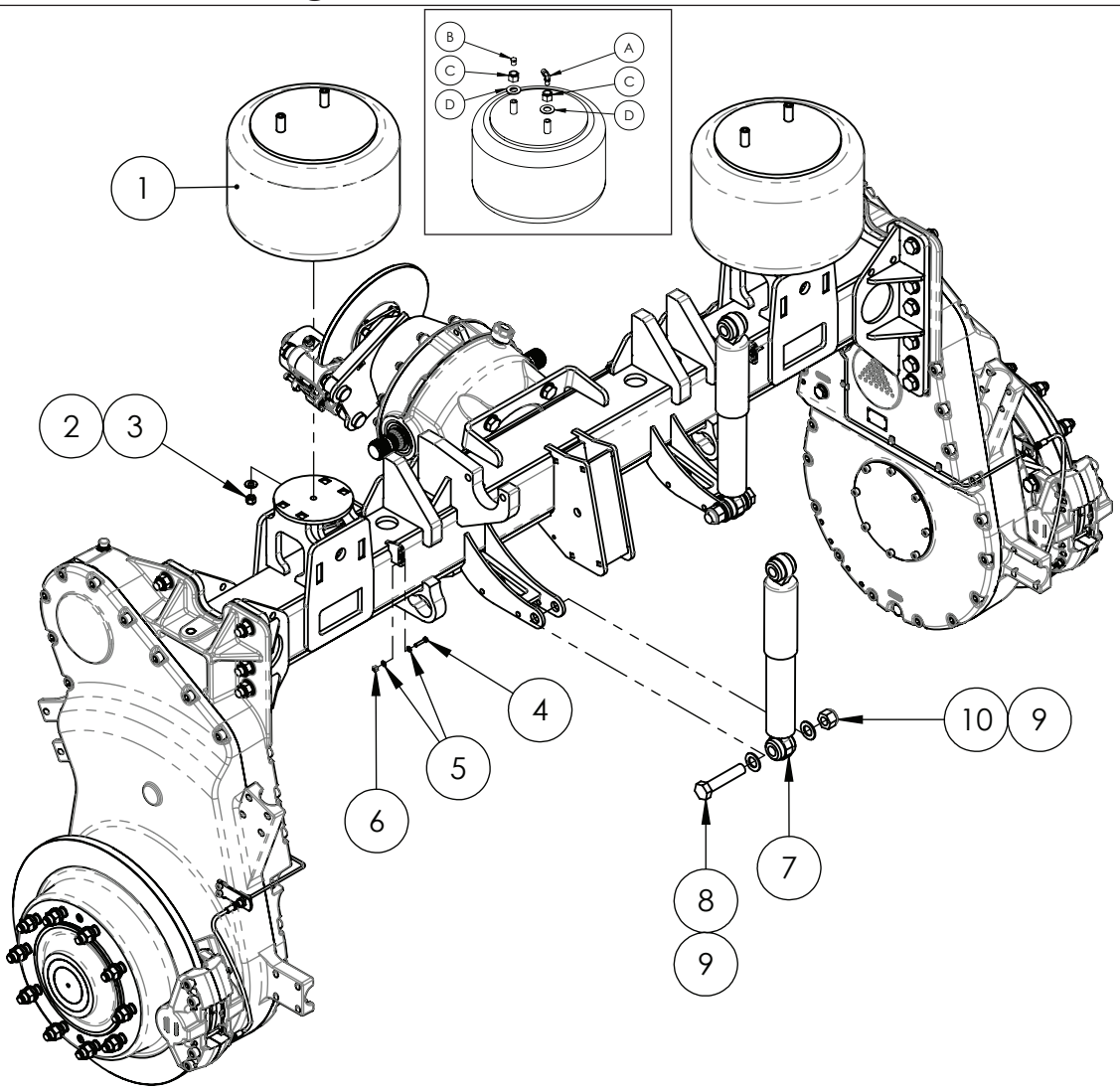

ITEM NO.	PART NUMBER	DESCRIPTION	QTY.
A	GA5078518	AIR FITTING, ELBOW, SWIVEL, 3/8” TUBE, 1/4” NPT MALE, PUSH IN, BRASS	2
B	GA5069335	PLUG 1/4” BSPT BRASS	2
C	GA5049495	NUT 3/4 UNF NYLOC ZP	4
D	GA5001045	WASHER, 3/4” FLAT, HD ZP	4
1	GA5005115	AIR SPRING AA300 DUAL AIR STUD	2
2	GA5017673	WASHER 1/2" HIGH TENSILE	2
3	GA5050580	NUT 1/2 UNC NYLOC ZP	2
4	GA5004079	SET SCREW M6 X 30 GR8.8 ZP	2
5	GA5004437	WASHER 6MM FLAT SS	4
6	GA5049030	NUT M6 SS	2
7	GA2500000	SHOCK ABSORBER, SUSPENSION DAMPER, BLACK, MONROE	2
8	GA5011346	BOLT M24 X 115 GR8.8 ZP SPECIAL 75 TO 77MM SHANK	2
9	GA5001891	WASHER 24MM FLAT HD SS	4
10	GA5012469	NUT M24 NYLOC ZP	2

* Sub-assembly on following pages

Rear Axle - Sway Bar Link

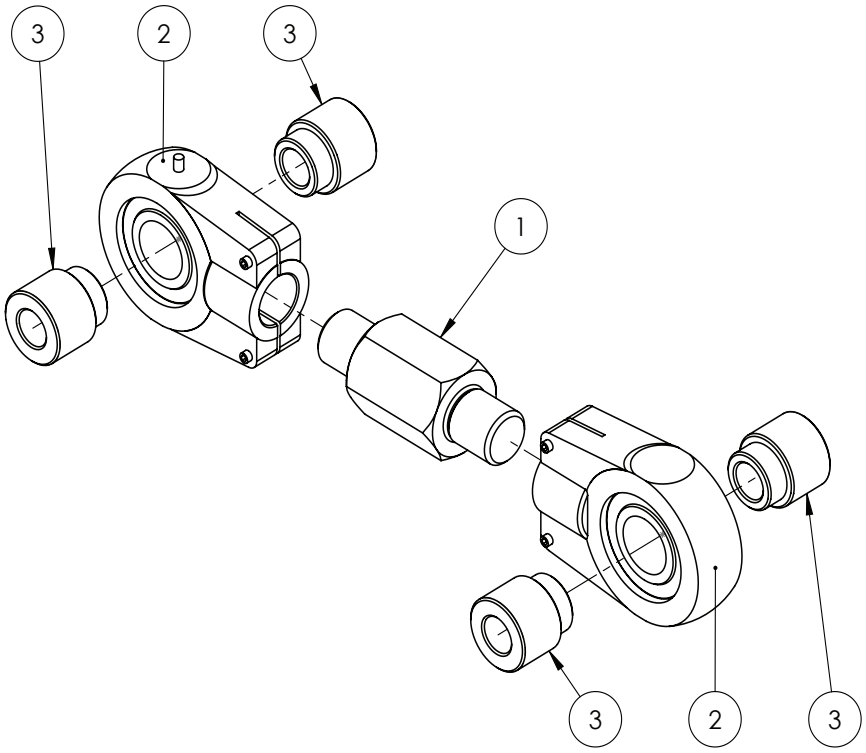

Quantities shown are per side.

ITEM NO.	PART NUMBER	DESCRIPTION	QTY.
1	GA4551505	LINK, SWAY BAR, M28 THREADS	1
2	GA5052965	BEARING, ROSE END HOUSING, M28 SCREW ON, SUIT HYDRAULIC CYLINDER & DELTA LINK, INC. BUSHES	2
3	GA4551465	BUSH, SPACER, BALL END, SWAY BAR LINK	4

Rear Axle - Drive Shafts - (Up to S/N 204075)

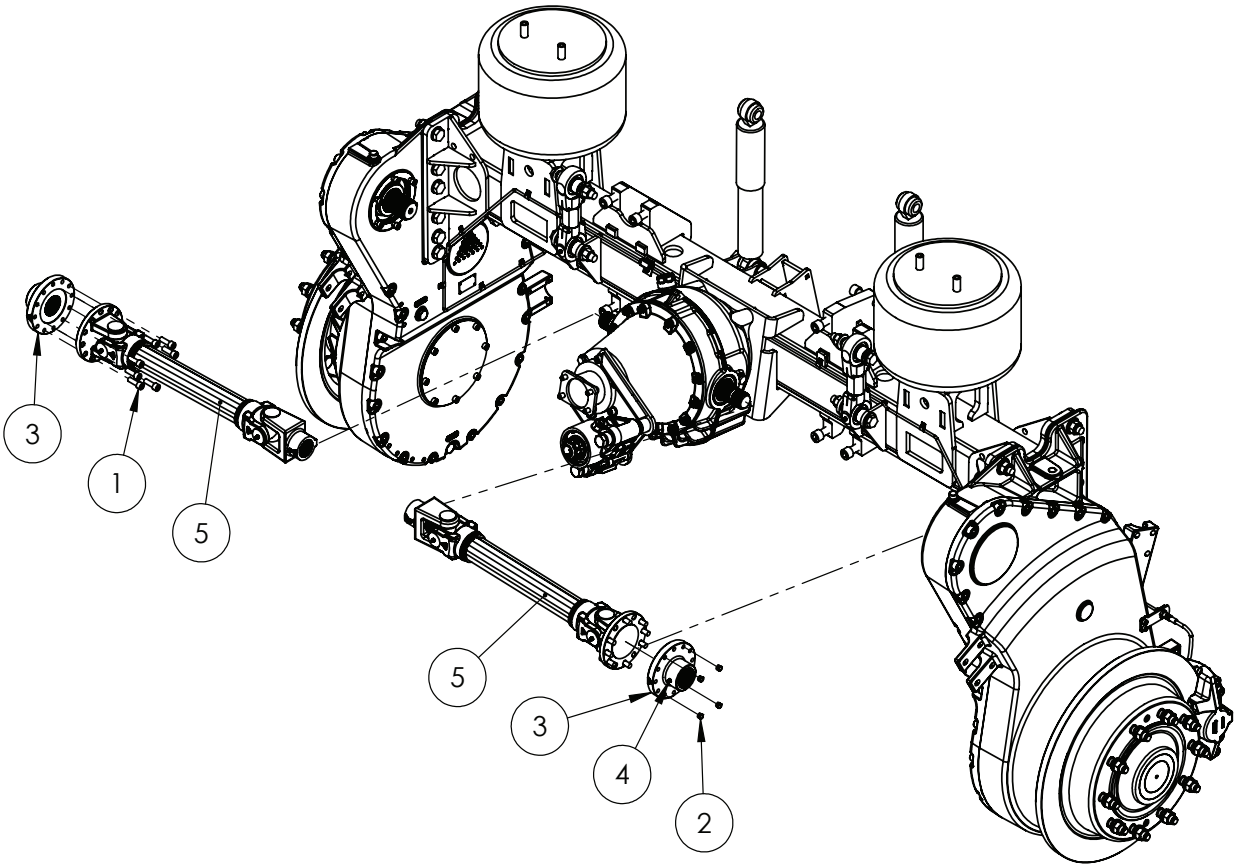

ITEM NO.	PART NUMBER	DESCRIPTION	QTY.
1	GA5000313	SHCS M12 X 35 GR12.9 ZP	16
2	GA5052905	"END CAP, PLASTIC, BLACK, INSERT, ROUND. 10MM, 0.8 - 1.5MM WALL"	16
3	GA4550150	"DRIVE FLANGE REAR DROPLEG 2600 SERIES WITH 55MM SPLINE"	2
4	GA5012203	GREASE NIPPLE 1/4" UNF SHORT	2
5	GA2700065	"DRIVE SHAFT, DIFF TO DROP LEG, 2600 SERIES UJ, 794MM LONG, BLACK"	2
6	GA222	DECAL, GREASE HERE SYMBOL	8

Rear Axle - Drive Shaft, Diff/ Drop Leg (Up to S/N 204075)

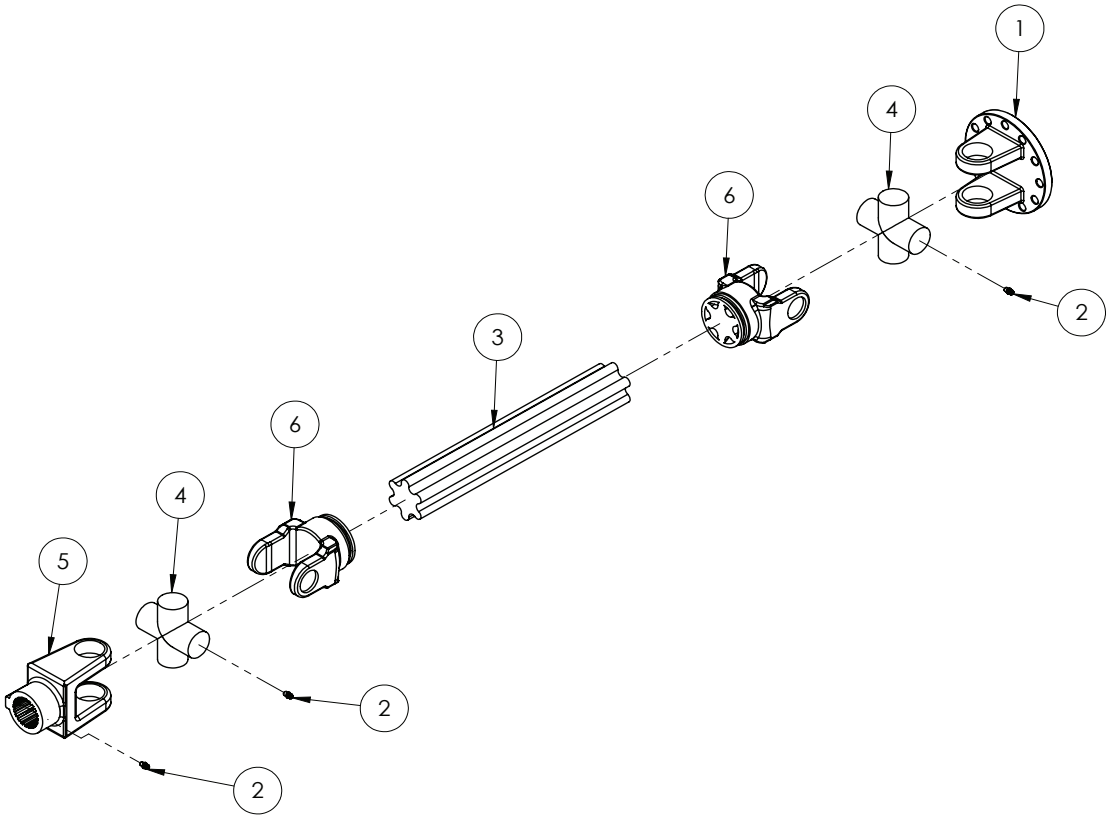

ITEM NO.	PART NUMBER	DESCRIPTION	QTY.
1	GA2700127	FLANGE, DRIVE SHAFT, 12 BOLT FLANGE TO 2600 UNI	1
2	GA5012203	GREASE NIPPLE, SHORT, 1/4 UNF, MACH0207	3
3	GA2700131	TUBE, STAR S6, 3m REAR, G6	1
4	GA2700128	UNIVERSAL JOINT, 2600	2
5	GA2700130	YOKE, 2600 UNI TO 1 3/4" 20 TOOTH FEMALE SPLINE	1
6	GA2700129	YOKE, 2600 UNI TO S6 STAR TUBE	2

Rear Axle - Drive Shafts - (From S/N 204087)

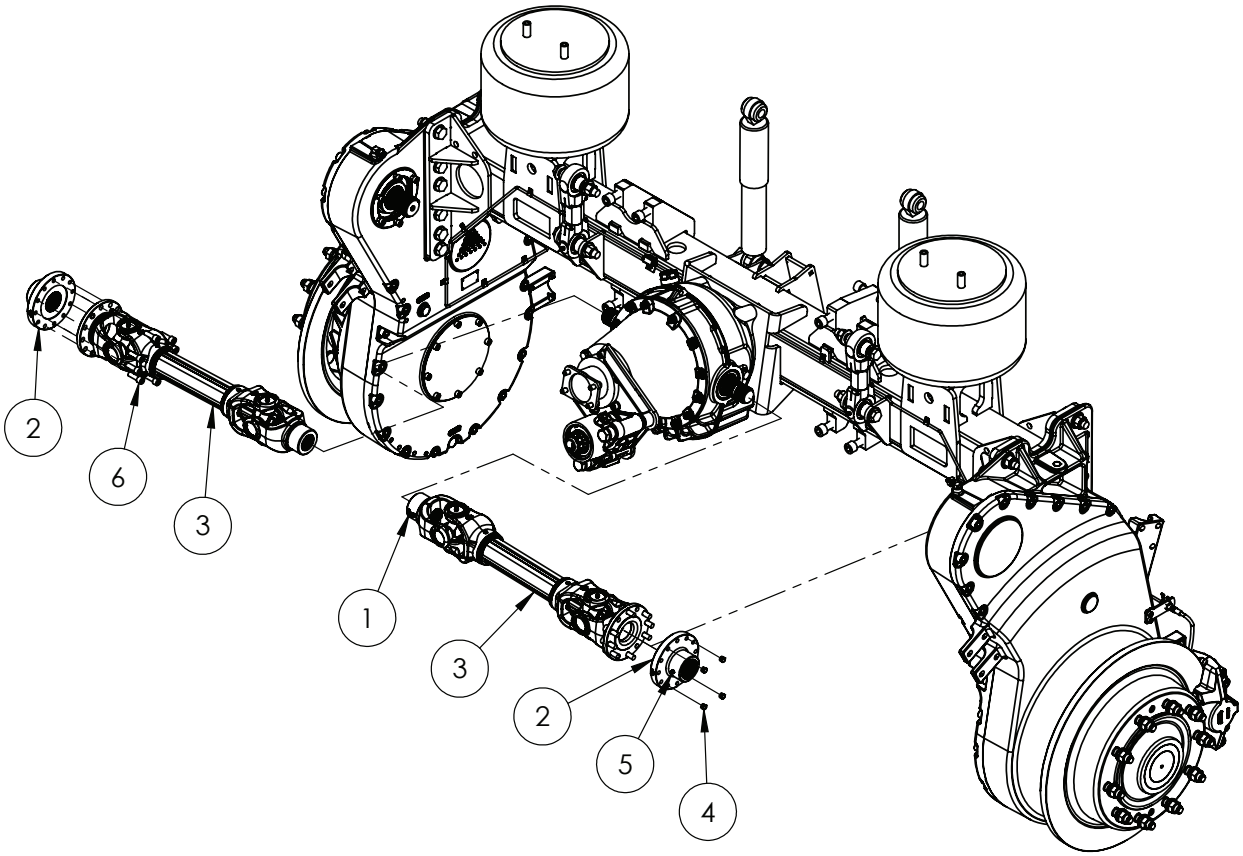

ITEM NO.	PART NUMBER	DESCRIPTION	QTY.
1	GA222	DECAL, GREASE HERE SYMBOL	8
2	GA4550150	DRIVE FLANGE, SUIT REAR DROPLEG, 2600 SERIES, 55mm SPLINE, CROP CRUISER	2
3	GA2700162	DRIVE SHAFT, DIFF TO DROP LEG, G6, EUROCARDAN	2
4	GA5052905	END CAP, PLASTIC, BLACK, INSERT, ROUND. 10mm, 0.8 - 1.5mm WALL	16
5	GA5012203	GREASE NIPPLE, SHORT, 1/4 UNF, MACH0207	2
6	GA5000313	SHCS M12 X 35 GR12.9 ZP	16

Rear Axle - Drive Shaft, Diff/ Drop Leg (From S/N 204087)

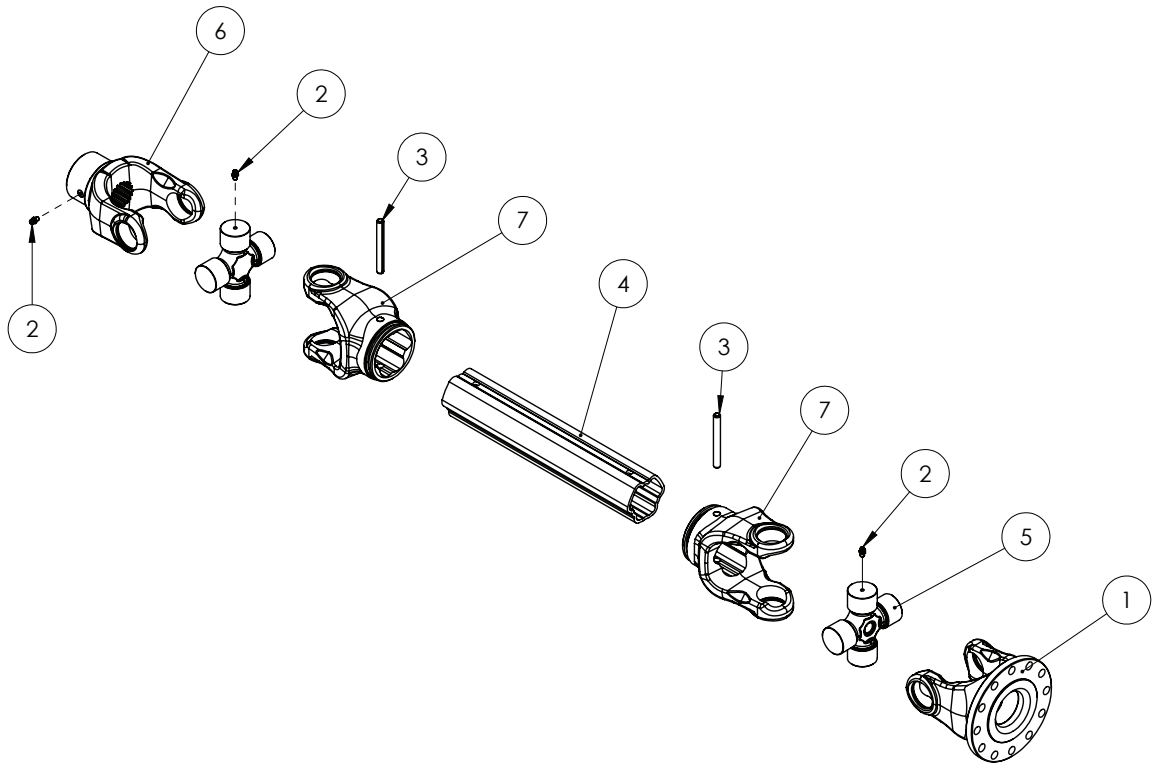

ITEM NO.	PART NUMBER	DESCRIPTION	QTY.
1	GA2700164	FLANGE, DRIVE SHAFT, 12 BOLT FLANGE TO UNI, EUROCARDAN 109T160	1
2	GA5050450	GREASE NIPPLE, 6mm	3
3	GA2700169	ROLL PIN, Ø 10mm X 90mm, 6331090	2
4	GA2700168	TUBE, DRIVE SHAFT, EUROCARDAN, 1810037D	1
5	GA2700165	UNIVERSAL JOINT, EUROCARDAN 1500020	2
6	GA2700167	YOKE, UNI TO 1 3/4" 20 TOOTH FEMALE SPLINE, EUROCARDAN 170T157	1
7	GA2700166	YOKE, UNI TO TUBE, EUROCARDAN, 170T067	2

Rear Axle - 3-4m Adjustable

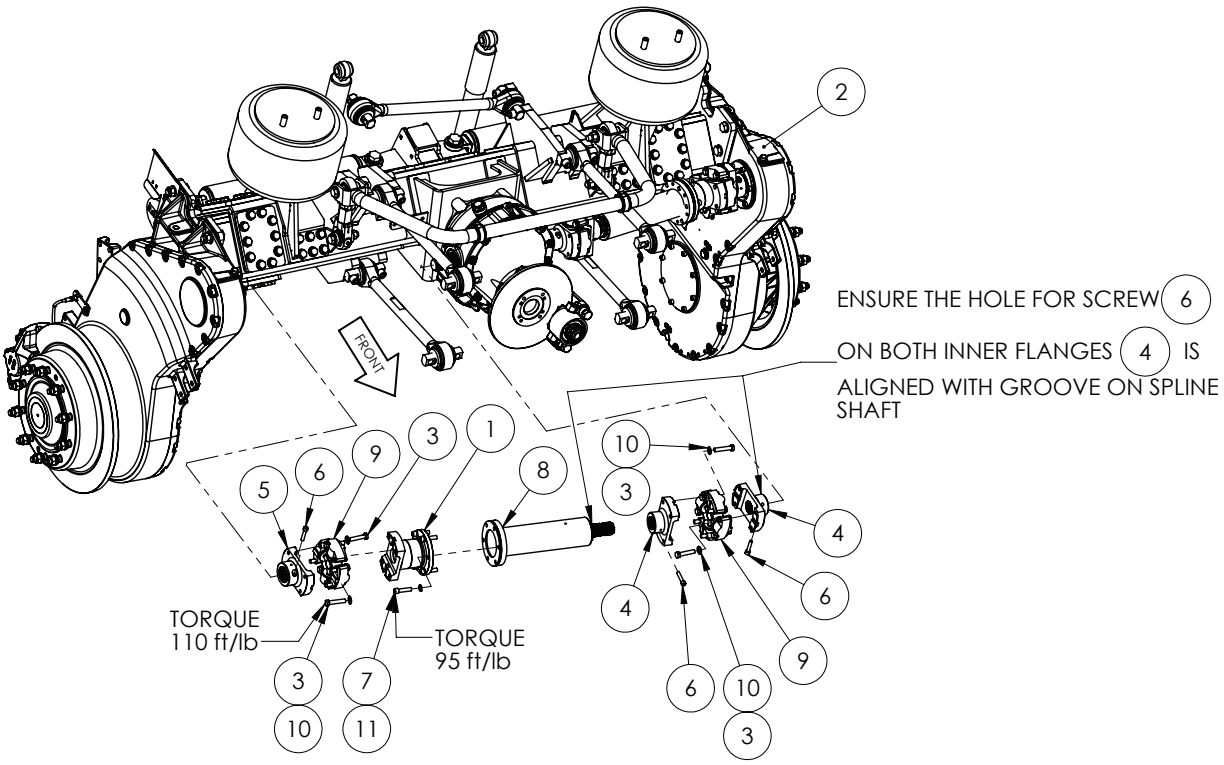

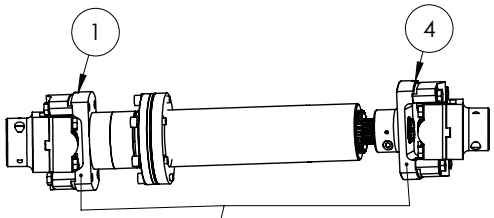

NOTE:
APPLY LOCTITE 243 TO ITEMS 1 AND 4

ENSURE ITEM 1 AND 4 FACES ARE PARALLEL, ONCE INSTALLED

ITEM NO.	PART NUMBER	DESCRIPTION	QTY.
1	GA4603830	ADAPTER, DRIVELINE, 3-4m ADJUSTABLE, G6, MY21	2
2	GA4908995-10	ASSEMBLY DRAWING ONLY, REAR, 3-4M ADJUSTABLE AXLE, G6, MY21	1
3	GA5055990	BOLT 1/2" UNF X 2.5IN	32
4	GA4551745	DRIVE FLANGE, DRIVE SHAFT, REAR, INNER, SUIT UNI JOINT 8.5C, 3-4m ADJUSTABLE AXLE, G6	4
5	GA4551720	DRIVE FLANGE, DRIVE SHAFT, REAR, OUTER, SUIT UNI JOINT 8.5C, 3-4m ADJUSTABLE AXLE, G6	2
6	GA5049990	SHCS M10 X 50 GR 12.9 ZP	6
7	GA5051470	SHCS M12 X 50 GR12.9 ZP	12
8	GA5070635	SPCC ADJUSTABLE AXLE 3 TO 4m DRIVE SHAFT ASSEMBLY	2
9	GA5074025	UNIVERSAL JOINT MECHANICS TYPE 8.5C	4
10	GA5017673	WASHER 1/2" HIGH TENSILE	32
11	GA5000575	WASHER 12mm SPRING SS	12

Rear Axle - Sway Bar Mounts

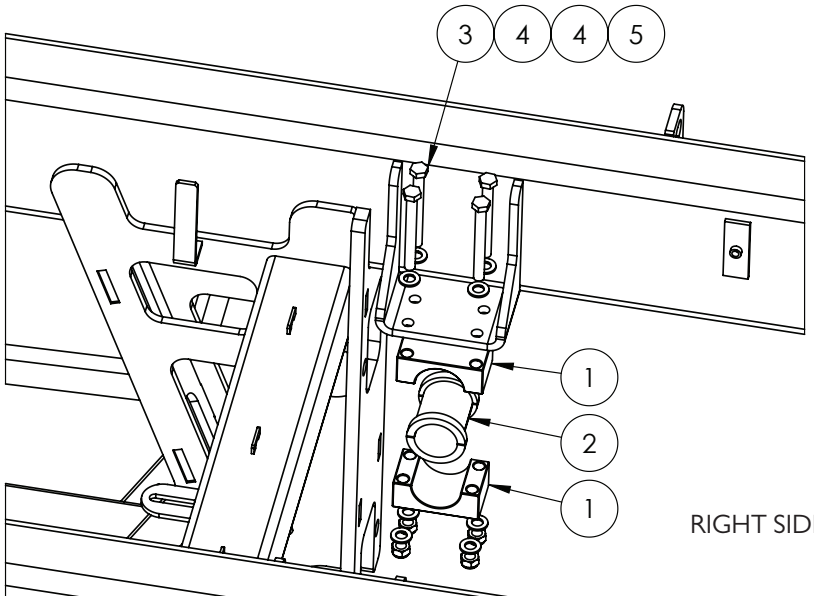

RIGHT SIDE SHOWN

ITEM NO.	PART NUMBER	DESCRIPTION	QTY.
1	GA4551270	CLAMP, SWAY BAR, CHASSIS MOUNT	4
2	GA4550710	BUSH, LOWER SWAY BAR, 48MM ID NYLON	2
3	GA5011199	BOLT M12 X 110 GR8.8 ZP	8
4	GA5000577	WASHER 12MM FLAT SS HD	16
5	GA5012461	NUT M12 NYLOC ZP	8

Suspension - Miscellaneous

PANHARD ROD SHIMS

PART NUMBER	DESCRIPTION
GA4537165	PANHARD SHIM 1MM
GA4537170	PANHARD SHIM 3MM
GA4537175	PANHARD SHIM 5MM

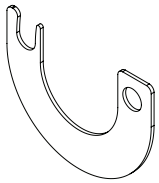

TORQUE ROD SHIMS

PART NUMBER	DESCRIPTION
GA4505076	SHIM, SPACER BLOCK TORQUE ROD SUSPENSION ARM, 1MM
GA4505075	SHIM, SPACER BLOCK TORQUE ROD SUSPENSION ARM, 5MM

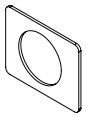

FRONT SUSPENSION SERVICE PARTS

PART NUMBER	DESCRIPTION
GA5069825	BUSH, SUSPENSION LINK END REPLACEMENT, 3/4" BOLT HOLES, TS38750, ATRO

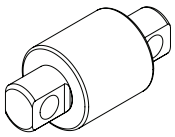

REAR SUSPENSION TOOL

PART NUMBER	DESCRIPTION
PT59-59100 / PT00-52100	ATRO BUSH TOOL

Rear Axle - Differential

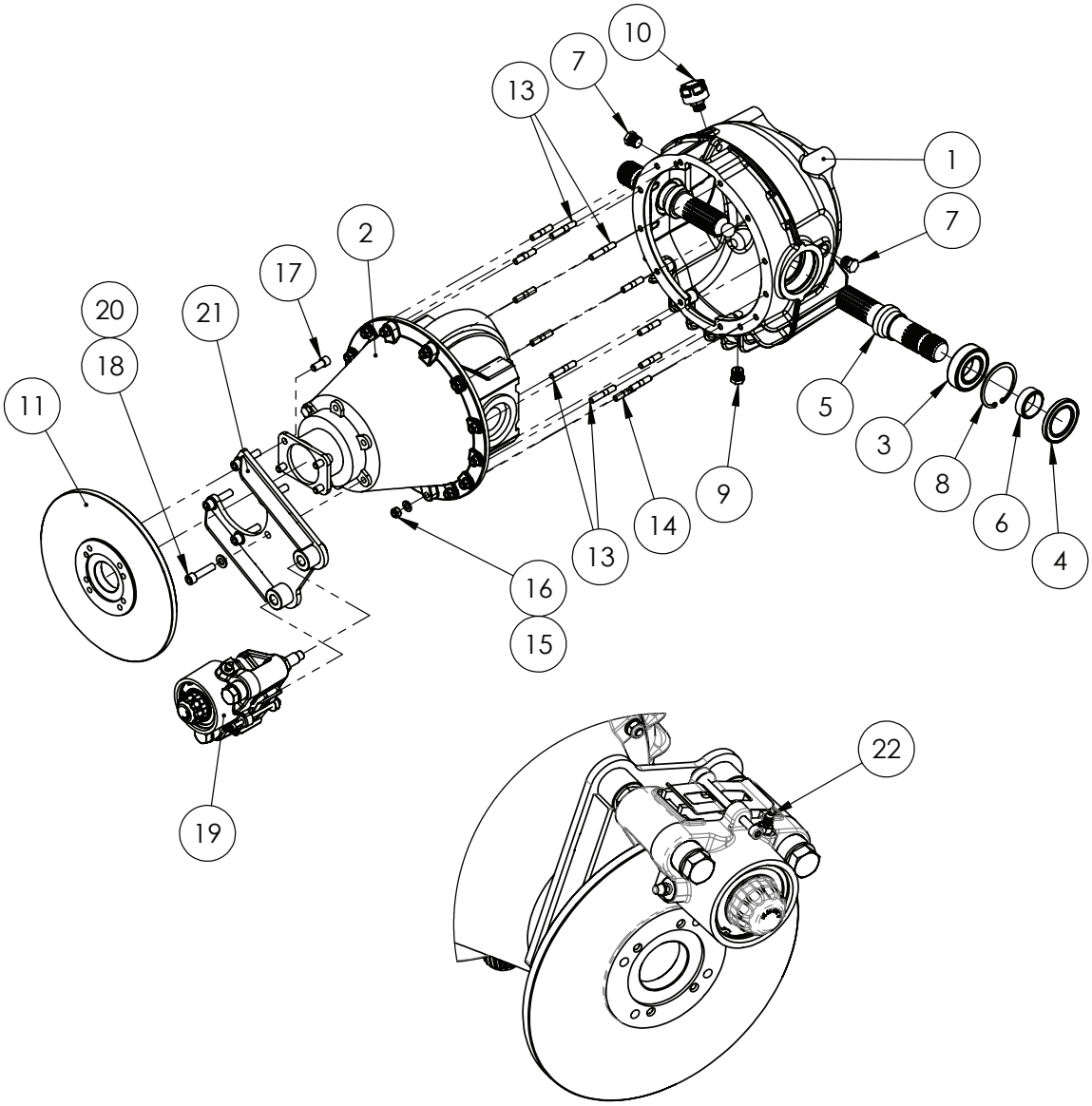

^ See Chapter 23 'Brakes' for sub-assembly

Continued over page

Rear Axle - Differential

PINION SEAL

PART NUMBER	DESCRIPTION
GA5007831	SEAL, DIFFERENTIAL PINION INPUT, ISUZU DIFF

ITEM NO.	PART NUMBER	DESCRIPTION	QTY.
1	GA2700063	"DIFFERENTIAL HOUSING SUIT ISUZU CENTRE, CAST ALUMINIUM"	1
2	GA5010610	"DIFF CENTRE, 5.125:1 RATIO 41/8 TOOTH COUNT, LSD, ISUZU"	1
3	GA5007959	85X45X23 BEARING 2209E	2
4	GA5048455	OIL SEAL - 85X55X8	2
5	GA4550620	SHAFT, DIFF OUTPUT, SPLINE, 2017	2
6	DL30	SPACER RING, SP DROP LEG DIFF OUTPUT SHAFT	2
7	GA5050670	1/2" BRASS PLUG	2
8	GA5072635	CIRCLIP, INTERNAL, SUIT 85MM BORE, 3MM THICK	2
9	GA5048560	PLUG, MAGNETIC, 1/2” BSPT MALE	1
10	GA5066770	AIR BREATHER SCREW IN STYLE 1/2"	1
11	GA4551265	PARK BRAKE DISC ROTOR, G6 MY20	1
12	GA5055935	"LUBRICANT, ISUZU DIFF, BREAK-IN ADDITIVE, ACDELCO, 889003300, 118ML"	1
13	GA0500050	STUD, M10 X 60 WITH 20MM LONG TAP END	4
14	GA0500049	STUD, M10 X 50 WITH 20MM LONG TAP END	9
15	GA5000117	WASHER 10MM FLAT SS HD	13
16	GA5000141	NUT M10 NYLOC ZP	13
17	GA5070440	"SHCS M12 X 25, MACHINED HEAD DIAMETER 16MM , SUIT ISUZU DIFF INPUT, GR12.9"	4
18	GA5051470	SHCS M12 X 50 GR12.9 ZP	5
19	GA2700096	"BRAKE CALIPER, PARK, SPRING APPLIED, HYDRAULIC RELEASE, KNOTT"	1
20	GA5000577	WASHER 12MM FLAT SS HD	5
21	GA4602430	"PARK BRAKE CALIPER MOUNT BRACKET, REAR AXLE, G6, MY20"	1
22	GA3500713	"HYDRAULIC ADAPTER, NIPPLE, M10X1 MALE X 7/16""-20 UNF MALE,HANSA FLEX, RA1876-0710 (GE HMO 10 HJ 04)"	1

^ See Chapter 23 ‘Brakes’ for sub-assembly

Rear Drop Leg - Lower Assembly

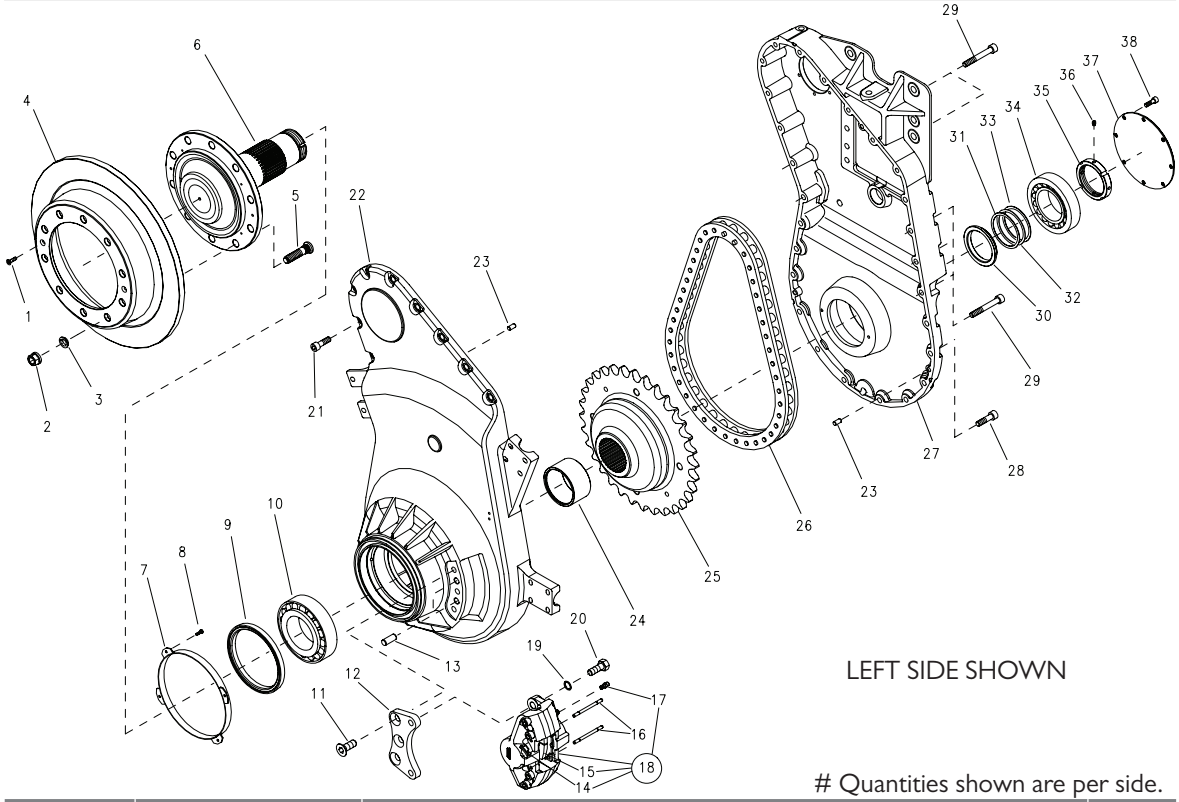

Quantities shown are per side.

ITEM NO.	PART NUMBER	DESCRIPTION	QTY.
1	GA5073260	CSCS, M8 X 25 GR10.9	2
2	GA5073265	WHEEL NUT, M22 X 1.5	10
3	-	NOT USED	-
4	GA5070065	BRAKE DISC, DROP LEG	1
5	GA5073275	STUD, M22 X 1.5 X 90 GR10.9, DROP LEG, REAR	10
6	GA5073280	SHAFT, OUTPUT, WITH WHEEL HUB, DROP LEG, REAR	1
7	GA5073285	OUTPUT SHAFT SEAL PROTECTION RING, DROP LEG, REAR	1
8	GA5073290	SHCS, M6 X 14, GR8.8	4
9	GA5073295	SEAL, OIL, CASSETTE, T3 190X220X16/18 NBR, DROP LEG, REAR	1
10	GA1700002	BEARING, TAPER ROLLER 110 ID, 200 OD, SKF 32222 J2	1
11	GA0500051	CSCS, M20 X 50, ZP GR10.9	3
12	GA5073300	PLATE, BRAKE CALIPER MOUNT, DROP LEG, REAR	1
-	GA4406810	SHIM, BRAKE CALIPER MOUNT PLATE, 3MM	-
13	GA5073305	DOWEL PIN, M18 X 40	2
14	GA5055645	BRAKE PAD BACKING, ANTI SQUEAL, SELF ADHESIVE, PACK OF 4	1
15	GA5006305	BRAKE PADS, SUIT JCB & STILFRENI CALIPER, 2 PADS = 1 SET	1
16	GA5051430	PIN KIT T/S STILFRENI CALIPER (1 SET)	1
17	GA5073310	BLEEDER VALVE, M10X1, BRAKE CALIPER, STILFRENI	1
18	GA5016069	STILFRENI BRAKE CALIPER FOR SP	1
19	GA5073315	WASHER, FLAT, 21 X 37 X 3 MM, ZP	2

Continued over page

Rear Drop Leg - Lower Assembly

ITEM NO.	PART NUMBER	DESCRIPTION	QTY.
20	GA5073320	SHCS, M20 X 50, FINE THREAD 1.5P, GR10.9	2
21	GA5000925	SHCS M16 X 40 GR12.9 ZP	9
22	-	OUTER CASING	1
23	GA5073325	DOWEL PIN, M12 X 24	3
24	GA5073330	SPACER RING, LONG, OUTPUT SHAFT, DROP LEG, REAR	1
25	GA5073335	SPROCKET, WITH SPLINED HUB, 32 TOOTH, DROP LEG, REAR	1
26	GA5059995	CHAIN, SUPER 140HT, TSUBAKI, NO JOINING LINK, LOWER DROP LEG (14 LINK)	1
27	-	INNER CASING	1
28	GA5000935	SHCS M16 X 50 GR12.9 ZP	12
29	GA5073340	SHCS M16 X 110 GR12.9 ZP	5
30	GA5073345	SPACER RING, SHORT, OUTPUT SHAFT, DROP LEG, REAR	1
31	GA5073350	SHIM, OUTPUT SHAFT, 0.15MM, DROP LEG, REAR	2
32	GA5073355	SHIM, OUTPUT SHAFT, 0.XXMM, DROP LEG, REAR	4
33	GA5073360	SHIM, OUTPUT SHAFT, 0.30MM, DROP LEG, REAR	2
34	GA1700006	BEARING, TAPER ROLLER 100 ID, 180 OD, SKF 32220 J2	1
35	GA5073365	RING NUT, DROP LEG, REAR	1
36	GA5073370	GRUB SCREW, M10 X 16	1
37	GA5073375	Plate, Cover, Output Shaft, Drop Leg, Rear	1
38	GA5071085	SHCS M10 x 25 GR12.9 ZP	8

Rear Drop Leg - Upper Assembly

Quantities shown are per side.

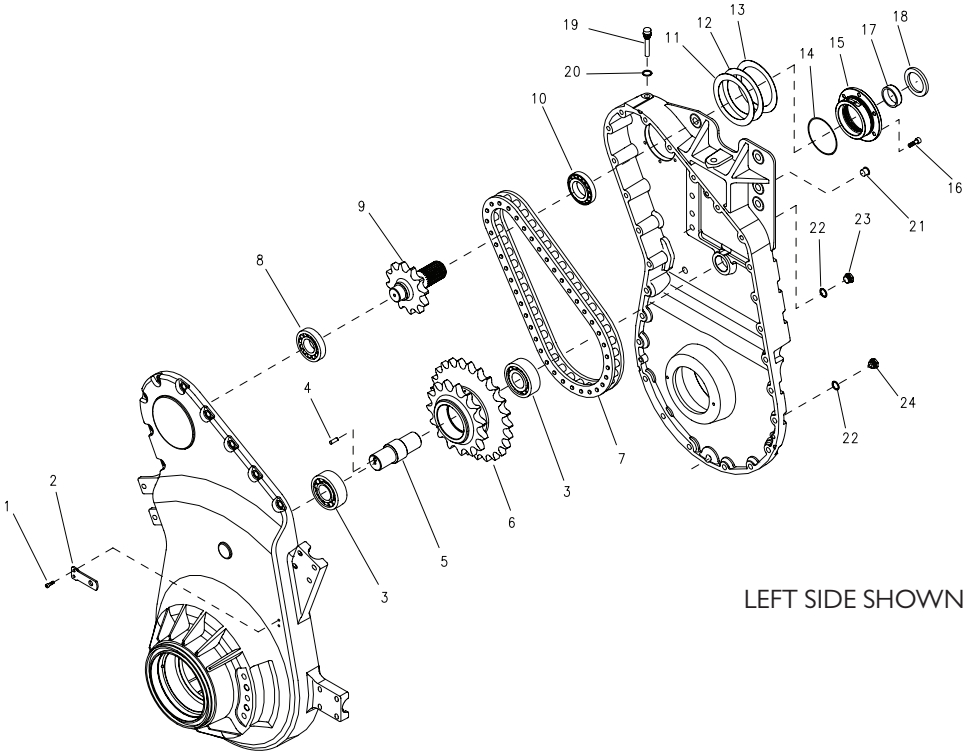

Continued over page

Rear Drop Leg - Upper Assembly

ITEM NO.	PART NUMBER	DESCRIPTION	QTY.
1	GA5050690	SHCS M8 X 16 GR12.9 ZP	2
2	GA5073380	PLATE, BRAKE HOSE FIXING, DROP LEG, REAR	1
3	GA1700003	BEARING, SINGLE ROW CYLINDRICAL ROLLER ID 50 OD 110 NJ 2310 CP	2
4	GA0500009	M10 X 20 DOWEL PIN	1
5	GA5073385	IDLER SHAFT, DROP LEG, REAR, G5 G6, DROMOS	1
6	GA4660490	15-25 TOOTH IDLER SPROCKET DROP LEG 2015	1
7	GA5014599	CHAIN, SUPER 120HT, TSUBAKI, NO JOINING LINK, UPPER DROP LEG (19 LINK)	1
8	GA1700004	BEARING, TAPER ROLLER 45 ID, 100 OD, SKF 30309 J2Q	1
9	GA4552945	SHAFT REAR DROPLEG INPUT 25 TOOTH SPLINE	1
10	GA1700005	BEARING, TAPER ROLLER 55 ID, 100 OD, SKF 30211 J2Q	1
11	GA5073390	SHIM, INPUT SHAFT BEARING HOLDER, 0.15MM, DROP LEG, REAR	2
12	GA5073395	SHIM, INPUT SHAFT BEARING HOLDER, 0.20MM, DROP LEG, REAR	4
13	GA5073400	SHIM, INPUT SHAFT BEARING HOLDER, 0.30MM, DROP LEG, REAR	2
14	GA5073405	O-RING, 2-158 - 120.32 X 2.62 NBR 70	1
15	GA5073410	BEARING HOLDER, INPUT SHAFT, DROP LEG, REAR	1
16	GA5071085	SHCS M10 X 25 GR12.9 ZP	6
17	GA5073415	RING RACE, OIL SEAL , INPUT SHAFT, DROP LEG, REAR	1
18	GA5073420	OIL SEAL, 65 X 90 X 7, INPUT SHAFT, DROP LEG, REAR	1
19	*	REPLACED WITH REMOTE BREATHER GA5066770	1
20	GA5073430	WASHER, COPPER GASKET, 18 X 24 X 1.5 MM	1
21	-	TEMPORARY PLASTIC PLUG - NOT NEEDED	1
22	GA5073435	WASHER, COPPER GASKET, 22 X 28 X 1.5 MM	2
23	GA5073440	PLUG, DRAIN, NOT MAGNETIC, M22 X 1.5, DROP LEG, REAR	1
24	GA5073445	PLUG, DRAIN, MAGNETIC, M22 X 1.5, DROP LEG, REAR	1

Quantities shown are per side.

Ride Height Valve - Front

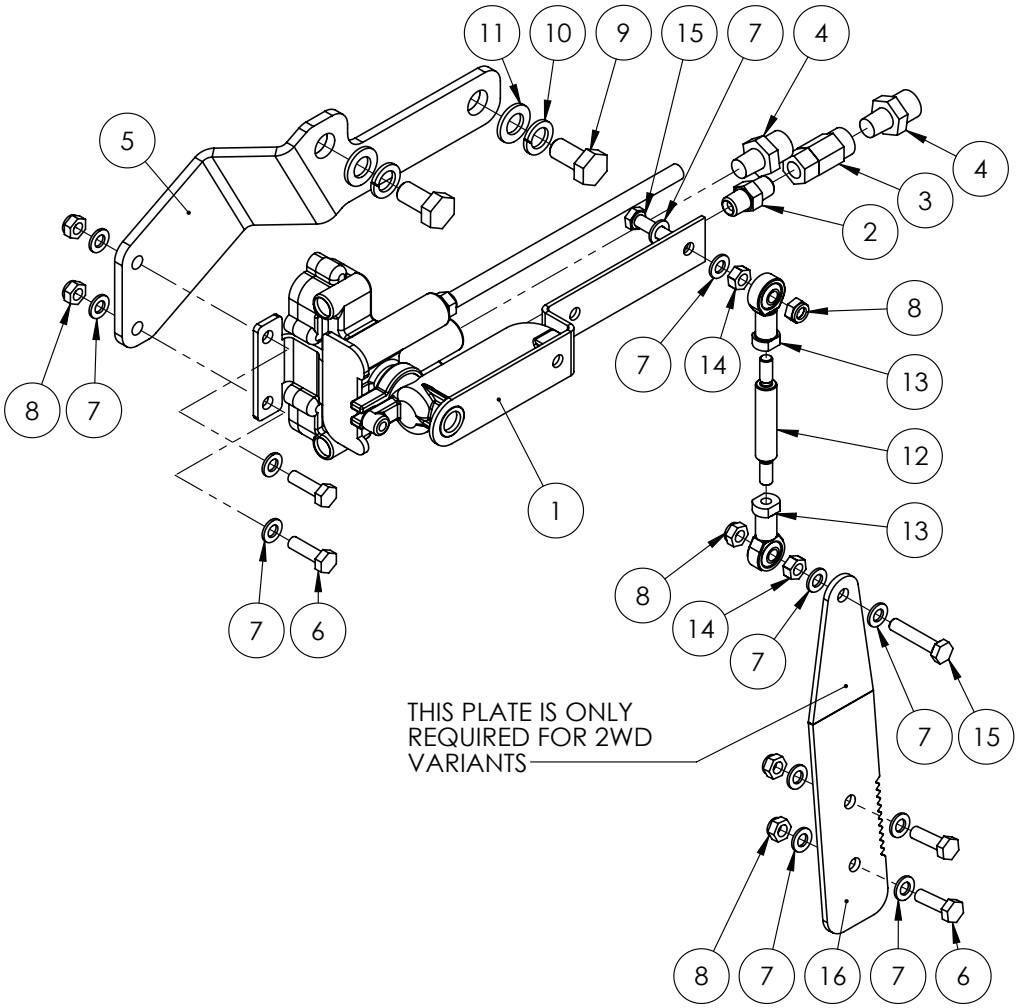

ITEM NO.	PART NUMBER	DESCRIPTION	QTY.
1	GA2500003	RIDE HEIGHT VALVE	1
2	GA5025395	PNEUMATIC ADAPTOR, NIPPLE, 1/8” NPT MALE X 1/8” NPT MALE	1
3	GA5018147	CHECK VALVE INLINE 1/8" NPT FEMALE	1
4	GA5078523	AIR FITTING, STRAIGHT, 3/8” TUBE, 1/8” NPT MALE, BRASS	2
5	GA4406180	PLATE, RIDE HEIGHT VALVE MOUNT, TRANSMISSION	1
6	GA5004065	BOLT M6 X 20 GR8.8 ZP	4
7	GA5004437	WASHER 6MM FLAT SS	12
8	GA5048115	NUT M6 NYLOC ZP	6
9	GA5006113	BOLT M10 X 20 GR8.8 ZP	2
10	GA5000137	WASHER 10MM SPRING SS	2
11	GA5000117	WASHER 10MM FLAT SS HD	2
12	GA4551275	LINK ROD, RIDE HEIGHT	1
13	GA5052725	ROD END 6MM FEMALE	2
14	GA5049030	NUT M6 SS	2
15	GA5004079	SET SCREW M6 X 30 GR8.8 ZP	2
16	GA4406655	PLATE, RIDE HEIGHT LINK, FRONT AXLE, 2WD	1

Ride Height Valves - Rear

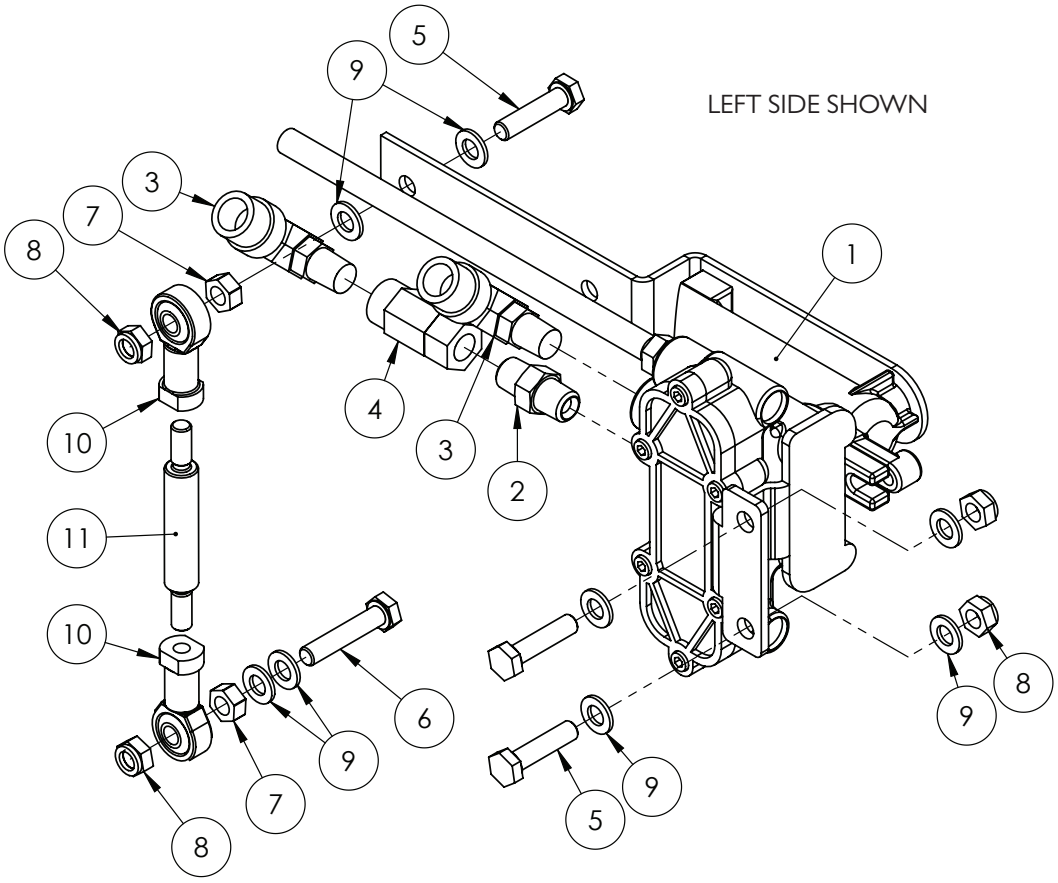

ITEM NO.	PART NUMBER	DESCRIPTION	QTY.
1	GA2500003	RIDE HEIGHT VALVE	1
2	GA5025395	PNEUMATIC ADAPTOR, NIPPLE, 1/8” NPT MALE X 1/8” NPT MALE	1
3	GA5078525	AIR FITTING, ELBOW, SWIVEL, 3/8” TUBE, 1/8” NPT MALE, PUSH IN, BRASS	2
4	GA5018147	CHECK VALVE INLINE 1/8" NPT FEMALE	1
5	GA5011401	SET SCREW M6 X 25 SS A2-70	3
6	GA5004079	SET SCREW M6 X 30 GR8.8 ZP	1
7	GA5049030	NUT M6 SS	2
8	GA5048115	NUT M6 NYLOC ZP	4
9	GA5004437	WASHER 6MM FLAT SS	8
10	GA5052725	ROD END 6MM FEMALE	2
11	GA4551275	LINK ROD, RIDE HEIGHT	1

Quantities shown are per side.

Drive Shafts - 2WD

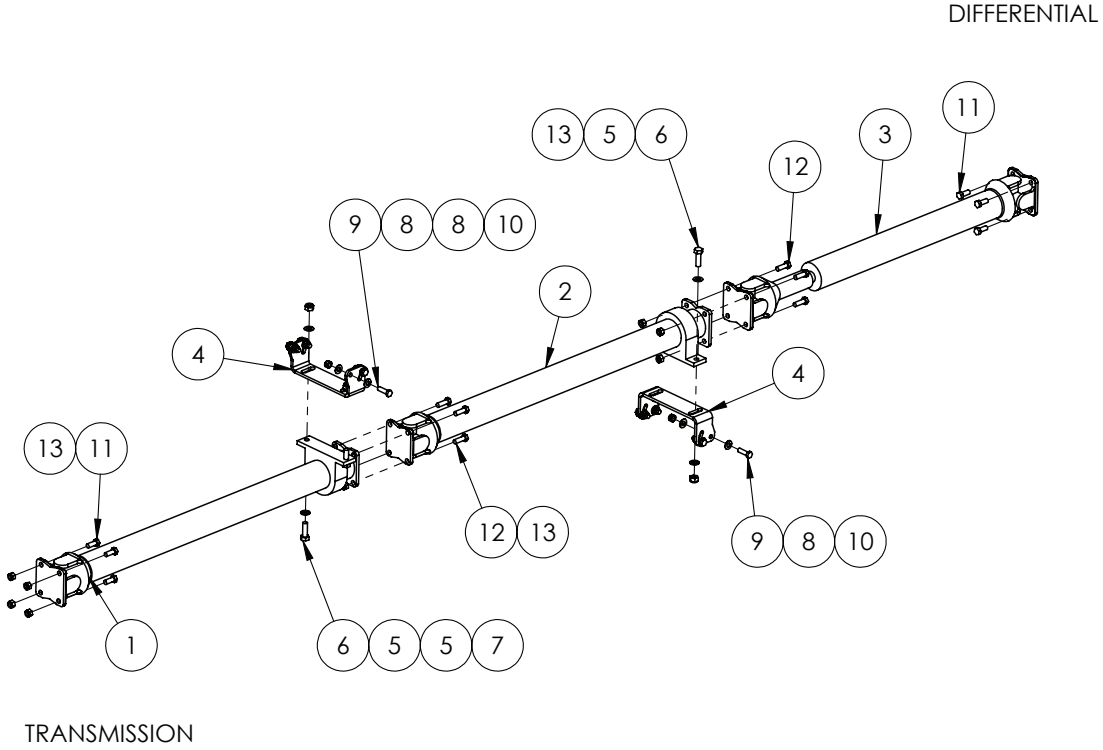

ITEM NO.	PART NUMBER	DESCRIPTION	QTY.
-	GA5007003	CENTRE BEARING ASSEMBLY, 40MM ID, SLOTTED RUBBER, STANDARD DUTY, G4 G6	-
A	GA5017113	UNI JOINT KIT 1480 SERIES	
ITEM NO.	PART NUMBER	DESCRIPTION	QTY.
1	GA5048226	DRIVE SHAFT 2WD 2011 FRONT	1
2	GA5048227	DRIVE SHAFT 2WD 2011 MIDDLE	1
3	GA5048228	DRIVE SHAFT 2WD 2011 REAR	1
4	GA4536225	MOUNT CENTRE BEARING PLATE	2
5	GA5050325	WASHER 14MM FLAT SS	8
6	GA5000343	BOLT M14 X 45 GR8.8 ZP	4
7	GA5012427	NUT M14 NYLOC ZP	4
8	GA5000577	WASHER 12MM FLAT SS HD	16
9	GA5051725	BOLT M12 X 1.5P X 40 GR8.8 ZP	8
10	GA5000141	NUT M10 NYLOC ZP	8
11	GA5006045	BOLT 1/2 UNF X 1 1/4 GR8 ZP	8
12	GA5009781	BOLT 1/2 UNF X 1 1/2 GR8 ZP	8
13	GA5049605	NUT 1/2 UNF NYLOC ZP	12

Drive Shafts & Transfer Case - 4WD

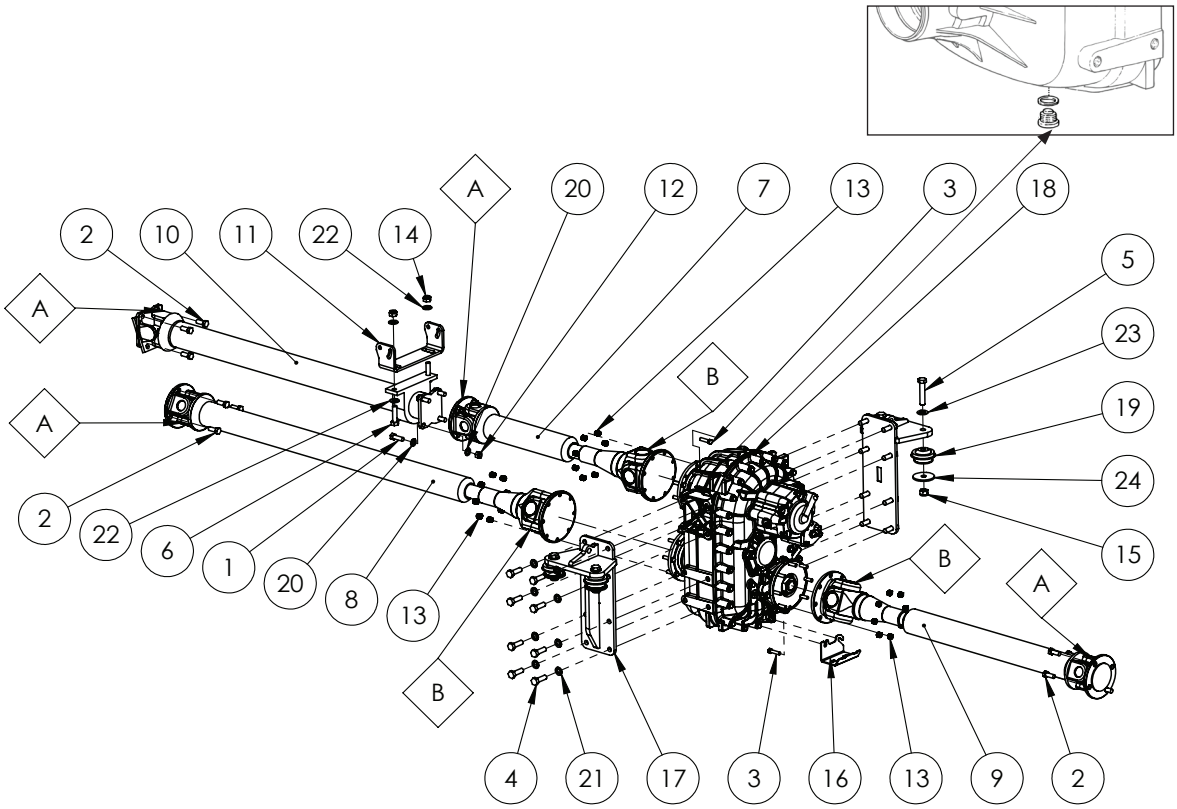

ITEM NO.	PART NUMBER	DESCRIPTION	QTY.
A	GA5017113	UNIVERSAL JOINT CROSS, 1480 SERIES	4
B	GA2700084	UNIVERSAL JOINT CROSS, 1610 SERIES	3
-	GA5007003	CENTRE BEARING ASSEMBLY, 40MM ID, SLOTTED RUBBER, STANDARD DUTY, G4 G6	-
-	GA2700072	TRANSFER CASE, FULL TIME 4WD WITH VARIABLE DIFFERENTIAL (33:67) AND LOCK, SAE 1600 FLANGES, G4.7 G5 G6, MARMON HERRINGTON	1
	GA5078531	SEALING RING, PLUG, TRANSFER CASE	-
	GA5078532	DRAIN PLUG NO SEAL RING, TRANSFER CASE	-
1	GA5006167	BOLT 1/2 UNC X 1 1/2 GR8 ZP	4
2	GA5006045	BOLT 1/2 UNF X 1 1/4 GR8 ZP	12
3	GA0500032	BOLT 3/8" X 1 1/2, UNF, ZP, GR8	24
4	GA5000343	BOLT M14 X 45 GR8.8 ZP	16
5	GA5011307	BOLT M16 X 80 GR8.8 ZP	4
6	GA5073685	BOLT M14 X 55 GR8.8 ZP	2
7	GA2700073	DRIVE SHAFT, CENTRE BEARING TO MARMON HERRINGTON TRANSFER CASE, G4.7, G5, G6, 2018	1
8	GA2700075	DRIVE SHAFT, FRONT AXLE TO MARMON HERRINGTON TRANSFER CASE, G4.7, G5, G6, 2018	1

Continued over page

Drive Shafts & Transfer Case - 4WD

ITEM NO.	PART NUMBER	DESCRIPTION	QTY.
9	GA2700074	DRIVE SHAFT, REAR AXLE TO MARMON HERRINGTON TRANSFER CASE, G4.7, G5, G6, 2018	1
10	GA5048226	DRIVE SHAFT 2WD 2011 FRONT	1
11	GA4536225	MOUNT CENTRE BEARING PLATE	1
12	GA5050580	NUT 1/2 UNC NYLOC ZP	4
13	GA0500026	NUT 3/8", NYLOC, ZP, UNF	24
14	GA5012427	NUT M14 NYLOC ZP	2
15	GA5001029	NUT M16 NYLOC ZP	4
16	GA4403935	PLATE, HOSE SUPPORT BRACKET, 4WD TRANSFER CASE, MARMON HERRINGTON	1
17	GA4661820	TRANSFER CASE MOUNT, 4WD G4.7, G5, G6, 2018	2
18	GA2700072	TRANSFER CASE, FULL TIME 4WD WITH VARIABLE DIFFERENTIAL (33:67) AND LOCK, SAE 1600 FLANGES, G4.7 G5 G6, MARMON HERRINGTON MVG750PD	1
19	GA5070020	VIBRATION ISOLATOR - 80MM	4
20	GA5017655	WASHER 1/2 X 1 1/4 FLAT SS	8
21	GA5050325	WASHER M14 FLAT SS	16
22	GA5066235	WASHER M14 FLAT ZP HT YELLOW	4
23	GA5001043	WASHER M16 FLAT SS HD	4
24	GA4502820	WASHER, 70MM OD X 16.5MM ID X 5MM THICK	4

Transfer Case - 4WD - Axle Engage

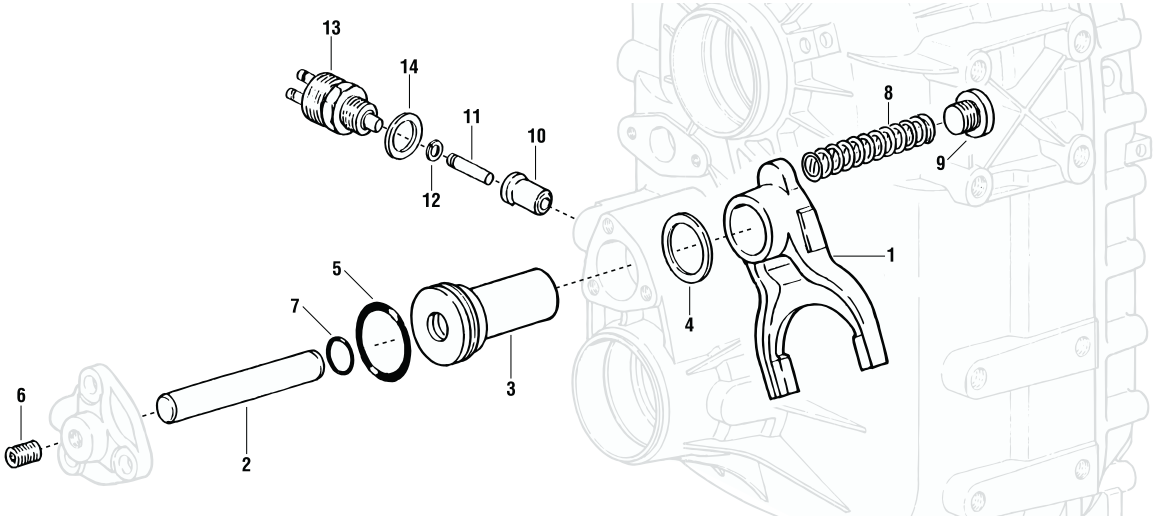

ITEM NO.	PART NUMBER	DESCRIPTION	QTY.
1	MVG751107	SHIFT FORK	1
2	MVG751108	PISTON ROD	1
3	MVG751109	PISTON	1
4	MVG751110A	30 X42 .10MM SHIM	#
	MVG751110B	30 X42 .20MM SHIM	#
	MVG751110C	30 X42 .50MM SHIM	#
	MVG751110D	30 X42 1.0MM SHIM	#
5	MVG751114	SEALING RING	1
6	MVG751115	THREADED PIN	1
7	MVG751116	SEALING RING	1
8	MVG751117	PRESSURE SPRING	1
9	MVG751118	SCREW PLUG	1
10	MVG751119	BUSHING	1
11	MVG751120	PIN	1
12	MVG121125	RETAINING RING	1
13	GA5078540	PRESSURE SWITCH, NC, AXLE ENGAGE, TRANSFER CASE	1
14	MVG121040	SEALING RING	1

Quantities vary.

Transfer Case - 4WD - Rear Housing

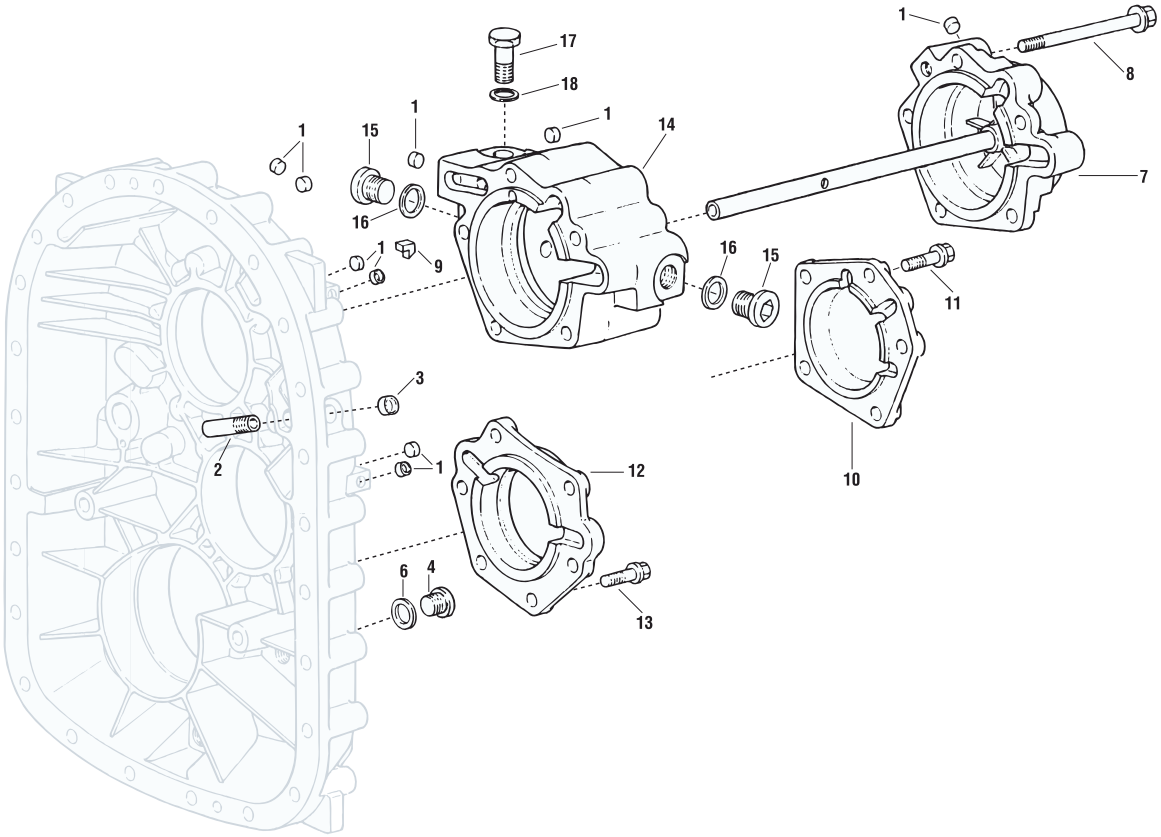

ITEM NO.	PART NUMBER	DESCRIPTION	QTY.
1	MVG751009	CORE HOLE PLUG	7
2	MVG751010	OIL TUBE	1
3	MVG751011	CORE HOLE PLUG	1
4	MVG751012	FILL PLUG	1
5	-	-	-
6	GA5078531	SEALING RING, PLUG, TRANSFER CASE	1
7	MVG751014	CLOSING COVER	1
8	11504610	M10X125 HEXAGON HEAD BOLT	5
9	MVG751015	KEY	1
10	MVG751016	BEARING COVER	1
11	11500878	M10X35 HEXAGON HEAD BOLT	5
12	MVG751018	BEARING COVER	1
13	11500878	M10X35 HEXAGON HEAD BOLT	6
14	MVG751020	BEARING HOUSING	1
15	GA5078533	PLUG, BEARING HOUSING, TRANSFER CASE	2
16	GA5078531	SEALING RING, PLUG, TRANSFER CASE	2
17	MVG751023	HEXAGON HEAD SCREW	1
18	MVG751024	SEALING RING	1

Transfer Case - 4WD - Power Take Off

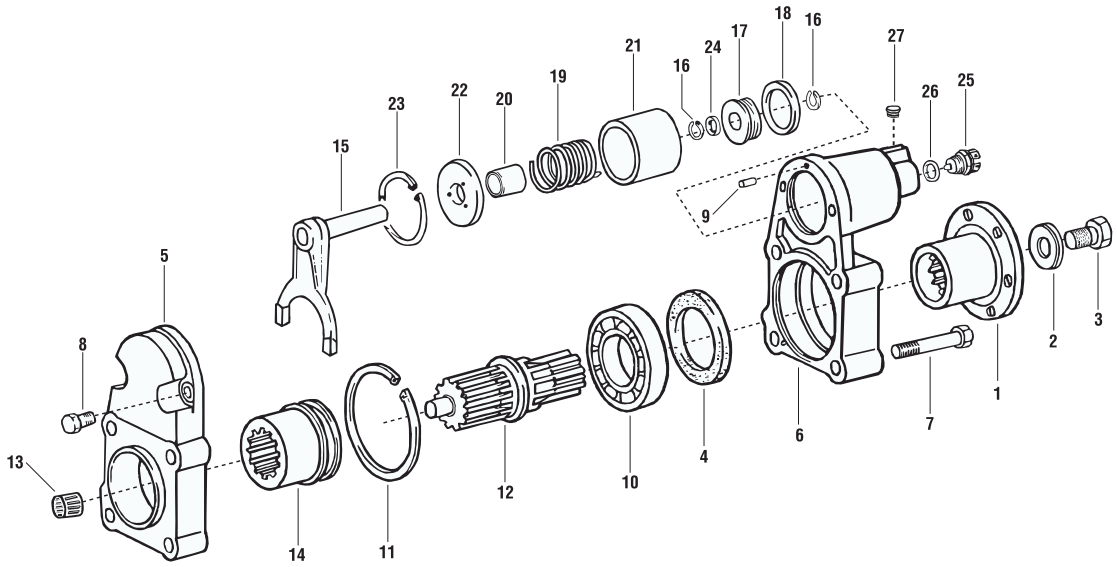

ITEM NO.	PART NUMBER	DESCRIPTION	QTY.
1	MVG121153	FLANGE 1410	1
2	MVG121163	WASHER	1
3	11500731	M12X35 BOLT	1
4	GA5078535	OIL SEAL, POWER TAKE OFF, TRANSFER CASE	1
5	MVG121151	HOUSING FRONT	1
6	MVG121150	HOUSING REAR	1
7	11500796	M12X100 BOLT	4
8	11500713	M8X20 BOLT	2
9	MVG121154	PIN	2
10	MVG121155	BEARING SHAFT	1
11	MVG121156	SNAP RING	1
12	MVG121157	OUTPUT SHAFT	1
13	MVG121158	NEEDLE BEARING CAGED	1
14	MVG121159	SHIFTING SLEEVE	1
15	MVG121160	SHIFTING FORK	1
16	MVG121001	SNAP RING	2
17	MVG121037	PISTON	1
18	MVG121038	GASKET	1
19	MVG121033	SPRING	1
20	MVG121032	DISTANCE SLEEVE	1
21	MVG121034	BUSHING	1
22	MVG121031	WASHER	1
23	MVG121161	SNAP RING	1
24	MVG121036	O-RING	1
25	GA5078540	PRESSURE SWITCH, NC, AXLE ENGAGE, TRANSFER CASE	1
26	MVG121040	GASKET	1
27	MVG121162	PLUG	1

Transfer Case - 4WD - Input Shaft

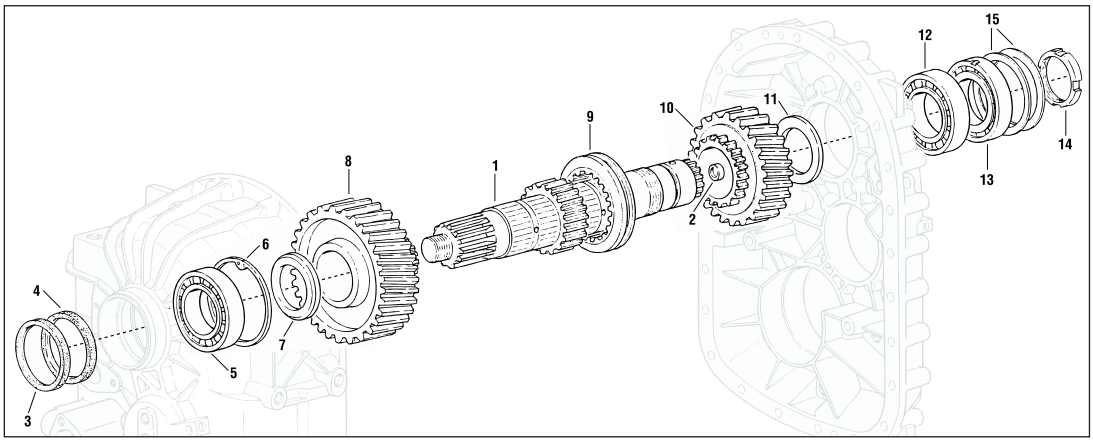

ITEM NO.	PART NUMBER	DESCRIPTION	QTY.
1	MVG751046	INPUT SHAFT	1
2	MVG751047	BAFFLE WASHER	1
3	GA5078537	OIL SEAL OUTER, INPUT/OUTPUT SHAFT, TRANSFER CASE	1
4	GA5078538	OIL SEAL INNER, INPUT/OUTPUT SHAFT, TRANSFER CASE	1
5	MVG751050	ROLLER BEARING	1
6	MVG751051	RETAINING RING	1
7	MVG751052	THRUST WASHER	1
8	MVG751053	DRIVE GEAR	1
9	MVG751054	SHIFTING SLEEVE	1
10	MVG751055	DRIVE GEAR	1
11	MVG751056	THRUST WASHER	1
12	MVG751050	ROLLER BEARING	1
13	MVG751058	ANGULAR BALL BEARING	1
14	MVG751059	PLAIN NUT	1
15	MVG121017A	SHIM .10MM	#
	MVG121017B	SHIM .20MM	#
	MVG121017C	SHIM .50MM	#
	MVG121017D	SHIM .15MM	#

Quantities vary.

Transfer Case - 4WD - Ouput Shaft

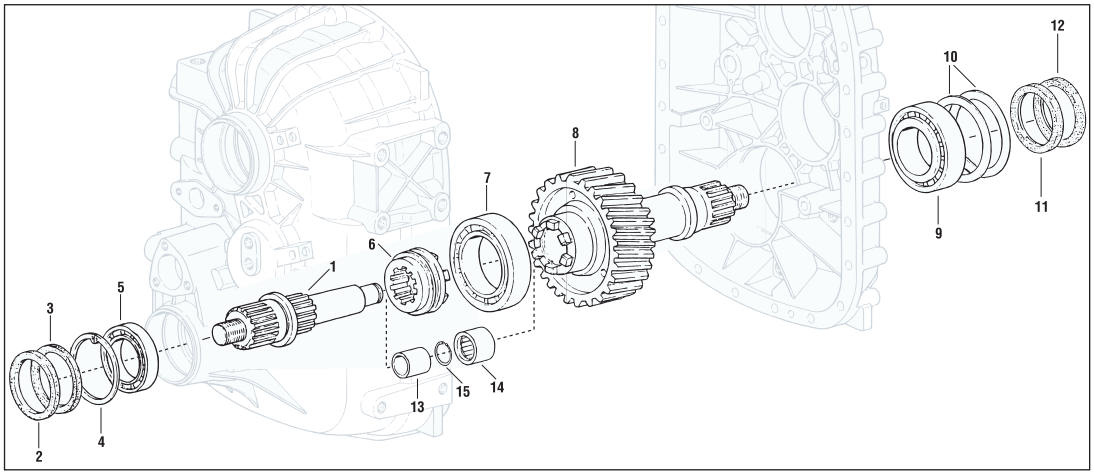

ITEM NO.	PART NUMBER	DESCRIPTION	QTY.
1	MVG751078	FRONT OUTPUT SHAFT	1
2	GA5078537	OIL SEAL OUTER, INPUT/OUTPUT SHAFT, TRANSFER CASE	1
3	GA5078538	OIL SEAL INNER, INPUT/OUTPUT SHAFT, TRANSFER CASE	1
4	MVG751070	RETAINING RING	1
5	MVG751071	BALL BEARING	1
6	MVG751072	SHIFTING SLEEVE	1
7	MVG751073	ROLLER BEARING	1
8	MVG751079	REAR OUTPUT SHAFT	1
9	MVG751075	ROLLER BEARING	1
10	MVG201046A	SHIM .60MM	#
	MVG201046B	SHIM .80MM	#
	MVG201046C	SHIM 1.0MM	#
	MVG121064A	SHIM .10MM	#
	MVG121064B	SHIM .20MM	#
	MVG121064C	SHIM .40MM	#
	MVG121064D	SHIM .15MM	#
11	GA5078538	OIL SEAL INNER, INPUT/OUTPUT SHAFT, TRANSFER CASE	1
12	GA5078537	OIL SEAL OUTER, INPUT/OUTPUT SHAFT, TRANSFER CASE	1
13	MVG751080	INSIDE RING	1
14	MVG751081	NEEDLE SLEEVE	1
15	MVG751082	RETAINING RING	1

Quantities vary.

Chapter 22

CABIN

Cabin - Claas

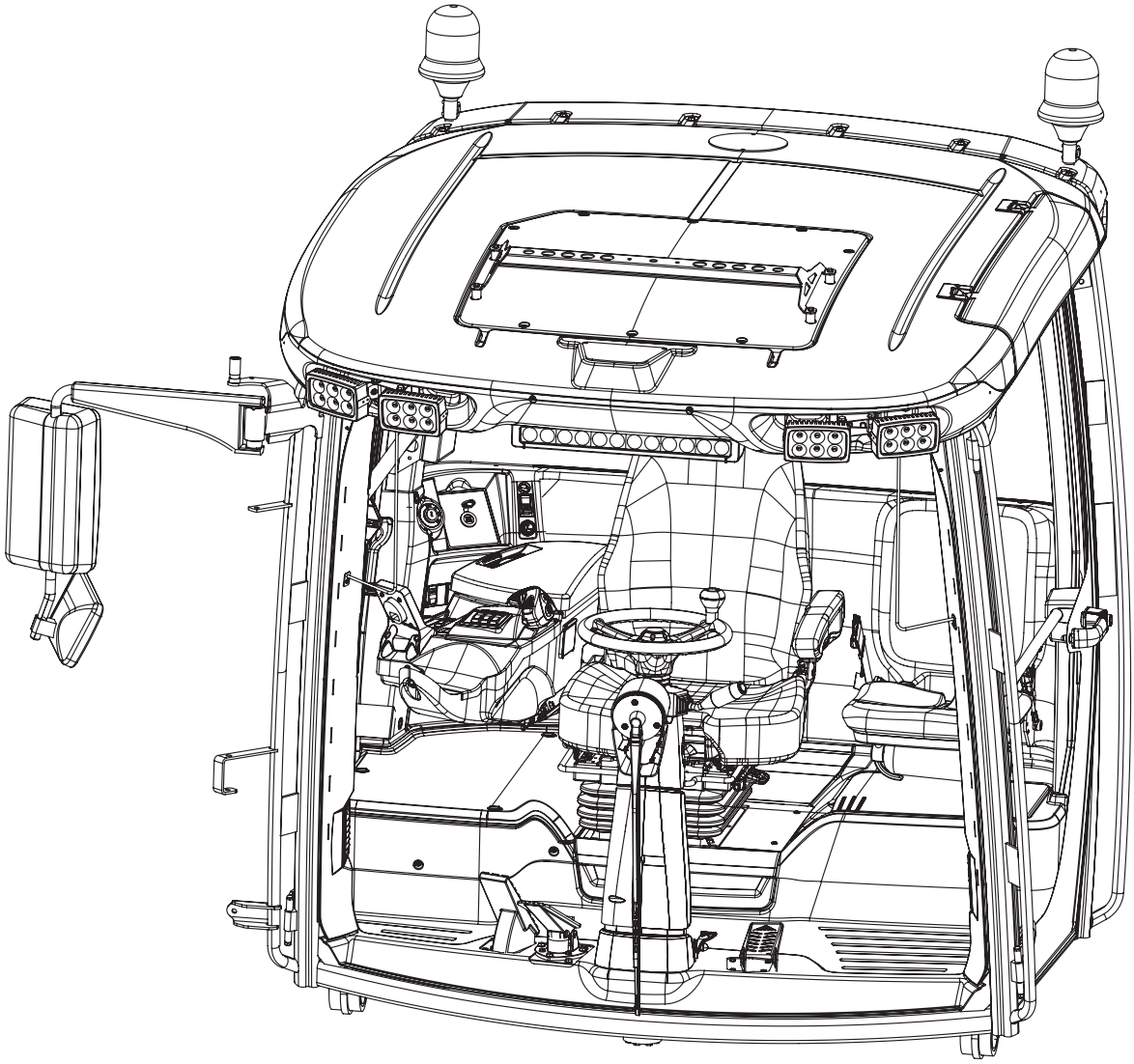

Extension Bracket, Side Mirror

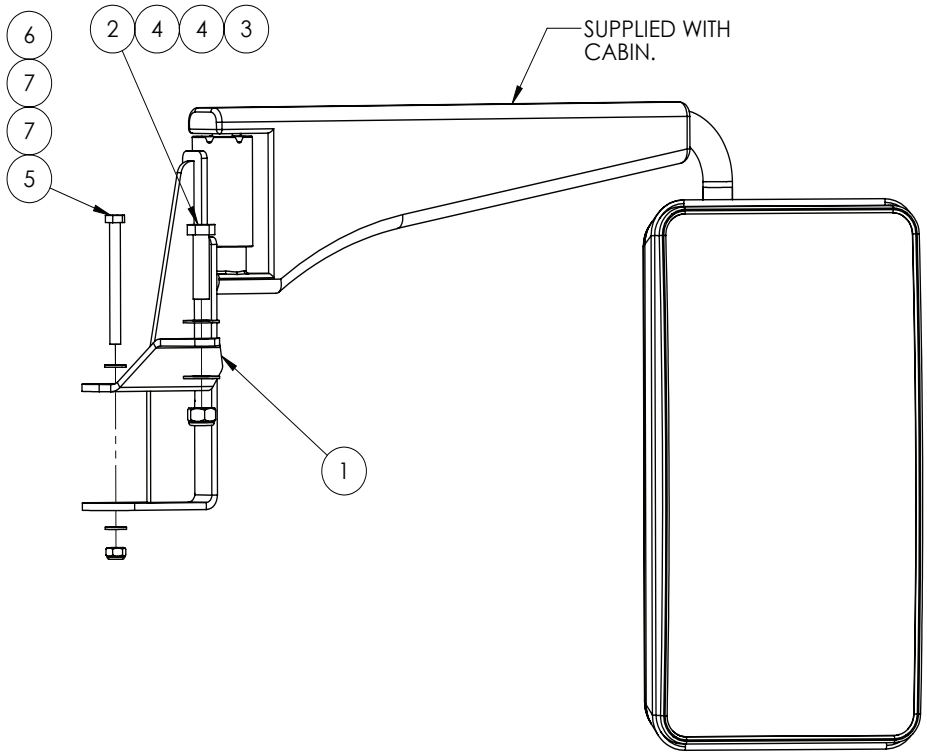

ITEM NO.	PART NUMBER	DESCRIPTION	QTY.
1	GA4602185	BRACKET, MIRROR EXTENSION SPACER, RH, CLAAS CABIN	1
2	GA5000327	SET SCREW M12 X 45 GR8.8 ZP	1
3	GA5012461	NUT M12 NYLOC ZP	1
4	GA5000577	WASHER 12MM FLAT SS HD	2
5	GA0500117	BOLT M8 X 85 GR8.8 ZP	1
6	GA5052590	NUT M8 NYLOC SS	1
7	GA5003643	WASHER 8MM FLAT SS HD	2

Continued over page

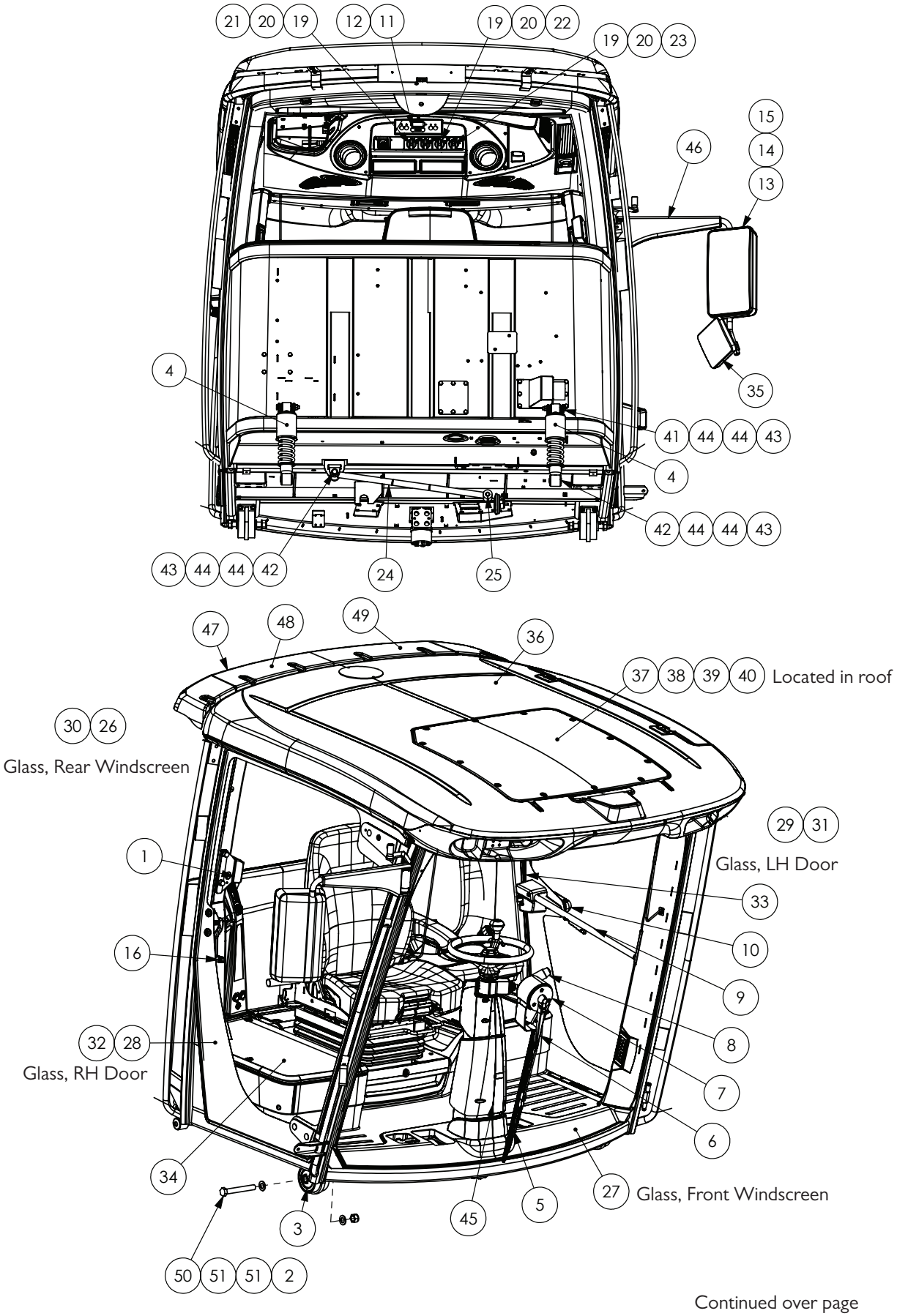

Continued over page

Cabin - Claas

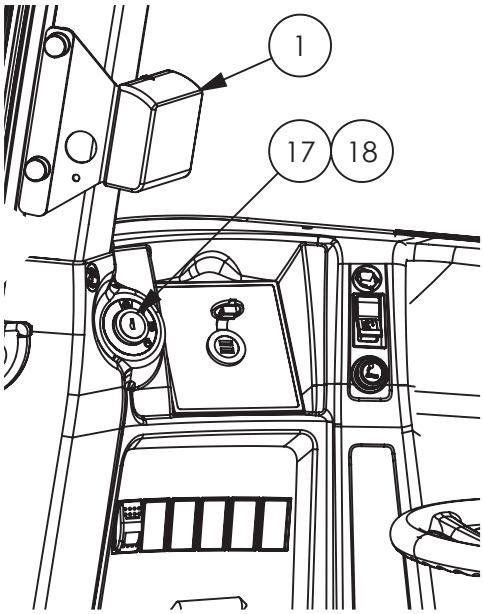

ITEM NO.	PART NUMBER	DESCRIPTION	QTY.
1	GA5054100	CUP HOLDER	1
2	GA5048125	NUT M20 NYLOC COARSE ZP	2
3	GA5054110	BUSHING	1
4	GA5054105	DAMPER, SHOCK ABSORBER	2
5	GA5054155	WIPER BLADE	1
6	GA5054150	WIPER ARM	1
	GA5078978	WIPER ARM & BLADE, SUIT, CLAAS CABIN, SERIAL NUMBER X1012900 ON	
7	GA5078441	MOTOR, WINDSCREEN WIPER, CLAAS CABIN, SERIAL NUMBER X1003708 ON	1
	GA5078977	MOTOR, 12V, WINSCREEN WIPER, CLAAS CABIN, SERIAL NUMBER X1012900 ON	
8	GA5054195	INDICATOR STALK	1
9	GA5026473	DOOR LOCK, CABIN, CLAAS, X10 & X11	1
10	GA5054180	HANDLE EXTERIOR	1
11	GA5054285	CONTROL MODULE, A/C AND HEATER UNIT, AC MATIC, 12V, CLAAS CAB, 0558 817	1
	GA5054286	CONTROL MODULE, A/C AND HEATER UNIT, AC MATIC, 24V, CLAAS CAB, 0559 061	1
12	GA5054280	SENDER TEMPERATURE	3
13	GA5054125	SIDE MIRROR GLASS	1
14	GA5054130	COVER CAP MIRROR	1
15	GA5054120	SIDE MIRROR, COMPLETE ASSEMBLY	1
16	GA5054135	HANDLE INTERNAL RHS	1

Continued over page

Cabin - Claas

ITEM NO.	PART NUMBER	DESCRIPTION	QTY.
17	GA5054635	LOCKING CYLINDER	1
18	GA5054206	MASTER KEY	1
19	GA5054250	ROTARY KNOB, FOR LIGHT	3
20	GA5054270	SWITCH INSERT, FOR LIGHTING KNOB	3
21	GA5054210	SWITCH LIGHT, LHS	1
22	GA5054215	SWITCH LIGHT, MIDDLE	1
23	GA5054095	SWITCH LIGHT, RHS	1
24	GA4659380	PANHARD ROD, 655MM CENTRES	1
25	GA5054535	BEARING BUSH, FOR PANHARD ROD	2
26	GA5065481	GLASS, CLAAS CAB, REAR	1
27	GA5065489	GLASS, FRONT WINDSCREEN, LAMINATED	1
	GA5056550	GLASS, FRONT, WINDSCREEN, SUIT, X10 REV02, SERIES CABIN, CLAAS, 00 3021 136 0, FROM S/N 203906 ON	1
28	GA5065483	GLASS, SUIT CLAAS CAB, DOOR RIGHT	1
29	GA5065484	GLASS, SUIT CLAAS CAB, DOOR LEFT	1
30	GA5054470	SUNSHADE REAR	1
31	GA5065463	SIDE BLIND, LH	1
32	GA5065462	SIDE BLIND, RH	1
33	GA5065461	SEAL, SUIT CLAAS CAB DOOR	2
34	GA5070404	COVER PANEL FUSE BOX	1
35	GA5070330	MIRROR, CONVEX, LOWER, MANUAL ADJUST - NOT USED	1
36	GA5054530	CABIN ROOF	1
37	GA5054275	FAN BLOWER ASSEMBLY,	1
38	GA5054185	EVAPORATOR COIL	1
39	GA5054115	HEATER EXCHANGE / CORE	1
40	GA5054190	EXPANSION VALVE	1
41	GA5011263	BOLT M12 X 90 ZP GR8.8	2
42	GA5000259	BOLT M12 X 100 ZP GR8.8	4
43	GA5012461	NUT M12 NYLOC ZP	6
44	GA5000577	WASHER 12MM FLAT SS HD	24
45	GA5055540	GAS STRUT, STEERING COLUMN LOWER	1
46	GA5075270	MIRROR BRACKET, ADJUSTABLE	1
47	GA5066805	ROOF PANEL, REAR ROOF, PLASTIC	1
	GA5071950	ROOF SUPPORT PANEL, REAR ROOF, STEEL	1
48	GA5054255	ANTENNA AERIAL RADIO AM FM GME WITH BASE AND LEAD	1
49	GA5054265	AERIAL, UHF, AE409L GME (INCLUDES BASE & LEAD)	1
50	GA5001531	BOLT M20 X 150 GR8.8 ZP	2
51	GA5001741	WASHER 20MM FLAT SS HD	4

Cabin - Assembled

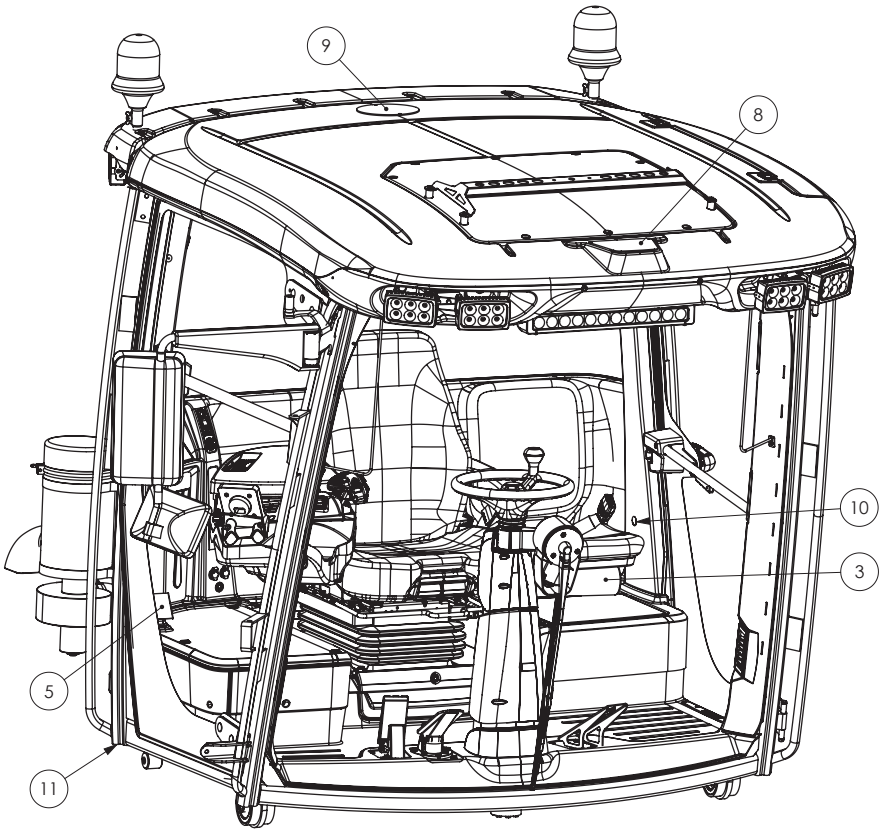

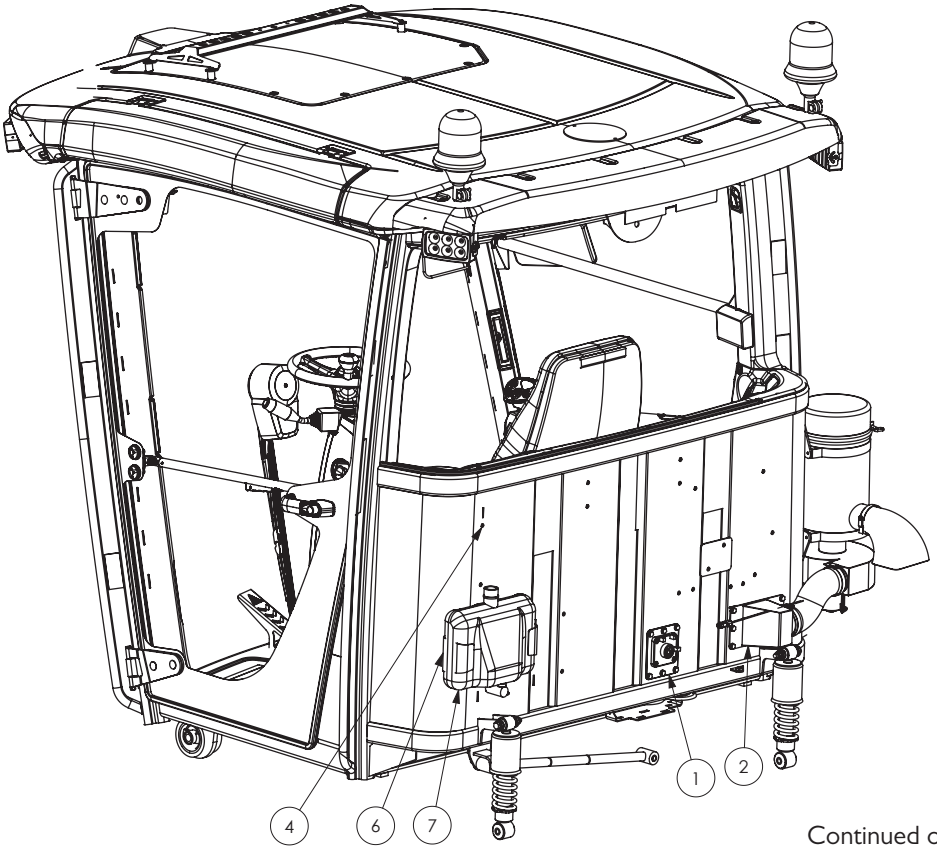

Continued over page

Cabin - Assembled

ITEM NO.	PART NUMBER	DESCRIPTION	QTY.
1	GA4536285	COVER PLATE BACK OF SP CABIN SMALL	1
	*	ISOBUS RAVEN PLUG	1
	*	ISOBUS JOHN DEERE PLUG	1
2	GA4658850	CARBON FILTER AIR INTAKE	1
3	GA5007099	EXTINGUISHER, FIRE B&E FLAMEGUARD 1KG ABE	1
4	GA5017909	XMAS TREE CLIP, BLACK, 16MM HEAD, 27MM LENGTH	17
5	GA4504390	COVER PLATE, ACCESS PORT, RIGHT SIDE DOOR JAM	1
6	GA4505035	MOUNTING BRACKET WASHER BOTTLE	1
7	GA5070785	WINDSCREEN WASHER BOTTLE 5.8L	1
	GA5012199	GROMMET, 29MM OD, NEOPRENE	1
8	GA4503820	PLATE RECEIVER MOUNT REAR CLAAS CABIN	1
9	GA4503815	PLATE RECEIVER MOUNT FRONT CLAAS CABIN	1
10	GA5054170	COVER CAP FOR SCREWS	1
11	GA5069905	FITTING BRASS 5/8" - 5/8" STRAIGHT HOSE BARB (HEATER HOSE JOINER)	2
-	GA4504105	PLATE, ROUND, ALUMINIUM, STEERING WHEEL CENTRE	1
-	GA5011465	BOLT M8 X 16 ZP GR8.8	16
-	GA5003643	WASHER 8MM FLAT SS HD	16

Cabin - Overhead Components

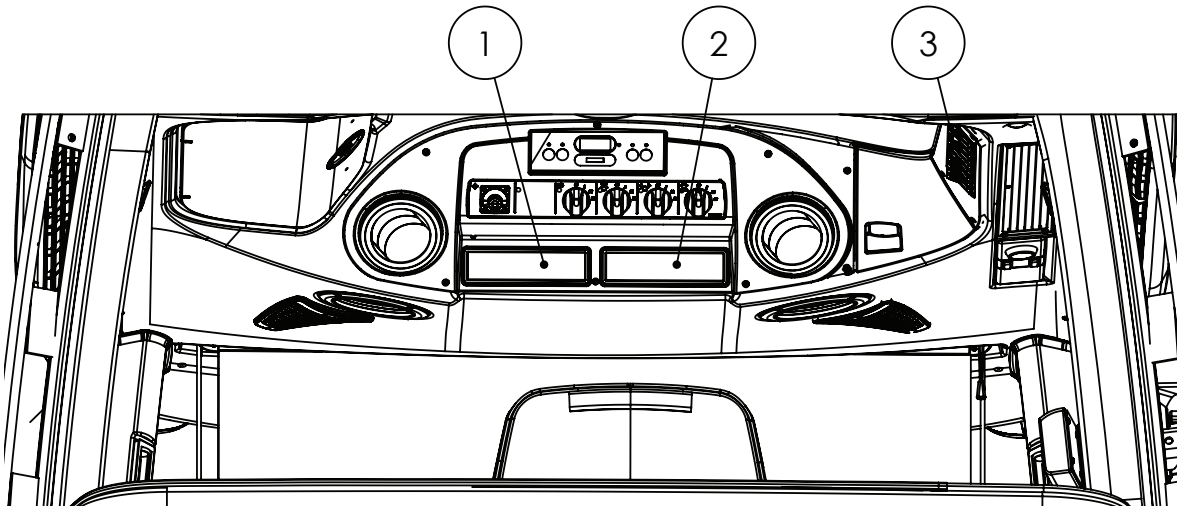

ITEM NO.	PART NUMBER	DESCRIPTION	QTY.
1	GA5017409	AUDIO HEAD UNIT, CD/MP3/WMA AM/FM RADIO, BLUETOOTH, IPOD CONTROL & REMOTE	1
2	GA5017131	UHF 477 MHZ CB RADIO, DIN SIZE	1
3	GA5069290	SWF SWITCH ON/OFF 12V	1
	GA5069277	SWF SWITCH INSERT, BEACON	1

Cabin - Right Corner Panel

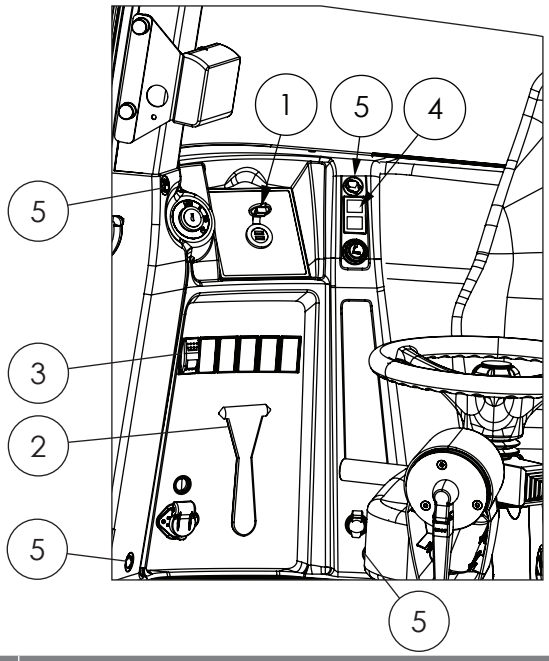

ITEM NO.	PART NUMBER	DESCRIPTION	QTY.
1	GA3000084	AUXILIARY POWER SOCKET, DUAL USB	1
2	GA5053425	EMERGENCY EXIT HAMMER	1
3	GA5069290	SWF SWITCH ON/OFF 12V	1
	GA5069276	SWF SWITCH INSERT, FAN	1
4	GA5069295	SWF DUAL WARNING LAMP 12V	1
	GA5069285	SWF SWITCH INSERT, PNEUMATIC SUSPENSION	1
	GA5069275	SWF SWITCH INSERT, PARK BRAKE	1
5	GA5054170	COVER CAP FOR SCREWS	4

GPS Accessories Bar

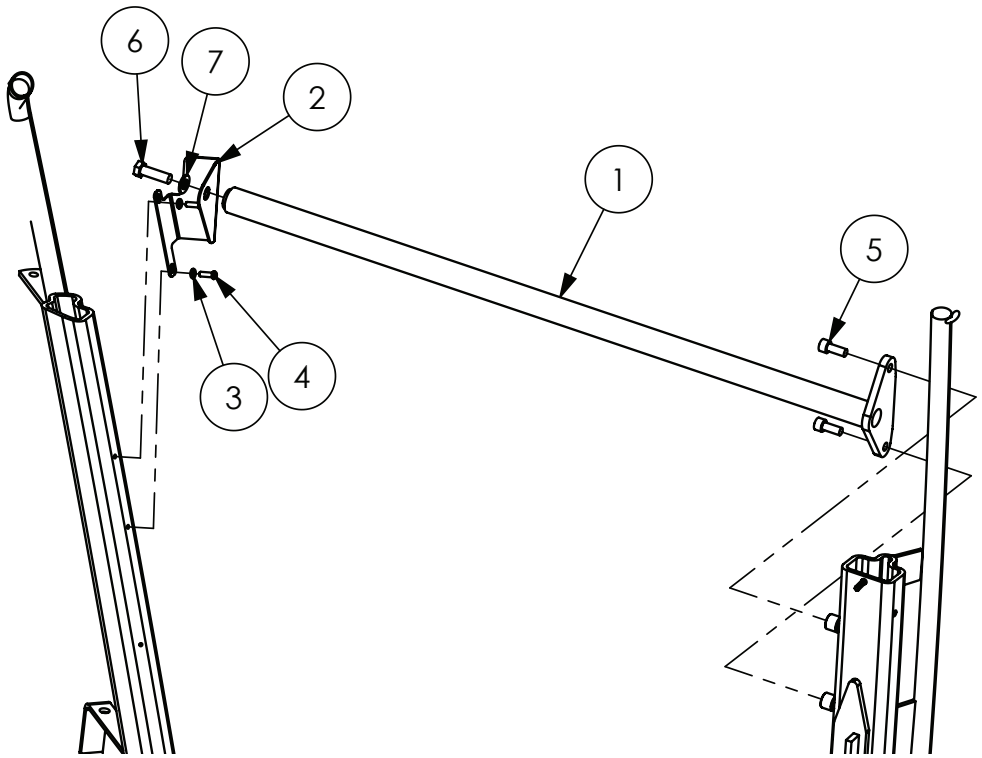

ITEM NO.	PART NUMBER	DESCRIPTION	QTY.
1	GA4660680	ACCESSORY RAIL BAR, STRAIGHT, CABIN	1
2	GA4509450	PLATE, BENT, CONSOLE RAIL MOUNT FRONT, CLAAS CABIN	1
3	GA5004437	WASHER 6MM FLAT SS	2
4	GA5004053	BHCS M6 X 20 SS	2
5	GA5071085	SHCS M10 X 25 ZP GR12.9	2
6	GA5000319	SET SCREW M12 X 40 ZP GR8.8	1
7	GA5000577	WASHER 12MM FLAT SS HD	1

Fuse Box Cover Mount

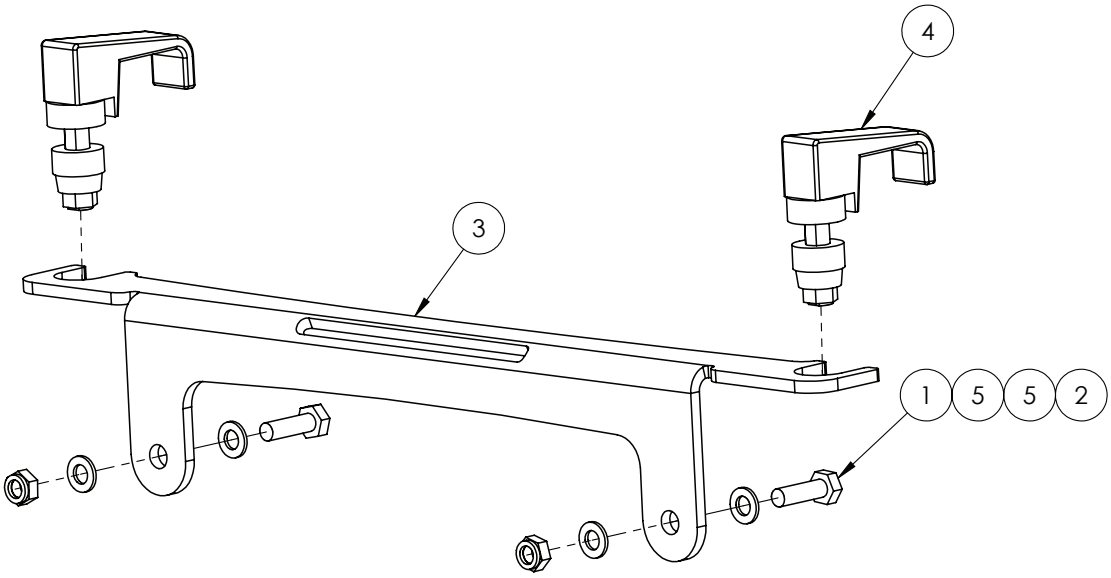

ITEM NO.	PART NUMBER	DESCRIPTION	QTY.
1	GA5004065	BOLT M6 X 20 GR8.8 ZP	2
2	GA5048115	NUT M6 NYLOC ZP	2
3	GA4402220	PLATE, FUSE BOX LID MOUNT SUIT CLAAS CABIN	1
4	GA5066600	RAWL ACTION LATCH, QUICK ACCESS FASTENER, SWELL, BLACK	2
5	GA5054170	COVER CAP FOR SCREWS SUIT CLAAS CAB 2011	4

Seat & Side Console

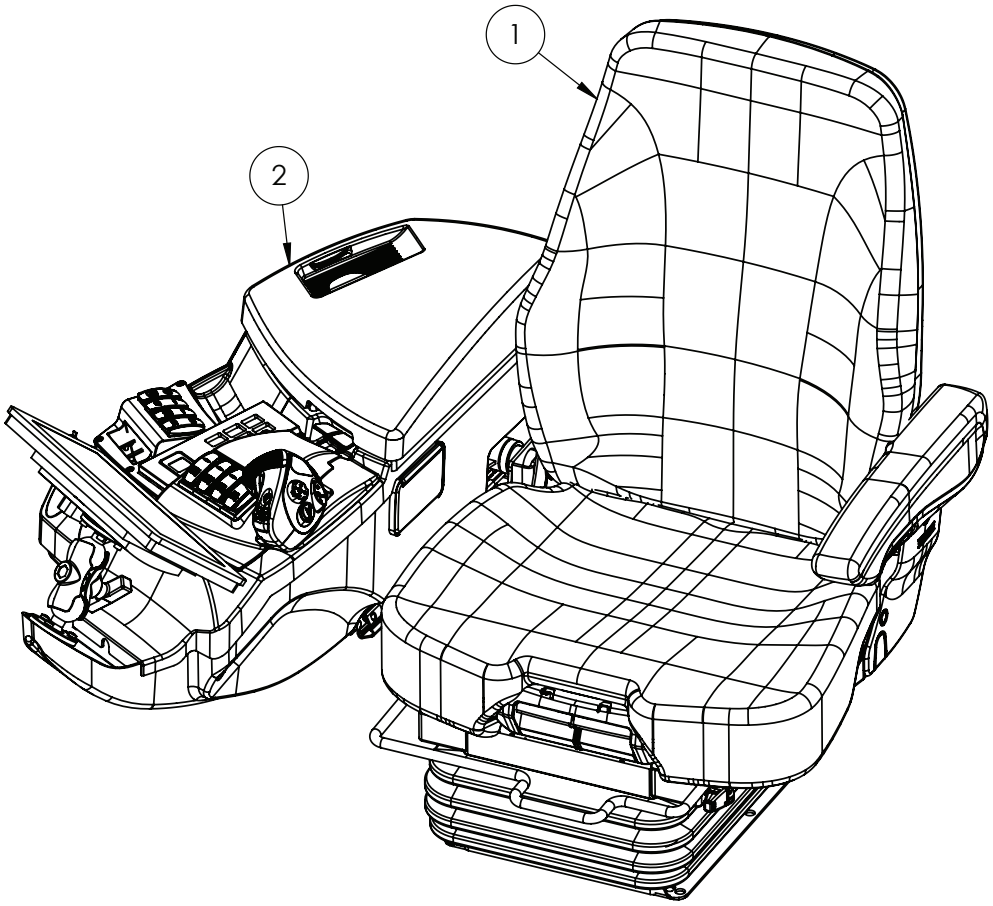

ITEM NO.	PART NUMBER	DESCRIPTION	QTY.
-	GA5071930	SEAT COVER, DRIVER AND TRAINING SEAT, SUIT CLAAS SEAT	-
1	GA5070385*	CLAAS CABIN SEAT ASSEMBLY WITH AIR SUSPENSION	1
2	*	SIDE CONSOLE	1

* Sub-assembly on following pages

Seat - Upper Section

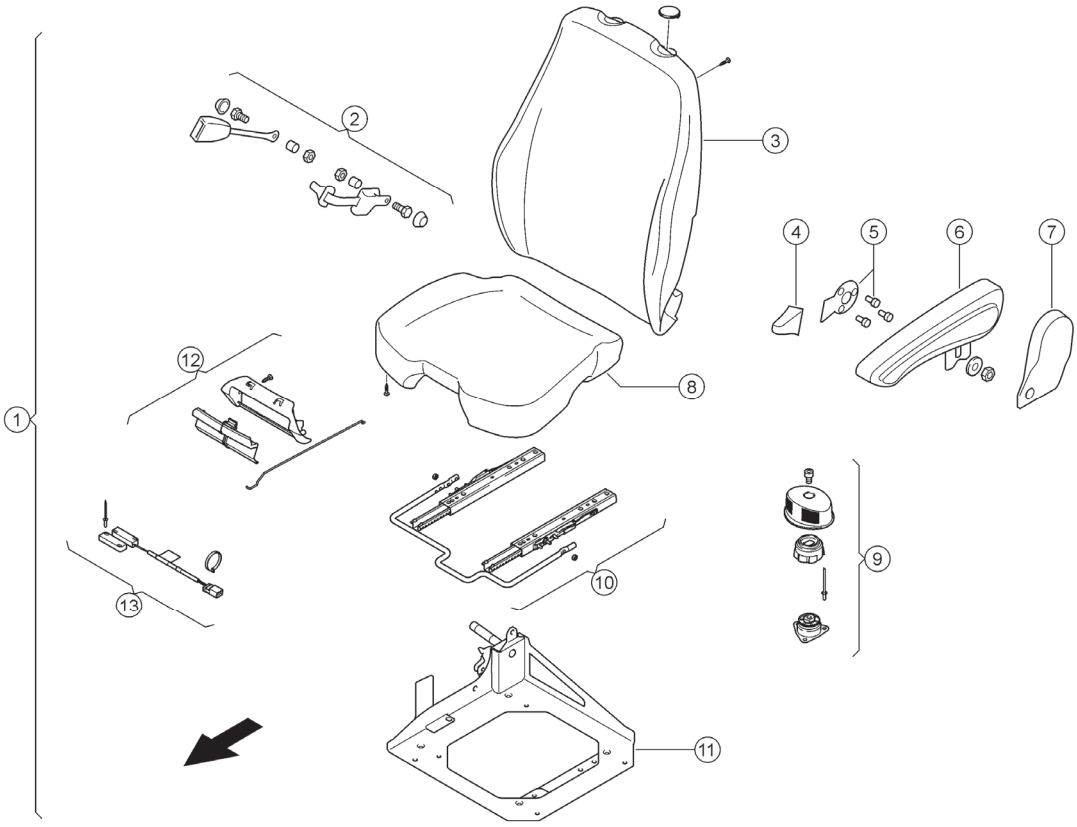

ITEM NO.	PART NUMBER	DESCRIPTION	QTY.
1	-	SEAT ASSEMBLY, NO SUSPENSION	-
2	GA5078556	SEAT BELT BUCKLE	1
3	-	SEAT BACK	1
4	-	SEAT BACK ADJUSTMENT HANDLE	1
5	-	SEAT BACK ADAPTER PLATE	1
6	-	ARM REST	1
7	-	ARM REST COVER	1
8	-	SEAT BASE	1
9	-	LEVER	1
10	-	SEAT RAIL SLIDERS	1
11	-	SEAT BASE ADAPTER	1
12	GA5078557	HANDLE, FRONT ADJUSTMENT	1
13	GA5078558	SEAT SWITCH	1

Seat - Lower Section

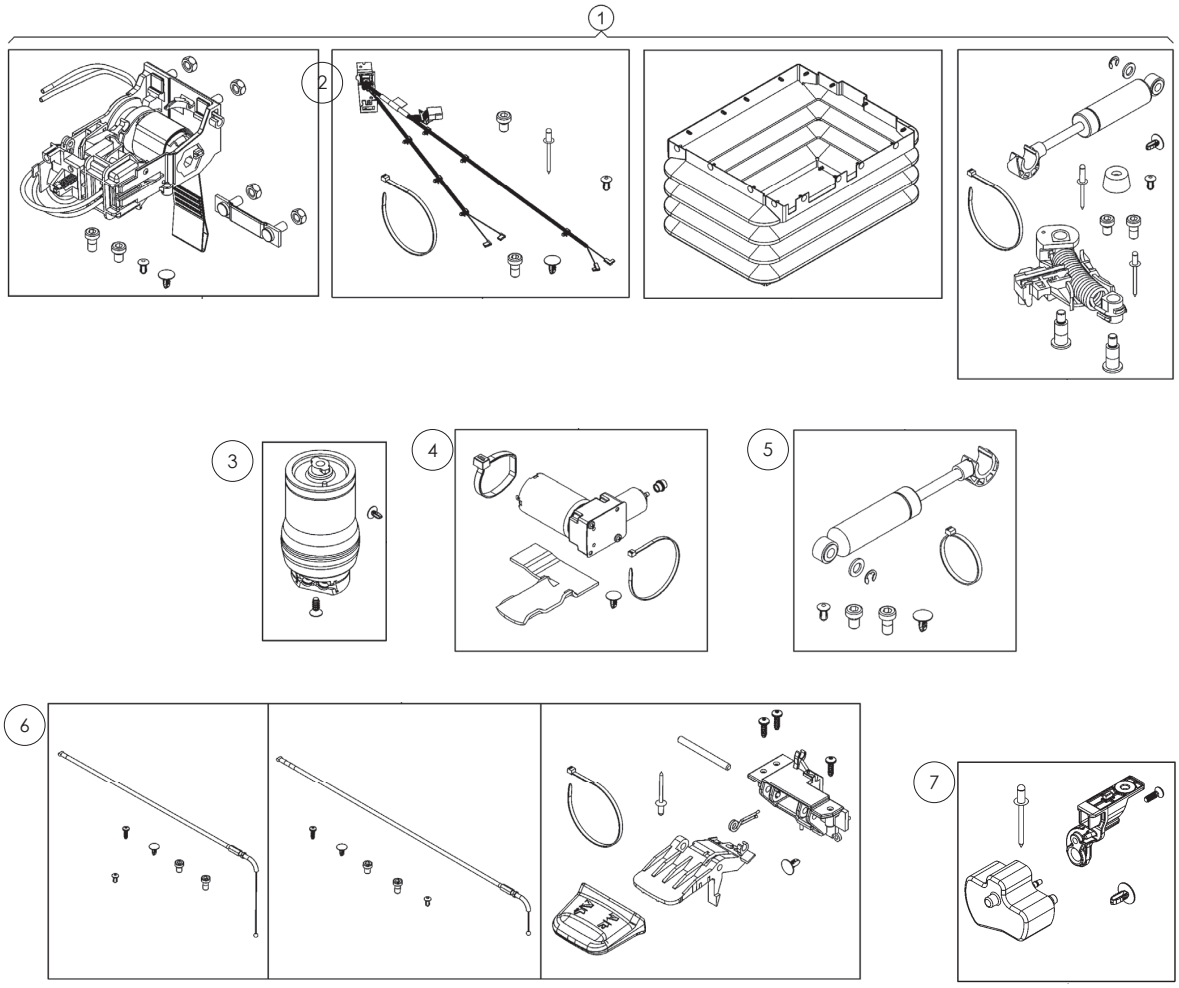

ITEM NO.	PART NUMBER	DESCRIPTION	QTY.
1	GA5078559	SUSPENSION KIT - INCLUDES ITEM 2	1
2	GA5078560	LEVEL CONTROL MECHANISM	1
3	GA5078561	AIR SPRING	1
4	GA5078562	AIR COMPRESSOR	1
5	GA5078563	SHOCK ABSORBER	1
6	GA5078564	SWIVEL HANDLE KIT	1
7	GA5078565	AIR OUTLET PANEL	1

Side Console - G-Hub Display Assembly

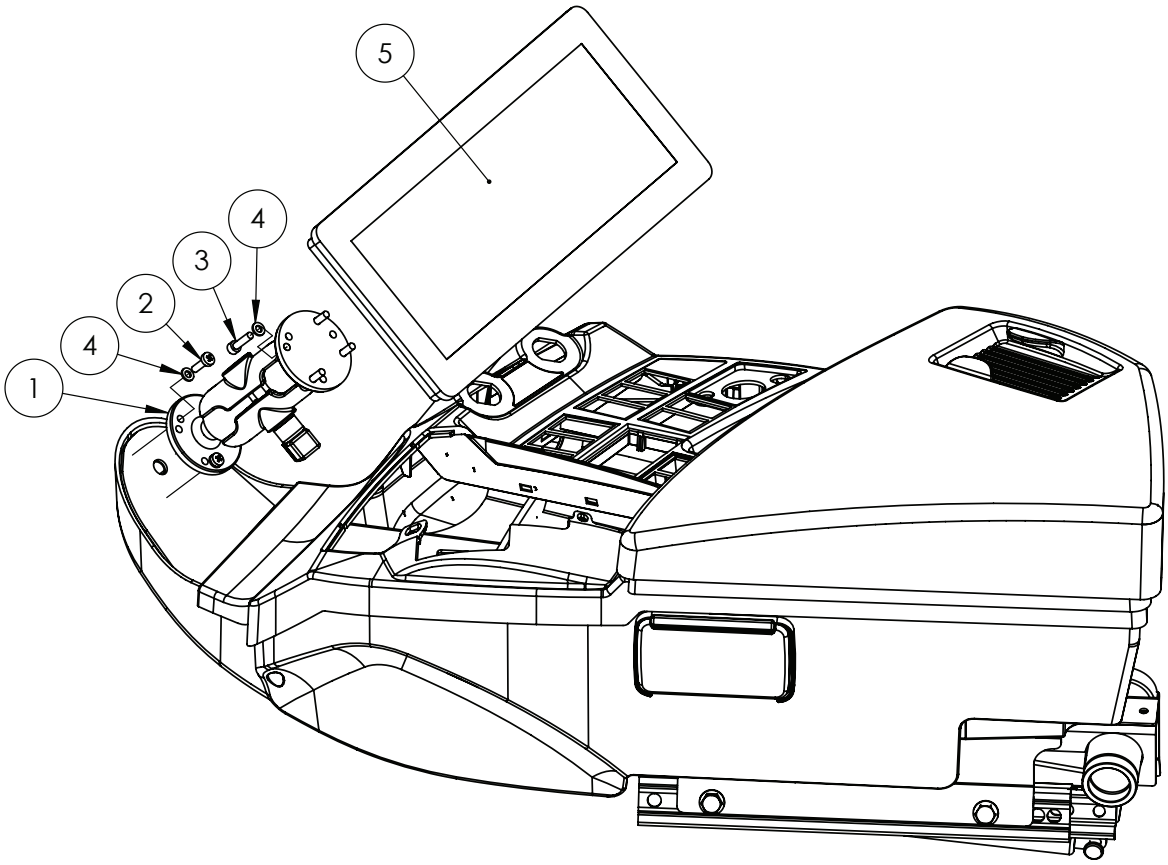

ITEM NO.	PART NUMBER	DESCRIPTION	QTY.
1	GA5020826	RAM MOUNT, UNIVERSAL, ADJUSTABLE, C SIZE 1.5” BALL, 5.24”, WITH ROUND MOUNTS	1
2	GA5003977	BOLT PAN HEAD M5 X 16 SS A2-70	3
3	GA5003581	SHCS M5 X 20 SS A2-70	4
4	GA5003983	WASHER 5MM FLAT SS	7
5	GA3000290	DISPLAY SCREEN, 12”, TOUCH, CR1203, IFM	1

Side Console - Joystick Assembly

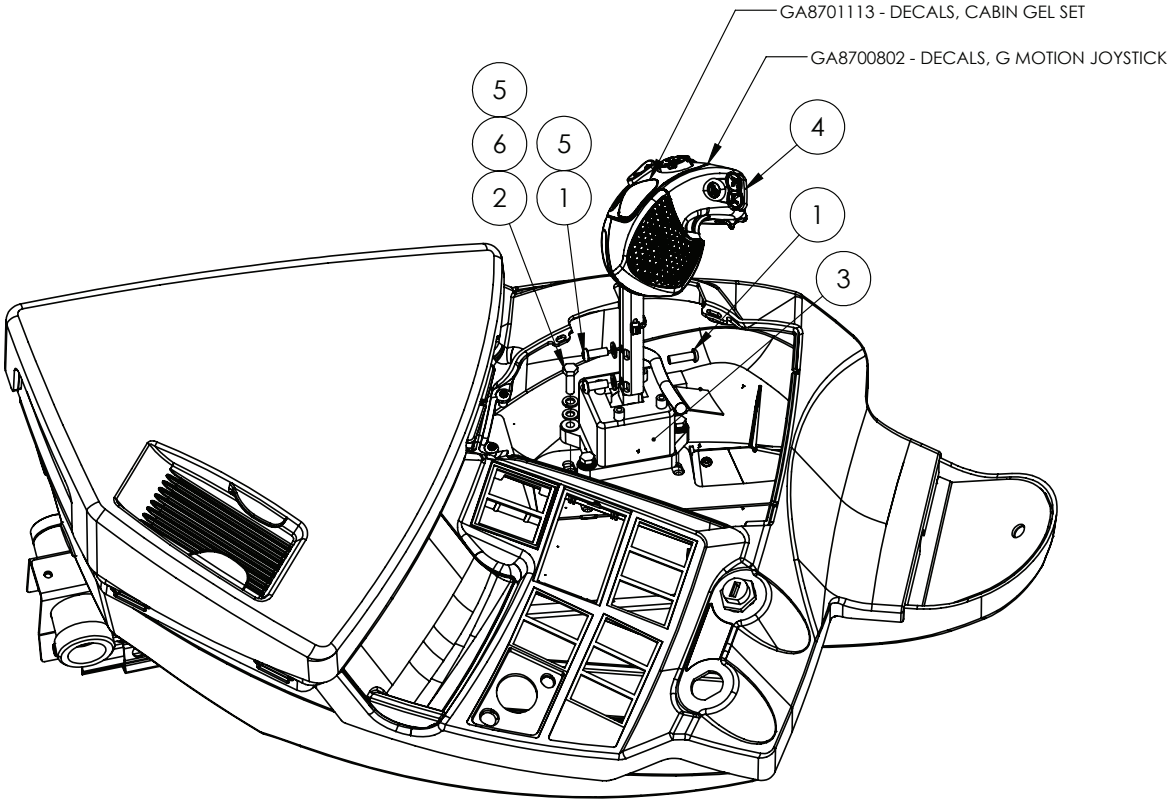

ITEM NO.	PART NUMBER	DESCRIPTION	QTY.
-	GA8701113	DECAL, CABIN GEL SET	1
-	GA8700802	DECAL KIT, G MOTION JOYSTICK	1
1	GA5004053	BHCS M6 X 20 SS A2-70	3
2	GA5004065	BOLT M6 X 20 GR8.8 ZP	3
3	GA3000107	HAND THROTTLE CONTROL CLAAS	1
4	GA3000071	JOYSTICK, MULTI FUNCTION, ERGONOMIC, CLAAS	1
5	GA5004437	WASHER 6mm FLAT SS	5
6	GA5004447	WASHER 6mm SPRING SS	3

Side Console - Common Parts

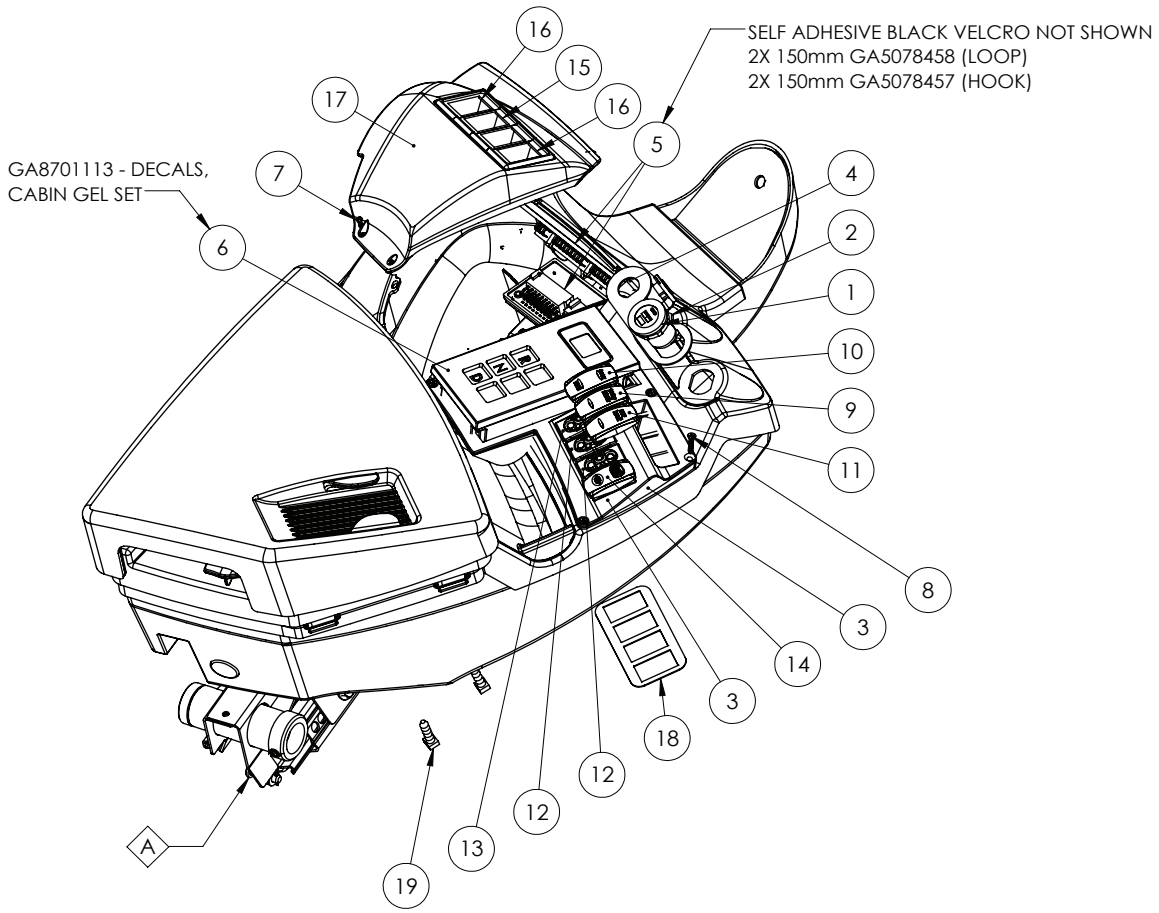

ITEM NO.	PART NUMBER	DESCRIPTION	QTY.
A	GA5025330	GAS STRUT, SIDE CONSOLE, CLAAS, 0565 733.0	1
1	GA3000084	AUXILIARY POWER SOCKET, DUAL USB, NARVA	1
2	GA3000470	AUXILIARY POWER SOCKET, DUAL USB, NARVA	1
3	GA5078543	CONSOLE PANEL, RH SIDE SWITCH AND GEAR SELECTOR, CLAAS	1
4	GA4525020	COVER PLATE, SUIT CLASS SIDE CONSOLE MY20	1
5	GA3000278	I/O MODULE, 16 CHANNEL, CR2012	2
6	GA3000076	PUSH BUTTON GEAR SELECTOR CONTROLLER, PROGRAMMED, ARENS	1
7	GA0500023	SCREW, 4G X 1/2", SELF TAPPING, PHILLIPS HEAD, SS	2
8	GA0500088	SCREW, 8G X 1/2", SELF TAPPING, COUNTERSUNK PHILLIPS, BLACK	5
9	GA3000354	SWITCH ACTUATOR, CRUISE, LASER ETCHED, G6 MY20	1
10	GA3000353	SWITCH ACTUATOR, SRAYROAD, LASER ETCHED, G6 MY20	1

Continue Over Page

Side Console - Common Parts

ITEM NO.	PART NUMBER	DESCRIPTION	QTY.
11	GA3000355	SWITCH ACTUATOR, CENTER DIFF LOCK, LASER ETCHED, G6 MY20	1
12	GA3000343	SWITCH BODY, MOM/OFF, DPDT, 2P2T, BLUE LED	2
13	GA3000344	SWITCH BODY, ON/ON, 2P2T, BLUE LED, NO ACTUATOR, CARLING	1
14	GA3000362	SWITCH CARLING, LOCKING, PARK BRAKE, CONTURA V, G6 MY20	1
15	GA5006387	SWITCH HOUSING CENTRE	2
16	GA5006397	SWITCH HOUSING END	2
17	GA5072140	SWITCH PANEL, SIDE CONSOLE, G5 G6 G8, CLAAS CONSOLE	1
18	GA4525105	SWITCH RETAINING PLATE SUIT MY20 G6 SIDE CONSOLE	1
19	GA5069385	WALL PLUG XMAS TREE 6mm X 30mm BLACK	4

Side Console - Boom Switches - 36-42m

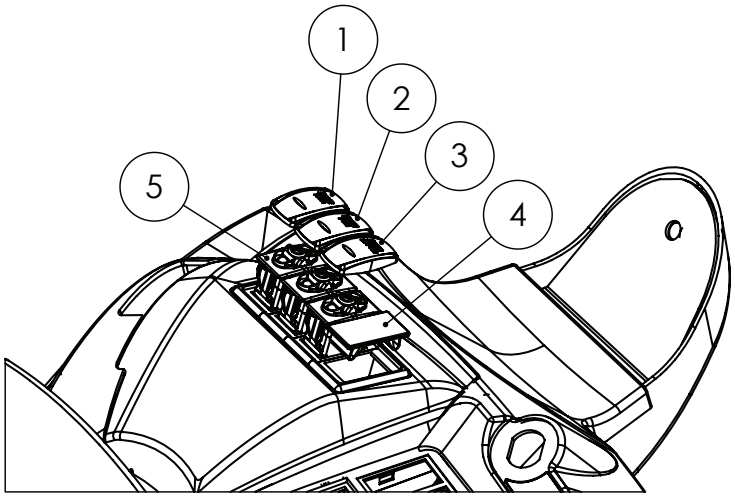

ITEM NO.	PART NUMBER	DESCRIPTION	QTY.
1	GA3000352	SWITCH ACTUATOR, REST, LASER ETCHED	1
2	GA3000349	SWITCH ACTUATOR, FOLD, LASER ETCHED	1
3	GA3000350	SWITCH ACTUATOR, BIFOLD, LASER ETCHED	1
4	GA5006421	CARLING SWITCH BLANK HOLE PANEL PLUG (BLACK)	1
5	GA3000342	SWITCH BODY, MOM/OFF/MOM, 2P2T, BLUE LED, CARLING	3

Side Console - Boom Switches - 48m

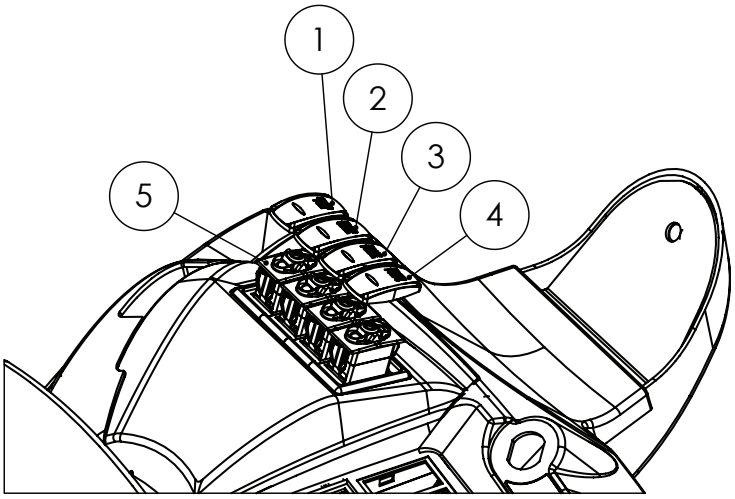

ITEM NO.	PART NUMBER	DESCRIPTION	QTY.
1	GA3000349	SWITCH ACTUATOR, FOLD, LASER ETCHED	1
2	GA3000351	SWITCH ACTUATOR, CATCH, LASER ETCHED	1
3	GA3000368	SWITCH ACTUATOR, FOLD 2, LASER ETCHED	1
4	GA3000365	SWITCH ACTUATOR, FOLD 3, LASER ETCHED	1
5	GA3000342	SWITCH BODY, MOM/OFF/MOM, 2P2T, BLUE LED, CARLING	4

Left Foot Rest

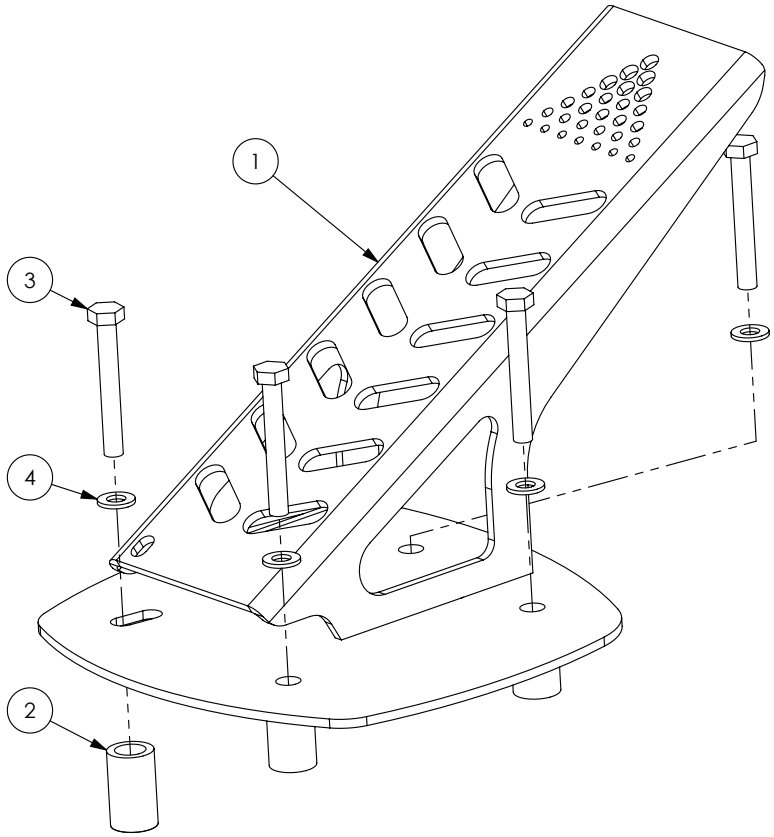

ITEM NO.	PART NUMBER	DESCRIPTION	QTY.
1	GA4658680	CABIN LEFT FOOT REST	1
2	GA4583150	CRUSH TUBE, 15 OD X 10 ID X 25MM LONG	1
3	GA5004081	BOLT M6 X 40 GR8.8 ZP	3
4	GA5004437	WASHER 6MM FLAT SS	3

Pedal Assembly

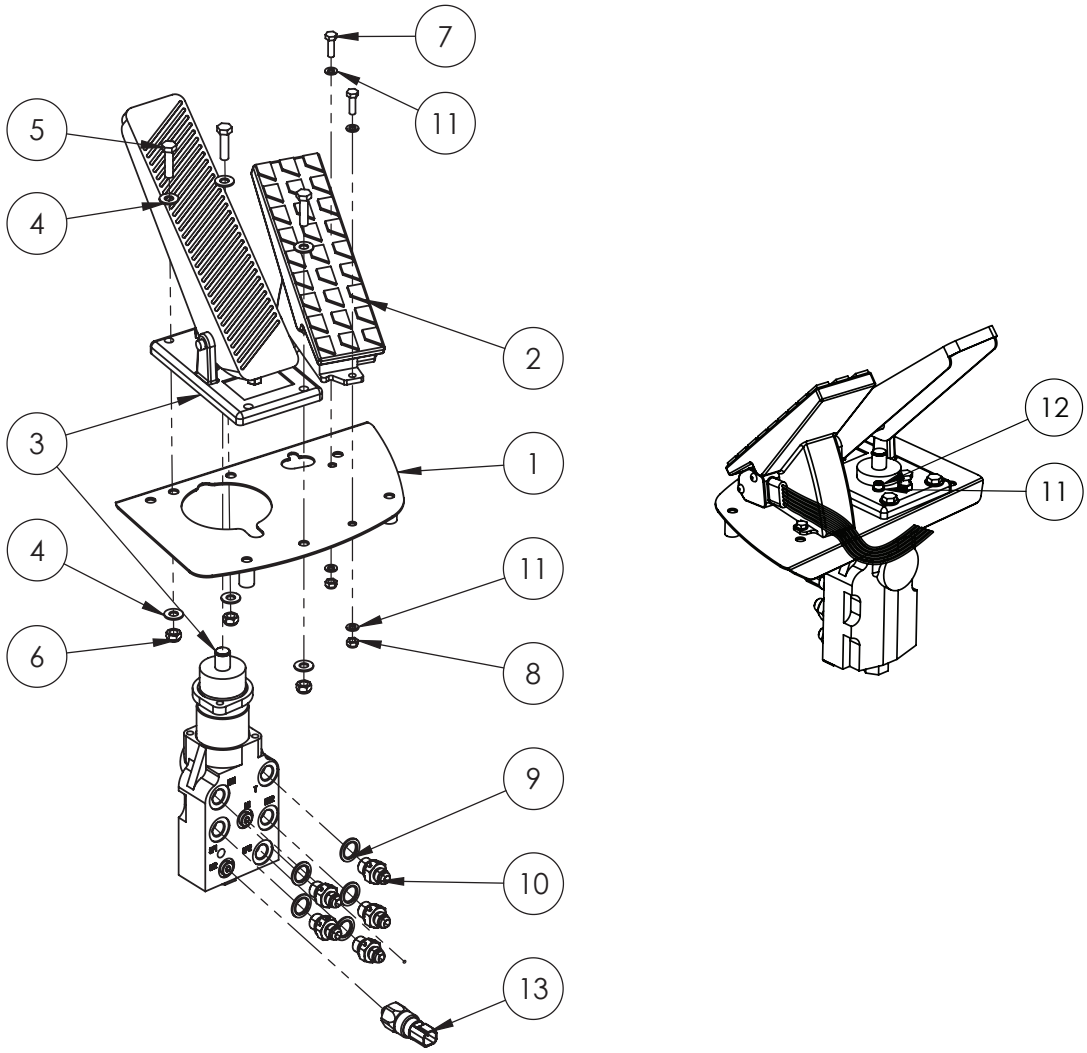

ITEM NO.	PART NUMBER	DESCRIPTION	QTY.
1	GA4600270	ACCELERATOR AND BRAKE PEDAL MOUNT	1
2	GA5065460	THROTTLE PEDAL - ELECTRONIC	1
3	GA3500826	HYDRAULIC VALVE, DUAL, BRAKE, FOOT PEDAL, 150BAR	1
4	GA5003643	WASHER 8MM FLAT SS HD	6
5	GA5011475	BOLT M8 X 30 GR8.8 ZP	3
6	GA5052590	NUT M8 NYLOC SS	3
7	GA5004063	BOLT M6 X 20 SS A-70	2
8	GA5048115	NUT M6 NYLOC ZP	2
9	GA3500129	HYDRAULIC ADAPTOR, SEAL, METAL BONDED, M16	5
10	GA3500714	HYDRAULIC ADAPTER, NIPPLE, 9/16” JIC MALE X M16X1.5 MALE, M7-1609	5
11	GA5004437	WASHER 6MM FLAT SS	6
12	GA5004061	SHCS M6 X 25 SS A2-70	2
13	GA3000066	PRESSURE SWITCH, HYDRAULIC, NO, 1/8", 1-10 BAR	2

Cabin - Carbon Filter - Pre S/N 105840

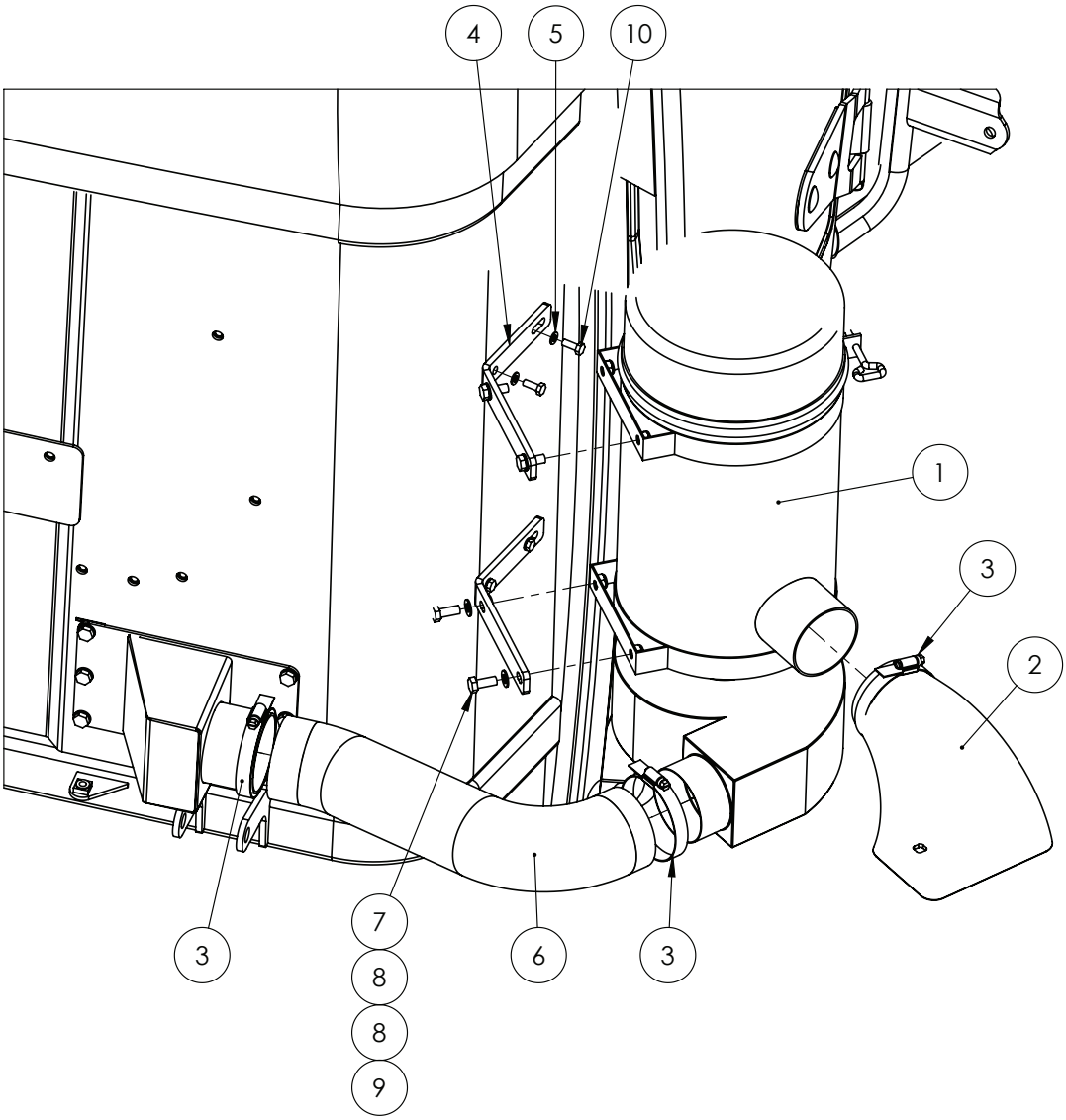

CARBON FILTER SERVICE PART

PART NUMBER	DESCRIPTION
GA5066740	CARBON FILTER, REPLACEMENT INSERT SUIT DONALDSON

ITEM NO.	PART NUMBER	DESCRIPTION	QTY.
1	GA5066741	CARBON FILTER, EXTERNAL MOUNT, 12V, ULTRAGUARD	1
2	GA5002179	AIR RAM 3" INLET	1
3	GA5004241	HOSE CLAMP, 60-80MM, S/S 31/2	3
4	GA4406015	BRACKET, CARBON FILTER MOUNT	2
5	GA5004437	WASHER 6MM FLAT SS	4
6	GA5016849	DUCT 3" TPRDS - CUT TO 400 MM	1
7	GA5004085	BOLT M8 X 20 GR8.8 ZP	4
8	GA5003643	WASHER 8MM FLAT SS HD	8
9	GA5004917	NUT M8 NYLOC ZP	4
10	GA5011395	BOLT M6 X 16 SS A2-70	4

Carbon Filter - Ultraguard MY11 - MY23 Up to S/N 105839

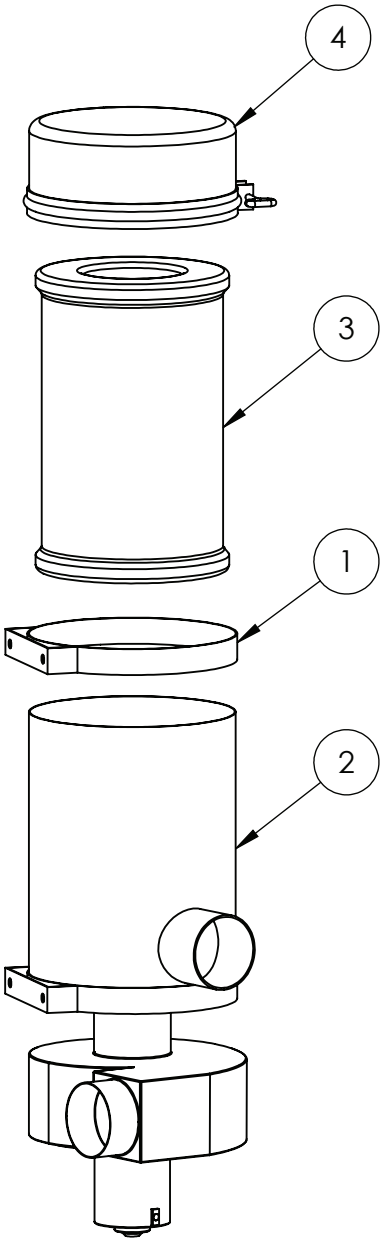

ITEM NO.	PART NUMBER	DESCRIPTION	QTY.
-	GA5025795	WINGNUT, SUIT, ULTRAGUARD CARBON FILTER, GA5066741 & GA5025740	1
1	GA5025785	BELT, BRACKET, SUIT, ULTRAGUARD CARBON FILTER,GA5066741 & GA5025740	2
2	GA5025930	BODY, FILTER BARREL, SUIT, 12V ULTRAGUARD, SUIT, GA5066741	1
3	GA5066740	CARBON FILTER INSERT SUIT DONALDSON	1
4	GA5025934	LID, SUIT, CARBON FILTER, ULTRAGUARD, GA5066741	1

Carbon Filter - Ultraguard MY24 - From S/N 105840

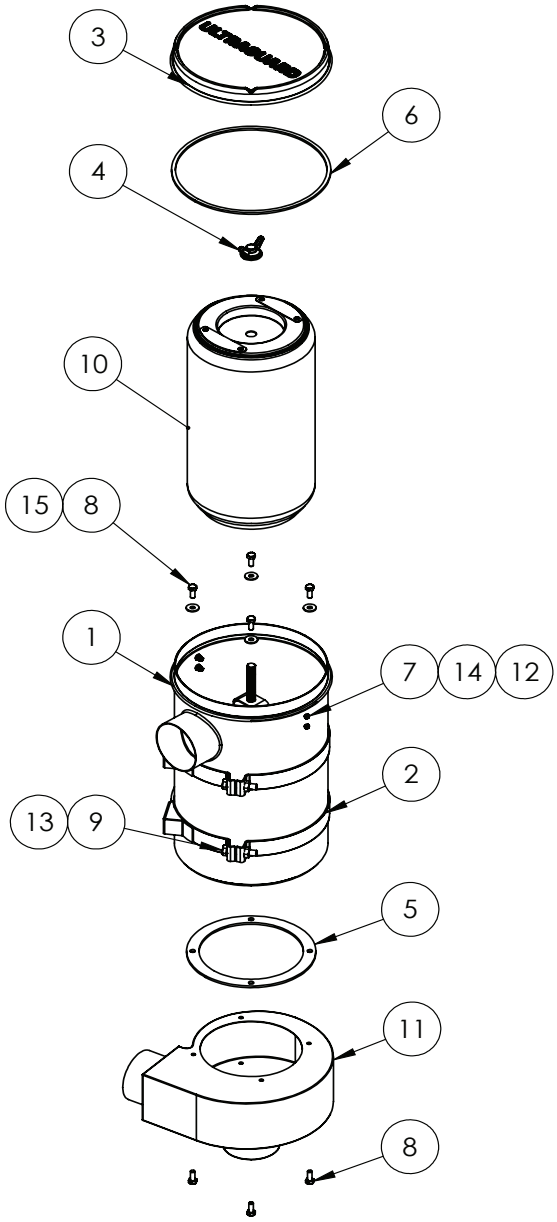

ITEM NO.	PART NUMBER	DESCRIPTION	QTY.
1	GA5025780	BODY, FILTER BARREL, SUIT, ULTRAGUARD CARBON FILTER, GA5025740	1
2	GA5025785	BELT, BRACKET, SUIT, ULTRAGUARD CARBON FILTER, GA5066741 & GA5025740	2
3	GA5025790	LID, SUIT, ULTRAGUARD CARBON FILTER, GA5025740	1
4	GA5025795	WINGNUT, SUIT, ULTRAGUARD CARBON FILTER, GA5066741 & GA5025740	1
5	GA5025800	GASKET, FAN BLOWER, SUIT, ULTRAGUARD CARBON FILTER, GA5075740	1

Carbon Filter - Ultraguard MY24 - S/N 105840

ITEM NO.	PART NUMBER	DESCRIPTION	QTY.
6	GA5025805	GASKET, LID, SUIT, ULTRAGUARD CARBON FILTER, GA5075740	
7	GA5051040	BOLT M4 X 16 SS A2-70	4
8	GA5004041	BOLT M6 X 16 GR8.8 ZP	8
9	GA5048655	BOLT M8 X 40 GR8.8 ZP	2
10	GA5066740	CARBON FILTER, REPLACEMENT INSERT SUIT DONALDSON	1
11	GA5026289	FAN, BLOWER, 12V, ULTRAGUARD, SUIT, GA5025740, MY24 ON	1
12	GA5049025	NUT M4 NYLOC SS	4
13	GA5011499	NUT M8 HEX ZP	2
14	GA5020510	WASHER M4 FLAT SS	4
15	GA5004437	WASHER M6 FLAT SS	4

ISOBUS Connector Plate

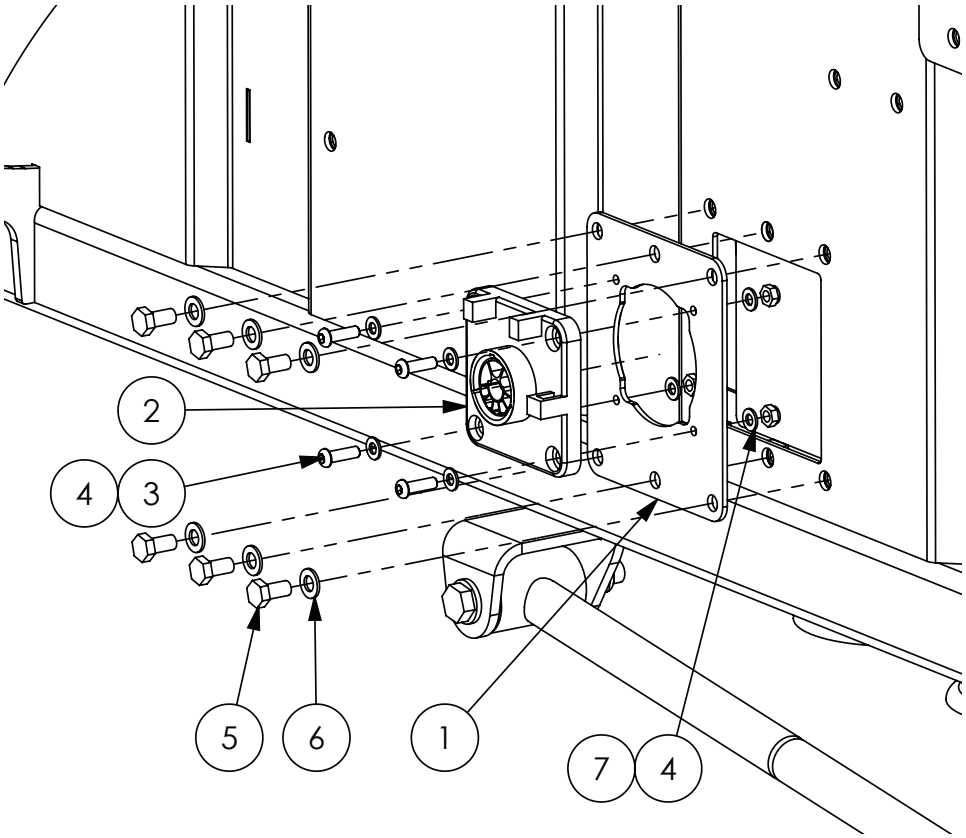

ITEM NO.	PART NUMBER	DESCRIPTION	QTY.
1	GA4509350	PLATE, ISO CONNECTOR MOUNT, CABIN REAR, CROP CRUISER	1
2	-	ISOBUS RAVEN PLUG MOUNT - SUPPLIED ON HARNESS	1
3	GA5004053	BHCS M6 X 20 SS	4
4	GA5004437	WASHER 6MM FLAT SS	8
5	GA5011465	BOLT M8 X 16 GR8.8 ZP	6
6	GA5003651	WASHER 8MM FLAT SS	6
7	GA5004429	NUT M6 NYLOC SS	4

John Deere Roof Mount

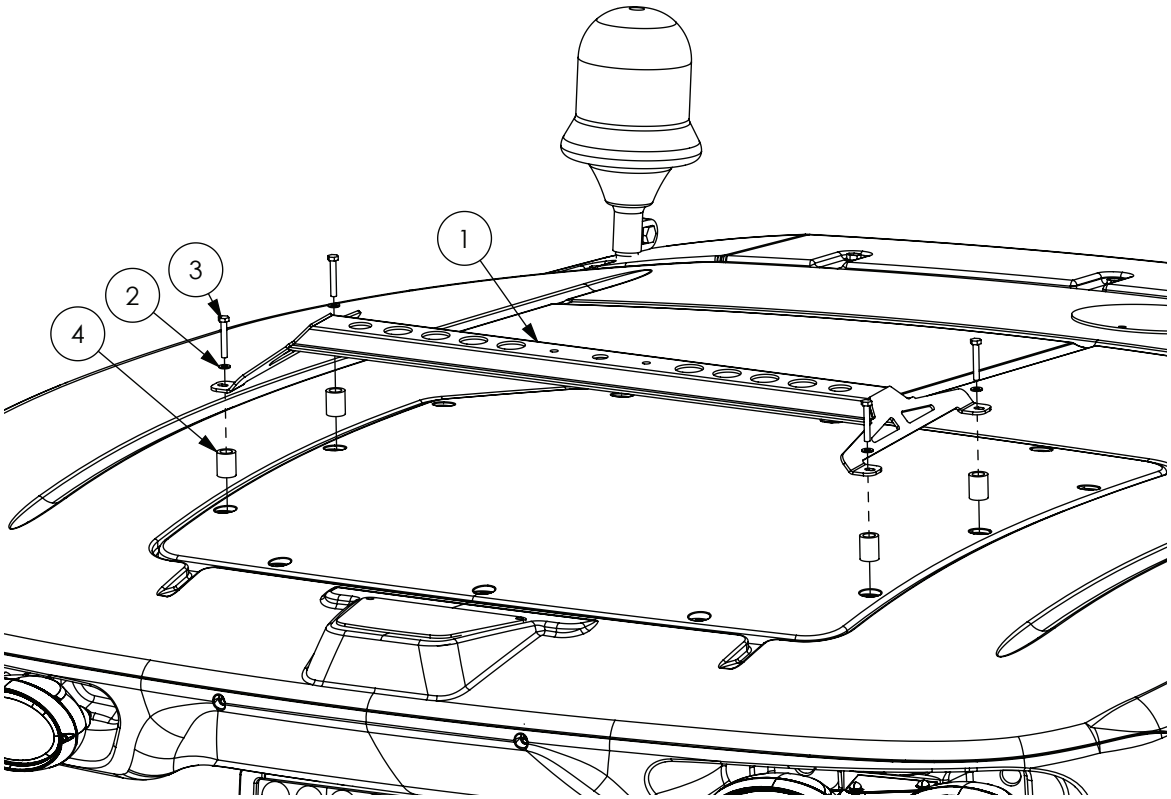

ITEM NO.	PART NUMBER	DESCRIPTION	QTY.
1	GA4660140	RECEIVER MOUNT UNIVERSAL JOHN DEERE	1
2	GA5004437	WASHER 6MM FLAT SS	4
3	GA5004081	BOLT M6 X 40 ZP GR8.8	4
4	GA4552075	CRUSH TUBE, 10.2 ID X 15 OD X 15 MM LONG	4

BRAKES

Brakes - Front 2WD

LEFT SIDE SHOWN

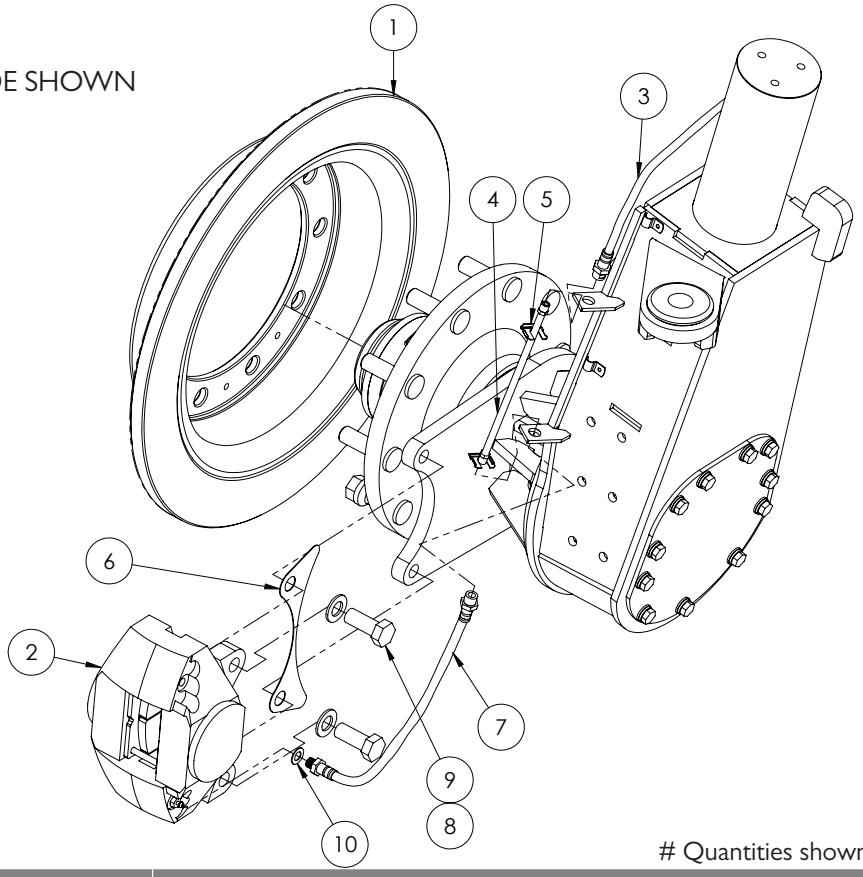

Quantities shown are per side.

ITEM NO.	PART NUMBER	DESCRIPTION	QTY.
-	GA2700123	SEAL KIT, HYDRAULIC MINERAL OIL ONLY, SUIT STILFRENI BRAKE CALIPER (1 SET)	-
1	GA5070065	BRAKE DISC ROTOR, CAST, 335MM PCD, 600MM OD, 282MM CENTRE BORE, CROP CRUISER MY11 ON, SUPER CRUISER, MY08 - MY10	1
2	GA2700095	BRAKE CALIPER, 2 X 75MM, HYDRAULIC, MINERAL OIL, STILFRENI, GREEN MARK	1
3	GA5048210	BRAKE HOSE, FRONT AXLE TO DROPLEG, 470MM LONG	1
4	GA4912496	BRAKE LINE, DROP LEG, FRONT, 2WD, CROP CRUISER	1
5	GA5010359	CLIP FOR BRAKE HOSE	2
6	JCB-CALIPER-SHIM	JCBCALIPER SHIM 1MM FMS 5/9/03	1
7	GA5078570	BRAKE HOSE, LOWER, STEEL LINE TO CALIPER, 500MM LONG, HYDRAULIC OIL, G6 MY20	1
8	GA5001741	WASHER 20MM FLAT SS HD	3
9	GA5001515	SET SCREW M20 X 1.5P X 50 GR8.8 ZP	2
10	GA5007475	WASHER 12 X 22MM COPPER	1

* Sub-assembly on following pages

Brakes - Front 4WD

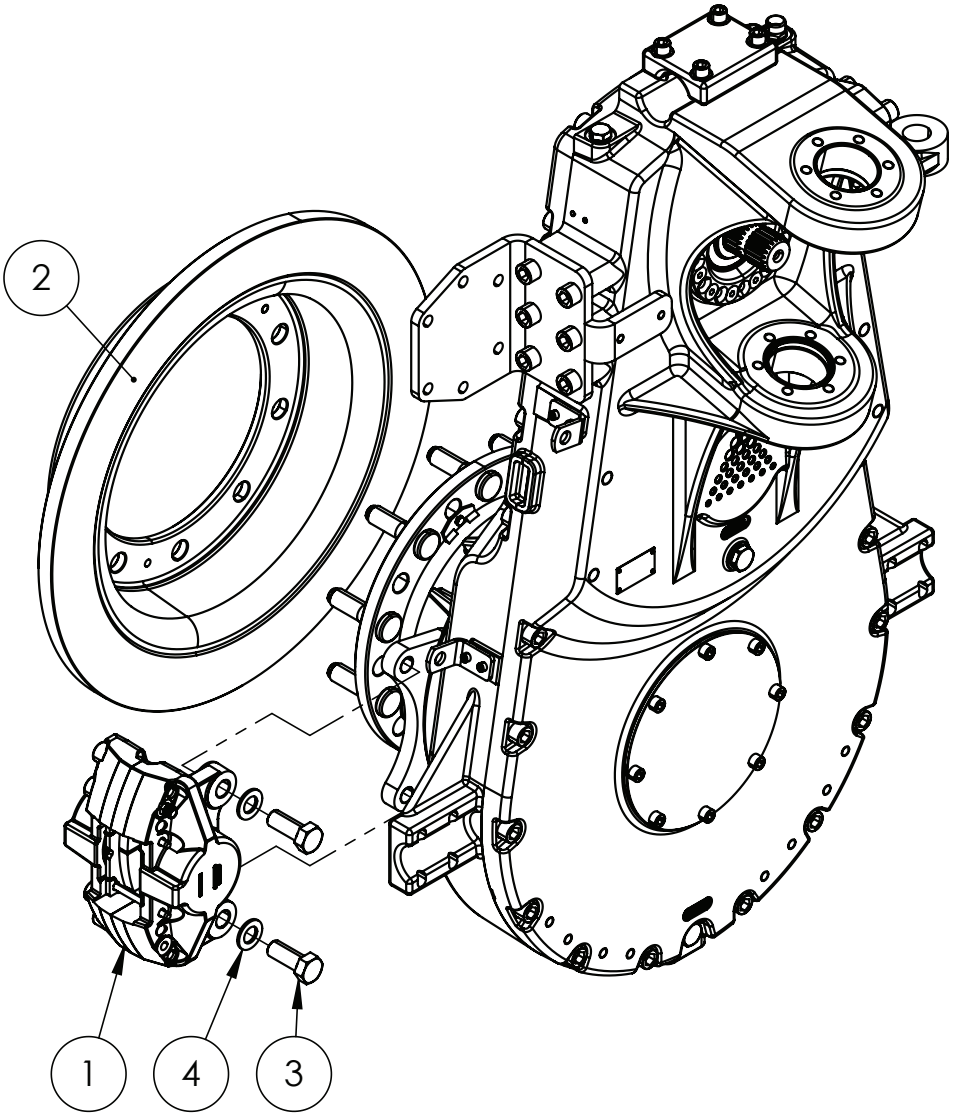

LEFT SIDE SHOWN

Quantities shown are per side.

ITEM NO.	PART NUMBER	DESCRIPTION	QTY.
-	GA2700123	SEAL KIT, HYDRAULIC MINERAL OIL ONLY, SUIT STILFRENI BRAKE CALIPER (1 SET)	-
-	JCB-CALIPER-SHIM	JCB CALIPER SHIM 1MM	-
1	GA2700095	BRAKE CALIPER, 2 X 75MM, HYDRAULIC, MINERAL OIL, STILFRENI, GREEN MARK	1
2	GA5070065	BRAKE DISC ROTOR, CAST	1
3	GA5001515	SET SCREW M20 X 1.5P X 50 GR8.8 ZP	2
4	GA5001741	WASHER 20MM FLAT SS HD	2

* Sub-assembly on following pages

Brakes - Rear 2WD & 4WD

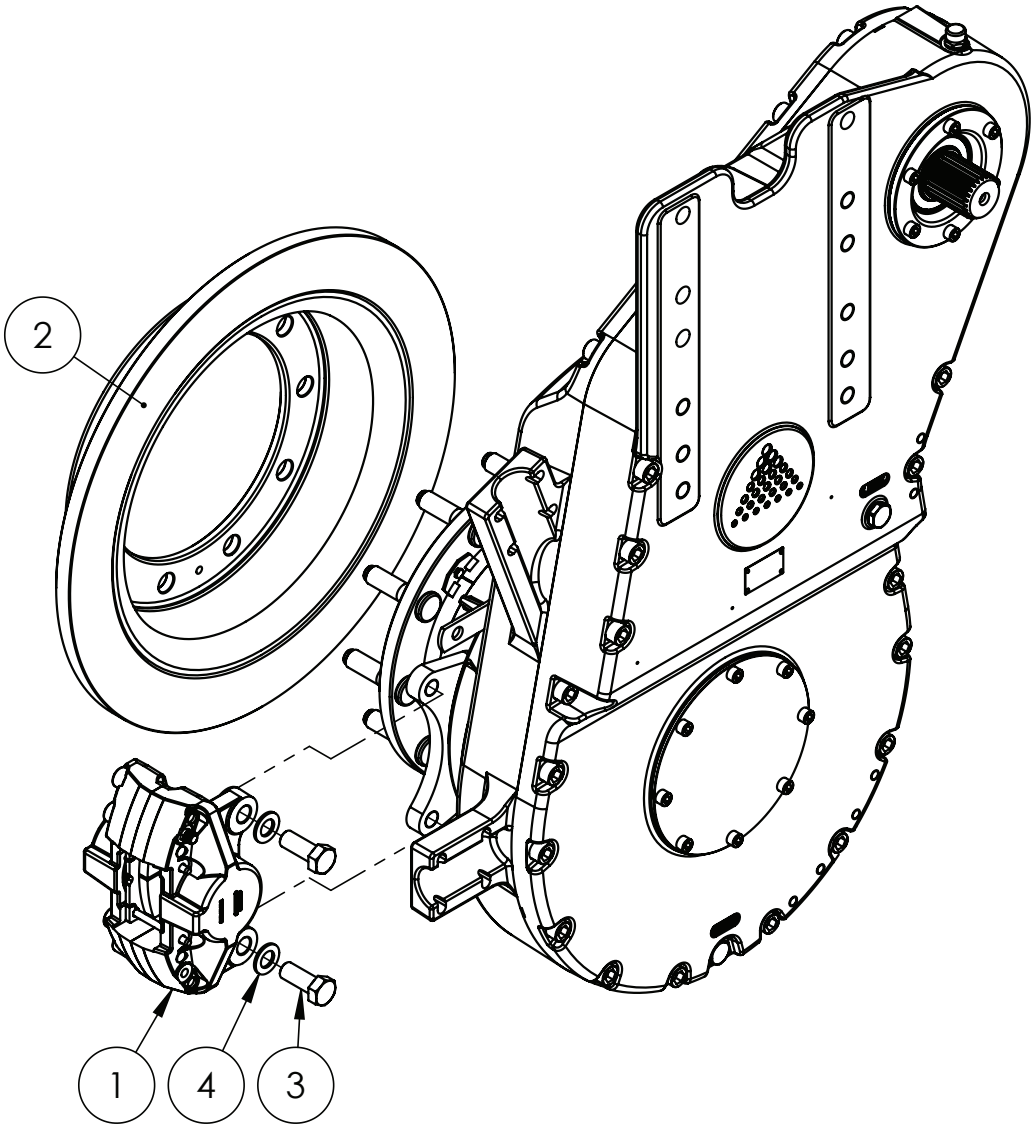

LEFT SIDE SHOWN

Quantities shown are per side.

ITEM NO.	PART NUMBER	DESCRIPTION	QTY.
-	GA2700123	SEAL KIT, HYDRAULIC MINERAL OIL ONLY, SUIT STILFRENI BRAKE CALIPER (1 SET)	-
-	JCB-CALIPER-SHIM	JCB CALIPER SHIM 1MM	-
1	GA2700095	BRAKE CALIPER, 2 X 75MM, HYDRAULIC, MINERAL OIL, STILFRENI, GREEN MARK	1
2	GA5070065	BRAKE DISC ROTOR, CAST	1
3	GA5001515	SET SCREW M20 X 1.5P X 50 GR8.8 ZP	2
4	GA5001741	WASHER 20MM FLAT SS HD	2

* Sub-assembly on following pages

Brakes - Covers - Front 2WD

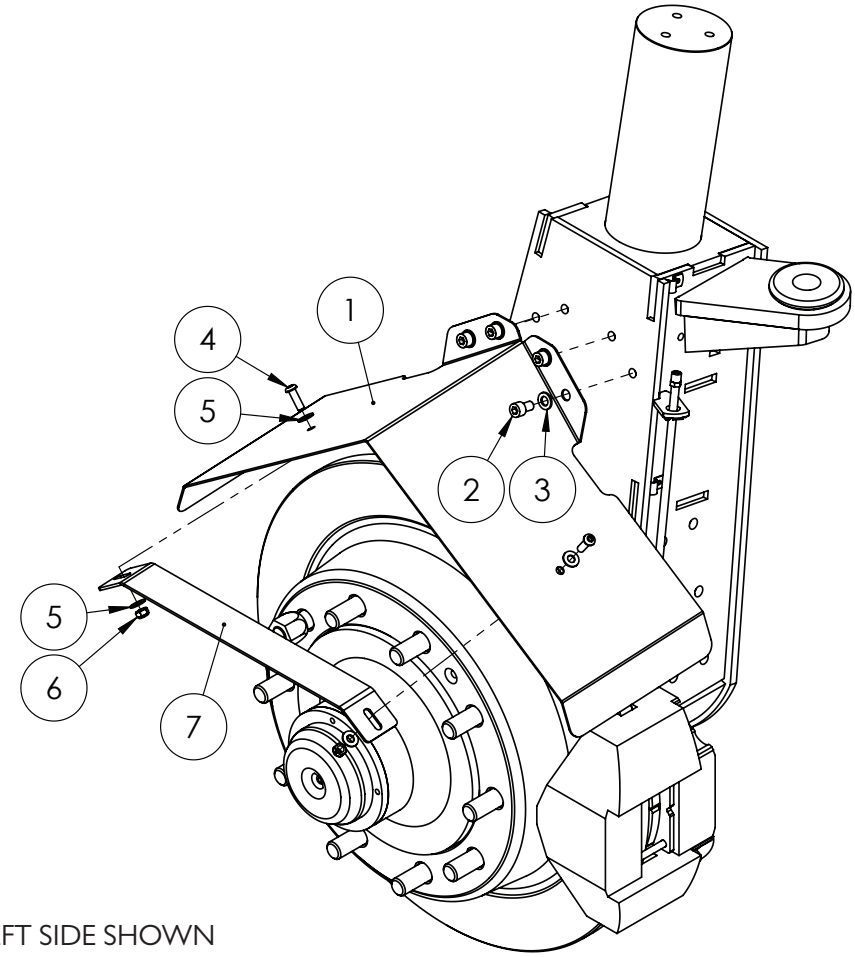

LEFT SIDE SHOWN

Quantities shown are per side.

ITEM NO.	PART NUMBER	DESCRIPTION	QTY.
1	GA4541955	BRAKE COVER, FRONT AXLE 2WD	1
2	GA5049165	SHCS M12 X 16 GR12.9 ZP	4
3	GA5000577	WASHER 12MM FLAT SS HD	4
4	GA5011473	BHCS M8 X 25 SS A2-70	2
5	GA5003643	WASHER 8MM FLAT SS HD	4
6	GA5004917	NUT M8 NYLOC ZP	2
7	GA4404855	STIFFENER, BRAKE COVER, FRONT AXLE 2WD/4WD	1

Brakes - Covers - Front 4WD

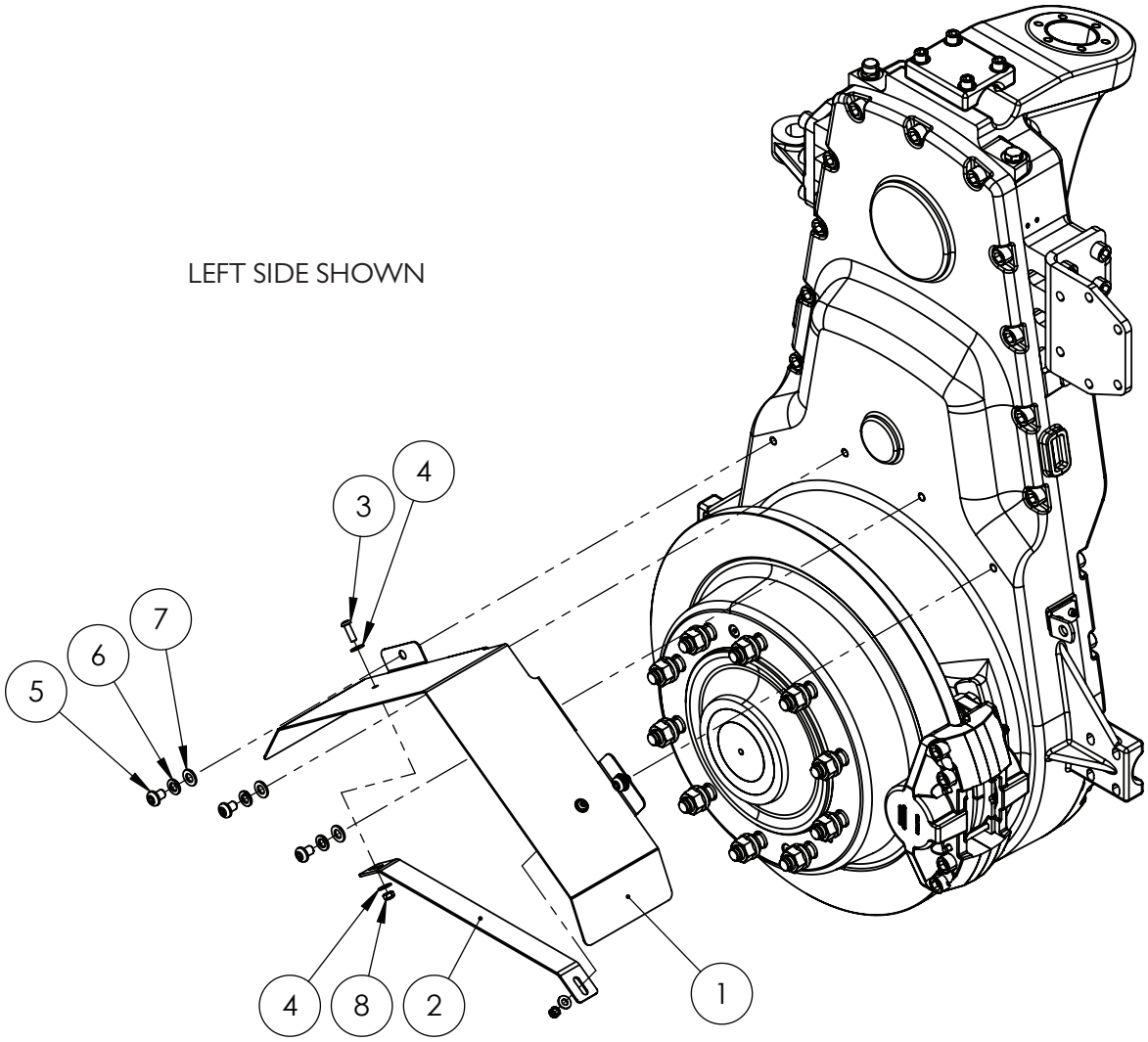

Quantities shown are per side.

ITEM NO.	PART NUMBER	DESCRIPTION	QTY.
1	GA4406805	BRAKE MUD DEFLECTORS, 4WD FRONT	1
2	GA4404855	STIFFENER, BRAKE COVER, FRONT AXLE 2WD/4WD	1
3	GA5011473	BHCS M8 X 25 SS A2-70	2
4	GA5003643	WASHER 8MM FLAT SS HD	4
5	GA5069890	BHCS M12 X 16 GR12.9 ZP	4
6	GA5000575	WASHER 12MM SPRING SS	4
7	GA5000577	WASHER 12MM FLAT SS HD	4
8	GA5004917	NUT M8 NYLOC ZP	2

Brakes - Covers - Rear 2WD & 4WD

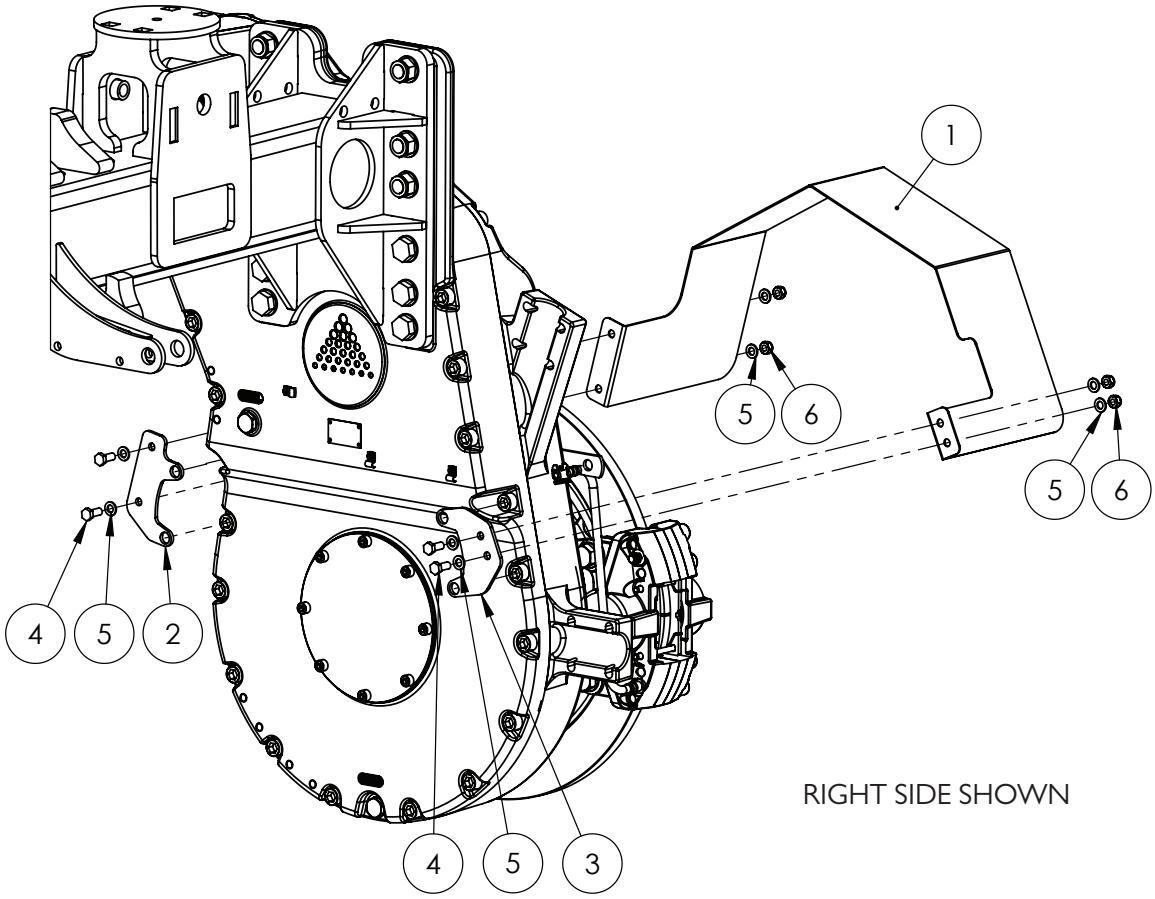

Quantities shown are per side.

ITEM NO.	PART NUMBER	DESCRIPTION	QTY.
1	GA4541960	BRAKE COVER, REAR AXLE 2WD/4WD, RIGHT SIDE	1
	GA4541965	BRAKE COVER, REAR AXLE 2WD/4WD, LEFT SIDE	1
2	GA4541975	MOUNT PLATE, BRAKE COVER, REAR AXLE 2WD/4WD, FRONT SIDE	2
3	GA4541970	MOUNT PLATE, BRAKE COVER, REAR AXLE 2WD/4WD, REAR SIDE	2
4	GA5006161	BOLT M10 X 25 GR8.8 ZP	8
5	GA5000117	WASHER 10MM FLAT SS HD	16
6	GA5000141	NUT M10 NYLOC ZP	8

Brake Line Parts

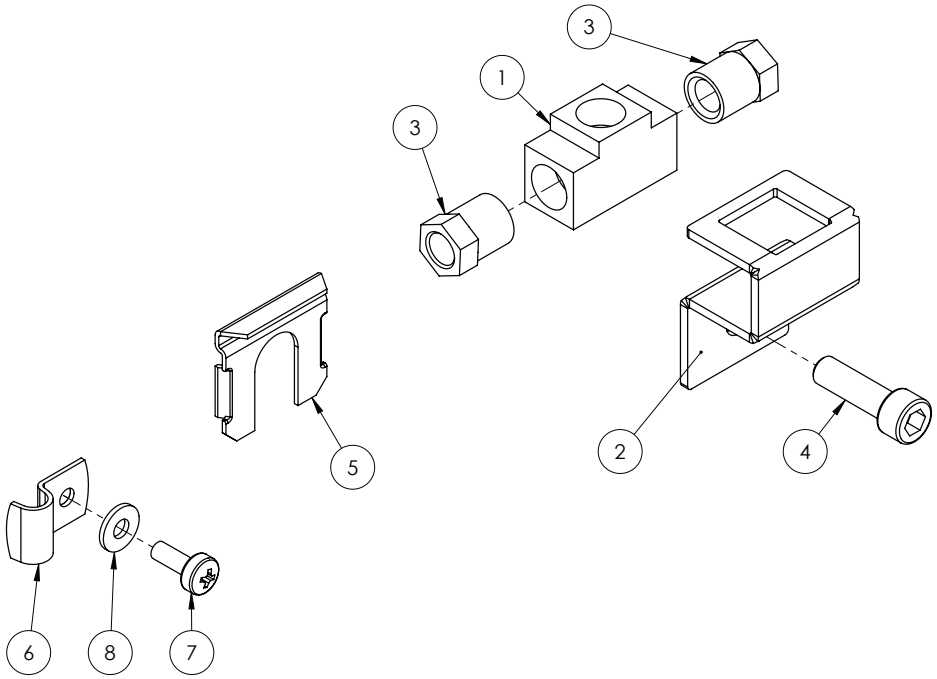

ITEM NO.	PART NUMBER	DESCRIPTION
1	GA5008793	TEE, FLARE, 7/16” 24 TPI FEMALE THREAD, SUIT 1/4” TUBE
2	HYD002LAS	HYDRAULIC FITTING CLAMP BRACKET
3	GA5017019	TUBE NUT 7/16" 24 TPI
4	GA5004055	SHCS M6 X 20 GR12.9 ZP
5	GA5010359	BRAKE HOSE CLIP
6	GA5007205	L529 - CLIP WIRING
7	GA0500166	SCREW, SELF TAP, TORX, PAN HEAD, DIN7500, M4, 8MM, ZP S
8	GA5020510	WASHER 4MM FLAT SS

BRAKE HOSES

POSITION	DRIVE TYPE	PART NUMBER	DESCRIPTION	QTY.
FRONT	2WD	GA5078571	AXLE TO DROP LEG	2
		GA5078570	DROP LEG TO CALIPER	2
	4WD	GA5078571	AXLE TO DROP LEG	2
		GA5078570	DROP LEG TO CALIPER	2
REAR	2WD	GA5078570	DROP LEG TO CALIPER	2
	4WD	GA5078570	DROP LEG TO CALIPER	2

BRAKE HARD LINE

PART NUMBER	DESCRIPTION
GA5006565	BUNDY TUBE, BRAKE LINE, 1/4" (6M ROLL)

Caliper - Service Brakes

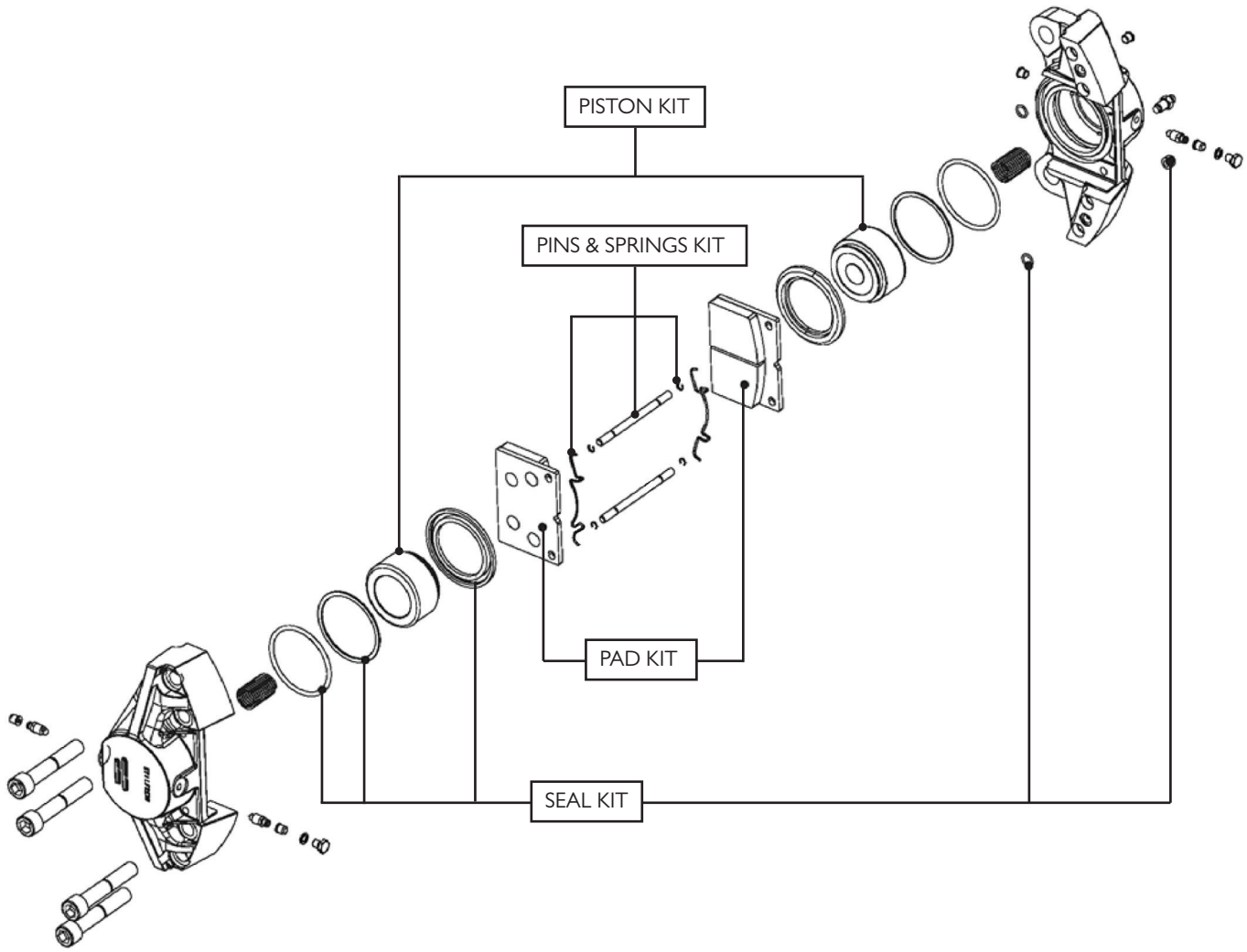

CALIPER COMPLETE

PART NUMBER	DESCRIPTION
GA2700095	BRAKE CALIPER, 2 X 75MM, HYDRAULIC, MINERAL OIL, STILFRENI, GREEN MARK

CALIPER SERVICE PARTS

PART NUMBER	DESCRIPTION
GA5006305	PAD KIT, BRAKES, SUIT JCB & STILFRENI CALIPER, 2 PADS = 1 SET
GA5051430	PINS & SPRINGS KIT, SUIT STILFRENI CALIPER (1 SET)
GA5051435	PISTON KIT, 2 PISTONS, NO SEALS, SUIT STILFRENI CALIPER (1 SET)
GA2700123	SEAL KIT, HYDRAULIC MINERAL OIL ONLY, SUIT STILFRENI BRAKE CALIPER (1 SET)
GA5055645	BRAKE PAD BACKING, ANTI SQUEAL, SELF ADHESIVE, PACK OF 4

Caliper - Park Brake

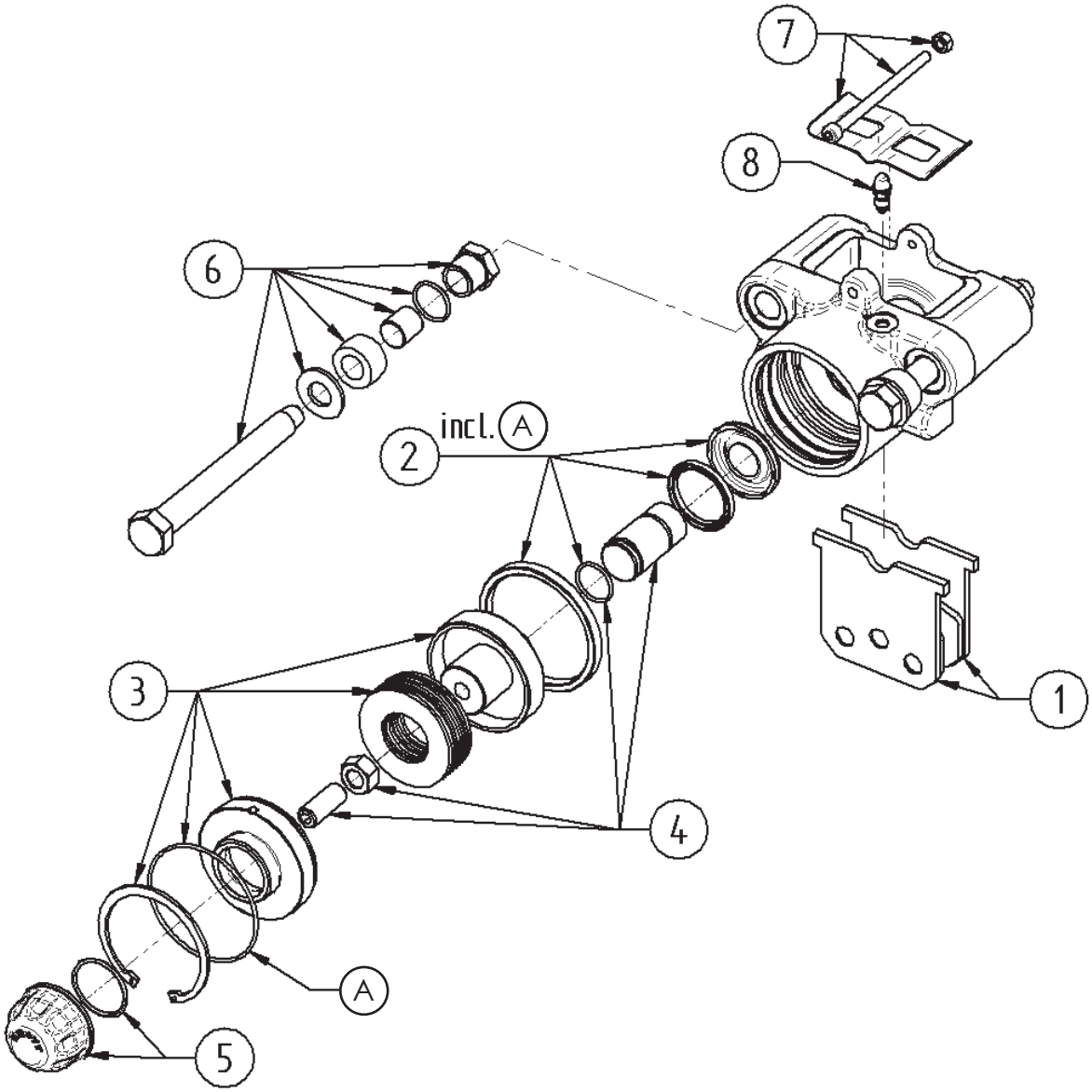

ITEM NO.	PART NUMBER	DESCRIPTION	QTY.
1	GA2700114	BRAKE PAD KIT, 2 PADS	1
2	GA2700115	SEAL KIT - INCLUDES ALL ITEMS MARKED 'A'	1
3	GA2700116	REPAIR KIT, PISTON	1
4	GA2700117	REPAIR KIT, ADJUSTER	1
5	GA2700118	REPAIR KIT, DUST CAP	1
6	GA2700119	REPAIR KIT, MOUNTING HARDWARE	1
7	GA2700120	REPAIR KIT, PAD RETAINER	1
8	GA2700121	BLEED NIPPLE	1

Chapter 24

SERVICE PARTS & INFORMATION

Paint

Air dry 2 pack iso free paint is available to be purchased via the dealers parts account.

Goldacres have the below paint kits available to be purchased by its Goldacres dealer network. Paint can be used with any undercoat and must be used with general purpose thinners

PART NUMBER	DESCRIPTION
GA5078578	PAINT KIT, 2 PACK, 1L, GOLDACRES GREEN, INC TOP COAT AND HARDENER 4:1
GA5078579	PAINT KIT, 2 PACK, 4L, GOLDACRES GREEN, INC TOP COAT AND HARDENER 4:1
GA5078580	PAINT KIT, 2 PACK, 1L, NEUTRAL GREY, INC TOP COAT AND HARDENER 4:1
GA5078581	PAINT KIT, 2 PACK, 4L, NEUTRAL GREY, INC TOP COAT AND HARDENER 4:1
GA5078582	PAINT KIT, 2 PACK, 1L, BLACK, INC TOP COAT AND HARDENER 4:1
GA5078583	PAINT KIT, 2 PACK, 4L, BLACK, INC TOP COAT AND HARDENER 4:1

Goldacres G15 - Corrosion Inhibitor

Originally developed for industry, G15 is a soft film long term rust preventative that's designed to be used on all types of metal to create an almost impenetrable moisture barrier. This makes it the perfect product to keep your machinery rust free and resistant to agricultural chemicals.

It has been proven to withstand exposure to sunlight as well as salt spray. G15 is not an oil, but a thixotropic gel, that sprays as a liquid and then solidifies to a film. It's also non-staining and won't dry out and can be used inside machinery as well as on metal surfaces.

G15 is a water displacing, lubricant and rust preventative suitable for all metals.

It is a contact inhibitor which when applied to the metal surface forms highly polar microscopic platelets, a "fish scale" like structure which provides a soft but virtually impenetrable moisture barrier.

• G15 provides long term corrosion protection.

• Is thermally stable -40°c to + 260°c without cracking, chipping, peeling or sagging.

• Is thixotropic and therefore will not sag or run off. G15 holds onto sharp edges.

• Is UV resistant and has been tested for exterior exposure under adverse conditions and has passed such tests without failure.

• Has good water displacing properties.

• Can be used as a general purpose lubricant.

• Does not stain metal surfaces.

• The application of G15 on metal surfaces will not impair welding arc or oxyacetylene or affect weld strength

PART NUMBER	DESCRIPTION
GA5009289	G15 400G AEROSOL CAN
GA5009289-12	G15 AEROSOL CAN PACK OF 12
GA5025345	G15 FERRO PAK, 5L DRUM
GA5025350	G15 FERRO PAK, 20L DRUM

Service Parts - Lubricants

SERVICE ITEM	SERVICE SPECIFICATION	CAPACITY (L)	PART NO.
ENGINE	SAE 15W-40 HEAVY DUTY ENGINE OIL THAT MEETS CUMMINS STANDARD CES20078 API1 & CI-4	15L	GA5012457 (20L) GA5017913 (200L)
HYDRAULIC OIL	46W DEDICATED HYDRAULIC OIL EG: VALVOLINE ULTRAMAX HVI 46	90L	GA5017199 (200L)
TRANSMISSION	CASTROL ALLISON TRANSYND - TES295	20L APPROX. (DRY)	GA5006959 (20L) GA5006960 (208L)
TRANSFER GEARBOX	SYN FE 75W-90	6.6L	GA5072325 (20L)
DIFFERENTIALS	80W90 EP GEAR OIL - NON LSD	14L (WELDED DIFF CASING)	GA5047310 (200L)
	TITAN SUPERGEAR LS 85W140 HIGH PERFORMANCE FUCHS - LSD	14L (WELDED DIFF CASING)	GA5009421 (20L) GA5009422 (200L)
	80W90 EP GEAR OIL - NON LSD	9.5L (CAST DIFF CASING)	GA5047310 (200L)
	TITAN SUPERGEAR LS 85W140 HIGH PERFORMANCE FUCHS - LSD	9.5L (CAST DIFF CASING)	GA5009421 (20L) GA5009422 (200L)
DRIVEN DROP LEGS	80W90 EP GEAR OIL	36L (FILL TO LEVEL HOLE)	GA5047310 (200L)
GENERAL GREASE POINTS	MULTI-PURPOSE GREASE	-	-
STEERING PIVOT POINTS	MOLYBDENUM BASED GREASE	-	-
COOLANT	TEC PG XL CUMMINS	39L APPROX.	GA5008311 (205L)
SPRAY PUMP	SAE 15W40	2.68L FOR ZETA 260	GA5012457 (20L)
AIR-CONDITIONING UNIT	OIL, SANDEN SP20	571ML DRY	-
	GAS R134A	2KG	-
AUTO GREASER	NGLI 0 - GROENEVELD	4L	-
	NGLI 2 - ALEMLUBE	4KG	-

- For differing weather conditions consult your Cummins operator's manual to choose the suitable oil grade.
- Ensure that lubricants are stored in a place where the lubricants are protected from contamination (such as dirt and moisture). Always use clean containers when handling lubricants.
- Do not mix lubricants. Proper lubrication may be affected by differences in chemical composition.
- Seek advice from your petroleum dealer on the correct use of lubricants and additives.
- At the time of manufacture, G15 anti-corrosion spray is applied to all fasteners (bolts, washers and nuts) and zinc plated components.
- G15 should also be applied to the machine both pre and post season.
- As a guide, application to following areas are recommended but not limited to; Pump mounting bolts, boom rests, left hand pod, mudguard mounting bolts, induction hopper bolts & latches, hydraulic manifold, boom hinge bolts, airbag hose fittings and hydraulic hose crimp fittings etc.

Service Parts - Belts

SERVICE ITEM	PART NO. - GOLDACRES	PART NO. - GENERIC
V BELT, AIR CONDITIONER COMPRESSOR	GA5071435	13A1080
BELT, SERPENTINE, WATER PUMP ALTERNATOR	GA5075275	-
HYDRAULIC PUMP BELT	GA2700098	-

Service Parts - Filters

SERVICE ITEM	PART NO. - GOLDACRES	PART NO. - GENERIC
HYDRAULIC PRESSURE FILTERS	GA5008721 X 3	EXTENDED BOWL FILTER – 0110-D-010-BH3HC
HYDRAULIC RETURN FILTER	GA5069056	-
HYDRAULIC RESERVOIR BREATHER	GA5075450	-
A/C CARBON FILTER	GA5066740	P277
AIR CLEANER PRIMARY ELEMENT	GA5069031	P608666
AIR CLEANER SAFETY ELEMENT	GA5069032	P601560
ENGINE OIL FILTERS	GA5051755	LF3970
TRANSMISSION OIL FILTERS	GA5048281 (SPIN ON)	SERIES 2000 = 29539579 OR HF35296
	GA5048285 (INTERNAL)	SERIES 2000 = 29537966 INTERNAL KIT
FUEL FILTER (PRIMARY)	GA5051760	FS1242
FUEL FILTER (ENGINE)	GA5051765	FF5612 , FF5421
FUEL FILTER IN-LINE	GA5069895	WZ153 (3/8” TAILS)

Service Kits

GA1100062, Service Kit, Series 2 G6, MY20, 50hr

Below parts list show the contents supplied in each service kit

PART NUMBER	DESCRIPTION	QTY
GA5069056	FILTER ELEMENT, HYDRAULIC RETURN	1
GA5008721	FILTER SCREEN, HYDRAULIC PRESSURE, 10 MICRON	3
GA5051755	FILTER, OIL, SUIT CUMMINS QSB ENGINE	1
GA5048281	FILTER, ALLISON TRANSMISSION, SPIN ON, 2000 SERIES (REPLACES GA5048280)	1
GA5051760	FILTER CARTRIDGE, SUIT PRIMARY FUEL FILTER ON SELF PROPELLED WITH QSB	1
GA5069895	FUEL FILTER, INLINE, 3/8 MALE HOSE BARBS, SUIT CROP CRUISER MY11	1
GA5051765	FUEL FILTER, SPIN ON, SUIT QSB ENGINE	1

Service Kits - Continued

GA1100063, SERVICE KIT, SERIES 2 G6, MY20, 250HR & 750HR

PART NUMBER	DESCRIPTION	QTY
GA5051755	FILTER, OIL, SUIT CUMMINS QSB ENGINE	1
GA5051760	FILTER CARTRIDGE, SUIT PRIMARY FUEL FILTER ON SELF PROPELLED WITH QSB	1
GA5069895	FUEL FILTER, INLINE, 3/8 MALE HOSE BARBS, SUIT CROP CRUISER MY11	1
GA5051765	FUEL FILTER, SPIN ON, SUIT QSB ENGINE	1

BELOW PARTS LIST SHOW THE CONTENTS SUPPLIED IN EACH SERVICE KIT

GA1100064, SERVICE KIT, SERIES 2 G6, MY20, 500HR

PART NUMBER	DESCRIPTION	QTY
GA5069056	FILTER ELEMENT, HYDRAULIC RETURN	1
GA5008721	FILTER SCREEN, HYDRAULIC PRESSURE, 10 MICRON	3
GA5075450	BREATHER CAP, OIL RESERVOIR FILLER, HYDAC	1
GA5051755	FILTER, OIL, SUIT CUMMINS QSB ENGINE	1
GA5048281	FILTER, ALLISON TRANSMISSION, SPIN ON, 2000 SERIES (REPLACES GA5048280)	1
GA5051760	FILTER CARTRIDGE, SUIT PRIMARY FUEL FILTER ON SELF PROPELLED WITH QSB	1
GA5051765	FUEL FILTER, SPIN ON, SUIT QSB ENGINE	1
GA5069895	FUEL FILTER, INLINE, 3/8 MALE HOSE BARBS, SUIT CROP CRUISER MY11	1

GA1100065, SERVICE KIT, SERIES 2 G6, MY20, 1000HR

PART NUMBER	DESCRIPTION	QTY
GA5069056	FILTER ELEMENT, HYDRAULIC RETURN	1
GA5008721	FILTER SCREEN, HYDRAULIC PRESSURE, 10 MICRON	3
GA5075450	BREATHER CAP, OIL RESERVOIR FILLER, HYDAC	1
GA5069031	AIR CLEANER PRIMARY ELEMENT, SUIT GA5069030, DONALDSON	1
GA5069032	AIR CLEANER SAFETY ELEMENT, SUIT GA5069030, DONALDSON	1
GA5051755	FILTER, OIL, SUIT CUMMINS QSB ENGINE	1
GA5048281	FILTER, ALLISON TRANSMISSION, SPIN ON, 2000 SERIES (REPLACES GA5048280)	1
GA5051760	FILTER CARTRIDGE, SUIT PRIMARY FUEL FILTER ON SELF PROPELLED WITH QSB	1
GA5051765	FUEL FILTER, SPIN ON, SUIT QSB ENGINE	1
GA5069895	FUEL FILTER, INLINE, 3/8 MALE HOSE BARBS, SUIT CROP CRUISER MY11	1
GA5066740	CARBON FILTER, REPLACEMENT INSERT SUIT DONALDSON	1
GA7000022	CARTRIDGE, AIR DRYER, WABCO, 432.420.220.2	1
GA7000021	FILTER/SILENCER, AIR DRYER, WABCO 432.407.012.0	1
GA5069895	FUEL FILTER, INLINE, 3/8 MALE HOSE BARBS, SUIT CROP CRUISER MY11	1

Service Parts - Headlights

SERVICE ITEM	PART NO. - GOLDACRES	PART NO. - GENERIC
HEADLIGHT GLOBE - LOW BEAM - STANDARD	GA3000082	HB3 12V 60W
HEADLIGHT GLOBE - HIGH BEAM - STANDARD	GA3000082	HB3 12V 60W
HEADLIGHT GLOBE - LOW BEAM - LED	GA3000492	-
HEADLIGHT GLOBE - HIGH BEAM - LED	GA3000492	-

GOLDACRES

www.goldacres.com.au