G4 Crop Cruiser Series 2

Manual GA8701930-REV 00

Product GA6000360 - 4000L

PARTS MANUAL

MY24

GOLDACRES

For further information about any of the products shown please visit - www.goldacres.com.au

© Goldacres Trading 2021
This publication and all designs are copyright.

No part, products or designs may be reproduced by any process except in accordance with the Copyright act 1968.

All information in this operator's manual is based on the latest product information available at the time of printing. The policy of Goldacres is one of continuous improvement and as such, Goldacres reserve the right to alter any specifications and designs without notice and without incurring any obligation regarding such changes.

No part of this manual may be reproduced without written permission from Goldacres. All photographs and technical information remain the property of Goldacres.

Goldacres Trading Pty Ltd
3 Morang Crescent
Mitchell Park Vic 3355
Ph: 03 5342 6399
Fax: 03 5342 6308

Contents

Contents 3

01 - Service & Miscellaneous Parts 13

Miscellaneous Parts, Nozzles. 14
Miscellaneous Parts, Hose. 15
Miscellaneous, Electrical, Replacement Fuse List. 16
Miscellaneous, Paints & Corrosion Inhibitors 17
Service Kits 18
Greasing Miscellaneous 19
Pneumatic Miscellaneous 20

02 - DFO & Sales Kits 22

DFO & Sales Kits 23

03 - Chassis 25

Chassis 26
Access Platform Chassis Mount, Side 27
Access Platform Chassis Mount, Top. 28
Access Ladder Assembly 29
Cylinder Assembly, Pneumatic, Ladder 30
Access Platform Handrails & Side Mirror Mounting 31
Boom Rest Assembly, LH 32
Boom Rest Arm Mounting, RH 33
Boom Rest Arm Assembly, RH 34
Hydraulic Oil Cooler & Ramsay Valve Kit Mounting. 35
Hydraulic Oil Cooler, Frame Mounting 36
Ramsay Valve with Regulator Kit Assembly 37
Hydraulic Manifold, Chassis Control, Mounting 38
Hydraulic Manifold Assembly, Chassis Control, Fixed Axle 39
Hydraulic Manifold Assembly, Chassis Control, Adjustable Axle 40
Brake Line, Chassis Mounting 41
Bonnet Mounting, Bonnet Strap & LED Bar Light 42
Bonnet Stop Hardware & Remote Drain Adaptors 43
Bilberry, Front Camera Mount to Chassis. 44
Cabin Suspension, Reverse Beeper & Raven XRT ABM Chassis Mounting . . 45
Brake Control Valve & Air Tank Mounting 46
Park Brake Control Valve Assembly 47
Air Tank Assembly, Front & Park Brakes. 48
Air Tank Assembly, Rear Brake 49
Fill Pump Chassis Mounting. 50
3” Fill Pump Assembly 51
Spray Pump & Suction Filter, Chassis Mounting, UDOR, Zeta 260. 52
Spray Pump Assembly, UDOR, Zeta 260. 53
Spray Pump & Suction Filter, Chassis Mounting, ARAG, MSP400 54
Spray Pump Assembly, Centrifugal, ARAG, MSP400. 55
Spray Pump & Suction Filter, Chassis Mounting, ACE 650. 56
Spray Pump Assembly, Centrifugal, ACE 650 57
Suction Filter Assembly 58
Transfer Case & Oil Cooler Chassis Mounting 59
Transfer Case, Mounting Brackets & Hardware 60
Oil Cooler Assembly 61
Battery Isolator Key & LED Indicator Mounting. 62
Engine & Transmission, Chassis Mounting 63
Engine Mounts 64
Hydraulic Reservoir Chassis Mounting 65
Primary Fuel Filter Mounting. 66
Primary Fuel Filter Assembly 67
Air Conditioning Condenser, Chassis Mounting 68
Combination Cooler, Chassis Mounting 69

Ride Height Control Valve Mounting, Rear Axle 70
Ride Height Control Valve Assembly, Rear, RH. 71
Ride Height Control Valve Assembly, Rear, LH 72
Ride Height Link, Front Axle (Short) 73
Ride Height Link, Short 74
Ride Height Link, Front Axle (Long) 75
Ride Height Link, Long 76
Air Bag Dump 77
Air Cleaner Mounting 78
Fuel Tank Mounting 79
Fuel Tank Assembly 80
Battery Tray Mounting 81
Battery Tray Assembly 82
Battery Tray Side Cover 83
Battery Cover Assembly 84
Tool Box & Hand Wash Tank Mounting 85
Tool Box Tray Assembly 86
Tool Box, LED Light & PLC Mounting. 87
Tool Box, Strut & Pinchweld. 88
Tool Box Door Assembly 89
Rinse Tank Mounting 90
Tank Fill Shutoff, 3” Front Fill & Pressure Filter Mounting. 91
Tank Fill Shut Off Valve Assembly 92
Pressure Filter Assembly & Mounting Bracket 93
3” Front Fill Inlet Assembly 94
LED Work Light Mounting 95

04 - Pumps 97

Pump, UDOR, Zeta 260, Parts Breakdown 98
Diaphragm Pump, UDOR Zeta 260, Parts List 99
Pump, MSP400, Breakdown 100
Pump, MSP400, Parts List 101
Hypro Fill Pump 102
Hypro Fill Pump 103
Pump, ACE 650F, Hydraulic Drive, Parts Breakdown 104
Pump, ACE 650F, Hydraulic Drive, Parts List 105
Pump, Chemical, Breakdown 106
Pump, Chemical, Parts List 107

05 - Tanks 109

Main Tank , 4000L. 110
Main Tank , 4000L. 111
Tank, 4000L Drilling Guide (Top). 112
Tank, 4000L Drilling Guide (Bottom). 113
Tank Inlet, 1” 114
Tank Inlet Assembly, 1” 115
Tank Inlet, 2” 116
Tank Inlet Assembly, 2” 117
Tank Inlet, Front Fill, 3”. 118
Tank Inlet Assembly, Front Fill, 3” 119
Tank inlet, 3” 120
Tank Inlet Assembly, 3” 121
Agitator Return Assembly 122
Flush & Refill Assembly 123
Super Mix Agitator Assembly. 124
Tank Overflow Assembly, 3”. 125
Tank Rinse Nozzle Assembly, Elbow 126
Tank Rinse Nozzle Assembly, Tee 127
Valve, Breather Assembly 128
Main Tank, 4000L, Hoses 129

Main Tank, Straps & Chassis Mount. 130
Rinse Tank Assembly. 131
Tank, Hand Wash, 70L 132

06 - Side Modules & Controls 134

LH Pod Build Options 135
LH Pod, Chassis Mounting 136
LH Pod, Display Screen & Controls 137
LH Pod, 3” Manual Fill Manifold Assembly, (No Fill Pump or Micromatic) . . .138
LH Pod, 3” Manual Fill Manifold Assembly, (No Fill Pump with Micromatic). .139
LH Pod, 3” Fill Manifold Assembly, (With Fill Pump - Without Micromatic) . .140
LH Pod, 3” Fill Manifold Assembly, (With Fill Pump & Micromatic). 141
3” Fill Manifold Valve Assembly, without Rinse Socket 142
3” Fill Manifold Valve Assembly, with Rinse Socket. 143
Fill Manifold Inlet Assembly 144
LH Pod, Flip Valve Manifold Mounting 145
Flip Valve Manifold Assembly, Fill & Rinse Valve 146
Flip Valve Assembly, Pressure Rinse Valve Manifold 147
Hopper Tee Assembly 148
LH Pod, Blanking Plates 149
Chemical Pump, Outlet Selector & Micromatic Rinse Socket Mounting 150
Chemical Probe & Pump Inlet Assembly 151
Chemical Pump Mounting Bracket Assembly 152
Chemical Pump Electrical Connector & Hose Barb Fitment 153
Valve Assembly, Chemical Pump Outlet Selector 154
LH Pod, Control Manifold & Wash Down Pump Mounting (3TS Options) . . .155
LH Pod, Control Manifold & Wash Down Pump Mounting (Hawkeye Options)156
LH Pod, Flip up Screen Protector 157
Spray Pressure Control Manifold Assembly (3TS Options) 158
Spray Pressure Control Manifold Assembly (Hawkeye Options) 159
Pump Assembly, Wash Down Gun 160
LH Pod, Cover. 161

07 - Plumbing 163

Flow Meter Manifold Assembly, Raven 60P, High Pulse 164
Flow Meter Assembly, Raven 60P, High Pulse 165
Chemical Suction Probe 166
Micromatic Probe, Hose Assembly 167
Arag, 319 Series, Suction Filter 168
Arag, 330 Series, Pressure Filter 169
Fenceline Nozzle Body Assembly, LH, Manual Operated, 1” 170
Fenceline Nozzle Body Assembly, RH, Manual Operated, 1” 171
Fenceline Nozzle Body Assembly, LH, Solenoid Operated, 1” 172
Fenceline Nozzle Body Assembly, RH, Solenoid Operated, 1” 173
Nozzle Body, 1”, Teejet Single Body. 174
Nozzle Body Assembly - Teejet Clock Face Body 175
Nozzle Body Assembly, Altek Dual Spray Body 176
Altek Spray Stop Assembly, 4mm 177
Altek Spray Stop Assembly, 6mm 178
Nozzles, Altek Spray Stop, 6mm in 4mm Out 179
Nozzles, Direct Control, Dual, Altek 180
Nozzles, Direct Control, Dual Assembly 181
Boom Plumbing, 24mt, 250mm Spacing. 182
Boom Plumbing, 24mt, 500mm Broadacre 183
Boom Plumbing, 24mt, 500mm Rowcrop 184
Boom Plumbing, 28mt, 250mm Spacing. 185
Boom Plumbing, 28mt, 500mm Broadacre 186
Boom Plumbing, 28mt, 500mm Rowcrop 187
Boom Plumbing, 30mt, 250mm Spacing. 188
Boom Plumbing, 30mt, 500mm Broadacre 189

Boom Plumbing, 30mt, 500mm Rowcrop 190
Boom Plumbing, 36mt, 250mm Spacing 191
Boom Plumbing, 36mt, 500mm Broadacre 192
Boom Plumbing, 36mt, 500mm Rowcrop 193

08 - Decals 195

Decal Base Kit, GA8701904 (Continued Over Page) 196
Decal Base Kit, GA8701904 (Continued Over Page) 197
Decal Base Kit, GA8701904 198
Decal Kit, Fill Station, GA8701903 199
Decal Kit, Centre Section, GA8701905 200
Decal, Bonnet Kit, GA8701906 & Boom QC Kit, GA8701907 201
Decal Kits, Tank, 24mt & 28mt Kits 202
Decal Kits, Tank, 30mt & 36mt Kits 203
Decal Kit, Weed Detect, GA8701690 204

09 - Electrical 206

Electrical, Lighting - Boom Tip LED's, Tri-Tech Boom 207
Electrical Component Assembly, Power Module, Relay & Fuse 208
Plate Cover, Power Module 209
Beacon, LED 210
Tail Light 211
POD, Work Light 212
Light, LED, Blue, Spot Beam 213
ISO, Electrical Connectors 214
Raven, RCM & XRT Plugs 215
Raven, AMP Plugs 216
Electrical Connectors, Weather Pack 217
Electrical Connectors - Deutsch 218
Electrical Connectors - Deutsch - Parts List 219
Electrical Connectors - Deutsch 220
Electrical Connectors - Deutsch 221

10 - Hydraulic & Pneumatics 223

Hydraulic Reservoir 224
Hydraulic Reservoir Frame, Support Brackets & Wear Strip 225
Hydraulic Reservoir, Tank (Bare) & Service Indicator 226
Hydraulic Reservoir Frame, Side Plates 227
Hydraulic Reservoir Assembly, Level Gauge & Plumbing Adaptors 228
Hydraulic Reservoir Assembly, Return Filter & Gauges 229
Hydraulic Return Filter, Hydac 230
Hydraulic Reservoir Expansion Tank & Secondary Fuel Filter 231
Hydraulic Oil Cooler 232
Hydraulic Manifold Assembly, Chassis Control 233
Hydraulic Pressure Filter, Hydac 234
Pneumatic Manifold 235
Hydraulic Manifold Assembly, Boom Control (Front View) 236
Hydraulic Manifold Assembly, Boom Control (Rear View) 237
Hydraulic Manifold, Boom Control, Function Table 238
Hydraulic Manifold, Boom Control, Function Table 239
Hydraulic Manifold, Boom Control, Factory Set Positions 240
Hydraulic Manifold, Raven XRT Ultraglide 241
Hydraulic Manifold, Bi-Fold, Add on Module 242
Hydraulic Cylinder, Lift 243
Hydraulic Cylinder, Yaw 244
Hydraulic Cylinder, Tilt 245
Hydraulic Cylinder, Fold 246
Hydraulic Cylinder, Centre Level 247
Hydraulic Cylinder, Boom Rest 248

Hydraulic Cylinder, Steering, 2WD, 3mt Axle 249
Hydraulic Cylinder, Steering, 2-3mt Adjustable Axle 250
Hydraulic Cylinder, Steering, 3-4mt Adjustable Axle 251
Hydraulic Cylinder, Steering, 3mt, 4WD Axle 252
Hydraulic Cylinder, Extendable Axle Inner. 253
Hydraulic Cylinder, Bi-Fold 254

11 - Boom Centre 255

Boom Centre Build Options 256
Paralift Arms 257
Hydraulic Cylinder Assembly, Lift 258
Paralift 259
Long Delta Links, Mounting 260
Delta Link, Long 261
Short Delta Links, Mounting. 262
Delta Link, Short 263
Delta Link, Short, Adjustable 264
Hydraulic Yaw Mounting 265
Roll Shockers 266
Boom Centre, Tilt Arm & Tilt Cylinder Mounting 267
Hydraulic Cylinder, Tilt, Greasing Assembly Options. 268
Boom Centre, Fold Cylinder & Fold Ram Mount. 269
Boom Cable Adjuster 270
Centre Level & Manual Grease Block Mounting 271
Boom Centre, Hydraulic Manifold Cover 272
Boom Manifold Assembly and Mounting Bracket. 273
Raven XRT Hydraulic Manifold & Centre Level Chain Mounting 274
Raven XRT, Hydraulic Manifold Assembly 275
Boom Valves, & Pneumatic Hardware Mounting 276
Flow Distributer & Boom Recirculation Valve Assembly 277
Air Pressure Regulator 278
Lower Limit Switch Assembly 279
Boom Height Switch Assembly 280
Boom Centre, Rear View Camera & Work Light Mounting 281
Boom Centre, Spray Bar & Turnbuckles. 282
Boom Cable Spring Damper, 24mt 283
Boom Cable Spring Damper, 28mt - 30mt. 284
Boom Cable Spring Damper, 36mt 285
Oversize Sign 286

12 - Boom Wings 288

Boom Wings 289
Boom Breakaways 290
Boom Wing, 24-30mt, LH Inner, Boom Slide Protectors 291
Boom Wing, 24-30mt, RH Inner, Boom Slide Protectors 292
Boom Wing, 36mt, LH Inner, Boom Slide Protectors 293
Boom Wing, 36mt, RH Inner, Boom Slide Protectors. 294
Boom Light, Boom Mounting Bracket Assembly 295
Raven XRT, Boom Mounting Bracket Assembly. 296
Boom Wing, Inner, LH, 24-36mt, Rose End & Shims 297
Boom Wing, 24-36mt, Fold Adjustment Assembly, LH 298
Boom Wing, 24-36mt, Bi-fold Assembly, LH 299
Boom Wing, Outer, 24-36mt, Wear Plate & Shims, LH 300
Boom Wing, Inner, RH, 24-36mt, Rose End & Shims. 301
Boom Wing, 24-36mt, Fold Adjustment Assembly, RH 302
Boom Wing, 24-36mt, Bi-fold Assembly, RH 303
Boom Wing, Outer, 24-36mt, Wear Plate & Shims, RH 304
Boom Wing, Inner, 24-30mt, Boom Line Clamps & Nozzle Bracket Assembly305
Boom Wing, Inner, 36mt, Boom Line Clamps & Nozzle Bracket Assembly. .306
Boom Wing, Elbow Assemby, 36mt. 307

Boom Wing, 24mt, Outer, Boom Clamps & Nozzle Bracket Assembly 308
Boom Wing, 28-30mt, Outer, Boom Clamps & Nozzle Bracket Assembly . .309
Boom Wing, Outer, 36mt, Boom Line Clamps & Nozzle Bracket Assembly .310
Cable Drum Assembly, LH 311
Cable Drum Assembly, RH 312
Upper Bearing Pivot Kit, Drum Hinge 313
Lower Bearing Pivot Kit, Drum Hinge 314
Boom Wing, Aluminium Outer Mounting 315
Breakaway, Mounting Assembly, LH 316
Breakaway, Mounting Assembly, RH 317
3D Breakaway, Pivot Assembly 318
Boom Fold Support Bracket 319
LH Boom End Protector & Bump Stop 320
RH Boom End Protector & Bump Stop 321
Breakaway, Nozzle Bracket Assembly 322
Boom Cables & Cable Kits 323
Boom Cable Only - Lengths 324

13 - Wheels & Mudguards 325

Rims & Tyres Options 326
Mudguard Axle Mount, Front, Fixed, 2WD 327
Mudguard Axle Mount, Front, 2WD, Adjustable, 2-3mt 328
Mudguard Axle Mount, Front, 2WD, Adjustable, 3-4mt 329
Mudguard Axle Mount, Front & Rear, 4WD 330
Crop Deflectors, Front Axle, 2WD 331
Crop Deflectors, 4WD 332
Crop Dividers - Front Axle, 2WD 333
Crop Dividers - Front Axle, 4WD 334
Crop Dividers - Rear Axle 335
Crop Divider, Nose Cone Assembly 336
Crop Divider, Nose Cone Frame Assembly 337

14 - Induction Hopper 338

Induction Hopper Assembly, Up to S/N 204019 339
Induction Hopper Assembly, From S/N 204020 340
Induction Hopper Tank Assembly 341
Drum Rinse Nozzle Assembly 342
Induction Hopper Lid Assembly 343
Induction Hopper Bottom & Lid Hinges 344
Induction Hopper Bottom, Ball Valve Assembly 345
Wash Down Gun Assembly 346

15 - Engine & Transmission 348

Engine & Transmission 349
Engine, Sump Drain Plug 350
Engine, Fuel Filter, Primary 351
Engine, Fuel Drain Line Adaptors 352
Engine, Ball Valves, Cooling Line, Inlet/Outlet 353
Engine, Plate Bracket & Rubber, Air Cleaner to Turbo 354
Engine, Air Compressor Pump & V-Belt 355
Engine, 24V, Alternator & Engine Pulley Hardware, Billberry 356
Engine, Fan Impeller 357
Engine, Transmission Mounting Bolts 358
Transmission Dipstick Bracket 359
Park Brake Mounting 360
Park Brake Assembly 361
Hydraulic Pump, Assembly 362
Engine Exhaust Pipe Bracket & Hardware 363
Exhaust System, Chassis Mount 364

Exhaust Stack Assembly 365
Combination Cooler, Base Connectors 366
Combination Cooler, Hoses 367
Combination Cooler, Intake, Guards & Mounting Hardware 368
Combination Cooler, Side Mount & Lifting Lug Hardware 369

16 - Driveline 370

Front Axle to Chassis Mounting 371
Rear Axle to Chassis Mounting 372
Front Axle, 2WD, 2mt, Fixed 373
Front Axle, 2WD, 2mt, Fixed, King Pin Assembly 374
Front Axle, 2WD, 2mt, Fixed, Linear Sensor & Brake Line Assembly 375
Front Axle, 2WD, 2mt, Fixed, Steering Cylinder Assembly 376
Front Axle, 2WD, Fixed, 2mt, Torque Rod & Shock Absorber Mounting 377
Front Axle, 2WD, 3mt, Fixed 378
Front Axle, 2WD, 3mt, Fixed, King Pin Assembly 379
Front Axle, 2WD, 3mt, Fixed, Linear Sensor & Brake Line Assembly 380
Front Axle, 2WD, 3mt, Fixed, Steering Cylinder Assembly 381
Front Axle, 2WD, 3mt, Fixed, Torque Rod & Shock Absorber Mounting 382
Front Axle, 2WD, Drop Leg, Hub Mounting Assembly, LH Side 383
Front Axle, 2WD, Drop Leg, Hub Mounting Assembly, RH Side 384
Front Axle, 2WD, 2-3mt Adjustable 385
Front Axle, 2WD, 2-3mt Adjustable, Airbag & Steering Cylinder 386
Front Axle, 2WD, 2-3mt Adjustable, Brake & Brake Line Assembly 387
Front Axle, 2WD, 2-3mt Adjustable, Angle Sensor, Shocker & Torque Rods 388
Front Axle, 2WD, 2-3mt Adjustable, King Pin Assembly 389
Front Axle, 2WD, 2-3mt Adjustable, Extendable Inner, Shims & Side Plates 390
Front Axle, 2WD, 2-3mt Adjustable, Extendable Axle Inner, LH Side 391
Front Axle, 2WD, 2-3mt Adjustable, Extendable Axle Inner, RH Side 392
Extendable Axle Inner, Hydraulic Cylinder Mounting, LH Side 393
Extendable Axle Inner, Hydraulic Cylinder Mounting, RH Side 394
Front Axle, 2WD, 2-3mt Adjustable, Drop Leg, Hub Mounting, LH 395
Front Axle, 2WD, 2-3mt Adjustable, Drop Leg, Hub Mounting, RH 396
Front Axle, 2WD, 3-4mt Adjustable 397
Front Axle Housing Assembly, 2WD, 3-4mt Adjustable 398
Front Axle, 2WD, 3-4mt Adjustable, King Pin Assembly 399
Front Axle, 2WD, 3-4mt Adjustable, Brake & Brake Line Assembly 400
Front Axle, 2WD, 3-4mt Adjustable, Linear Sensor & Phasing Cylinder 401
Front Axle, 2WD, 3-4mt Adjustable, Torque Rods & Shock Absorber 402
Front Axle, 2WD, 3-4mt Adjustable, Drop Leg, Hub Mounting, LH 403
Front Axle, 2WD, 3-4mt Adjustable, Drop Leg, Hub Mounting, RH 404
Hub, 90 Series, Un-Braked, G4 Series 2 405
Front Axle, 4WD, 3mt 406
Axle Housing Assembly, 4WD, 3mt, Front, LH 407
Axle Housing Assembly, 4WD, 3mt, Front, RH 408
Front Axle Housings to Differential Centre Mounting, 4WD, 3mt 409
Front Axle, 4WD, 3mt, King Pin Assembly 410
Front Axle, 4WD, 3mt, Drop Leg to Axle Mounting 411
Front Axle, 4WD, 3mt, Steering Cylinder Assembly 412
Front Axle, 4WD, 3mt, Linear Sensor & Air Breather 413
Front Axle, 4WD, 3mt, Brake Rotor & Brake Lines 414
Front Axle, 4WD, 3mt, Suspension Mounting 415
Front Axle, 4WD, 3mt, Linkage Arms 416
Front Drop Leg, Internal Drive Assembly, 4WD, 3mt, LH 417
Front Drop Leg, Internal Drive Assembly, 4WD, 3mt, RH 418
Front Drop Leg, 4WD, 3mt, Cover Plates, LH 419
Front Drop Leg, 4WD, 3mt, Cover Plates, RH Side 420
Rear Axle, 2mt 421
Rear Axle, 2mt, Diff Centre Mounting 422
Rear Axle, 2mt, Drop Leg Mounting 423

Rear Axle, 2mt, Breather, Diff Drain & Brake Line Assembly 424
Rear Axle, 2mt, Shock Absorber & Drive Shaft Mounting 425
Rear Axle, 2mt, Sway Bar, Torque Rod & Tow Bar Mounting 426
Rear Axle, 2WD & 4WD, 3mt, Fixed 427
Rear Axle, 2WD & 4WD, 3mt, Fixed, Diff Centre Mounting 428
Rear Axle, 2WD & 4WD, 3mt, Fixed, Diff Drain & Brake Line Assembly 429
Rear Axle, 2WD & 4WD, 3mt, Fixed, Drive Shaft & Shocker Mounting 430
Rear Axle, 2WD & 4WD, 3mt, Fixed, Sway Bar, Torque Rod & Towbar 431
Rear Axle, 2WD & 4WD, 3mt, Fixed, Linkage Arms 432
Rear Axle, 2WD & 4WD, 3mt, Fixed, Drop Leg Mounting 433
Rear Axle, Adjustable, 2-3mt 434
Rear Axle, Adjustable Inner, 2-3mt, Shims & Slider Plates 435
Rear Extendable Axle Inner, 2-3mt, RH Side 436
Rear Extendable Axle Inner, 2-3mt, LH Side 437
Rear Extendable Axle Inner, Hydraulic Cylinder Mounting, 2-3mt, RH Side. .438
Rear Extendable Axle Inner, Hydraulic Cylinder Mounting, 2-3mt, LH Side . .439
Cylinder Hydraulic, Extendable Axle with Ram Extension 440
Rear Axle, 2-3mt, Adjustable, Differential Centre Mounting, Dromos 441
Rear Axle, 2-3mt, Adjustable, Drop Leg Mounting 442
Rear Axle, 2-3mt, Adjustable, Breather & Brake Line Hardware 443
Rear Axle, 2-3mt, Adjustable, Sway Bar & Torque Rod Mounting. 444
Rear Axle, 3-4mt, Manual Adjust 445
Rear Axle, 3-4mt, Manual Adjust, Differential Centre Mounting. 446
Rear Axle, 3-4mt, Manual Adjust, Drop Leg Mounting 447
Rear Axle, 3-4mt, Manual Adjust, Diff Drain & Air Spring 448
Rear Axle, 3-4mt, Manual Adjust, Drive Shaft & Shocker Mounting 449
Rear Axle, 3-4mt, Manual Adjust, Sway Bar & Linkage Arms 450
Sway Bar Assembly. 451
Torque Rod Assembly, 650mm 452
Torque Rod Assembly, 500mm 453
Rear Axle, 2WD & 4WD, Drop Leg Cover Plates, LH Side 454
Rear Axle, 2WD & 4WD, Drop Leg Cover Plates, RH Side 455
Rear Axle, 2WD & 4WD, Drop Leg, Internal Drive Assembly, LH Side. 456
Rear Axle, 2WD & 4WD, Drop Leg, Internal Drive Assembly, RH Side 457
Planetary Hub, JCB 458
Rear Axle, Driveshaft Assembly, Dromos 459
Rear Axle, Differential Assembly, Dromos 460
Rear Axle, Differential Assembly, Dromos, Parts List 461
Rear Axle, Differential Assembly, JCB 462
Rear Axle, Differential Assembly, JCB, Parts List 463
Planetary Hub, JCB 464
Drive Shaft, 2WD, (Dromos Differential) 465
Drive Shaft, 2WD, (JCB Differential) 466
Drive Shaft, Transmission to Centre Bearing, 2WD (JCB Differential) 467
Drive Shaft, Transmission to JCB Differential 468
Drive Shaft, 4WD, (JCB Differential) 469
Drive Shaft, Centre Bearing to Transfer Case, 4WD 470
Drive Shaft, Transmission to Centre Bearing, 4WD. 471
Drive Shaft, Transfer Case to Diff Centre, Front, 4WD 472
Transfer Case, Dromos, Upper Drive Assembly 473
Transfer Case, Dromos, Upper Drive Assembly, Parts List 474
Transfer Case, Dromos, Disengagement Casing Assembly 475
Transfer Case, Dromos, Disengagement Casing Assembly, Parts List 476
Transfer Case, Dromos, Bottom Drive Assembly 477
Transfer Case, Dromos, Lubrication Pump Assembly. 478

17 - Cabin 479

Cabin, Chassis Mounting & Beacon. 480
Claas Cabin, Front View 481
Claas Cabin, Rear View 482
Claas Cabin, Extinguisher, Cover Plates 483
Claas Cabin, LED Light Bar & Front Working Light Mounting 484

Claas Cabin, Rear Work Light Mounting 485
Claas Cabin, Washer Bottle & Air Intake. 486
ISO Connector Plate & Plug. 487
Claas Cabin Roof Mount, John Deere 488
Claas Cabin, Cup Holder & Master Key Locking Cylinder. 489
Claas Cabin, GPS Accessories Bar 490
Claas Cabin, Bracket, Fuse Box Cover Mount 491
Claas Cabin, Seat & Side Console. 492
Claas Cabin, Seat, Upper Assembly 493
Claas Cabin, Seat, Lower Assembly 494
Side Console, Gear Selector & Switch Panel 495
Side Console, Boom Switches 496
Side Console, G-Hub Display Assembly 497
Side Console, Joystick Assembly 498
Cabin Foot Rest 499
Pedal Assembly. 500
Brake Unit, Foot Valve Assembly, Air Actuated. 501
Claas Cabin, Carbon Filter Assembly, 12v, Ultraguard (Up to S/N 105885) .502
Claas Cabin, Carbon Filter, 12v, Ultraguard (Up to S/N 105885) 503
Claas Cabin, Carbon Filter, 12v, Ultraguard (From S/N 105886). 504

18 - Brakes 506

Brake Booster Mounting 507
Brake Booster Assembly, Right Hand Orientation 508
Brake Booster Assembly, Left Hand Orientation. 509
Brake Booster Assembly, Orientation B 510
Brake Booster Assembly, Orientation C 511
Brake Caliper, Stilfreni 512
Brake Caliper, JCB 513
Brake Caliper, Dromos. 514

19 - Bilberry 515

Mounting Frame, Front Camera, Bilberry 516
Front Camera Mounting, Bilberry 517
Billberry Module, Ethernet Switch & PLC Mounting 518
Bilberry CALC Module Mounting, LH Boom Wing 519
Bilberry CALC Module Mounting, RH Boom Wing 520
Mounting Plate, Bilberry CALC Module 521
Rubber Stopper, Cam Post Rest, Bilberry 522
Outer Camera Mount, Bilberry 523
Camera Post Assembly, CAM 1 - 4, Bilberry 524
Camera Post Assembly, CAM 5 & 6, Bilberry. 525
Camera Post Assembly, LH, CAM 7, Bilberry. 526
Camera Post Assembly, RH, CAM 8, Bilberry 527
Camera Post Assembly, LH, CAM 9, Bilberry. 528
Camera Post Assembly, RH, CAM 10, Bilberry 529
Camera Post Assembly, LH, CAM 11, Bilberry. 530
Camera Post Assembly, RH, CAM 12, Bilberry 531
Lower Post Assembly, Folding, 250mm, Bilberry 532
Camera Mount Assembly, Bilberry 533
Bilberry, Camera Positioning, LH 534
Bilberry, Camera Positioning, RH 535

20 - Height Control 536

Raven XRT, Rotary & Angle Sensor Mounting 537
Raven XRT Boom Modules & Centre Section Height Sensor 538
Raven XRT, Expansion Module Mounting. 539

21 - Schematics 540

Hydraulic Schematic, Chassis, Fixed Axle 541
Hydraulic Schematic, Chassis, Adjustable Axle 542

Hydraulic Schematic, Tank and Pumps 543
Hydraulic Schematic, Boom Manifold 544
Hydraulic Schematic, Raven XRT Manifold 545
Hydraulic Schematic, Cooler, Transfer Case. 546
Plumbing Schematic, Diaphragm Pump, (No Weedetect Option). 547
Plumbing Schematic, Diaphragm Pump, (No Weedetect Option). 548
Plumbing Schematic, Centrifugal Pump, (No Weedetect Option) 549
Plumbing Schematic, Centrifugal Pump, (No Weedetect Option) 550
Plumbing Schematic, Centrifugal Pump, (Weedetect with Raven 3TS). 551
Plumbing Schematic, Centrifugal Pump, (Weedetect with Raven 3TS). 552
Plumbing Schematic, Centrifugal Pump, (Weedetect with Hawkeye) 553
Plumbing Schematic, Centrifugal Pump, (Weedetect with Hawkeye) 554
Electrical Schematic, Raven Hawkeye 555
Electrical Schematic, Raven RCM System 556
Electrical Schematic, Boom Options 557
Electrical Schematic, Raven XRT Boom Leveling 558
Electrical Schematic, Autosteer 559
Electrical Schematic, Claas Cabin 560
Electrical Schematic, Claas Cabin (Pin Outs) 561
Electrical Schematic, Claas Cabin Harness, Main 562
Electrical Schematic, Cabin Fuse Box 563
Electrical Schematic, Side Console Harness 564
Electrical Schematic, Side Console Operations 565
Electrical Harness, Ignition Harness. 566
Electrical Schematic, Battery Kit Harness 567
Electrical Schematic, Main Chassis 568
Electrical Schematic, Bilberry System 569
Electrical Schematic, Bilberry, RCM Based System 570
Electrical Schematic, Bilberry, Hawkeye System 571
Electrical Schematic, Bilberry, Connection Layout, 36m. 572
Electrical Schematic, Main PLC 573
Electrical Schematic, Bonnet 574
Electrical Schematic, Rear View Camera & Console Harnesses 575
Electrical Schematic, Transmission 576
Electrical Schematic, Boom Centre 577
Electrical Schematic, Chassis Hydraulics. 578
Electrical Schematics, Boom Hydraulics 579
Electrical Harness, CANBUS Network 580
Electrical Schematic, Control Modules. 581
Electrical Harnesses 582
Schematic, Engine Cooling System 583

22 - Sprayer Options 584

Sprayer Options Index. 585
Goldacres Terms & Conditions of Sale & Warranty 586

01 - Service & Miscellaneous Parts

Miscellaneous Parts, Nozzles

TEEJET NOZZLES	
PART NUMBER	DESCRIPTION
GA8100267	NOZZLE TIP, XR TEEJET, GREEN 015, POLYMER, XR110015-VP
GA8100272	NOZZLE TIP, XR TEEJET, YELLOW 02, POLYMER, XR11002-VP
GA8100275	NOZZLE TIP, XR TEEJET, BLUE 03, POLYMER, XR11003-VP
GA8100278	NOZZLE TIP, XR TEEJET, RED 04, POLYMER, XR11004-VP
GA8100280	NOZZLE TIP, XR TEEJET, BROWN 05, POLYMER, XR11005-VP
GA8100282	NOZZLE TIP, XR TEEJET, GREY 06, POLYMER, XR11006-VP
GA8100284	NOZZLE TIP, XR TEEJET, WHITE 08, POLYMER, XR11008-VP
GA8100429	NOZZLE TIP, AIXR TEEJET, GREEN 015, POLYMER, AIXR110015VP
GA8100431	NOZZLE TIP, AIXR TEEJET, YELLOW 02, POLYMER., AIXR11002VP
GA8100430	NOZZLE TIP, AIXR TEEJET, VIOLET 025, POLYMER, AIXR110025VP
GA8100432	NOZZLE TIP, AIXR TEEJET, BLUE 03, POLYMER, AIXR11003VP
GA8100433	NOZZLE TIP, AIXR TEEJET, RED 04, POLYMER, AIXR11004-VP
GA8100434	NOZZLE TIP, AIXR TEEJET, BROWN 05, POLYMER, AIXR11005VP
GA8100387	NOZZLE TIP, AI TEEJET, GREEN 015, SS, AI110015-VS
GA8100389	NOZZLE TIP, AI TEEJET, YELLOW 02, SS, AI11002-VS
GA8100388	NOZZLE TIP, AI TEEJET, VIOLET 025, SS, AI110025-VS
GA8100390	NOZZLE TIP, AI TEEJET, BLUE 03, SS, AI11003-VS
GA8100391	NOZZLE TIP, AI TEEJET, RED 04, SS, AI11004-VS
GA8100392	NOZZLE TIP, AI TEEJET, BROWN 05, SS, AI11005-VS
GA8100393	NOZZLE TIP, AI TEEJET, GREY 06, SS, AI11006-VS
GA8100394	NOZZLE TIP, AI TEEJET, WHITE 08, SS, AI11008-VS
GA8100225	NOZZLE TIP, TTI TEEJET, GREEN 015, POLYMER, TTI110015-VP
GA8100227	NOZZLE TIP, TTI TEEJET, YELLOW 02, POLYMER, TTI11002-VP
GA8100226	NOZZLE TIP, TTI TEEJET, VIOLET 025, POLYMER, TTI110025-VP
GA8100228	NOZZLE TIP, TTI TEEJET, BLUE 03, POLYMER, TTI11003-VP
GA8100229	NOZZLE TIP, TTI TEEJET, RED 04, POLYMER, TTI11004-VP
GA8100230	NOZZLE TIP, TTI TEEJET, BROWN 05, POLYMER, TTI11005-VP
GA8100693	NOZZLE TIP, TP4003E-SS, STAINLESS STEEL 03, 40 DEGREE, TEEJET
GA8100699	NOZZLE TIP, TP4004E-SS, STAINLESS STEEL 04, 40 DEGREE, TEEJET
GA8100703	NOZZLE TIP, CFLD-XC4003, COMPACT FAN LOW DRIFT, BLUE, ARAG
GA8100704	NOZZLE TIP, CFLD-XC4004, COMPACT FAN LOW DRIFT, RED, ARAG

LECHLER NOZZLES	
PART NUMBER	DESCRIPTION
GA8100000	NOZZLE TIP, AIR INJECTOR ID3 120-01, ORANGE, POLYMER, LECHLER
GA8100001	NOZZLE TIP, AIR INJECTOR ID3 120-015, GREEN, POLYMER, LECHLER
GA8100002	NOZZLE TIP, AIR INJECTOR ID3 120-02, YELLOW, POLYMER, LECHLER
GA8100003	NOZZLE TIP, AIR INJECTOR ID3 120-025, PURPLE, POLYMER, LECHLER
GA8100004	NOZZLE TIP, AIR INJECTOR ID3 120-03, BLUE, POLYMER, LECHLER
GA8100005	NOZZLE TIP, AIR INJECTOR ID3 120-04, RED, POLYMER, LECHLER
GA8100006	NOZZLE TIP, AIR INJECTOR ID3 120-05, BROWN, POLYMER, LECHLER
GA8100007	NOZZLE TIP, AIR INJECTOR ID3 120-06, GREY, POLYMER, LECHLER
GA8100008	NOZZLE TIP, AIR INJECTOR ID3 120-08, WHITE, POLYMER, LECHLER
GA8100018	NOZZLE TIP, AIR INJECTOR COMPACT IDK 120-01, ORANGE, POLYMER, LECHLER
GA8100019	NOZZLE TIP, AIR INJECTOR COMPACT IDK 120-015, GREEN, POLYMER, LECHLER
GA8100020	NOZZLE TIP, AIR INJECTOR COMPACT IDK 120-02, YELLOW, POLYMER, LECHLER
GA8100021	NOZZLE TIP, AIR INJECTOR COMPACT IDK 120-025, PURPLE, POLYMER, LECHLER
GA8100022	NOZZLE TIP, AIR INJECTOR COMPACT IDK 120-03, BLUE, POLYMER, LECHLER
GA8100023	NOZZLE TIP, AIR INJECTOR COMPACT IDK 120-04, RED, POLYMER, LECHLER
GA8100024	NOZZLE TIP, AIR INJECTOR COMPACT IDK 120-05, BROWN, POLYMER, LECHLER
GA8100025	NOZZLE TIP, AIR INJECTOR COMPACT IDK 120-06, GREY, POLYMER, LECHLER
GA8100026	NOZZLE TIP, AIR INJECTOR COMPACT IDK 120-08, WHITE, POLYMER, LECHLER
FILTERS	
GA5076947	CHECK VALVE, 5PSI, FILTER, NOZZLE TIP, 50 MESH SCREEN, TEEJET, 4193B-PP-5-50SS
GA5077158	FILTER, NOZZLE TIP, 24 MESH, POLYPROPYLENE, SS, TEEJET, 8079-PP-24
GA5077159	FILTER, NOZZLE TIP, 50 MESH, POLYPROPYLENE, SS, TEEJET, 8079-PP-50
GA5077160	FILTER, NOZZLE TIP, 80 MESH, POLYPROPYLENE, SS, TEEJET, 8079-PP-80
GA5077156	FILTER, NOZZLE TIP, 100 MESH, POLYPROPYLENE, SS, TEEJET, 8079-PP-100
GA5077157	FILTER, NOZZLE TIP, 200 MESH, POLYPROPYLENE, SS, TEEJET, 8079-PP-200
CAPS	
GA8100443	NOZZLE CAP, BLACK, TEEJET, SUIT TJ60, AI, AIUB, SJ3, DG TWINJET, TTI, AITTJ60, CP114442-1-CE
GA8100464	NOZZLE CAP, BLACK, TEEJET, SUIT FLAT SPRAY SMALLER CAPACITY NOZZLES (UP TO 08), CP114440-1-CE
GA8100059	NOZZLE CAP, 10mm ACROSS FLATS, BLACK, LECHLER
WASHER	
GA5055245	WASHER, NOZZLE CAP SEAL, RUBBER, 19 OD X 9 ID, SUIT TEE JET NOZZLE, REPLACES CP19438-EPR

GA7800001 GOLDACRES	MISCELLANEOUS PARTS, NOZZLES, WASHERS, FILTERS & CAPS	REV 00

PART NUMBER	DESCRIPTION
SUCTION HOSE	
GA2000218	HOSE, SUCTION, WIRE REINFORCED, 20mm, BLACK, HOS20S, SOLD PER METER, 20M IN A ROLL
GA2000222	HOSE, SUCTION, 25mm, WIRE REINFORCED, HOS25S, SOLD PER METER, 20M IN A ROLL
GA2000224	HOSE, SUCTION, 32mm, WIRE REINFORCED, HOS32S, SOLD PER METER, 20M IN A ROLL
GA2000226	HOSE, SUCTION, 38mm, WIRE REINFORCED, HOS38S, SOLD PER METER, 20M IN A ROLL
GA2000229	HOSE, SUCTION, 51mm, WIRE REINFORCED, HOS51S, SOLD PER METER, 20M IN A ROLL
GA2000230	HOSE 63mm SUCTION (WIRE REINFORCED), HOS63S, SOLD PER METER,
GA2000232	HOSE, SUCTION, 75mm, WIRE REINFORCED, HOS75S, SOLD PER METER, 20M IN A ROLL
NOTE: SUCTION HOSE CAN BE IDENTIFIED BY ITS EXTERNAL GREEN STRIPE AND WIRE REINFORCEMENT.	
PRESSURE HOSE	
GA2000200	HOSE, PRESSURE, 7mm, BLACK (250PSI), HOS7P
GA2000211	HOSE, PRESSURE, 12mm, BLACK, 250PSI, HOS13P, SOLD PER METER, ROLL = 250M
GA2000216	HOSE, PRESSURE, 20mm, BLACK 250PSI, HOS20P, SOLD PER METER, ROLL = 100M.
GA2000219	HOSE, PRESSURE, 25mm, BLACK 250PSI, HOS25P, SOLD PER METER, 100M IN A ROLL.
GA2000223	HOSE, PRESSURE, 32mm BLACK (250 PSI), HOS32P, SOLD PER METER, 60M IN A ROLL.
GA2000225	HOSE, PRESSURE, 38mm BLACK (250 PSI), HOS38P, SOLD PER METER, 20M IN A ROLL
NOTE: PRESSURE HOSE CAN BE IDENTIFIED BY ITS BLUE INTERNAL LAYER.	
PVC HOSE	
GA2000220	HOSE, SUCTION, PVC, 25mm, BLACK, HOS25PVC, SOLD PER METER, 30M IN A ROLL.
GA2000227	HOSE, SUCTION, PVC, 40mm, BLACK, HOS40PVC, SOLD PER METER, 20M IN A ROLL
GA2000228	HOSE, PVC, 50mm, BLACK, HOS50PVC, SOLD PER METER, 20M IN A ROLL
GA2000231	HOSE, SUCTION, PVC, 75mm, BLACK, HOS75PVC, SOLD PER METER
NOTE: PVC HOSE CAN BE IDENTIFIED BY ITS RIBBED OUTER SURFACE.	
SIGHT TUBE HOSE	
GA2000209	HOSE, CLEAR, 12mm, SIGHT TUBE, HOS12SIGHT, SOLD PER METER, ROLL = 20M
GA2000210	HOSE, 12mm, CLEAR, WIRE REINFORCED, HOS12WSIGHT, SOLD PER METER, ROLL = 20M

PART NUMBER	DESCRIPTION
LAY FLAT HOSE	
GA2000220	HOSE, SUCTION, PVC, 25mm, BLACK, HOS25PVC, SOLD PER METER, 30M IN A ROLL.
HOSE CLAMPS	
GA5004865	HOSE CLAMP, 3/8,SS (8-16/9W)
GA5000469	HOSE CLAMP, 1/2" SS 12-20/9W3
GA5000999	HOSE CLAMP, 3/4" SS (16-27/12W)
GA5001681	HOSE CLAMP, 1" SS (20-32/12W)
GA5016813	HOSE CLAMP, 1 SS LARGE (25-40/12W)
GA5002783	HOSE CLAMP, 1 1/4, SS (30-45/13W)
GA5002873	HOSE CLAMP, 1 1/2" SS (32-50/12W)
GA5003325	HOSE CLAMP, 2 SS, (40-60/12W)
GA5016815	HOSE CLAMP, 50-70 /12 C7 W4, SS
GA5004241	HOSE CLAMP, 60-80mm, S/S 31/2
CABLE TIES	
GA5002173	CABLE TIE BLACK 100 X 2.5 [C]
GA5003517	CABLE TIE BLACK 140 X 3.5 [C]
GA5004455	CABLE TIES BLACK 190 X 4.5 mm [C]
GA5000685	CABLE TIE BLACK 320 X 7.5mm [C]
GA5000687	CABLE TIE, BLACK, 370X 4.8mm [C] 100PK
GA5021235	CABLE TIE BLACK 540 X 7.5mm [C]
SPIRAL GUARD	
GA5015669	SPIRAL GUARD, 20mm, BLACK
BRAKE LINE (BUNDY TUBE)	
GA5006565	BUNDY TUBE, BRAKE LINE, 1/4 (6m ROLL)
PNEUMATIC HOSE	
GA7000016	HOSE, PNEUMATIC, 3/8", BLACK NYLON, ABT06, AIR BRAKE CORPORATION
GA3500180	HOSE, HI TEMP, MULTIFLUID, 1/4", BLUE,
GA3500181	HOSE, HI TEMP, MULTIFLUID, 1/2", BLUE, RQP18

GA7800002 GOLDACRES	HOSE LIST, PARTS MANUALS	REV 00.B

Miscellaneous, Electrical, Replacement Fuse List

PART NUMBER	DESCRIPTION	PART NUMBER	DESCRIPTION
GA5052515	FUSE MINI BLADE 15 AMP (52715)	GA3000403	FUSE, JCASE, 20A
GA5052510	FUSE MINI BLADE 10 AMP (52710)	GA3000402	FUSE, JCASE, 30A
GA5052520	FUSE MINI BLADE 20 AMP (52720)	GA3000337	FUSE, JCASE, 40A
GA3000471	FUSE, ANS, 100 AMP	GA3000935	FUSE, JCASE, 50A, RED
GA3000336	FUSE, ANS, 150AMP	GA3000936	FUSE, JCASE, 60A, YELLOW
GA3000397	FUSE, ANS, 50AMP, LITTLEFUSE 53806	GA3000425	FUSE, MINI BLADE, 2 AMP, 52702
GA5050820	FUSE, BLADE 30 AMP	GA3000395	FUSE, MINI BLADE, 3 AMP, 52703
GA3001033	FUSE, BLADE, 1 AMP, PWR-ATO-FU-1AZ	GA3000396	FUSE, MINI BLADE, 5 AMP, 52705
GA5011981	FUSE, BLADE, 10 AMP (52810)	GA0100037	FUSE. BLADE, 5 AMP (PACK 50)
GA5012003	FUSE, BLADE, 15 AMP (52815)	GA5049370	NARVA 100 AMP MAXI BLADE FUSE
GA5012005	FUSE, BLADE, 20 AMP	GA5022447	NARVA 20 AMP MAXI BLADE FUSE
GA5055490	FUSE, BLADE, 25 AMP	GA5022448	NARVA 30 AMP MAXI BLADE FUSE
GA3001034	FUSE, BLADE, 4 AMP, PWR-ATO-FU-4AZ	GA5075185	NARVA 40 AMP MAXI BLADE FUSE
GA5075235	FUSE, BLADE, 40 AMP (52840)	GA5049365	NARVA 60 AMP MAXI BLADE FUSE
GA5078879	FUSE, BLADE, 7.5 AMP, (52807)	GA5012039	NARVA 80 AMP MAXI BLADE FUSE
GA5053115	FUSE HOLDER MINI BLADE INLINE		

Miscellaneous, Paints & Corrosion Inhibitors

PART NUMBER	DESCRIPTION
PAINT & PAINT KITS	
GA5078578	PAINT KIT, 2 PACK, 1L, GOLDACRES GREEN, INC TOP COAT AND HARDENER 4:1
GA5078579	PAINT KIT, 2 PACK, 4L, GOLDACRES GREEN, INC TOP COAT AND HARDENER 4:1
GA5078580	PAINT KIT, 2 PACK, 1L, NEUTRAL GREY, INC TOP COAT AND HARDENER 4:1
GA5078581	PAINT KIT, 2 PACK, 4L, NEUTRAL GREY, INC TOP COAT AND HARDENER 4:1
GA5078582	PAINT KIT, 2 PACK, 1L, BLACK, INC TOP COAT AND HARDENER 4:1
GA5078583	PAINT KIT, 2 PACK, 4L, BLACK, INC TOP COAT AND HARDENER 4:1
GA5026738	PAINT, TB510 1L, CLAAS CABIN GREY
GA5078587	PAINT, 2 PACK HARDENER, 1L
GA5026739	PAINT, SPRAY CAN, ENAMEL, TB510 CLAAS CABIN GREY
CORROSION INHIBITOR	
GA5009289	RUST PREVENTATIVE, G15, 400G AEROSOL PACK [C]
GA5009289-12	RUST PREVENTATIVE, G15, 400G BOX OF 12
GA5025345	G15 FERRO PAK, 5L DRUM
GA5025350	G15 FERRO PAK, 20L DRUM
ELECTRICAL CORROSION INHIBITORS	
GA3000494	ELECTRICAL SPRAY, ANTI CORROSION, LUBRICANT, 450G, CRC 2.26
GA0100028	BATTERY TERMINAL PROTECTOR SPRAY, ANTI CORROSION, YELLOW FILM, CRC 5098, 300G, CRC 5098 [C]

Service Kits

PART NUMBER	DESCRIPTION	QTY
GA1100079	SERVICE KIT, SERIES 2 G4, 50HR	
GA5069056	FILTER ELEMENT, HYDRAULIC RETURN TO SUIT TANK MOUNTED FILTER GA5069055, HYDAC	1
GA3501114	FILTER ELEMENT, HYDRAULIC PRESSURE FILTER, PRO S2, HYDAC, 1250491	1
GA5051755	FILTER, OIL, SUIT CUMMINS QSB ENGINE	1
GA5048281	FILTER, ALLISON TRANSMISSION, SPIN ON, 2000 SERIES (REPLACES GA5048280)	1
GA2700193	FILTER, FUEL, SECONDARY, CUMMINS B4.5L, FF63054NN	1
GA2700192	FILTER, FUEL, PRIMARY, CUMMINS B4.5L, FS1098	1
GA8700724	DECAL, NEXT SERVICE INDICATOR, SELF PROPELLED	1
GA1100080	SERVICE KIT, SERIES 2 G4, 250HR & 750HR	
GA5051755	FILTER, OIL, SUIT CUMMINS QSB ENGINE	1
GA2700193	FILTER, FUEL, SECONDARY, CUMMINS B4.5L, FF63054NN	1
GA2700192	FILTER, FUEL, PRIMARY, CUMMINS B4.5L, FS1098	1
GA8700724	DECAL, NEXT SERVICE INDICATOR, SELF PROPELLED	1
GA1100081	SERVICE KIT, SERIES 2 G4, 500HR	
GA5069056	FILTER ELEMENT, HYDRAULIC RETURN TO SUIT TANK MOUNTED FILTER GA5069055, HYDAC	1
GA3501114	FILTER ELEMENT, HYDRAULIC PRESSURE FILTER, PRO S2, HYDAC, 1250491	1
GA5075450	BREATHER CAP, OIL RESERVOIR FILLER, HYDAC	1
GA5051755	FILTER, OIL, SUIT CUMMINS QSB ENGINE	1
GA5048281	FILTER, ALLISON TRANSMISSION, SPIN ON, 2000 SERIES (REPLACES GA5048280)	1
GA2700193	FILTER, FUEL, SECONDARY, CUMMINS B4.5L, FF63054NN	1
GA2700192	FILTER, FUEL, PRIMARY, CUMMINS B4.5L, FS1098	1
GA8700724	DECAL, NEXT SERVICE INDICATOR, SELF PROPELLED	1

PART NUMBER	DESCRIPTION	QTY
GA1100082	SERVICE KIT, SERIES 2 G4, 1000HR	
GA5069056	FILTER ELEMENT, HYDRAULIC RETURN TO SUIT TANK MOUNTED FILTER GA5069055, HYDAC	1
GA3501114	FILTER ELEMENT, HYDRAULIC PRESSURE FILTER, PRO S2, HYDAC, 1250491	1
GA5075450	BREATHER CAP, OIL RESERVOIR FILLER, HYDAC	1
GA5071700	FILTER, AIR CLEANER ENGINE PRIMARY LARGE AF26120, G3 G4 SERIES	1
GA5071705	FILTER, AIR CLEANER ENGINE SECONDARY SMALL AF26121, G3 G4 SERIES	1
GA5051755	FILTER, OIL, SUIT CUMMINS QSB ENGINE	1
GA5048281	FILTER, ALLISON TRANSMISSION, SPIN ON, 2000 SERIES (REPLACES GA5048280)	1
GA2700193	FILTER, FUEL, SECONDARY, CUMMINS B4.5L, FF63054NN	1
GA2700192	FILTER, FUEL, PRIMARY, CUMMINS B4.5L, FS1098	1
GA5066740	CARBON FILTER, REPLACEMENT INSERT SUIT DONALDSON	1
GA5071435	V BELT, AIR CONDITIONER, 13A1080, G3 G4	1
GA8700724	DECAL, NEXT SERVICE INDICATOR, SELF PROPELLED	1

GA7800241 GOLDACRES	SERVICE KITS, CROP CRUISER, G4 SERIES 2	REV

Greasing Miscellaneous

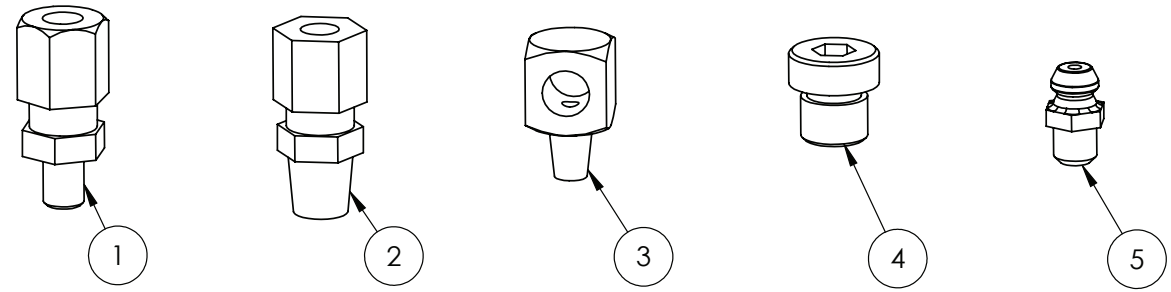

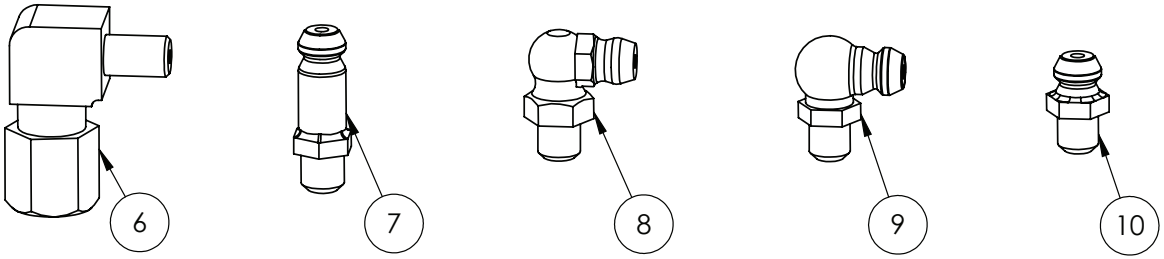

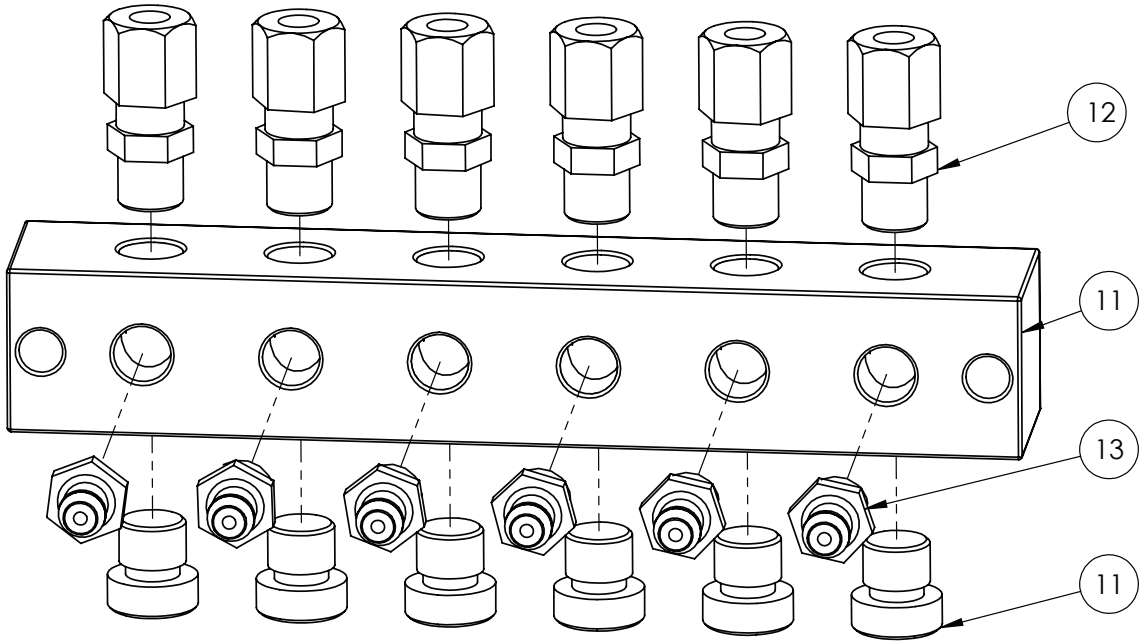

OPTIONAL PARTS			
ITEM	PART NUMBER	DESCRIPTION	QTY
-	GA5070005	GREASE LINE 6mm PRE FILLED (50M/ROLL)	-

IF DESCRIPTION PREFIX IS ASSEMBLY DRAWING ONLY OR PRODUCTION DRAWING ONLY THE ITEM IS NOT FOR SALE			
ITEM	PART NUMBER	DESCRIPTION	QTY
1	GA5069985	GREASE FITTING, LINE CONNECTOR, STRAIGHT 6mm	1
2	GA5071695	COUPLING, MALE STUD, OLIVE TYPE, AUTO GREASER	1
3	GA5071690	ELBOW, M6 X M8 CONNECTOR STUD, AUTO GREASE	1
4	GA5070000-2	PLUG, GREASE HEADER BLOCK	1
5	GA5012203	GREASE NIPPLE, SHORT, 1/4 UNF, MACH0207	1
6	GA5069995	GREASE FITTING, ELBOW 90 DEGREE, LINE CONNECTOR 6mm	1
7	GA5009639	GREASE NIPPLE 1/4" UNF SHORT	1
8	GA5009637	GREASE NIPPLE, ELBOW, 90 DEGREE, 1/4 UNF MALE, MACH02	1
9	GA5051970	GREASE NIPPLE 1/4" UNF LONG	1
10	GA5050450	GREASE NIPPLE, 6mm	1
11	GA5070000	GREASE FITTING HEADER BLOCK 6 WAY, INC. 6mm LINE ADAPTORS AND STRAIGHT GREASE NIPPLES AND PLUGS	1
12	GA5055225	PNEUMATIC FITTING, STRAIGHT ADAPTOR, 1/8 BSP MALE THREAD X NUT RETAINER SUIT 6 mm TUBE	1
13	GA5069980	GREASE NIPPLE, 1/8 BSPP, STRAIGHT	1
GA7800056 GOLDACRES		GREASING, MISCELLANEOUS	REV 00

Pneumatic Miscellaneous

OPTIONAL PARTS			
ITEM	PART NUMBER	DESCRIPTION	QTY
-	GA5004384	TUBE, NYLON, 4mm, BLACK	-
-	GA5004386	TUBE, NYLON, 4mm, BLUE	-
-	GA5004383	TUBE, NYLON, 6mm, BLACK	-
-	GA5004385	TUBE, NYLON, 6mm, BLUE	-
-	GA7000002	TUBE, NYLON, 6mm, RED	-
-	GA5004382	TUBE, NYLON, 8mm, BLACK	-
-	GA7000016	HOSE, PNEUMATIC, 3/8", BLACK NYLON 150m ROLL, ABT06, AIR BRAKE CORPORATION	

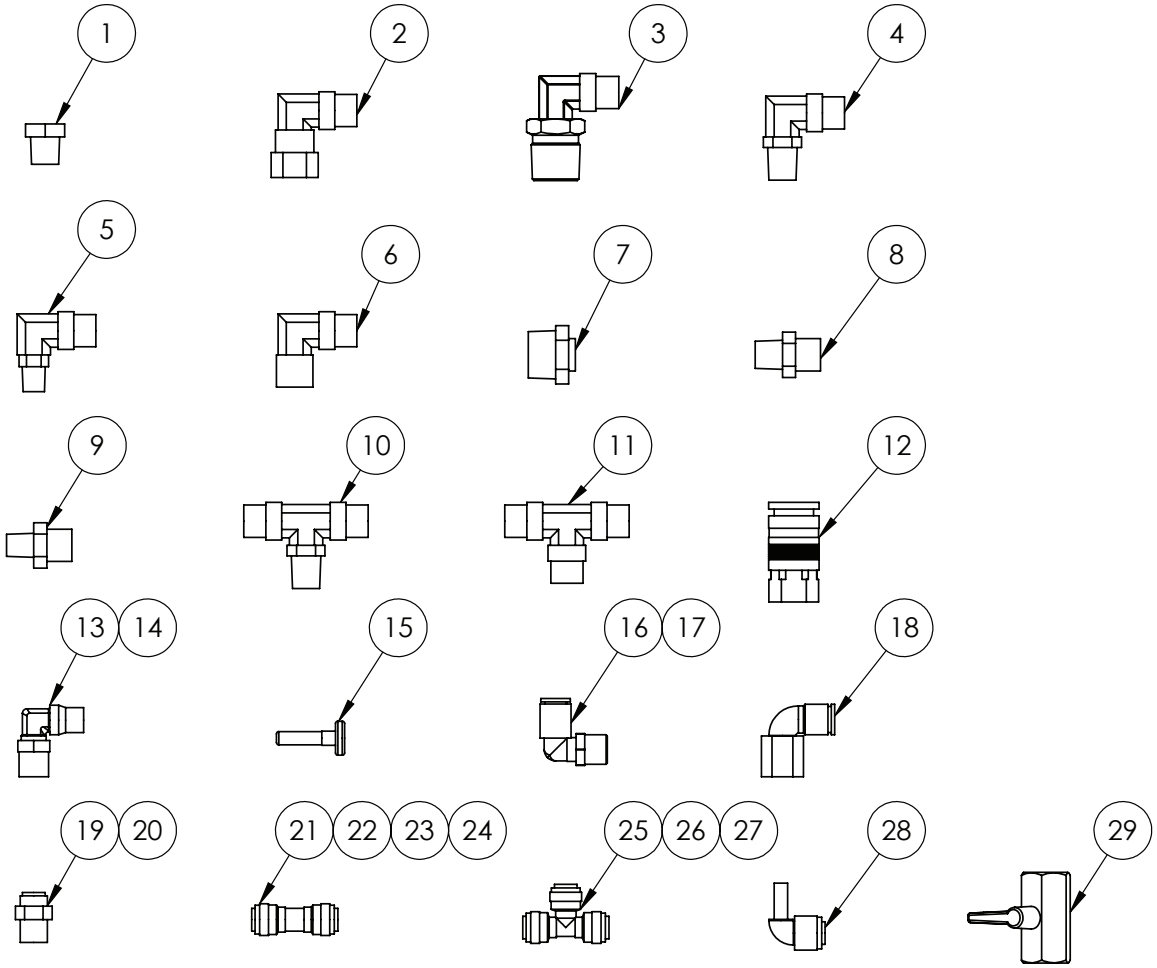

IF DESCRIPTION PREFIX IS ASSEMBLY DRAWING ONLY OR PRODUCTION DRAWING ONLY THE ITEM IS NOT FOR SALE			
ITEM	PART NUMBER	DESCRIPTION	QTY
1	GA5071207	BREATHER, SILENCER, 1/4 BUTTON	1
2	GA5078522	AIR FITTING, ELBOW, SWIVEL 3/8" TUBE, 1/4" NPT FEMALE, PUSH IN, BRASS, ALKON - AQ70-DOTS-6X4	1
3	GA5078524	AIR FITTING, ELBOW, SWIVEL, 3/8" TUBE, 1/2" NPT MALE, PUSH IN, BRASS, ALKON - AQ69-DOTS-6X8	1
4	GA5078518	AIR FITTING, ELBOW, SWIVEL, 3/8" TUBE, 1/4" NPT MALE, PUSH IN, BRASS, ALKON - AQ69-DOTS-6X4	1
5	GA5078525	AIR FITTING, ELBOW, SWIVEL, 3/8" TUBE, 1/8" NPT MALE, PUSH IN, BRASS, ALKON - AQ69-DOTS-6X2	1
6	GA5078519	AIR FITTING, ELBOW, 3/8" TUBE, 1/4" NPT FEMALE, PUSH IN, BRASS, ALKON AQ70-DOT-6X4	1
7	GA5078520	AIR FITTING, STRAIGHT, 3/8" TUBE, 1/2" NPT MALE, BRASS, ALKON - AQ68-DOT-6X8	1
8	GA5078517	AIR FITTING, STRAIGHT, 3/8" TUBE, 1/4" NPT MALE, PUSH IN, BRASS, ALKON - AQ68-DOT-6X4	1
9	GA5078523	AIR FITTING, STRAIGHT, 3/8" TUBE, 1/8" NPT MALE, BRASS, ALKON AQ68-DOT-6X2	1
10	GA5078521	AIR FITTING, TEE, SWIVEL, 3/8" TUBE, 1/4" NPT MALE, PUSH IN, BRASS, ALKON - AQ72-DOTS-6X4	1
11	GA5078516	AIR FITTING, TEE, 3/8" TUBE, PUSH IN, BRASS, ALKON - AQ64-DOT-6	1
12	GA5076620	COUPLING, AIR, 1/4" BSPP FEMALE X FEMALE, BRASS, 200	1
13	GA5016233	PNEUMATIC FITTING, ELBOW, 90 DEGREE, 1/4 BSP MALE X 6mm PUSH IN TYPE, METAL	1
14	GA5052690	PNEUMATIC FITTING, ELBOW, 90 DEGREE, 1/4 BSP MALE X 8mm PUSH TYPE, METAL	1
15	GA5004405	PLUG PUSH IN 6mm	1
16	GA5052690	PNEUMATIC FITTING, ELBOW, 90 DEGREE, 1/4 BSP MALE X 8mm PUSH TYPE, METAL	1
17	GA5078524	AIR FITTING, ELBOW, SWIVEL, 3/8" TUBE, 1/2" NPT MALE, PUSH IN, BRASS, ALKON - AQ69-DOTS-6X8	
18	GA7000015	PNEUMATIC FITTING, FEMALE 1/4" BSPP X 8mm PUSH IN, FEMALE STUD ELBOW	1
19	GA5045140	PNEUMATIC FITTING, NIPPLE, PUSH IN 6mm X 1/4" BSPT, BRASS	1
20	GA5050210	PNEUMATIC FITTING, NIPPLE, 1/8 BSPP MALE X 6mm PUSH IN TYPE	1
21	GA5066991	PNEUMATIC FITTING, PUSH IN, JOINER, 6mm	1
22	GA5078922	PNEUMATIC FITTING, 3/8", PUSH IN, EQUAL JOINER, PLASTIC	1
23	GA5054600	PUSH IN FITTING, REDUCER, STRAIGHT, 6mm TO 4mm	1
24	GA5065175	PUSH IN FITTING, REDUCER, STRAIGHT, 8mm TO 6mm	1
25	GA5016246	TEE, EQUAL, 4mm PUSH IN TYPE, BLACK PLASTIC	1
26	GA5016245	TEE EQUAL PUSH IN 6mm	1
27	GA5067010	TEE, EQUAL, 8mm PUSH IN TYPE, BLACK PLASTIC	1
28	GA5078518	AIR FITTING, ELBOW, SWIVEL, 3/8" TUBE, 1/4" NPT MALE, PUSH IN, BRASS, ALKON - AQ69-DOTS-6X4	1
29	GA5018321	BALL VALVE, 1/4" FEMALE, BLACK LEVER HANDLE, CHROMED	1
GA7800053 GOLDACRES		PNEUMATIC MISCELLANEOUS	REV 00

02 - DFO & Sales Kits

GA1000077	DFO, RAVEN XRT, BOOM LEVELLING, SUIT 36M BOOM, G4 SERIES 2	
GA1000080	DFO, BI-FOLD WITH CENTRE LEVEL, SUIT, CROP CRUISER, G4 SERIES 2	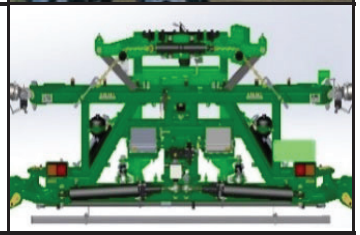
GA1000081	DFO, 3" FILL PUMP, SUIT, CROP CRUISER, G4 SERIES 2	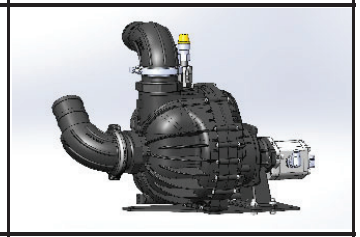
GA1000082	DFO KIT, CHEMICAL PUMP, SOTERA, SUIT, CROP CRUISER, G4 SERIES 2	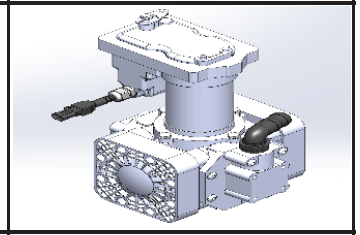
GA1000087	DFO KIT, 3" FRONT FILL, SUIT, CROP CRUISER, G4 SERIES 2	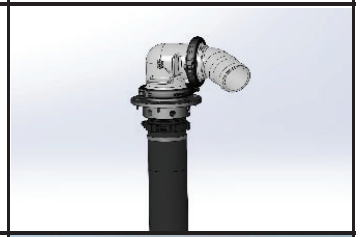
GA1000088	DFO KIT, BILBERRY, WEEDETECT, SUIT, CROP CRUISER, G4 SERIES 2	

03 - Chassis

Chassis

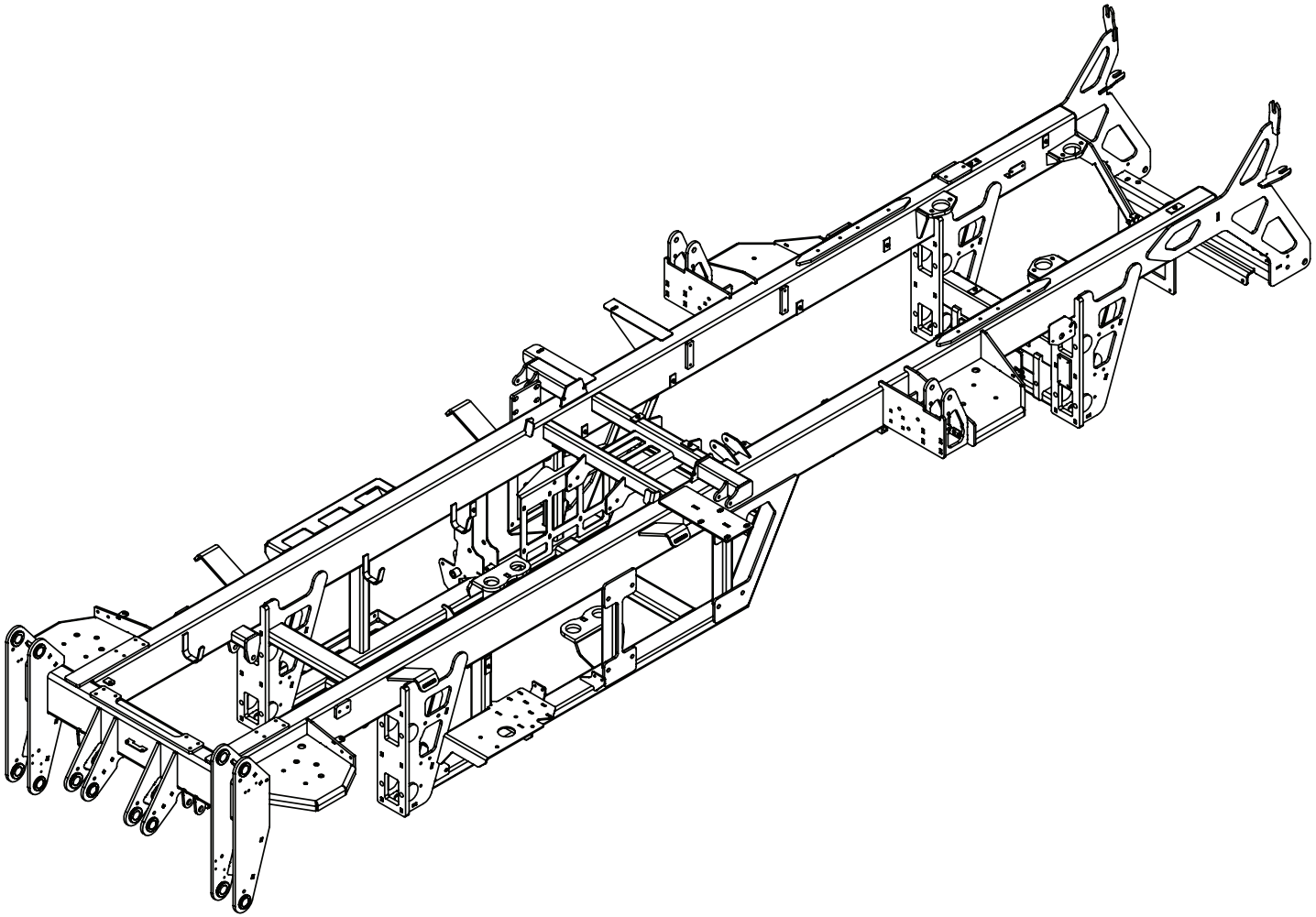

GA4604240 GOLDACRES	ASSEMBLY DRAWING ONLY. CHASSIS, 2WD AND 4WD, G4, S2 MY24	REV 00

Access Platform Chassis Mount, Side

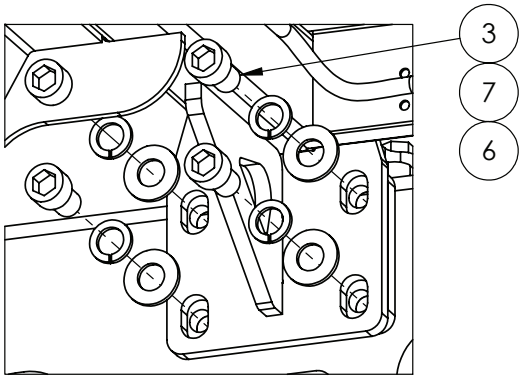

DETAIL A

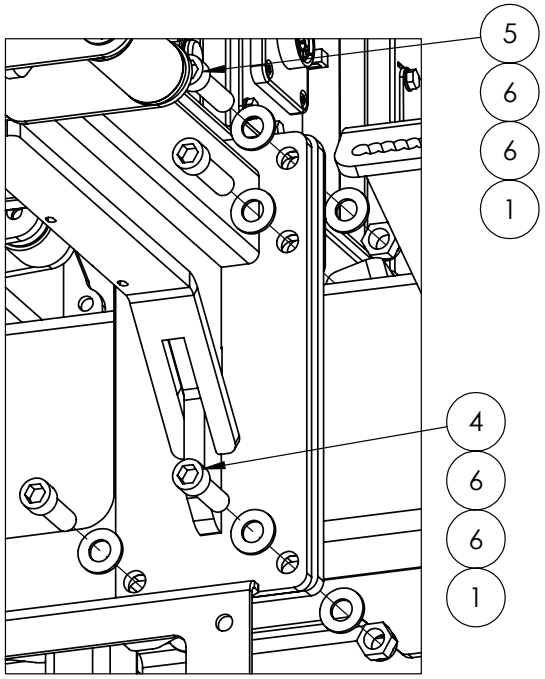

DETAIL B

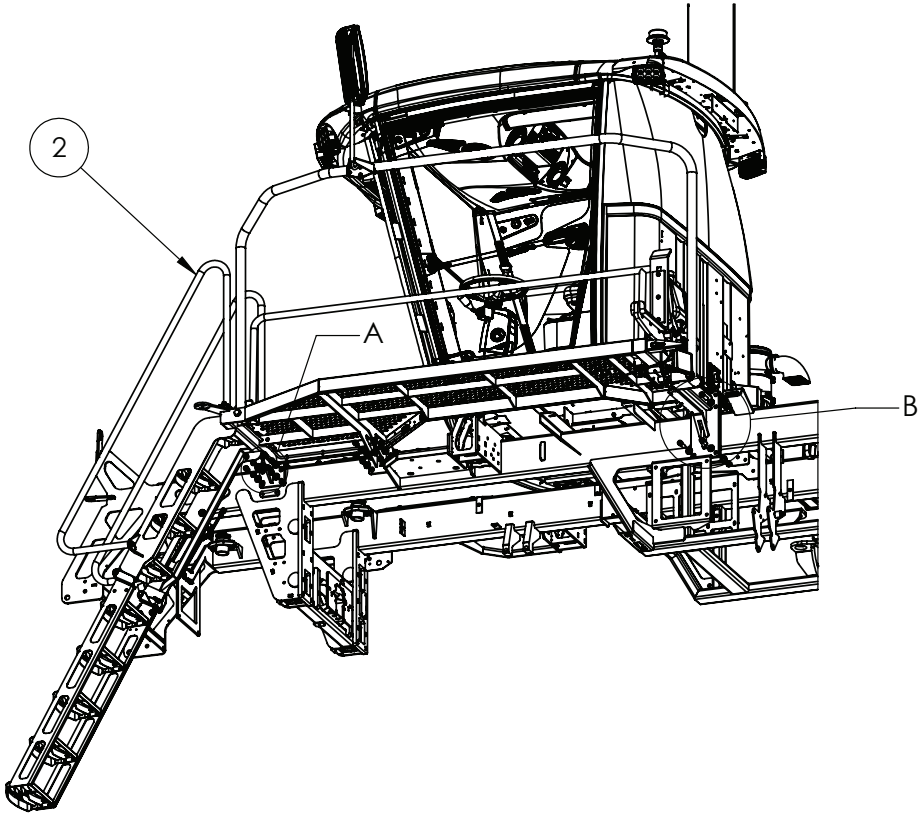

IF DESCRIPTION PREFIX IS ASSEMBLY DRAWING ONLY OR PRODUCTION DRAWING ONLY THE ITEM IS NOT FOR SALE			
ITEM	PART NUMBER	DESCRIPTION	QTY
1	GA5001029	NUT M16 NYLOC ZP	6
2	GA4914345	PRODUCTION DRAWING ONLY, PLATFORM, LH CABIN ACCESS, G4, S2	1
3	GA5000905	SHCS M16 x 25 GR12.9 ZP	8
4	GA5000935	SHCS M16 X 50 GR12.9 ZP	2
5	GA5048680	SHCS M16 X 60 GR12.9 ZP	4
6	GA5001043	WASHER 16mm FLAT SS HD	20
7	GA5001051	WASHER 16mm SPRING SS	8
GA7800207 GOLDACRES		ASSEMBLY DRAWING ONLY, LH CABIN ACCESS PLATFORM, CHASSIS MOUNT, G4 S2, MY24	REV 00

Access Platform Chassis Mount, Top

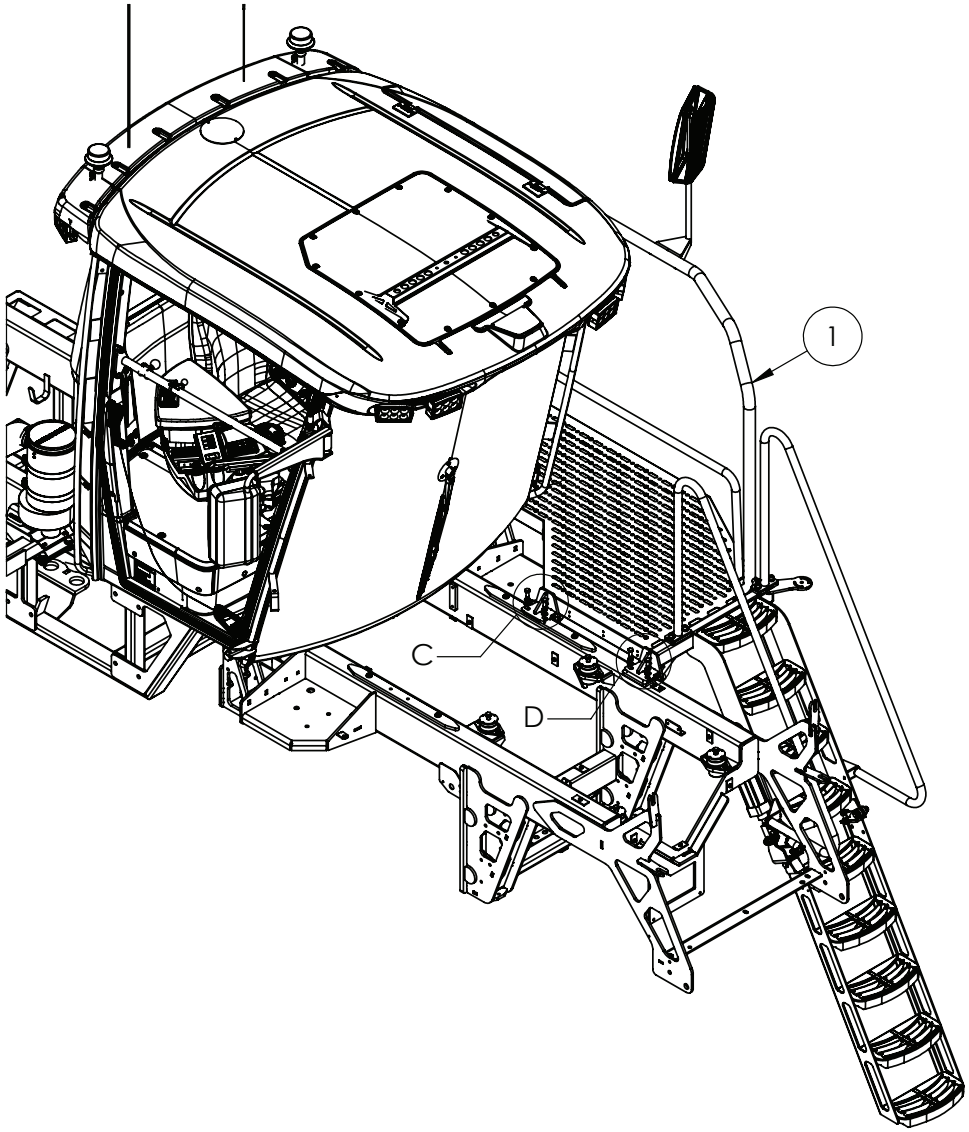

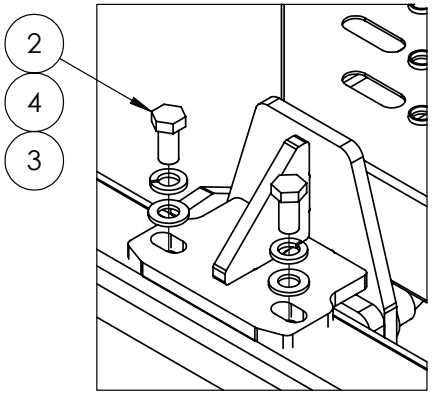

DETAIL C

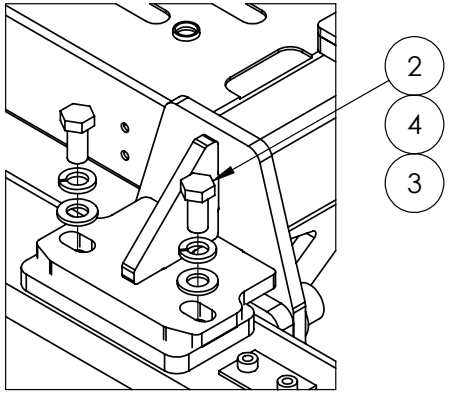

DETAIL D

IF DESCRIPTION PREFIX IS ASSEMBLY DRAWING ONLY OR PRODUCTION DRAWING ONLY THE ITEM IS NOT FOR SALE			
ITEM	PART NUMBER	DESCRIPTION	QTY
1	GA4914345	PRODUCTION DRAWING ONLY, PLATFORM, LH CABIN ACCESS, G4, S2	1
2	GA5011229	BOLT M12 X 25 GR8.8 ZP	4
3	GA5000577	WASHER 12mm FLAT SS HD	4
4	GA5000575	WASHER 12mm SPRING SS	4
GA7800207 GOLDACRES		ASSEMBLY DRAWING ONLY, LH CABIN ACCESS PLATFORM, CHASSIS MOUNT, G4 S2, MY24	REV 00

Access Ladder Assembly

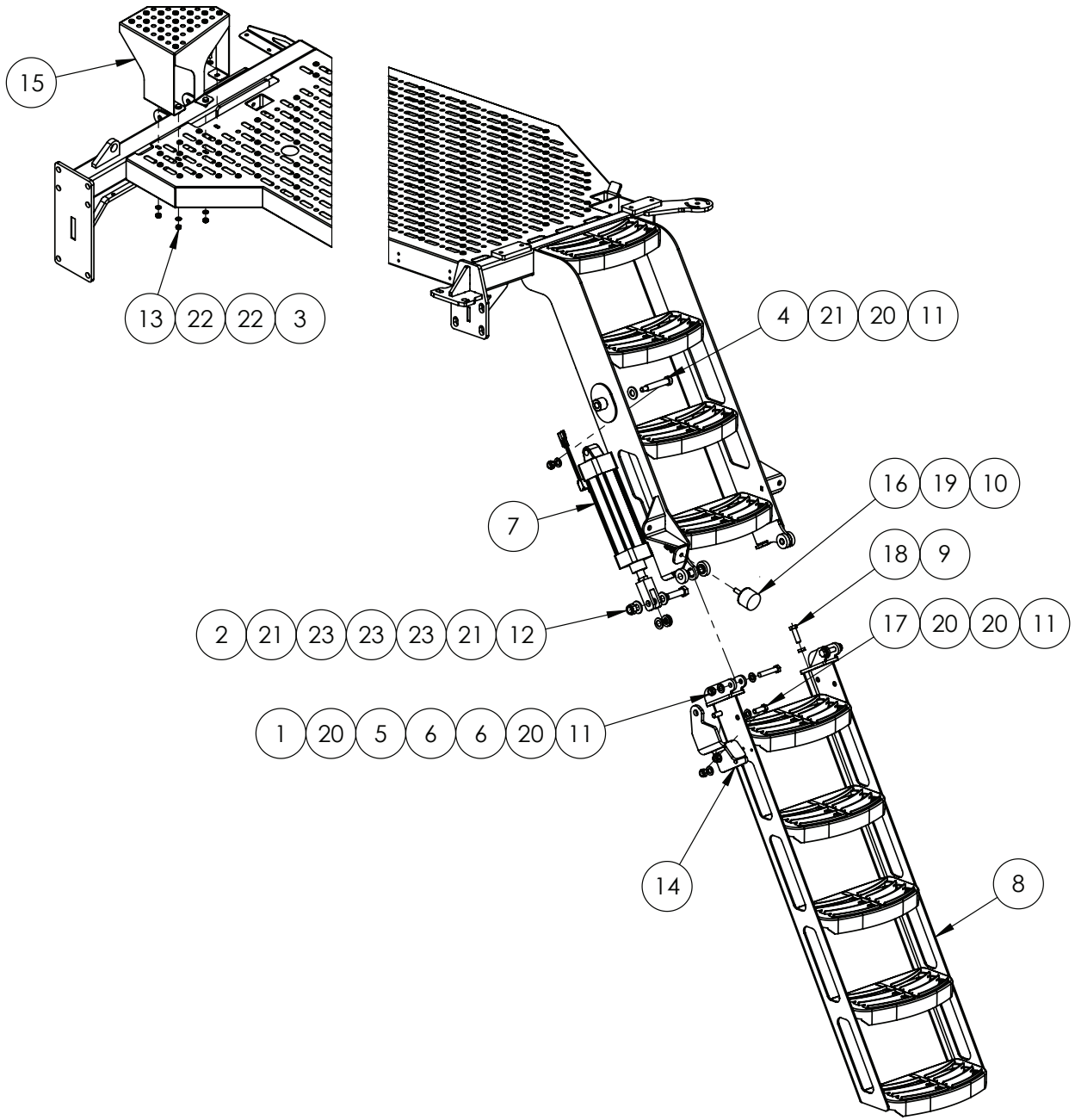

IF DESCRIPTION PREFIX IS ASSEMBLY DRAWING ONLY OR PRODUCTION DRAWING ONLY THE ITEM IS NOT FOR SALE			
ITEM	PART NUMBER	DESCRIPTION	QTY
1	GA5000339	BOLT M12 X 65 GR8.8 ZP	2
2	GA5000941	BOLT M16 X 60 GR8.8 ZP	1
3	GA5004085	BOLT M8 X 20 GR8.8 ZP	4
4	GA5069165	BOLT SHOULDER SHCS M16 X 80 GR12.9 ZP	1
5	GA4553025	BUSH LADDER PIVOT SP MY13	2
6	GA4553030	BUSH NYLON LADDER PIVOT SP MY13	4
7	GA4949445	CYLINDER, PNEUMATIC, LADDER, ASSEMBLY	1
8	GA4603695	LADDER, G4 G6 G8, CABIN ACCESS, MY21	1
9	GA5071280	M12 PLAIN NUT HALF	2
10	GA5000141	NUT M10 NYLOC ZP	1
11	GA5012461	NUT M12 NYLOC ZP	5
12	GA5001029	NUT M16 NYLOC ZP	1
13	GA5004917	NUT M8 NYLOC ZP	4
14	GA4603700	PLATE, LADDER CYLINDER MOUNT, LH FITMENT, MY21	1
15	GA4415550	PLATE, THREAD STEP, BOLT ON, PLATFORM, G4 S2	1
16	GA5052815	RUBBER STOPPER, DIAMETER 50 X 35 LONG, WITH M10 X 35 STUD	1
17	GA5000311	SET SCREW M12 X 35 GR 8.8 ZP	2
18	GA5000319	SET SCREW M12 X 40 GR8.8 ZP	2
19	GA5000117	WASHER 10mm FLAT SS HD	1
20	GA5000577	WASHER 12mm FLAT SS HD	9
21	GA5001043	WASHER 16mm FLAT SS HD	3
22	GA5003651	WASHER 8mm FLAT SS	8
23	GA5069810	WASHER- NYLON 16 ID X 30 OD X 2	3
GA4914345 GOLDACRES		PRODUCTION DRAWING ONLY, PLATFORM, LH CABIN ACCESS, G4, S2	REV 02

Cylinder Assembly, Pneumatic, Ladder

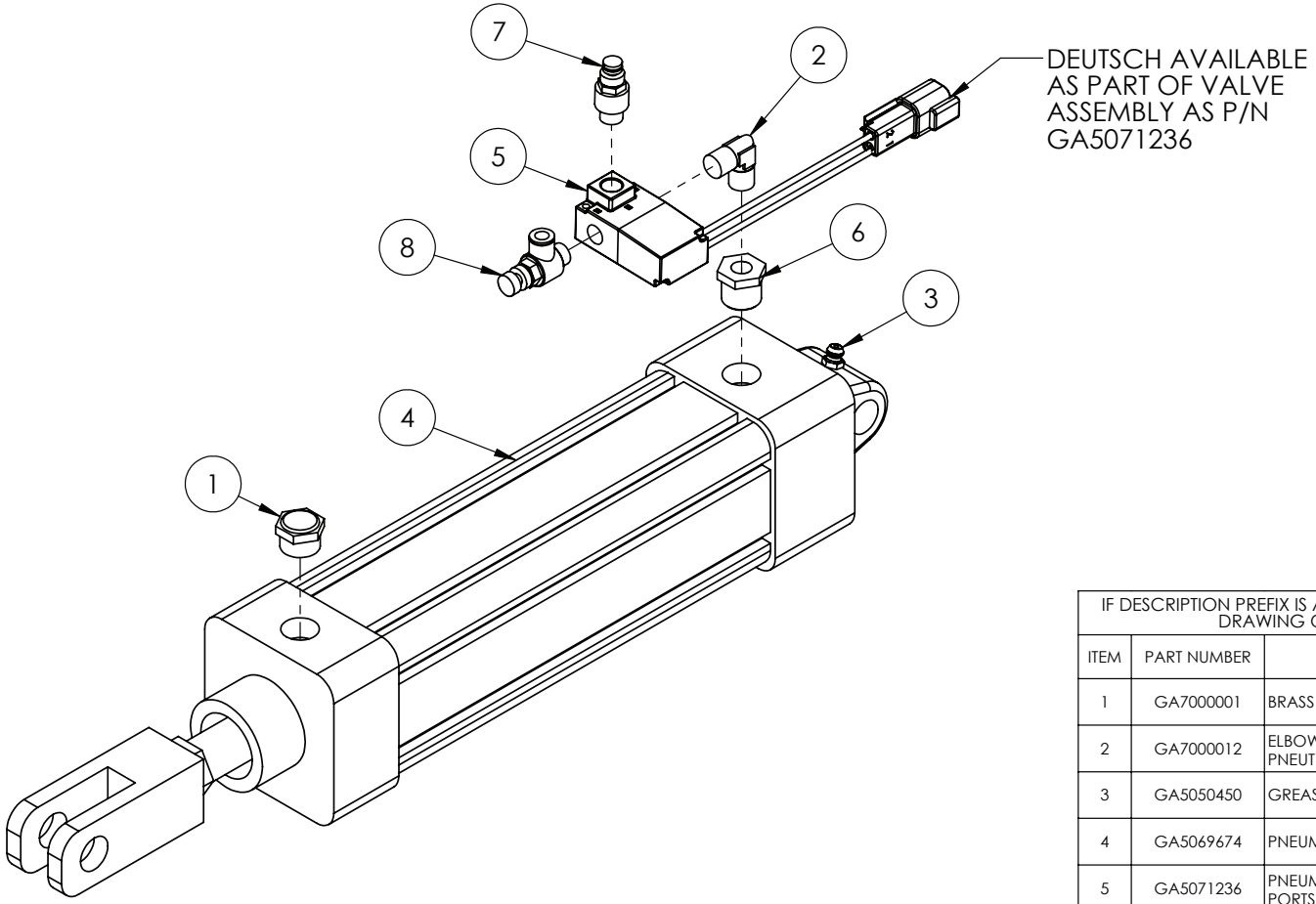

IF DESCRIPTION PREFIX IS ASSEMBLY DRAWING ONLY OR PRODUCTION DRAWING ONLY THE ITEM IS NOT FOR SALE			
ITEM	PART NUMBER	DESCRIPTION	QTY
1	GA7000001	BRASS BREATHER SILENCER 3/8 BSP FLAT	1
2	GA7000012	ELBOW, 1/8" BSP, MALE TO MALE, 0914 00 10, PNEUTECH	1
3	GA5050450	GREASE NIPPLE, 6mm	1
4	GA5069674	PNEUMATIC CYLINDER 63 X 175mm	1
5	GA5071236	PNEUMATIC SOLENOID VALVE MAC 35 SERIES 1/8" PORTS WITH DEUTSCH CONNECTOR	1
6	GA7000011	REDUCING BUSH, 3/8" BSPP – 1/8 BSPP", 0904 10 17, PNEUTECH	1
7	GA7000014	RESTRICTOR, ADJUSTABLE EXHAUST, ET-01, PNEUTECH	1
8	GA7000013	VALVE, FLOW CONTROL 6mm X 1/8 BSP, METER IN, JSC6-01B, PNEUTECH	1
GA4949445 GOLDACRES		CYLINDER, PNEUMATIC, LADDER, ASSEMBLY	REV 01

Access Platform Handrails & Side Mirror Mounting

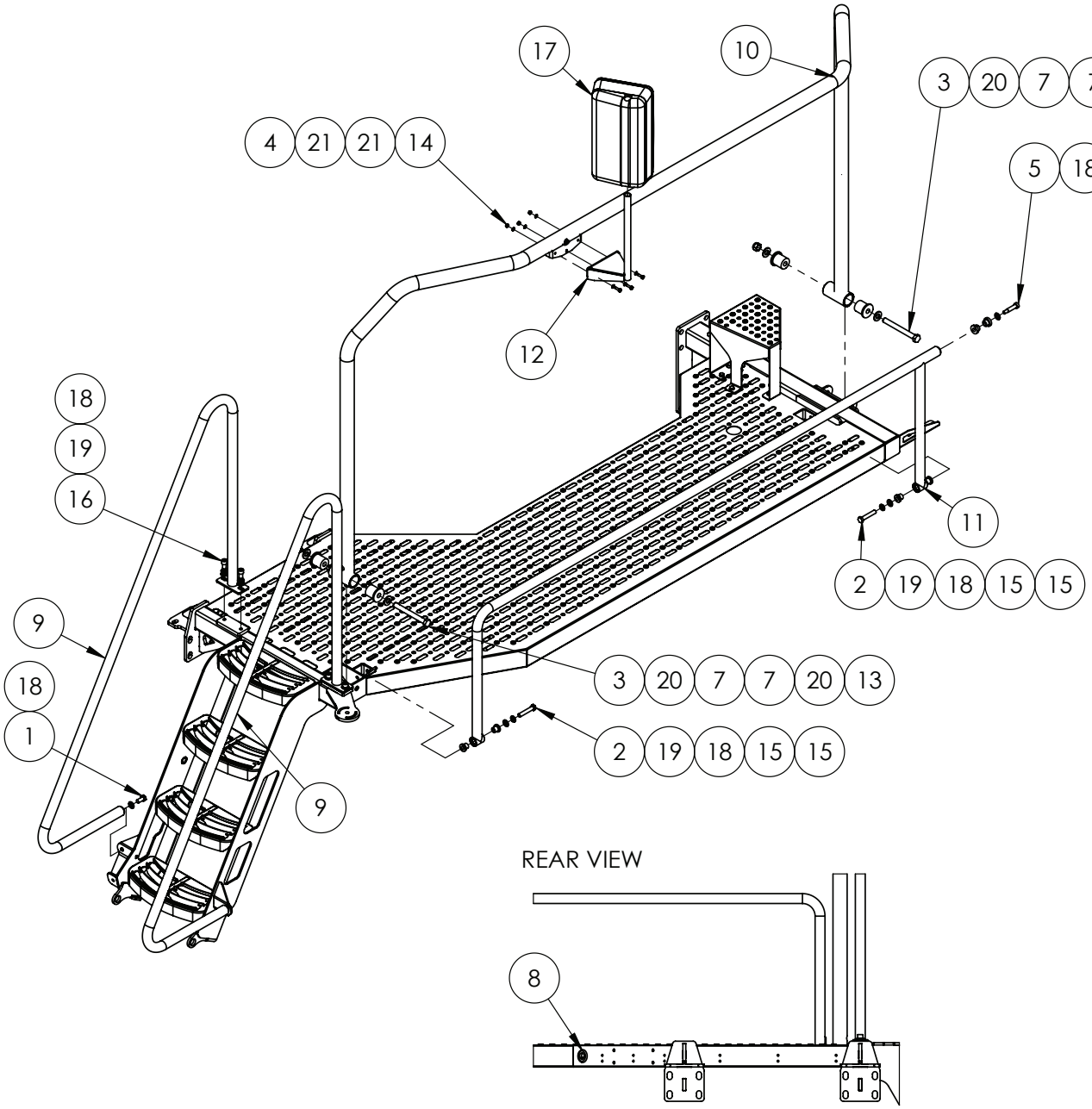

IF DESCRIPTION PREFIX IS ASSEMBLY DRAWING ONLY OR PRODUCTION DRAWING ONLY THE ITEM IS NOT FOR SALE			
ITEM	PART NUMBER	DESCRIPTION	QTY
1	GA5011229	BOLT M12 X 25 GR8.8 ZP	2
2	GA5000339	BOLT M12 X 65 GR8.8 ZP	2
3	GA5000869	BOLT M16 X 150 GR8.8 ZP	2
4	GA5004063	BOLT M6 X 20 SS A-70	3
5	GA5069160	BOLT SHOULDER SHCS M12 X 40 GR12.9 ZP	1
6	GA4551250	BUSH, FOLDING HAND RAIL, WHITE NYLON, G6 MY20	2
7	GA4551255	BUSH, MAIN HAND RAIL CUSHION MOUNT, G6 MY20	4
8	GA5069855	GROMMET, RUBBER, 28 X 1.6 X 35MM, WIRING	1
9	GA4602350	HANDRAIL, LADDER ACCESS, G6 MY20	2
10	GA4604475	HANDRAIL, PLATFORM MAIN, G4, S2	1
11	GA4604480	MIDRAIL, PLATFORM FOLDING RAIL, G4, S2	1
12	GA4658810	MIRROR MOUNT-LH-SP 2011	1
13	GA5001029	NUT M16 NYLOC ZP	2
14	GA5048115	NUT M6 NYLOC ZP	3
15	GA4553055	NYLON BUSH MID HANDRAIL	4
16	GA5050330	SHCS M12 X 20 GR12.9 ZP	4
17	GA5054120	SIDE MIRROR, COMPLETE ASSEMBLY, SUIT CLAAS CAB	1
18	GA5000577	WASHER 12mm FLAT SS HD	9
19	GA5000575	WASHER 12mm SPRING SS	6
20	GA5001043	WASHER 16mm FLAT SS HD	4
21	GA5004437	WASHER 6mm FLAT SS	6
GA4914345 GOLDACRES	PRODUCTION DRAWING ONLY, PLATFORM, LH CABIN ACCESS, G4, S2		REV 02

Boom Rest Assembly, LH

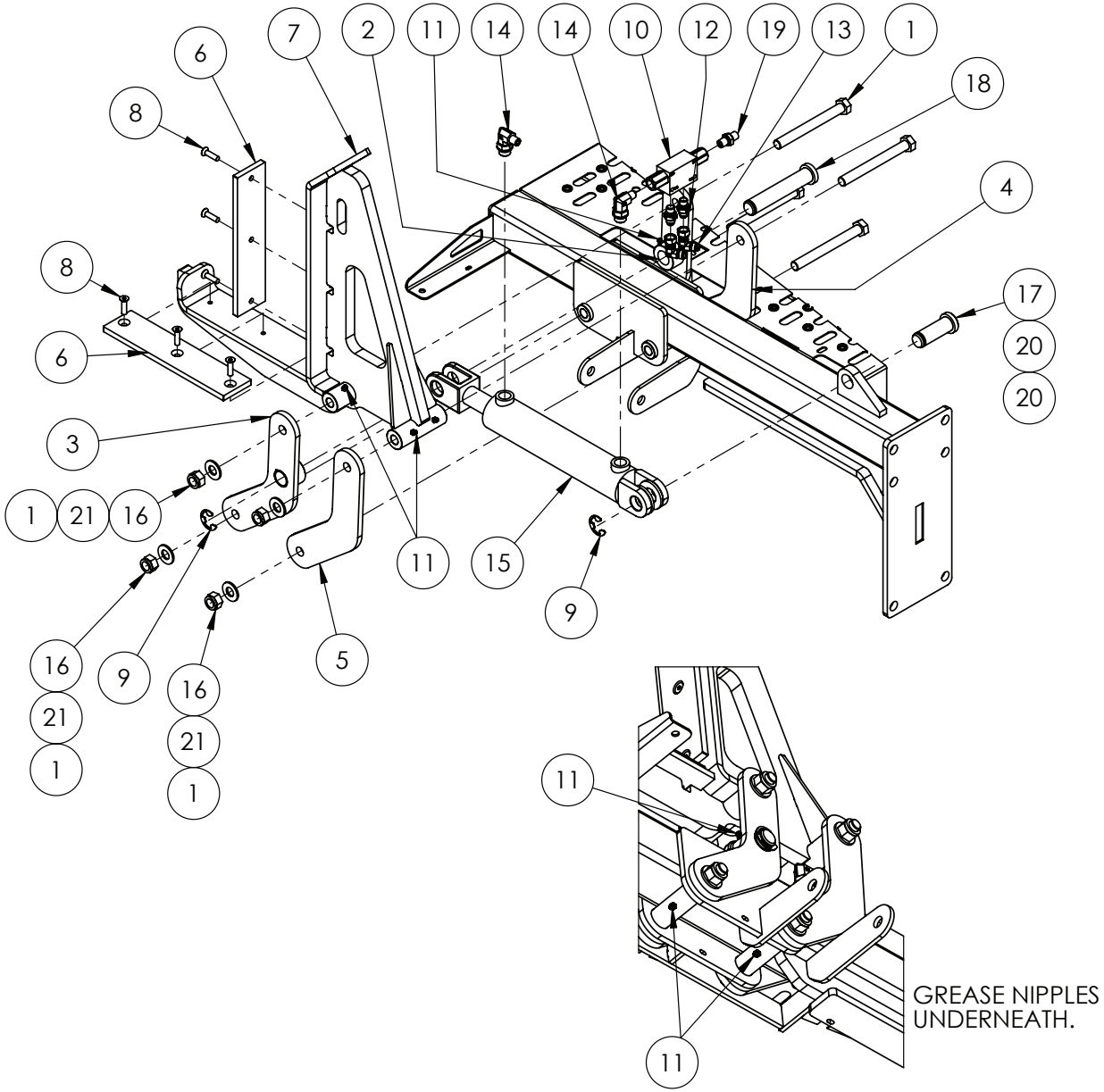

IF DESCRIPTION PREFIX IS ASSEMBLY DRAWING ONLY OR PRODUCTION DRAWING ONLY THE ITEM IS NOT FOR SALE			
ITEM	PART NUMBER	DESCRIPTION	QTY
1	GA5000869	BOLT M16 X 150 GR8.8 ZP	4
2	GA4602370	BOOM REST LINKAGE A, G6 MY20	1
3	GA4602375	BOOM REST LINKAGE B, G6 MY20	1
4	GA4602380	BOOM REST LINKAGE C, G6 MY20	1
5	GA4405690	BOOM REST LINKAGE D, G6 MY20	1
6	GA5073730	BOOM REST WEAR PAD, G6 MY20	2
7	GA4604485	BOOM REST, TRITECH 24-36M, LH, G4, S2	1
8	GA0500014	CSCS M8 X 20, ZP, GR12.9	6
9	GA5001223	CIRCLIP, 19mm, E TYPE, ZINC PLATED	2
10	GA5007957	DOUBLE PILOT CHECK (RA) 12LPM 1/4 BSPP	1
11	GA5050450	GREASE NIPPLE, 6mm	8
12	GA3500544	HYDRAULIC ADAPTOR NIPPLE, 1/4" BSP O-RING X 9/16" JIC, S74-0409	2
13	GA3500002	HYDRAULIC COUPLING, ELBOW, 90 DEGREE, 9/16" MALE JIC, 9/16" FEMALE SWIVEL JIC	2
14	GA3500348	HYDRAULIC ADAPTOR, ELBOW, 90 DEGREE, 1/4" BSPT MALE X 3/4" UN MALE O-RING	2
15	GA5069110	HYDRAULIC CYLINDER 2"X1.25"X6" STROKE	1
16	GA5001029	NUT M16 NYLOC ZP	4
17	L054A	PIN WITH SHOULDER AND CIRCLIP GROOVE, 1" DIAMETER X 71 LONG	1
18	GA4552835	PIN- HYD CYLINDER TO BOOM REST SP 2011	1
19	GA4562025	RESTRICTOR NIPPLE 1/4 BSPT 0.5mm ORIFICE	1
20	GA5017659	WASHER 1 FLAT ZP HD (5mm THICK)	2
21	GA5069810	Washer- Nylon 16 ID x 30 OD x 2	4
GA4914345 GOLDACRES		PRODUCTION DRAWING ONLY, PLATFORM, LH CABIN ACCESS, G4, S2	REV 02

Boom Rest Arm Mounting, RH

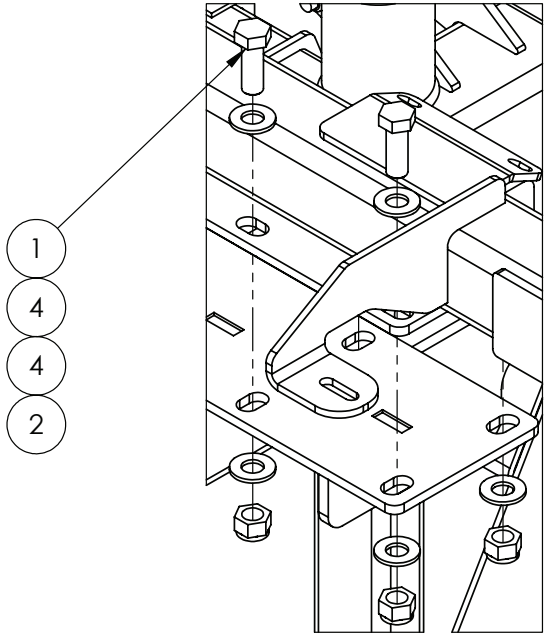

DETAIL A

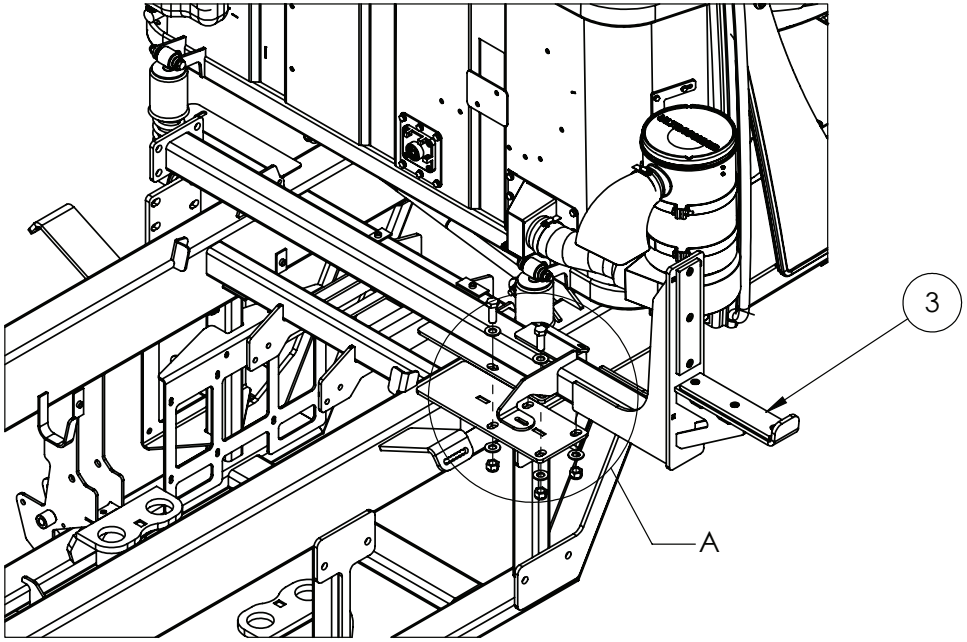

IF DESCRIPTION PREFIX IS ASSEMBLY DRAWING ONLY OR PRODUCTION DRAWING ONLY THE ITEM IS NOT FOR SALE			
ITEM	PART NUMBER	DESCRIPTION	QTY
1	GA5011291	BOLT M16 X 45 GR8.8 ZP	4
2	GA5001029	NUT M16 NYLOC ZP	4
3	GA4914350	PRODUCTION DRAWING ONLY, BOOM REST ASSEMBLY, TRITECH, RH, G4, S2	1
4	GA5001043	WASHER 16mm FLAT SS HD	8
GA7800205 GOLDACRES		ASSEMBLY DRAWING ONLY, RH BOOM REST, CHASSIS MOUNT, G4 S2, MY24	REV 00

Boom Rest Arm Assembly, RH

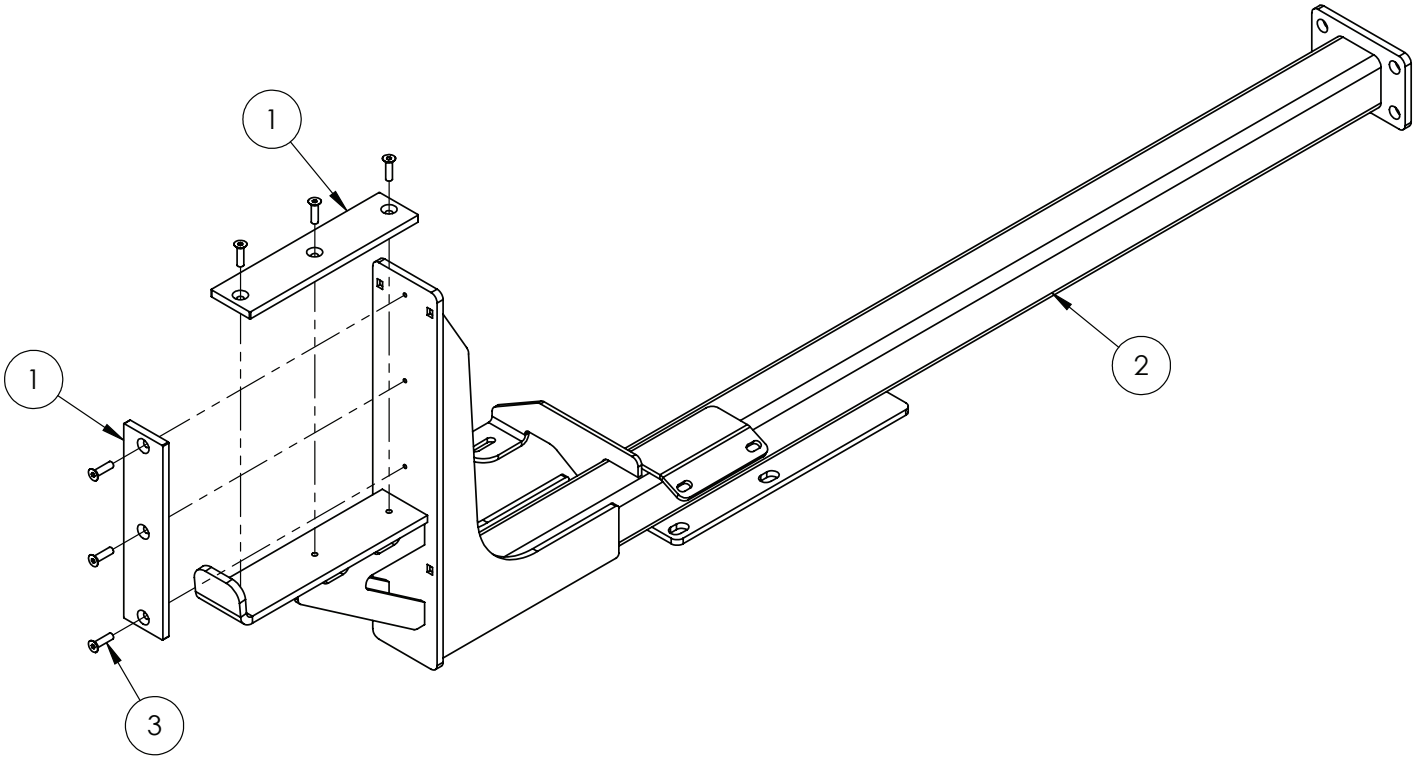

IF DESCRIPTION PREFIX IS ASSEMBLY DRAWING ONLY OR PRODUCTION DRAWING ONLY THE ITEM IS NOT FOR SALE			
ITEM	PART NUMBER	DESCRIPTION	QTY
1	GA5073730	BOOM REST WEAR PAD, G6 MY20	2
2	GA4604505	BOOM REST, TRITECH , RH, G4 ,S2	1
3	GA0500014	CSCS M8 X 20, ZP, GR12.9	6
GA4914350 GOLDACRES		PRODUCTION DRAWING ONLY, BOOM REST ASSEMBLY, TRITECH, RH, G4, S2	REV 00

Hydraulic Oil Cooler & Ramsay Valve Kit Mounting

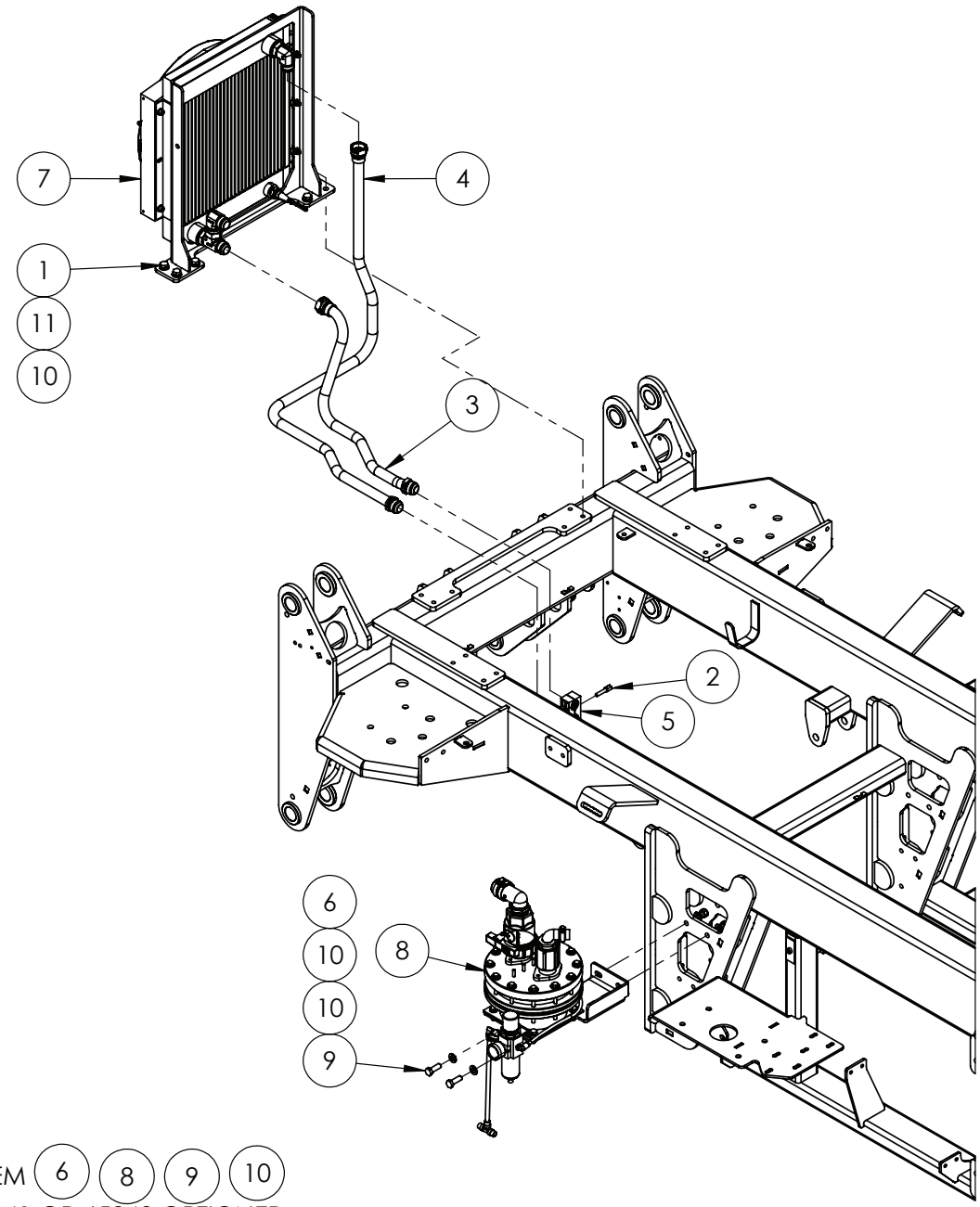

FIT ITEM 6 8 9 10
IF 65241 OR 65242 OPTIONED

IF DESCRIPTION PREFIX IS ASSEMBLY DRAWING ONLY OR PRODUCTION DRAWING ONLY THE ITEM IS NOT FOR SALE			
ITEM	PART NUMBER	DESCRIPTION	QTY
1	GA5011227	BOLT M12 X 20 GR8.8 ZP	6
2	GA5070750	BUILD UP BOLT, STACKING, M8 X 34, WITH WASHER, HYDAC	1
3	GA3501592	HYDRAULIC PIPE, HYDRAULIC OIL COOLER IN, S2 G4	1
4	GA3501591	HYDRAULIC PIPE, HYDRAULIC OIL COOLER OUT, S2 G4	1
5	GA5078038	MOUNTING CLAMP, DOUBLE TYPE, JAW, PAIR, GROUP 4, 28mm, RCD-28J	1
6	GA5012461	NUT M12 NYLOC ZP	2
7	GA4914355	PRODUCTION DRAWING ONLY, COOLER, HYDRAULIC OIL, G4, S2	1
8	GA4914405	PRODUCTION DRAWING ONLY, RAMSAY VALVE AND REGULATOR KIT, G4 S2	1
9	GA5000311	SET SCREW M12 X 35 GR 8.8 ZP	2
10	GA5000577	WASHER 12mm FLAT SS HD	10
11	GA5000575	WASHER 12mm SPRING SS	6
GA7800170 GOLDACRES		ASSEMBLY DRAWING ONLY, HYDRAULIC OIL COOLER & RAMSAY VALVE FITMENT G4 S2 MY24	REV 00

Hydraulic Oil Cooler, Frame Mounting

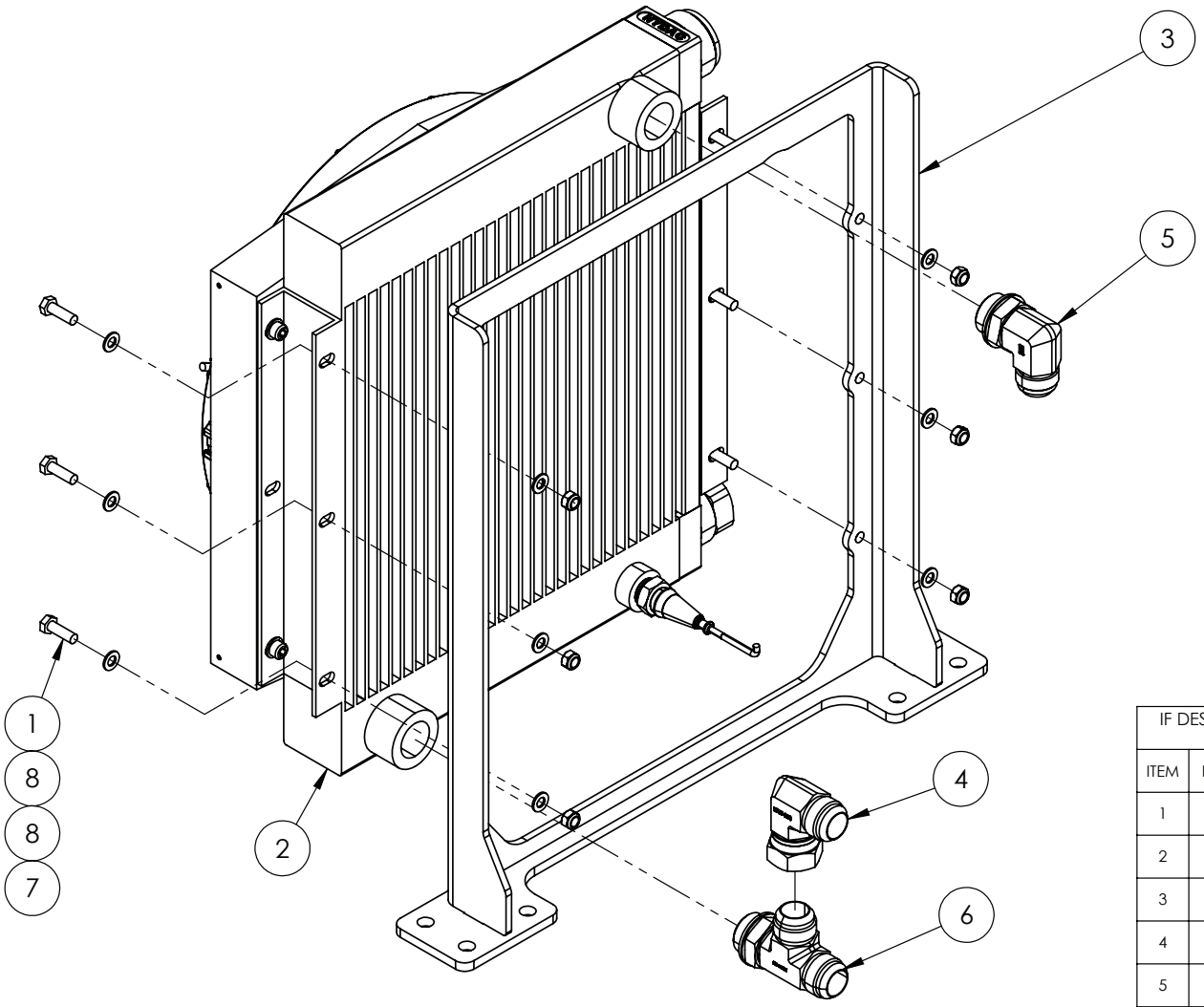

IF DESCRIPTION PREFIX IS ASSEMBLY DRAWING ONLY OR PRODUCTION DRAWING ONLY THE ITEM IS NOT FOR SALE			
ITEM	PART NUMBER	DESCRIPTION	QTY
1	GA5004713	BOLT M8 X 25 SS A2-70	6
2	GA3500708	COOLER COMPLETE, HYDRAULIC OIL, THERMAL BYPASS, 12V THERMOFAN, OK-ELD4H, HYDAC	1
3	GA4604445	FABRICATED SUBASSEMBLY, OIL COOLER MOUNT, G4, S2	1
4	GA3500592	HYDRAULIC ADAPTOR ELBOW, 1 5/16" JIC MALE X 1 5/16" JIC FEMALE SWIVEL, S15-2121	1
5	GA3500732	HYDRAULIC ADAPTOR ELBOW, 1" BSPP TO 1 5/16" JIC	1
6	GA3501310	HYDRAULIC ADAPTOR, TEE, 1" BSPP O-RING MALE, 1-5/16" JIC MALE, 1-5/16" JIC MALE, S78-162121	1
7	GA5052590	NUT M8 NYLOC SS	6
8	GA5003651	WASHER 8mm FLAT SS	12
GA4914355 GOLDACRES		PRODUCTION DRAWING ONLY, COOLER, HYDRAULIC OIL, G4, S2	REV 00

Ramsay Valve with Regulator Kit Assembly

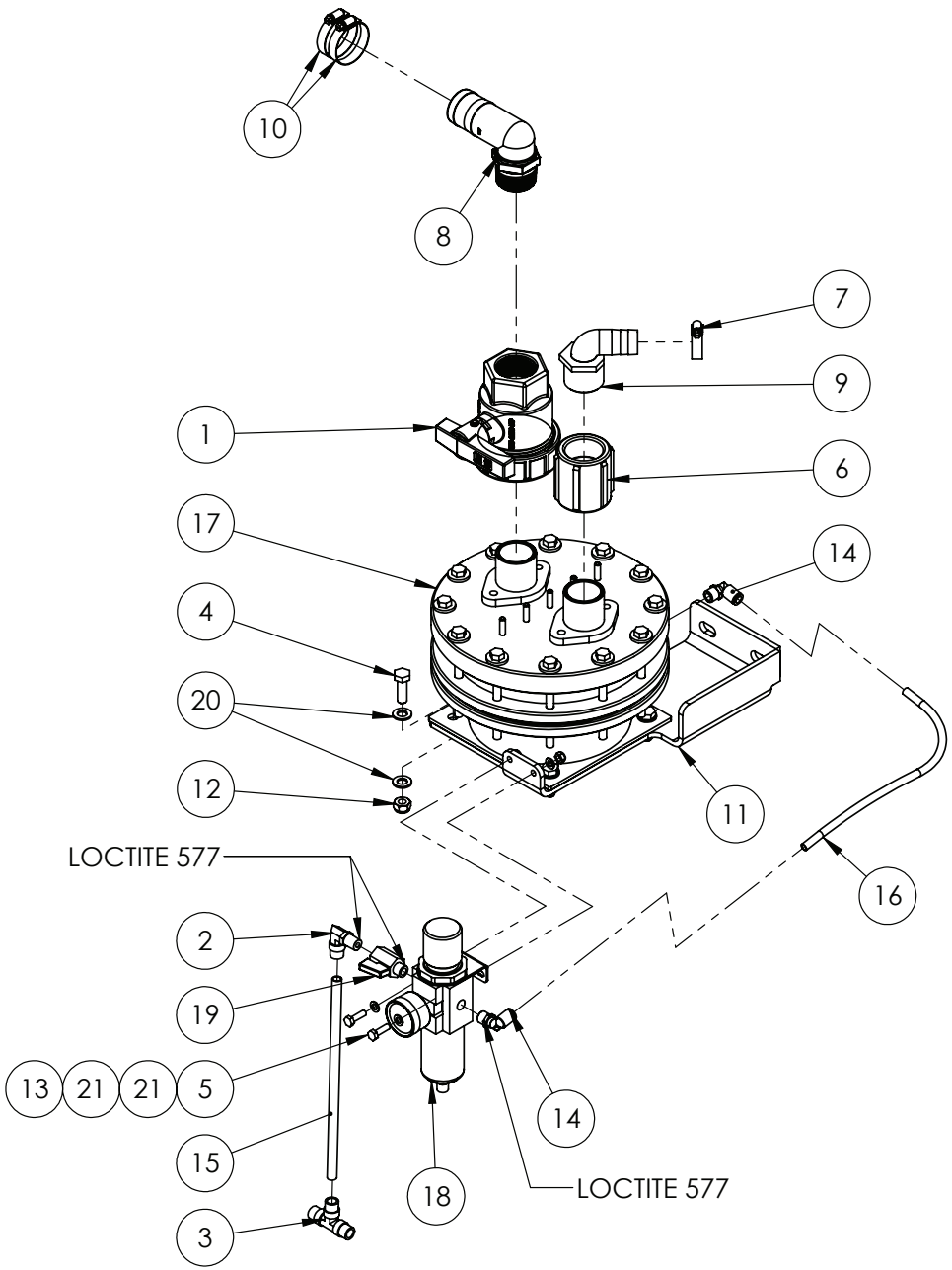

IF DESCRIPTION PREFIX IS ASSEMBLY DRAWING ONLY OR PRODUCTION DRAWING ONLY THE ITEM IS NOT FOR SALE			
ITEM	PART NUMBER	DESCRIPTION	QTY
1	GA5078166	1-1/4FPT,1-1/2PORT UNION VLV, UV125FP	1
2	GA5078518	AIR FITTING, ELBOW, SWIVEL, 3/8" TUBE, 1/4" NPT MALE, PUSH IN, BRASS, ALKON - AQ69-DOTS-6X4	1
3	GA5078516	AIR FITTING, TEE, 3/8" TUBE, PUSH IN, BRASS, ALKON - AQ64-DOT-6	1
4	GA5065455	BOLT M10 X 30 GR8.8 ZP	4
5	GA5004065	BOLT M6 X 20 GR8.8 ZP	2
6	GA5077639	COUPLING, SOCKET, 1 1/4 FEMALE THREAD, BANJO, CPLG125	1
7	GA5001681	HOSE CLAMP, 1" SS (20-32/12W)	1
8	GA5077726	HOSE BARB, ELBOW, 90 DEGREE, 1 1/4 MALE THREAD X 1 1/2 HOSE, BANJO, HB125/150-90	1
9	GA5077725	HOSE BARB, ELBOW, 90 DEGREE, 1 1/4" MALE THREAD X 1" HOSE, BANJO	1
10	GA5002873	HOSE CLAMP, 1 1/2" SS (32-50/12W)	2
11	GA4415735	MOUNTING BRACKET, RAMSAY VALVE, CHASSIS, G4 S2	1
12	GA5000141	NUT M10 NYLOC ZP	4
13	GA5048115	NUT M6 NYLOC ZP	2
14	GA5052690	PNEUMATIC FITTING, ELBOW, 90 DEGREE, 1/4 BSP MALE X 8mm PUSH TYPE, METAL	2
15	GA7000016	PNEUMATIC HOSE, 3/8" NYLON, CUT 2500mm	1
16	GA5004382	PNEUMATIC HOSE, 8mm NYLON, CUT 350mm	1
17	GA5010315	RAMSAY VALVE	1
18	GA5013825	REGULATOR 1/4 AIR (RAMSAY VALVE MANUAL PRESSURE REGULATOR)	1
19	GA5018323	VALVE, BALL, 1/4 MALE, FEMALE, BLACK LEVER HANDLE, CHROMED	1
20	GA5000117	WASHER 10mm FLAT SS HD	8
21	GA5004437	WASHER 6mm FLAT SS	4
GA4914405 GOLDACRES		PRODUCTION DRAWING ONLY, RAMSAY VALVE AND REGULATOR KIT, G4 S2	REV 00

Hydraulic Manifold, Chassis Control, Mounting

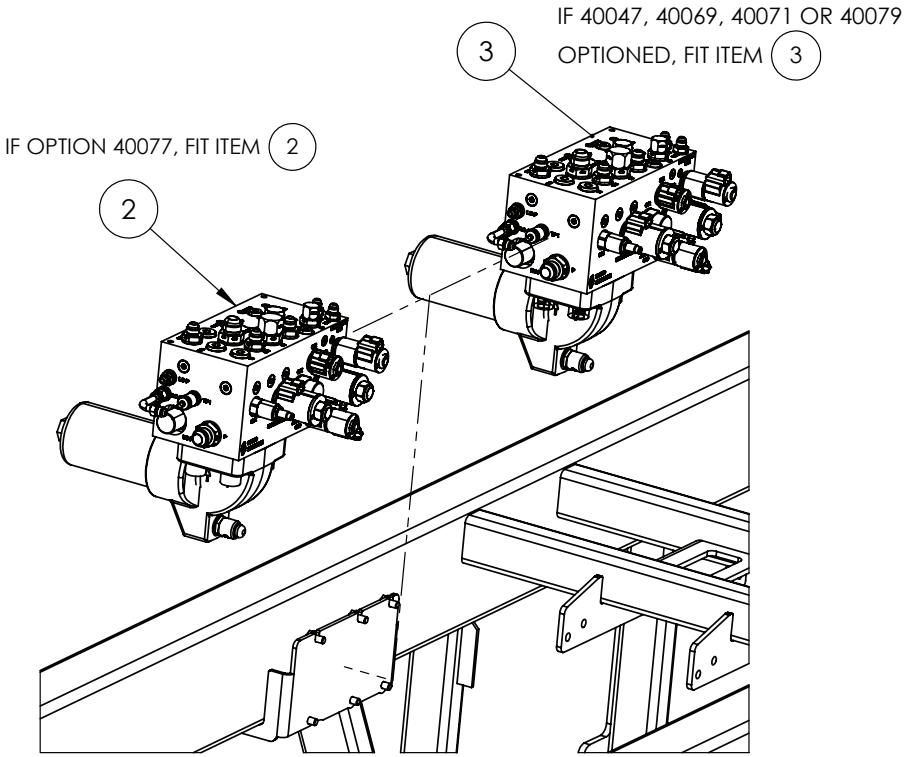

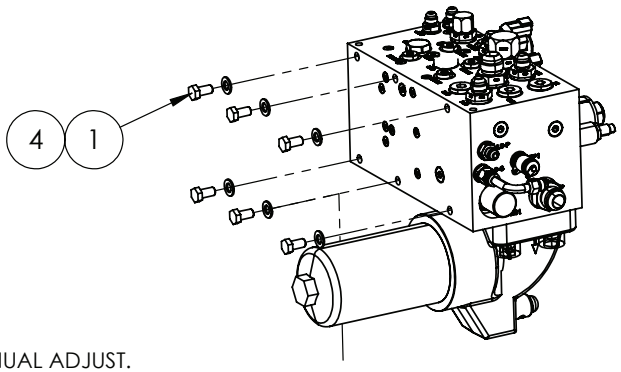

BUILD OPTIONS:
40047 - ADJUSTABLE WHEEL TRACK 3000-4000mm MANUAL ADJUST.
40069 - WHEEL TRACK 3000mm FIXED.
40071 - WHEEL TRACK 2000mm FIXED.
40077 - HYDRAULIC ADJUST WHEEL TRACK 2000-3000mm 2WD (BASED ON 380 WIDE TYRES ONLY).
40079 - FOUR WHEEL DRIVE (4WD) WITH FIXED WHEEL TRACK SET TO 2970mm.

IF DESCRIPTION PREFIX IS ASSEMBLY DRAWING ONLY OR PRODUCTION DRAWING ONLY THE ITEM IS NOT FOR SALE			
ITEM	PART NUMBER	DESCRIPTION	QTY
1	GA5006113	BOLT M10 X 20 GR8.8 ZP	6
2	GA6101770	HYDRAULIC MANIFOLD ASSEMBLY, CHASSIS CONTROL, WITH PRESSURE FILTER, ADJUSTABLE AXLE, G4 MY24	1
3	GA6101780	HYDRAULIC MANIFOLD ASSEMBLY, CHASSIS CONTROL, WITH PRESSURE FILTER, FIXED AXLE, G4 MY24	1
4	GA5000117	WASHER 10mm FLAT SS HD	6
GA7800181 GOLDACRES		ASSEMBLY DRAWING ONLY, HYDRAULLIC MANIFOLD, CHASSIS MOUNT, G4 S2, MY24	REV 00

Hydraulic Manifold Assembly, Chassis Control, Fixed Axle

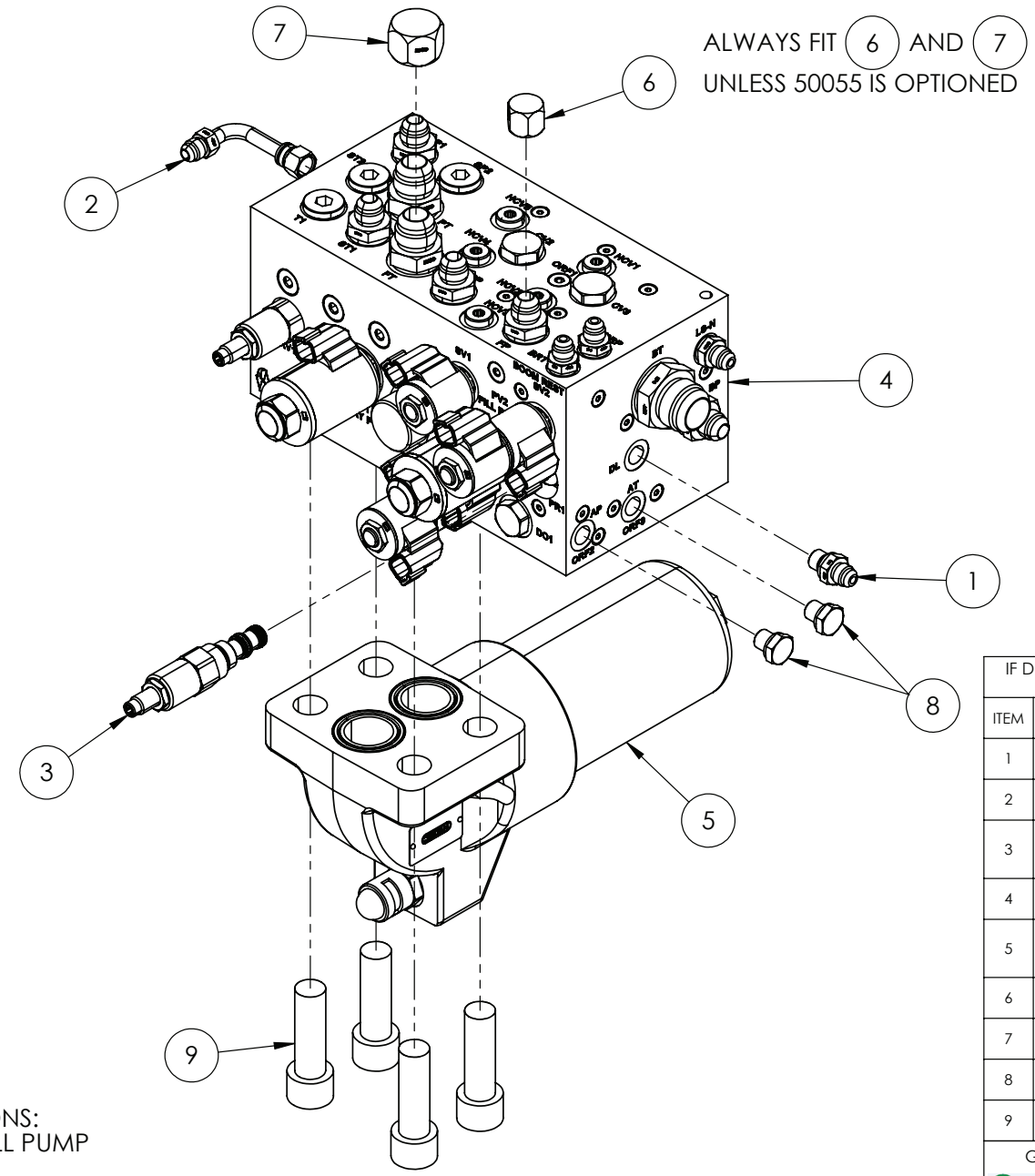

ALWAYS FIT (6) AND (7)
UNLESS 50055 IS OPTIONED

BUILD OPTIONS:
50055 - 3" FILL PUMP

IF DESCRIPTION PREFIX IS ASSEMBLY DRAWING ONLY OR PRODUCTION DRAWING ONLY THE ITEM IS NOT FOR SALE			
ITEM	PART NUMBER	DESCRIPTION	QTY
1	GA3500544	HYDRAULIC ADAPTOR NIPPLE, 1/4" BSP O-RING X 9/16" JIC, S74-0409	1
2	GA3501299	HYDRAULIC ADAPTOR, TUBE BEND, 90 DEG, 9/16" JIC MALE TO 9/16" JIC FEMALE SWIVEL, S103-0909	1
3	GA3500869	HYDRAULIC CARTRIDGE, PRESSURE REDUCING VALVE, HYDRAFORCE, PRE-SET 35 BAR, PR08-32A-0-N-12/M35	1
4	GA3501206	HYDRAULIC MANIFOLD ASSEMBLY, CHASSIS CONTROL, G4 S2, MY24	1
5	GA3501207	HYDRAULIC PRESSURE FILTER ASSEMBLY, 10 MICRON, 4 BOLT FLANGE MOUNT, 6 BAR BYPASS, MANUAL CLOGGING INDICATOR, DF240, HYDAC	1
6	GA3500794	HYDRAULIC ADAPTOR, CAP, 3/4" JIC FEMALE, S65-12	1
7	GA3500795	HYDRAULIC ADAPTOR, PLUG, 1 1/16" JIC FEMALE, S65-17	1
8	GA3500299	HYDRAULIC ADAPTOR, PLUG, 1/4" BSPP MALE, 6119171	2
9	GA0500029	SHCS, M20 X 65, ZP GR12.9	4
GA6101780 GOLDACRES		HYDRAULIC MANIFOLD ASSEMBLY, CHASSIS CONTROL, WITH PRESSURE FILTER, FIXED AXLE, G4 MY24	REV 00

Hydraulic Manifold Assembly, Chassis Control, Adjustable Axle

ALWAYS FIT (5) AND (6)
UNLESS 50055 IS OPTIONED

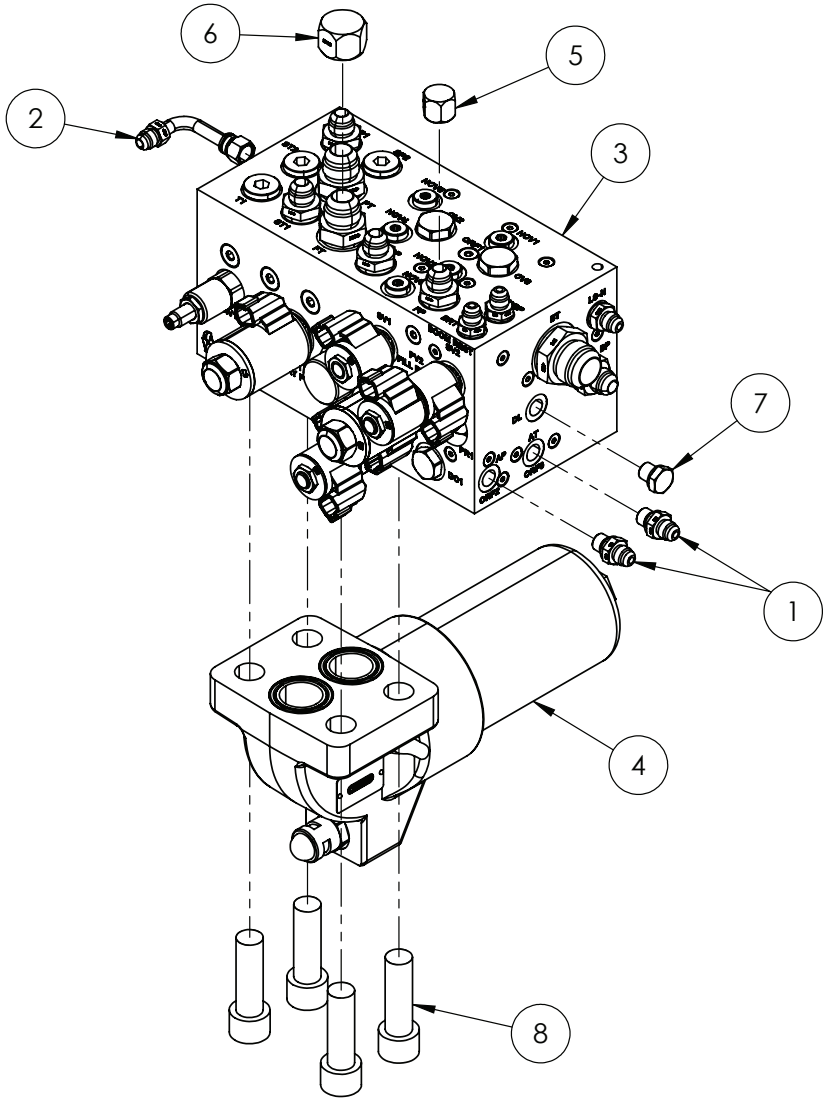

IF DESCRIPTION PREFIX IS ASSEMBLY DRAWING ONLY OR PRODUCTION DRAWING ONLY THE ITEM IS NOT FOR SALE			
ITEM	PART NUMBER	DESCRIPTION	QTY
1	GA3500544	HYDRAULIC ADAPTOR NIPPLE, 1/4" BSP O-RING X 9/16" JIC, S74-0409	2
2	GA3501299	HYDRAULIC ADAPTOR, TUBE BEND, 90 DEG, 9/16" JIC MALE TO 9/16" JIC FEMALE SWIVEL, S103-0909	1
3	GA3501206	HYDRAULIC MANIFOLD ASSEMBLY, CHASSIS CONTROL, G4 S2, MY24	1
4	GA3501207	HYDRAULIC PRESSURE FILTER ASSEMBLY, 10 MICRON, 4 BOLT FLANGE MOUNT, 6 BAR BYPASS, MANUAL CLOGGING INDICATOR, DF240, HYDAC	1
5	GA3500794	HYDRAULIC ADAPTOR, CAP, 3/4" JIC FEMALE, S65-12	1
6	GA3500795	HYDRAULIC ADAPTOR, PLUG, 1 1/16" JIC FEMALE, S65-17	1
7	GA3500299	HYDRAULIC ADAPTOR, PLUG, 1/4" BSPP MALE, 6119171	1
8	GA0500029	SHCS, M20 X 65, ZP GR12.9	4
GA6101770 GOLDACRES		HYDRAULIC MANIFOLD ASSEMBLY, CHASSIS CONTROL, WITH PRESSURE FILTER, ADJUSTABLE AXLE, G4 MY24	REV 00

BUILD OPTIONS:
50055 - 3" FILL PUMP

Brake Line, Chassis Mounting

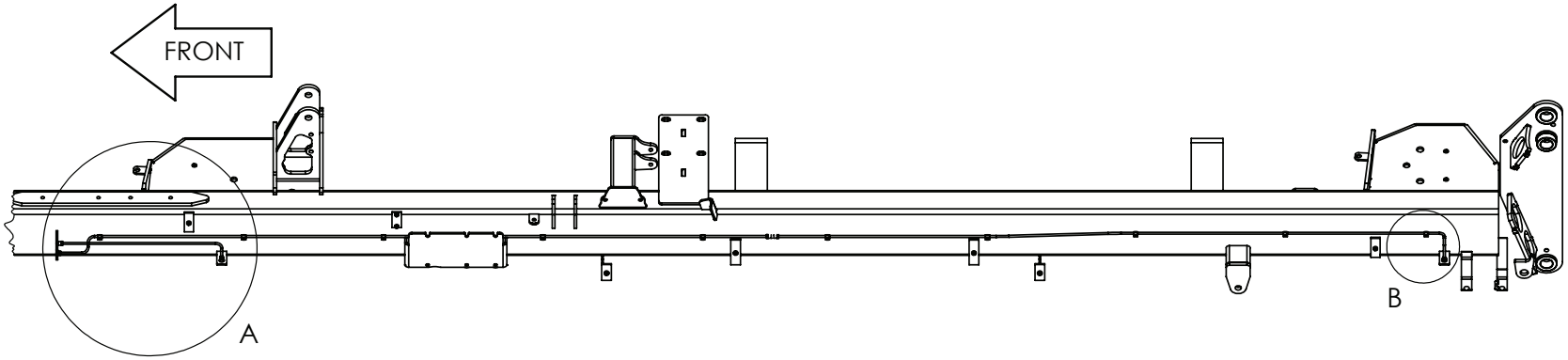

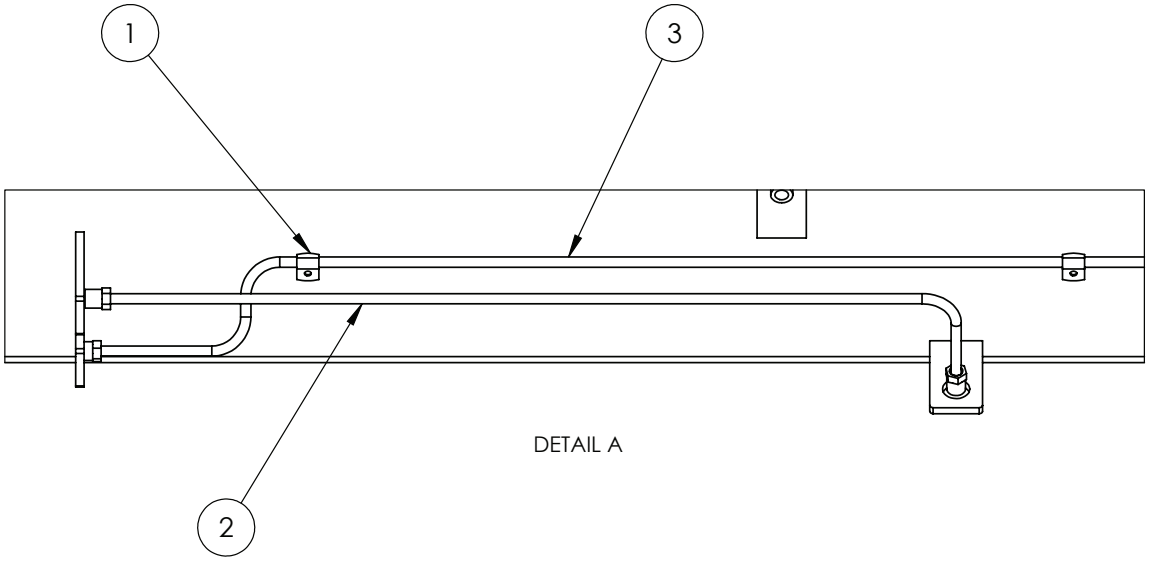

DETAIL A

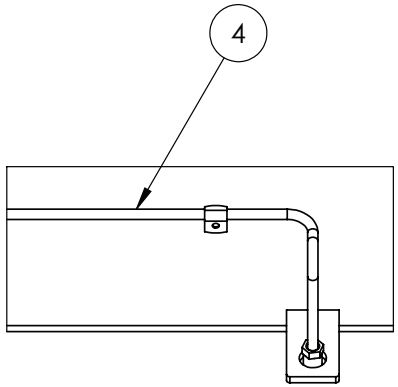

DETAIL B

IF DESCRIPTION PREFIX IS ASSEMBLY DRAWING ONLY OR PRODUCTION DRAWING ONLY THE ITEM IS NOT FOR SALE			
ITEM	PART NUMBER	DESCRIPTION	QTY
1	GA5007205	CLIP FOR BRAKE LINE 3/16	10
2	GA4914400	PRODUCTION DRAWING ONLY, BRAKE LINE, CHASSIS, FRONT AXLE, G4, S2	1
3	GA4914390	PRODUCTION DRAWING ONLY, BRAKE LINE, CHASSIS, REAR AXLE 1, G4, S2	1
4	GA4914395	PRODUCTION DRAWING ONLY, BRAKE LINE, CHASSIS, REAR AXLE 2, G4, S2	1
GA7800183 GOLDACRES		ASSEMBLY DRAWING ONLY, BRAKE LINES, CHASSIS MOUNT, G4 S2, MY24	REV 00

Bonnet Mounting, Bonnet Strap & LED Bar Light

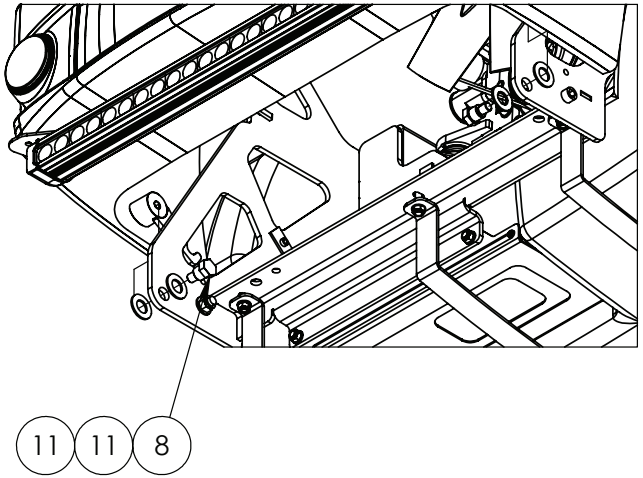

IF OPTION 90039 SELECTED FIT ITEM 4

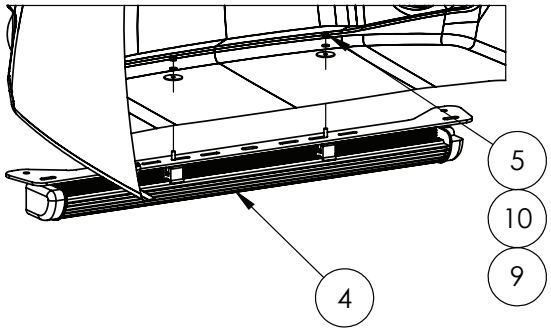

REPLACEMENT PARTS			
ITEM	PART NUMBER	DESCRIPTION	QTY
A	GA3000082	GLOBE, HB3, 12V, 60W, NARVA, LOW BEAM, STANDARD	-
	GA3000492	HEADLIGHT, HB3, LED, PACK OF 2, 9-32 VOLT, COOL WHITE, 5000LM, LOW BEAM LED	-
B	GA3000082	GLOBE, HB3, 12V, 60W, NARVA, HIGH BEAM, STANDARD	-
	GA3000492	HEADLIGHT, HB3, LED, PACK OF 2, 9-32 VOLT, COOL WHITE, 5000LM, HIGH BEAM, LED	-

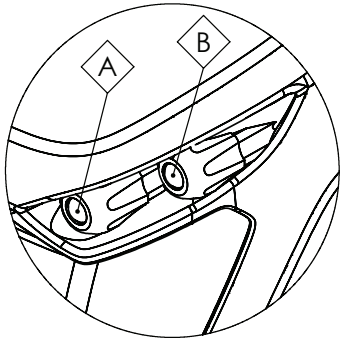

DETAIL A

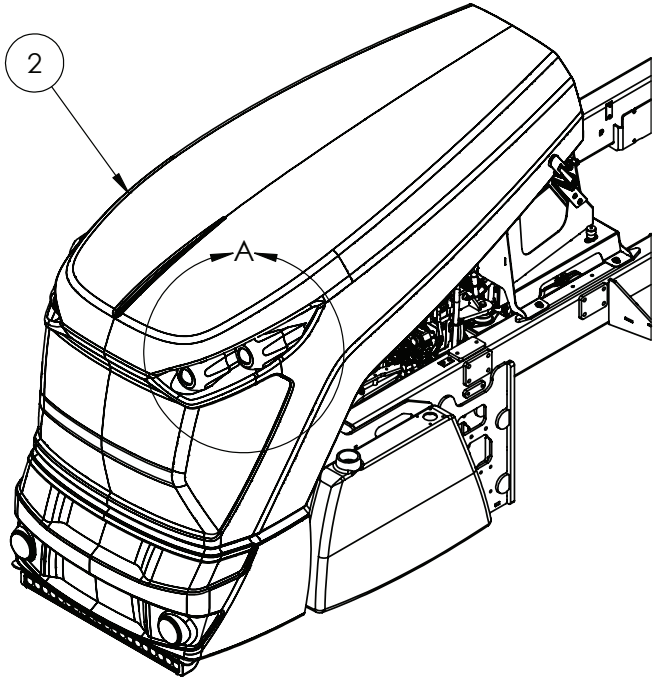

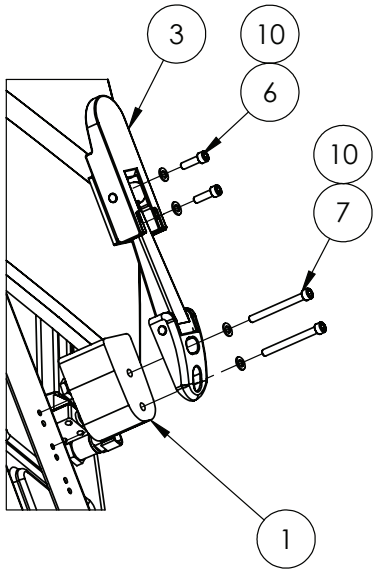

IF DESCRIPTION PREFIX IS ASSEMBLY DRAWING ONLY OR PRODUCTION DRAWING ONLY THE ITEM IS NOT FOR SALE			
ITEM	PART NUMBER	DESCRIPTION	QTY
1	GA4502630	BONNET LATCH SPACER BLOCK	2
2	GA5072135	BONNET, CROP CRUISER, 2015	1
3	GA5066595	CROP CRUISER BONNET LATCH - SOUTHCO	2
4	GA5075510	LIGHT, LED, BAR, SPOT & FLOOD BEAM, 180W	1
5	GA5048115	NUT M6 NYLOC ZP	2
6	GA5004055	SHCS M6 X 20 GR12.9 ZP	4
7	GA5070460	SHCS M6 X 60 SS A2-70	4
8	GA4552765	SHOULDER BOLT-SUIT BONNET 2011 SP	2
9	GA5017645	WASHER 1/4 ID X 1 1/4 OD X 16G SS	2
10	GA5004437	WASHER 6mm FLAT SS	10
11	GA0500078	WASHER, 1" ID X 1 7/8" OD X 1/8" THICK, NYLON	4
GA7800217 GOLDACRES		ASSEMBLY DRAWING ONLY, BONNET, CHASSIS MOUNT, G4 S2, MY24	REV 00

Bonnet Stop Hardware & Remote Drain Adaptors

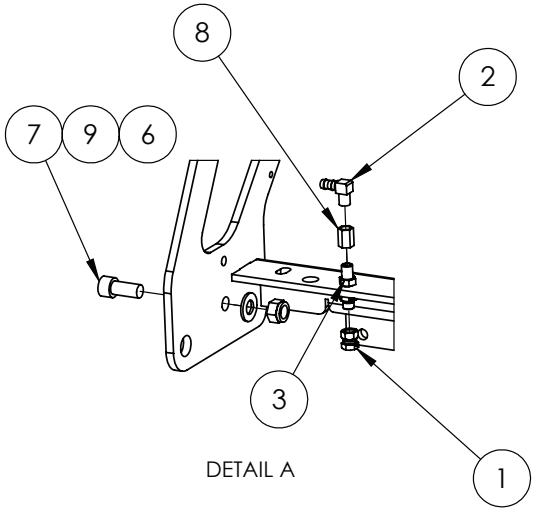

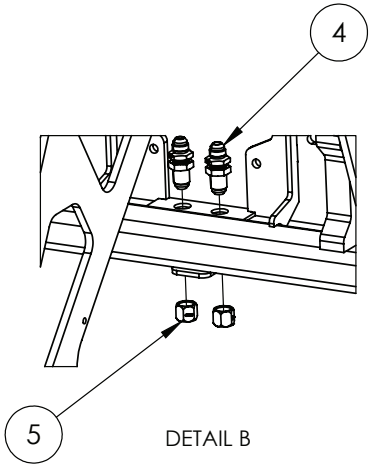

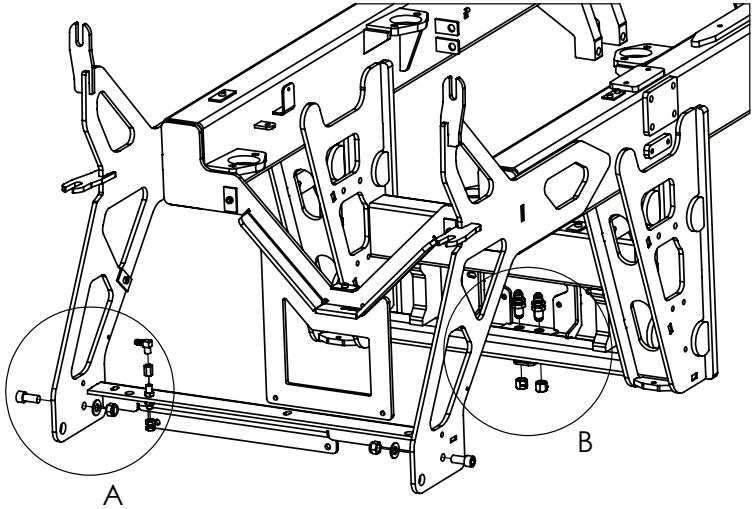

IF DESCRIPTION PREFIX IS ASSEMBLY DRAWING ONLY OR PRODUCTION DRAWING ONLY THE ITEM IS NOT FOR SALE			
ITEM	PART NUMBER	DESCRIPTION	QTY
1	GA3500277	CAP, SWIVEL, 1/4" BSPP FEMALE	1
2	GA5049290	ELBOW 1/4" MALE THREAD X 3/8" BARB BRASS	1
3	GA3500249	HYDRAULIC ADAPTOR, BULKHEAD NIPPLE, 1/4" BSPP MALE X 1/4" BSPP MALE	1
4	GA3500803	HYDRAULIC ADAPTOR, BULKHEAD NIPPLE, 3/4" JIC MALE X 3/4" JIC MALE, S10-1212	2
5	GA3500794	HYDRAULIC ADAPTOR, CAP, 3/4" JIC FEMALE, S65-12	2
6	GA5001029	NUT M16 NYLOC ZP	2
7	GA5000923	SHCS M16 X 35 GR12.9 ZP	2
8	GA5066940	SOCKET, 1/4 FEMALE THREAD, HEX, BRASS	1
9	GA5001043	WASHER 16mm FLAT SS HD	2
GA7800184 GOLDACRES		ASSEMBLY DRAWING ONLY, BONNET STOP, REMOTE DRAIN, CHASSIS MOUNT, G4 S2, MY24	REV 00

Bilberry, Front Camera Mount to Chassis

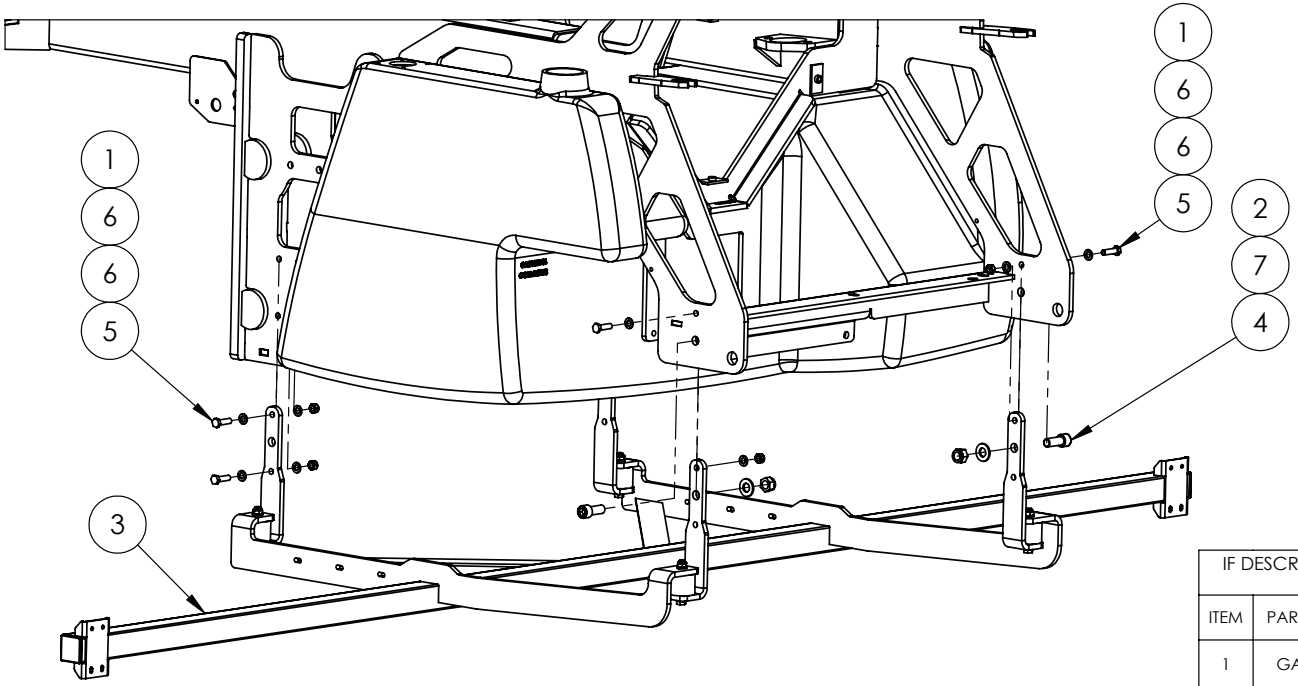

IF DESCRIPTION PREFIX IS ASSEMBLY DRAWING ONLY OR PRODUCTION DRAWING ONLY THE ITEM IS NOT FOR SALE			
ITEM	PART NUMBER	DESCRIPTION	QTY
1	GA5000141	NUT M10 NYLOC ZP	6
2	GA5001029	NUT M16 NYLOC ZP	2
3	GA4953180	PRODUCTION DRAWING ONLY, MOUNTING FRAME, FRONT CAMERA, BILBERRY, G4 S2	1
4	GA5000925	SHCS M16 X 40 GR12.9 ZP	2
5	GA5006111	SET SCREW M10 X 35 GR8.8 ZP	6
6	GA5000117	WASHER 10mm FLAT SS HD	12
7	GA5001043	WASHER 16mm FLAT SS HD	2
GA7800386 GOLDACRES		FRONT CAMERA MOUNT TO CHASSIS, BILBERRY, G4 S2	REV 00.A

Cabin Suspension, Reverse Beeper & Raven XRT ABM Chassis Mounting

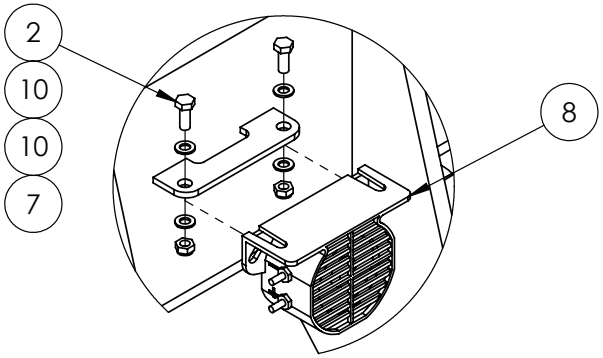

DETAIL A

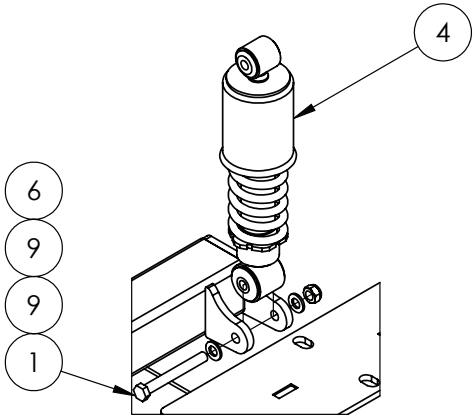

DETAIL B

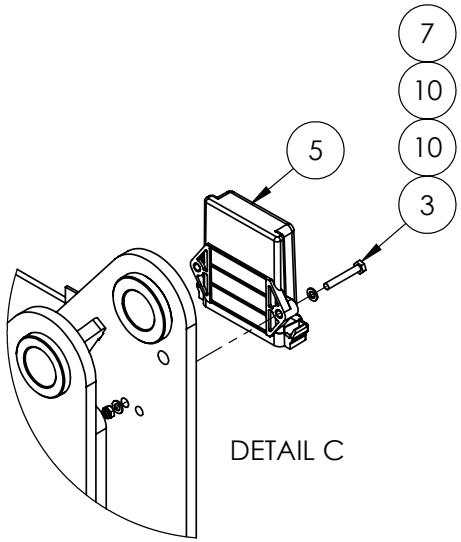

DETAIL C

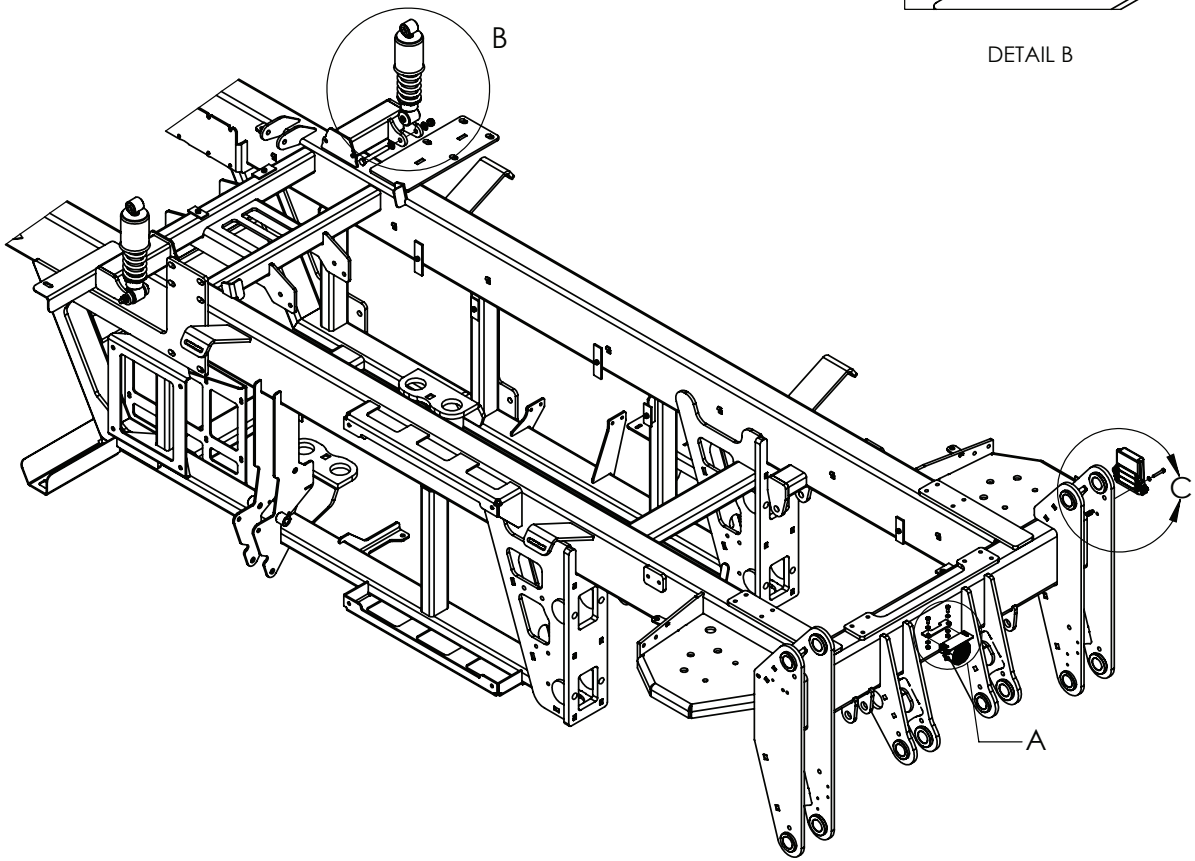

IF DESCRIPTION PREFIX IS ASSEMBLY DRAWING ONLY OR PRODUCTION DRAWING ONLY THE ITEM IS NOT FOR SALE			
ITEM	PART NUMBER	DESCRIPTION	QTY
1	GA5000259	BOLT M12 X 100 GR8.8 ZP	2
2	GA5004041	BOLT M6 X 16 GR8.8 ZP	2
3	GA5004081	BOLT M6 X 40 GR8.8 ZP	2
4	GA5054105	DAMPER, SHOCK ABSORBER	2
5	GA3000370	ECU, RAVEN XRT, AUTOBOOM, ABM, WITH AUTOBOOM UNLOCK 063-0174-090	1
6	GA5012461	NUT M12 NYLOC ZP	2
7	GA5048115	NUT M6 NYLOC ZP	4
8	GA5011985	REVERSE BEEPER	1
9	GA5000577	WASHER 12mm FLAT SS HD	4
10	GA5004437	WASHER 6mm FLAT SS	8
GA7800185 GOLDACRES		ASSEMBLY DRAWING ONLY, REVERSE BEEPER, CAB SHOCKS, CHASSIS MOUNT, G4 S2, MY24	REV 00

Brake Control Valve & Air Tank Mounting

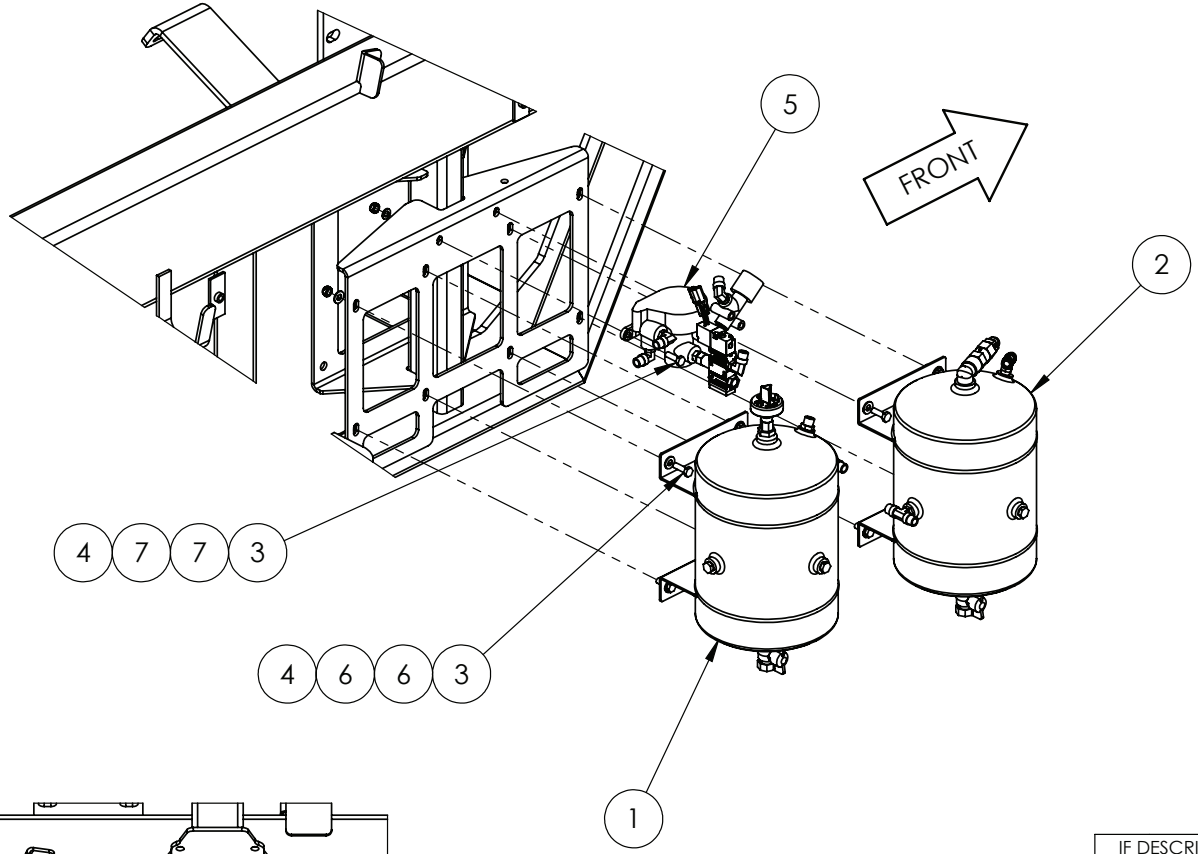

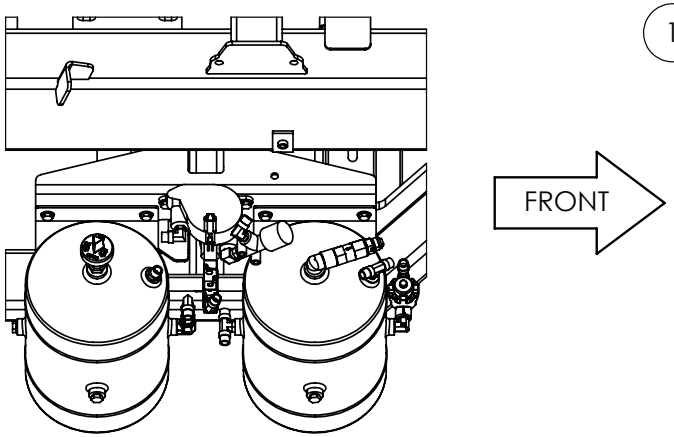

IF DESCRIPTION PREFIX IS ASSEMBLY DRAWING ONLY OR PRODUCTION DRAWING ONLY THE ITEM IS NOT FOR SALE			
ITEM	PART NUMBER	DESCRIPTION	QTY
1	GA4951830	AIR TANK, PRIMARY, FRONT AND PARK BRAKE, G4 S2	1
2	GA4951835	AIR TANK, SECONDARY, REAR BRAKE AND ACCESSORIES, G4 S2	1
3	GA5004711	BOLT M8 X 25 GR8.8 ZP	10
4	GA5052590	NUT M8 NYLOC SS	10
5	GA4952545	PARK BRAKE, PNUEMATIC, SR1 CONTROL VALVE, G4 S2	1
6	GA5003643	WASHER 8mm FLAT SS HD	16
7	GA5003651	WASHER 8mm FLAT SS	4
GA7800186 GOLDACRES		ASSEMBLY DRAWING ONLY, AIR TANKS, PARK BRAKE CONTROL VALVE MOUNT, G4 S2, MY24	REV 00

Park Brake Control Valve Assembly

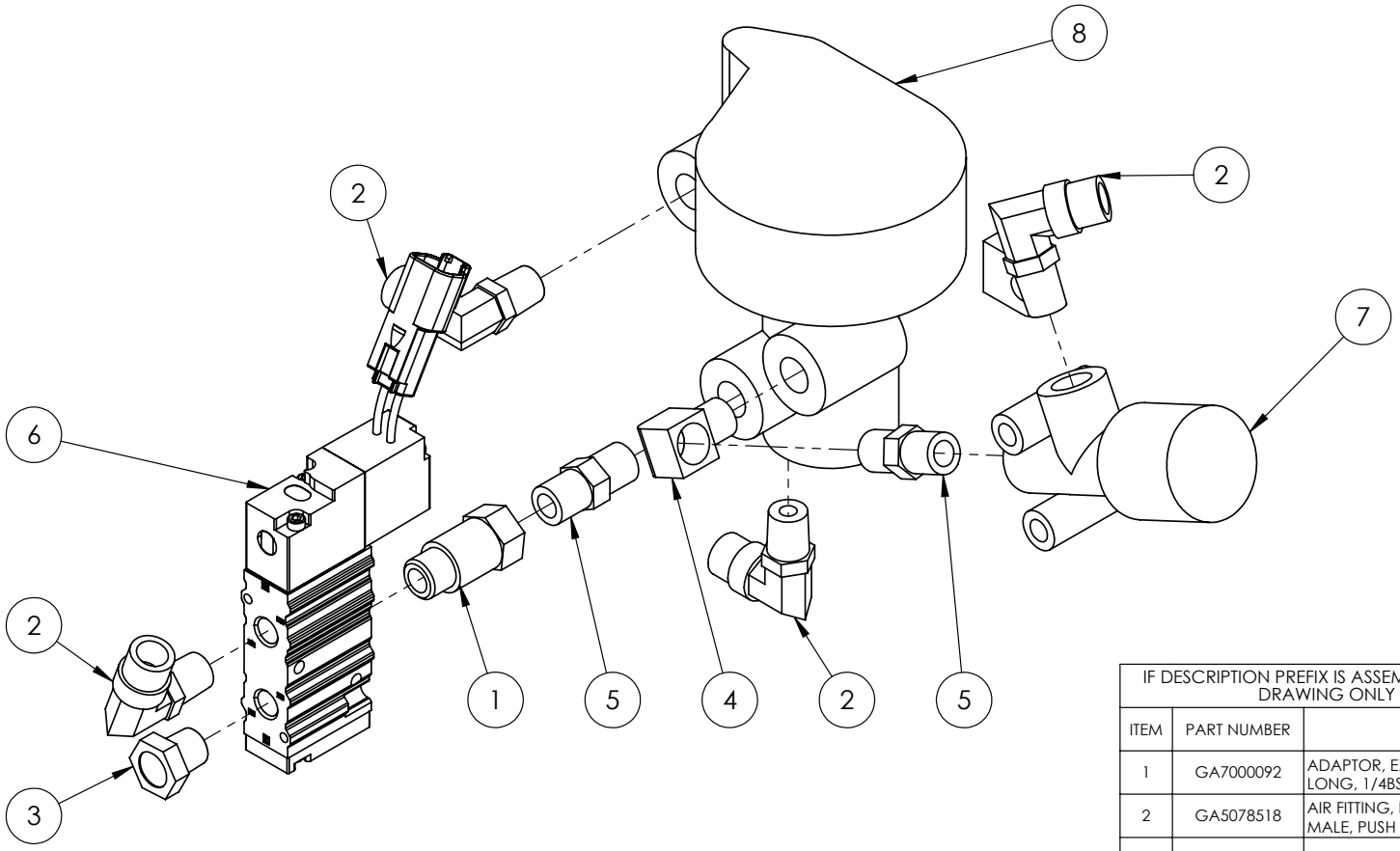

IF DESCRIPTION PREFIX IS ASSEMBLY DRAWING ONLY OR PRODUCTION DRAWING ONLY THE ITEM IS NOT FOR SALE			
ITEM	PART NUMBER	DESCRIPTION	QTY
1	GA7000092	ADAPTOR, EXTENDED, MALE TO FEMALE, 27mm LONG, 1/4BSP	1
2	GA5078518	AIR FITTING, ELBOW, SWIVEL, 3/8" TUBE, 1/4" NPT MALE, PUSH IN, BRASS, ALKON - AQ69-DOTS-6X4	4
3	GA5071207	BREATHER, SILENCER, 1/4 BUTTON	1
4	GA5048305	ELBOW, 90 DEGREE, 1/4" BSP MALE X 1/4" BSP FEMALE, BRASS	1
5	GA5050285	NIPPLE, 1/4 MALE THREAD X 1/4 MALE THREAD, BRASS	2
6	GA7000093	PNEUMATIC SOLENOID VALVE MAC 52 SERIES, WITH DT, 1/4" PORTS NORMALY CLOSED 12V DC 5.4W 52A-11-D0A-DM-DDBA-1BA	1
7	GA7000090	PRESSURE REDUCING VALVE, RV1 STYLE, 60PSI.	1
8	GA5078835	SPRING BRAKE CONTROLL VALVE, SR1, ABC/PACIFIC AIR CONTROLS	1
GA4952545 GOLDACRES		PARK BRAKE, PNUEMATIC, SR1 CONTROL VALVE, G4 S2	REV 00

Air Tank Assembly, Front & Park Brakes

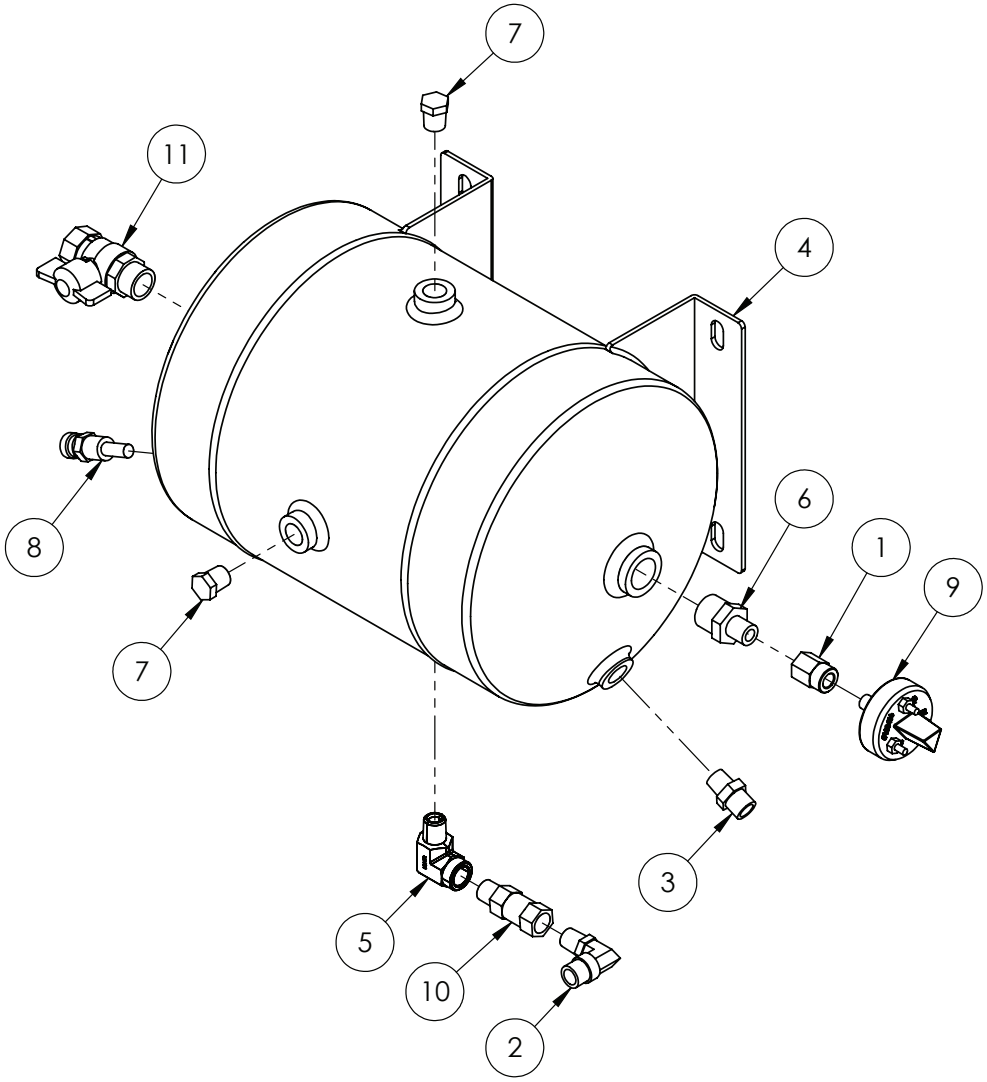

IF DESCRIPTION PREFIX IS ASSEMBLY DRAWING ONLY OR PRODUCTION DRAWING ONLY THE ITEM IS NOT FOR SALE			
ITEM	PART NUMBER	DESCRIPTION	QTY
1	GA5069925	1/4" - 1/8" BSPT FEMALE REDUCING SOCKET	1
2	GA5078516	AIR FITTING, TEE, 3/8" TUBE, PUSH IN, BRASS, ALKON - AQ64-DOT-6	1
3	GA5078521	AIR FITTING, TEE, SWIVEL, 3/8" TUBE, 1/4" NPT MALE, PUSH IN, BRASS, ALKON - AQ72-DOTS-6X4	1
4	GA5070310	AIR TANK-PROTEX AT5	1
5	GA3500209	HYDRAULIC ADAPTOR, ELBOW, 90 DEGREE, 1/4" BSPT MALE X 1/4" BSPT FEMALE, S25-0404	1
6	GA5012259	NIPPLE REDUCING 1/2" X 1/4"	1
7	GA5069335	PLUG 1/4" BSPT BRASS	2
8	GA5017369	PRESSURE RELIEF VALVE	1
9	GA5011059	PRESSURE SWITCH, LOW AIR, 55 PSI ACTUATION, SPDT, 1/8"	1
10	GA5014796	SC3 SINGLE CHECK VALVE 1/4 M/F	1
11	GA5020615	VALVE, BALL, 12mm, 1/2" MALE, FEMALE BUTTERFLY, BRASS	1
GA4951830 GOLDACRES		AIR TANK, PRIMARY, FRONT AND PARK BRAKE, G4 S2	REV 00

Air Tank Assembly, Rear Brake

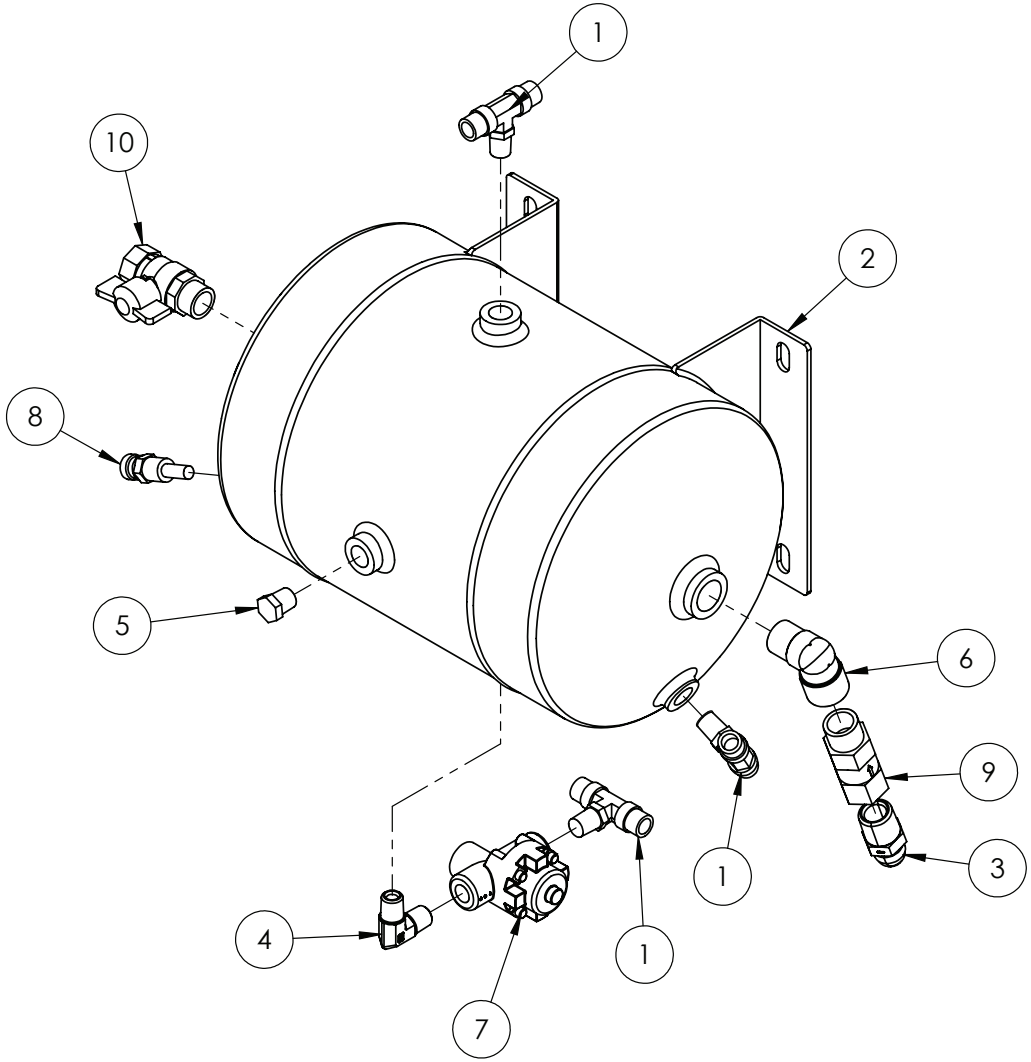

IF DESCRIPTION PREFIX IS ASSEMBLY DRAWING ONLY OR PRODUCTION DRAWING ONLY THE ITEM IS NOT FOR SALE			
ITEM	PART NUMBER	DESCRIPTION	QTY
1	GA5078521	AIR FITTING, TEE, SWIVEL, 3/8" TUBE, 1/4" NPT MALE, PUSH IN, BRASS, ALKON - AQ72-DOTS-6X4	3
2	GA5070310	AIR TANK-PROTEX AT5	1
3	GA3501103	HYDRAULIC ADAPTER, NIPPLE, 1/2" BSPT X 3/4" JIC MALE, S7-0812	1
4	GA3500258	HYDRAULIC COUPLING, ELBOW, 90 DEGREE, 1/4" BSPT MALE X 1/4" BSPT MALE, S49-0404	1
5	GA5069335	PLUG 1/4" BSPT BRASS	1
6	GA5048150	PLUMBING ADAPTOR, ELBOW, 90 DEGREE, 1/2 MALE THREAD X 1/2 FEMALE THREAD, CAST	1
7	GA5013433	PRESSURE PROTECTION VALVE	1
8	GA5017369	PRESSURE RELIEF VALVE	1
9	GA5014795	SC3 SINGLE CHECK VALVE 1/2 M/F	1
10	GA5020615	VALVE, BALL, 12mm, 1/2" MALE, FEMALE BUTTERFLY, BRASS	1
GA4951835 GOLDACRES		AIR TANK, SECONDARY, REAR BRAKE AND ACCESSORIES, G4 S2	REV 00

Fill Pump Chassis Mounting

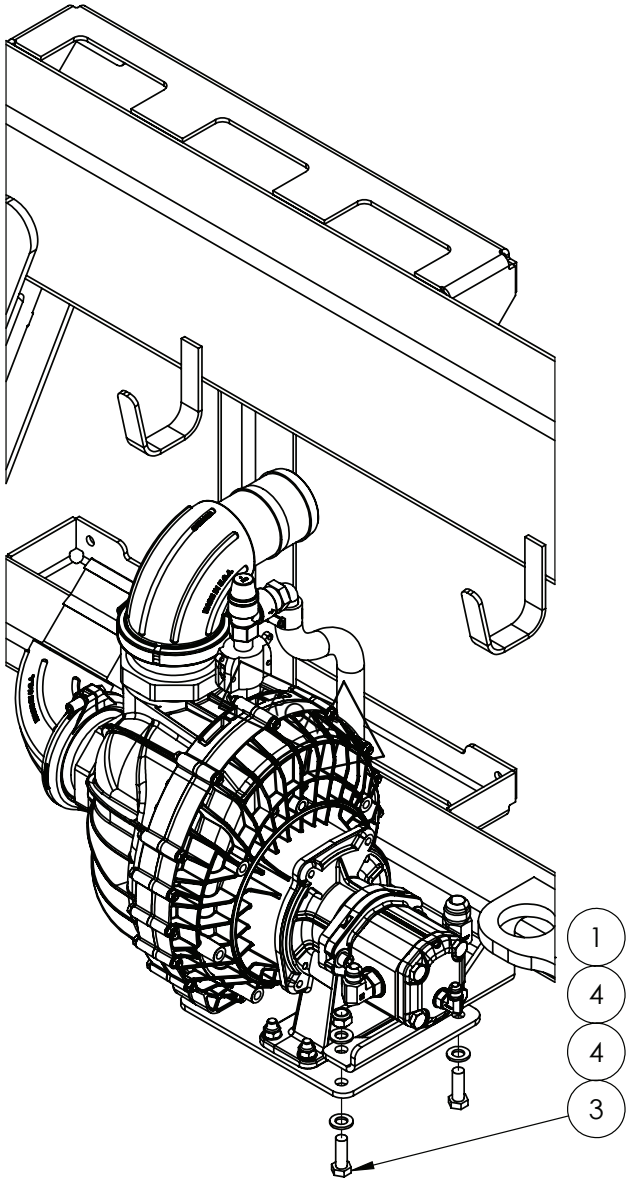

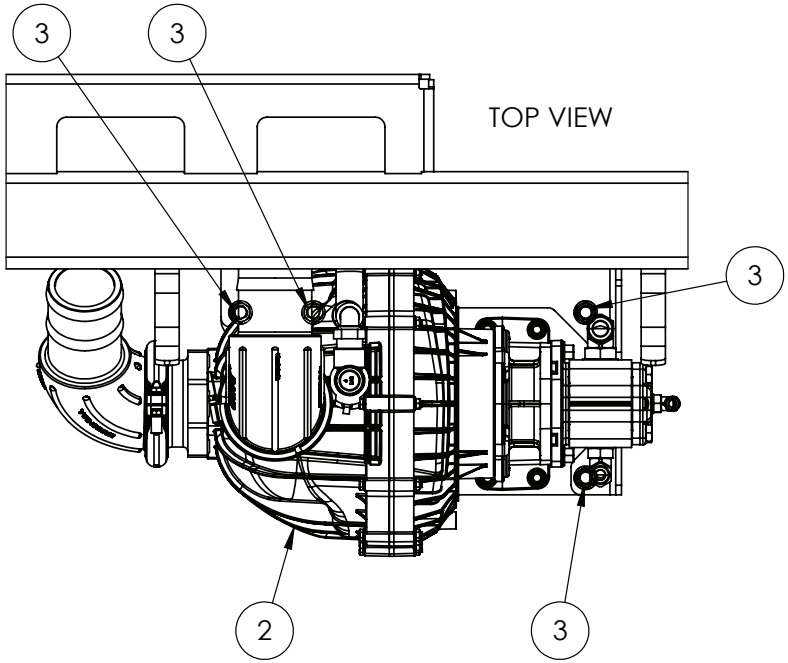

IF DESCRIPTION PREFIX IS ASSEMBLY DRAWING ONLY OR PRODUCTION DRAWING ONLY THE ITEM IS NOT FOR SALE			
ITEM	PART NUMBER	DESCRIPTION	QTY
1	GA5012461	NUT M12 NYLOC ZP	4
2	GA4952200	PUMP ASSEMBLY, 3" FILL, G3V G4V	1
3	GA5000311	SET SCREW M12 X 35 GR 8.8 ZP	4
4	GA5000577	WASHER 12mm FLAT SS HD	8
GA7800187 GOLDACRES		ASSEMBLY DRAWING ONLY, FILL PUMP, CHASSIS MOUNT, G4 S2, MY24	REV 00

3” Fill Pump Assembly

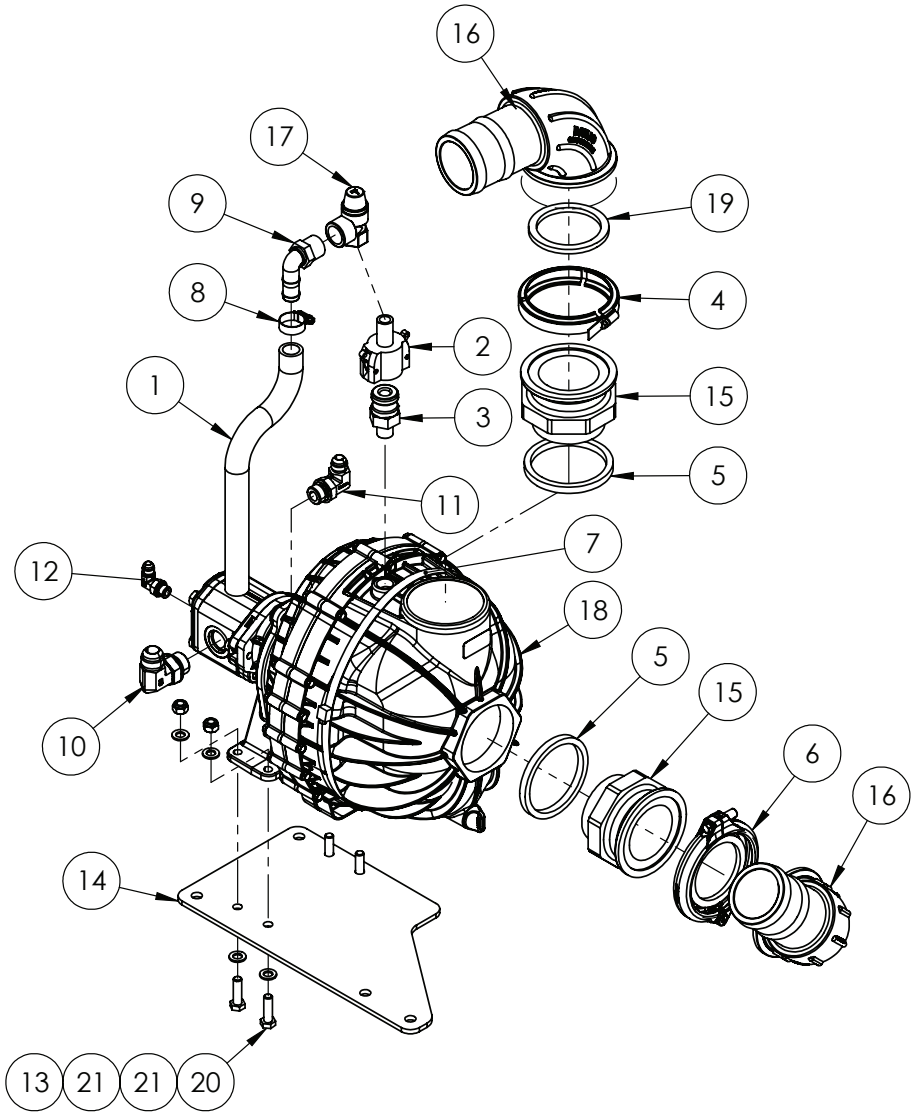

IF DESCRIPTION PREFIX IS ASSEMBLY DRAWING ONLY OR PRODUCTION DRAWING ONLY THE ITEM IS NOT FOR SALE			
ITEM	PART NUMBER	DESCRIPTION	QTY
1	GA2000216	3/4 PRESSURE HOSE CUT AT 350mm	1
2	GA5077128	CAM LEVER, 3/4 FEMALE COUPLING X 1/2 MALE THREAD, BANJO, 75B1/2	1
3	GA5075782	CAM LEVER, 3/4 MALE COUPLING X 1/2 MALE THREAD, BANJO, 050F	1
4	FC300	CLAMP, 3" FLANGE MANIFOLD, BANJO	1
5	GA5078838	EPDM SEAL, 3" NPT THREAD TAPER, PENTAIR FILL PUMP	2
6	GA2000116	FLANGE CLAMP, AND GASKET, 3", SERIES 300, HYPRO	1
7	GA2000639	HOSE CLAMP, 267 - 318mm, 12.7mm WIDE, SS, 1000mm LONG	1
8	GA5000999	HOSE CLAMP, 3/4" SS (16-27/12W)	1
9	GA5077717	HOSE BARB, ELBOW, 90 DEGREE, 3/4 MALE THREAD X 3/4 HOSE, BANJO	1
10	GA3500715	HYDRAULIC ADAPTOR, ELBOW, 1 1/16" UNO TO 1 1/16" JIC, 90 DEG, S91-1717	1
11	GA3500761	HYDRAULIC ADAPTOR, ELBOW, 7/8" UNO TO 3/4" JIC, 90 DEG, S91-1214	1
12	GA3500716	HYDRAULIC ADAPTOR, ELBOW, 90 DEGREE, 9/16" JIC MALE X 9/16" UN MALE O-RING, S91-0909	1
13	GA5000141	NUT M10 NYLOC ZP	4
14	GA4408595	PLATE, FILL PUMP MOUNT, BOLT ON BRACKET, G6 MY20	1
15	GA4583660	PLUMBING ADAPTOR, M300 FLANGE TO 3" NPT THREAD WITH SEAL	2
16	GA2000148	PLUMBING FITTING, 3" FLANGE TO 3" BARB, SWEPT ELBOW, BANJO, M300BRBSWP90	2
17	GA2000131	PRESSSURE RELIEF VALVE, SPIKE, 4 BAR, 1/2" IN, 3/4" OUT, BRASS, CALEFFI	1
18	GA2000146	PUMP, FILL, 3", HYDRAULICALLY DRIVEN, HYPRO	1
19	GA5076723	SEAL, EPDM, SUIT 3 FLANGE FITTING, BANJO, 300G	1
20	GA5006111	SET SCREW M10 X 35 GR8.8 ZP	4
21	GA5000117	WASHER 10mm FLAT SS HD	8
GA4952200 GOLDACRES		PUMP ASSEMBLY, 3" FILL, G4 S2, MY24	REV 00.C

Spray Pump & Suction Filter, Chassis Mounting, UDOR, Zeta 260

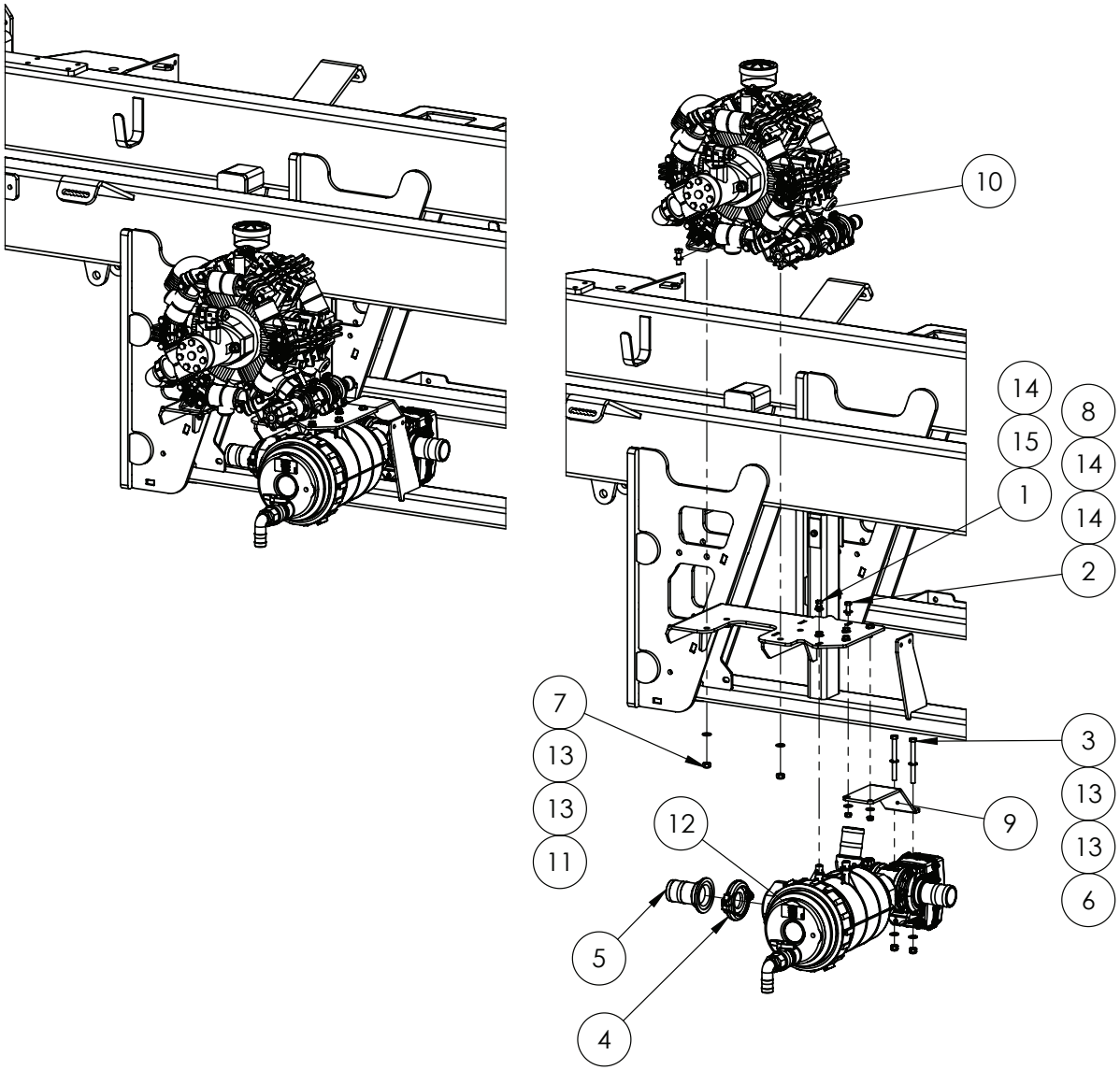

IF DESCRIPTION PREFIX IS ASSEMBLY DRAWING ONLY OR PRODUCTION DRAWING ONLY THE ITEM IS NOT FOR SALE			
ITEM	PART NUMBER	DESCRIPTION	QTY
1	GA5004085	BOLT M8 X 20 GR8.8 ZP	4
2	GA5004711	BOLT M8 X 25 GR8.8 ZP	2
3	GA0500039	BOLT, 3/8" X 4" UNC ZP, GR8	2
4	GA2000114	FLANGE CLAMP, AND GASKET, 1.5", SERIES 200, HYPRO	1
5	GA5077859	HOSE BARB, STRAIGHT, 2 FLANGE X 2 HOSE, BANJO	1
6	GA5048345	NUT 3/8", NYLOC, ZP, UNC	2
7	GA5000141	NUT M10 NYLOC ZP	4
8	GA5004917	NUT M8 NYLOC ZP	2
9	GA4406190	PLATE, SUCTION FILTER VALVE MOUNT, G6 MY20	1
10	GA4952230	PUMP ASSEMBLY, UDOR ZETA 260, G4 S2, MY24	1
11	GA5006145	SET SCREW M10 X 30 SS A2-70	4
12	GA4949425	SPRAY PUMP SUCTION FILTER ASSEMBLY, G6, MY20	1
13	GA5000117	WASHER 10mm FLAT SS HD	12
14	GA5003643	WASHER 8mm FLAT SS HD	8
15	GA5004919	WASHER 8mm SPRING SS	4
GA7800182 GOLDACRES		ASSEMBLY DRAWING ONLY, SPRAY PUMP, CHASSIS MOUNT, G4 SERIES 2, MY24	REV 01

BUILD OPTIONS:
70011 - 260L/MIN DIAPHRAGM PUMP - HYDRAULIC DRIVE

Spray Pump Assembly, UDOR, Zeta 260

REPLACEMENT PARTS			
ITEM	PART NUMBER	DESCRIPTION	QTY
A	GA5023115	SEAL KIT, 60CC & 80CC HYDRAULIC MOTOR, GA5009525 AND GA5047515	-

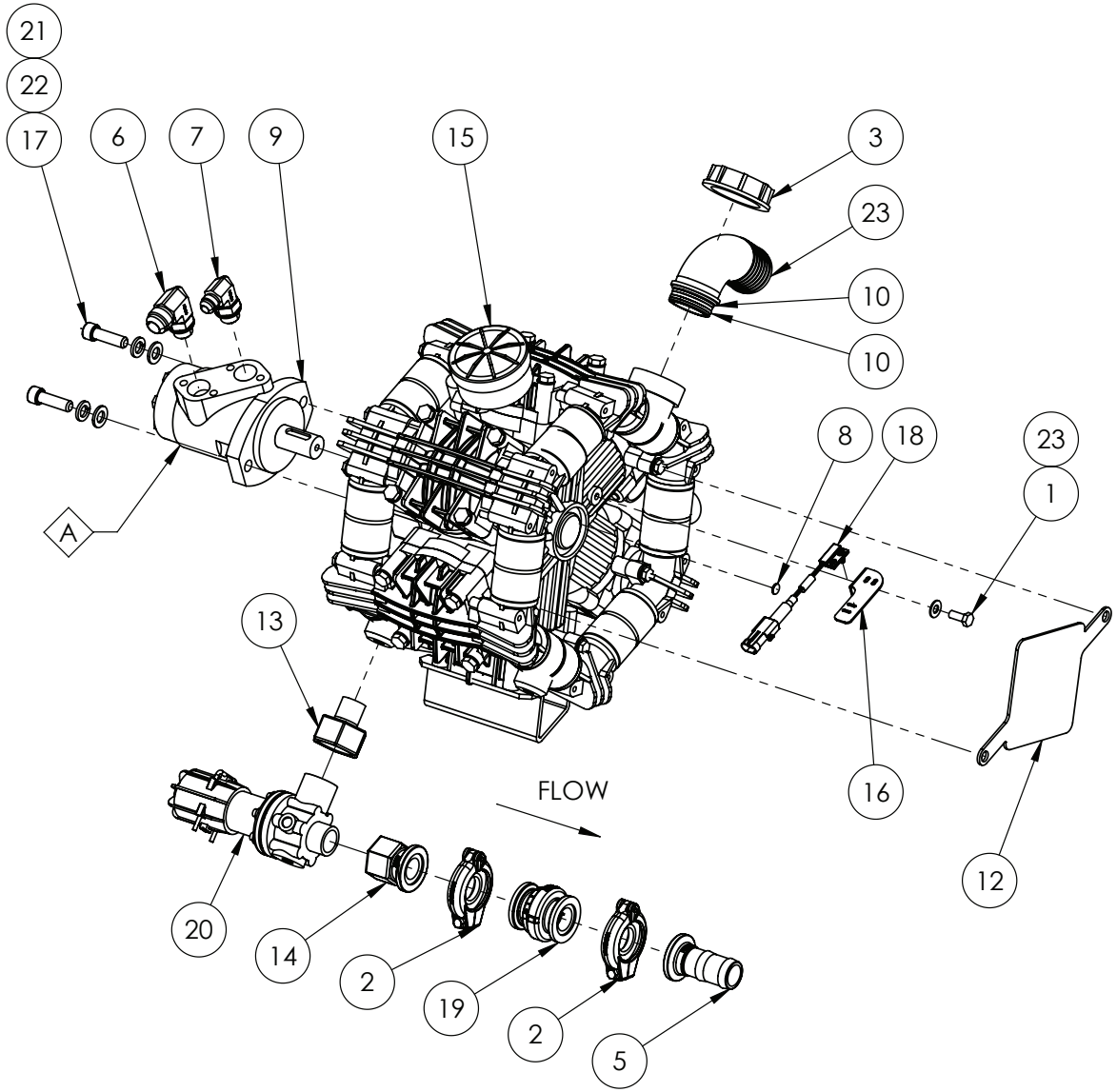

IF DESCRIPTION PREFIX IS ASSEMBLY DRAWING ONLY OR PRODUCTION DRAWING ONLY THE ITEM IS NOT FOR SALE			
ITEM	PART NUMBER	DESCRIPTION	QTY
1	GA5052595	BOLT M8 X 20 SS A270	1
2	GA2000113	FLANGE CLAMP, AND GASKET, 1", SERIES 100, HYPRO	2
3	GA5076605	FLY NUT, 2", ARAG, 2002070	1
4	GA5076262	HOSE BARB, ELBOW, 90 DEGREE, 2" FLY NUT END X 52 mm HOSE, ARAG, 116752	1
5	GA5077806	HOSE BARB, STRAIGHT, 1 FLANGE X 1 1/4 HOSE, BANJO	1
6	GA3500723	HYDRAULIC ADAPTOR, ELBOW, 90 DEGREE, 1 1/16" JIC MALE X 1/2" BSPP MALE O-RING, S76-0817	1
7	GA3500722	HYDRAULIC ADAPTOR, ELBOW, 90 DEGREE, 3/4" JIC MALE X 1/2" BSPP MALE O-RING, S76-0812	1
8	GA5016169	MAGNET, HIGH STRENGTH, 12mm DIAMETER X 1.5mm THICK	1
9	GA5047515	MOTOR, HYDRAULIC, 80CC/REV, 25.4mm SHAFT, SUIT SPRAY PUMP DRIVE	1
10	GA5048385	O RING, 42.5 X 2.62, BS131, SUIT 2" HOSE BARB	1
11	GA5076097	O RING, 42.52 X 2.62, 110193	2
12	PUMPCOVER250	PLATE, REAR PUMP SHAFT COVER, RO250, ZETA 260 AND 300	1
13	GA4583645	PLUMBING FITTING, 3/4" MALE TO 1 1/4" FEMALE, REDUCING BUSH	1
14	GA5077817	PLUMBING COUPLING, 1" FLANGE X 1" FEMALE THREAD, BANJO	1
15	GA5054500	PUMP ZETA 260 MI-1	1
16	GA4525010	RPM SENSOR MOUNT BRACKET, SUIT UDOR MI PUMP	1
17	GA5000321	SHCS M12 X 40 GR12.9 ZP	2
18	GA5076331	SENSOR, SPRAY PUMP RPM SUIT 440, 450 & G-HUB, RAVEN, 11170171293	1
19	GA5077889	VALVE, CHECK, 1" MANIFOLD, FLANGE, BANJO, MCV100	1
20	GA5075640	VALVE, PRESSURE RELIEF, 15 BAR, 1" MALE THREAD INLET X 1 1/4" MALE THREAD OUTLET, POLMAC	1
21	GA5000577	WASHER 12mm FLAT SS HD	2
22	GA5000575	WASHER 12mm SPRING SS	2
23	GA5003643	WASHER 8mm FLAT SS HD	1
GA4952230 GOLDACRES		PUMP ASSEMBLY, UDOR ZETA 260, G4 S2, MY24	REV 01

Spray Pump & Suction Filter, Chassis Mounting, ARAG, MSP400

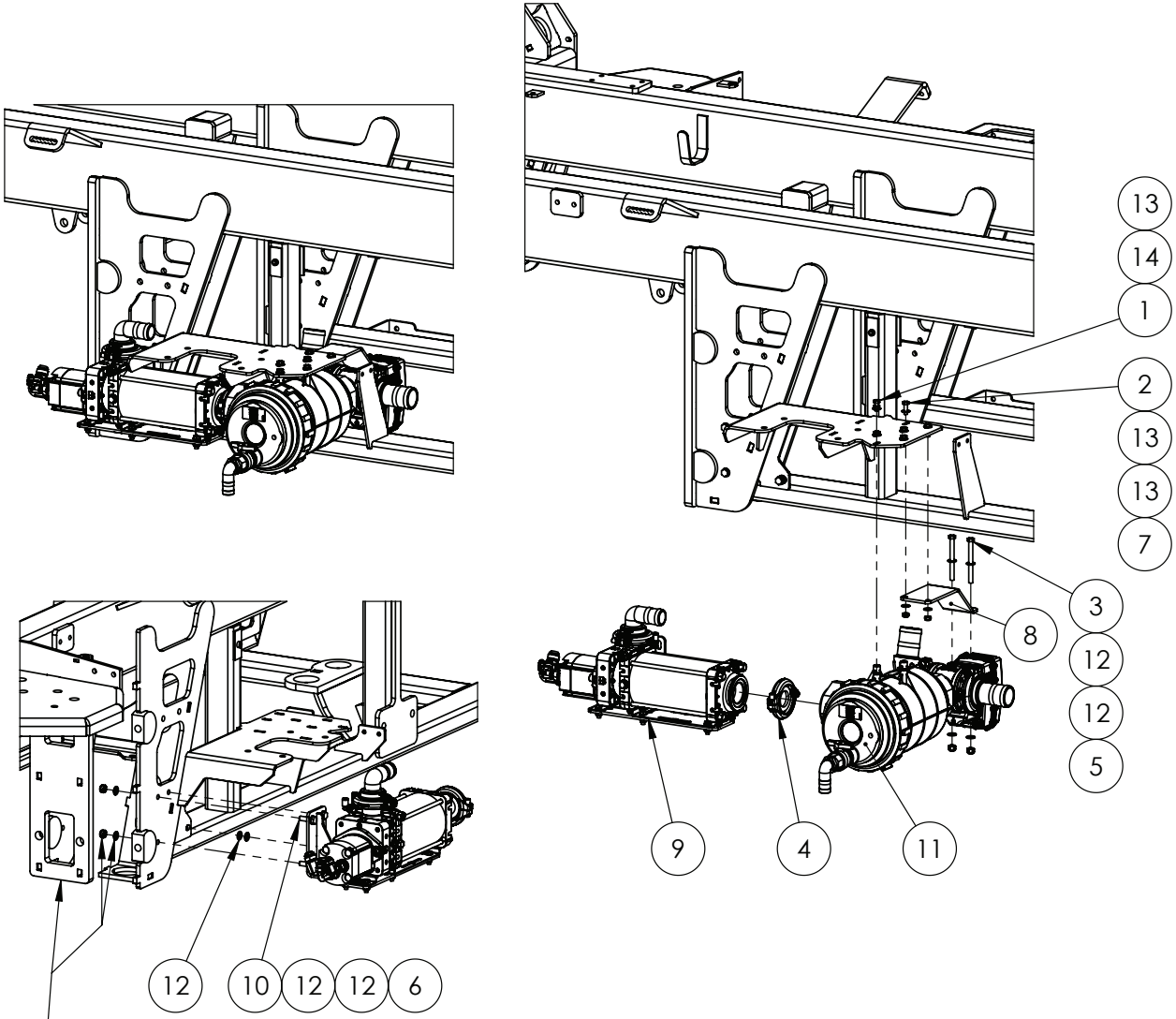

2 X ITEM (12) BETWEEN CHASSIS PLATE AND PUMP MOUNTING PLATE

CHASSIS COMPONENTS EXPLODED TO SHOW ITEM (12) AND (6)

IF DESCRIPTION PREFIX IS ASSEMBLY DRAWING ONLY OR PRODUCTION DRAWING ONLY THE ITEM IS NOT FOR SALE			
ITEM	PART NUMBER	DESCRIPTION	QTY
1	GA5004085	BOLT M8 X 20 GR8.8 ZP	4
2	GA5004711	BOLT M8 X 25 GR8.8 ZP	2
3	GA0500039	BOLT, 3/8" X 4" UNC ZP, GR8	2
4	GA2000114	FLANGE CLAMP, AND GASKET, 1.5", SERIES 200, HYPRO	1
5	GA5048345	NUT 3/8", NYLOC, ZP, UNC	2
6	GA5000141	NUT M10 NYLOC ZP	4
7	GA5004917	NUT M8 NYLOC ZP	2
8	GA4406190	PLATE, SUCTION FILTER VALVE MOUNT, G6 MY20	1
9	GA4949420	PUMP MOUNT BRACKET, ARAG MSP400, G6, MY20	1
10	GA5015011	SET SCREW M10 X 35	4
11	GA4949425	SPRAY PUMP SUCTION FILTER ASSEMBLY, G6, MY20	1
12	GA5000117	WASHER 10mm FLAT SS HD	14
13	GA5003643	WASHER 8mm FLAT SS HD	8
14	GA5004919	WASHER 8mm SPRING SS	4
GA7800182 GOLDACRES		ASSEMBLY DRAWING ONLY, SPRAY PUMP, CHASSIS MOUNT, G4 SERIES 2, MY24	REV 01

BUILD OPTIONS:
70012 - CENTRIFUGAL PUMP

Spray Pump Assembly, Centrifugal, ARAG, MSP400

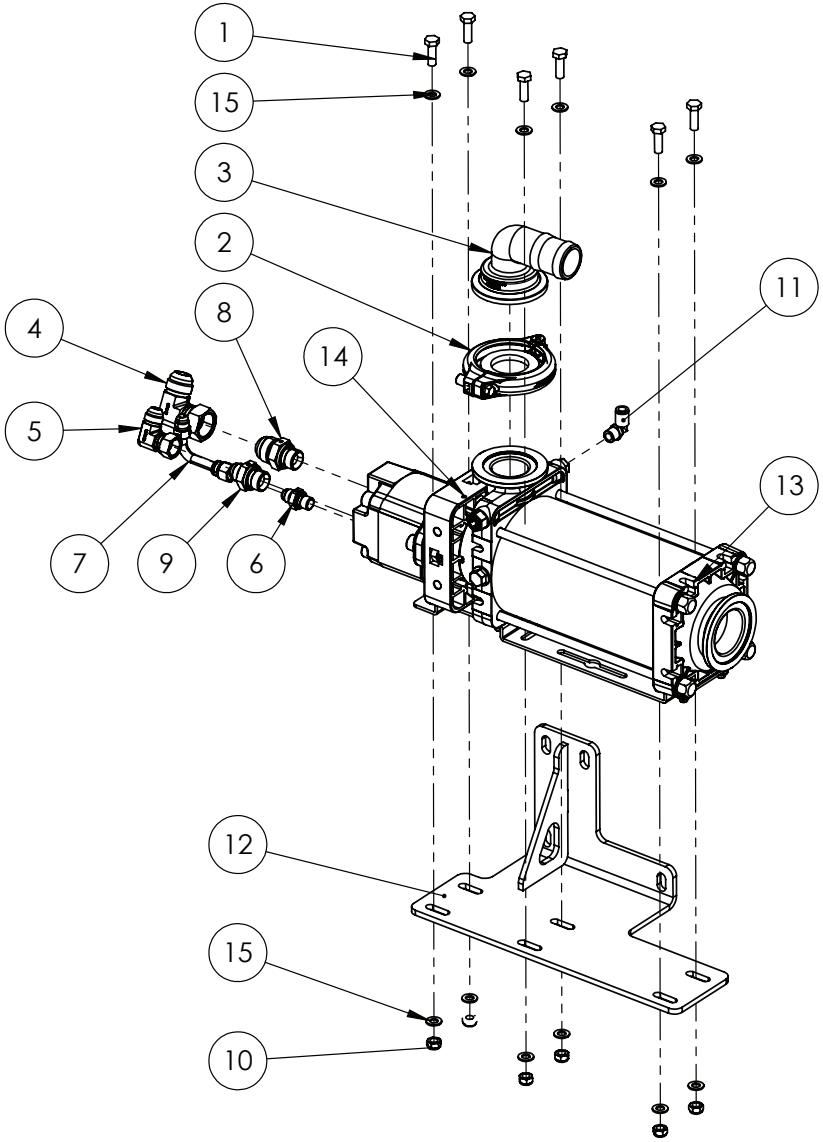

IF DESCRIPTION PREFIX IS ASSEMBLY DRAWING ONLY OR PRODUCTION DRAWING ONLY THE ITEM IS NOT FOR SALE			
ITEM	PART NUMBER	DESCRIPTION	QTY
1	GA5004711	BOLT M8 X 25 GR8.8 ZP	6
2	GA2000114	FLANGE CLAMP, AND GASKET, 1.5", SERIES 200, HYPRO	1
3	GA5077834	HOSE BARB, ELBOW, 90 DEGREE, 2" FLANGE X 1 1/2" HOSE, BANJO	1
4	GA3500823	HYDRAULIC ADAPTOR ELBOW, 1 1/16" JIC MALE X 1 1/16" JIC FEMALE SWIVEL, S15-1717	1
5	GA3500822	HYDRAULIC ADAPTOR ELBOW, 3/4" JIC MALE X 3/4" JIC FEMALE SWIVEL, S15-1212	1
6	GA3500544	HYDRAULIC ADAPTOR NIPPLE, 1/4" BSP O-RING X 9/16" JIC, S74-0409	1
7	GA3501299	HYDRAULIC ADAPTOR, TUBE BEND, 90 DEG, 9/16" JIC MALE TO 9/16" JIC FEMALE SWIVEL, S103-0909	1
8	GA3500720	HYDRAULIC ADAPTER, NIPPLE, 1/2" BSPP O-RING MALE X 1 1/16" JIC MALE, S74-0817	1
9	GA3500303	HYDRAULIC ADAPTER, NIPPLE, 1/2" BSPP O-RING MALE X 3/4" JIC MALE, S74-0812	1
10	GA5004917	NUT M8 NYLOC ZP	6
11	GA5052690	PNEUMATIC FITTING, ELBOW, 90 DEGREE, 1/4 BSP MALE X 8mm PUSH TYPE, METAL	1
12	GA4602440	PUMP MOUNT BRACKET, ARAG MSP400, G6, MY20	1
13	GA2000123	PUMP, MULTISTAGE CENTRIFUGAL, HYDRAULIC DRIVE, 2" FP FLANGE INLET, 2" SP FLANGE OUTLET, ARAG MP400	1
14	GA3000186	SENSOR, PUMP RPM, ARAG MP400 / MSP400	1
15	GA5003643	WASHER 8mm FLAT SS HD	12
GA4949420 GOLDACRES		PUMP AND MOUNT BRACKET, ARAG MSP400, G4 & G6, MY24	REV 01

Spray Pump & Suction Filter, Chassis Mounting, ACE 650

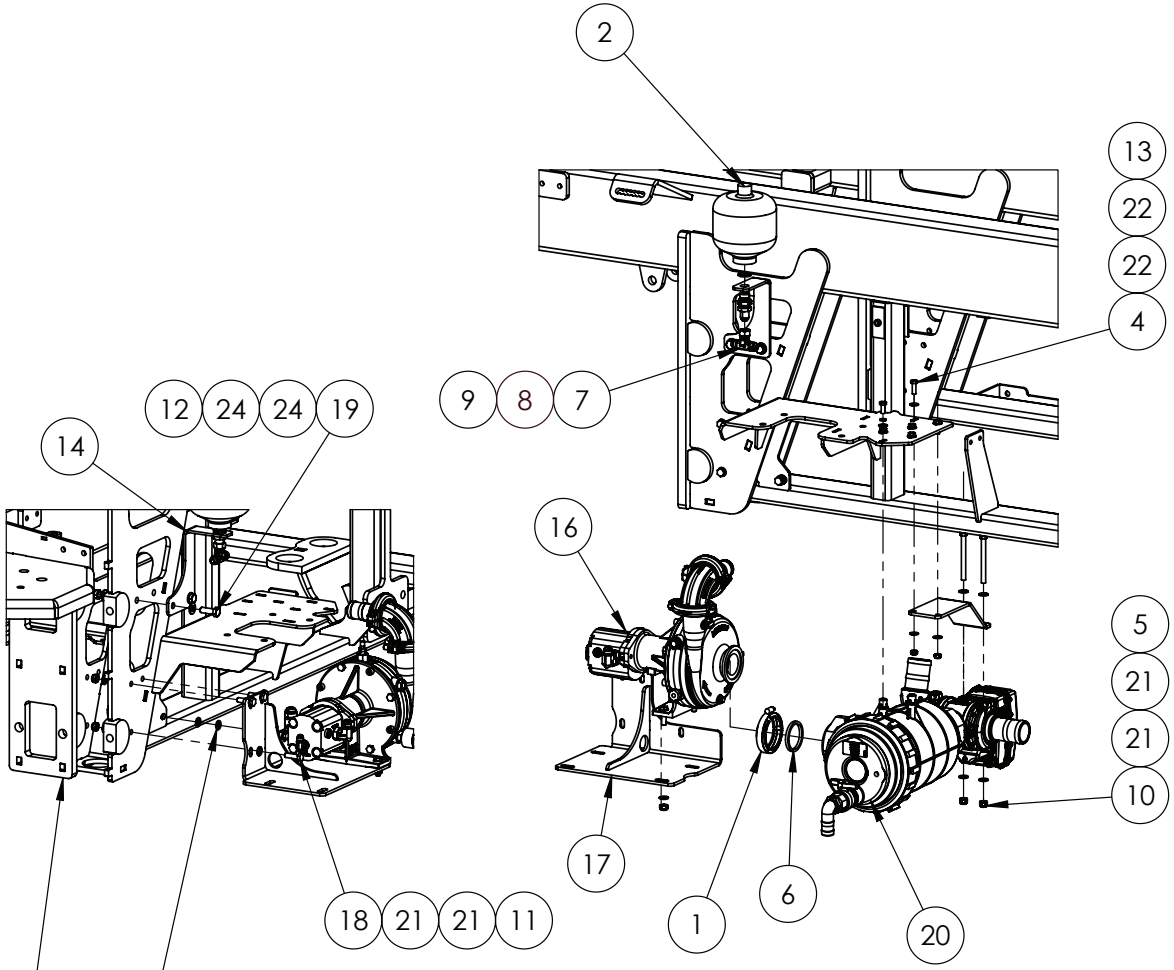

2 X ITEM (18) BETWEEN CHASSIS PLATE AND PUMP MOUNTING PLATE

CHASSIS COMPONENTS EXPLODED TO SHOW ITEM (21) AND (11)

IF DESCRIPTION PREFIX IS ASSEMBLY DRAWING ONLY OR PRODUCTION DRAWING ONLY THE ITEM IS NOT FOR SALE			
ITEM	PART NUMBER	DESCRIPTION	QTY.
1	FC220	2 FULL PORT WORM SCREW CLAMP	1
2	GA5007788	ACCUMULATOR 1.0L PRECHARGE 35BAR T/s YAW	1
3	GA5004085	BOLT M8 X 20 GR8.8 ZP	4
4	GA5004711	BOLT M8 X 25 GR8.8 ZP	2
5	GA0500039	BOLT, 3/8" X 4" UNC ZP, GR8	2
6	GA2000023	GASKET 2" BANJO SUIT 220	1
7	GA3501881	HYDRAULIC ADAPTER, TEE, 3/4" JIC MALE X 3/4" JIC MALE X 3/4" JIC FEMALE SWIVEL, S68-121212	1
8	GA3500717	HYDRAULIC ADAPTOR, BULKHEAD NIPPLE, 1/2" BSPP MALE X 3/4" JIC MALE, S130P-0812	1
9	GA3500159	HYDRAULIC SEAL, BONDED, 1/2", RL21D-08	1
10	GA5048345	NUT 3/8", NYLOC, ZP, UNC	2
11	GA5000141	NUT M10 NYLOC ZP	6
12	GA5012461	NUT M12 NYLOC ZP	2
13	GA5004917	NUT M8 NYLOC ZP	2
14	GA4000841	PLATE, BRACKET, ACE PUMP ACUMULATOR BRACKET, G4S2	1
15	GA4406190	PLATE, SUCTION FILTER VALVE MOUNT, G6 MY20	1
16	GA4909757	PRODUCTION DRAWING ONLY, CENTRIFUGAL PUMP, 644 LPM, ACE PUMP ASSEMBLY, G4S2	1
17	GA4605167	PUMP MOUNT BRACKET, ACE CENTRIFUGAL, G4S2	1
18	GA5015011	SET SCREW M10 X 35	6
19	GA5000311	SET SCREW M12 X 35 GR8.8 ZP	2
20	GA4949425	SPRAY PUMP SUCTION FILTER ASSEMBLY, G6, MY20	1
21	GA5000117	WASHER 10mm FLAT SS HD	18
22	GA5003643	WASHER 8mm FLAT SS HD	8
23	GA5004919	WASHER 8mm SPRING SS	4
24	GA5000577	WASHER M12 FLAT SS HD	4
GA7800182 GOLDACRES		ASSEMBLY DRAWING ONLY, SPRAY PUMP, CHASSIS MOUNT, G4 SERIES 2, MY24	REV 01

BUILD OPTIONS:
70013 - CENTRIFUGAL PUMP ACE 650 MAX SERIES

Spray Pump Assembly, Centrifugal, ACE 650

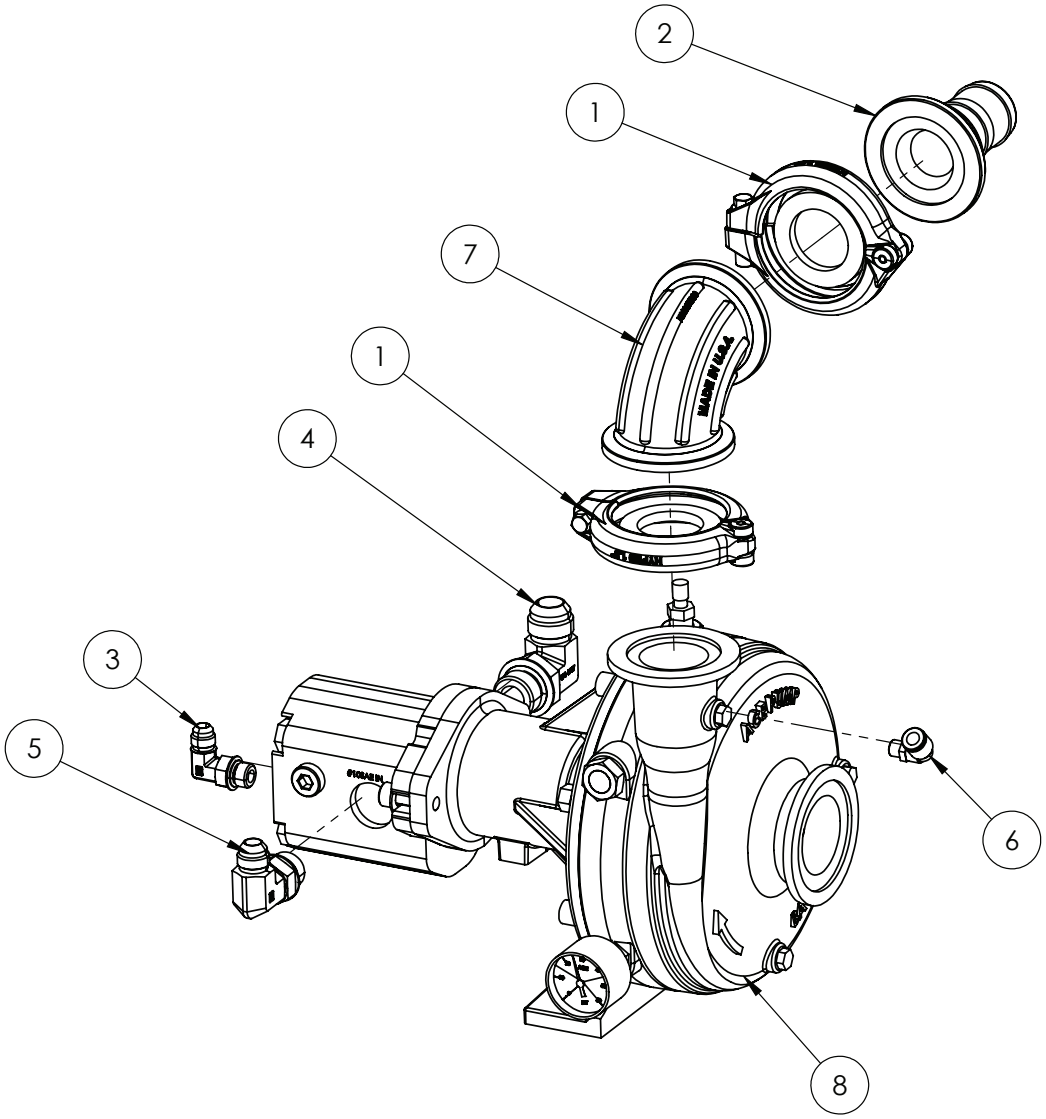

IF DESCRIPTION PREFIX IS ASSEMBLY DRAWING ONLY OR PRODUCTION DRAWING ONLY THE ITEM IS NOT FOR SALE			
ITEM	PART NUMBER	DESCRIPTION	QTY.
1	GA2000114	FLANGE CLAMP, AND GASKET, 1.5", SERIES 200, HYPRO	2
2	GA5077833	HOSE BARB, FLANGE, STRAIGHT, 2 FLANGE X 1 1/2 HOSE, BANJO, M200150BRB	1
3	GA3500716	HYDRAULIC ADAPTOR ELBOW, 9/16" UNO TO 9/16" JIC, 90 DEG, S91-0909	1
4	GA3500715	HYDRAULIC ADAPTOR, ELBOW, 1 1/16" UNO TO 1 1/16" JIC, 90 DEG, S91-1717	1
5	GA3500761	HYDRAULIC ADAPTOR, ELBOW, 7/8" UNO TO 3/4" JIC, 90 DEG, S91-1214	1
6	GA5018339	PNEUMATIC FITTING, ELBOW, 90°, 8MM PUSH TYPE FITTING X 1/8' MALE THREAD	1
7	GA2000434	PLUMBING FITTING, 2" FLANGED SWEEP ELBOW, 90	1
8	GA2000277	PUMP, CENTRIFUGAL, 644 LPM, OASIS RUN DRY SEAL, ACE	1
GA4909757 GOLDACRES		PRODUCTION DRAWING ONLY, CENTRIFUGAL PUMP, 644 LPM, ACE PUMP ASSEMBLY, G4S2	REV 00

Suction Filter Assembly

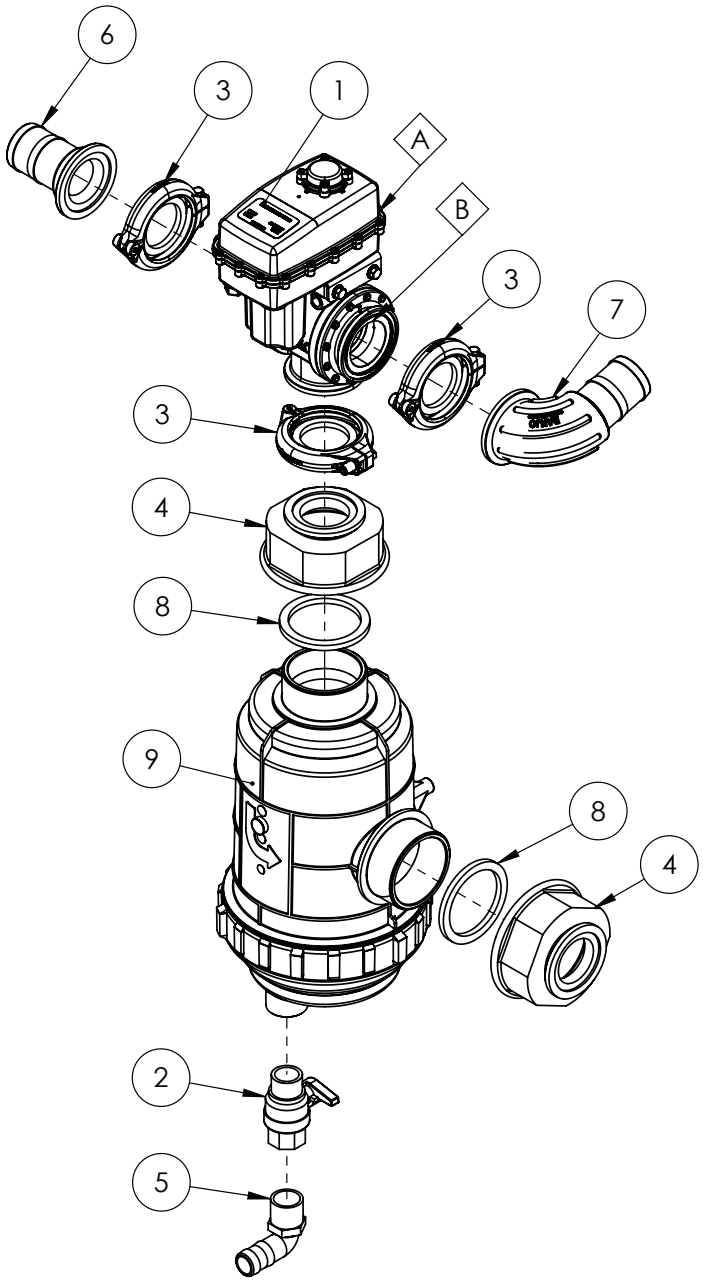

REPLACEMENT PARTS			
ITEM	PART NUMBER	DESCRIPTION	QTY
A	GA2000160	BALL VALVE, ACTUATOR ONLY, SUIT GA2000143, KZ VALVE	-
B	GA2000156	BALL VALVE, VALVE ONLY, SUIT GA2000143, KZ VALVE	-

IF DESCRIPTION PREFIX IS ASSEMBLY DRAWING ONLY OR PRODUCTION DRAWING ONLY THE ITEM IS NOT FOR SALE			
ITEM	PART NUMBER	DESCRIPTION	QTY
1	GA2000143	BALL VALVE, MOTORISED, 3 WAY, 2" FLANGE CONNECTION, BOTTOM LOAD ON/OFF/ON, 3 SECOND, KZ VALVE	1
2	GA5067620	BALL VALVE, 1" MALE / FEMALE, TEE HANDLE, BRASS	1
3	GA2000115	FLANGE CLAMP, AND GASKET, 2", SERIES 220, HYPRO	3
4	GA4550450	FLANGE, M220 X 3" BSP FEMALE, PLASTIC	2
5	GA5077723	HOSE BARB, ELBOW, 90 DEGREE, 1" MALE X 1" HOSE, BANJO	1
6	GA5077859	HOSE BARB, STRAIGHT, 2 FLANGE X 2 HOSE, BANJO	1
7	GA2000071	PLUMBING FITTING, SWEEP ELBOW, 90, 2" FLANGE TO 2" BARB, M220BRBSWP90, BANJO	1
8	GA5076723	SEAL, EPDM, SUIT 3 FLANGE FITTING, BANJO, 300G	2
9	GA2000101	SUCTION FILTER, 3" 32 MESH, 3" BSP MALE THREADS, ARAG	1
10	GA8701503	DECAL, SPRAY PUMP FILTER	1
11	GA8701104	DECAL, TANK SUCTION VALVE	1
GA4949425 GOLDACRES		SPRAY PUMP SUCTION FILTER ASSEMBLY, G6, MY20	REV 01.B

Transfer Case & Oil Cooler Chassis Mounting

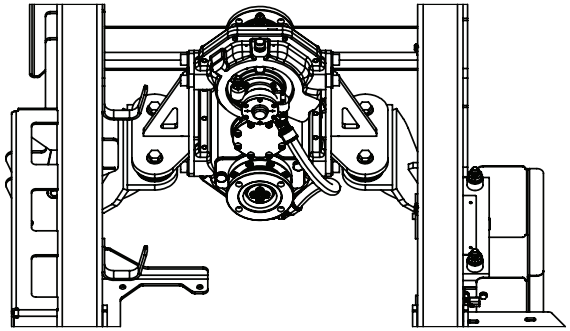

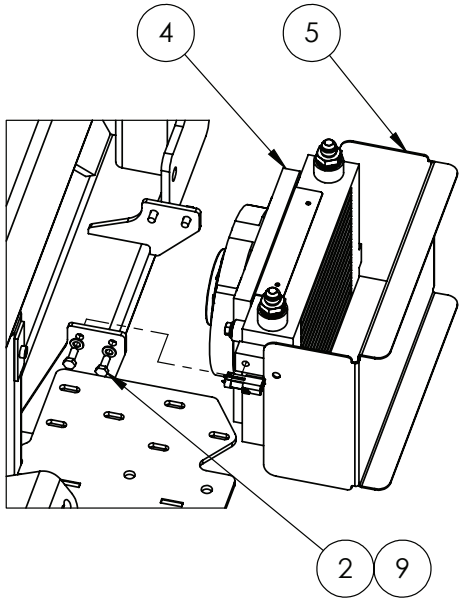

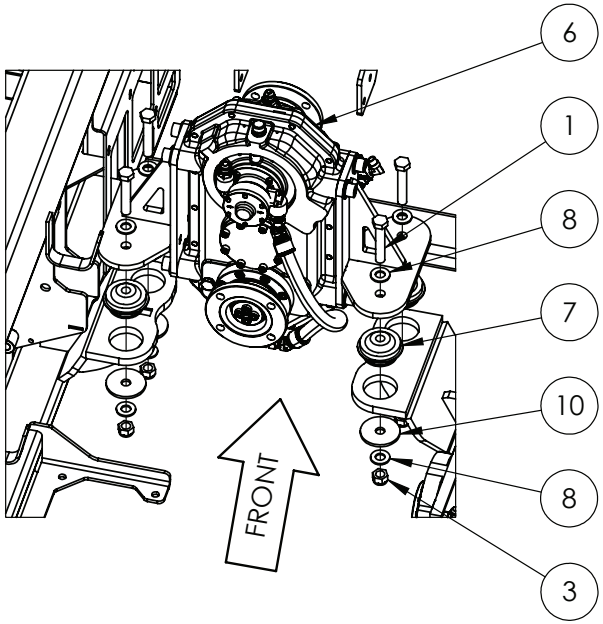

IF DESCRIPTION PREFIX IS ASSEMBLY DRAWING ONLY OR PRODUCTION DRAWING ONLY THE ITEM IS NOT FOR SALE			
ITEM	PART NUMBER	DESCRIPTION	QTY
1	GA5011297	BOLT M16 X 90 GR8.8 ZP	4
2	GA5004085	BOLT M8 X 20 GR8.8 ZP	4
3	GA5001029	NUT M16 NYLOC ZP	4
4	GA4952715	OIL COOLER ASSEMBLY, TRANSFER CASE, 4WD, G4 S2	1
5	GA4415485	PLATE, GUARD, TRANSFER CASE COOLER, G4, S2	1
6	GA4914365	PRODUCTION DRAWING ONLY, TRANSFER CASE ASSEMBLY, G4, S2	1
7	GA5070020	VIBRATION ISOLATOR - 80mm	4
8	GA5001043	WASHER 16mm FLAT SS HD	8
9	GA5003651	WASHER 8mm FLAT SS	4
10	GA4502820	WASHER, 70mm OD X 16.5mm ID X 5mm THICK	4
GA7800188 GOLDACRES		ASSEMBLY DRAWING ONLY, TRANSFER CASE, COOLER, CHASSIS MOUNT, G4 S2, MY24	REV 00

Transfer Case, Mounting Brackets & Hardware

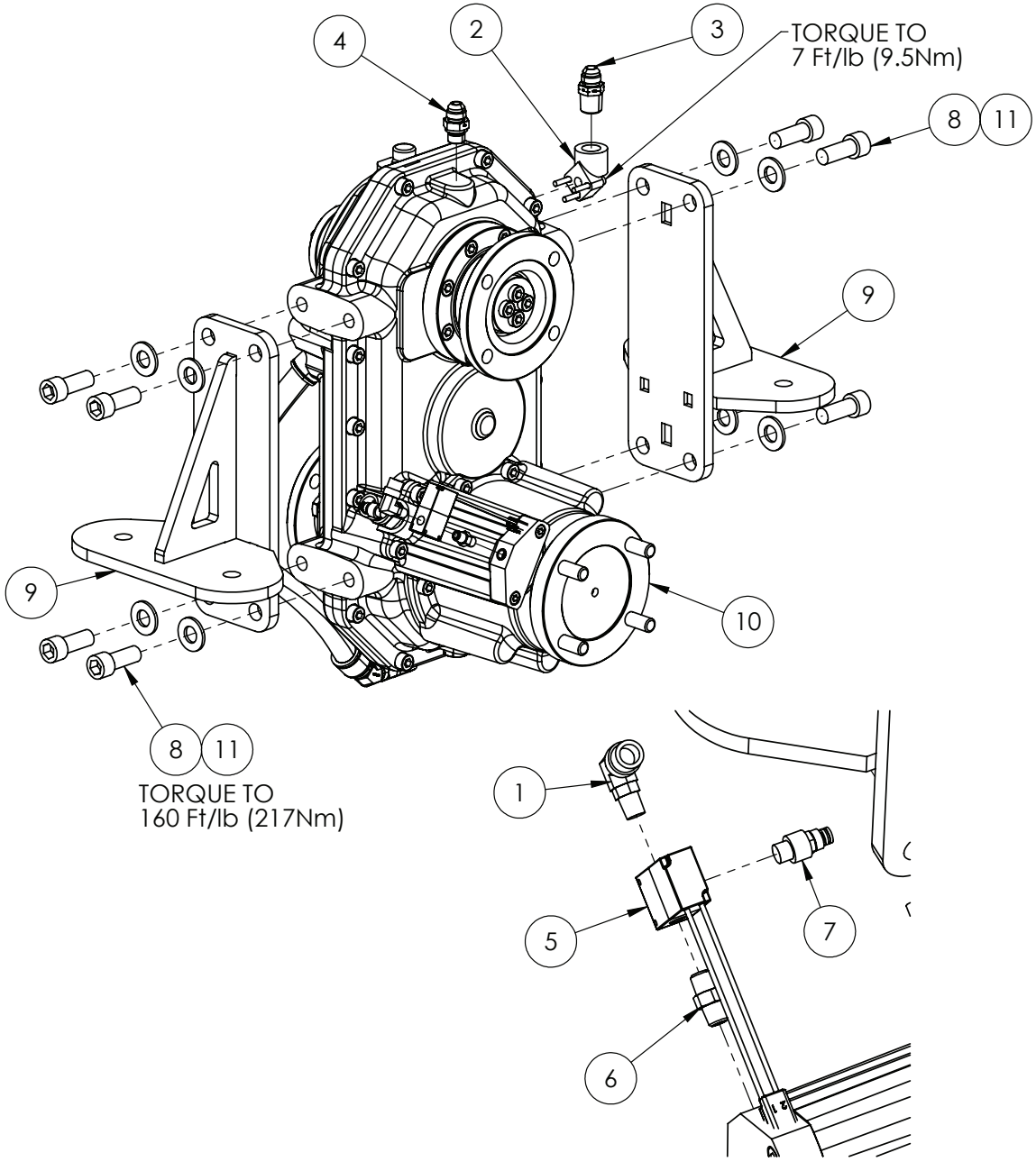

IF DESCRIPTION PREFIX IS ASSEMBLY DRAWING ONLY OR PRODUCTION DRAWING ONLY THE ITEM IS NOT FOR SALE			
ITEM	PART NUMBER	DESCRIPTION	QTY
1	GA5078525	AIR FITTING, ELBOW, SWIVEL, 3/8" TUBE, 1/8" NPT MALE, PUSH IN, BRASS, ALKON - AQ69-DOTS-6X2	1
2	GA3500606	HYDRAULIC PORT ADAPTOR, 1/2" BSP MALE, 26mm PCD, M5, INC O-RING AND BOLTS, WDA0.512	1
3	GA3500760	HYDRAULIC ADAPTER, NIPPLE, 1/2" NPT MALE X 3/4" JIC MALE, S7N-0812	1
4	GA3501598	HYDRAULIC ADAPTOR, STRAIGHT, 3/8" BSPP MALE O-RING X 3/4" JIC MALE, S74-0612	1
5	GA5071236	PNEUMATIC SOLENOID VALVE MAC 35 SERIES 1/8" PORTS WITH DEUTSCH CONNECTOR	1
6	GA5025395	PNEUMATIC ADAPTOR, NIPPLE, 1/8" NPT MALE X 1/8" NPT MALE	1
7	GA7000014	RESTRICTOR, ADJUSTABLE EXHAUST, ET-01, PNEUTECH	1
8	GA5000925	SHCS M16 X 40 GR12.9 ZP	8
9	GA4661795	TRANSFER CASE MOUNT, G3 G4	2
10	GA2700069	TRANSFER CASE, 4WD, DROMOS, G3 G4	1
11	GA5001043	WASHER 16mm FLAT SS HD	8
GA4914365 GOLDACRES		PRODUCTION DRAWING ONLY, TRANSFER CASE ASSEMBLY, G4, S2	REV 00

Oil Cooler Assembly

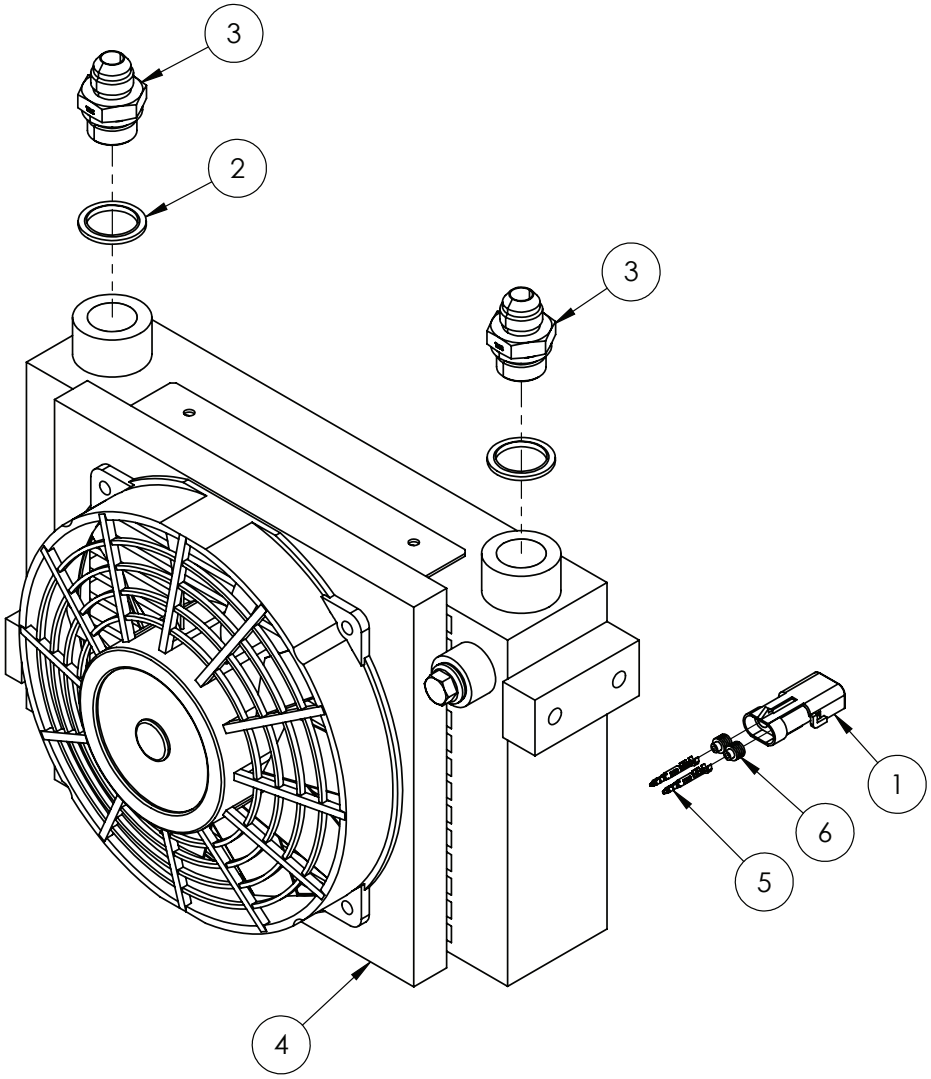

IF DESCRIPTION PREFIX IS ASSEMBLY DRAWING ONLY OR PRODUCTION DRAWING ONLY THE ITEM IS NOT FOR SALE			
ITEM	PART NUMBER	DESCRIPTION	QTY
1	GA5007381	FEMALE 2 PIN CONNECTOR	1
2	GA3500179	HYDRAULIC SEAL, M22, METAL BONDED	2
3	GA3500726	HYDRAULIC ADAPTOR, NIPPLE,3/4" JIC MALE X M22 X 1.5 MALE, M7L-2212	2
4	GA3500151	OIL COOLER, HYDRAULIC, TRANSFER CASE, G3V G4V	1
5	GA5016617	PIN, MALE, SEALED, WEATHER PACK, WIRE 1.0 - 2.0mm	2
6	GA5014857	SEAL FOR WEATHER PACK CONNECTORS (GREEN)	2
GA4952715 GOLDACRES		OIL COOLER ASSEMBLY, TRANSFER CASE, 4WD, G4 S2	REV 00

Battery Isolator Key & LED Indicator Mounting

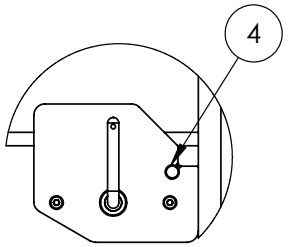

DETAIL B

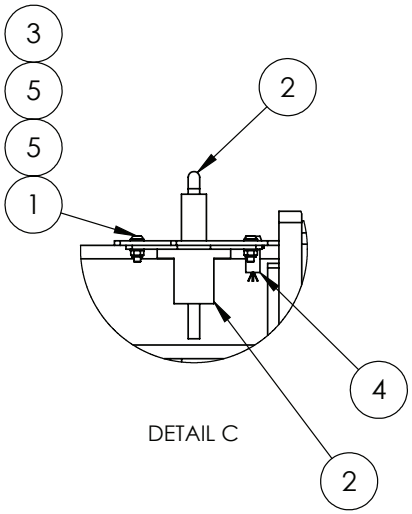

DETAIL C

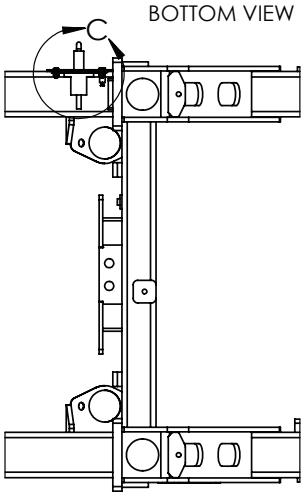

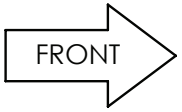

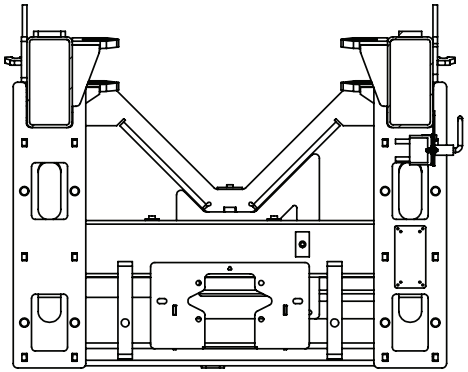

SECTION A-A

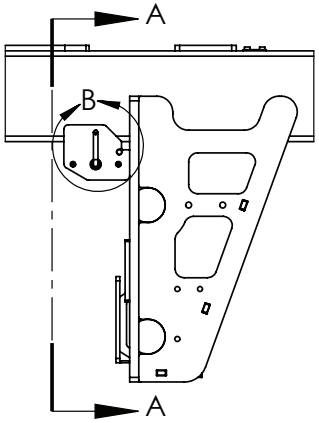

IF DESCRIPTION PREFIX IS ASSEMBLY DRAWING ONLY OR PRODUCTION DRAWING ONLY THE ITEM IS NOT FOR SALE			
ITEM	PART NUMBER	DESCRIPTION	QTY
1	GA5004053	BHCS M6 X 20 SS A2-70	2
2	GA5005787	BATTERY ISOLATOR SWITCH, LARGE WITH REMOVABLE KEY	1
3	GA5048115	NUT M6 NYLOC ZP	2
4	GA5013799	WARNING LIGHT, LED, RED	1
5	GA5004437	WASHER 6mm FLAT SS	4
GA7800190 GOLDACRES		ASSEMBLY DRAWING ONLY, LED INDICATOR, BATTERY ISOLATOR KEY MOUNTING, G4 S2, MY24	REV 00

Engine & Transmission, Chassis Mounting

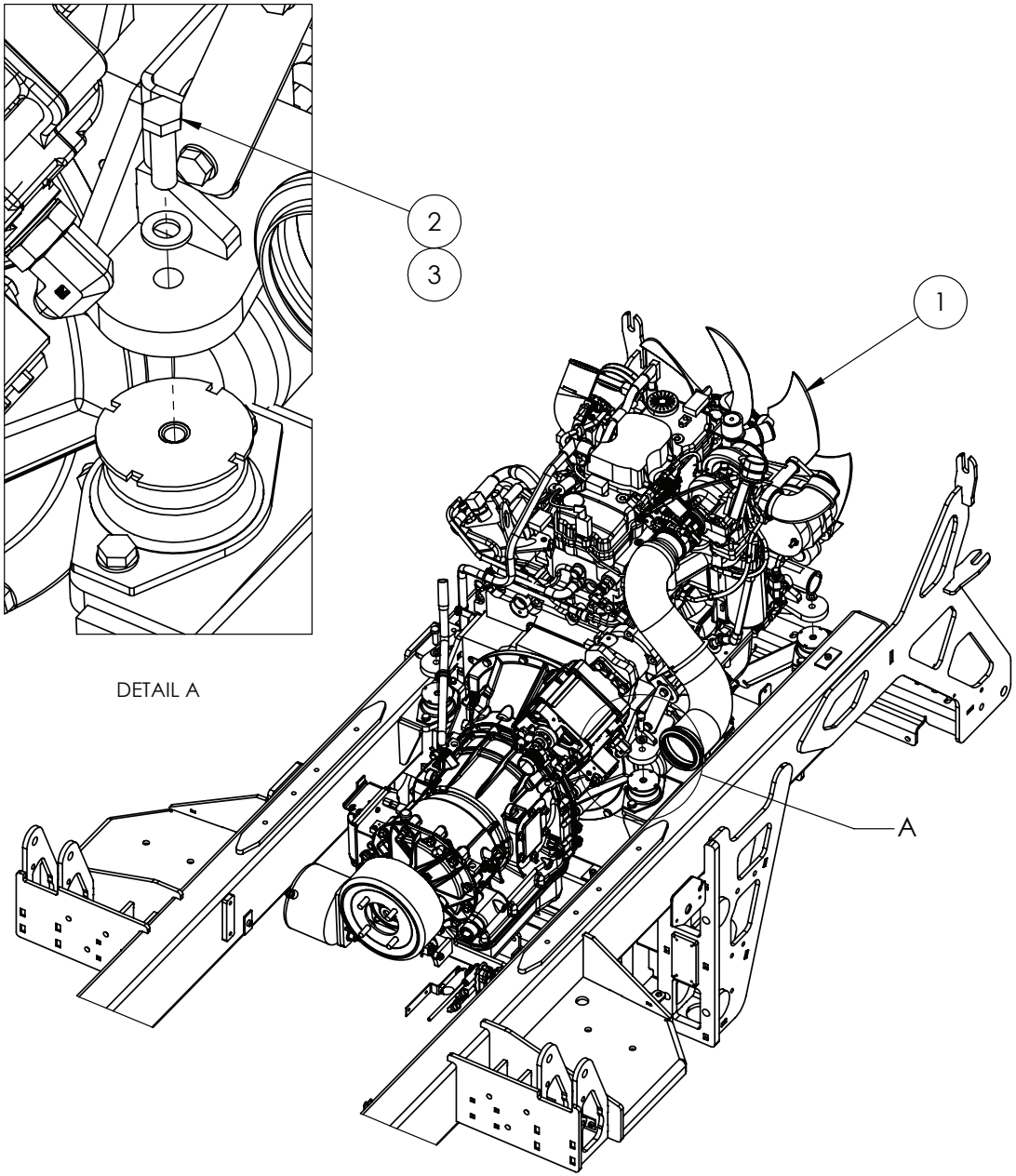

IF DESCRIPTION PREFIX IS ASSEMBLY DRAWING ONLY OR PRODUCTION DRAWING ONLY THE ITEM IS NOT FOR SALE			
ITEM	PART NUMBER	DESCRIPTION	QTY
1	GA6101790	ENGINE & TRANSMISSION ASSEMBLY, G4 S2, MY24	1
2	GA5000319	SET SCREW M12 X 40 GR8.8 ZP	4
3	GA5000577	WASHER 12mm FLAT SS HD	4
GA7800195 GOLDACRES		ASSEMBLY DRAWING ONLY, ENGINE, TRANSMISSION, CHASSIS MOUNT, G4 S2, MY24	REV 00

Engine Mounts

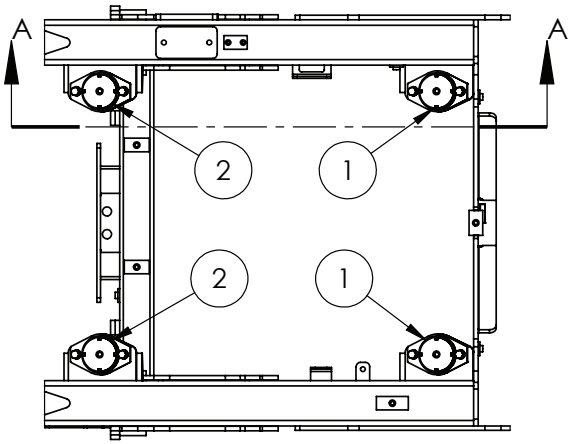

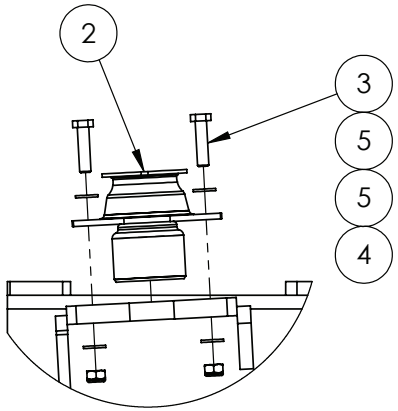

DETAIL B

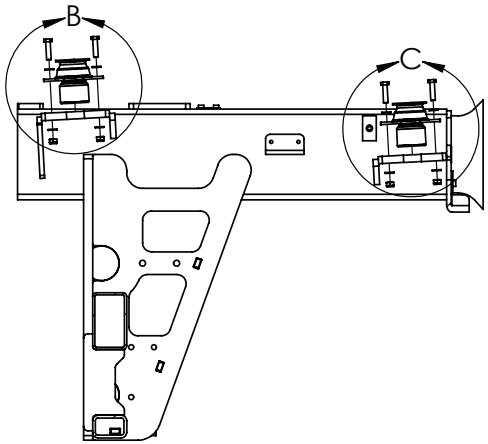

SECTION A-A

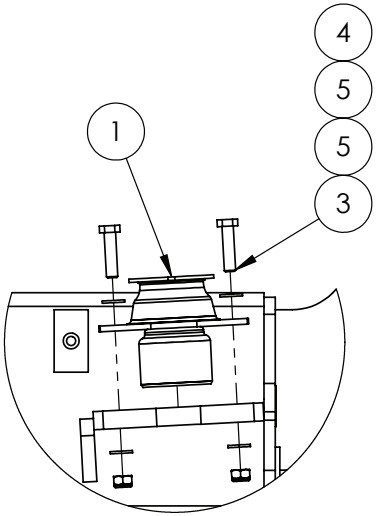

DETAIL C

IF DESCRIPTION PREFIX IS ASSEMBLY DRAWING ONLY OR PRODUCTION DRAWING ONLY THE ITEM IS NOT FOR SALE			
ITEM	PART NUMBER	DESCRIPTION	QTY
1	GA5078826	ANTI VIBRATION MOUNT , HYDRAULIC CONE, HS MEDIUM, 50 SHORE, 177046	2
2	GA5078825	ANTI VIBRATION MOUNT , HYDRAULIC CONE, HS MEDIUM, 60 SHORE, 177047	2
3	GA5006055	BOLT M10 X 40 GR8.8 ZP	8
4	GA5000141	NUT M10 NYLOC ZP	8
5	GA5000117	WASHER 10mm FLAT SS HD	16
GA7800191 GOLDACRES		ASSEMBLY DRAWING ONLY, ENGINE MOUNTS, CHASSIS MOUNT, G4 S2, MY24	REV 00

Hydraulic Reservoir Chassis Mounting

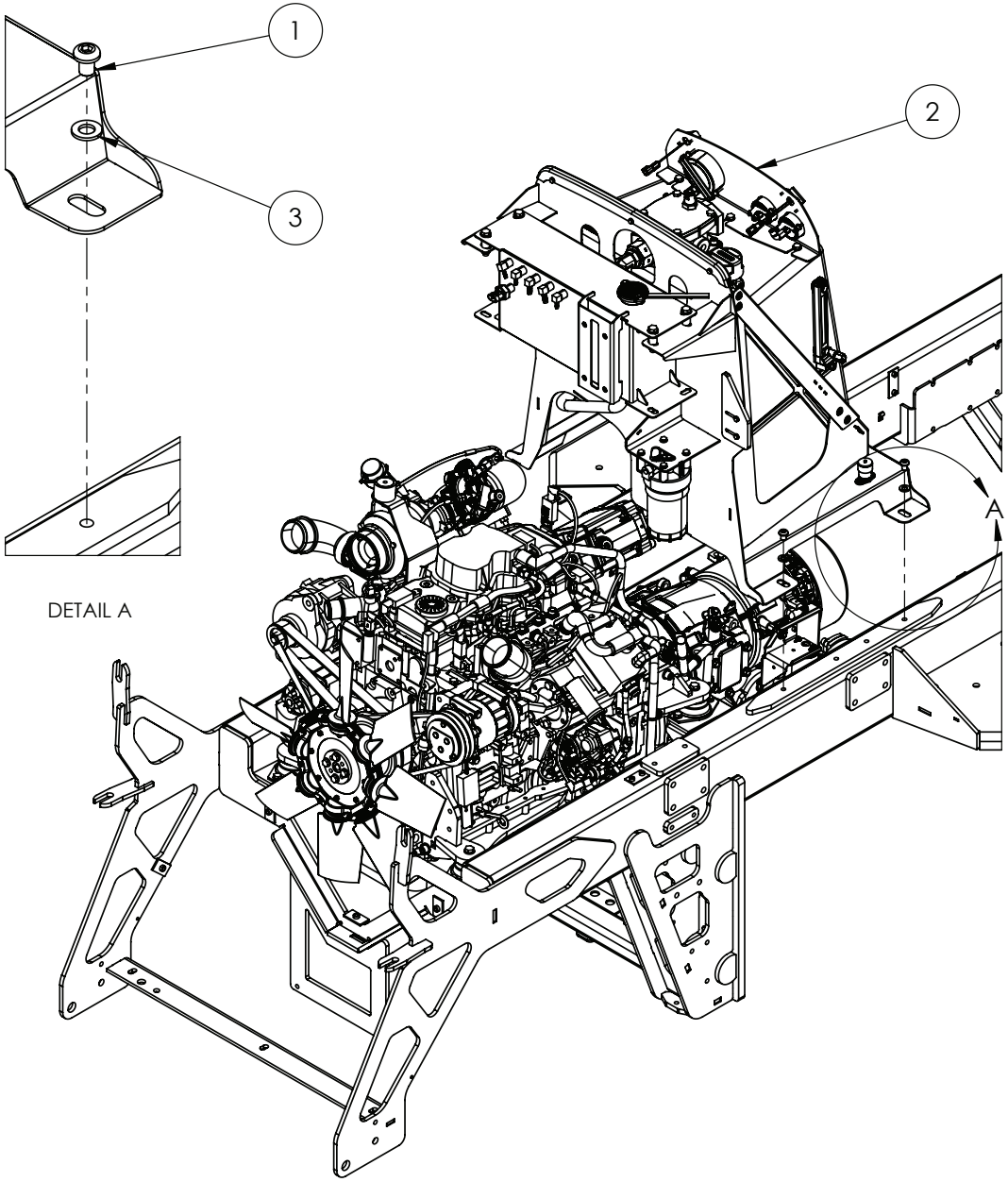

IF DESCRIPTION PREFIX IS ASSEMBLY DRAWING ONLY OR PRODUCTION DRAWING ONLY THE ITEM IS NOT FOR SALE			
ITEM	PART NUMBER	DESCRIPTION	QTY
1	GA5069890	BHCS M12 X 16 GR12.9 ZP	4
2	GA6101300	HYDRAULIC OIL RESERVOIR ASSEMBLY, G4 MY24	1
3	GA5000577	WASHER 12mm FLAT SS HD	4
GA7800199 GOLDACRES		ASSEMBLY DRAWING ONLY, HYDRAULIC RESERVOIR, CHASSIS MOUNT, G4 S2, MY24	REV 00.B

Primary Fuel Filter Mounting

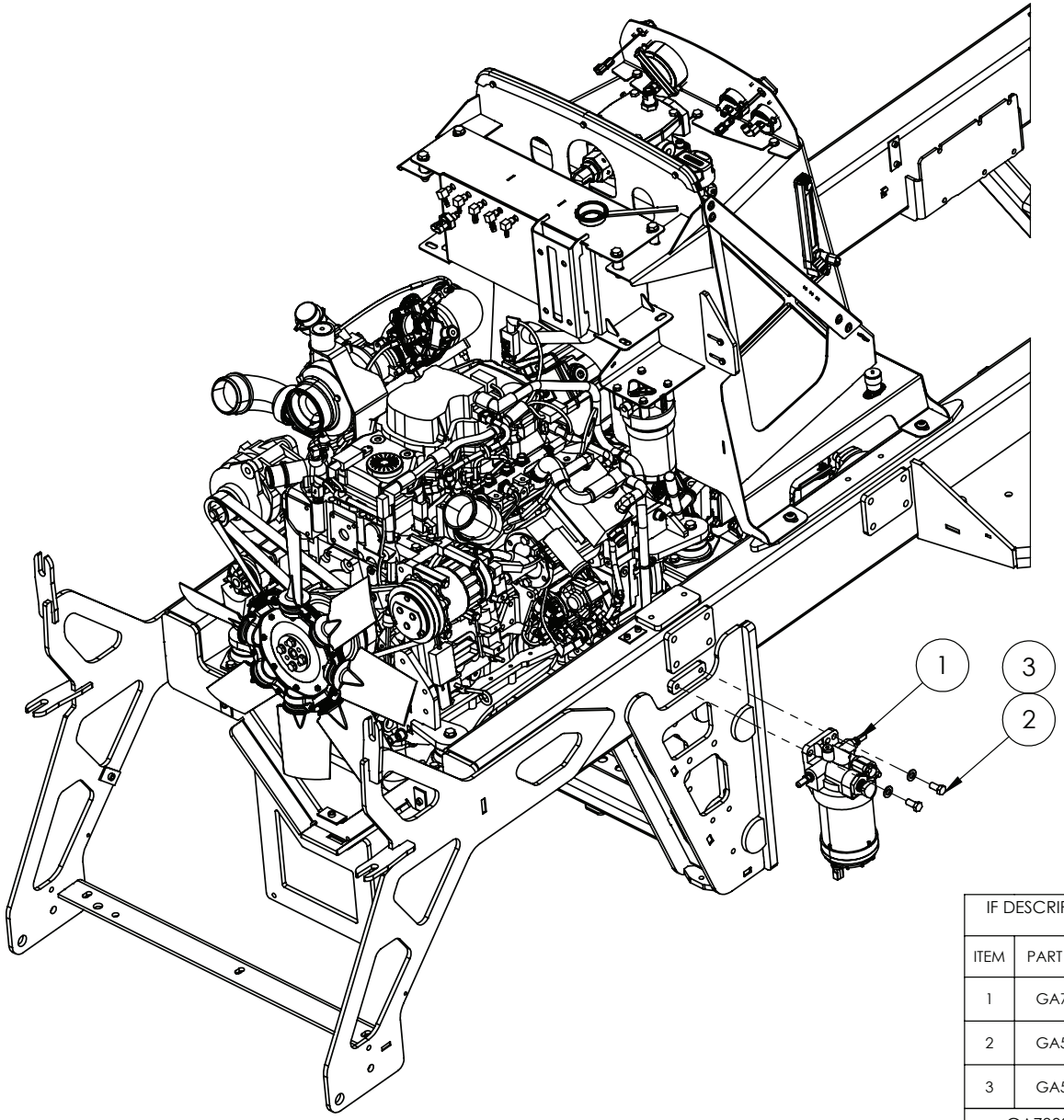

IF DESCRIPTION PREFIX IS ASSEMBLY DRAWING ONLY OR PRODUCTION DRAWING ONLY THE ITEM IS NOT FOR SALE			
ITEM	PART NUMBER	DESCRIPTION	QTY
1	GA7800428	ASSEMBLY DRAWING ONLY, PRIMARY FUEL FILTER, G4, SERIES 2	1
2	GA5011229	BOLT M12 X 25 GR8.8 ZP	2
3	GA5000577	WASHER 12mm FLAT SS HD	2
GA7800427 GOLDACRES		PRIMARY FUEL FILTER MOUNTING, G4, SERIES 2	REV 00

Primary Fuel Filter Assembly

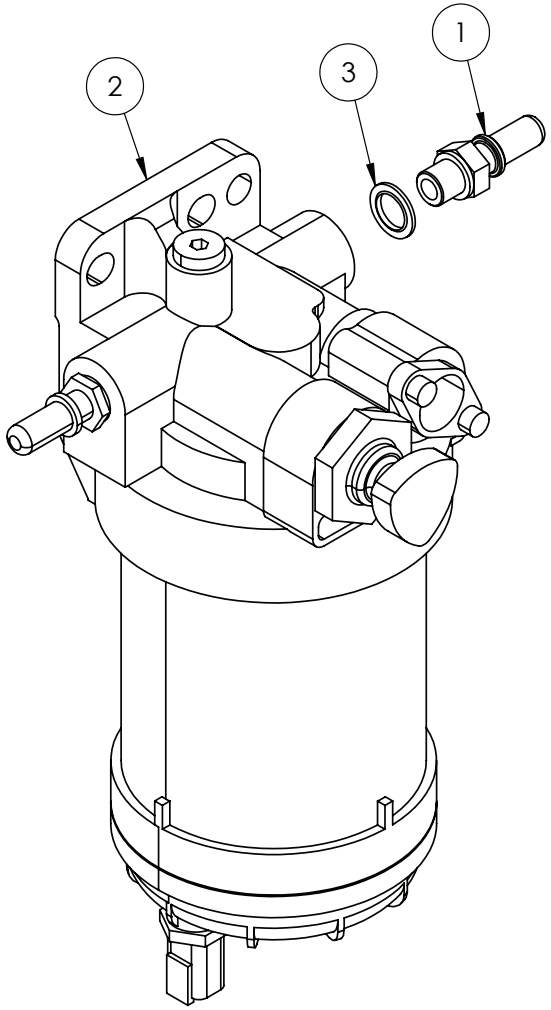

IF DESCRIPTION PREFIX IS ASSEMBLY DRAWING ONLY OR PRODUCTION DRAWING ONLY THE ITEM IS NOT FOR SALE			
ITEM	PART NUMBER	DESCRIPTION	QTY
1	GA5078829	BRASS FITTING, PUSH-TO-CONNECT, STRAIGHT, 1/2 MALE SAE J2044 TO M14 MALE	1
2	GA2700190	FUEL FILTER, COMPLETE, CUMMINS, B4.5L, FS90137	1
3	GA3500130	HYDRAULIC ADAPTOR, SEAL, METAL BONDED, SUIT M14 MALE THREAD, MBD-14, RYCO	1
GA7800428 GOLDACRES		ASSEMBLY DRAWING ONLY, PRIMARY FUEL FILTER, G4, SERIES 2	REV 00

Air Conditioning Condenser, Chassis Mounting

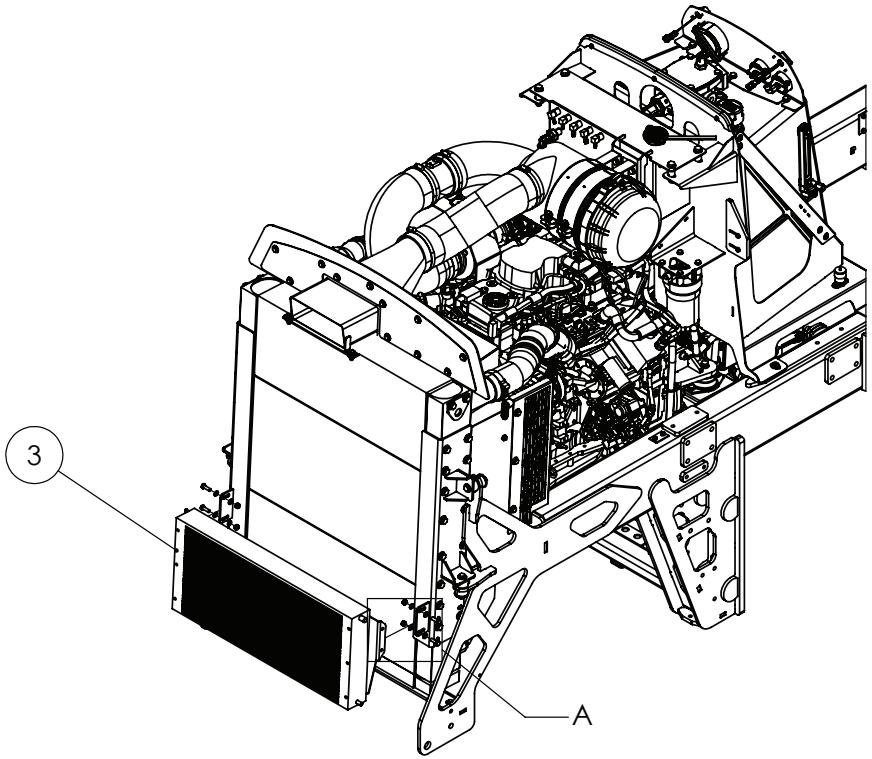

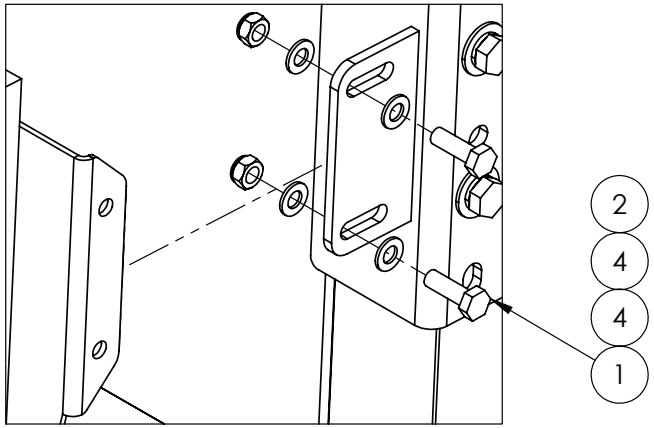

DETAIL A

IF DESCRIPTION PREFIX IS ASSEMBLY DRAWING ONLY OR PRODUCTION DRAWING ONLY THE ITEM IS NOT FOR SALE			
ITEM	PART NUMBER	DESCRIPTION	QTY
1	GA5004711	BOLT M8 X 25 GR8.8 ZP	4
2	GA5004917	NUT M8 NYLOC ZP	4
3	GA4906685	PRODUCTION DRAWING ONLY. CONDENSER ASSEMBLY, AIR CONDITIONER, G4 S2, MY24	1
4	GA5003643	WASHER 8mm FLAT SS HD	8
GA7800214 GOLDACRES		ASSEMBLY DRAWING ONLY, AC CONDENSER, CHASSIS MOUNT, G4 S2, MY24	REV 00

Combination Cooler, Chassis Mounting

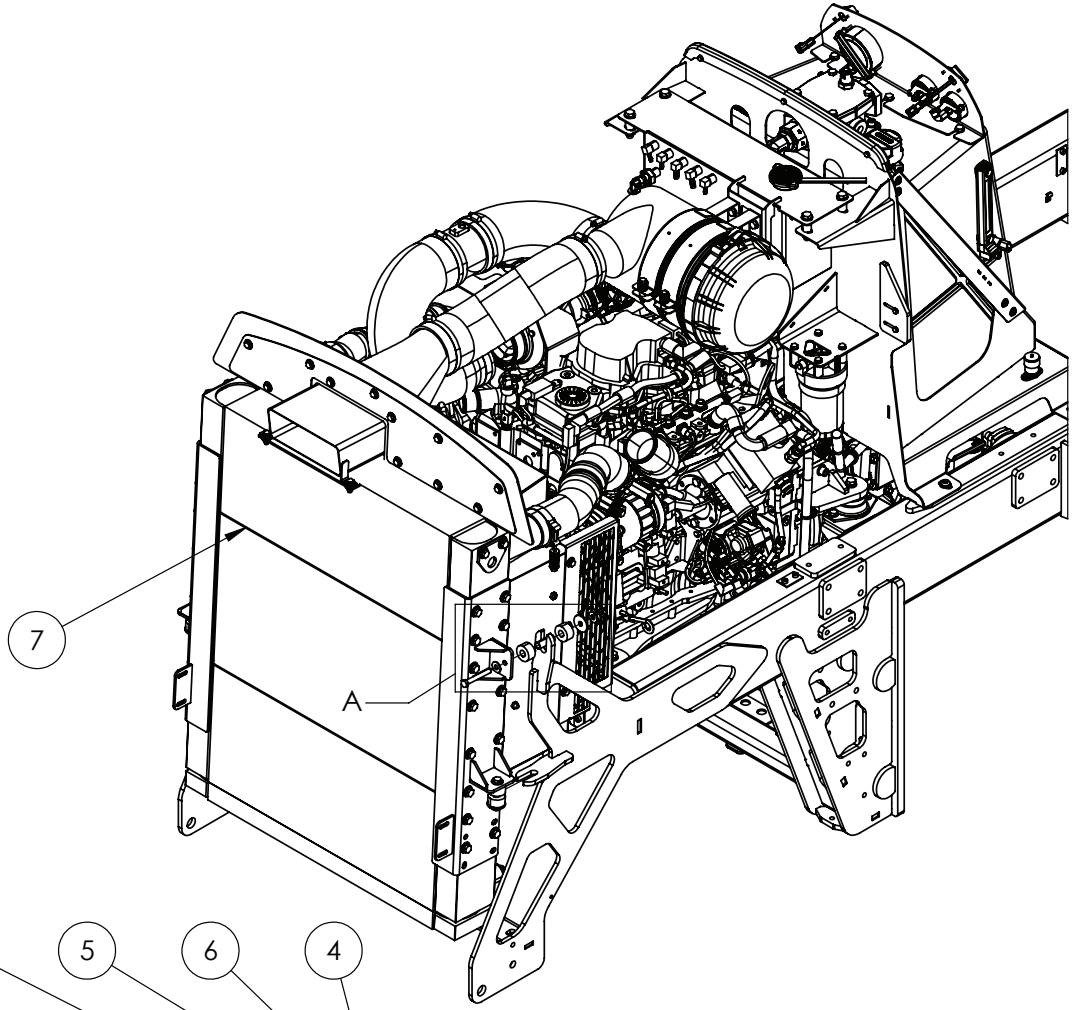

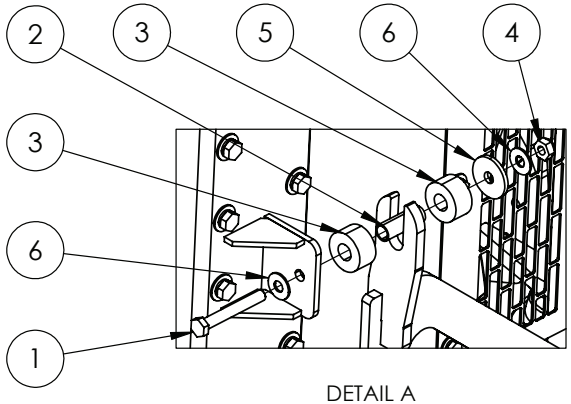

DETAIL A

IF DESCRIPTION PREFIX IS ASSEMBLY DRAWING ONLY OR PRODUCTION DRAWING ONLY THE ITEM IS NOT FOR SALE			
ITEM	PART NUMBER	DESCRIPTION	QTY
1	GA5006073	BOLT M10 X 75 GR8.8 ZP	4
2	GA5078948	COMBINATION COOLER, CRUSH TUBE, PA-130304-54, G4 S2	4
3	GA5078946	COMBINATION COOLER, ISOLATOR RUBBER, PA-130304-29, G4 S2	8
4	GA5078970	COMBINATION COOLER, NUT, NYLOC M10 ZP, M10-8.8-ZP-HHNN, G4 S2	4
5	GA5078963	COMBINATION COOLER, WASHER, ISOLATOR, PA-130304-53, G4 S2	4
6	GA5078969	COMBINATION COOLER, WASHER, PLAIN LARGE 10mm, 10-BS-ZP-FW, G4 S2	8
7	GA2700145	ENGINE, COOLER/RADIATOR, COMBINATIONAL, KIT, G4, S2	1
GA7800213 GOLDACRES		ASSEMBLY DRAWING ONLY, COMBI COOLER, CHASSIS MOUNT, G4 S2, MY24	REV 00

Ride Height Control Valve Mounting, Rear Axle

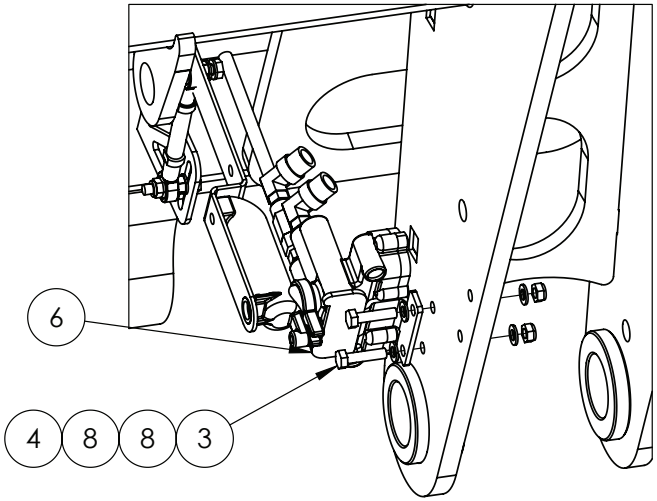

DETAIL A RIGHT HAND SIDE

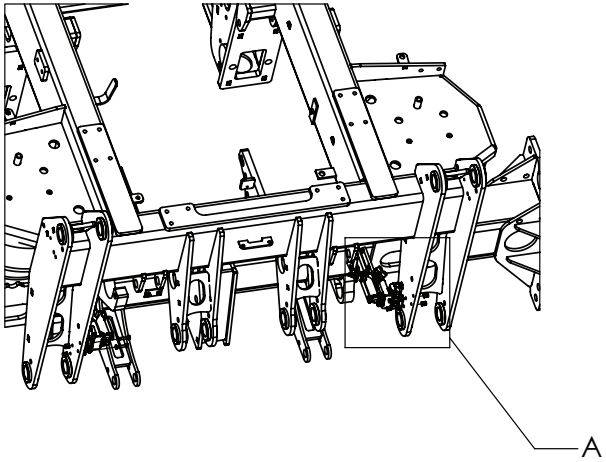

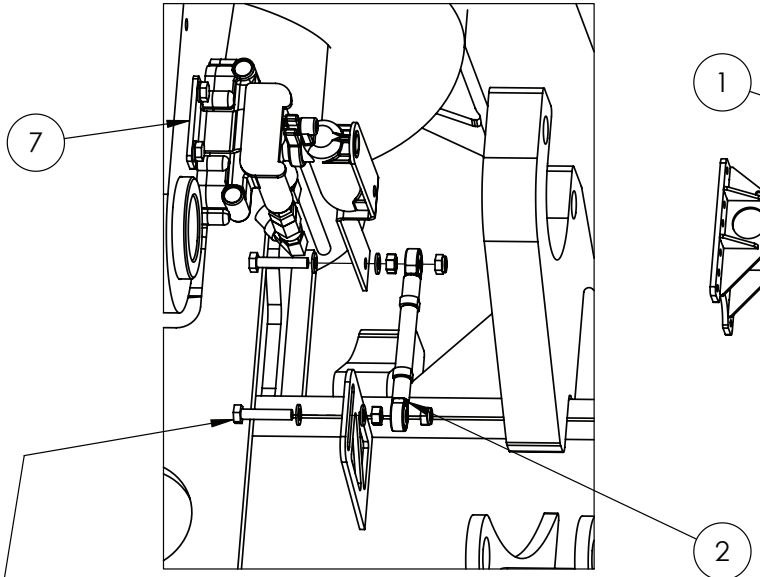

DETAIL B LEFT HAND SIDE

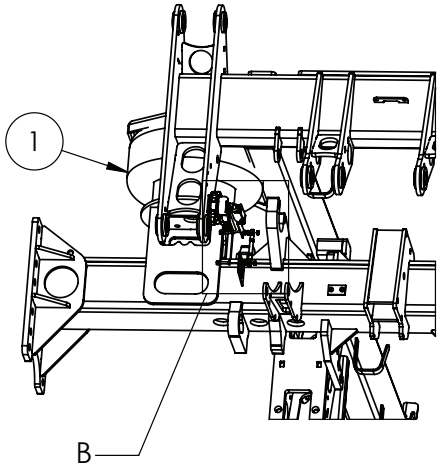

3 8 8 5 4

IF DESCRIPTION PREFIX IS ASSEMBLY DRAWING ONLY OR PRODUCTION DRAWING ONLY THE ITEM IS NOT FOR SALE			
ITEM	PART NUMBER	DESCRIPTION	QTY
1	GA5005311	AIR SPRING HT230 SINGLE AIR STUD	2
2	GA4909410	ASSEMBLY DRAWING ONLY RIDE HEIGHT LINK, SHORT	2
3	GA5004077	BOLT M6 X 30 GR8.8 ZP	8
4	GA5048115	NUT M6 NYLOC ZP	8
5	GA5004397	NUT M6 ZP	4
6	GA4949460	RIDE HEIGHT CONTROL VALVE, ASSEMBLY, G6 MY20	1
7	GA4949465	RIDE HEIGHT CONTROL VALVE, ASSEMBLY, REAR LEFT, G6 MY20	1
8	GA5004437	WASHER 6mm FLAT SS	16
GA7800194 GOLDACRES		ASSEMBLY DRAWING ONLY, REAR AXLE, RIDE HEIGHT CONTROL VALVES & RIDE HEIGHT LINKS MOUNTING, G4 S2, MY24	REV 00

Ride Height Control Valve Assembly, Rear, RH

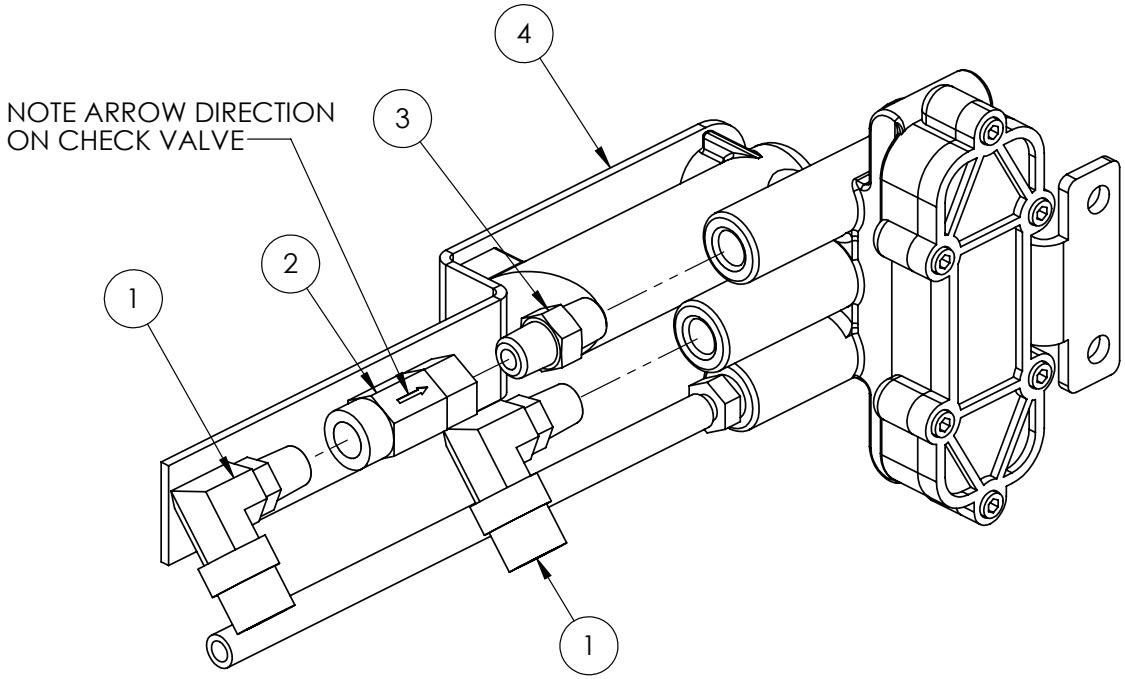

IF DESCRIPTION PREFIX IS ASSEMBLY DRAWING ONLY OR PRODUCTION DRAWING ONLY THE ITEM IS NOT FOR SALE			
ITEM	PART NUMBER	DESCRIPTION	QTY
1	GA5078525	AIR FITTING, ELBOW, SWIVEL, 3/8" TUBE, 1/8" NPT MALE, PUSH IN, BRASS, ALKON - AQ69-DOTS-6X2	2
2	GA5018147	CHECK VALVE INLINE 1/8" NPT FEMALE	1
3	GA5025395	PNEUMATIC ADAPTOR, NIPPLE, 1/8" NPT MALE X 1/8" NPT MALE	1
4	GA2500003	RIDE HEIGHT VALVE, HALDEX 9054007	1
GA4949460 GOLDACRES		RIDE HEIGHT CONTROL VALVE, ASSEMBLY, REAR RIGHT, G6 MY20	REV 00

Ride Height Control Valve Assembly, Rear, LH

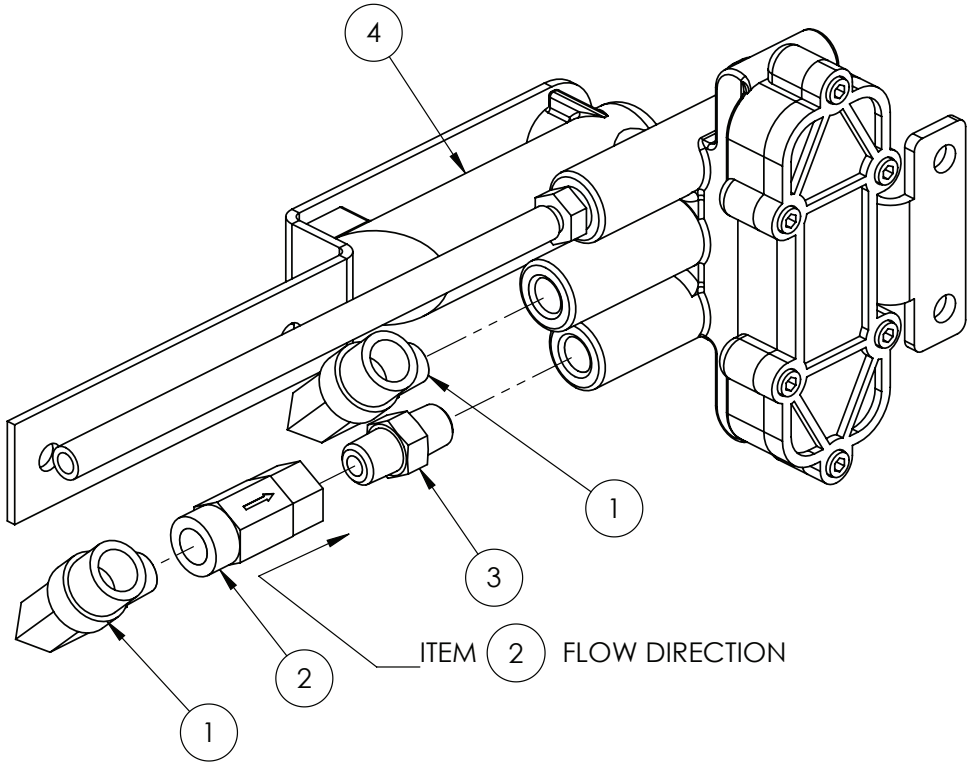

IF DESCRIPTION PREFIX IS ASSEMBLY DRAWING ONLY OR PRODUCTION DRAWING ONLY THE ITEM IS NOT FOR SALE			
ITEM	PART NUMBER	DESCRIPTION	QTY
1	GA5078525	AIR FITTING, ELBOW, SWIVEL, 3/8" TUBE, 1/8" NPT MALE, PUSH IN, BRASS, ALKON - AQ69-DOTS-6X2	2
2	GA5018147	CHECK VALVE INLINE 1/8" NPT FEMALE	1
3	GA5025395	PNEUMATIC ADAPTOR, NIPPLE, 1/8" NPT MALE X 1/8" NPT MALE	1
4	GA2500003	RIDE HEIGHT VALVE, HALDEX 9054007	1
GA4949465 GOLDACRES		RIDE HEIGHT CONTROL VALVE, ASSEMBLY, REAR LEFT, G6 MY20	REV 00.B

Ride Height Link, Front Axle (Short)

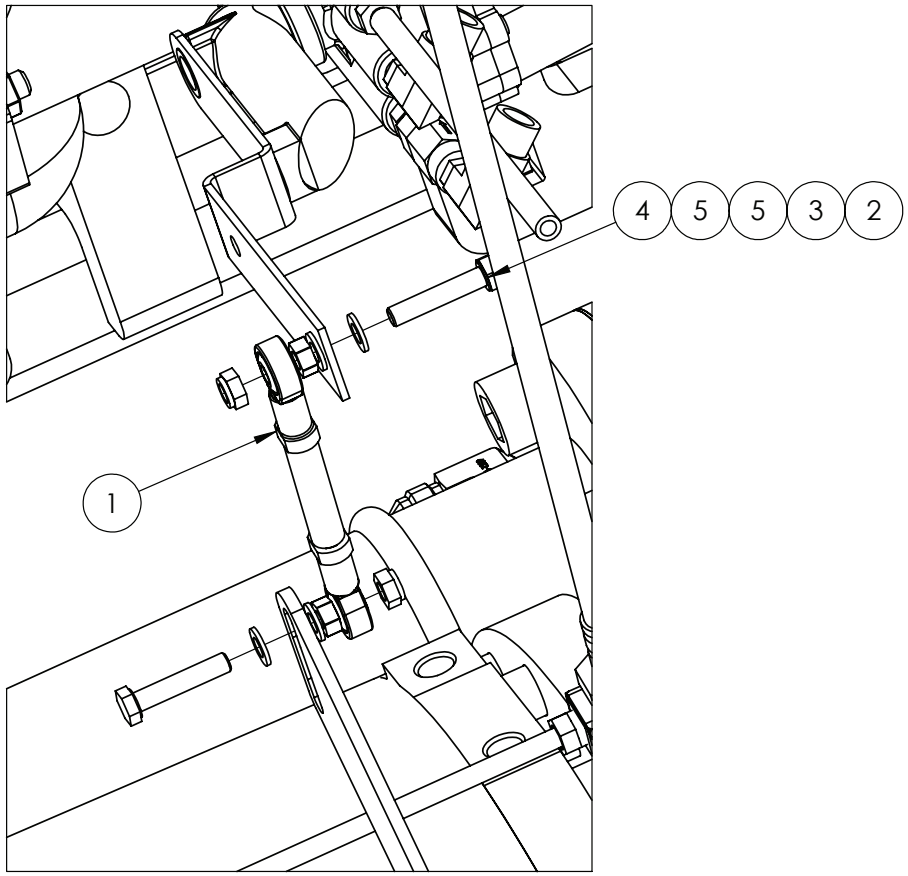

DETAIL A

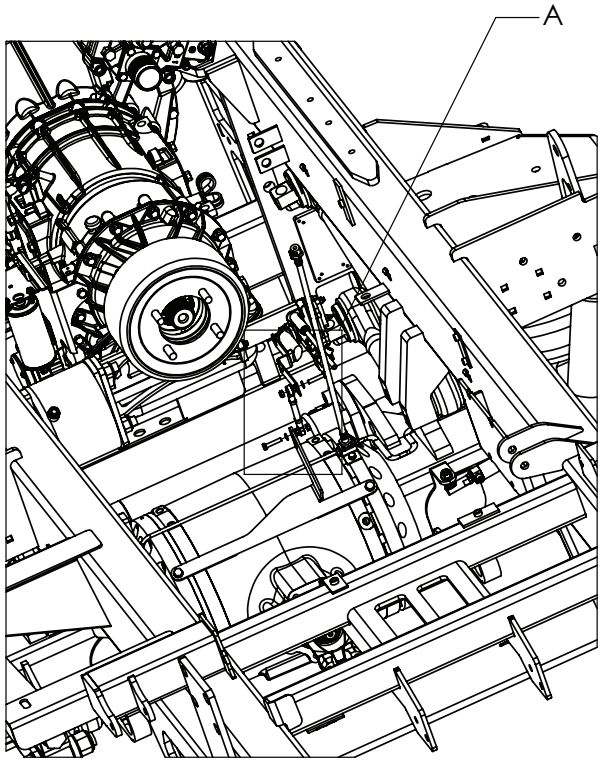

IF DESCRIPTION PREFIX IS ASSEMBLY DRAWING ONLY OR PRODUCTION DRAWING ONLY THE ITEM IS NOT FOR SALE			
ITEM	PART NUMBER	DESCRIPTION	QTY
1	GA4909410	ASSEMBLY DRAWING ONLY RIDE HEIGHT LINK, SHORT	1
2	GA5048115	NUT M6 NYLOC ZP	2
3	GA5004397	NUT M6 ZP	2
4	GA5004079	SET SCREW M6 X 30 GR8.8 ZP	2
5	GA5004437	WASHER 6mm FLAT SS	4
GA7800196 GOLDACRES		ASSEMBLY DRAWING ONLY, FRONT AXLE, CHASSIS MOUNT, RIDE HEIGHT LINK, G4 S2, MY24	REV 00

Ride Height Link, Short

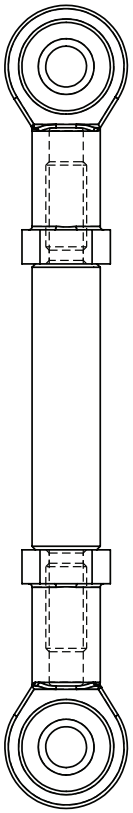

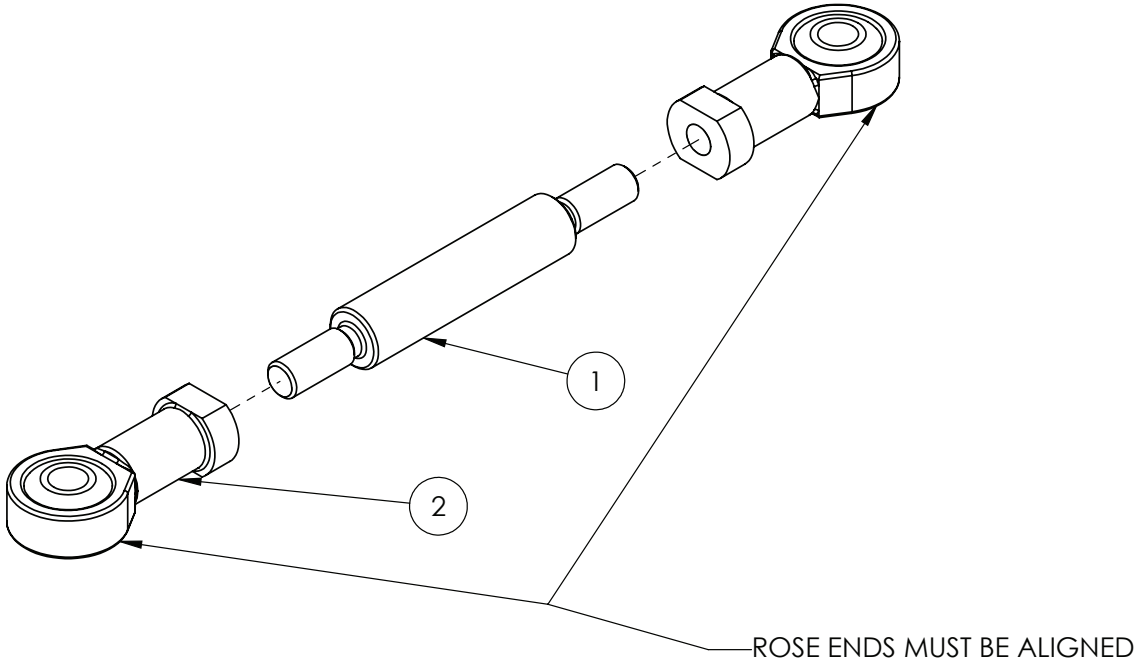

IF DESCRIPTION PREFIX IS ASSEMBLY DRAWING ONLY OR PRODUCTION DRAWING ONLY THE ITEM IS NOT FOR SALE			
ITEM	PART NUMBER	DESCRIPTION	QTY
1	GA4551275	LINK ROD, RIDE HEIGHT, G6, MY20	1
2	GA5052725	ROD END 6mm FEMALE	2
GA4909410 GOLDACRES		ASSEMBLY DRAWING ONLY RIDE HEIGHT LINK, SHORT	REV 00

Ride Height Link, Front Axle (Long)

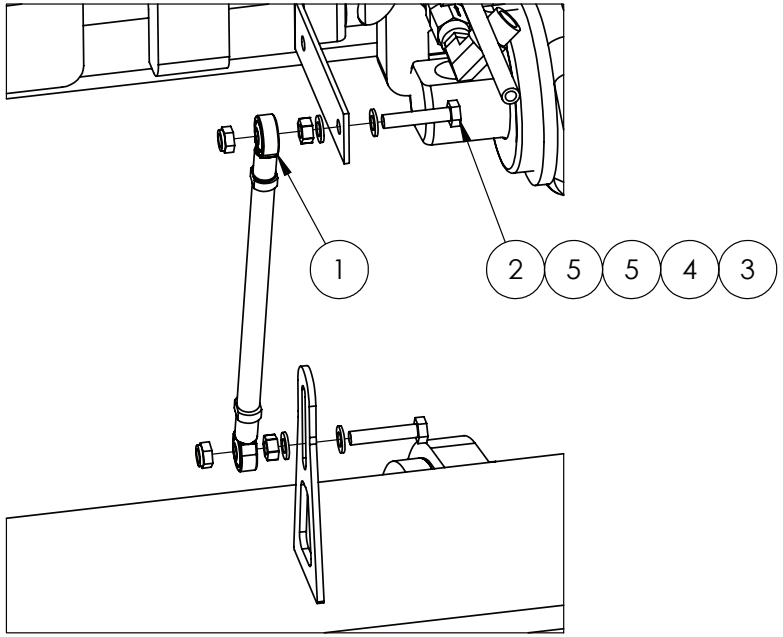

DETAIL A

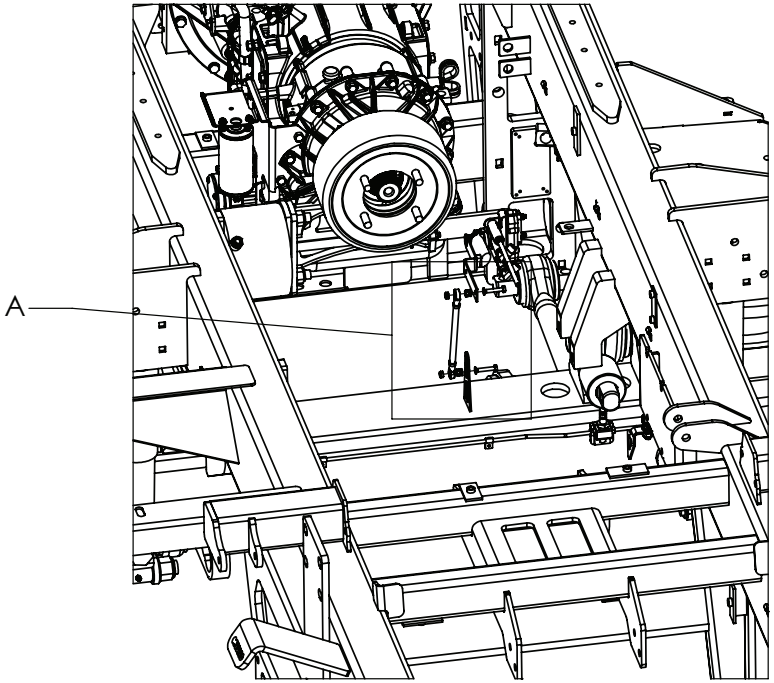

IF DESCRIPTION PREFIX IS ASSEMBLY DRAWING ONLY OR PRODUCTION DRAWING ONLY THE ITEM IS NOT FOR SALE			
ITEM	PART NUMBER	DESCRIPTION	QTY
1	GA4909415	ASSEMBLY DRAWING ONLY RIDE HEIGHT LINK 2WD FRONT	1
2	GA5004077	BOLT M6 X 30 GR8.8 ZP	2
3	GA5048115	NUT M6 NYLOC ZP	2
4	GA5004397	NUT M6 ZP	2
5	GA5004437	WASHER 6mm FLAT SS	4
GA7800198 GOLDACRES		ASSEMBLY DRAWING ONLY, FRONT AXLE, CHASSIS MOUNT, RIDE HEIGHT LINK, 2WD G4 S2, MY24	REV 00

Ride Height Link, Long

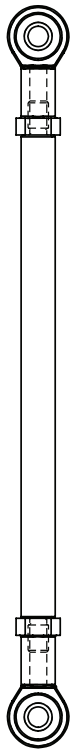

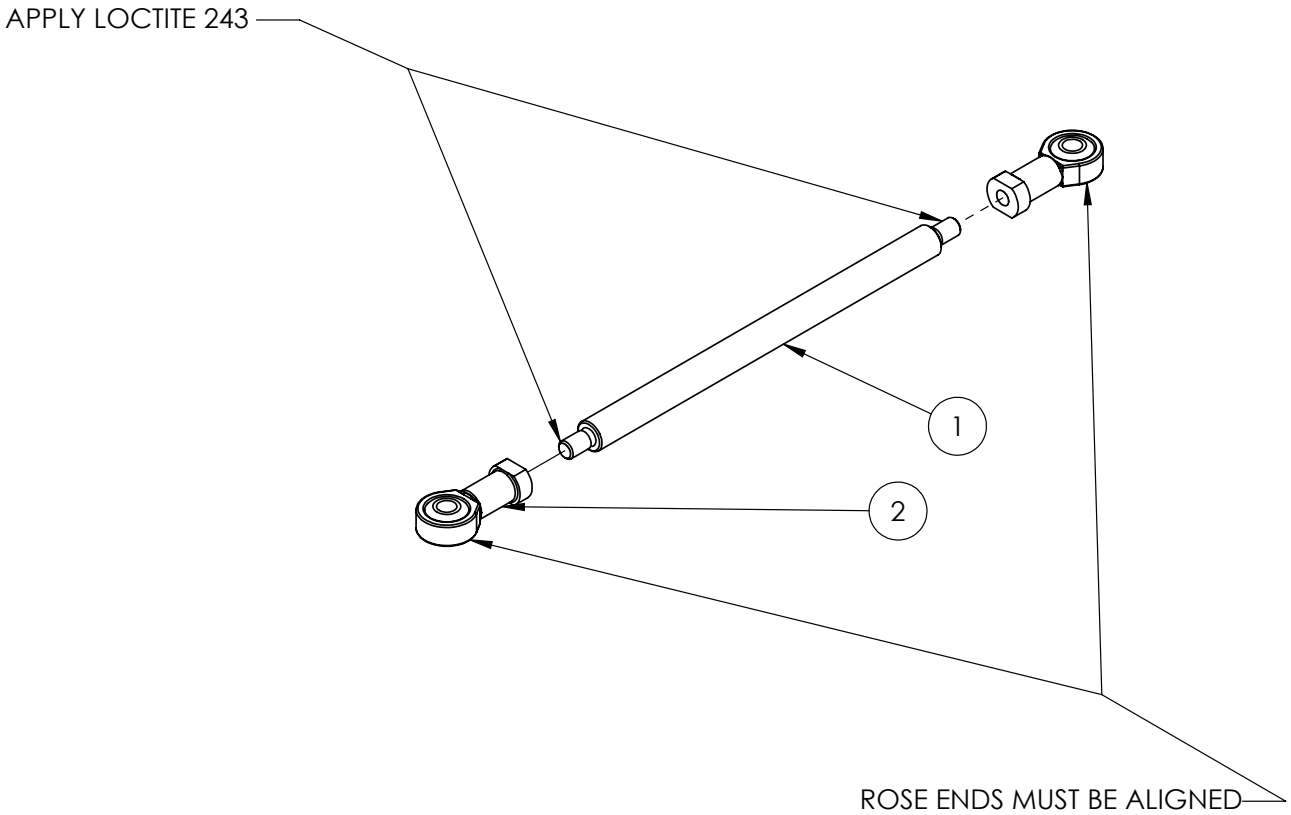

IF DESCRIPTION PREFIX IS ASSEMBLY DRAWING ONLY OR PRODUCTION DRAWING ONLY THE ITEM IS NOT FOR SALE			
ITEM	PART NUMBER	DESCRIPTION	QTY
1	GA4583650	LINK ROD, STEER ANGLE SENSOR, ADJUSTABLE AXLE, 2-3m, G4 S2	1
2	GA5052725	ROD END 6mm FEMALE	2
GA4909415 GOLDACRES		ASSEMBLY DRAWING ONLY RIDE HEIGHT LINK 2WD FRONT	REV 00

Air Bag Dump

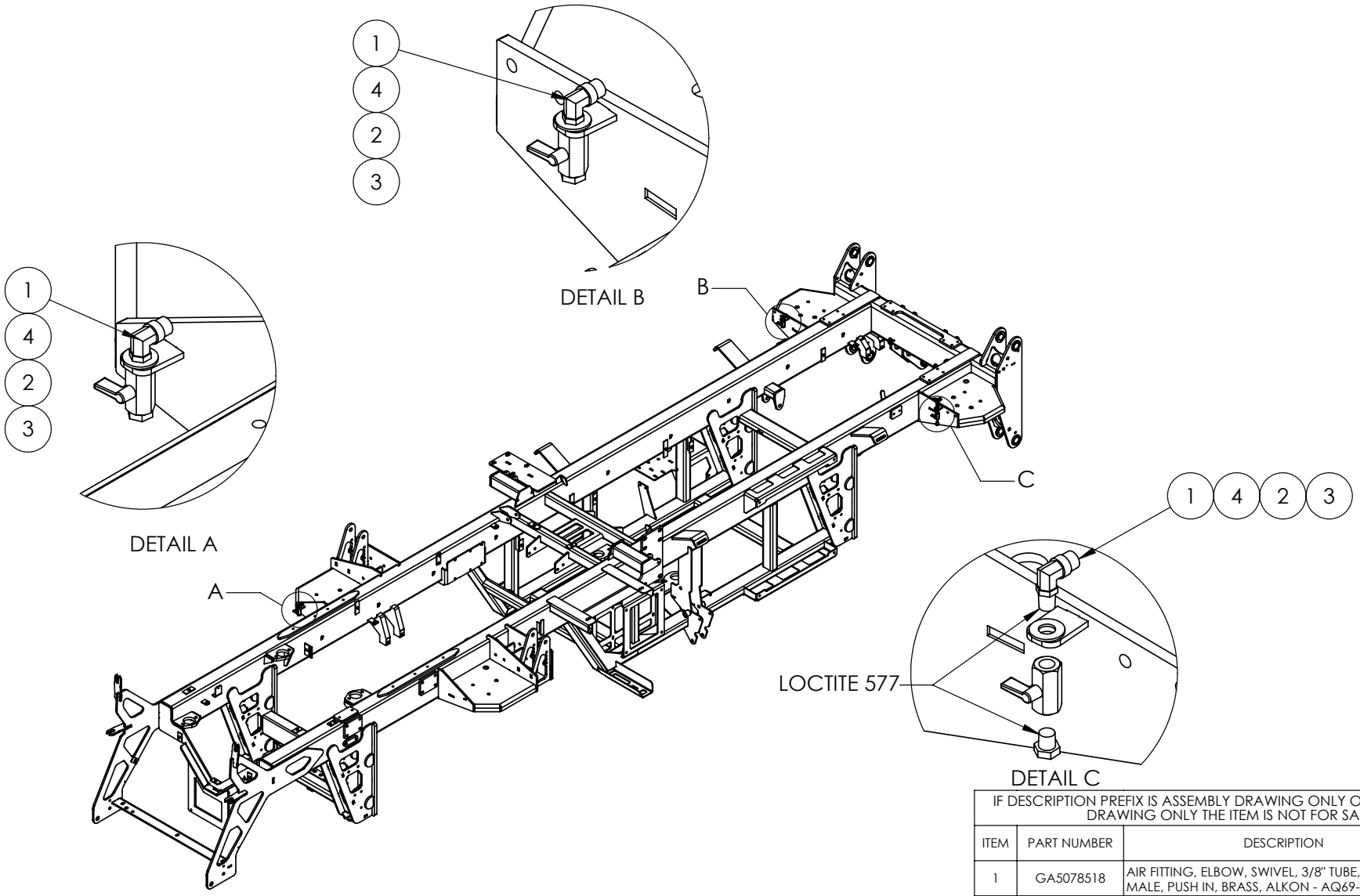

IF DESCRIPTION PREFIX IS ASSEMBLY DRAWING ONLY OR PRODUCTION DRAWING ONLY THE ITEM IS NOT FOR SALE			
ITEM	PART NUMBER	DESCRIPTION	QTY
1	GA5078518	AIR FITTING, ELBOW, SWIVEL, 3/8" TUBE, 1/4" NPT MALE, PUSH IN, BRASS, ALKON - AQ69-DOTS-6X4	3
2	GA5045140	BALL VALVE, 1/4" FEMALE, BLACK LEVER HANDLE, CHROMED	3
3	GA5071207	BREATHER, SILENCER, 1/4 BUTTON	3
4	GA5017673	WASHER 1/2" HIGH TENSILE	3
GA7800197 GOLDACRES		ASSEMBLY DRAWING ONLY, AIR BAG DUMP, DROPLEG BREATHER MOUNTING, G4 S2, MY24	REV 00

Air Cleaner Mounting

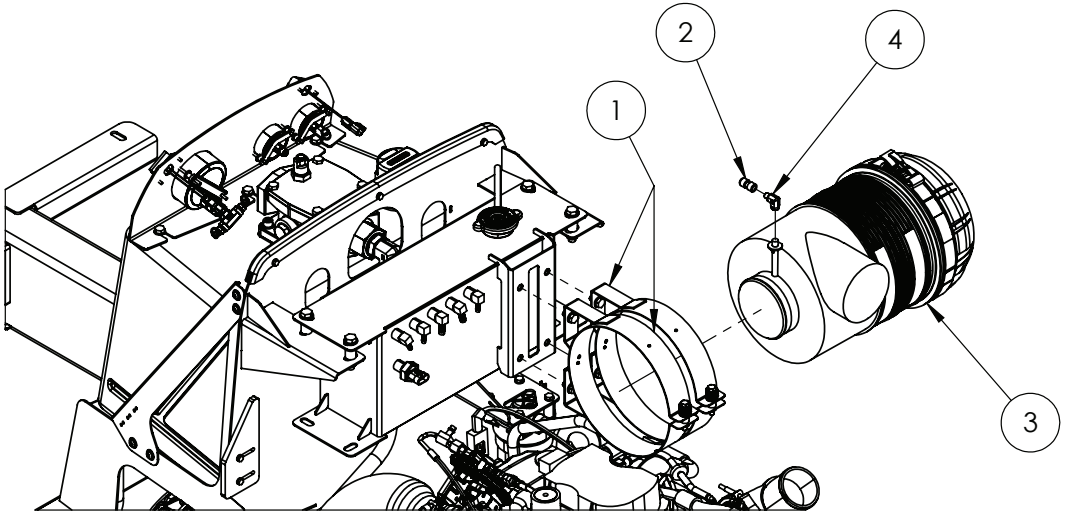

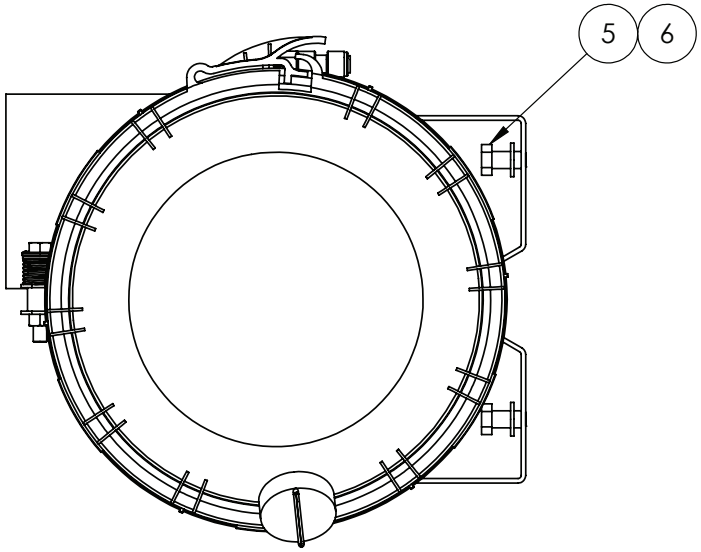

IF DESCRIPTION PREFIX IS ASSEMBLY DRAWING ONLY OR PRODUCTION DRAWING ONLY THE ITEM IS NOT FOR SALE			
ITEM	PART NUMBER	DESCRIPTION	QTY
1	GA5025840	BRACKET, MOUNT, AIR FILTER, FLEETGUARD, 3946456s	2
2	GA5070450	FEMALE ADAPTOR PUSH IN 6mm X 1/8 BSP	1
3	GA5025835	HOUSING, AIR FILTER, FLEETGUARD, AH19479	1
4	GA3500208	HYDRAULIC ADAPTOR, ELBOW, 90 DEGREE, 1/8" BSPT MALE X 1/8" BSPT FEMALE	1
5	GA5006113	SET SCREW M10 X 20 GR8.8 ZP	4
6	GA5000117	WASHER 10mm FLAT SS HD	4
GA7800200 GOLDACRES		ASSEMBLY DRAWING ONLY, AIR CLEANER, CHASSIS MOUNT, G4 S2, MY24	REV 00.B

Fuel Tank Mounting

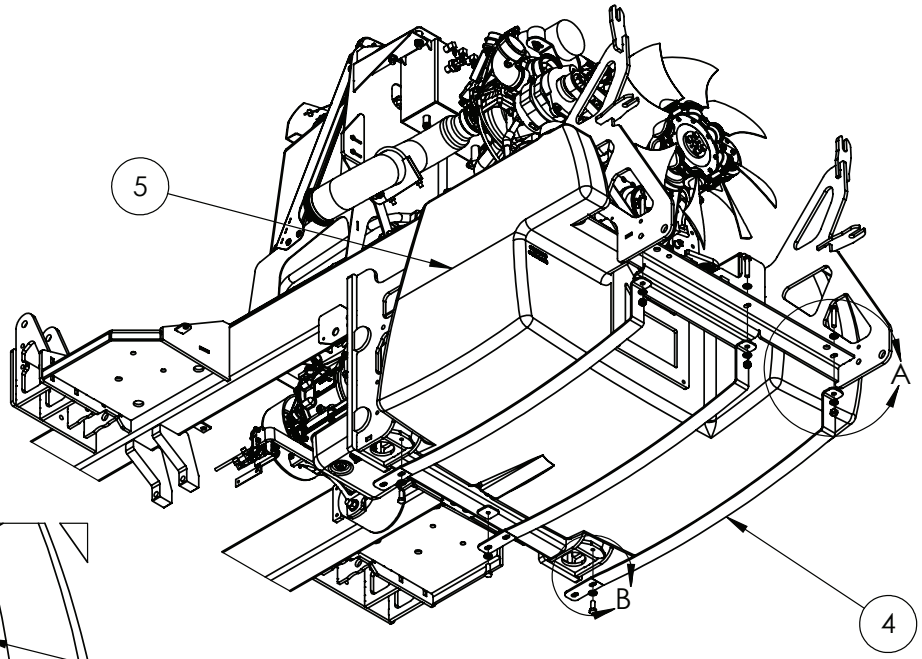

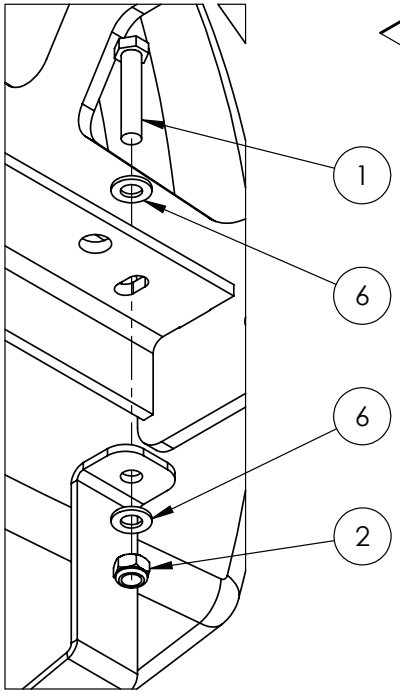

DETAIL A

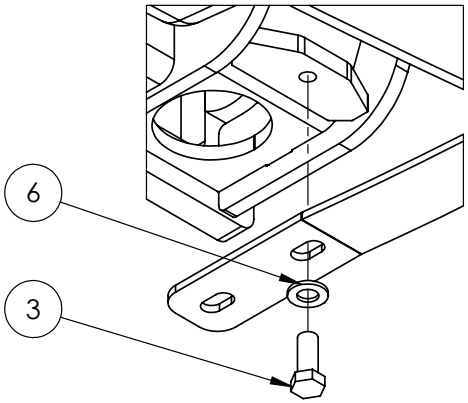

DETAIL B

IF DESCRIPTION PREFIX IS ASSEMBLY DRAWING ONLY OR PRODUCTION DRAWING ONLY THE ITEM IS NOT FOR SALE			
ITEM	PART NUMBER	DESCRIPTION	QTY
1	GA5000335	BOLT M12 X 60 GR8.8 ZP	3
2	GA5012461	NUT M12 NYLOC ZP	3
3	GA5000305	SET SCREW M12 X 30 GR8.8 ZP	3
4	GA4413240	STRAP, FUEL TANK, G4, S2	3
5	GA8500046	TANK, FUEL, G4, S2	1
6	GA5000577	WASHER 12mm FLAT SS HD	9
GA7800204 GOLDACRES		ASSEMBLY DRAWING ONLY, FUEL TANK, CHASSIS MOUNT, G4 S2, MY24	REV 00

Fuel Tank Assembly

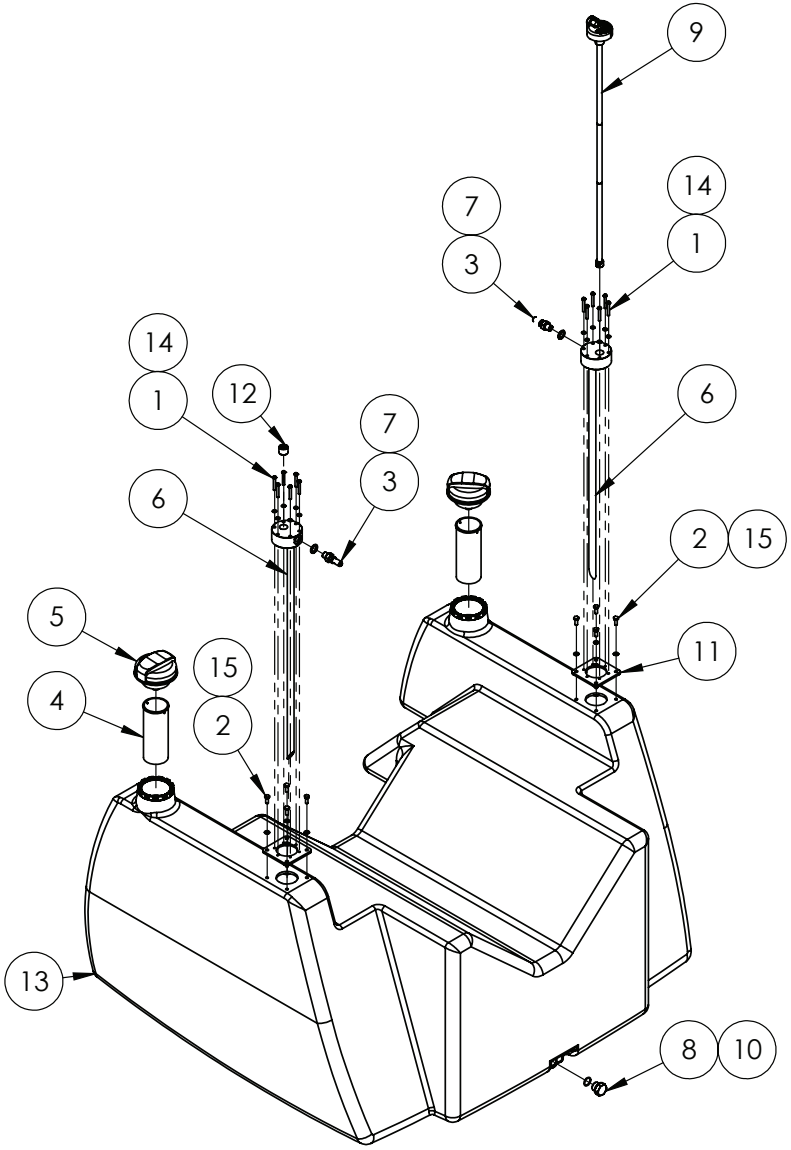

IF DESCRIPTION PREFIX IS ASSEMBLY DRAWING ONLY OR PRODUCTION DRAWING ONLY THE ITEM IS NOT FOR SALE			
ITEM	PART NUMBER	DESCRIPTION	QTY
1	GA0500142	BHCS M5 X 35 SS A2-70	12
2	GA5004041	BOLT M6 X 16 GR8.8 ZP	8
3	GA5078829	BRASS FITTING, PUSH-TO-CONNECT, STRAIGHT, 1/2 MALE SAE J2044 TO M14 MALE	2
4	GA4562305	EXTENSION TUBE, FUEL FILLER, FUEL TANK, G4, S2	2
5	GA5078827	FUEL CAP, NON LOCKING, MALE SCREW DIAM 65X6.5mm, VENTED BY EQUA VALVE WITH 1 MICRON FILTER, 02347800	2
6	GA4951890	FUEL PICKUP, G4, S2	2
7	GA3500130	HYDRAULIC ADAPTOR, SEAL, METAL BONDED, SUIT M14 MALE THREAD, MBD-14, RYCO	2
8	GA3500301	HYDRAULIC ADAPTOR, PLUG, 1/2 BSPP MALE O RING	1
9	GA5078900	LEVEL SENSOR, DIESEL, 1/2"BSPT CONNECTION, 0-5V OUTPUT, 650mm	1
10	GA5053135	O RING 18 X 2 SUIT SPRAY STOP BODY	1
11	GA4413115	PLATE, MOUNT, FUEL SENDER, COBO	2
12	GA5070305	PLUG 1/2" FLUSH FIT	1
13	GA8500046	TANK, FUEL, G4, S2	1
14	GA5003983	WASHER 5mm FLAT SS	12
15	GA5004437	WASHER 6mm FLAT SS	8
GA4951885 GOLDACRES		TANK ASSEMBLY, FUEL, G4, S2	REV 00

Battery Tray Mounting

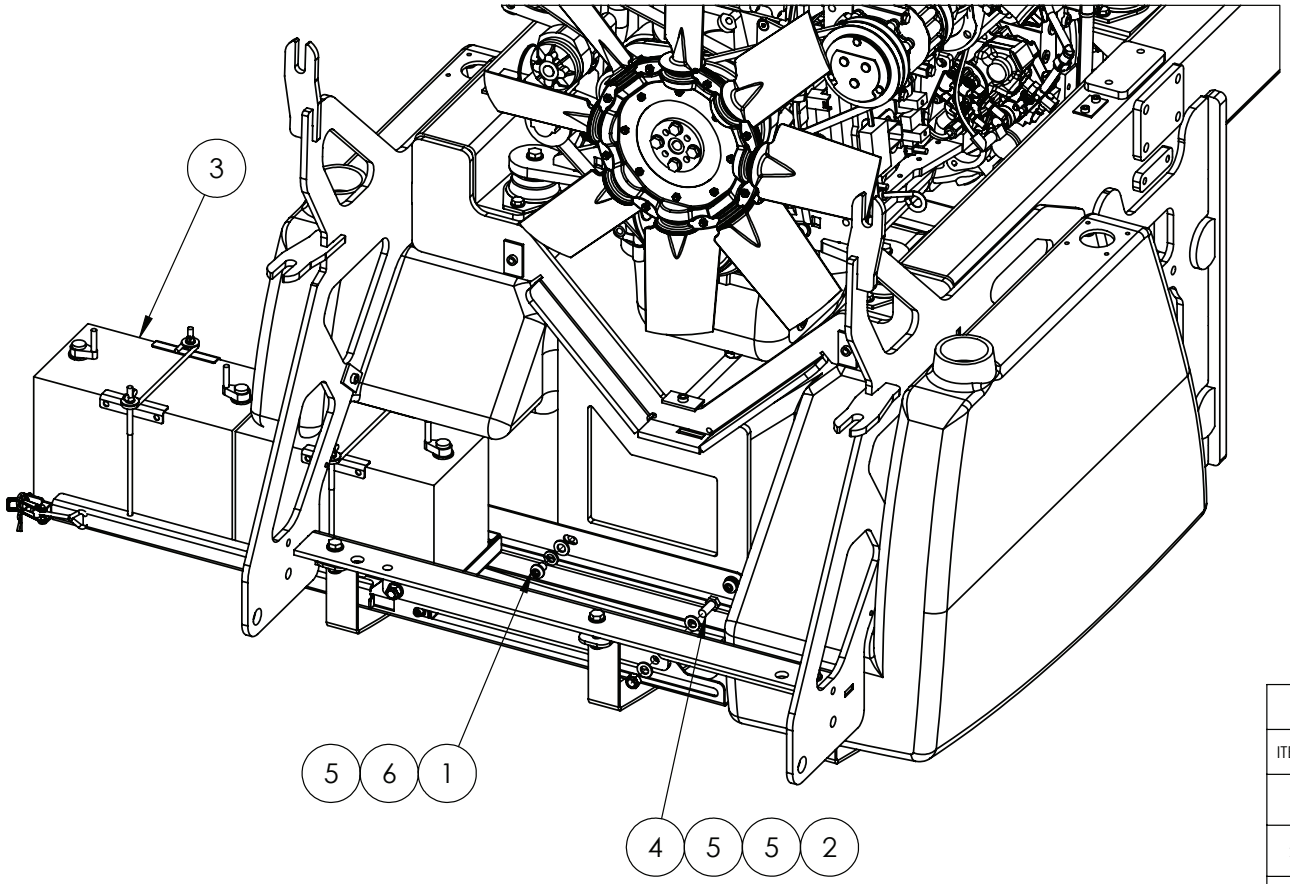

IF DESCRIPTION PREFIX IS ASSEMBLY DRAWING ONLY OR PRODUCTION DRAWING ONLY THE ITEM IS NOT FOR SALE			
ITEM	PART NUMBER	DESCRIPTION	QTY
1	GA5069890	BHCS M12 X 16 GR12.9 ZP	2
2	GA5012461	NUT M12 NYLOC ZP	2
3	GA4951595	PRODUCTION DRAWING ONLY. BATTERY TRAY ASSEMBLY, SLIDING, DUAL BATTERY, G4 S2, MY24	1
4	GA5000305	SET SCREW M12 X 30 GR8.8 ZP	2
5	GA5000577	WASHER 12mm FLAT SS HD	6
6	GA5000575	WASHER 12mm SPRING SS	2
GA7800215 GOLDACRES		ASSEMBLY DRAWING ONLY, BATTERY TRAY, CHASSIS MOUNT, G4 S2, MY24	REV 00

Battery Tray Assembly

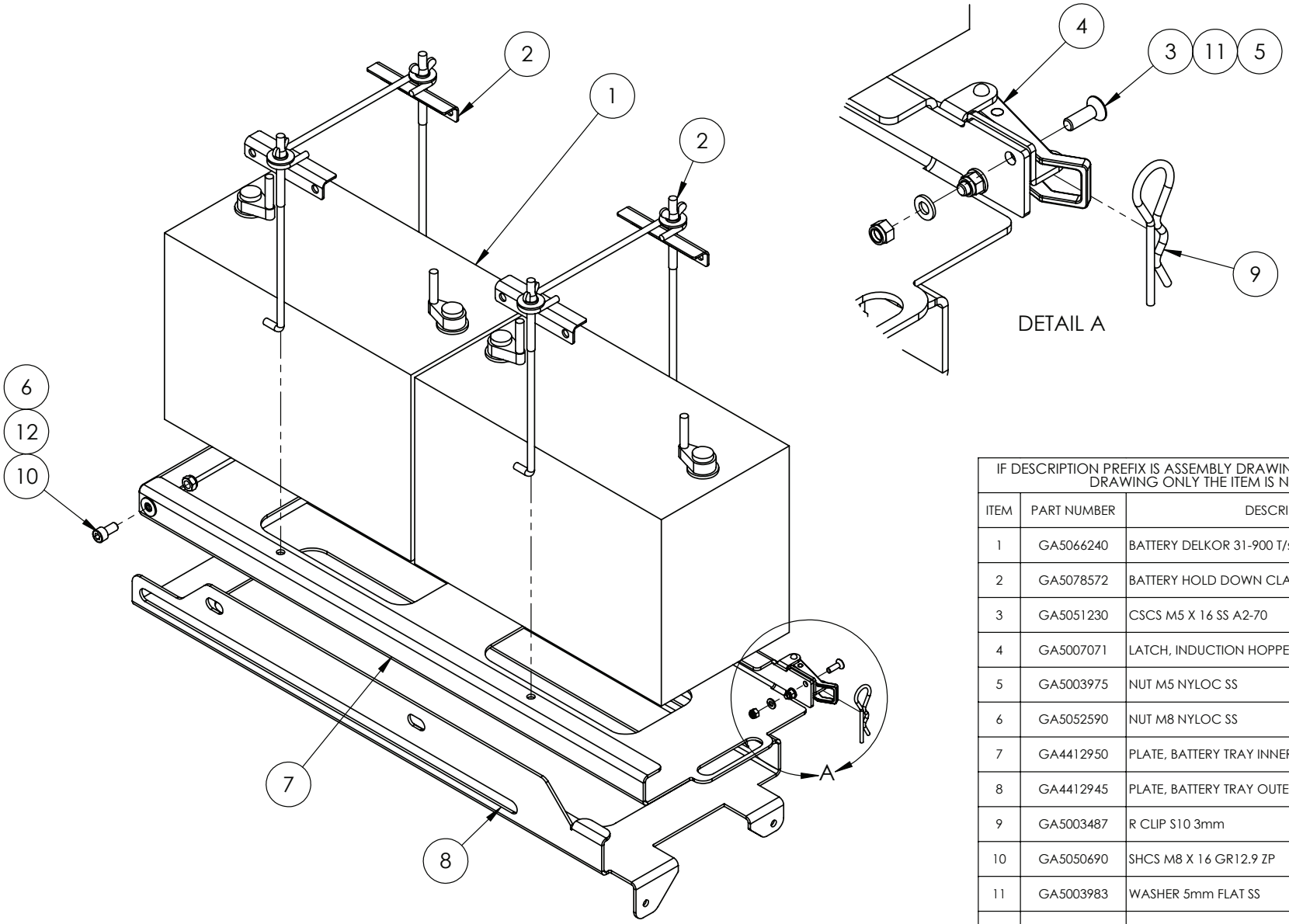

IF DESCRIPTION PREFIX IS ASSEMBLY DRAWING ONLY OR PRODUCTION DRAWING ONLY THE ITEM IS NOT FOR SALE			
ITEM	PART NUMBER	DESCRIPTION	QTY
1	GA5066240	BATTERY DELKOR 31-900 T/s QSB	2
2	GA5078572	BATTERY HOLD DOWN CLAMP KIT, PROJECTA	2
3	GA5051230	CSCS M5 X 16 SS A2-70	2
4	GA5007071	LATCH, INDUCTION HOPPER LID, STAINLESS STEEL	1
5	GA5003975	NUT M5 NYLOC SS	2
6	GA5052590	NUT M8 NYLOC SS	2
7	GA4412950	PLATE, BATTERY TRAY INNER, G4V	1
8	GA4412945	PLATE, BATTERY TRAY OUTER, G4, S2	1
9	GA5003487	R CLIP S10 3mm	1
10	GA5050690	SHCS M8 X 16 GR12.9 ZP	2
11	GA5003983	WASHER 5mm FLAT SS	2
12	GA5003643	WASHER 8mm FLAT SS HD	2
GA4951595 GOLDACRES		PRODUCTION DRAWING ONLY. BATTERY TRAY ASSEMBLY, SLIDING, DUAL BATTERY, G4 S2, MY24	REV 00

Battery Tray Side Cover

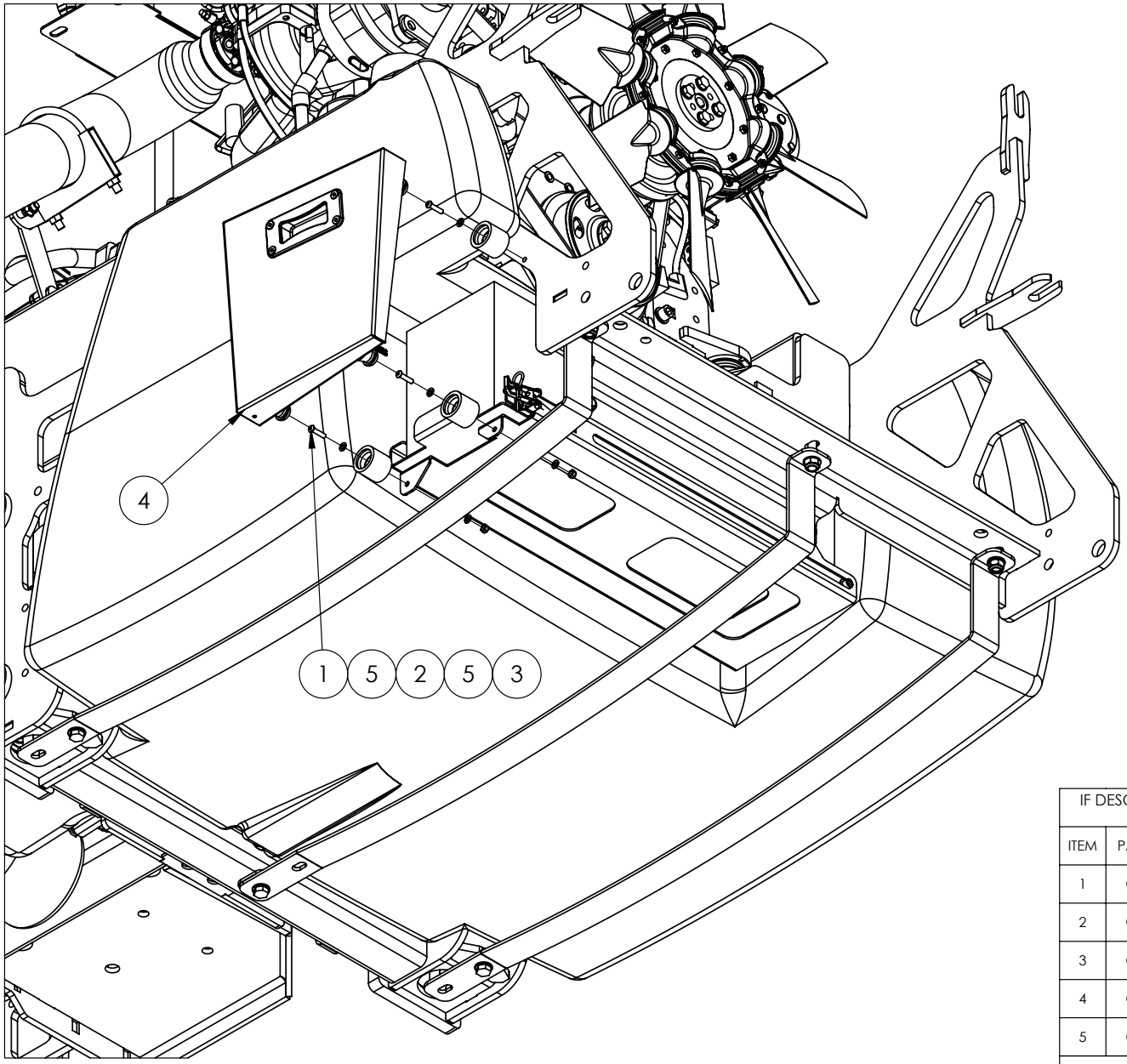

IF DESCRIPTION PREFIX IS ASSEMBLY DRAWING ONLY OR PRODUCTION DRAWING ONLY THE ITEM IS NOT FOR SALE			
ITEM	PART NUMBER	DESCRIPTION	QTY
1	GA5004067	BHCS M6 X 25 SS A2-70	3
2	GA5008629	FEMALE RUBBER DOOR HOLDER (BLACK)	3
3	GA5048115	NUT M6 NYLOC ZP	3
4	GA4951585	PRODUCTION DRAWING ONLY, BATTERY COVER ASSEMBLY, G4, S2	1
5	GA5004437	WASHER 6mm FLAT SS	6
GA7800222 GOLDACRES		ASSEMBLY DRAWING ONLY, BATTERY COVER, TRAY MOUNT, G4 S2, MY24	REV 00.B

Battery Cover Assembly

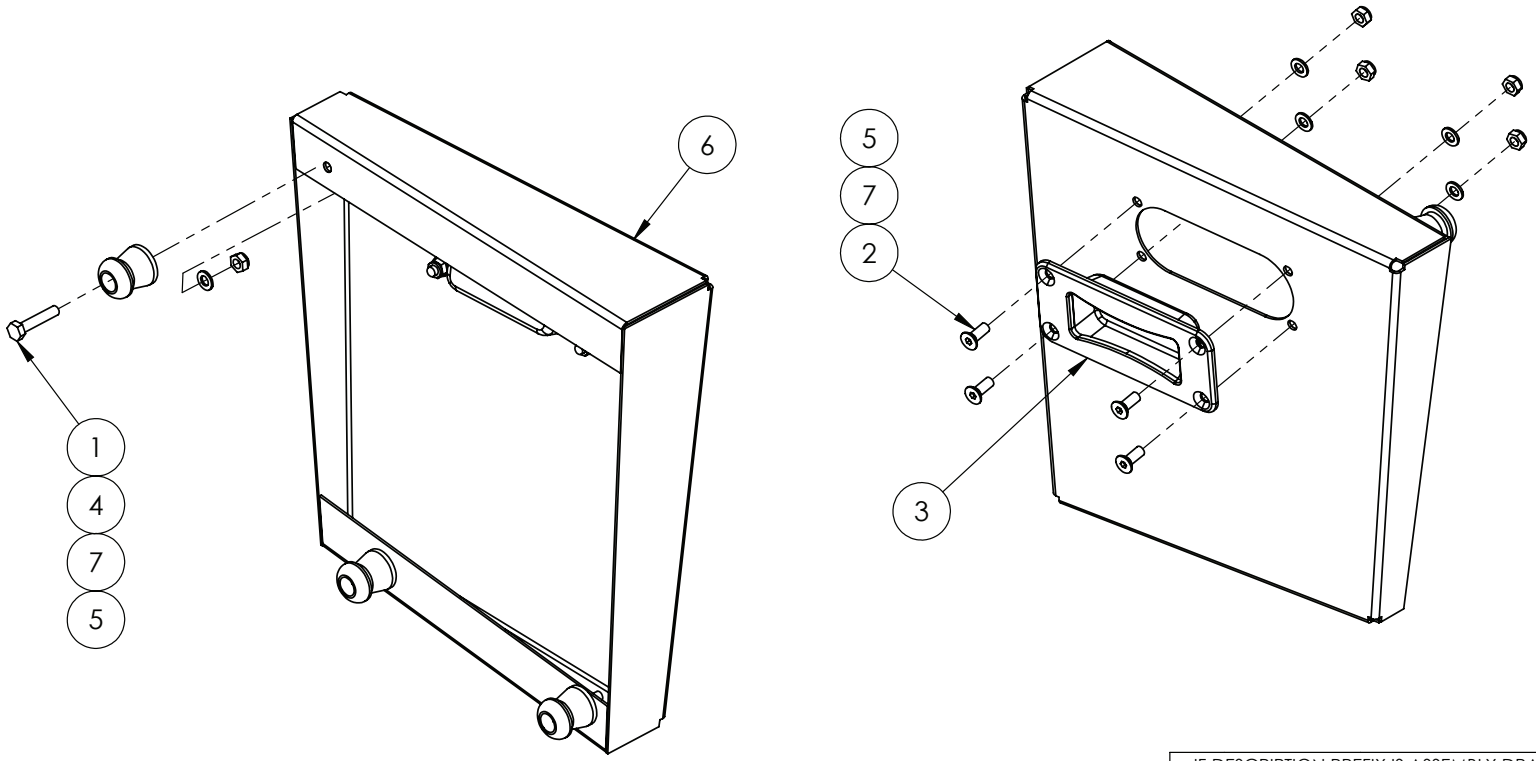

IF DESCRIPTION PREFIX IS ASSEMBLY DRAWING ONLY OR PRODUCTION DRAWING ONLY THE ITEM IS NOT FOR SALE			
ITEM	PART NUMBER	DESCRIPTION	QTY
1	GA5004077	BOLT M6 X 30 GR8.8 ZP	3
2	GA5074550	CSCS M6 X 16 - SS	4
3	GA5074545	MOULDED RECESS GRAB HANDLE - GLASS FILLED NYLON	1
4	GA5011607	MALE RUBBER DOOR HOLDER	3
5	GA5048115	NUT M6 NYLOC ZP	7
6	GA4412955	PLATE BATTERY COVER, G4, S2	1
7	GA5004437	WASHER 6mm FLAT SS	7
GA4951585 GOLDACRES		PRODUCTION DRAWING ONLY, BATTERY COVER ASSEMBLY, G4, S2	REV 00

Tool Box & Hand Wash Tank Mounting

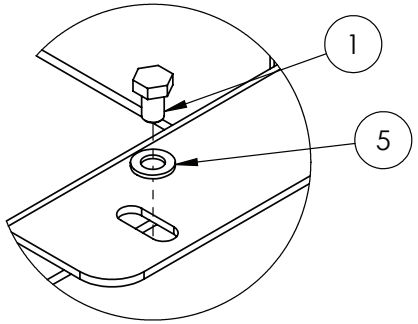

DETAIL A

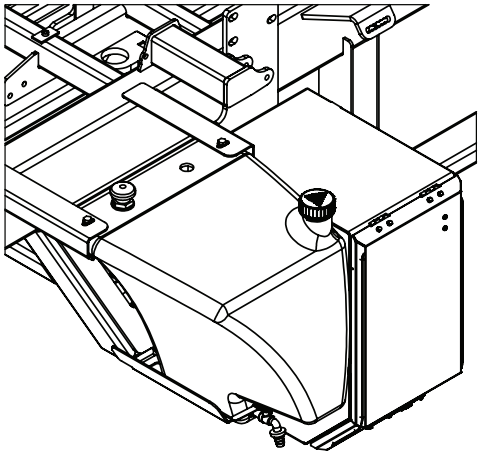

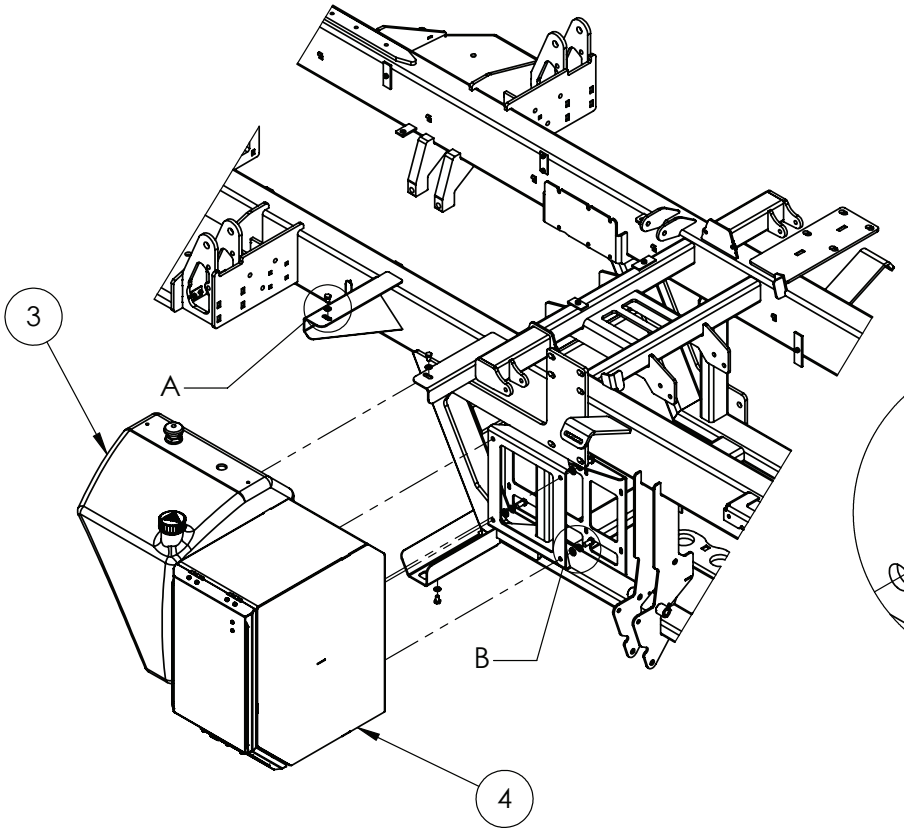

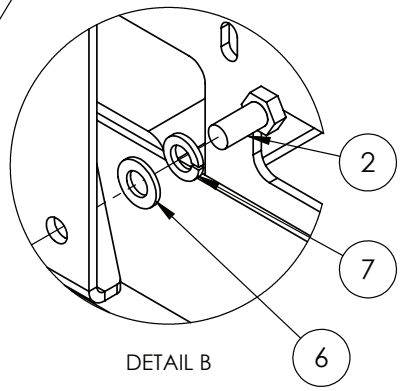

DETAIL B

IF DESCRIPTION PREFIX IS ASSEMBLY DRAWING ONLY OR PRODUCTION DRAWING ONLY THE ITEM IS NOT FOR SALE			
ITEM	PART NUMBER	DESCRIPTION	QTY
1	GA5006143	BOLT M10 X 16 GR8.8 ZP	3
2	GA5011229	BOLT M12 X 25 GR8.8 ZP	4
3	GA4913370	TANK ASSEMBLY, HAND WASH 70L, G4	1
4	GA4914335	TOOL BOX ASSEMBLY, G4, S2	1
5	GA5000117	WASHER 10mm FLAT SS HD	3
6	GA5000577	WASHER 12mm FLAT SS HD	4
7	GA5000575	WASHER 12mm SPRING SS	4
GA7800209 GOLDACRES		ASSEMBLY DRAWING ONLY, TOOL BOX, HAND WASH TANK, CHASSIS MOUNT, G4 S2, MY24	REV 00

Tool Box Tray Assembly

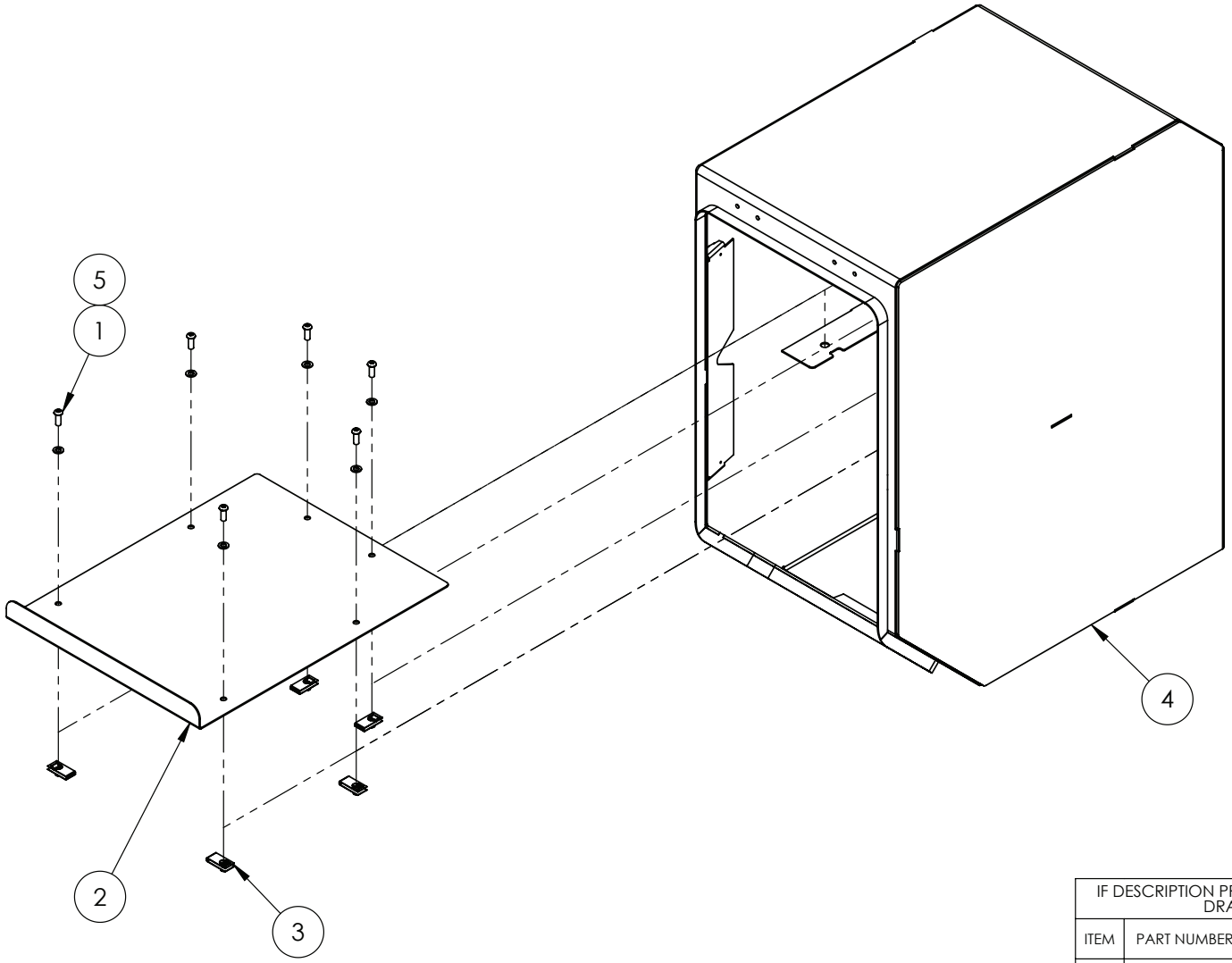

IF DESCRIPTION PREFIX IS ASSEMBLY DRAWING ONLY OR PRODUCTION DRAWING ONLY THE ITEM IS NOT FOR SALE			
ITEM	PART NUMBER	DESCRIPTION	QTY
1	GA5004047	BHCS M6 X 16 GR12.9 ZP	6
2	GA4414380	PLATE, SHELF, TOOL BOX FRAME, G4, S2	1
3	GA5066830	SPEED CLIP M6	6
4	GA4604460	TOOL BOX FRAME, G4, S2	1
5	GA5004437	WASHER 6mm FLAT SS	6
GA4914335 GOLDACRES		TOOL BOX ASSEMBLY, G4, S2	REV 00.E

Tool Box, LED Light & PLC Mounting

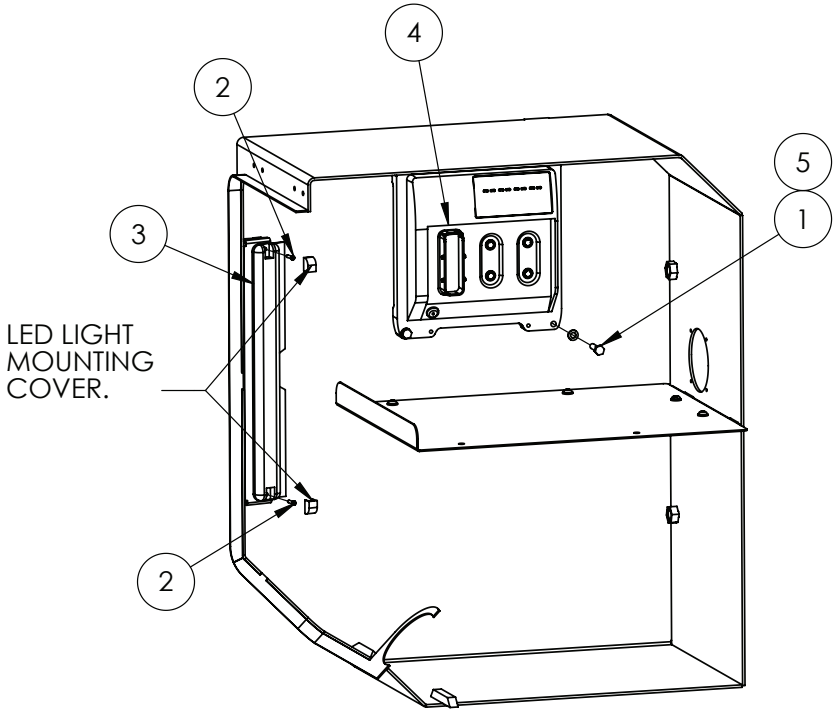

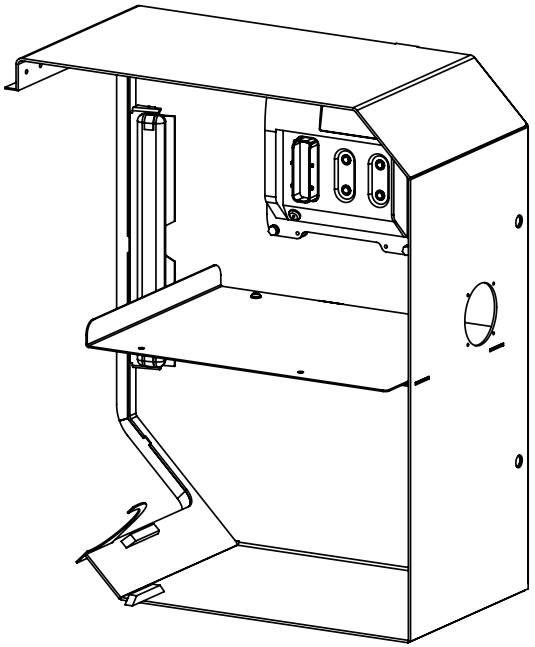

USE LOCTITE 243
ON ALL BOLT THREADS

IF DESCRIPTION PREFIX IS ASSEMBLY DRAWING ONLY OR PRODUCTION DRAWING ONLY THE ITEM IS NOT FOR SALE			
ITEM	PART NUMBER	DESCRIPTION	QTY
1	GA5004073	BOLT M6 X 25 GR8.8 ZP	4
2	GA5003083	BOLT PAN HEAD M3 X 12	2
3	GA4950005	LIGHT, LED STRIP LIGHT, ASSEMBLY, G6, TOOLBOX	1
4	GA3000906	PLC, G4 MACHINE CONTROLLER MY24, CR710S, IFM	1
5	GA5004437	WASHER 6mm FLAT SS	4
GA4914335 GOLDACRES		TOOL BOX ASSEMBLY, G4, S2	REV 01

Tool Box, Strut & Pinchweld

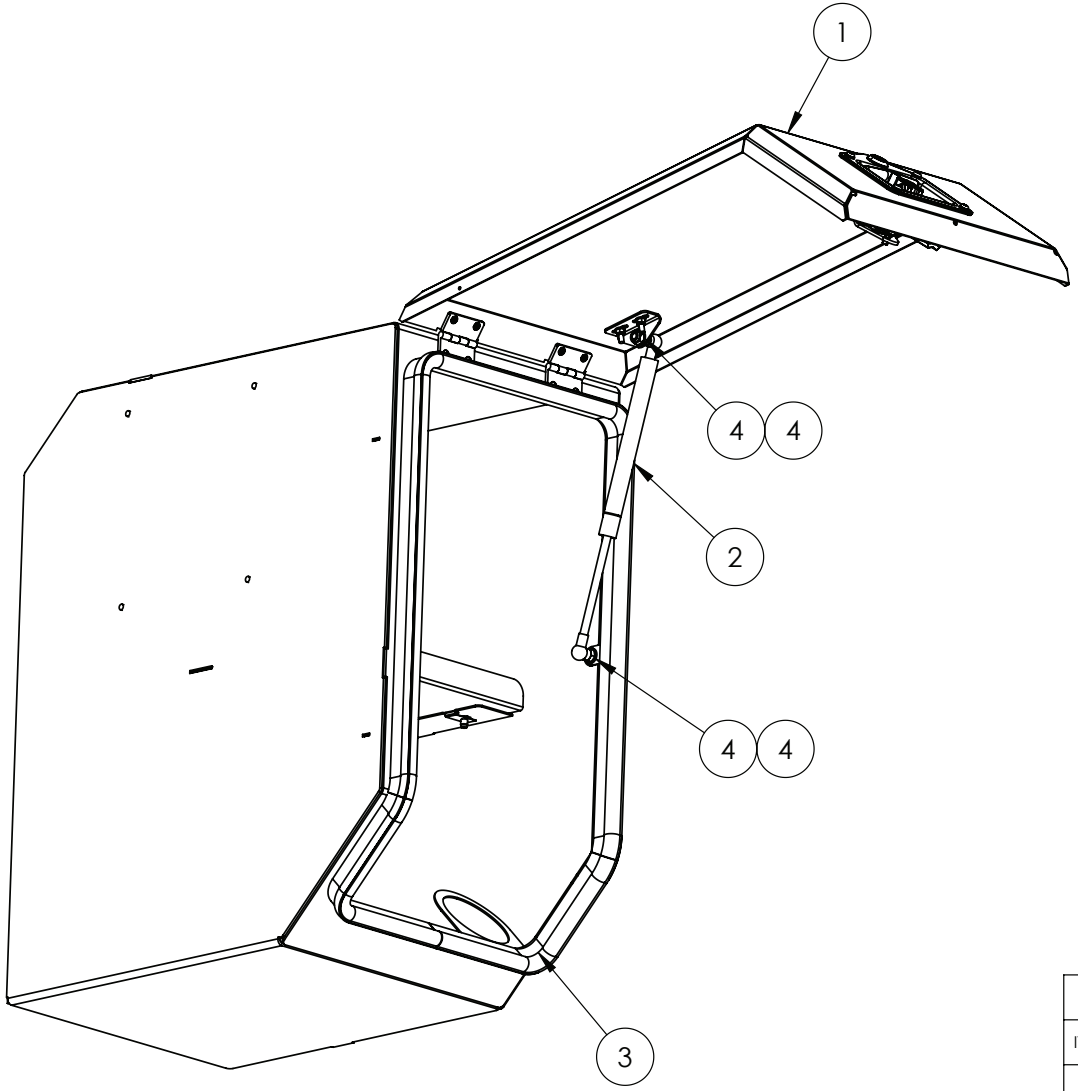

IF DESCRIPTION PREFIX IS ASSEMBLY DRAWING ONLY OR PRODUCTION DRAWING ONLY THE ITEM IS NOT FOR SALE			
ITEM	PART NUMBER	DESCRIPTION	QTY
1	GA4914340	ASSEMBLY DRAWING ONLY, DOOR, TOOLBOX, G4, S2	1
2	GA5078511	GAS STRUT, 6/18 DIAMETER, 325 EXTENDED LENGTH, 123mm STROKE, BALL ENDS 10mm, 250N	1
3	GA5072700	PINCHWELD, TOP BLISTER, 16.3mm X 30mm CUT 1.75M LONG	1
4	GA5003643	WASHER 8mm FLAT SS HD	4
GA4914335 GOLDACRES		TOOL BOX ASSEMBLY, G4, S2	REV 00.E

Tool Box Door Assembly

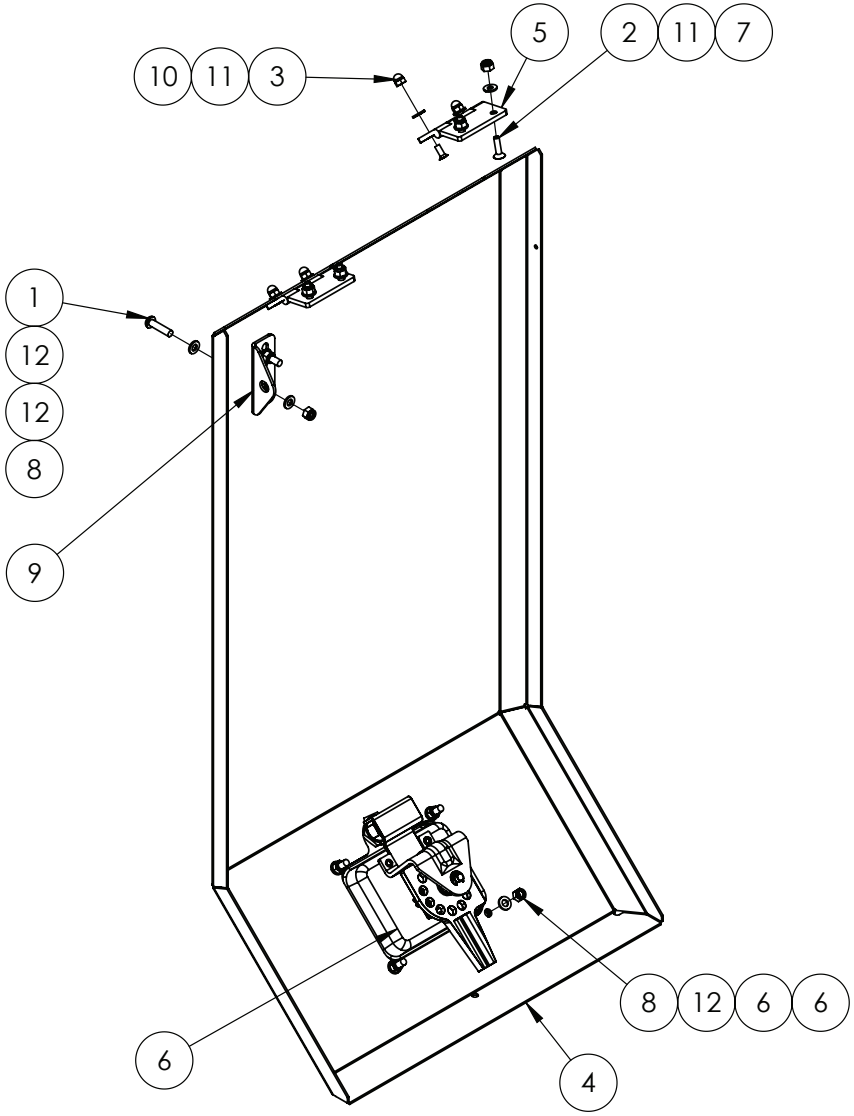

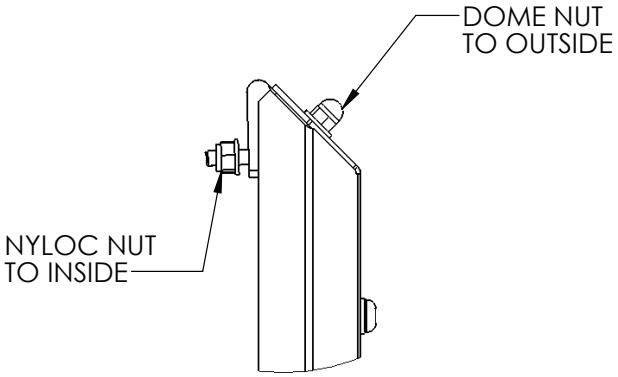

DETAIL A

IF DESCRIPTION PREFIX IS ASSEMBLY DRAWING ONLY OR PRODUCTION DRAWING ONLY THE ITEM IS NOT FOR SALE			
ITEM	PART NUMBER	DESCRIPTION	QTY
1	GA0500004	BHCS M5 X 20 SS A2-70	6
2	GA0500153	CSCS M4 X 16 SS A2-70	4
3	GA0500114	DOME NUT, M4, 304 SS	4
4	GA4414375	DOOR, TOOL BOX, G4, S2	1
5	GA5020415	HINGE CABIN S/S 50 X 52 X 3	2
6	GA5078512	LATCH, LOCK, T BAR, SUIT TOOL BOX	1
7	GA5003501	NUT M4 NYLOC ZP	4
8	GA5003974	NUT M5 NYLOC ZP	6
9	GA4405885	PLATE, GAS STRUT MOUNT, TOOL BOX, G6 MY20	1
10	GA0500111	SCREW CSK PHILLIPS M4 X 10, SS	4
11	GA5020510	WASHER 4mm FLAT SS	8
12	GA5003983	WASHER 5mm FLAT SS	12
GA4914340 GOLDACRES	ASSEMBLY DRAWING ONLY, DOOR, TOOLBOX, G4, S2		REV 00.B

Rinse Tank Mounting

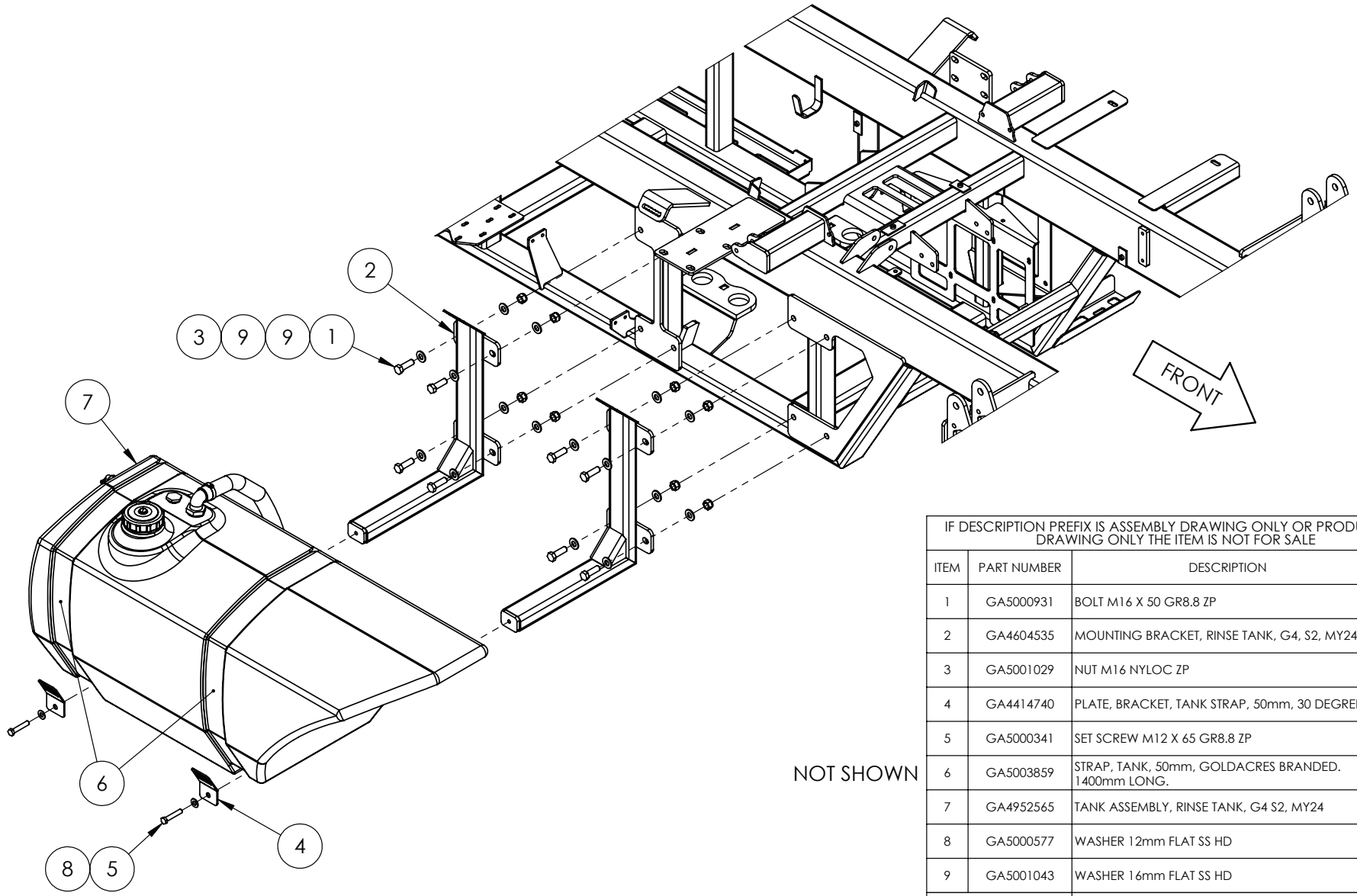

NOT SHOWN

IF DESCRIPTION PREFIX IS ASSEMBLY DRAWING ONLY OR PRODUCTION DRAWING ONLY THE ITEM IS NOT FOR SALE			
ITEM	PART NUMBER	DESCRIPTION	QTY
1	GA5000931	BOLT M16 X 50 GR8.8 ZP	8
2	GA4604535	MOUNTING BRACKET, RINSE TANK, G4, S2, MY24	2
3	GA5001029	NUT M16 NYLOC ZP	8
4	GA4414740	PLATE, BRACKET, TANK STRAP, 50mm, 30 DEGREE	2
5	GA5000341	SET SCREW M12 X 65 GR8.8 ZP	2
6	GA5003859	STRAP, TANK, 50mm, GOLDACRES BRANDED. 1400mm LONG.	2
7	GA4952565	TANK ASSEMBLY, RINSE TANK, G4 S2, MY24	1
8	GA5000577	WASHER 12mm FLAT SS HD	2
9	GA5001043	WASHER 16mm FLAT SS HD	16
GA7800179 GOLDACRES		ASSEMBLY DRAWING ONLY. RINSE TANK, G4 S2, MY24	REV 00

Tank Fill Shutoff, 3” Front Fill & Pressure Filter Mounting

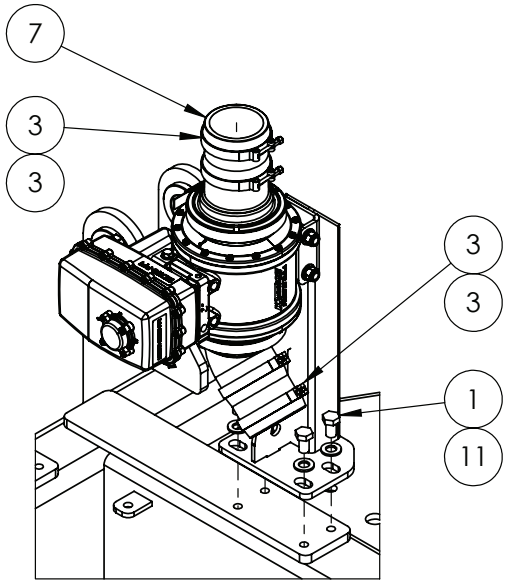

DETAIL B

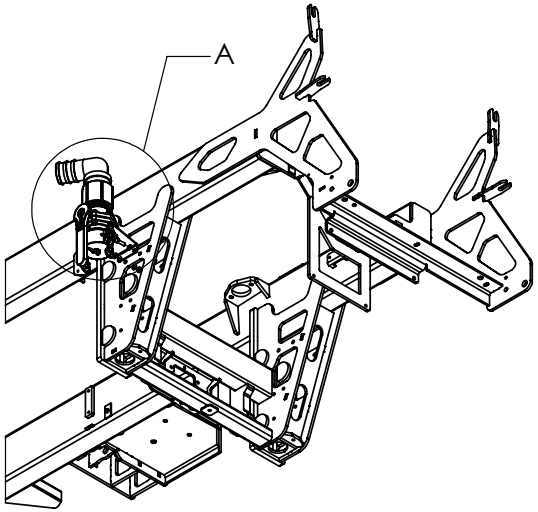

IF 50058 OPTIONED, FIT ITEMS

9 3 4 10

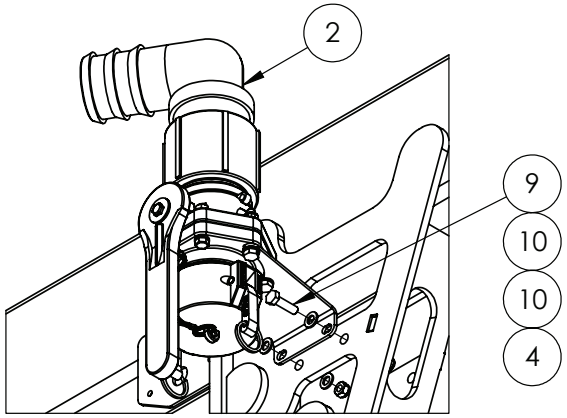

DETAIL A

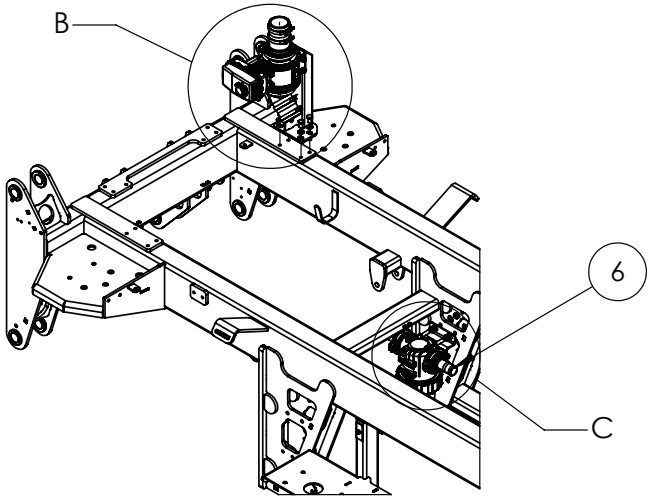

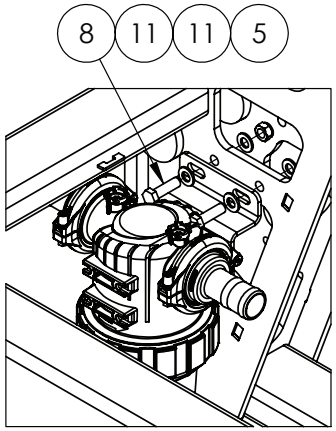

DETAIL C

IF DESCRIPTION PREFIX IS ASSEMBLY DRAWING ONLY OR PRODUCTION DRAWING ONLY THE ITEM IS NOT FOR SALE			
ITEM	PART NUMBER	DESCRIPTION	QTY
1	GA5011227	BOLT M12 X 20 GR8.8 ZP	4
2	GA4913505	FILL POINT ASSEMBLY, 3", FRONT MOUNT, CROP CRUISER	1
3	GA5010195	HOSE CLAMP, 3", T BOLT, 3.25" TO 3.56", LIGHT DUTY, DONALDSON	4
4	GA5000141	NUT M10 NYLOC ZP	2
5	GA5012461	NUT M12 NYLOC ZP	2
6	GA4952710	PRODUCTION DRAWING ONLY, PRESSURE FILTER ASSEMBLY, G4, S2	1
7	GA4952540	PRODUCTION DRAWING ONLY, TANK FILL SHUTOFF VALVE, G4 S2, MY24	1
8	GA5000319	SET SCREW M12 X 40 GR8.8 ZP	2
9	GA5006111	SET SCREW M10 X 35 GR8.8 ZP	2
10	GA5000117	WASHER 10mm FLAT SS HD	4
11	GA5000577	WASHER 12mm FLAT SS HD	8
GA7800210 GOLDACRES		ASSEMBLY DRAWING ONLY, PRESSURE FILTER, TANK FILL SHUTOFF, FILL POINT, G4 S2, MY24	REV 01

Tank Fill Shut Off Valve Assembly

REPLACEMENT PARTS			
ITEM	PART NUMBER	DESCRIPTION	QTY
A	GA2000157	BALL VALVE, VALVE ONLY, SUIT GA2000144, KZ VALVE	-
B	GA2000161	BALL VALVE, ACTUATOR ONLY, SUIT GA2000144, KZ VALVE	-

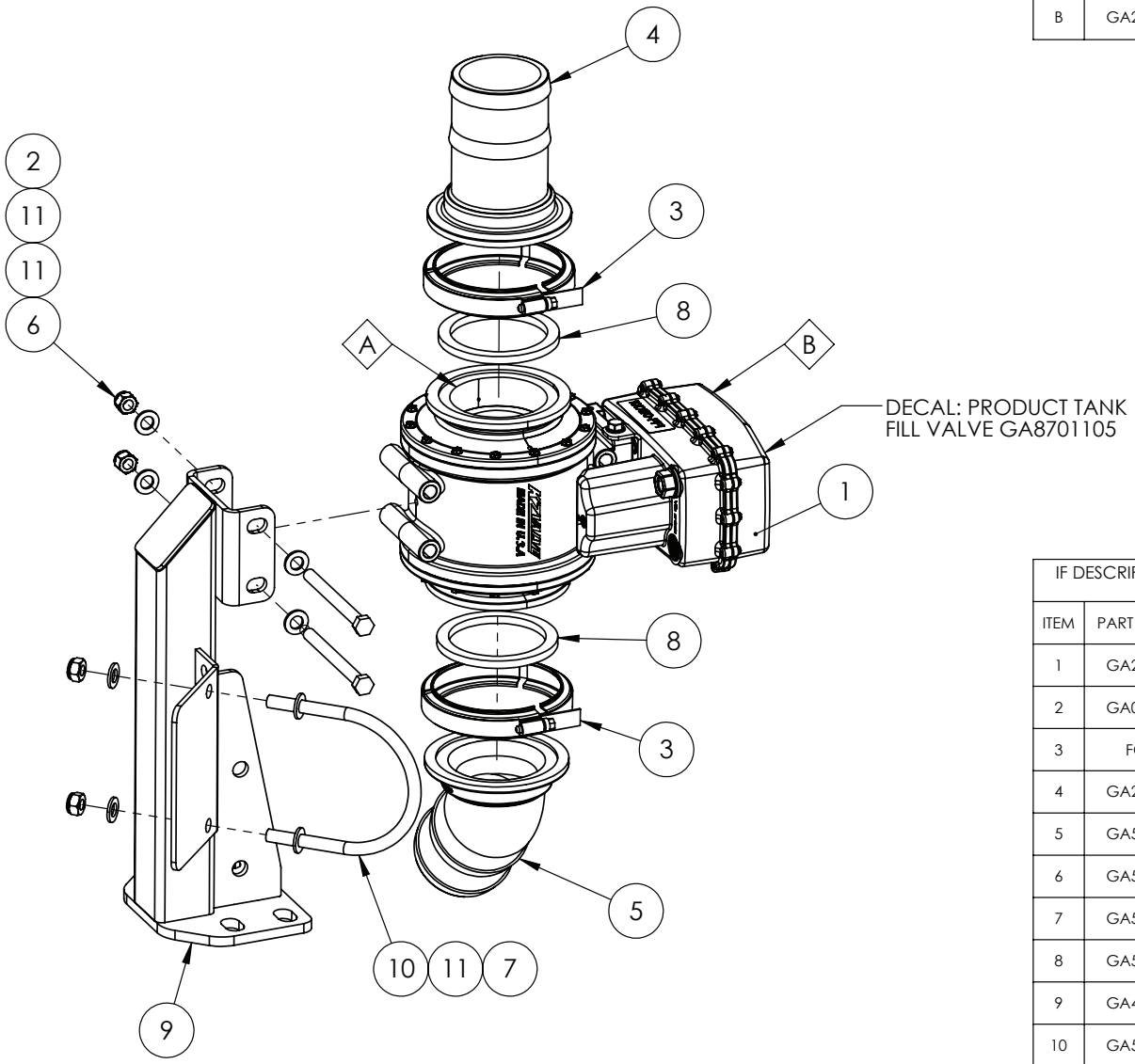

IF DESCRIPTION PREFIX IS ASSEMBLY DRAWING ONLY OR PRODUCTION DRAWING ONLY THE ITEM IS NOT FOR SALE			
ITEM	PART NUMBER	DESCRIPTION	QTY
1	GA2000144	BALL VALVE, MOTORISED, 2 WAY, 3" FLANGED CONNECTIONS, 3 SECOND, PWM, KZ VALVE	1
2	GA0500039	BOLT, 3/8" X 4" UNC ZP, GR8	2
3	FC300	CLAMP, 3" FLANGE MANIFOLD, BANJO	2
4	GA2000061	HOSE BARB, STRAIGHT, 3" FLANGE X 3" HOSE, BANJO	1
5	GA5077874	MANIFOLD HOSE BARB 3", 45 DEGREE, M300BRB45	1
6	GA5048345	NUT 3/8", NYLOC, ZP, UNC	2
7	GA5000141	NUT M10 NYLOC ZP	2
8	GA5076723	SEAL, EPDM, SUIT 3 FLANGE FITTING, BANJO, 300G	2
9	GA4604540	TANK FILL MOUNT, G4, S2	1
10	GA5070905	U BOLT SUIT PARALIFT ARM HYDRAULIC HOSE	1
11	GA5000117	WASHER 10mm FLAT SS HD	6
GA4952540 GOLDACRES		PRODUCTION DRAWING ONLY, TANK FILL SHUTOFF VALVE, G4 S2, MY24	REV 00.B

Pressure Filter Assembly & Mounting Bracket

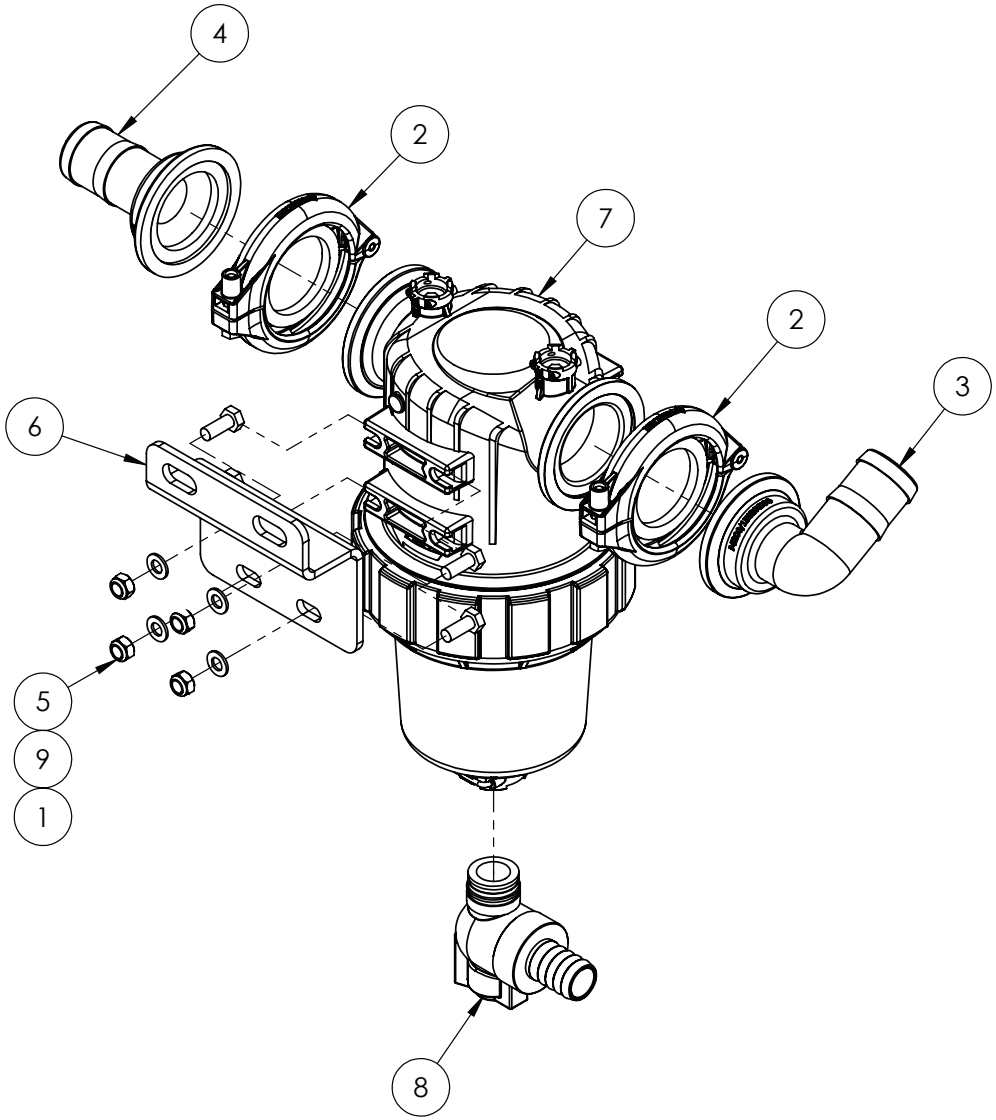

IF DESCRIPTION PREFIX IS ASSEMBLY DRAWING ONLY OR PRODUCTION DRAWING ONLY THE ITEM IS NOT FOR SALE			
ITEM	PART NUMBER	DESCRIPTION	QTY
1	GA5004085	BOLT M8 X 20 GR8.8 ZP	4
2	GA2000115	FLANGE CLAMP, AND GASKET, 2", SERIES 220, HYPRO	2
3	GA5077834	HOSE BARB, ELBOW, 90 DEGREE, 2" FLANGE X 1 1/2" HOSE, BANJO	1
4	GA2000047	HOSE BARB, FLANGE, STRAIGHT, 2" FLANGE X 1 1/2" HOSE, BANJO	1
5	GA5004917	NUT M8 NYLOC ZP	4
6	GA4414475	PLATE, MOUNT, PRESSURE FILTER 2", G4, S2	1
7	GA2000563	PRESSURE FILTER, 2", 100 MESH, ARAG SERIES 330	1
8	GA2000564	VALVE, BALL, DRAIN FOR FILTER 330 SERIES	1
9	GA5003643	WASHER 8mm FLAT SS HD	4
GA4952710 GOLDACRES		PRODUCTION DRAWING ONLY, PRESSURE FILTER ASSEMBLY, G4, S2	REV 00

3” Front Fill Inlet Assembly

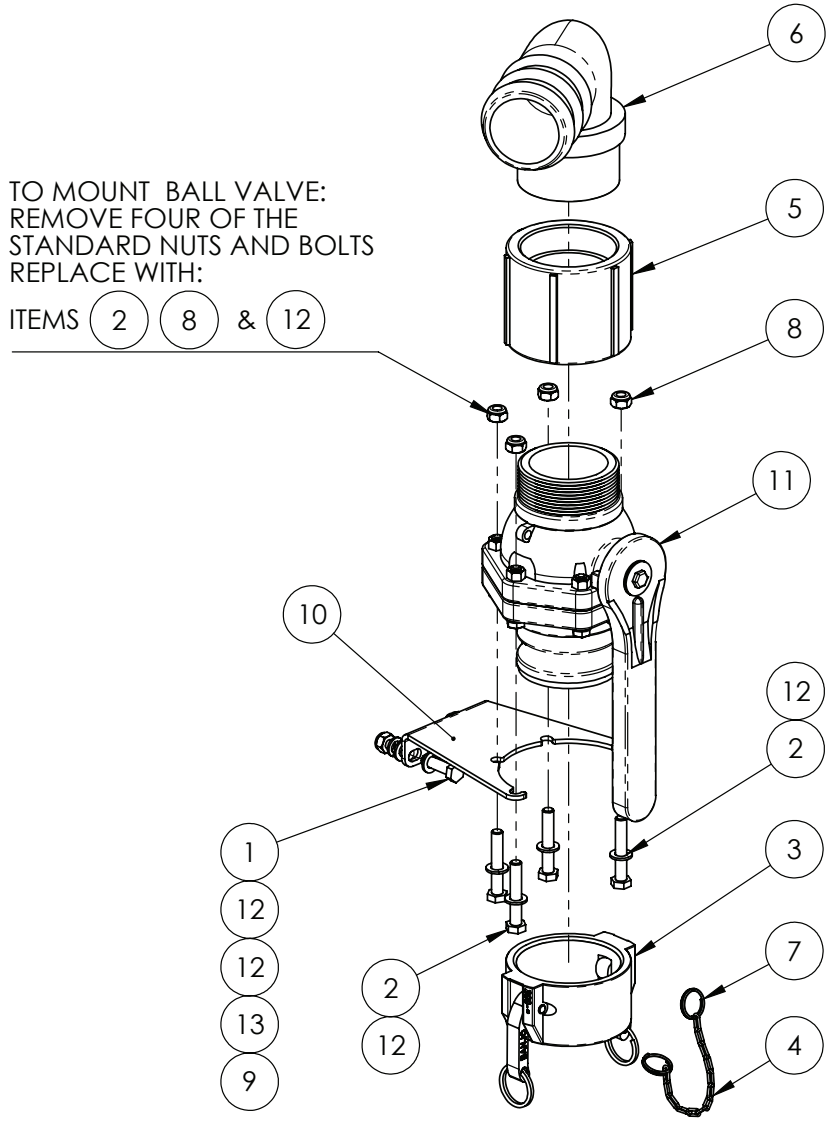

CONFIGURATION OPTION 50058

IF DESCRIPTION PREFIX IS ASSEMBLY DRAWING ONLY OR PRODUCTION DRAWING ONLY THE ITEM IS NOT FOR SALE			
ITEM	PART NUMBER	DESCRIPTION	QTY
1	GA5006111	BOLT M10 X 35 GR8.8 ZP	2
2	GA5011175	BOLT M10 X 60 GR8.8 ZP	4
3	GA5076719	CAM LEVER, 3" FEMALE CAP, BANJO	1
4	GA5001491	CHAIN 2 X 20 mm SS 316, 146102, 150mm LONG	0.15
5	GA5077642	COUPLING, SOCKET, 3" FEMALE THREAD, BANJO	1
6	GA5077742	HOSE BARB, ELBOW, 90 DEGREE, 3" MALE THREAD X 3" HOSE, BANJO	1
7	GA5002077	KEY RING, 25mm, SS	2
8	GA5051445	NUT M10 NYLOC SS	4
9	GA5000141	NUT M10 NYLOC ZP	2
10	GA4509400	PLATE, BALL VALVE MOUNT, 3" BANJO	1
11	GA5078204	VALVE, BALL, 3", MALE NPT, MALE CAM LOCK, STUBBLY, LONG HANDLE, BANJO, VSFMT300	1
12	GA5000117	WASHER 10mm FLAT SS HD	8
13	GA5000137	WASHER 10mm SPRING SS	2
GA4913505 GOLDACRES		FILL POINT ASSEMBLY, 3", FRONT MOUNT, CROP CRUISER	REV 03

LED Work Light Mounting

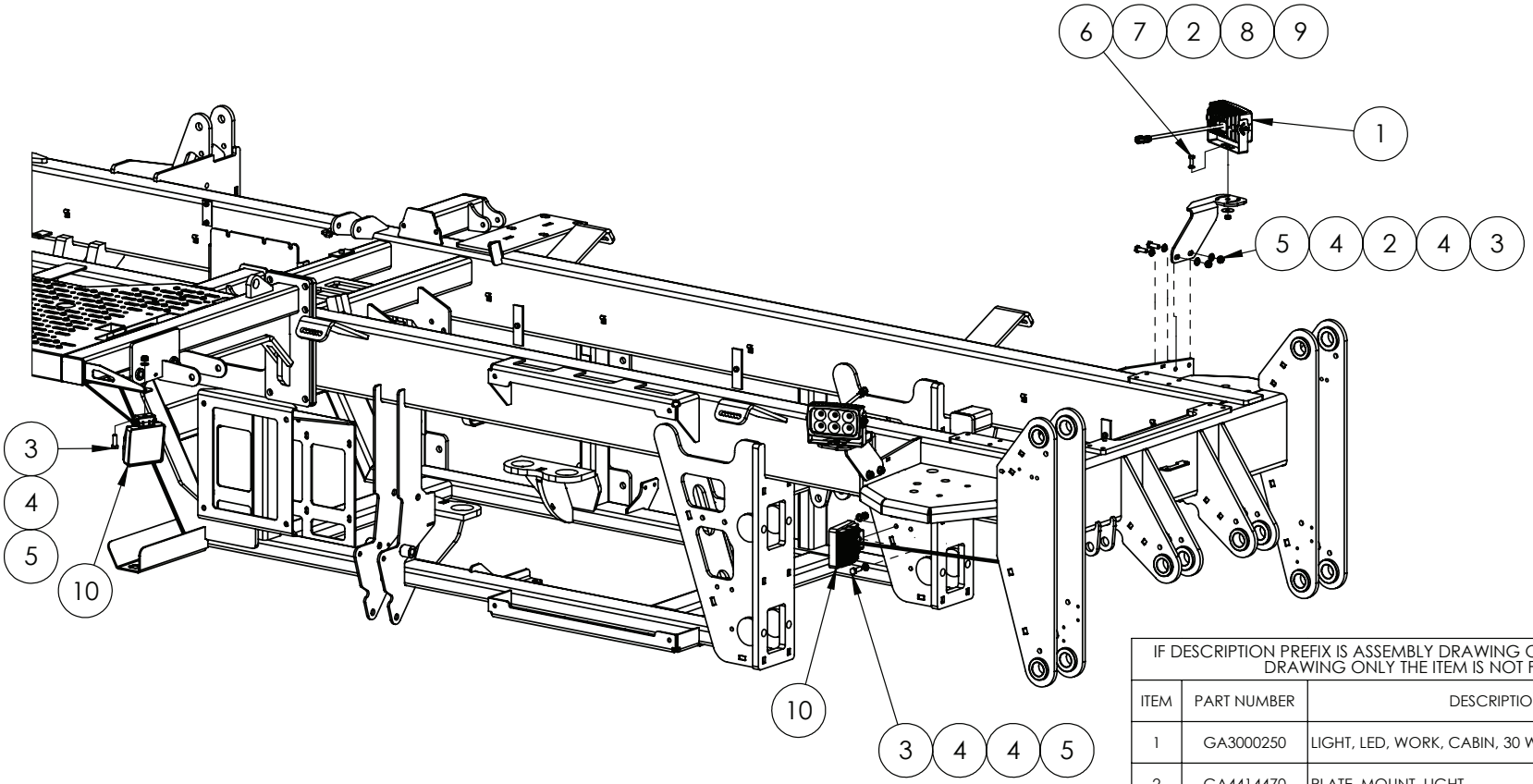

IF DESCRIPTION PREFIX IS ASSEMBLY DRAWING ONLY OR PRODUCTION DRAWING ONLY THE ITEM IS NOT FOR SALE			
ITEM	PART NUMBER	DESCRIPTION	QTY
1	GA3000250	LIGHT, LED, WORK, CABIN, 30 WATT	2
2	GA4414470	PLATE, MOUNT, LIGHT	2
3	GA5065455	BOLT M10 X 30 GR8.8 ZP	6
4	GA5000117	WASHER 10mm FLAT SS HD	11
5	GA5000141	NUT M10 NYLOC ZP	6
6	GA5011465	BOLT M8 X 20 GR8.8 ZP	2
7	GA5003643	WASHER 8mm FLAT SS HD	2
8	GA5003645	WASHER 5/16" ID X 1 1/4" OD FLAT SS	2
9	GA5004917	NUT M8 NYLOC ZP	2
10	GA5075500	LIGHT, LED, WORK, FLOOD BEAM, 15W	2
GA7800227 GOLDACRES		ASSEMBLY DRAWING ONLY, BOOM LIGHTS & WORK LIGHTS G4, S2, MY24	REV

04 - Pumps

Pump, UDOR, Zeta 260, Parts Breakdown

REPLACEMENT PARTS			
ITEM	PART NUMBER	DESCRIPTION	QTY
-	GA5077792	PUMP REBUILD KIT, INCLUDES DIAPHRAGMS, SEALS & VALVES, SUITS, ZETA 260, RO250 AND ZETA 300 IN PTO AND HYD DRIVE, KIT-ZETA260-C	-
-	GA5077793	PUMP DIAPHRAGM KIT, SUIT ZETA 260, RO250 AND ZETA 300, UDOR PUMPS, KIT-ZETA260-D	-
-	GA5054505	PUMP, DIAPHRAGM TYPE, ZETA 260, THROUGH SHAFT PTO DRIVE, UDOR	-
-	GA5054500	PUMP ZETA 260 MI-1	-

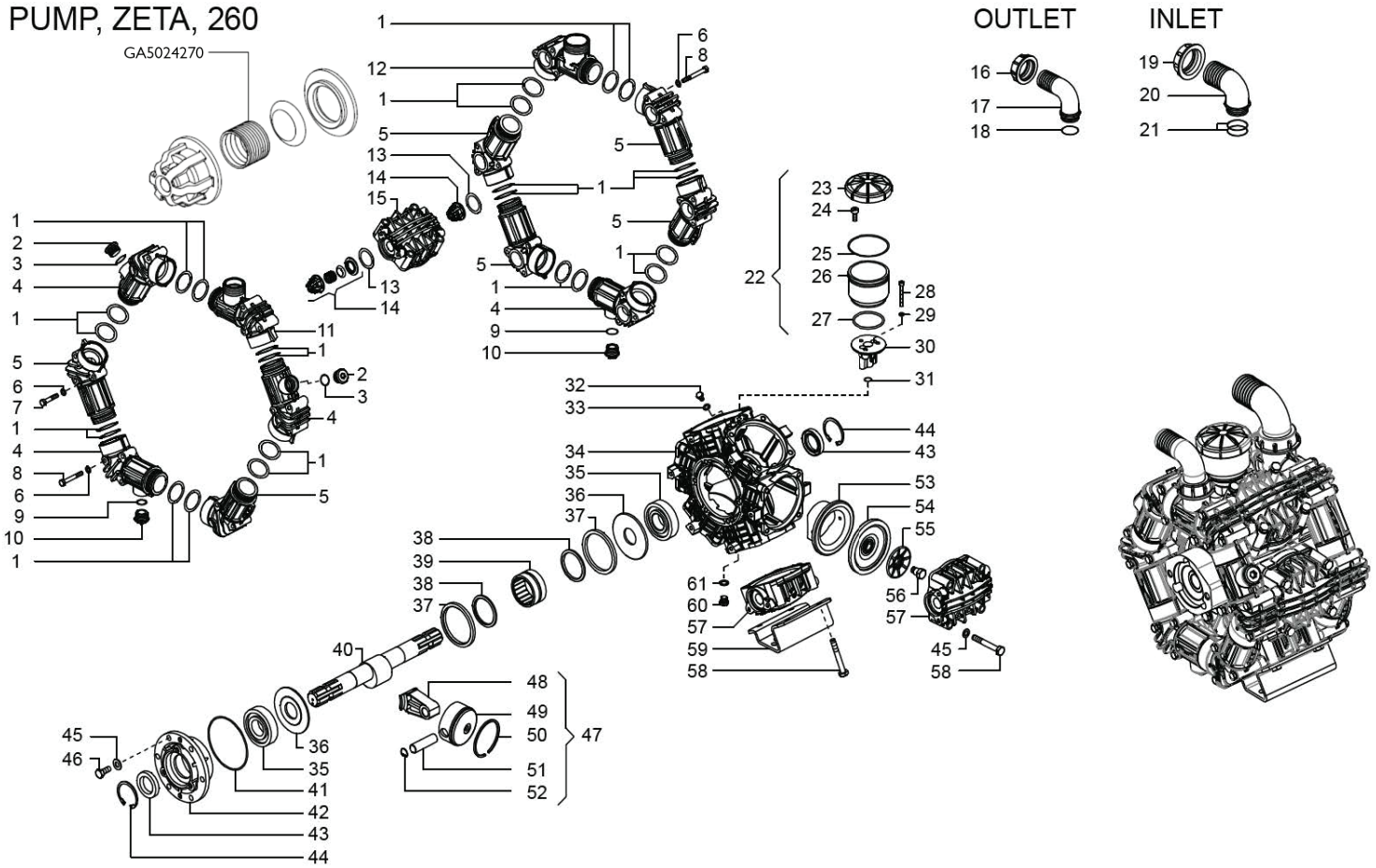

PARTS LIST ON FOLLOWING PAGE

GA5054500 GOLDACRES	PUMP ZETA 260 MI-1	REV 00

Diaphragm Pump, UDOR Zeta 260, Parts List

PUMP ZETA 260 MI-1					
ITEM	PART NUMBER	DESCRIPTION	ITEM	PART NUMBER	DESCRIPTION
1	GA5076101	O-RING D47,22X3,53 (RIF.4187), 1101G5	32	180483	BOLT, UDOR, 180483
2	GA5076518	PLUG, 3/4 MALE THREAD, UDOR, 160387	33	GA5076442	GASKET D8,5X14X1,5, 140312
3	GA5076080	O-RING D20,00X4 (RIF.2820), 110151	34	0209B5	CRANKCASE, ZETA 230/260/300, 0209B5
4	GA5076536	INLET-OUTLET HOSE G3/4 F ZETA 230/300, 160538	35	GA5075729	BEARING, SINGLE ROW BALL, 35 ID X 80 OD X 21, 6307, 021404
5	GA5076497	INLET-OUTLET HOSE ZETA 230/260/300, 160134	36	GA5075754	ROD DISC ZETA 170/200/260/300, 030128
6	GA5076443	WASHER D8,4X16X1,6 DACROMET, 140348	37	GA5075603	RETAINER RING "ZETA 170/260", 000108
7	GA5076557	BOLT, M8 X 50, DACROMET, UDOR, 180472	38	GA5075763	ROD SPACER "ZETA 230/260", 030259
8	GA5076560	BOLT, M8 X 70, DACROMET, UDOR, 180479	39	GA5075738	ROLLER BEARING D55X68X35 NK55-35, 021607
9	GA5076060	O RING, 20.63 X 2.62, 110104	40	GA5075607	SHAFT "BETA/ZETA 170/260" (9) TS 2C, 000229
10	GA5076512	PLUG G3/4, 160336	41	GA5076084	O RING, 2.5 X 110, 110158
11	GA5076535	OUTLET HOSE G11/2 M ZETA 230/260/300, 160537	42	0501L3	BEARING SUPPORT FLANGE, 0501L3
12	GA5076496	SUCTION HOSE G2 M ZETA 300, 160133	43	GA5075634	OIL SEAL, 35 ID X 55 OD X 10 THICK, 000749, 000702
13	GA5020060	O-RING, 40 X 3.5. 110101	44	GA5076457	SNAP RING D55, 150616
14	GA5077086	VALVE, CHECK, INLET / OUTLET, SUIT ZETA 140 / 200 / 300, 600677	45	140349	WASHER D10, UDOR, 140349
15	160474	HEAD ZETA 230/260, 160474	46	180499	BOLT, UDOR, 180499
16	GA5075797	FLY NUT, 1 1/2, HEAVY DUTY FOR USE ON SPRAY PUMPS, UDOR, 060450	47	GA5078353	ROD ASSY ZETA 260 D75, 601559
17	GA5076444	HOSE BARB, ELBOW, 90 DEGREE, RO / ZETA PUMP INLET / OUTLET , 140688	48	151933	CONNECTING ROD, SUIT 260 PUMP, UDOR, 151933
18	GA5076075	O RING, 32.00 X 3.0, 110142	49	GA5076387	ALUMINIUN PLUNGER D75 BETA/OMEGA/ZETA, 120508
19	GA5075795	FLY NUT, 2, UDOR, 060439	50	GA5076459	RING, PISTON, D75X3X3, 150905
20	GA5075689	HOSE BARB, ELBOW, 90 DEGREE, 50MM BARB X FLY NUT END, UDOR, 020279	51	GA5076449	PIN D18X64, 150201
21	GA5024235	O RING, 32.98 X 3.53, 110108	52	GA5076455	SNAP RING D18, 150602
22	GA5077101	OIL RESERVOIR, ASSEMBLY SUIT ZETA 230, 260, 300 PUMPS, UDOR, 603302	53	GA5075701	SLEEVE, PISTON BORE, DIAMETER 75, SUIT ZETA 120 / 170 / 260, UDOR, 020614
23	GA5075710	OIL RESERVOIR COVER BETA, 020822	54	GA5075998	DIAPHRAGM, PUMP PISTON, DIAMETER 115.4, ZETA PUMP, 090361,090359
24	GA5076565	ALLEN SCREW M8X20 UNI5931, 180506	55	GA5075749	WASHER, PUMP DIAPHRAGM RETAINER, SUIT ZETA 120 / 150, RO 320, 030107
25	GA5076073	O RING, 83.00 X 2.5, 110132	56	GA5075658	BOLT, SUIT PUMP DIAPHRAGM, KAPPA / ZETA PUMPS, UDOR, 010201
26	GA5076380	OIL RESERVOIR, SUIT BETA / OMEGA PUMP, UDOR, 120349	57	160474	HEAD, ZETA, 160474
27	GA5076089	O RING, 60.33 X 3.53, 110168	58	GA5076562	BOLT, M10 X 75, DACROMET, UDOR, 1804A2
28	180571	ALLEN SCREW M6X30 UNI5931 DACROMET, 180571	59	GA5078301	BASE PLATE ZETA 230/260/300, 120298
29	GA5078304	BONDED WASHER D6,7X10X1, 141203	60	GA5076514	PLUG G1/4, 160367
30	0501H9	OIL RESERVOIR BASE, 0501H9	61	GA5075800	SEAL, RUBBER, 13 X 19 X 1.5, SUIT DIAPHRAGM PUMP OIL PLUG, UDOR, 060549
31	GA5076082	O-RING D12,37X2,62 (RIF.3050), 110156			

GA5054500 GOLDACRES	PUMP ZETA 260 MI-1	REV

Pump, MSP400, Breakdown

REPLACEMENT PARTS			
ITEM	PART NUMBER	DESCRIPTION	QTY
-	GA2000640	PUMP, (PUMP ONLY) MULTISTAGE CENTRIFUGAL, 2" FP FLANGE INLET, 2" SP FLANGE OUTLET, ARAG MP400	-

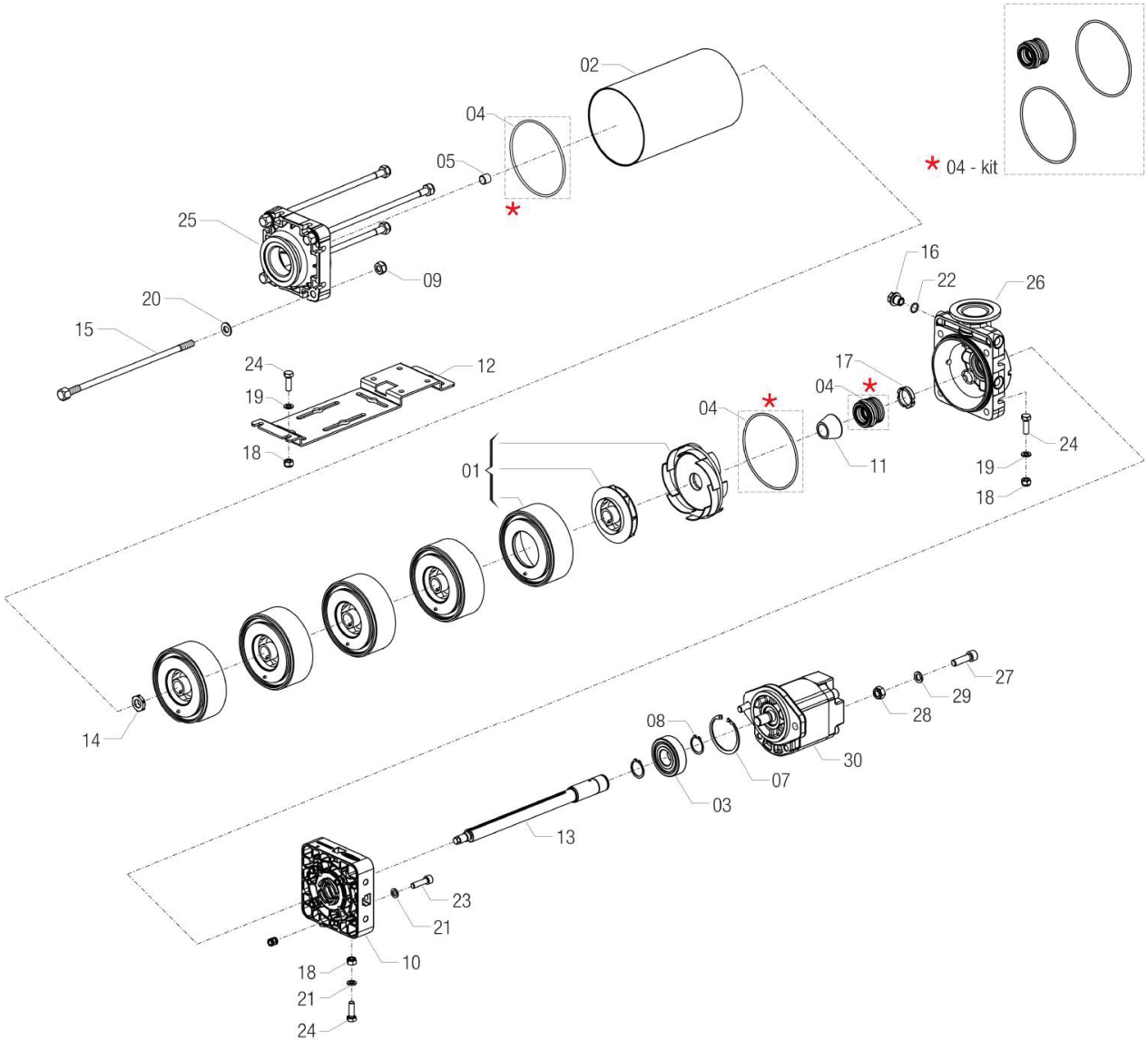

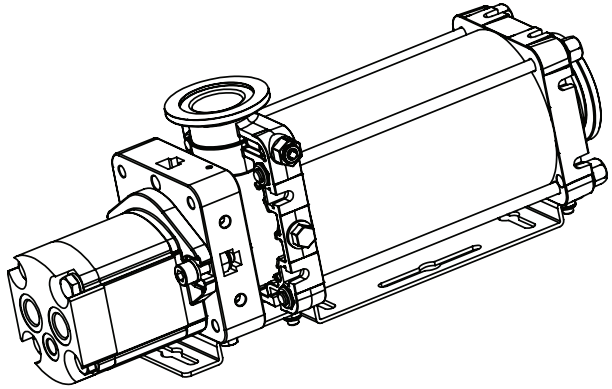

^ PARTS LIST ON FOLLOWING PAGE

GA2000123 GOLDACRES	PUMP, MULTISTAGE CENTRIFUGAL, HYDRAULIC DRIVE, 2" FP FLANGE INLET, 2" SP FLANGE OUTLET, ARAG MP400	REV 00

ARAG MSP400 PUMP

01	GA5073640	IMPELLER ASSEMBLY, HYDRAULIC PUMP, MP400/MSP400, ARAG, 970002.510	25	GA2000191	FLANGE, INLET, 220 2" FP, MP400, ARAG, 970000.145
02	GA2000182	PUMP TUBE COVER, MSP400, ARAG, 970050.04	26	GA5074345	T6F ADAPTOR HOUSING, PUMP, ARAG, MSP400
03	GA5078740	RADIAL BALL BEARING, 6305-2RS, SUIT, ARAG, MSP400, 970000.061	27	GA5078757	SCREW, TCEI, 10X35, INOX UNI5931, SUIT, ARAG, MSP400 PUMP, V1C26M
04	GA5073620	SEAL KIT, MECHANICAL SPRING SEAL AND 2 X MAIN HOUSING O RINGS, MP400 MSP400, ARAG, 970000.503	28	GA5078744	SELF-LOCKING NUT M10 INOX UNI7474, SUIT, ARAG, MSP400, B12261
05	GA2000183	SPACER, MSP400, ARAG, 970000.081	29	GA5078758	WASHER, GROVER, 10.5X17.5X2.2 INOX, SUIT, ARAG, MSP400 PUMP, B222J0
07	GA2000184	CIRCLIP INNER, MSP400, ARAG, B332Z2	30	GA5073645	PUMP MOTOR, HYDRAULIC PUMP, ARAG, 9700000.100, CASAPPA & WALVOIL BRANDS
08	GA2000185	CIRCLIP OUTER, MSP400, ARAG, B322X1		GA3501267	SEAL, OIL, 18 X 30 X 7mm, MSP400 MOTOR SHAFT, GA5073645, "CASAPPA BRAND ONLY"
09	GA5078744	SELF-LOCKING NUT M10 INOX UNI7474, SUIT, ARAG, MSP400, B12261	31	GA5078761	O-RING, 3,00X12,00, NBR, SUIT, ARAG, MSP400 PUMP, G11094NB
10	GA2000186	BEARING SUPPORT, MSP400, ARAG, 970000.06	32	GA5078763	DUST SEAL, SUIT, HYDRAULIC MOTOR, ARAG, MSP400 PUMP, 970000.062
11	GA5073625	BUSH, HYDRAULIC PUMP, MP400/MSP400, ARAG, 970000.080	33	GA5078762	STRAIGHT FITTING, G1/4"M AR D.8, SUIT, ARAG, MSP400 PUMP, 10320C08
12	GA5078745	BRACKET, FIXING, SUIT, ARAG, MSP400, 970050.090			
13	GA5078746	SHAFT, SUIT, ARAG, MSP400 PUMP, 5S COMPLETE, 970050.050			
14	GA5078747	BOLT, IMPELLER, TIGHTENING, SUIT, ARAG, MSP400, 970000.082			
15	GA5078748	FIXING SCREW, 10X268MM S/S, SUIT, ARAG, MSP400 PUMP, 970050.091			
16	GA5078749	PLUG, 1/4"M, SUIT, ARAG, MSP400 PUMP, 970000.084			
17	GA5073630	RETAINER SEAL, HYDRAULIC PUMP, MP400/MSP400, ARAG, 970000.083			
18	GA5078750	NUT, SELF LOCKING, M8, INOX UNI7474, SUIT, ARAG, MSP400 PUMP, B12251			
19	GA5078751	WASHER, FLAT, 8.4X15X1.5 INOX, SUIT, ARAG, MSP400 PUMP, B202H0			
20	GA5078752	WASHER, FLAT, D10.5X21X2, INOX, SUIT, ARAG, MSP400, B202J0			
21	GA5078753	WASHER, GROVER, D 8.2 INOX UNI1751, SUIT, ARAG, MSP400 PUMP, B222H0			
22	GA2000188	O-RING, 1.78 X 12.42 mm, VITON, MSP400, ARAG, G11015V			
23	GA5078755	SCREW, TCEI, 8X30, INOX UNI5931, SUIT, ARAG, MSP400 PUMP, V1C25L			
24	GA5078756	SCREW, TE, 8X25 INOX			

GA2000123 GOLDACRES	PUMP, MULTISTAGE CENTRIFUGAL, HYDRAULIC DRIVE, 2" FP FLANGE INLET, 2" SP FLANGE OUTLET, ARAG MSP400	REV 00

Hypro Fill Pump

REPLACEMENT PARTS			
ITEM	PART NUMBER	DESCRIPTION	QTY
-	GA2000146	PUMP, FILL, 3", HYDRAULICALLY DRIVEN, HYPRO	-
-	GA3501145	SEAL, KIT, FILL PUMP HYDRAULIC MOTOR, GA3500933, MODEL G6, "NO CASE DRAIN", ALM2A-S-16-S2-P696	-
-	GA3501661	SEAL, REPAIR KIT, FILL PUMP HYDRAULIC MOTOR, GA3500933, MARZOCCHI MODEL WITH CASE DRAIN, ALM2A-S-16-S2-E2-P696	-
-	GA2000403	SEAL KIT, COMPLETE, 3" FILL PUMP, GA2000146, 3430-0757	-
-	GA5018736	REPAIR KIT, SUIT WET END OF HYPRO LIQUID PUMP	-

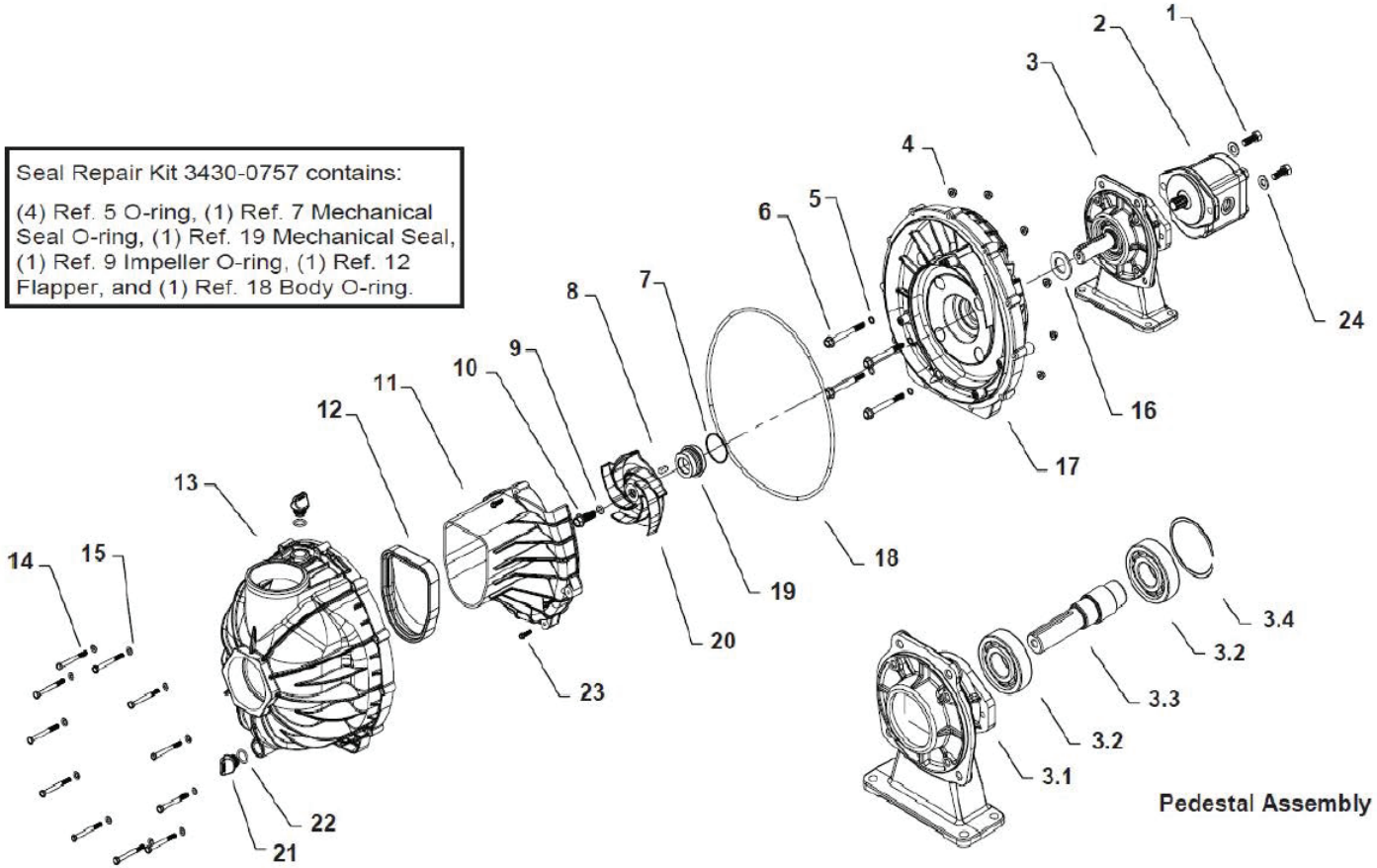

^ PARTS LIST ON FOLLOWING PAGE

GA2000146 GOLDACRES	HYPRO FILL PUMP, PARTS BREAKDOWN	REV 00

HYPRO FILL PUMP PART LIST

01	GA0500200	SHCS, 3/8 UNC X 1", SS	A	GA3501145	SEAL, REPAIR KIT, FILL PUMP HYDRAULIC MOTOR, GA3500933
02	GA3500933	HYDRAULIC MOTOR, 11.5CC, WITH CASE DRAIN, FILL PUMP, HYPRO	B	GA2000403	SEAL KIT, COMPLETE, 3" FILL PUMP, GA2000146, 3430-0757
03	GA5078785	PEDASTAL ASSY, SPLINE SHAFT, SUIT, HYPRO FILL PUMP, 9343 SERIES, 0751-9343	C	GA5018736	REPAIR KIT, SUIT WET END OF HYPRO LIQUID PUMP
04	GA5078786	FLANGE NUT, HEX, SUIT, HYPRO PUMP, SERIES 9343, 2250-0087			
05	GA2000403	SEAL KIT, COMPLETE, 3" FILL PUMP, GA2000146, 3430-0757			
06	GA5078788	BOLT, HEX FLANGE, SUIT, HYPRO PUMP, 9343 SERIES, 2210-0182			
07	GA2000403	SEAL KIT, COMPLETE, 3" FILL PUMP, GA2000146, 3430-0757			
08	GA5078790	KEY WAY, SUIT, HYPRO PUMP, SERIES 9343, 1610-0069			
09	GA2000403	SEAL KIT, COMPLETE, 3" FILL PUMP, GA2000146, 3430-0757			
10	GA5078792	BOLT, FLANGED HEX, SUIT, HYPRO PUMP, SERIES 9343, 2210-0181			
11	GA5078793	PUMP VOLUTE, SUIT, HYPRO PUMP, SERIES 9343, 0150-0154P			
12	GA2000403	SEAL KIT, COMPLETE, 3" FILL PUMP, GA2000146, 3430-0757			
13	GA2000328	HOUSING, FILL PUMP, FRONT, 3", PENTAIR			
14	GA5004097	BOLT M6 X 60 GR8.8 ZP			
15	GA5004437	WASHER M6 FLAT SS			
16	GA5078797	SLINGER RING, SUIT, HYPRO PUMP, SERIES 9343, 1410-0091			
17	GA2000329	HOUSING, FILL PUMP, REAR, 3", PENTAIR			
18	GA2000403	SEAL KIT, COMPLETE, 3" FILL PUMP, GA2000146, 3430-0757			
19	GA2000403	SEAL KIT, COMPLETE, 3" FILL PUMP, GA2000146, 3430-0757			
20	GA2000404	IMPELLER, 3" FILL PUMP, GA2000146, 0400-1543P			
21	GA5078800	FILL/DRAIN PLUG, SUIT, HYPRO PUMP, SERIES 9343, 2404-0350P			
22	GA5078801	O-RING, FILL PLUG, SUIT, HYPRO PUMP, SERIES 9343, 1720-0230			
23	GA5078802	WASHER, HEX, HEAD SCREW, SUIT, HYPRO PUMP, SERIES 9343, 2210-0183			
24	GA5002565	WASHER 3/8" X 1" FLAT SS			

GA2000146 GOLDACRES	HYPRO FILL PUMP, PARTS LIST	REV 00

Pump, ACE 650F, Hydraulic Drive, Parts Breakdown

REPLACEMENT PARTS			
ITEM	PART NUMBER	DESCRIPTION	QTY
-	GA5026376	REPAIR KIT, PUMP, ACE, SUIT, 650 WETSEAL MODELS, INCLUDES ITEMS 3, 5, 10 & LUBRICANT	-
-	GA5026377	SENSOR, RPM, SUIT, ACE PUMP, 650F SERIES	-
-	GA5026378	SEAL KIT, HYDRAULIC MOTOR WITH CASE DRAIN, ACE	-

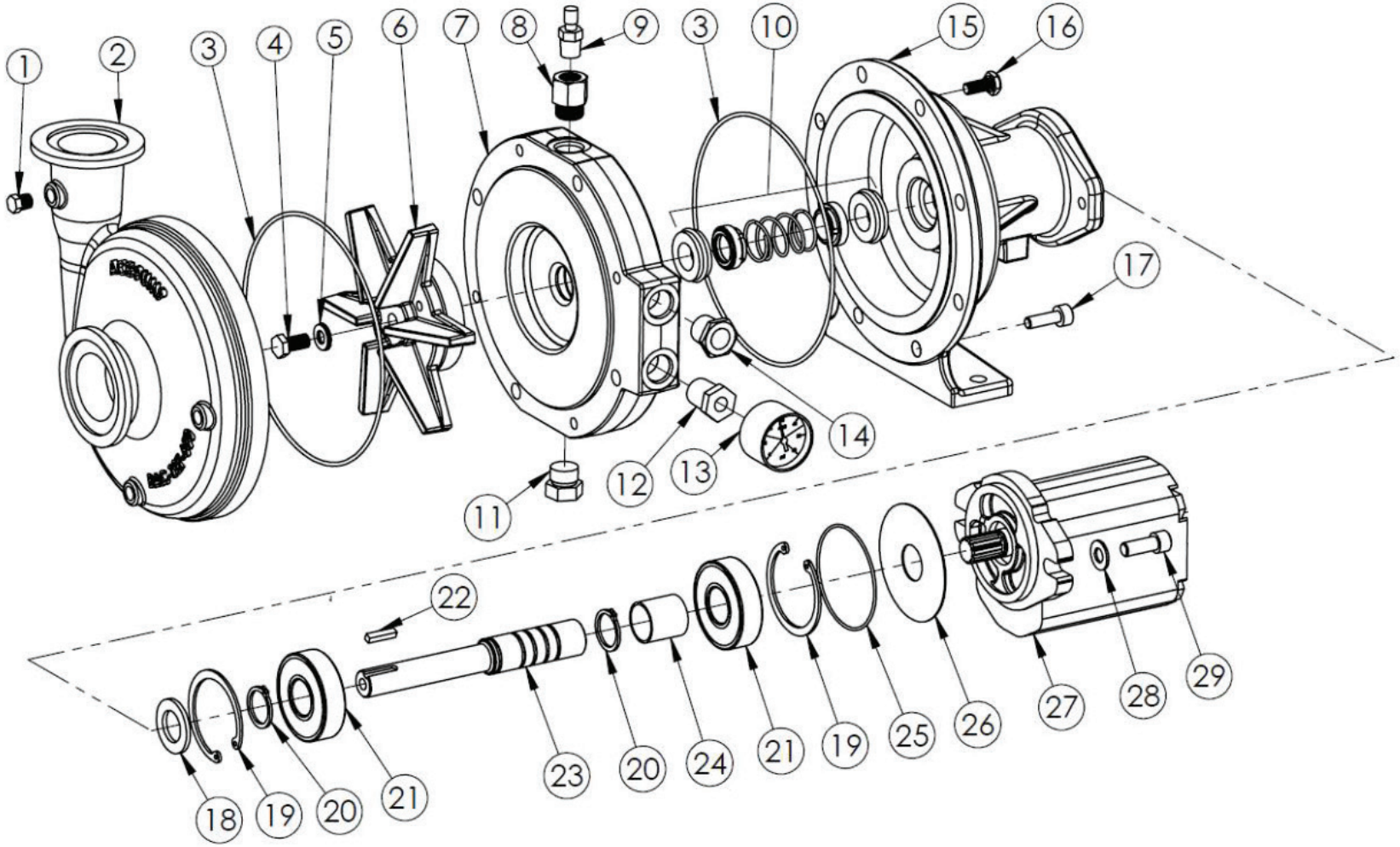

^PARTS LIST ON FOLLOWING PAGE

GA2000277 GOLDACRES	PUMP, CENTRIFUGAL, 644 LPM, OASIS RUN DRY SEAL, ACE	REV

ACE CENTRIFUGAL PUMP 650F OASIS SERIES					
1	GA5026391	PLUG, BRASS, 1/8", NPT, HEX HEAD	21	GA5026407	BEARING, PUMP, SHAFT, ACE 650 MODELS
2	GA5026392	VOLUTE, PUMP, ACE, NPT&220 FLANGE X NPTX200 FLANGE, SUIT, GA2000277	22	GA5026420	KEY, SHAFT, PUMP, ACE 650F
3	GA5026376	REPAIR KIT, PUMP, ACE, SUIT, 650 WETSEAL MODELS	23	GA5026421	SHAFT, PUMP, 11T FEMALE SPLINE, SS, ACE 650
4	GA5026393	SHCS, 3/8" UNC X 3/4", SS	24	GA5026422	SPACER, SHAFT, PUMP, ACE 650F
5	GA5026376	REPAIR KIT, PUMP, ACE, SUIT, 650 WETSEAL MODELS	25	GA5026424	O-RING, FLANGE, M SERIES, ACE 650
6	GA5026394	IMPELLER, ACE PUMP, CAST IRON, E-COATED, SUIT, GA2000277	26	GA5026425	PAD, ABSORBENT, M SERIES, ACE 650
7	GA5026397	PLATE, SEAL, CAST IRON, E-COATED, SUIT, ACE 650F, GA2000277	27	GA5026375	MOTOR, HYDRAULIC, WITH CASE DRAIN, SUIT, ACE 650F PUMP, 11.5CC
8	GA5026398	BUSH, #8 SAE X 1/4" FNTP, HEX, WITH O-RING	28	GA5002563	WASHER 3/8" X 7/8" FLAT SS
9	GA5026399	AIR VALVE, 1/4" NPT, ACE PUMP	29	GA0500200	SHCS 3/8 UNC X 1" SS
10	GA5026376	REPAIR KIT, PUMP, ACE, SUIT, 650 WETSEAL MODELS	-	GA5026376	REPAIR KIT, PUMP, ACE, SUIT, 650 WETSEAL MODELS
11	GA5026400	PLUG, HEX HEAD, #8 SAE, WITH O-RING	-	GA5026377	SENSOR, RPM, SUIT, ACE PUMP, 650F SERIES
12	GA5026401	BUSH, #8 SAE X 1/8" FNPT	-	GA5026378	SEAL KIT, HYDRAULIC MOTOR WITH CASE DRAIN, ACE
13	GA5026379	GAUGE, SUIT, ACE PUMP, 650 SERIES			
14	GA5026402	GAUGE, SIGHT, #8 SAE, WITH FLOAT, SUIT, GA2000277			
15	GA5026403	MOUNTING FRAME, PUMP, ACE 650F, CAST IRON, SUIT, GA2000277			
16	GA5026408	BOLT 3/8" UNC X 2" GR8 ZP			
17	GA0500200	SHCS 3/8 UNC X 1" SS			
18	GA5026404	SLINGER, 1.25" OD X .75" ID, EPDM, SUIT, GA2000277			
19	GA5026405	SNAP RING, INTERNAL, MOUNTING FRAME, ACE 650F, SUIT, GA2000277			
20	GA5026406	SNAP RING, EXTERNAL, SHAFT, ACE 650F, SUIT, GA2000277			

GA2000277 GOLDACRES	PUMP, CENTRIFUGAL, 644 LPM, OASIS RUN DRY SEAL, ACE	REV

Pump, Chemical, Breakdown

REPLACEMENT PARTS			
ITEM	PART NUMBER	DESCRIPTION	QTY
-	GA5079012	SERVICE KIT, MOTOR ASSEMBLY, SUIT, SOTERA CHEMICAL TRANSFER PUMP, GA5072100	-
-	GA5079013	SERVICE KIT, PUMP, SUIT, SOTERA CHEMICAL TRANSFER PUMP, 400B SERIES, GA5072100	-

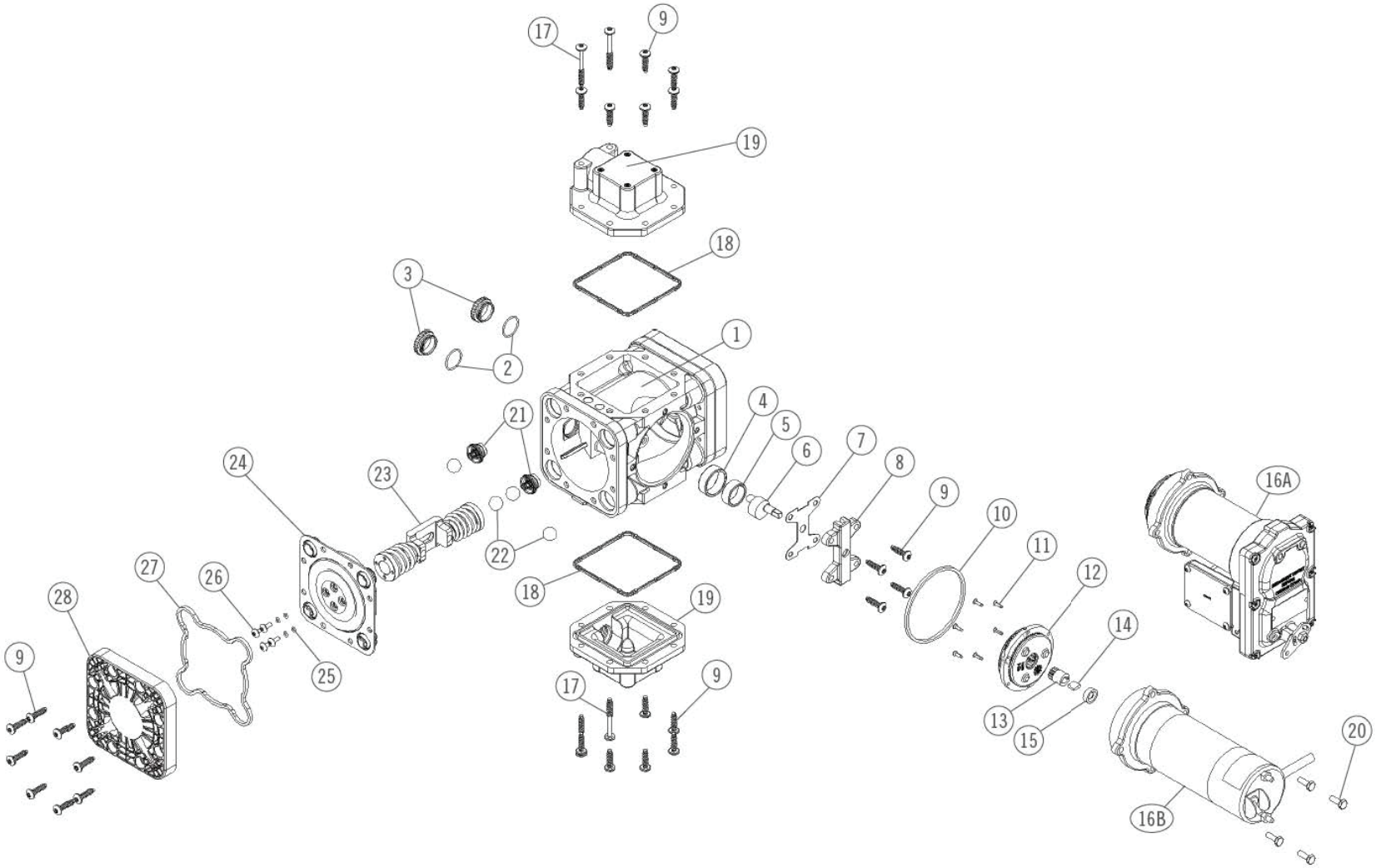

CONTINUE OVER PAGE

GA5072100 GOLDACRES	CHEMICAL PUMP, SOTERA, 400B, INTERNAL PARTS BREAKDOWN	REV

SOTERA CHEMICAL PUMP

ITEM	PART NUMBER	DESCRIPTION	ITEM	PART NUMBER	DESCRIPTION
1	N/A	HOUSING, PUMP BODY, SOTERA, CHEMICAL PUMP, 400B	25	GA5079137	O-RING, EPDM, -007, SUIT, SOTERA, CHEMICAL PUMP, 400B, 400G8887
2	GA5079114	O-RING, NITRILE, -02, SUIT, SOTERA, CHEMICAL PUMP, 400B, 400F6813	26	GA5079138	SCREW, PHM, 10-24 X 1.5 LG, SUIT, SOTERA, CHEMICAL PUMP, 400B, 400F6795
3	GA5079115	SIGHT CAP, SUIT, SOTERA, CHEMICAL PUMP, 400B, 400F6818	27	GA5079139	GASKET, DIAPHRAGM COVER, SUIT, SOTERA, CHEMICAL PUMP, 400B, 400H1164
4	GA5079116	RING, BEARING, SUIT, SOTERA, CHEMICAL PUMP, 400B, 400F6827	28	GA5079140	COVER, DIAPHRAGM, SUIT, SOTERA, CHEMICAL PUMP, 400B, 400H1154
5	GA5079117	BRUSHING, 1.250 OD X 1.00 ID, SUIT, SOTERA, CHEMICAL PUMP, 400B, 400F6819	KIT BREAKDOWN (GA5079012)		
6	GA5079118	DRIVE SHAFT, SUIT, SOTERA, CHEMICAL PUMP, 400B, 400F6800	16A	GA5079128	MOTOR ASSEMBLY, 12V, EXPLOSION PROOF, SUIT, SOTERA, CHEMICAL PUMP, 400B, 400EXPF6846
7	GA5079119	THRUST PLATE, SUIT, SOTERA, CHEMICAL PUMP, 400B, 400F6880	12	GA5079124	GEAR PACK ASSEMBLY, SUIT, SOTERA, CHEMICAL PUMP, 400B, 400F6557
8	GA5079120	BEARING PLATE, SUIT, SOTERA, CHEMICAL PUMP, 400B, 400F6579	13	GA5079125	DRIVE GEAR, SUIT, SOTERA, CHEMICAL PUMP, 400B, 400F6563
9	GA5079121	SCREW, 1/4 - 10 X 1.00 PTS-SS, SUIT, SOTERA, CHEMICAL PUMP, 400B, 400G9685	14	GA5079126	KEY, ROTOR, SUIT, SOTERA, CHEMICAL PUMP, 400B, 1200F6440
10	GA5079122	O-RING, LATHE CUT, ,NITRILE, SUIT, SOTERA, CHEMICAL PUMP, 400B, 400F6692	KIT BREAKDOWN (GA5079013)		
11	GA5079123	SCREW, 6-32, FLAT HEAD, TRILOBULAR, SUIT, SOTERA, CHEMICAL PUMP, 400B, 400G7494	10	GA5079122	O-RING, LATHE CUT, ,NITRILE, SUIT, SOTERA, CHEMICAL PUMP, 400B, 400F6692
12	GA5079124	GEAR PACK ASSEMBLY, SUIT, SOTERA, CHEMICAL PUMP, 400B, 400F6557	11	GA5079123	SCREW, 6-32, FLAT HEAD, TRILOBULAR, SUIT, SOTERA, CHEMICAL PUMP, 400B, 400G7494
13	GA5079125	DRIVE GEAR, SUIT, SOTERA, CHEMICAL PUMP, 400B, 400F6563	12	GA5079124	GEAR PACK ASSEMBLY, SUIT, SOTERA, CHEMICAL PUMP, 400B, 400F6557
14	GA5079126	KEY, ROTOR, SUIT, SOTERA, CHEMICAL PUMP, 400B, 1200F6440	13	GA5079125	DRIVE GEAR, SUIT, SOTERA, CHEMICAL PUMP, 400B, 400F6563
15	GA5079127	SEAL, LIP, SHAFT, SUIT, SOTERA, CHEMICAL PUMP, 400B, 400G9104	14	GA5079126	KEY, ROTOR, SUIT, SOTERA, CHEMICAL PUMP, 400B, 1200F6440
16A	GA5079128	MOTOR ASSEMBLY, 12V, EXPLOSION PROOF, SUIT, SOTERA, CHEMICAL PUMP, 400B, 400EXPF6846	18	GA5079130	FLANGE GASKET, EPDM, SUIT, SOTERA, CHEMICAL PUMP, 400B, 400F6924
17	GA5079129	SCREW, 1/4 - 10 X 2.25 PTS-SS, SUIT, SOTERA, CHEMICAL PUMP, 400B, 400G9685	21	GA5079133	CHECK VALVE, OUTLET, SUIT, SOTERA, CHEMICAL PUMP, 400B, 400G7163
18	GA5079130	FLANGE GASKET, EPDM, SUIT, SOTERA, CHEMICAL PUMP, 400B, 400F6924	22	GA5079134	BALL, POLYETHYLENE, SUIT, SOTERA, CHEMICAL PUMP, 400B, 400F6574
19	GA5079131	FLANGE, 90°, WITH INSERTS, SUIT, SOTERA, CHEMICAL PUMP, 400B, 400F6569	24	GA5079136	DIAPHRAGM ASSEMBLY, SANTOPRENE, GREEN, SUIT, SOTERA, CHEMICAL PUMP, 400B, 400H1178
20	GA5079132	SCREW, 1/4 - 20 X .750 LG, SUIT, SOTERA, CHEMICAL PUMP, 400B, 400F6792	25	GA5079137	O-RING, EPDM, -007, SUIT, SOTERA, CHEMICAL PUMP, 400B, 400G8887
21	GA5079133	CHECK VALVE, OUTLET, SUIT, SOTERA, CHEMICAL PUMP, 400B, 400G7163	26	GA5079138	SCREW, PHM, 10-24 X 1.5 LG, SUIT, SOTERA, CHEMICAL PUMP, 400B, 400F6795
22	GA5079134	BALL, POLYETHYLENE, SUIT, SOTERA, CHEMICAL PUMP, 400B, 400F6574	28	GA5079140	COVER, DIAPHRAGM, SUIT, SOTERA, CHEMICAL PUMP, 400B, 400H1154
23	GA5079135	YOKE ASSEMBLY, SUIT, SOTERA, CHEMICAL PUMP, 400B, 400F6781			
24	GA5079136	DIAPHRAGM ASSEMBLY, SANTOPRENE, GREEN, SUIT, SOTERA, CHEMICAL PUMP, 400B, 400H1178			

GA5072100 GOLDACRES	CHEMICAL PUMP, SOTERA, 400B, INTERNAL PARTS BREAKDOWN	REV

05 - Tanks

Main Tank , 4000L

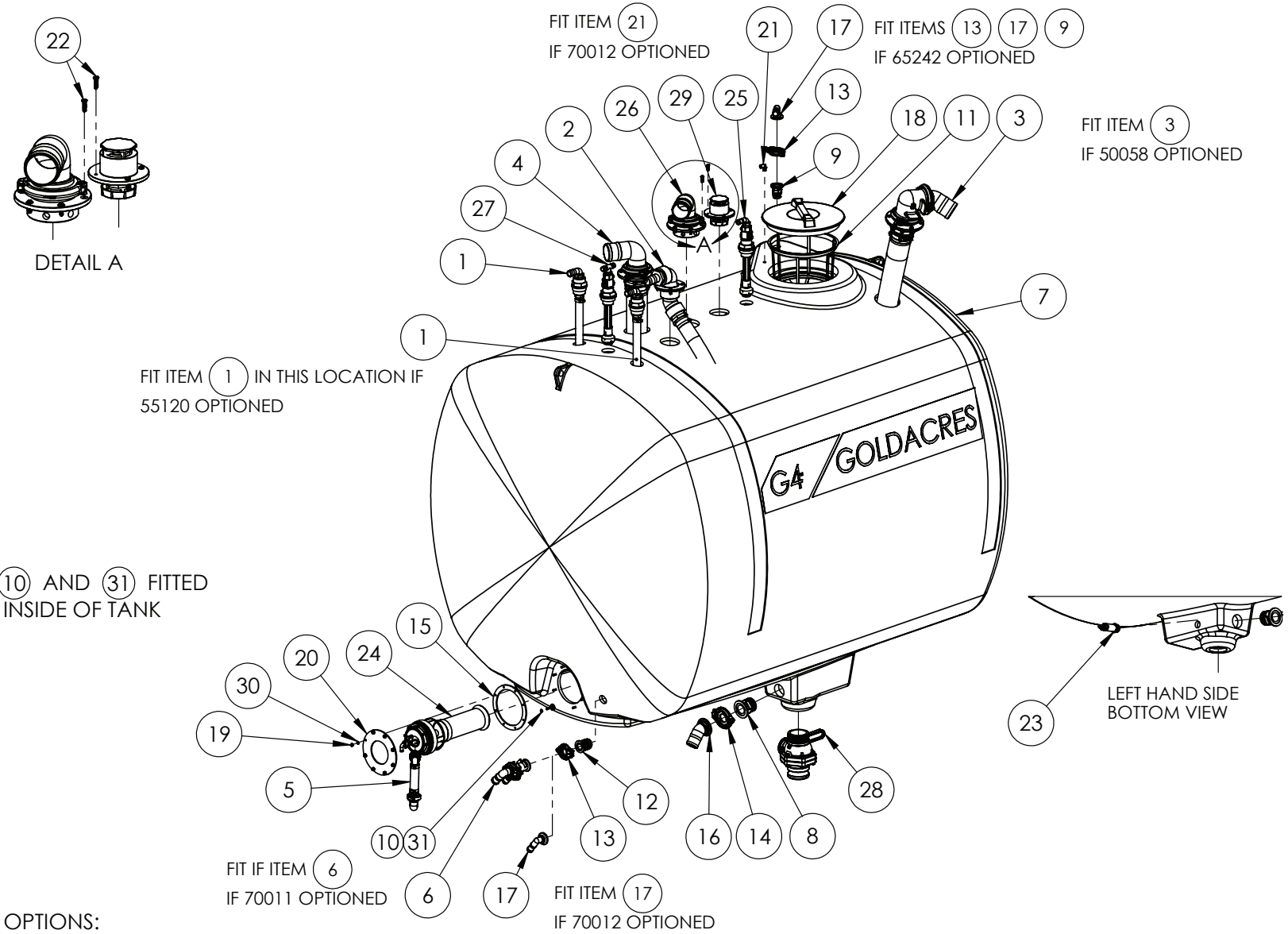

BUILD OPTIONS:
50058 - 3" SEPERATE FRONT FILL
55120 - CHEMICAL TRANSFER PUMP
65242 - WEEDETECT BILBERRY USING 3TS 250mm 16 SECTIONS 36M BOOM
65241 - WEEDETECT BILBERRY TO SUIT HAWKEYE 2 36m BOOM
70011 - DIAPHRAGM PUMP
70012 - CENTRIFUGAL PUMP

CONTINUE OVER PAGE

GA6101710 GOLDACRES	TANK ASSEMBLY, CONFIG, 4000L, G4 S2, MY24	REV 02

Main Tank , 4000L

IF DESCRIPTION PREFIX IS ASSEMBLY DRAWING ONLY OR PRODUCTION DRAWING ONLY THE ITEM IS NOT FOR SALE			
ITEM	PART NUMBER	DESCRIPTION	QTY
1	GA4909035	ASSEMBLY DRAWING ONLY, TANK, INLET, 1" HOSE	2
2	GA4909045	ASSEMBLY DRAWING ONLY, 2" INLET, HOPPER, 45°	1
3	GA4914195	ASSEMBLY DRAWING ONLY, 3" FILL ASSY, G4, OPTION 50058	1
4	GA4914190	ASSEMBLY DRAWING ONLY, 3" FILL, G4	1
5	GA4954160	ASSEMBLY DRAWING ONLY. AGITATOR RETURN HOSE EXTENSION G4 S2 MY24	1
6	GA4954155	ASSEMBLY DRAWING ONLY. FLUSH AND REFILL OPTION 70011 G4 S2 MY24	1
7	GA4952720	ASSEMBLY DRAWING ONLY. TANK 4000L, DRILLING GUIDE, G4 S2, MY24	1
8	GA5077839	CONNECTOR, MANIFOLD, 2", MALE, M200BSP	1
9	GA5077820	COUPLING, FLANGED, 1 FLANGE X 1 MALE THREAD, BANJO	1
10	GA0500205	FANG BOLT M6 X 35 SS	8
11	GA5076714	FILTER, BASKET TYPE, DIAMETER 305 X 245 DEEP, SUIT MAIN SPRAY TANK	1
12	GA5077808	FLANGE 1" X 1 1/4" MALE THREAD	1
13	GA2000113	FLANGE CLAMP, AND GASKET, 1", SERIES 100, HYPRO	2
14	GA2000114	FLANGE CLAMP, AND GASKET, 1.5", SERIES 200, HYPRO	1
15	GA5026440	GASKET, EPDM, SUPERMIX AGITATOR MOUNT, MY25	1
16	GA2000433	HOSE BARB, ELBOW, 45 DEGREE, 2 FLANGE X 2 HOSE, BANJO, M200BRB45	1

IF DESCRIPTION PREFIX IS ASSEMBLY DRAWING ONLY OR PRODUCTION DRAWING ONLY THE ITEM IS NOT FOR SALE			
ITEM	PART NUMBER	DESCRIPTION	QTY
17	GA5077812	HOSE BARB, ELBOW, 90 DEGREE, 1 FLANGE X 1 HOSE, BANJO	2
18	GA5076880	LID, BLACK, WITHOUT BREATHER, MEDIUM, DIAMETER 355, ARAG	1
19	GA5004429	NUT M6 NYLOC SS	8
20	GA4000787	PLATE, SUPER MIX AGITATOR MOUNT, FLANGE BRACKET, ALL, MY25	1
21	GA5052690	PNEUMATIC FITTING, ELBOW, 90 DEGREE, 1/4 BSP MALE X 8mm PUSH TYPE, METAL	1
22	GA5000527	SCREW PAN HEAD 12G X 25mm SS	10
23	GA3001158	SENSOR, PRESSURE TRANSMITTER, 4-20MA, 1" M, 0 TO 0.4 BAR, M12, IFM PM1718	1
24	GA4908705	SUPER MIX AGITATOR ASSEMBLY, NO BYPASS FITTING.	1
25	GA4901285-1	TANK, FLUSHING NOZZLE (ELBOW) CAM ADAPTOR	1
26	GA4907845	TANK, OVERFLOW, ASSEMBLY, 3"	1
27	GA4901285-2	TANK, RINSING NOZZLE, ASSEMBLY WITH TEE CAM ADAPTOR	1
28	GA5078204	VALVE, BALL, 3", MALE NPT, MALE CAM LOCK, STUBBLY, LONG HANDLE, BANJO, VSFMT300	1
29	GA4902820	VALVE, BREATHER, ASSEMBLY	1
30	GA5004437	WASHER M6 FLAT SS HD	8
31	GA5026590	WASHER M6 NEOPRENE	8

GA6101710 GOLDACRES	TANK ASSEMBLY, CONFIG, 4000L, G4 S2, MY24	REV 02

Tank, 4000L Drilling Guide (Top)

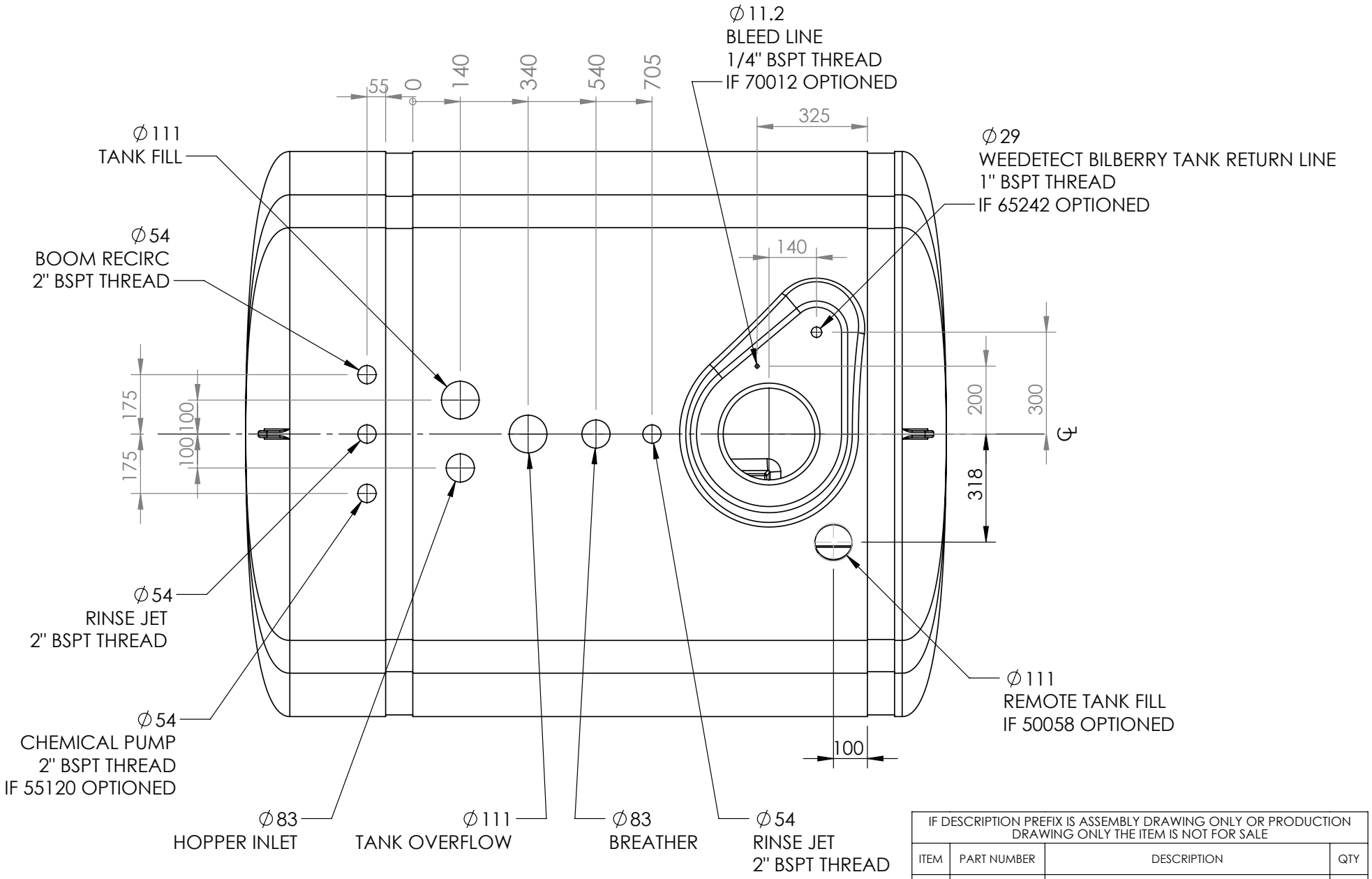

IF DESCRIPTION PREFIX IS ASSEMBLY DRAWING ONLY OR PRODUCTION DRAWING ONLY THE ITEM IS NOT FOR SALE			
ITEM	PART NUMBER	DESCRIPTION	QTY
1	GA5071165	TANK, 4000L, G4, BARE	1
GA4952720 GOLDACRES		ASSEMBLY DRAWING ONLY. TANK 4000L, DRILLING GUIDE, G4 S2, MY24	REV 01

Tank, 4000L Drilling Guide (Bottom)

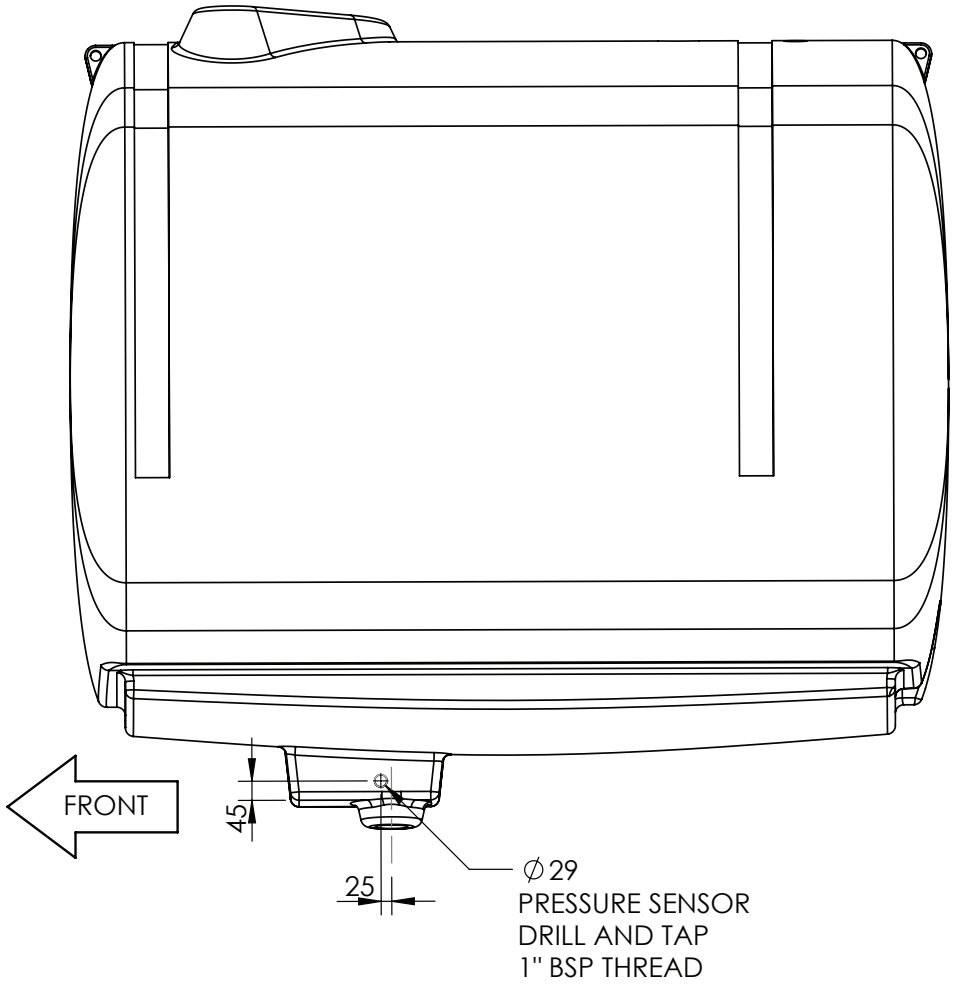

LEFT HAND SIDE VIEW

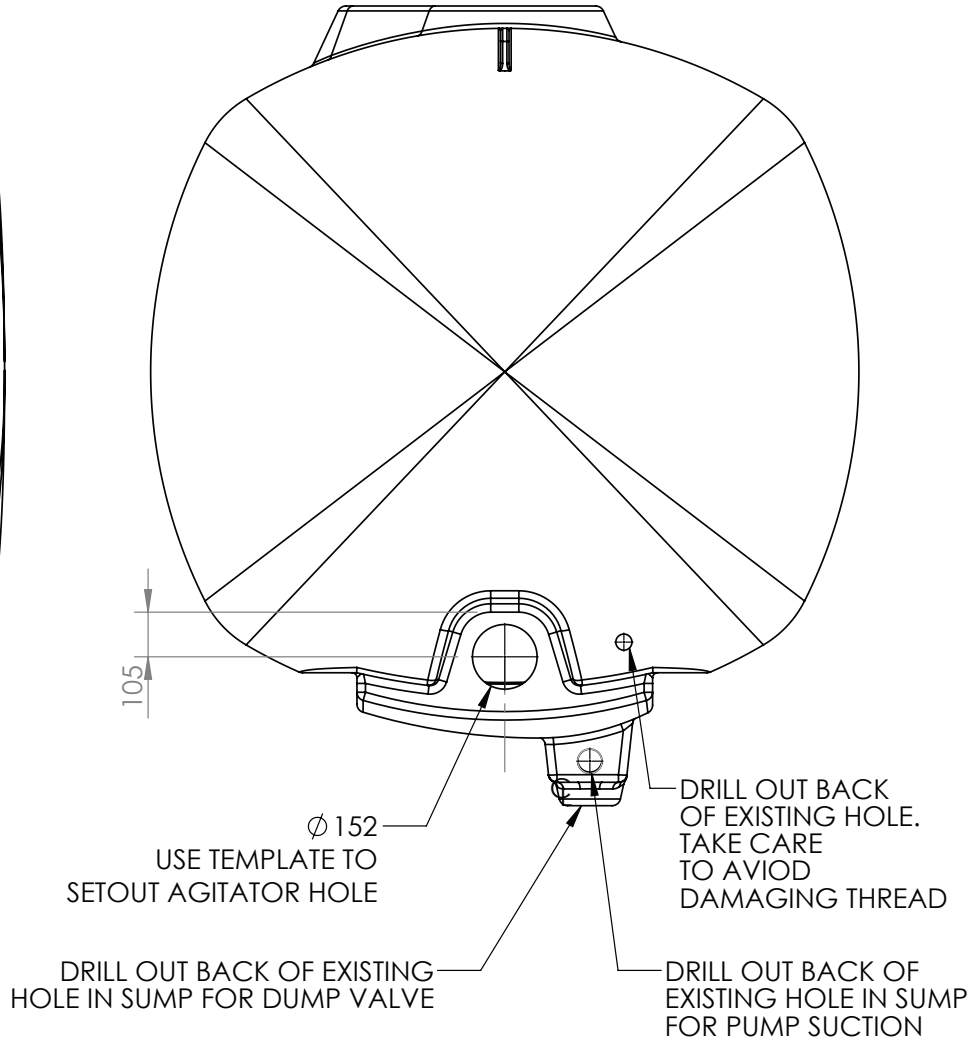

GA4952720 GOLDACRES	ASSEMBLY DRAWING ONLY. TANK 4000L, DRILLING GUIDE, G4 S2, MY24	REV 01

Tank Inlet, 1”

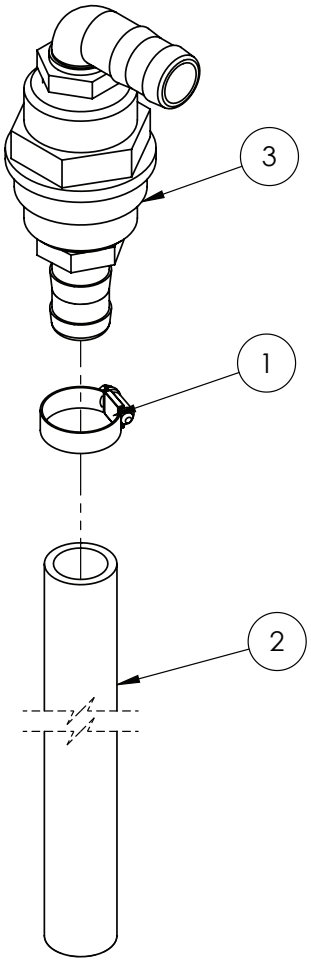

IF DESCRIPTION PREFIX IS ASSEMBLY DRAWING ONLY OR PRODUCTION DRAWING ONLY THE ITEM IS NOT FOR SALE			
ITEM	PART NUMBER	DESCRIPTION	QTY
1	GA5001681	HOSE CLAMP, 1" SS (20-32/12W)	1
2	GA2000220	HOSE, SUCTION, PVC, 25mm, BLACK, HOS25PVC, SOLD PER METER	1.3
3	GA4922140	TANK, INLET, 1", CHEMICAL FILL POINT	1
GA4909035 GOLDACRES		ASSEMBLY DRAWING ONLY, TANK, INLET, 1" HOSE	REV 02

Tank Inlet Assembly, 1”

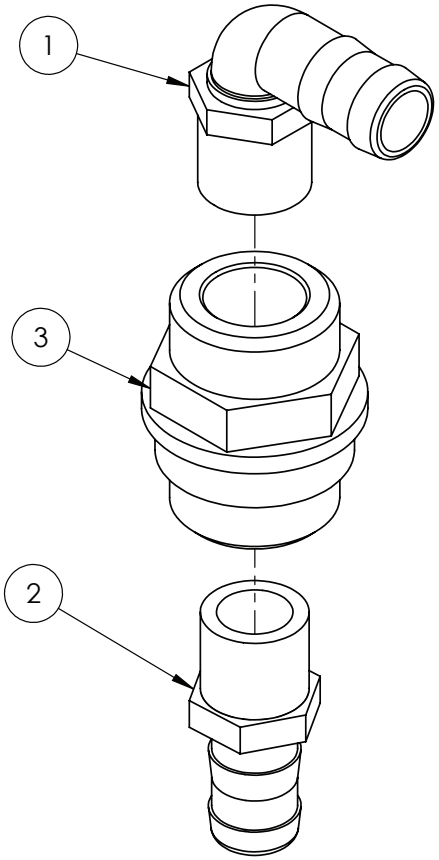

IF DESCRIPTION PREFIX IS ASSEMBLY DRAWING ONLY OR PRODUCTION DRAWING ONLY THE ITEM IS NOT FOR SALE			
ITEM	PART NUMBER	DESCRIPTION	QTY
1	GA5077723	HOSE BARB, ELBOW, 90 DEGREE, 1" MALE X 1" HOSE, BANJO	1
2	GA5077718	HOSE BARB, STRAIGHT, 1 MALE THREAD X 1 HOSE, BANJO	1
3	GA4572395	MAIN TANK LINE RETURN FITTING 1"	1
GA4922140 GOLDACRES		TANK, INLET, 1", CHEMICAL FILL POINT	REV 01

Tank Inlet, 2”

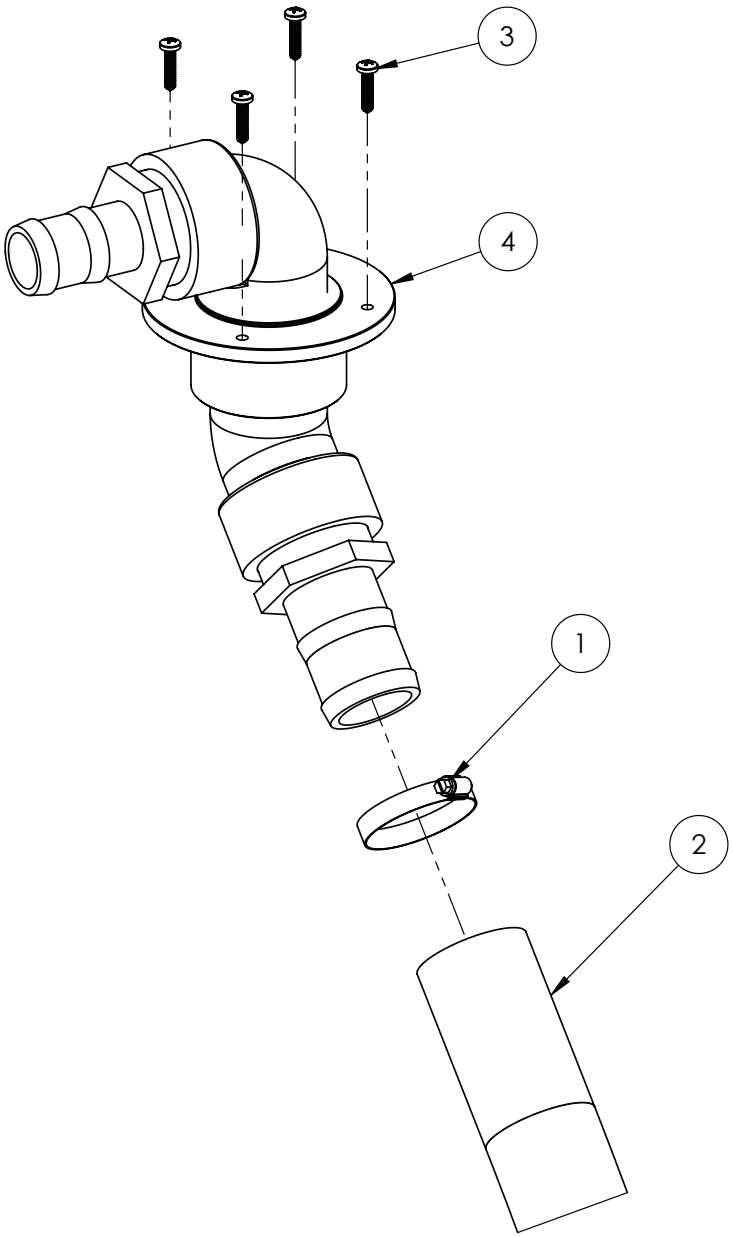

IF DESCRIPTION PREFIX IS ASSEMBLY DRAWING ONLY OR PRODUCTION DRAWING ONLY THE ITEM IS NOT FOR SALE			
ITEM	PART NUMBER	DESCRIPTION	QTY
1	GA5003325	HOSE CLAMP 2" SS (40-60/12W)	1
2	GA2000228	HOSE, SUCTION, PVC, 50mm, BLACK, HOS50PVC, SOLD PER METER	1.2
3	GA5000527	SCREW PAN HEAD 12G X 25mm SS	4
4	GA4904815	TANK, INLET FLANGE ASSEMBLY, HOPPER, MODIFIED 45 DEGREE ELBOW	1
GA4909045 GOLDACRES		ASSEMBLY DRAWING ONLY, 2" INLET, HOPPER, 45°	REV 01

Tank Inlet Assembly, 2”

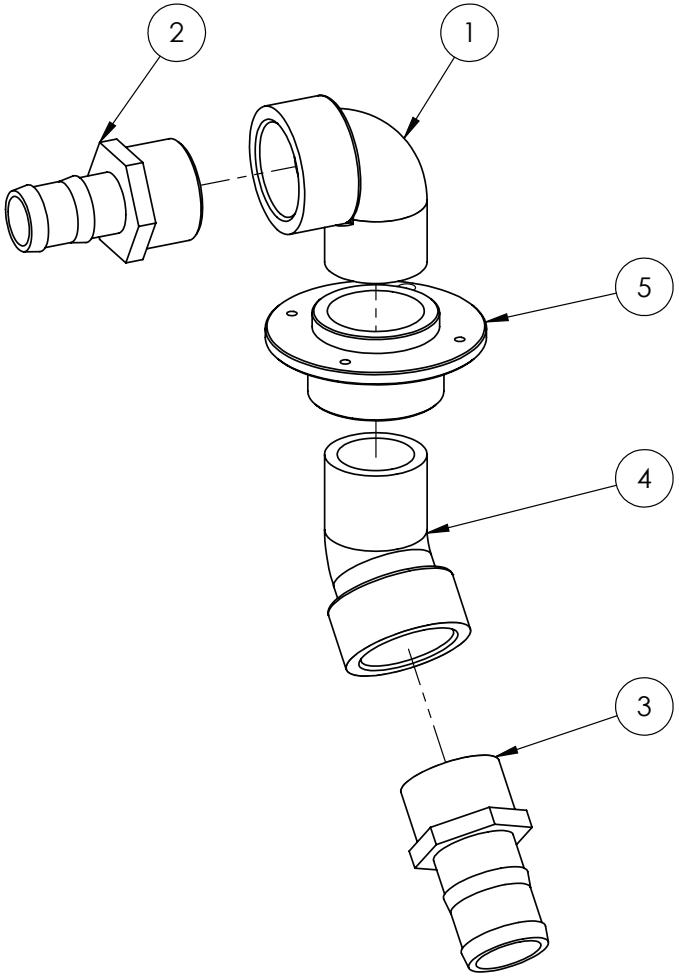

IF DESCRIPTION PREFIX IS ASSEMBLY DRAWING ONLY OR PRODUCTION DRAWING ONLY THE ITEM IS NOT FOR SALE			
ITEM	PART NUMBER	DESCRIPTION	QTY
1	GA5078142	2" POLY STREET ELBOW-90 DEGREE	1
2	GA5077739	HOSE BARB, STRAIGHT, 2" MALE THREAD X 1 1/2" HOSE, BANJO, HB200-150	1
3	GA5077737	HOSE BARB, STRAIGHT, 2" MALE THREAD X 2" HOSE, BANJO, HB200	1
4	GA5078141	STREET ELBOW, 45 DEGREE, 2 MALE THREAD X 2 FEMALE THREAD, BANJO	1
5	GA4583370	THREADED TANK FLANGE 2"	1
GA4904815 GOLDACRES		TANK, FILL INLET 2", 45 DEGREE	REV 06

Tank Inlet, Front Fill, 3”

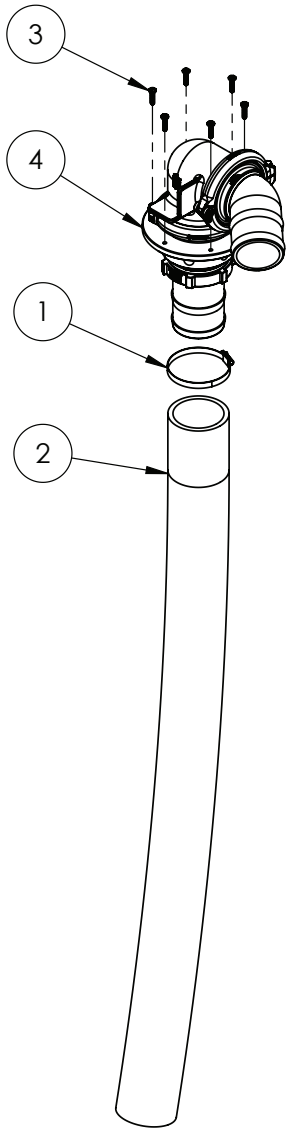

IF DESCRIPTION PREFIX IS ASSEMBLY DRAWING ONLY OR PRODUCTION DRAWING ONLY THE ITEM IS NOT FOR SALE			
ITEM	PART NUMBER	DESCRIPTION	QTY
1	GA5003835	HOSE CLAMP 3" SS (70-90/12W3)	1
2	GA2000231	HOSE, SUCTION, PVC, 75mm, BLACK, HOS75PVC, SOLD PER METER	1.2
3	GA5000527	SCREW PAN HEAD 12G X 25mm SS	6
4	GA4907850	TANK FRONT FILL, ASSEMBLY, 3"	1
GA4914195 GOLDACRES		ASSEMBLY DRAWING ONLY, 3" FILL ASSY, G4, OPTION 50058	REV 01

Tank Inlet Assembly, Front Fill, 3”

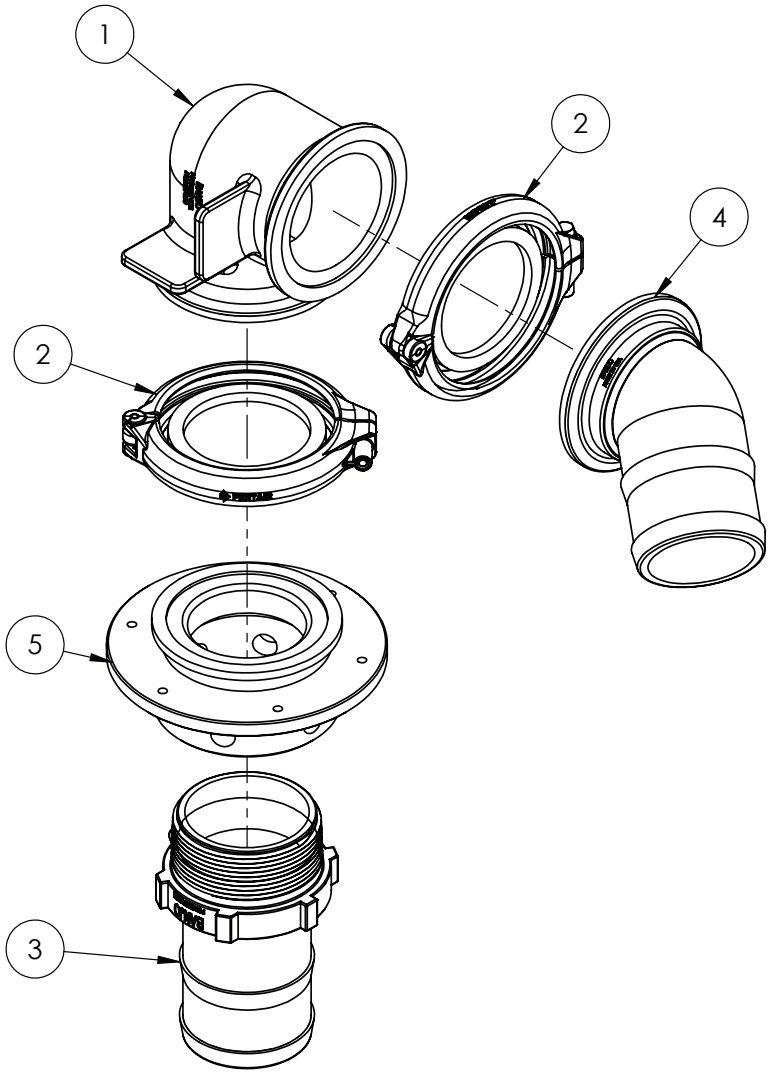

IF DESCRIPTION PREFIX IS ASSEMBLY DRAWING ONLY OR PRODUCTION DRAWING ONLY THE ITEM IS NOT FOR SALE			
ITEM	PART NUMBER	DESCRIPTION	QTY
1	GA5077877	3" FLANGE X 3"FLANGE-90 DEGREE	1
2	GA2000116	FLANGE CLAMP, AND GASKET, 3", SERIES 300, HYPRO	2
3	GA5077741	HOSE BARB, STRAIGHT, 3 MALE THREAD X 3 HOSE, BANJO	1
4	GA5077874	MANIFOLD HOSE BARB 3", 45 DEGREE, M300BRB45	1
5	GA4550590	TANK TOP INLET FITTING, 3" BANJO FLANGE AND 3" NPT FEMALE THREAD	1
GA4907850 GOLDACRES		TANK FRONT FILL, ASSEMBLY, 3"	REV 01

Tank inlet, 3”

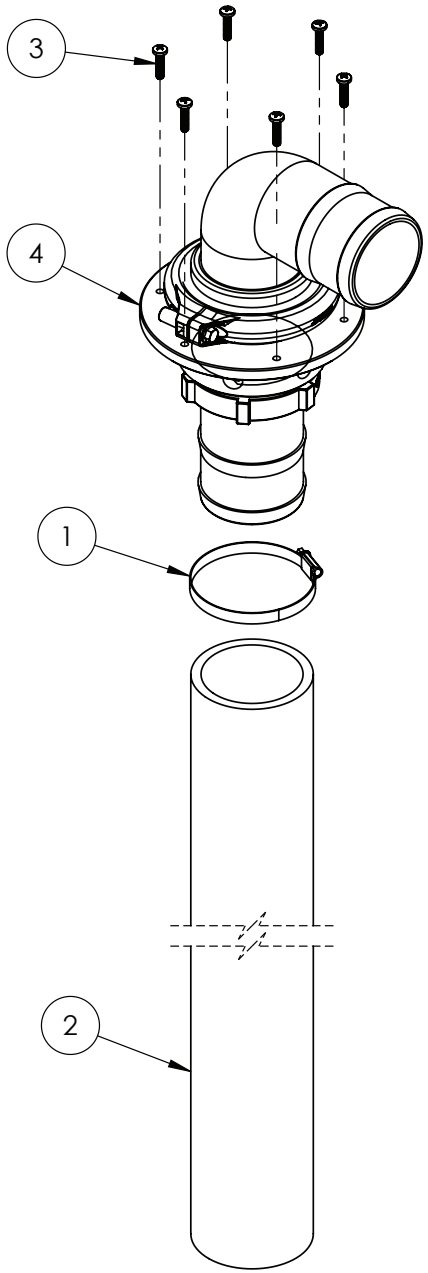

IF DESCRIPTION PREFIX IS ASSEMBLY DRAWING ONLY OR PRODUCTION DRAWING ONLY THE ITEM IS NOT FOR SALE			
ITEM	PART NUMBER	DESCRIPTION	QTY
1	GA5003835	HOSE CLAMP 3" SS (70-90/12W3)	1
2	GA2000231	HOSE, SUCTION, PVC, 75mm, BLACK, HOS75PVC, SOLD PER METER	1.2
3	GA5000527	SCREW PAN HEAD 12G X 25mm SS	6
4	GA4907840	TANK INLET, ASSEMBLY, 3"	1
GA4914190 GOLDACRES		ASSEMBLY DRAWING ONLY, 3" FILL ASSY, G4	REV 01

Tank Inlet Assembly, 3”

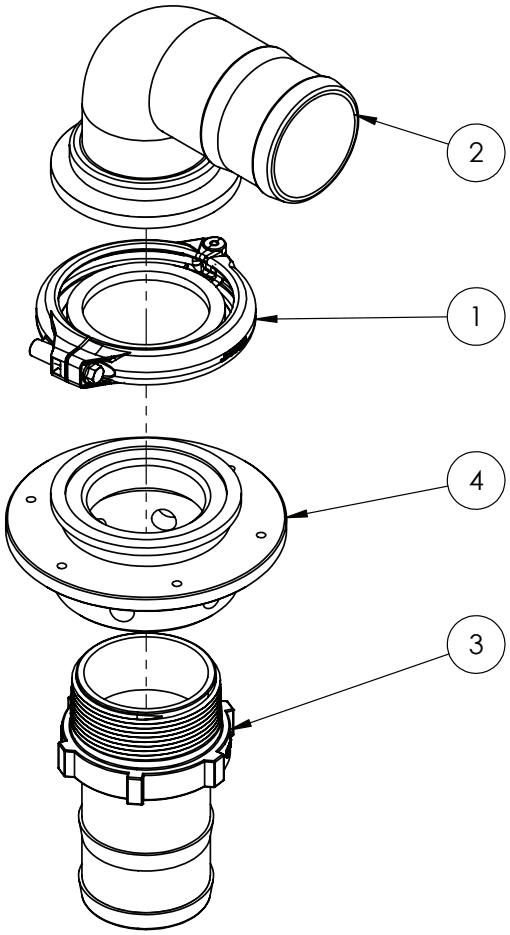

IF DESCRIPTION PREFIX IS ASSEMBLY DRAWING ONLY OR PRODUCTION DRAWING ONLY THE ITEM IS NOT FOR SALE			
ITEM	PART NUMBER	DESCRIPTION	QTY
1	GA2000116	FLANGE CLAMP, AND GASKET, 3", SERIES 300, HYPRO	1
2	GA5077875	HOSE BARB, ELBOW, 90 DEGREE, 3 FLANGE X 3 HOSE, BANJO, M300BRB90	1
3	GA5077741	HOSE BARB, STRAIGHT, 3 MALE THREAD X 3 HOSE, BANJO	1
4	GA4550590	TANK TOP INLET FITTING, 3" BANJO FLANGE AND 3" NPT FEMALE THREAD	1
GA4907840 GOLDACRES		TANK INLET, ASSEMBLY, 3"	REV 01

Agitator Return Assembly

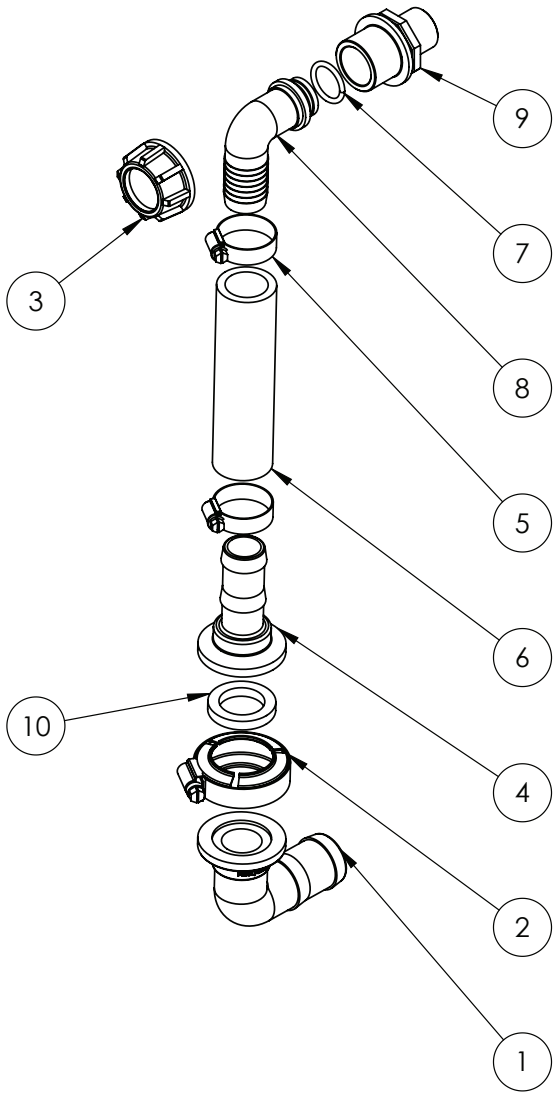

IF DESCRIPTION PREFIX IS ASSEMBLY DRAWING ONLY OR PRODUCTION DRAWING ONLY THE ITEM IS NOT FOR SALE			
ITEM	PART NUMBER	DESCRIPTION	QTY
1	GA5077807	1" FLANGE X 1 1/4" BARB, ELBOW, 90 DEGREE, M100125BRB90	1
2	GA5077664	CLAMP, WORM SCREW, 1", BANJO	1
3	GA5076602	FLY NUT, 1, ARAG, 2002040	1
4	GA5077811	HOSE BARB, STRAIGHT, 1 FLANGE X 1 HOSE, BANJO	1
5	GA5001681	HOSE CLAMP, 1" SS (20-32/12W)	2
6	GA2000219	HOSE, PRESSURE, 25mm, BLACK 250PSI, HOS25P, SOLD PER METER	0.13
7	GA5077675	O RING, 20.24 X 2.62, EPDM, G10041	1
8	GA5078296	PLUMBING FITTING, HOSE TAIL 1", ELBOW, 90 DEGREE, 25mm, SUIT FLY NUT, ARAG 116425	1
9	GA5078324	REDUCER, MALE 1" TO MALE 3/4", ARAG, 2402043	1
10	GA5077818	SEAL, SUIT 1 MANIFOLD FITTING, RUBBER EPDM, BANJO, M100G	1
GA4954160 GOLDACRES		ASSEMBLY DRAWING ONLY. AGITATOR RETURN HOSE EXTENSION G4 S2 MY24	REV 01

Flush & Refill Assembly

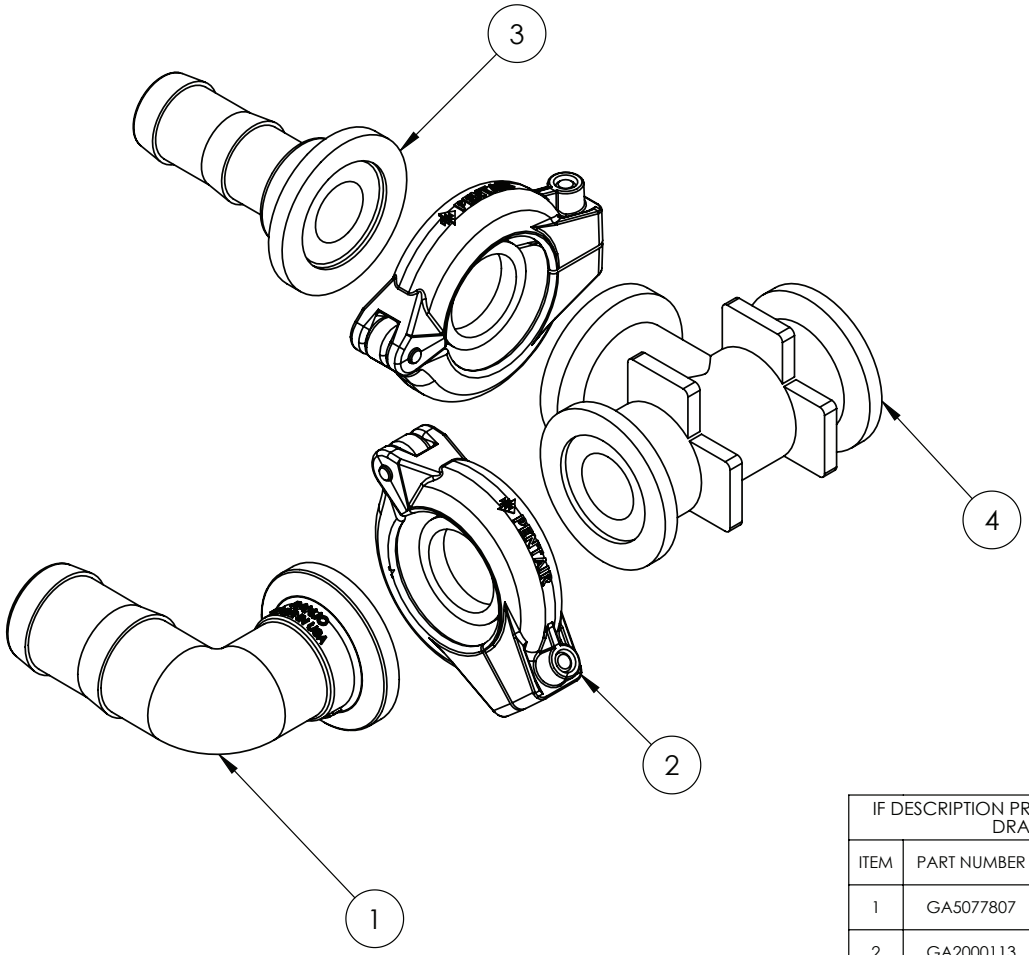

IF DESCRIPTION PREFIX IS ASSEMBLY DRAWING ONLY OR PRODUCTION DRAWING ONLY THE ITEM IS NOT FOR SALE			
ITEM	PART NUMBER	DESCRIPTION	QTY
1	GA5077807	1" FLANGE X 1 1/4" BARB, ELBOW, 90 DEGREE, M100125BRB90	1
2	GA2000113	FLANGE CLAMP, AND GASKET, 1", SERIES 100, HYPRO	2
3	GA5077811	HOSE BARB, STRAIGHT, 1 FLANGE X 1 HOSE, BANJO	1
4	GA5077823	TEE, 1 FLANGE X 1 FLANGE X 1 FLANGE, BANJO, M100TEE	1
GA4954155 GOLDACRES		ASSEMBLY DRAWING ONLY. FLUSH AND REFILL OPTION 70011 G4 S2 MY24	REV 00

Super Mix Agitator Assembly

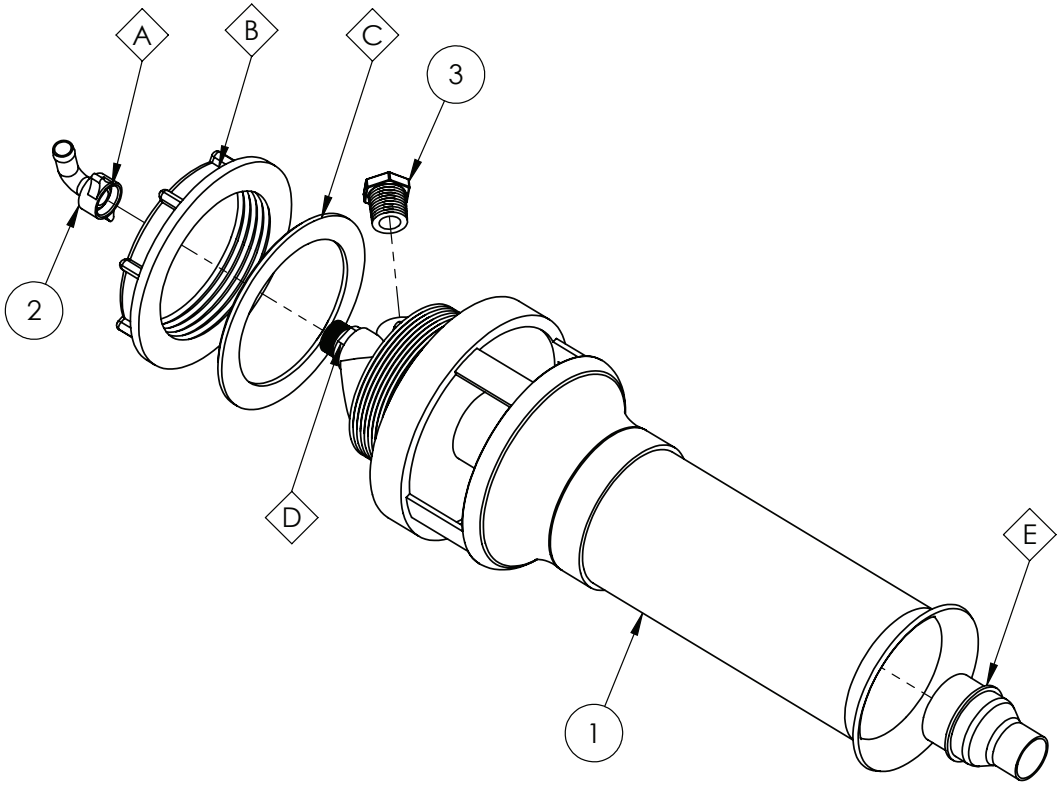

OPTIONAL PARTS			
ITEM	PART NUMBER	DESCRIPTION	QTY
A	GA5075653	SEAL, RUBBER, 11.8 ID X 18 OD X 2, 006100	1
B	GA2000298	FLY NUT, SUPERMIX AGITATOR, ARAG, 502053.040	1
C	GA5024555	SEAL, SUPERMIX AGITATOR 502053.050	1
D	GA5077038	AGITATOR, SUPER MIX, 3mm JET, ARAG, 502054	1
E	GA2000295	NOZZLE, REDUCER, LOW PRESSURE, SUPERMIX AGITATOR, ARAG, 502053.110	1

IF DESCRIPTION PREFIX IS ASSEMBLY DRAWING ONLY OR PRODUCTION DRAWING ONLY THE ITEM IS NOT FOR SALE			
ITEM	PART NUMBER	DESCRIPTION	QTY
1	GA5077038	AGITATOR MIXER BODY WITH NUT AND RUBBER SEAL	1
2	GA5075657	HOSE BARB, ELBOW, 90 DEGREE, 13mm HOSE, INCLUDING 1/2 FLY NUT AND SEAL, BRASS, ARAG	1
3	GA5077943	PLUG, 1/2 MALE THREAD, BANJO	1
GA4908705 GOLDACRES		SUPER MIX AGITATOR ASSEMBLY, NO BYPASS FITTING.	REV 01

Tank Overflow Assembly, 3”

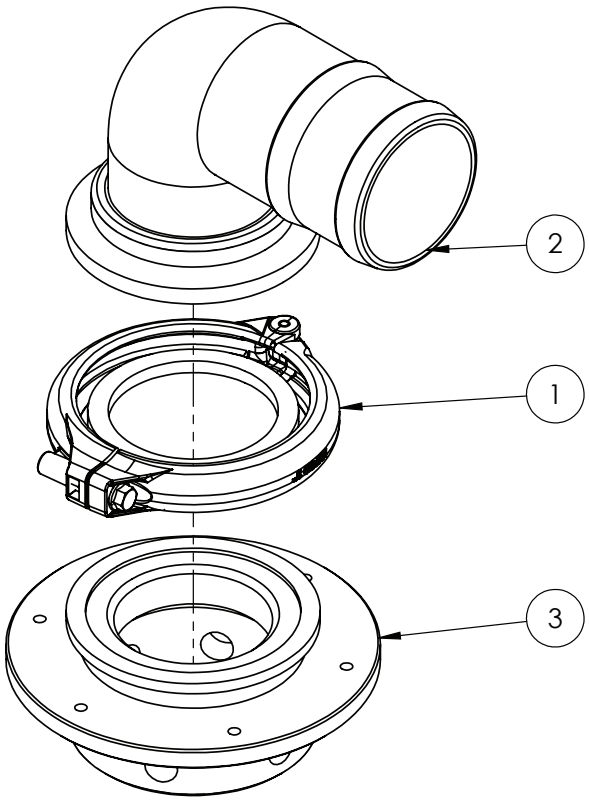

IF DESCRIPTION PREFIX IS ASSEMBLY DRAWING ONLY OR PRODUCTION DRAWING ONLY THE ITEM IS NOT FOR SALE			
ITEM	PART NUMBER	DESCRIPTION	QTY
1	GA2000116	FLANGE CLAMP, AND GASKET, 3", SERIES 300, HYPRO	1
2	GA5077875	HOSE BARB, ELBOW, 90 DEGREE, 3 FLANGE X 3 HOSE, BANJO, M300BRB90	1
3	GA4550590	TANK TOP INLET FITTING, 3" BANJO FLANGE AND 3" NPT FEMALE THREAD	1
GA4907845 GOLDACRES		TANK, OVERFLOW, ASSEMBLY, 3"	REV 01

Tank Rinse Nozzle Assembly, Elbow

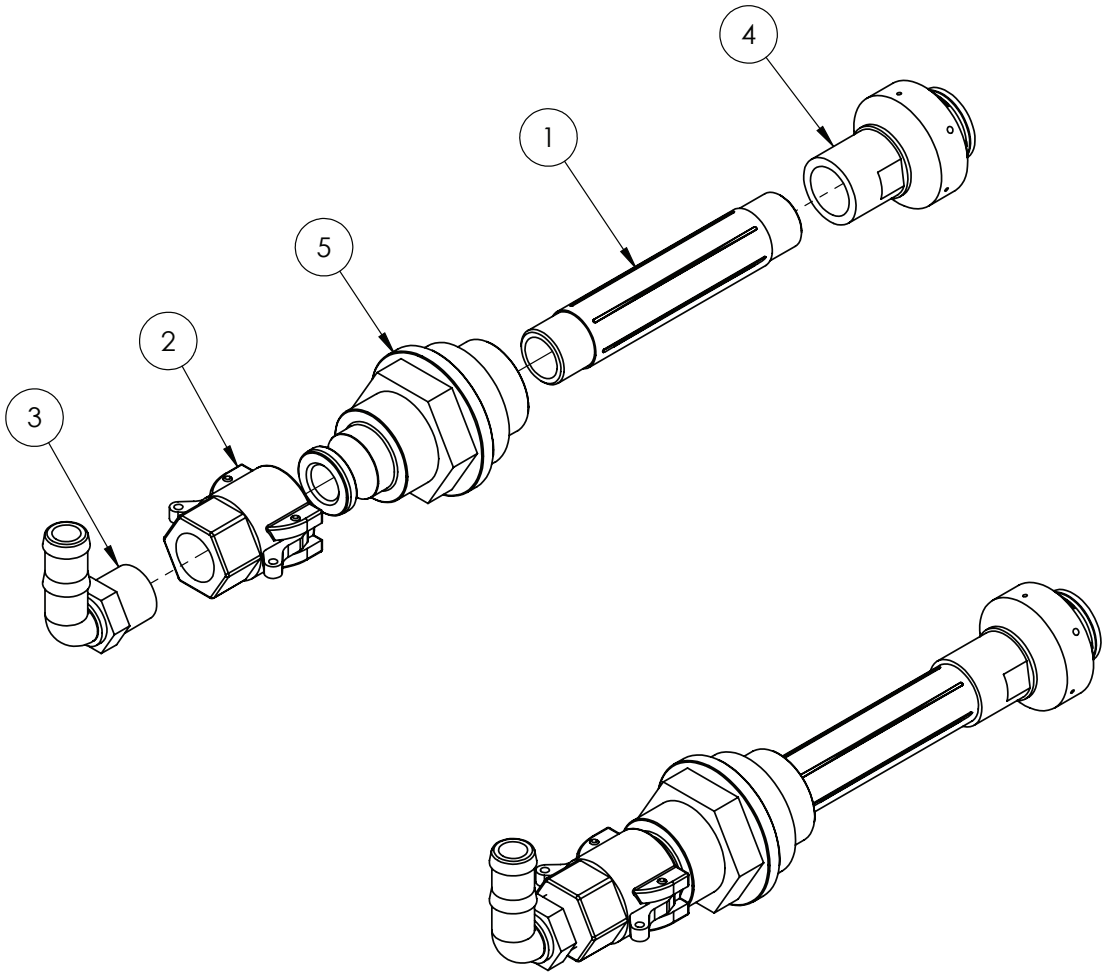

IF DESCRIPTION PREFIX IS ASSEMBLY DRAWING ONLY OR PRODUCTION DRAWING ONLY THE ITEM IS NOT FOR SALE			
ITEM	PART NUMBER	DESCRIPTION	QTY
1	GA5077912	3/4" X 6" POLY NIPPLE	1
2	GA5077132	CAM LEVER, 3/4 FEMALE COUPLING X 3/4 FEMALE THREAD, BANJO	1
3	GA5077717	HOSE BARB, ELBOW, 90 DEGREE, 3/4" MALE THREAD X 3/4" HOSE	1
4	GA5077336	NOZZLE, TANK RINSING, 3/4 BSPT FEMALE INLET, TEEJET	1
5	GA4572015	TANK RINSE ADAPTOR WITH CAM LOCK	1
GA4901285-1 GOLDACRES		TANK, FLUSHING NOZZLE (ELBOW) CAM ADAPTOR	REV 01

Tank Rinse Nozzle Assembly, Tee

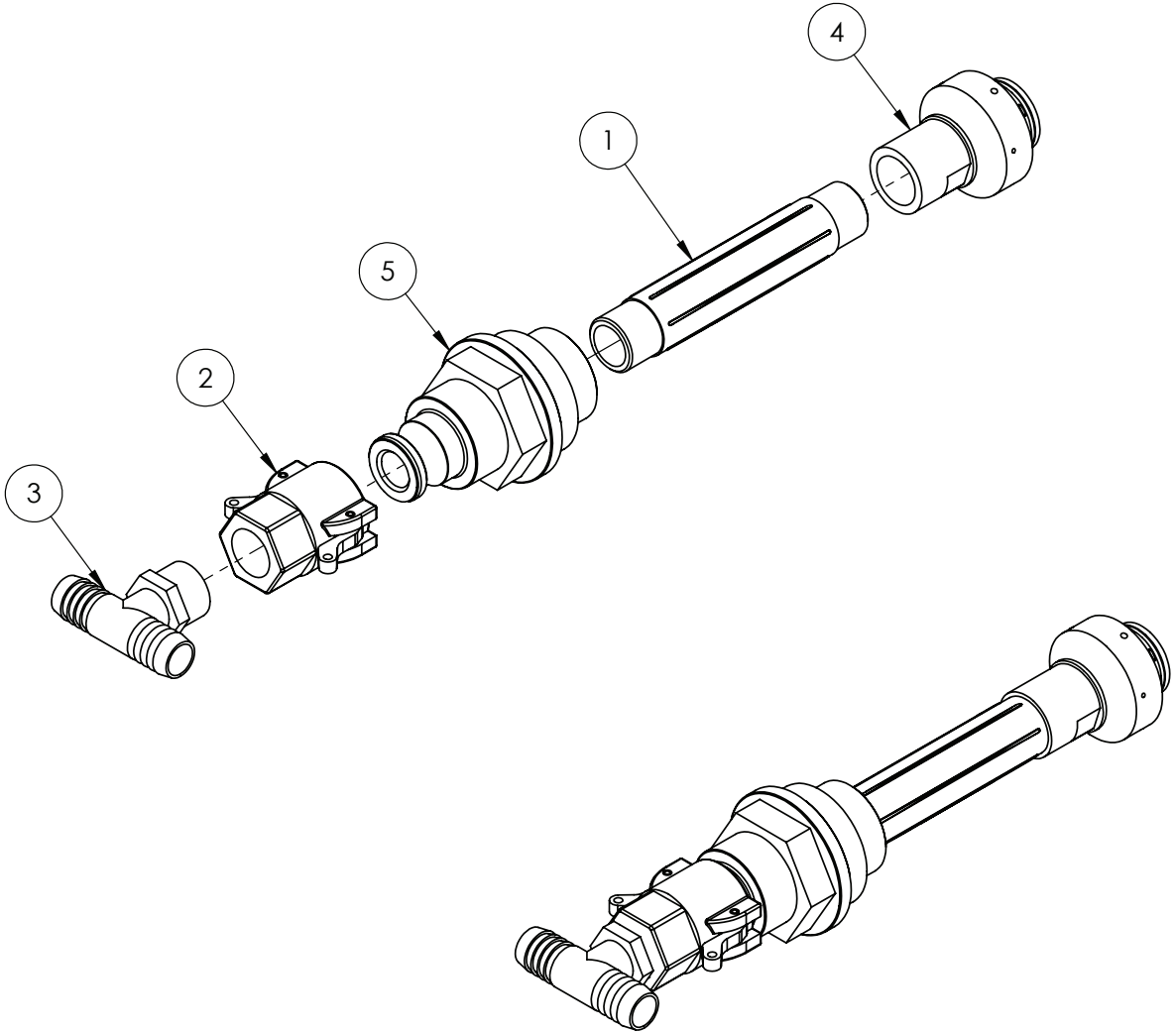

IF DESCRIPTION PREFIX IS ASSEMBLY DRAWING ONLY OR PRODUCTION DRAWING ONLY THE ITEM IS NOT FOR SALE			
ITEM	PART NUMBER	DESCRIPTION	QTY
1	GA5077912	3/4" X 6" POLY NIPPLE	1
2	GA5077132	CAM LEVER, 3/4 FEMALE COUPLING X 3/4 FEMALE THREAD, BANJO	1
3	GA3500431	HOSE BARB, TEE, 3/4" HOSE BARB X 3/4" HOSE BARB X 3/4" MALE THREAD	1
4	GA5077336	NOZZLE, TANK RINSING, 3/4 BSPT FEMALE INLET, TEEJET	1
5	GA4572015	TANK RINSE ADAPTOR WITH CAM LOCK	1
GA4901285-2 GOLDACRES		TANK, RINSING NOZZLE, ASSEMBLY WITH TEE CAM ADAPTOR	REV 00

Valve, Breather Assembly

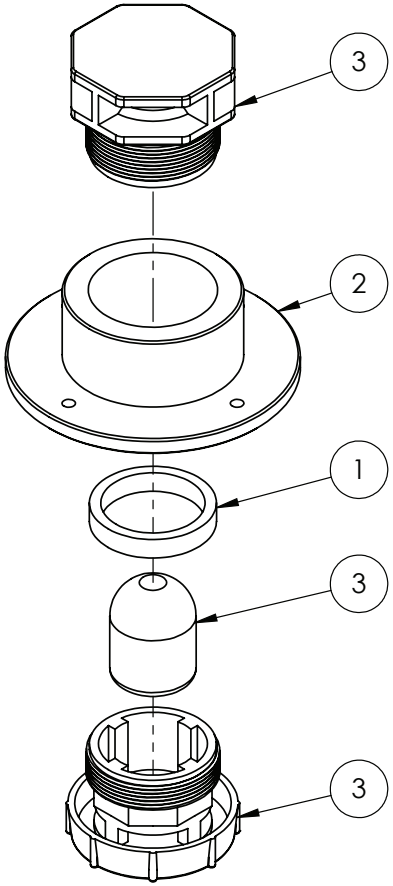

IF DESCRIPTION PREFIX IS ASSEMBLY DRAWING ONLY OR PRODUCTION DRAWING ONLY THE ITEM IS NOT FOR SALE			
ITEM	PART NUMBER	DESCRIPTION	QTY
1	GA4551975	SPACER, 56mm OD, 5mm WALL, 10mm UNIBOARD POLY	1
2	GA4583370	THREADED TANK FLANGE 2"	1
3	GA5077046	VALVE, BREATHER, SINGLE FLOATING BALL, 504210	1
GA4902820 GOLDACRES		VALVE, BREATHER, ASSEMBLY	REV 00

NOTE:
REFER PLUMBING SCHEMATIC FOR HOSE NUMBER DESCRIPTIONS
GA7500073 - PLUMBING SCHEMATIC, 400LMIN MULTISTAGE CENTRIFUGAL PUMP
GA7500074 - PLUMBING SCHEMATIC, 260LMIN DIAPHRAGM PUMP

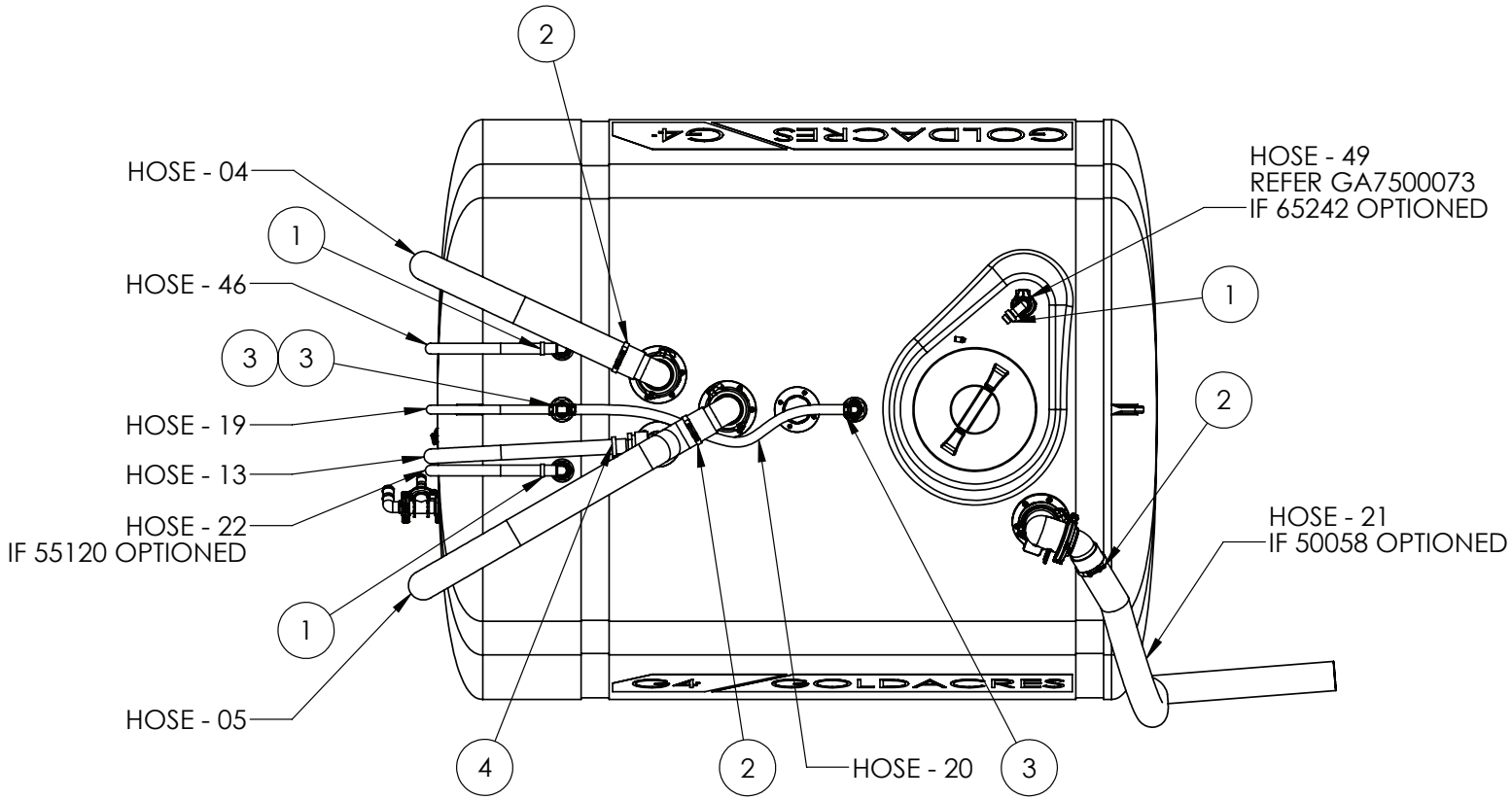

IF DESCRIPTION PREFIX IS ASSEMBLY DRAWING ONLY OR PRODUCTION DRAWING ONLY THE ITEM IS NOT FOR SALE			
ITEM	PART NUMBER	DESCRIPTION	QTY
1	GA5001681	HOSE CLAMP, 1" SS (20-32/12W)	3
2	GA5010195	HOSE CLAMP, 3", T BOLT, 3.25" TO 3.56", LIGHT DUTY, DONALDSON	3
3	GA5000999	HOSE CLAMP, 3/4" SS (16-27/12W)	3
4	GA5002873	HOSE CLAMP, 1 1/2" SS (32-50/12W)	1
GA6101710 GOLDACRES		TANK ASSEMBLY, CONFIG, 4000L, G4 S2, MY24	REV 02

Main Tank, Straps & Chassis Mount

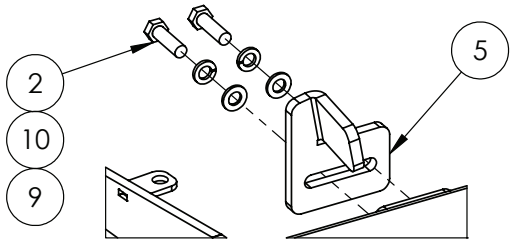

DETAIL A

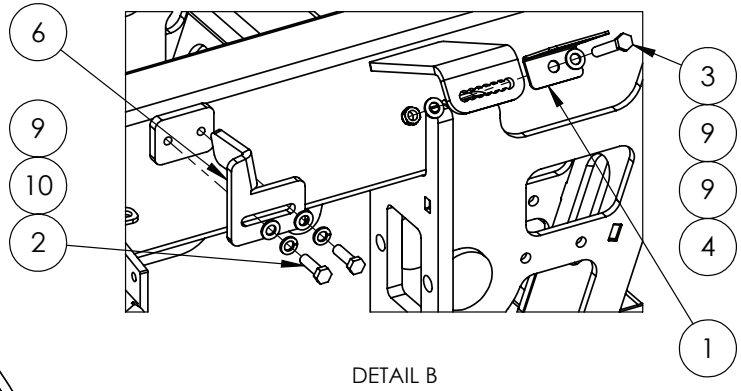

DETAIL B

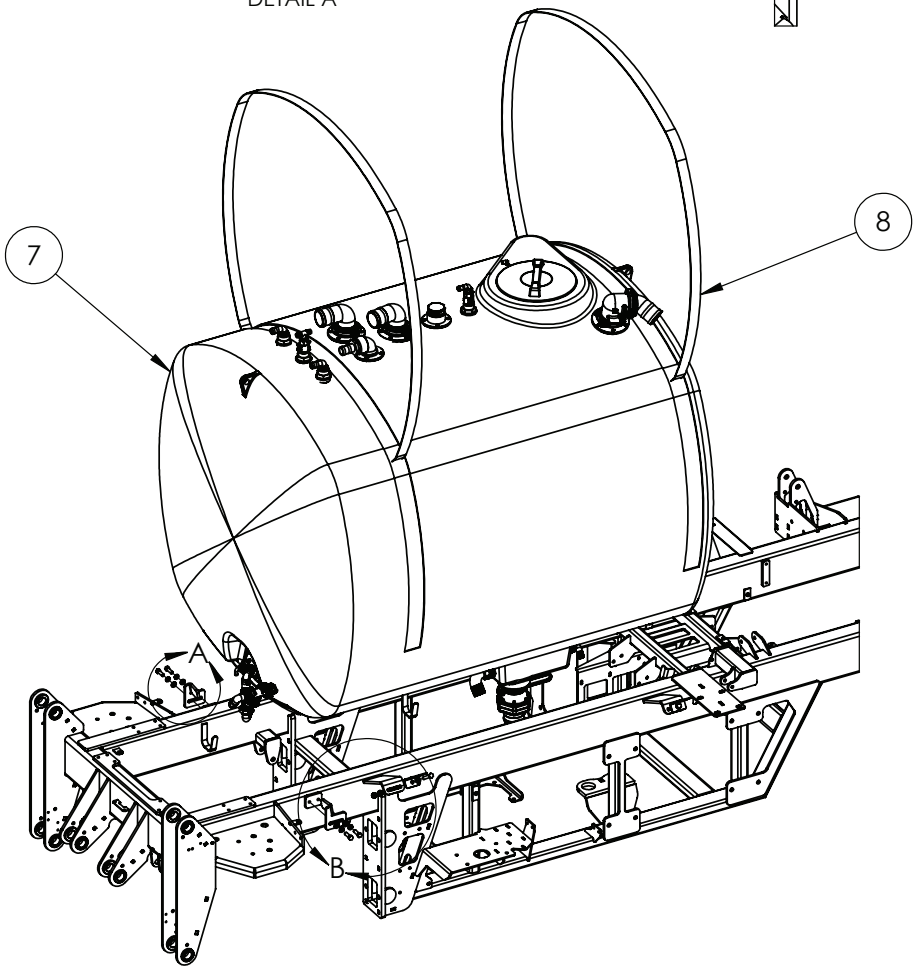

IF DESCRIPTION PREFIX IS ASSEMBLY DRAWING ONLY OR PRODUCTION DRAWING ONLY THE ITEM IS NOT FOR SALE			
ITEM	PART NUMBER	DESCRIPTION	QTY
1	F70127A	50mm TANK STRAP BRACKET	4
2	GA5051725	BOLT M12 X 1.5P X 40 GR8.8 ZP	4
3	GA5000351	BOLT M12 X 75 GR8.8 ZP	4
4	GA5012461	NUT M12 NYLOC ZP	4
5	GA4524870	PLATE, TANK STOP 3000L LH GX	1
6	GA4524875	PLATE, TANK STOP 3000L RH GX	1
7	GA6101710	TANK ASSEMBLY, CONFIG, 4000L, G4 S2, MY24	1
8	GA5003859 G4	TANK STRAP G4 MAIN TANK	2
9	GA5000577	WASHER 12mm FLAT SS HD	12
10	GA5000575	WASHER 12mm SPRING SS	4
GA7800212 GOLDACRES		ASSEMBLY DRAWING ONLY, MAIN TANK, CHASSIS MOUNT, G4 S2, MY24	REV 00

Rinse Tank Assembly

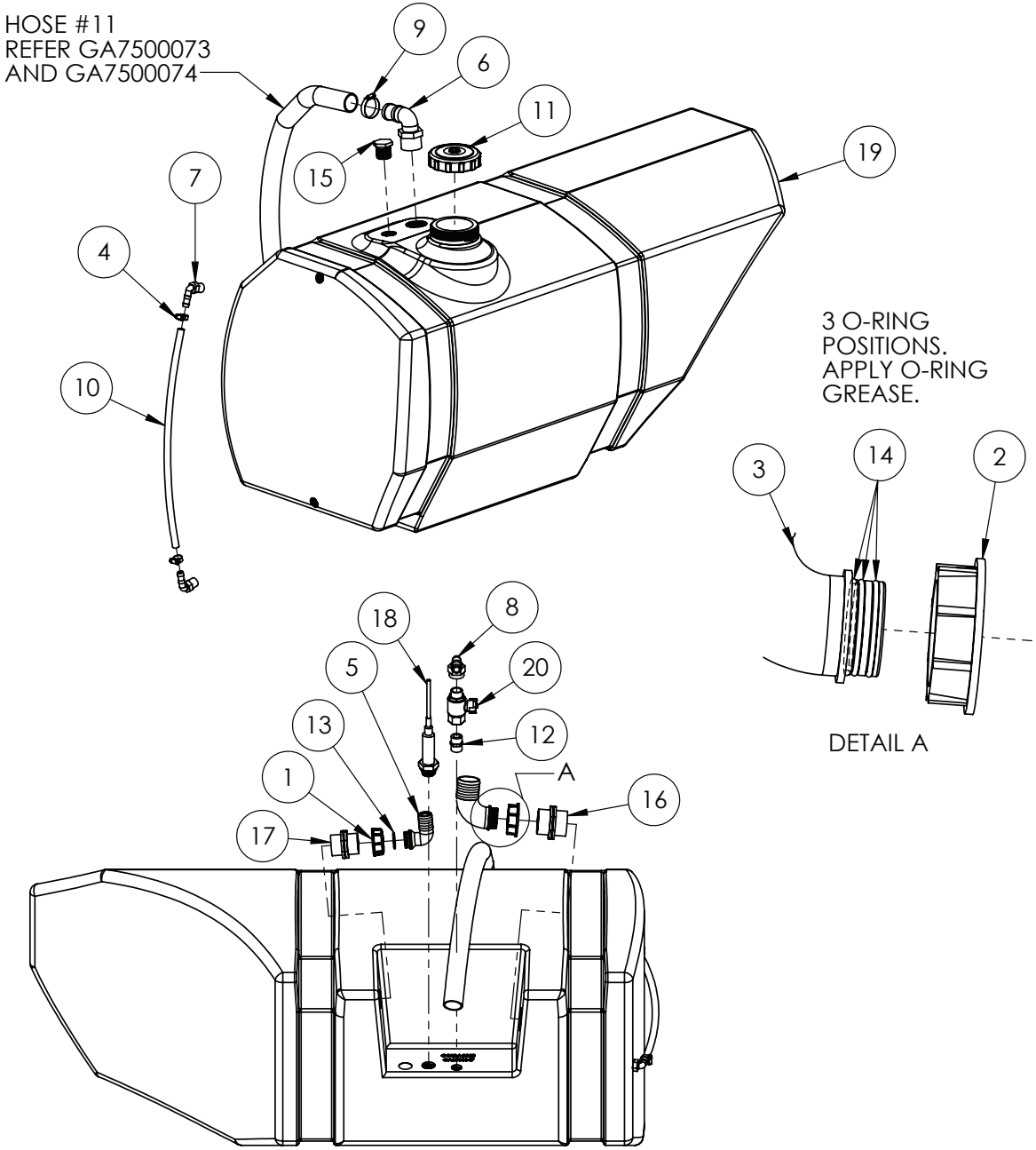

IF DESCRIPTION PREFIX IS ASSEMBLY DRAWING ONLY OR PRODUCTION DRAWING ONLY THE ITEM IS NOT FOR SALE			
ITEM	PART NUMBER	DESCRIPTION	QTY
1	GA5076604	FLY NUT, 1 1/2", ARAG, 2002060	1
2	GA5076605	FLY NUT, 2", ARAG, 2002070	1
3	GA5076262	HOSE BARB, ELBOW, 90 DEGREE, 2" FLY NUT END X 52 mm HOSE, ARAG	1
4	GA5000469	HOSE CLAMP, 1/2" SS 12-20/9W3	2
5	GA5076259	HOSE BARB, ELBOW, 90 DEGREE, 1 1/2 FLY NUT END X 32 mm HOSE, ARAG	1
6	GA5077736	HOSE BARB, ELBOW, 90 DEGREE, 1 1/2" MALE THREAD X 1 1/2" HOSE, BANJO	1
7	GA5077708	HOSE BARB, ELBOW, 90 DEGREE, 1/2 MALE THREAD X 1/2 HOSE, BANJO, HB050-90	2
8	GA5077746	HOSE BARB, ELBOW, 90 DEGREE, 3/4 FEMALE THREAD X 3/4 HOSE, BANJO, HBF075-90	1
9	GA5002873	HOSE CLAMP, 1 1/2" SS (32-50/12W)	1
10	GA2000209	HOSE, CLEAR, 12mm, SIGHT TUBE, HOS12SIGHT	1
11	GA5076885	LID, DIAMETER 113, WITH BREATHER	1
12	GA5077913	NIPPLE, 3/4 MALE X 3/4 MALE, SHORT, BANJO	1
13	GA5077679	O RING, 30 X 3 mm, G10061	1
14	GA5076097	O RING, 42.52 X 2.62, 110193	3
15	GA5077945	PLUG, 1 MALE THREAD, BANJO	1
16	GA5078410	PLUMBING FITTING, NIPPLE, 2", ARAG, 2502070	1
17	GA5078409	PLUMBING FITTING, NIPPLE, 1 1/2", ARAG, 2502060	1
18	GA3000317	PRESSURE SENSOR, 0 - 0.4 BAR, GTS GAUGES	1
19	GA8500047	TANK, RINSE, G4, MY24	1
20	GA5018315	VALVE, BALL, 20mm, 3/4" MALE, FEMALE, BLACK BUTTERFLY HANDLE, BRASS	1
GA4952565 GOLDACRES		TANK ASSEMBLY, RINSE TANK, G4 S2, MY24	REV 00

Tank, Hand Wash, 70L

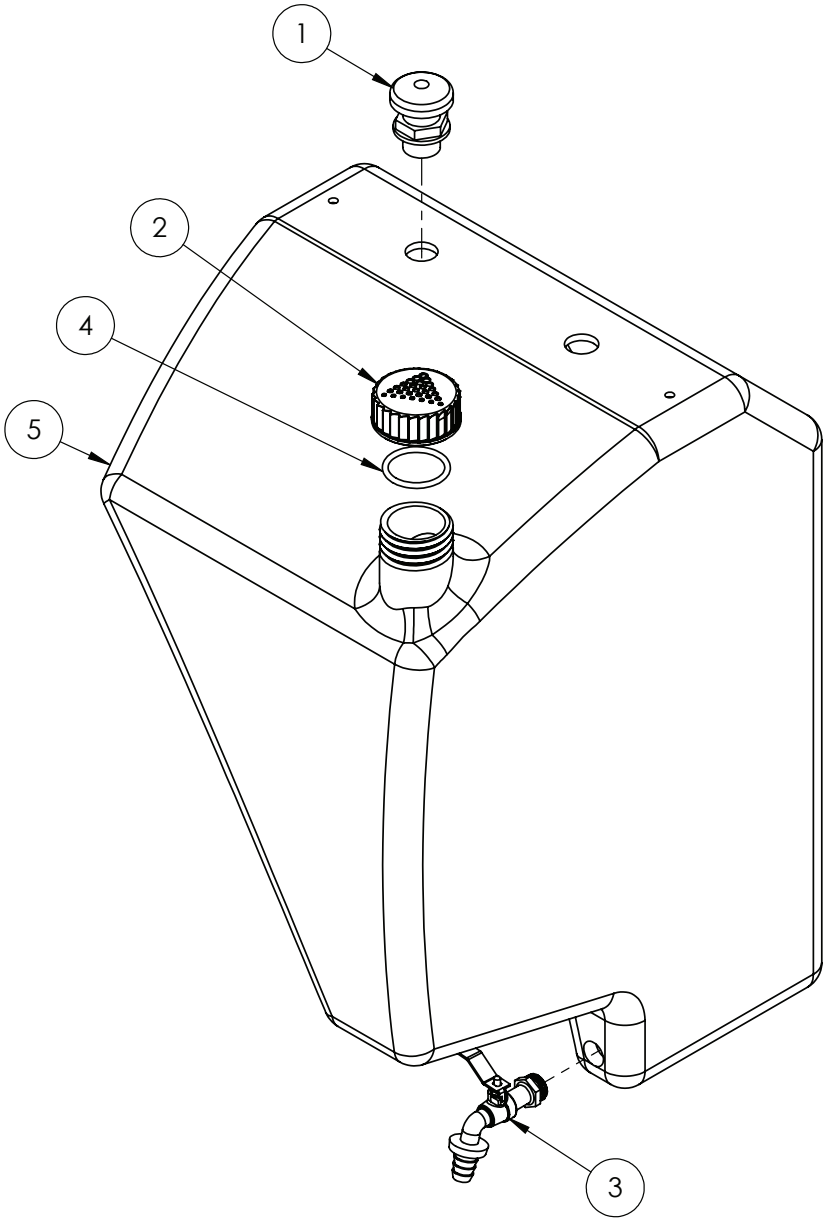

IF DESCRIPTION PREFIX IS ASSEMBLY DRAWING ONLY OR PRODUCTION DRAWING ONLY THE ITEM IS NOT FOR SALE			
ITEM	PART NUMBER	DESCRIPTION	QTY
1	GA5077045	BREATHER VALVE, LABYRINTH TYPE, 1" MALE THREAD, ARAG	1
2	GA5075400	CAP, TANK, PLASTIC, LID, M65.5X8 THREAD, GOLDACRES LOGO	1
3	GA5070735	HAND WASH BOTTLE TAP	1
4	GA5009187	O RING, 60 OD, 50 ID X 5mm, SUITS EXACTA TANK CAP	1
5	GA8500017	TANK, 70L, HAND WASH, BLACK, G3V G4V	1
GA4913370 GOLDACRES		TANK ASSEMBLY, HAND WASH 70L, G4	REV 01

06 - Side Modules & Controls

LH Pod Build Options

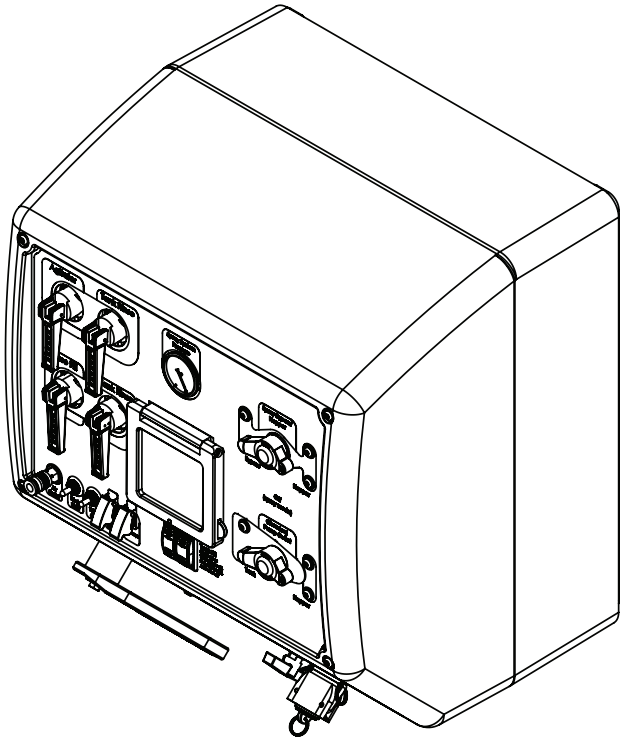

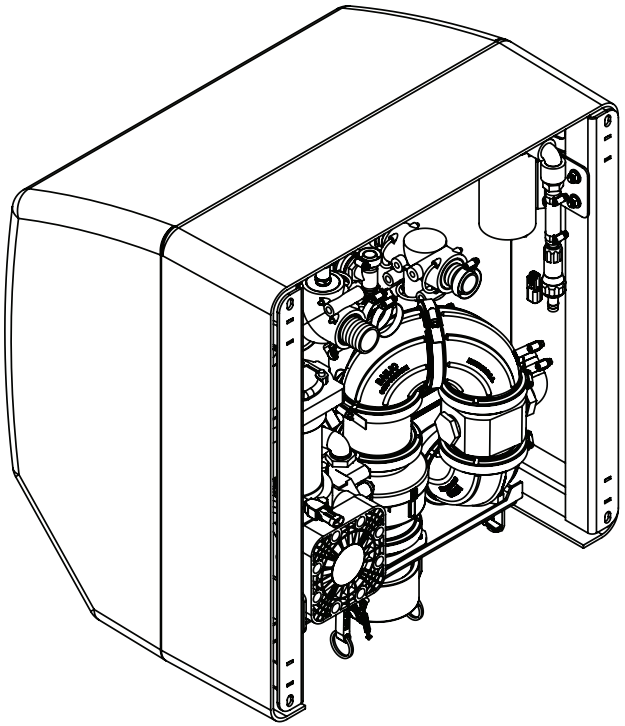

BUILD OPTIONS:
10061 - 3TS RAPID FIRE AND RAPID FLOW 250mm SPACING (STAGGERED)
10067 - 3TS RAPID FIRE WITH RAPID FLOW 250mm SPACING (STAGGERED) WITH TRIJETS ON TIER 1
10069 - 3TS RAPID FIRE WITH RAPID FLOW 250mm SPACING (STAGGERED) WITH TRIJETS ON TIERS 1 & 2
10073 - 3TS PRO (MUST SELECT RCM IF NOT STANDARD)
10073 - HAWKEYE 2ND GENERATION PWM SYSTEM - 250MM SPACING
10074 - HAWKEYE 2ND GENERATION PWM SYSTEM - 500MM SPACING
50020 - MICROMATIC RINSE SOCKET AND MICROMATIC COUPLER
50055 - 3" FILL PUMP
55120 - CHEMICAL TRANSFER PUMP

GA6101660 GOLDACRES	PLUMBING POD ASSEMBLY, CONFIGURABLE, G4 S2, MY24	REV 01

LH Pod, Chassis Mounting

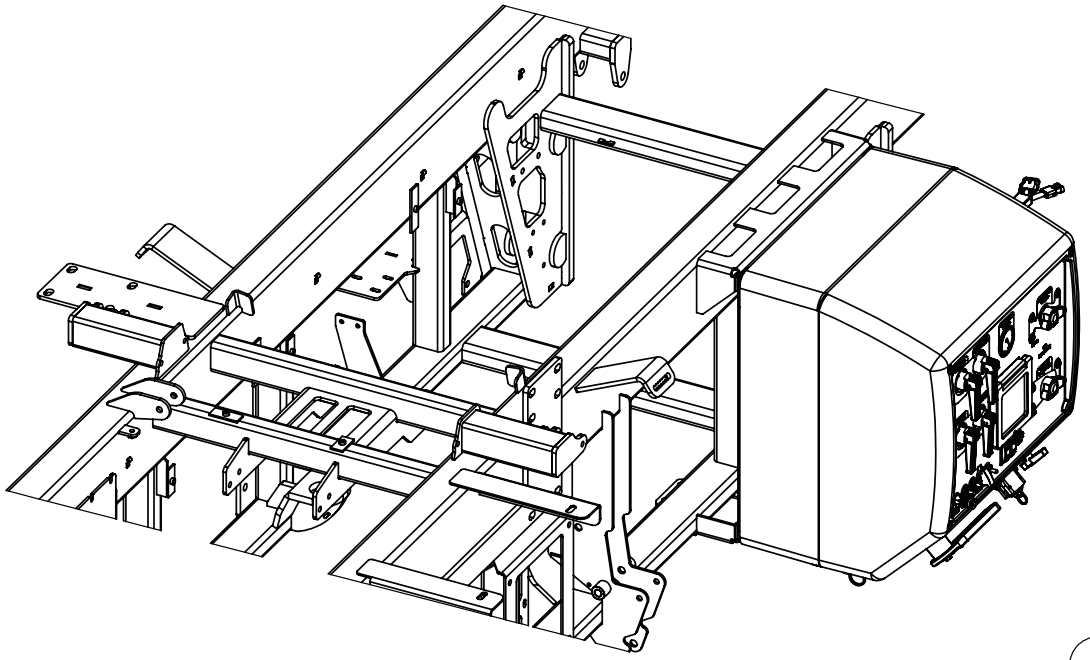

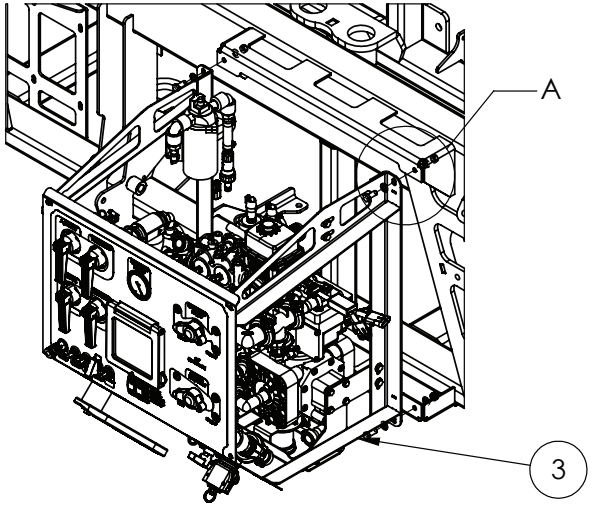

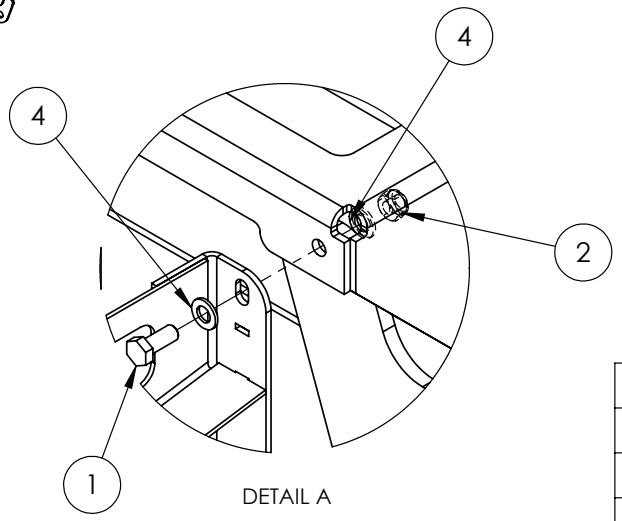

IF DESCRIPTION PREFIX IS ASSEMBLY DRAWING ONLY OR PRODUCTION DRAWING ONLY THE ITEM IS NOT FOR SALE			
ITEM	PART NUMBER	DESCRIPTION	QTY
1	GA5006161	BOLT M10 X 25 GR8.8 ZP	4
2	GA5000141	NUT M10 NYLOC ZP	4
3	GA6101660	PLUMBING POD ASSEMBLY, CONFIGURABLE, G4 S2, MY24	1
4	GA5000117	WASHER 10mm FLAT SS HD	8
GA7800206 GOLDACRES		ASSEMBLY DRAWING ONLY, PLUMBING POD, CHASSIS MOUNT, G4 S2, MY24	REV 00

LH Pod, Display Screen & Controls

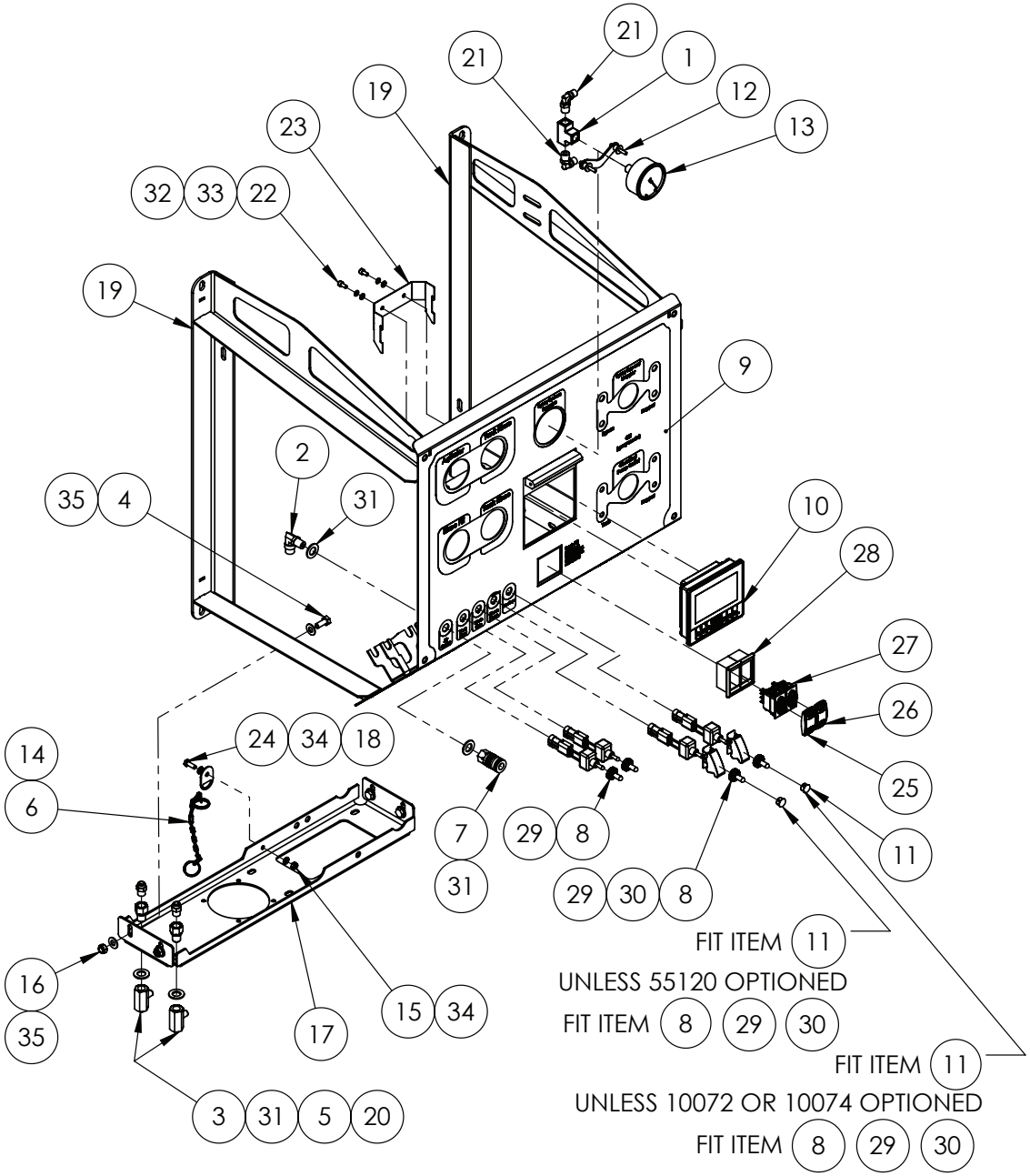

IF DESCRIPTION PREFIX IS ASSEMBLY DRAWING ONLY OR PRODUCTION DRAWING ONLY THE ITEM IS NOT FOR SALE			
ITEM	PART NUMBER	DESCRIPTION	QTY
1	GA5048300	1/4 FEMALE BRASS TEE	1
2	GA5078518	AIR FITTING, ELBOW, SWIVEL, 3/8" TUBE, 1/4" NPT MALE, PUSH IN, BRASS, ALKON - AQ69-DOTS-6X4	1
3	GA5018321	BALL VALVE, 1/4" FEMALE, BLACK LEVER HANDLE, CHROMED	2
4	GA5004085	BOLT M8 X 20 GR8.8 ZP	4
5	GA5024510	BRASS ADAPTOR, 1/4" BSPP MALE TO 1/4" NPT FEMALE	2
6	GA5001491	Chain 2 x 20 mm SS 316, 146102, Cut 150mm	0.15
7	GA5076620	COUPLING, AIR, 1/4" BSPP FEMALE X FEMALE, BRASS, 200	1
8	GA5012175	COVER, TOGGLE SWITCH, WATERPROOF, NARVA	4
9	GA8701844	DECAL, PLUMBING POD, G4 S2	1
10	GA3000619	DISPLAY SCREEN, 4.3", NON TOUCH, IFM CR1140	1
11	GA5048780	DOME PLUG 12mm	2
12	GA5075455	GAUGE RETAINER, MOUNTING BRACKET, 63mm GAUGE, HYDAC	1
13	GA3500693	GAUGE, 63mm, 1/4" BSP REAR PORT, SMALL, 160 PSI 10 BAR HYDAC	1
14	GA5002077	KEY RING, 25mm, SS	2
15	GA5048115	NUT M6 NYLOC ZP	1
16	GA5004917	NUT M8 NYLOC ZP	4
17	GA4415710	PLATE, BRACKET, PLUMBING POD FILL POINT MOUNT, G4 S2, MY24	1
18	GA4414275	PLATE, SIDE POD, CHAIN ATTACHMENT POINT, PRAIRIE SPECIAL, S2, MY23	1
19	GA4604530	PLUMBING POD FRAME, G4 S2, MY24	1
20	GA5045140	PNEUMATIC FITTING, NIPPLE, PUSH IN 6mm X 1/4" BSPT, BRASS	2
21	GA5016233	PNEUMATIC FITTING, ELBOW, 90 DEGREE, 1/4 BSP MALE X 6mm PUSH IN TYPE, METAL	2
22	GA5069975	SHCS M5 X 10 SS A2-70	2
23	GA3000931	SCREEN BRACKET, SUIT CR1140 DISPLAY	1
24	GA5011395	SET SCREW M6 X 16 SS A2-70	1
25	GA3000888	SWITCH ACTUATOR, FILL PUMP / FILL MAIN TANK, LASER ETCHED, G4 MY24	1
26	GA3000889	SWITCH ACTUATOR, PUMP, PRODUCT AND RINSE, LASER ETCHED, G4 MY24	1
27	GA3000364	SWITCH BODY, MOM/OFF/MOM, 2P2T, BLUE LED, NO ACTUATOR, CARLING	2
28	GA5006397	SWITCH HOUSING END	2
29	GA5060064	SWITCH, FILL PUMP, PRE ASSEMBLED LOOM WITH CONNECTOR	4
30	GA5016753	TOGGLE SWITCH COVER - NARVA	2
31	GA5017655	WASHER 1/2 FLAT SS	4
32	GA5003983	WASHER 5mm FLAT SS	2
33	GA5003629	WASHER 5mm SPRING SS	2
34	GA5004437	WASHER 6mm FLAT SS	2
35	GA5003643	WASHER 8mm FLAT SS HD	8
GA6101660-01 GOLDACRES		PLUMBING POD ASSEMBLY, G4 S2, MY24	REV 01

LH Pod, 3” Manual Fill Manifold Assembly, (No Fill Pump or Micromatic)

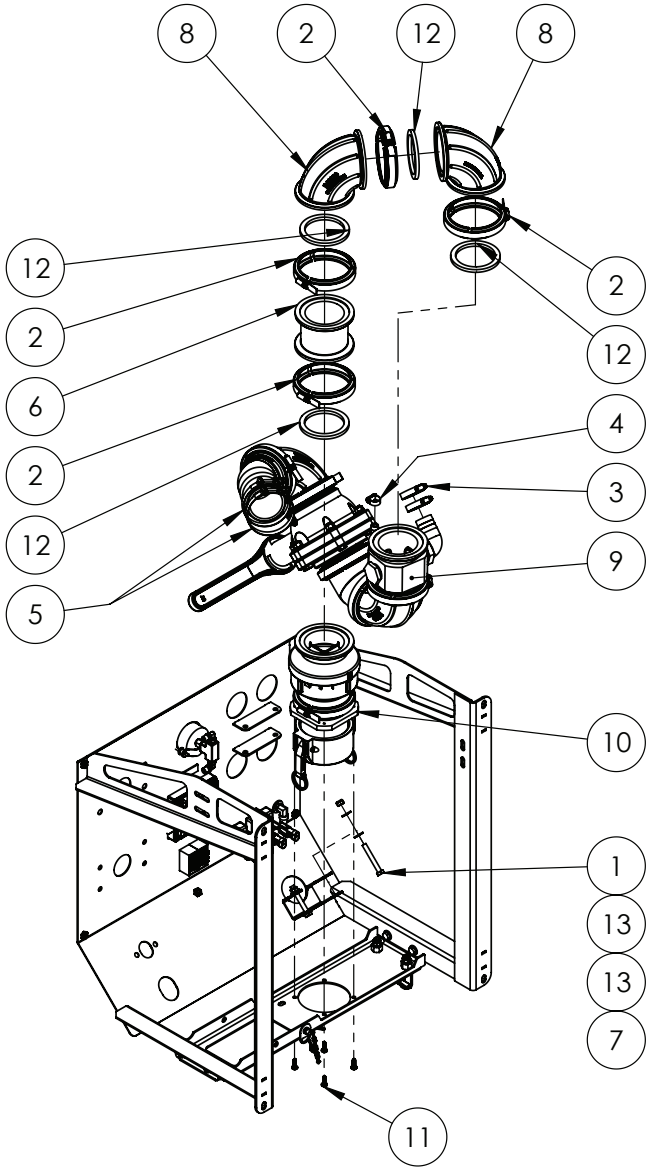

IF DESCRIPTION PREFIX IS ASSEMBLY DRAWING ONLY OR PRODUCTION DRAWING ONLY THE ITEM IS NOT FOR SALE			
ITEM	PART NUMBER	DESCRIPTION	QTY
1	GA5011489	BOLT M8 X 60 GR8.8 ZP	2
2	FC300	CLAMP, 3" FLANGE MANIFOLD, BANJO	4
3	GA5002783	HOSE CLAMP, 1 1/4, SS (30-45/13W)	2
4	GA5000469	HOSE CLAMP, 1/2" SS 12-20/9W3	1
5	GA5010195	HOSE CLAMP, 3", T BOLT, 3.25" TO 3.56", LIGHT DUTY, DONALDSON	2
6	GA4550412	MANIFOLD EXTENSION, 80mm, 3" FULL PORT	1
7	GA5052590	NUT M8 NYLOC SS	2
8	GA2000345	PLUMBING FITTING, SWEPT ELBOW, 90, 3", M300 FLANGE, M300SWP90, BANJO	2
9	GA4952645	PRODUCTION DRAWING ONLY. FILL MANIFOLD VALVE ASSEMBLY, G4 S2, MY24	1
10	GA4952650	PRODUCTION DRAWING ONLY. FILL MANIFOLD INLET ASSEMBLY, G4 S2, MY24	1
11	GA5050060	SCREW PAN HEAD 12G X 3/4 SELF TAPPER SS	4
12	GA5076723	SEAL, EPDM, SUIT 3 FLANGE FITTING, BANJO, 300G	4
13	GA5003643	WASHER 8mm FLAT SS HD	4
GA6101660-02 GOLDACRES		PLUMBING POD ASSEMBLY, G4 S2, MY24	REV 02

BUILD OPTIONS:
BASE SPRAYER
WITHOUT - MICROMATIC RINSE SOCKET AND MICROMATIC COUPLER
WITHOUT - 3" FILL PUMP

LH Pod, 3” Manual Fill Manifold Assembly, (No Fill Pump with Micromatic)

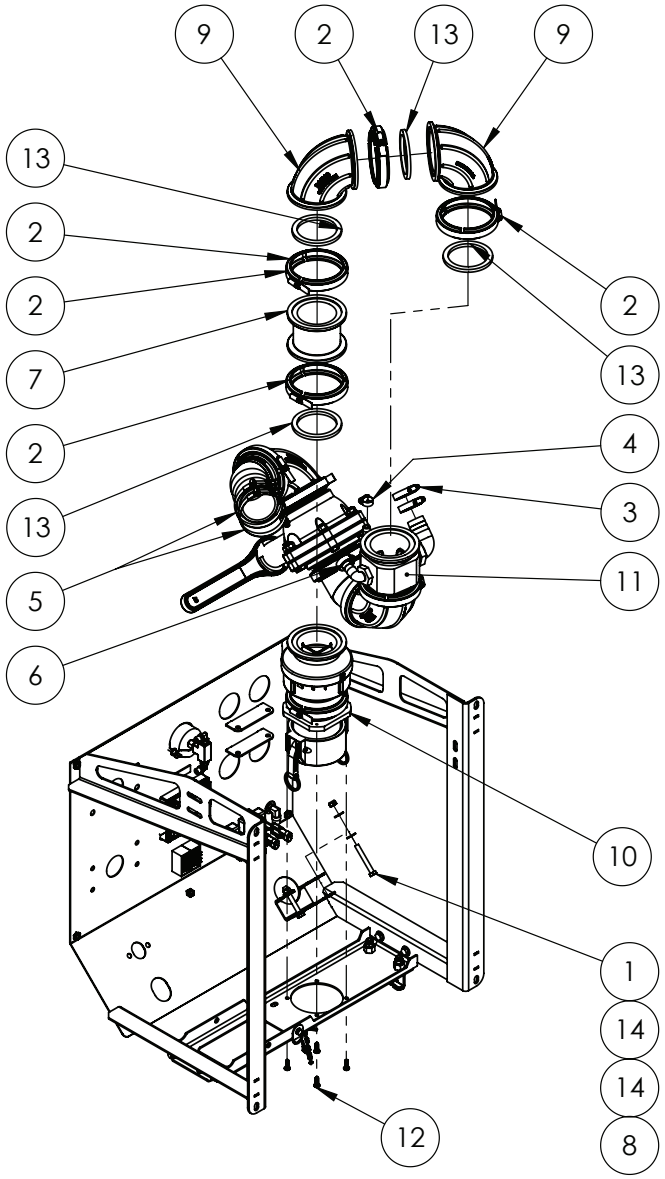

IF DESCRIPTION PREFIX IS ASSEMBLY DRAWING ONLY OR PRODUCTION DRAWING ONLY THE ITEM IS NOT FOR SALE			
ITEM	PART NUMBER	DESCRIPTION	QTY
1	GA5011489	BOLT M8 X 60 GR8.8 ZP	2
2	FC300	CLAMP, 3" FLANGE MANIFOLD, BANJO	4
3	GA5002783	HOSE CLAMP, 1 1/4, SS (30-45/13W)	2
4	GA5000469	HOSE CLAMP, 1/2" SS 12-20/9W3	1
5	GA5010195	HOSE CLAMP, 3", T BOLT, 3.25" TO 3.56", LIGHT DUTY, DONALDSON	2
6	GA5000999	HOSE CLAMP, 3/4" SS (16-27/12W)	1
7	GA4550412	MANIFOLD EXTENSION, 80mm, 3" FULL PORT	1
8	GA5052590	NUT M8 NYLOC SS	2
9	GA2000345	PLUMBING FITTING, SWEPT ELBOW, 90, 3", M300 FLANGE, M300SWP90, BANJO	2
10	GA4952650	PRODUCTION DRAWING ONLY. FILL MANIFOLD INLET ASSEMBLY, G4 S2, MY24	1
11	GA4952660	PRODUCTION DRAWING ONLY. FILL MANIFOLD VALVE ASSEMBLY, WITH RINSE SOCKET, G4 S2, MY24	1
12	GA5050060	SCREW PAN HEAD 12G X 3/4 SELF TAPPER SS	4
13	GA5076723	SEAL, EPDM, SUIT 3 FLANGE FITTING, BANJO, 300G	4
14	GA5003643	WASHER 8mm FLAT SS HD	4
GA6101660-02 GOLDACRES		PLUMBING POD ASSEMBLY, G4 S2, MY24	REV 02

BUILD OPTIONS:
50020 - MICROMATIC RINSE SOCKET AND MICROMATIC COUPLER
WITHOUT - 3" FILL PUMP

LH Pod, 3” Fill Manifold Assembly, (With Fill Pump - Without Micromatic)

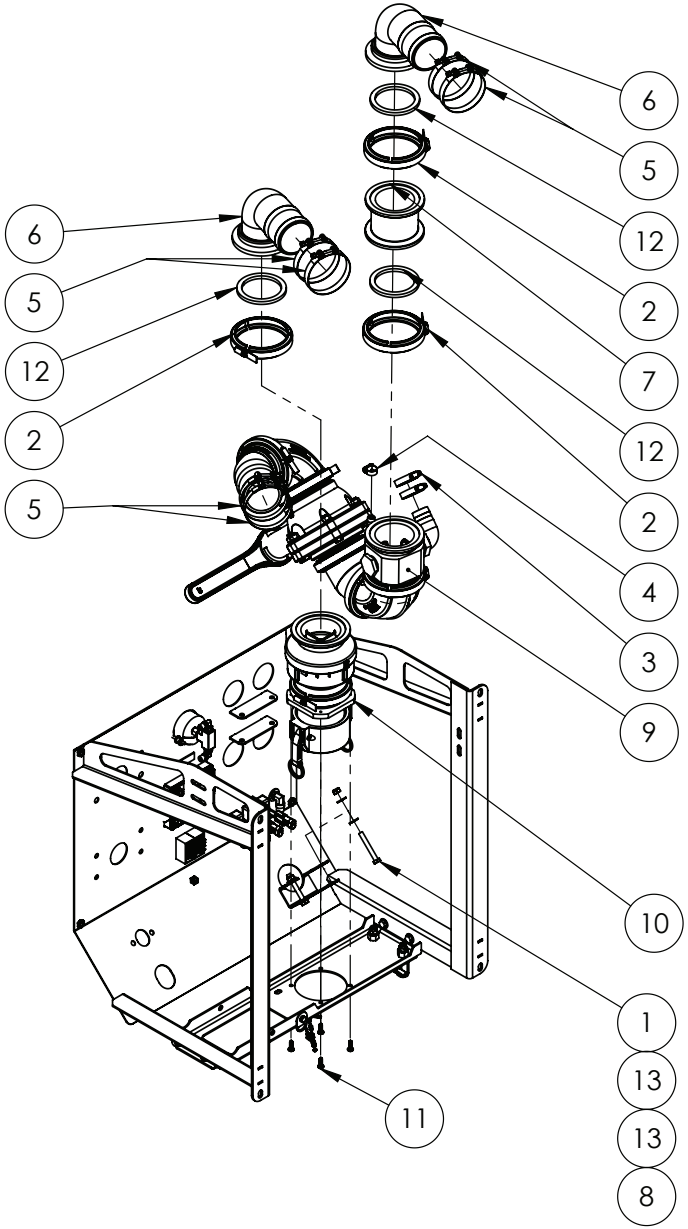

IF DESCRIPTION PREFIX IS ASSEMBLY DRAWING ONLY OR PRODUCTION DRAWING ONLY THE ITEM IS NOT FOR SALE			
ITEM	PART NUMBER	DESCRIPTION	QTY
1	GA5011489	BOLT M8 X 60 GR8.8 ZP	2
2	FC300	CLAMP, 3" FLANGE MANIFOLD, BANJO	3
3	GA5002783	HOSE CLAMP, 1 1/4, SS (30-45/13W)	2
4	GA5000469	HOSE CLAMP, 1/2" SS 12-20/9W3	1
5	GA5010195	HOSE CLAMP, 3", T BOLT, 3.25" TO 3.56", LIGHT DUTY, DONALDSON	6
6	GA5077875	HOSE BARB, ELBOW, 90 DEGREE, 3 FLANGE X 3 HOSE, BANJO, M300BRB90	2
7	GA4550412	MANIFOLD EXTENSION, 80mm, 3" FULL PORT	1
8	GA5004917	NUT M8 NYLOC ZP	2
9	GA4952645	PRODUCTION DRAWING ONLY. FILL MANIFOLD VALVE ASSEMBLY, G4 S2, MY24	1
10	GA4952650	PRODUCTION DRAWING ONLY. FILL MANIFOLD INLET ASSEMBLY, G4 S2, MY24	1
11	GA5050060	SCREW PAN HEAD 12G X 3/4 SELF TAPPER SS	4
12	GA5076723	SEAL, EPDM, SUIT 3 FLANGE FITTING, BANJO, 300G	3
13	GA5003643	WASHER 8mm FLAT SS HD	4
GA6101660-02 GOLDACRES		PLUMBING POD ASSEMBLY, G4 S2, MY24	REV 02

BUILD OPTIONS:
WITHOUT - MICROMATIC RINSE SOCKET AND MICROMATIC COUPLER
50055 - 3" FILL PUMP

LH Pod, 3” Fill Manifold Assembly, (With Fill Pump & Micromatic)

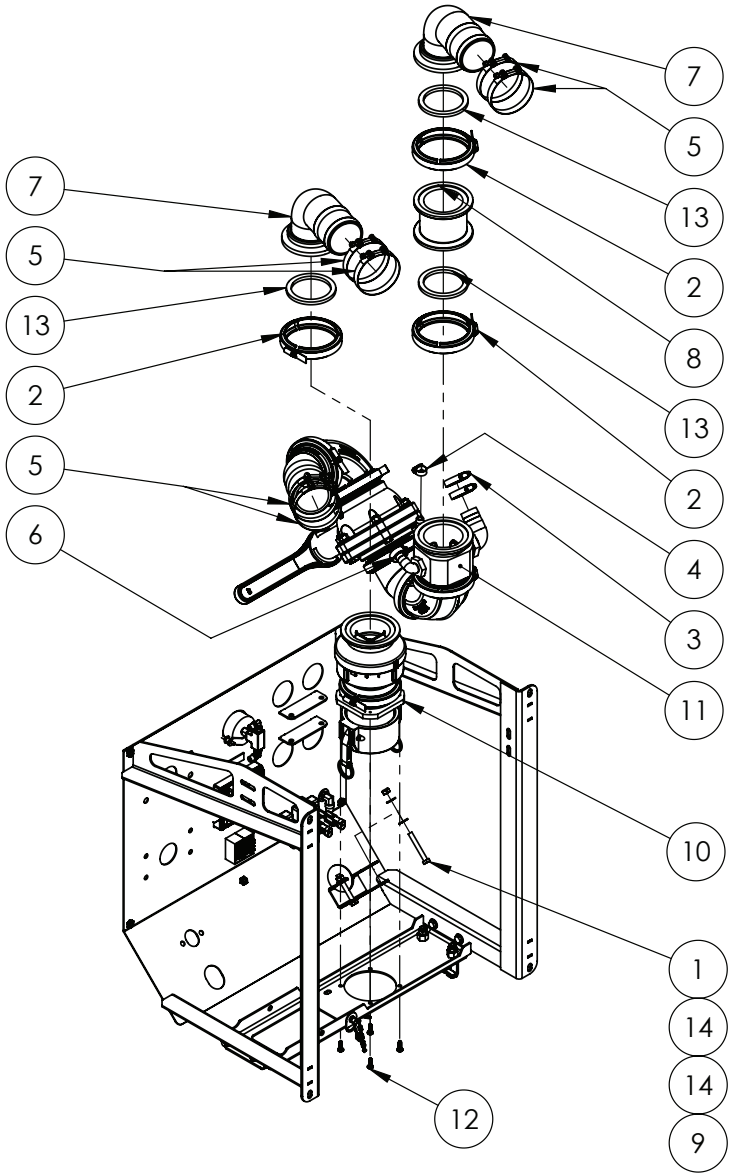

IF DESCRIPTION PREFIX IS ASSEMBLY DRAWING ONLY OR PRODUCTION DRAWING ONLY THE ITEM IS NOT FOR SALE			
ITEM	PART NUMBER	DESCRIPTION	QTY
1	GA5011489	BOLT M8 X 60 GR8.8 ZP	2
2	FC300	CLAMP, 3" FLANGE MANIFOLD, BANJO	3
3	GA5002783	HOSE CLAMP, 1 1/4, SS (30-45/13W)	2
4	GA5000469	HOSE CLAMP, 1/2" SS 12-20/9W3	1
5	GA5010195	HOSE CLAMP, 3", T BOLT, 3.25" TO 3.56", LIGHT DUTY, DONALDSON	6
6	GA5000999	HOSE CLAMP, 3/4" SS (16-27/12W)	1
7	GA5077875	HOSE BARB, ELBOW, 90 DEGREE, 3 FLANGE X 3 HOSE, BANJO, M300BRB90	2
8	GA4550412	MANIFOLD EXTENSION, 80mm, 3" FULL PORT	1
9	GA5004917	NUT M8 NYLOC ZP	2
10	GA4952650	PRODUCTION DRAWING ONLY. FILL MANIFOLD INLET ASSEMBLY, G4 S2, MY24	1
11	GA4952660	PRODUCTION DRAWING ONLY. FILL MANIFOLD VALVE ASSEMBLY, WITH RINSE SOCKET, G4 S2, MY24	1
12	GA5050060	SCREW PAN HEAD 12G X 3/4 SELF TAPPER SS	4
13	GA5076723	SEAL, EPDM, SUIT 3 FLANGE FITTING, BANJO, 300G	3
14	GA5003643	WASHER 8mm FLAT SS HD	4
GA6101660-02 GOLDACRES		PLUMBING POD ASSEMBLY, G4 S2, MY24	REV 02

BUILD OPTIONS:
50020 - MICROMATIC RINSE SOCKET AND MICROMATIC COUPLER
50055 - 3" FILL PUMP

3” Fill Manifold Valve Assembly, without Rinse Socket

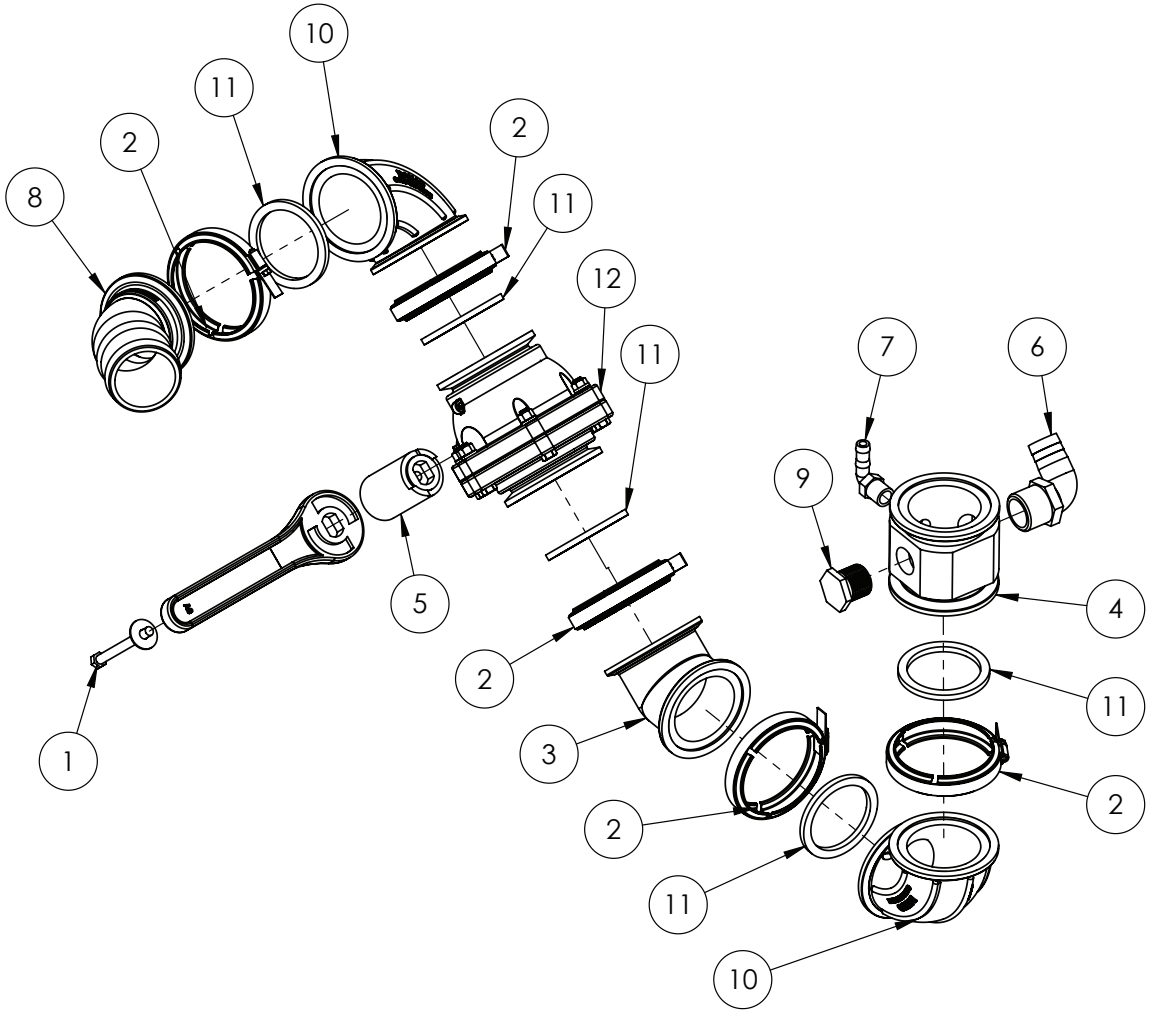

IF DESCRIPTION PREFIX IS ASSEMBLY DRAWING ONLY OR PRODUCTION DRAWING ONLY THE ITEM IS NOT FOR SALE			
ITEM	PART NUMBER	DESCRIPTION	QTY
1	GA0500039	BOLT, 3/8" X 4" UNC ZP, GR8	1
2	FC300	CLAMP, 3" FLANGE MANIFOLD, BANJO	5
3	GA2000070	ELBOW, 45°, 3" FULL PORT FLANGE, BANJO	1
4	GA4550415	FILL MANIFOLD TEE, 3" FILL SYSTEM	1
5	GA4550420	HANDLE EXTENSION, 85mm, 3" FULL PORT BALL VALVE, BANJO	1
6	GA5077730	HOSE BARB, ELBOW, 90 DEGREE, 1 1/4" MALE THREAD X 1 1/4" HOSE, BANJO	1
7	GA5077708	HOSE BARB, ELBOW, 90 DEGREE, 1/2 MALE THREAD X 1/2 HOSE, BANJO, HB050-90	1
8	GA5077874	MANIFOLD HOSE BARB 3", 45 DEGREE, M300BRB45	1
9	GA5077945	PLUG, 1 MALE THREAD, BANJO	1
10	GA2000345	PLUMBING FITTING, SWEPT ELBOW, 90, 3", M300 FLANGE, M300SWP90, BANJO	2
11	GA5076723	SEAL, EPDM, SUIT 3 FLANGE FITTING, BANJO, 300G	5
12	GA2000119	VALVE, BALL, 3" MANIFOLD FLANGE BOTH ENDS, STUBBY, BANJO, MVS300CFFP	1
GA4952645 GOLDACRES		PRODUCTION DRAWING ONLY. FILL MANIFOLD VALVE ASSEMBLY, G4 S2, MY24	REV 00.B

3” Fill Manifold Valve Assembly, with Rinse Socket

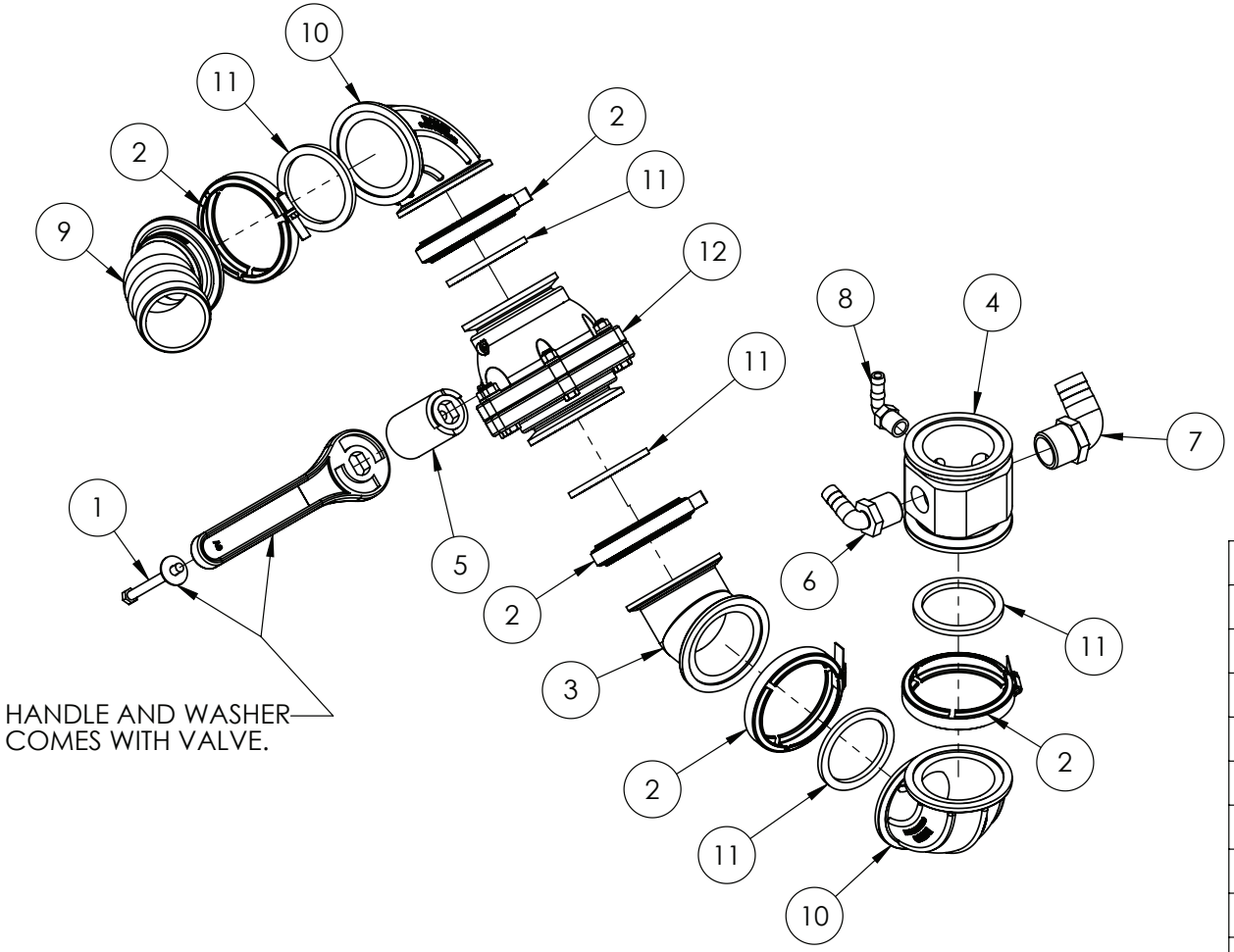

IF DESCRIPTION PREFIX IS ASSEMBLY DRAWING ONLY OR PRODUCTION DRAWING ONLY THE ITEM IS NOT FOR SALE			
ITEM	PART NUMBER	DESCRIPTION	QTY
1	GA0500039	BOLT, 3/8" X 4" UNC ZP, GR8	1
2	FC300	CLAMP, 3" FLANGE MANIFOLD, BANJO	5
3	GA2000070	ELBOW, 45°, 3" FULL PORT FLANGE, BANJO	1
4	GA4550415	FILL MANIFOLD TEE, 3" FILL SYSTEM	1
5	GA4550420	HANDLE EXTENSION, 85mm, 3" FULL PORT BALL VALVE, BANJO	1
6	GA5077719	HOSE BARB, ELBOW, 90 DEGREE, 1 MALE THREAD X 3/4 HOSE, BANJO	1
7	GA5077730	HOSE BARB, ELBOW, 90 DEGREE, 1 1/4" MALE THREAD X 1 1/4" HOSE, BANJO	1
8	GA5077708	HOSE BARB, ELBOW, 90 DEGREE, 1/2 MALE THREAD X 1/2 HOSE, BANJO, HB050-90	1
9	GA5077874	MANIFOLD HOSE BARB 3", 45 DEGREE, M300BRB45	1
10	GA2000345	PLUMBING FITTING, SWEPT ELBOW, 90, 3", M300 FLANGE, M300SWP90, BANJO	2
11	GA5076723	SEAL, EPDM, SUIT 3 FLANGE FITTING, BANJO, 300G	5
12	GA2000119	VALVE, BALL, 3" MANIFOLD FLANGE BOTH ENDS, STUBBY, BANJO, MVS300CFFP	1
GA4952660 GOLDACRES		PRODUCTION DRAWING ONLY. FILL MANIFOLD VALVE ASSEMBLY, WITH RINSE SOCKET, G4 S2, MY24	REV 00.B

Fill Manifold Inlet Assembly

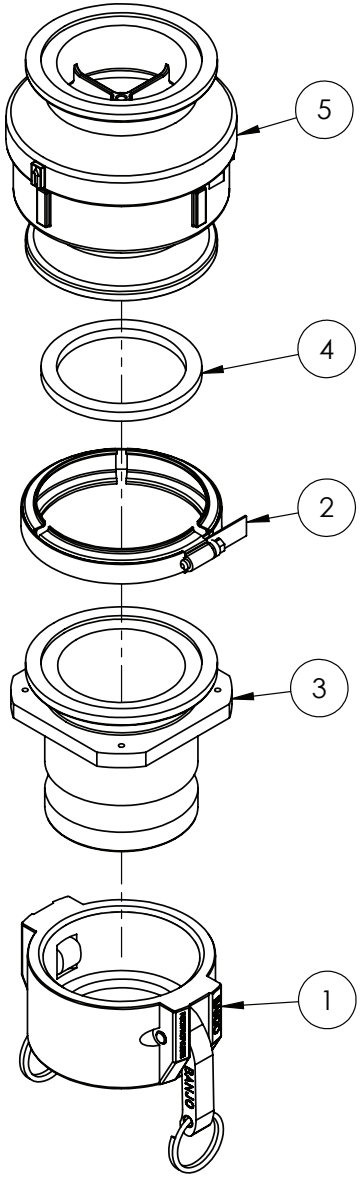

IF DESCRIPTION PREFIX IS ASSEMBLY DRAWING ONLY OR PRODUCTION DRAWING ONLY THE ITEM IS NOT FOR SALE			
ITEM	PART NUMBER	DESCRIPTION	QTY
1	GA5076719	CAM LEVER, 3" FEMALE CAP, BANJO	1
2	FC300	CLAMP, 3" FLANGE MANIFOLD, BANJO	1
3	GA4550410	FILL POINT FITTING, 3" MALE CAM LOCK X 3" FULL PORT FLANGE	1
4	GA5076723	SEAL, EPDM, SUIT 3 FLANGE FITTING, BANJO, 300G	1
5	GA2000088	VALVE, CHECK, 3"MANIFOLD, FULL PORT, FLANGE, BANJO	1
GA4952650 GOLDACRES		PRODUCTION DRAWING ONLY. FILL MANIFOLD INLET ASSEMBLY, G4 S2, MY24	REV 00

LH Pod, Flip Valve Manifold Mounting

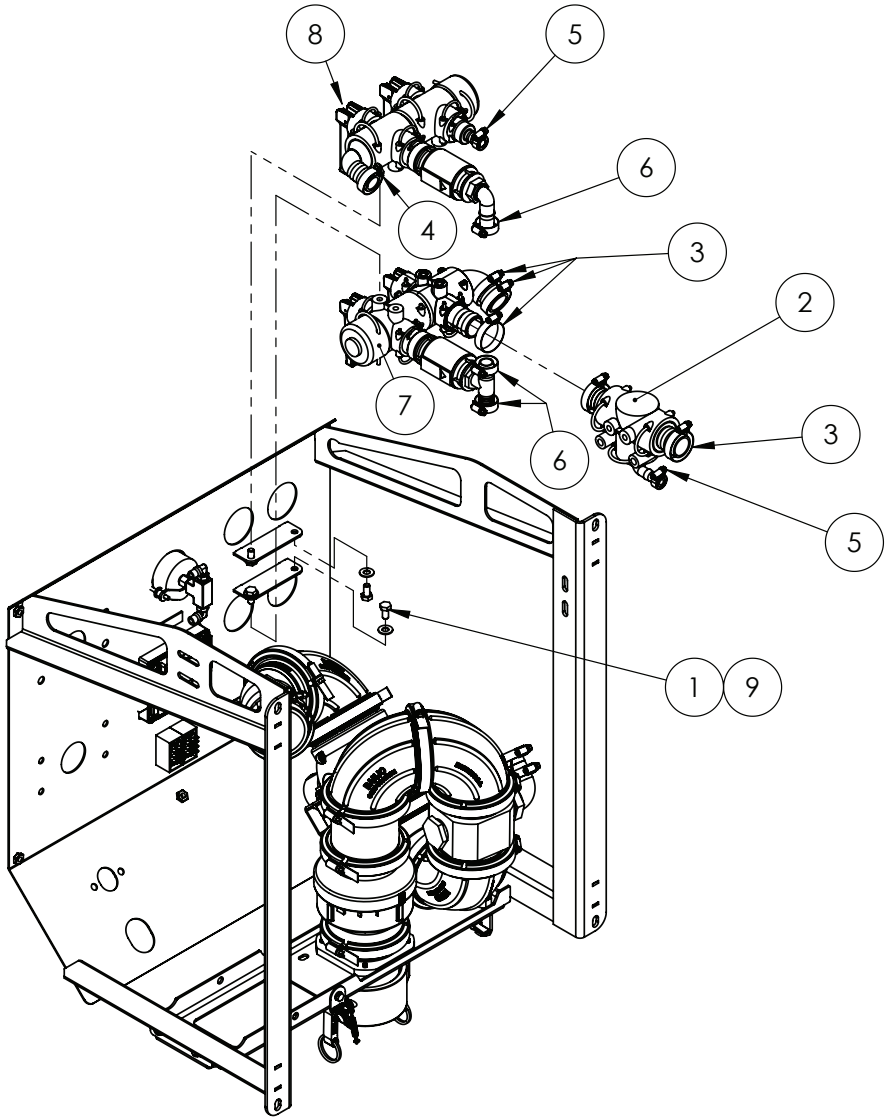

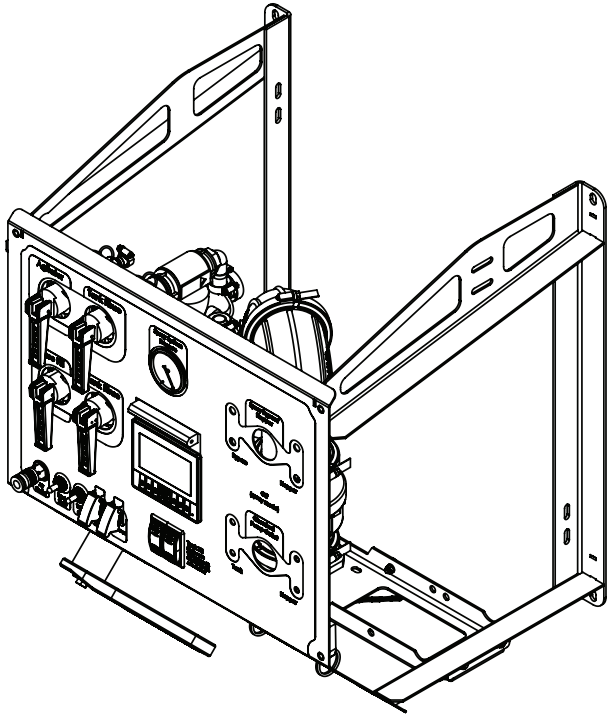

IF DESCRIPTION PREFIX IS ASSEMBLY DRAWING ONLY OR PRODUCTION DRAWING ONLY THE ITEM IS NOT FOR SALE			
ITEM	PART NUMBER	DESCRIPTION	QTY
1	GA5011465	BOLT M8 X 16 GR8.8 ZP	4
2	GA4902256	HOPPER TEE ASSEMBLY, PLUMBING POD, G4 S2, MY24	1
3	GA5002783	HOSE CLAMP, 1 1/4, SS (30-45/13W)	5
4	GA5001681	HOSE CLAMP, 1" SS (20-32/12W)	1
5	GA5000469	HOSE CLAMP, 1/2" SS 12-20/9W3	2
6	GA5000999	HOSE CLAMP, 3/4" SS (16-27/12W)	3
7	GA4952655	PRODUCTION DRAWING ONLY, FILL RINSE VALVE MANIFOLD, G4 S2, MY24	1
8	GA4952205	PRODUCTION DRAWING ONLY. PRESSURE RINSE VALVE MANIFOLD, G4 S2, MY24	1
9	GA5003643	WASHER 8mm FLAT SS HD	4
GA6101660-03 GOLDACRES		PLUMBING POD ASSEMBLY, G4 S2, MY24	REV 01

Flip Valve Manifold Assembly, Fill & Rinse Valve

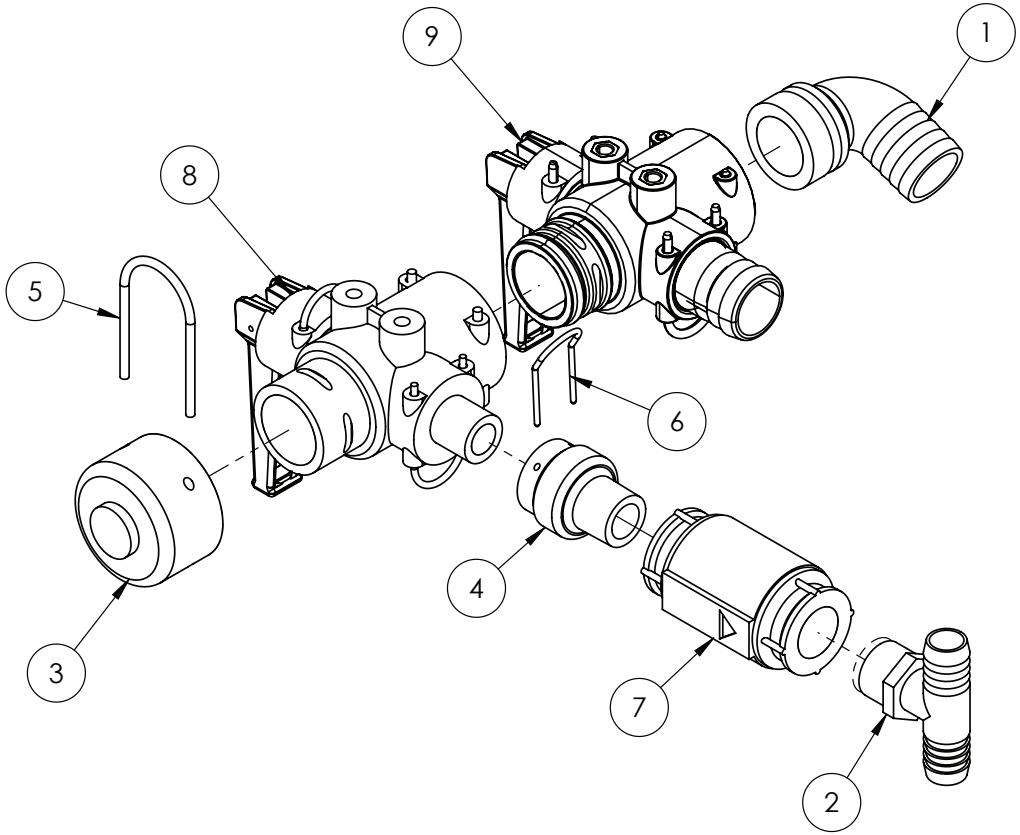

IF DESCRIPTION PREFIX IS ASSEMBLY DRAWING ONLY OR PRODUCTION DRAWING ONLY THE ITEM IS NOT FOR SALE			
ITEM	PART NUMBER	DESCRIPTION	QTY
1	GA5065620	HOSE BARB, ELBOW, 90 DEGREE, AS40 X 33mm HOSE BARB, ALTEK	1
2	GA3500431	HOSE BARB, TEE, 3/4" HOSE BARB X 3/4" HOSE BARB X 3/4" MALE THREAD	1
3	GA4582395	PLUMBING FITTING, CAP, AS40, ALTEK	1
4	GA4582415	PLUMBING ADAPTOR, AS24 FEMALE X 3/4" BSPT MALE, DELRIN	1
5	GA5065690	RETAINING PIN, SAFETY CLIP, SUIT AS40 PLUMBING FITTINGS, ALTEK	1
6	GA5065695	RETAINING PIN, SUIT AS24 PLUMBING FITTINGS, ALTEK	1
7	GA5002473	VALVE NON RETURN, CHECK 3/4"	1
8	GA5065545	VALVE, QUICK FIT FLIP TOP, 2 WAY, AS40 MALE X AS24 FEMALE X AS40 FEMALE, ALTEK	1
9	GA5065546	VALVE, QUICK FIT FLIP TOP, 2 WAY, AS40 MALE X AS30/33 1,1/4 BARB X AS40 FEMALE, ALTEK	1
GA4952655 GOLDACRES		PRODUCTION DRAWING ONLY, FILL RINSE VALVE MANIFOLD, G4 S2, MY24	REV 00.A

Flip Valve Assembly, Pressure Rinse Valve Manifold

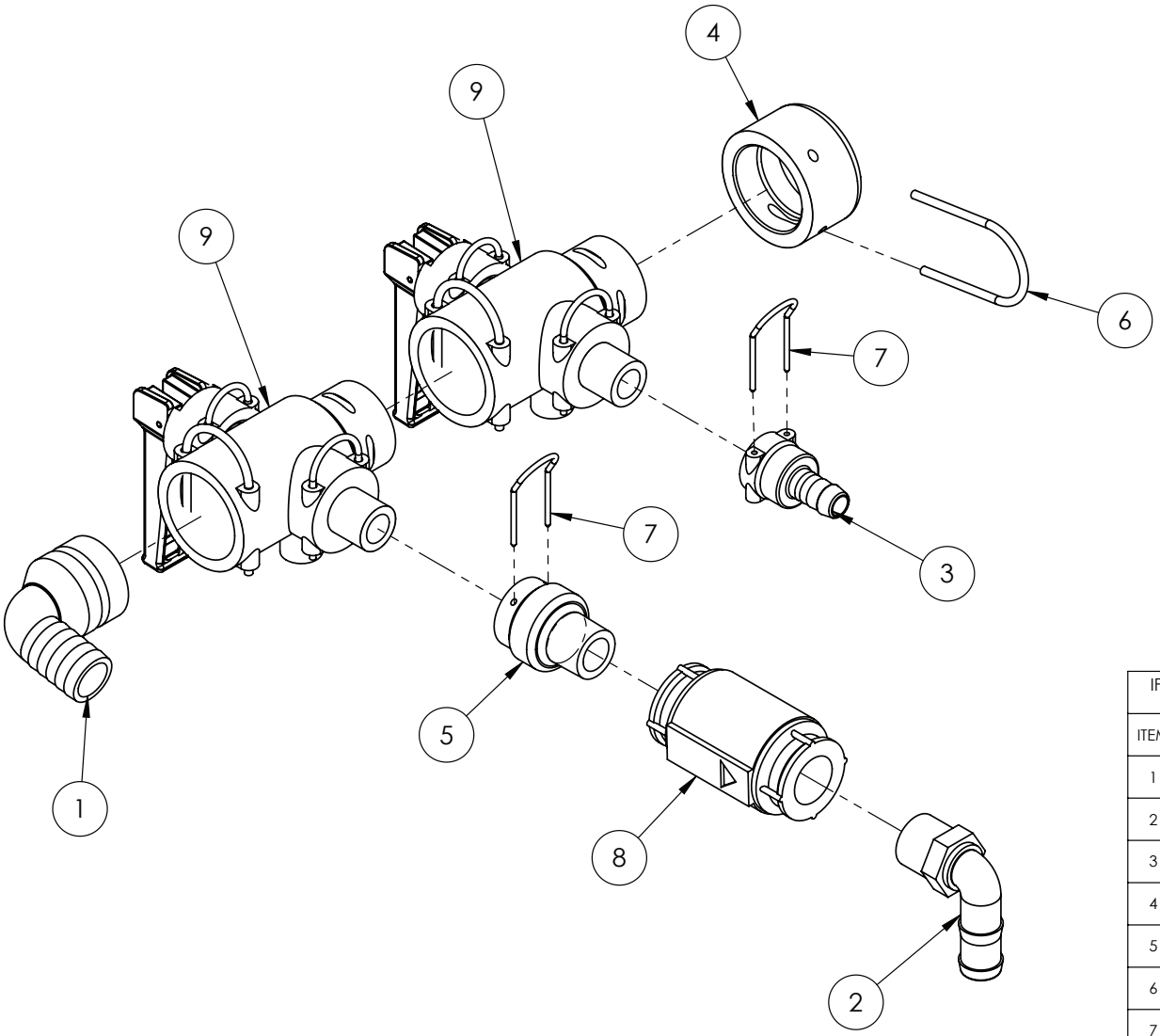

IF DESCRIPTION PREFIX IS ASSEMBLY DRAWING ONLY OR PRODUCTION DRAWING ONLY THE ITEM IS NOT FOR SALE			
ITEM	PART NUMBER	DESCRIPTION	QTY
1	GA5065615	HOSE BARB, ELBOW 90 DEGREE, AS40 X 25mm, ALTEK	1
2	GA5077717	HOSE BARB, ELBOW, 90 DEGREE, 3/4 MALE THREAD X 3/4 HOSE, BANJO	1
3	GA5065745	HOSE BARB, STRAIGHT, AS24 FEMALE X 15mm HOSE, ALTEK	1
4	GA4582395	PLUMBING FITTING, CAP, AS40, ALTEK	1
5	GA4582415	PLUMBING ADAPTOR, AS24 FEMALE X 3/4" BSPT MALE, DELRIN	1
6	GA5065690	RETAINING PIN, SAFETY CLIP, SUIT AS40 PLUMBING FITTINGS, ALTEK	1
7	GA5065695	RETAINING PIN, SUIT AS24 PLUMBING FITTINGS, ALTEK	2
8	GA5002473	VALVE NON RETURN, CHECK 3/4"	1
9	GA5065545	VALVE, QUICK FIT FLIP TOP, 2 WAY, AS40 MALE X AS24 FEMALE X AS40 FEMALE, ALTEK	2
GA4952205 GOLDACRES		PRODUCTION DRAWING ONLY. PRESSURE RINSE VALVE MANIFOLD, G4 S2, MY24	REV 00.A

Hopper Tee Assembly

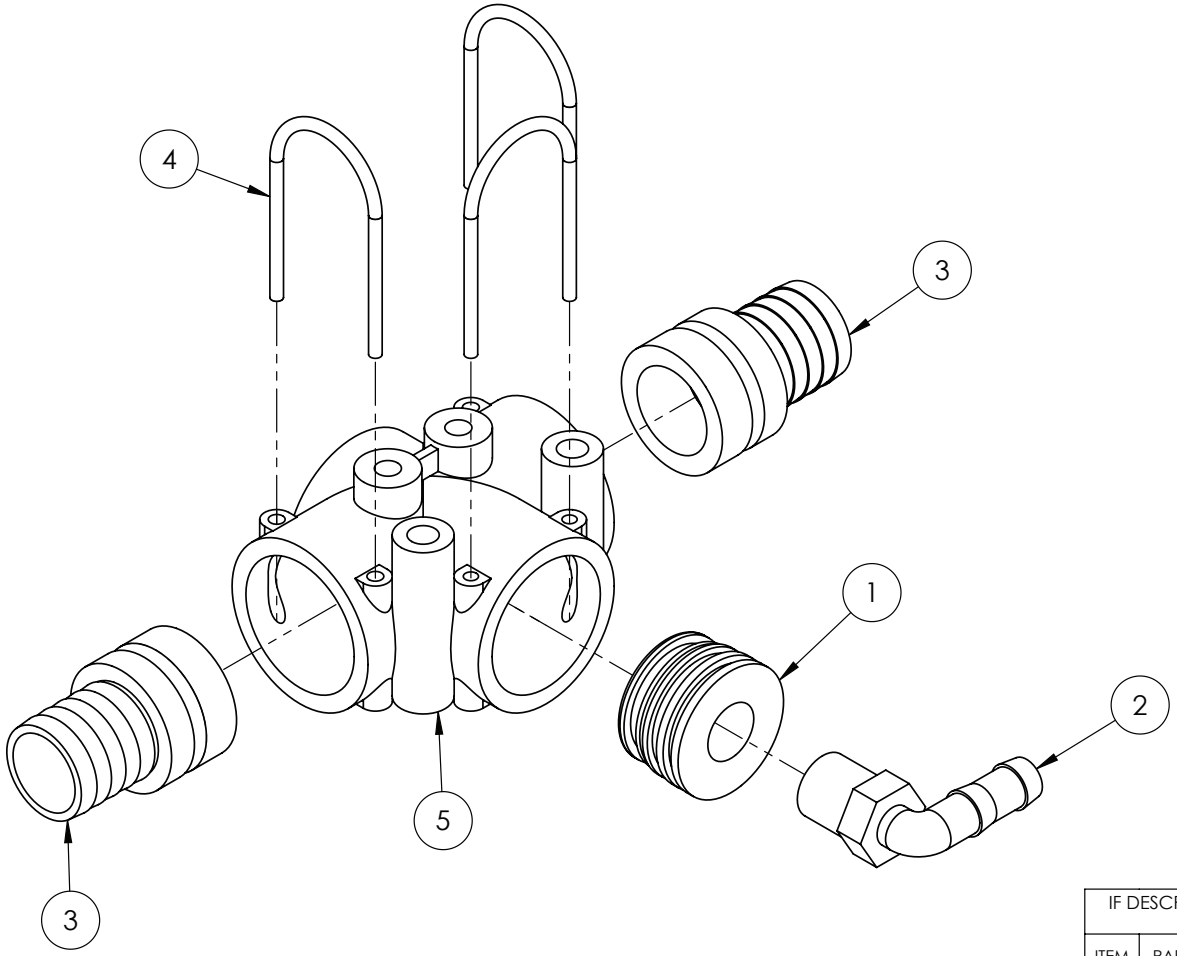

IF DESCRIPTION PREFIX IS ASSEMBLY DRAWING ONLY OR PRODUCTION DRAWING ONLY THE ITEM IS NOT FOR SALE			
ITEM	PART NUMBER	DESCRIPTION	QTY
1	GA4582345	DUMMY PLUG AS40 G1/2 FEMALE (45MM DELRON)	1
2	GA5077708	HOSE BARB, ELBOW, 90 DEGREE, 1/2 MALE THREAD X 1/2 HOSE, BANJO, HB050-90	1
3	GA5065585	PLUG IN HOSE TAIL AS40/33	2
4	GA5065690	RETAINING PIN, SAFETY CLIP, SUIT AS40 PLUMBING FITTINGS, ALTEK	3
5	GA5065555	TEE, 3 PORT, AS40 FEMALE, NO M8 INSERTS, ALTEK	1
GA4902256 GOLDACRES		HOPPER TEE ASSEMBLY, PLUMBING POD, G4 S2, MY24	REV 00.A

LH Pod, Blanking Plates

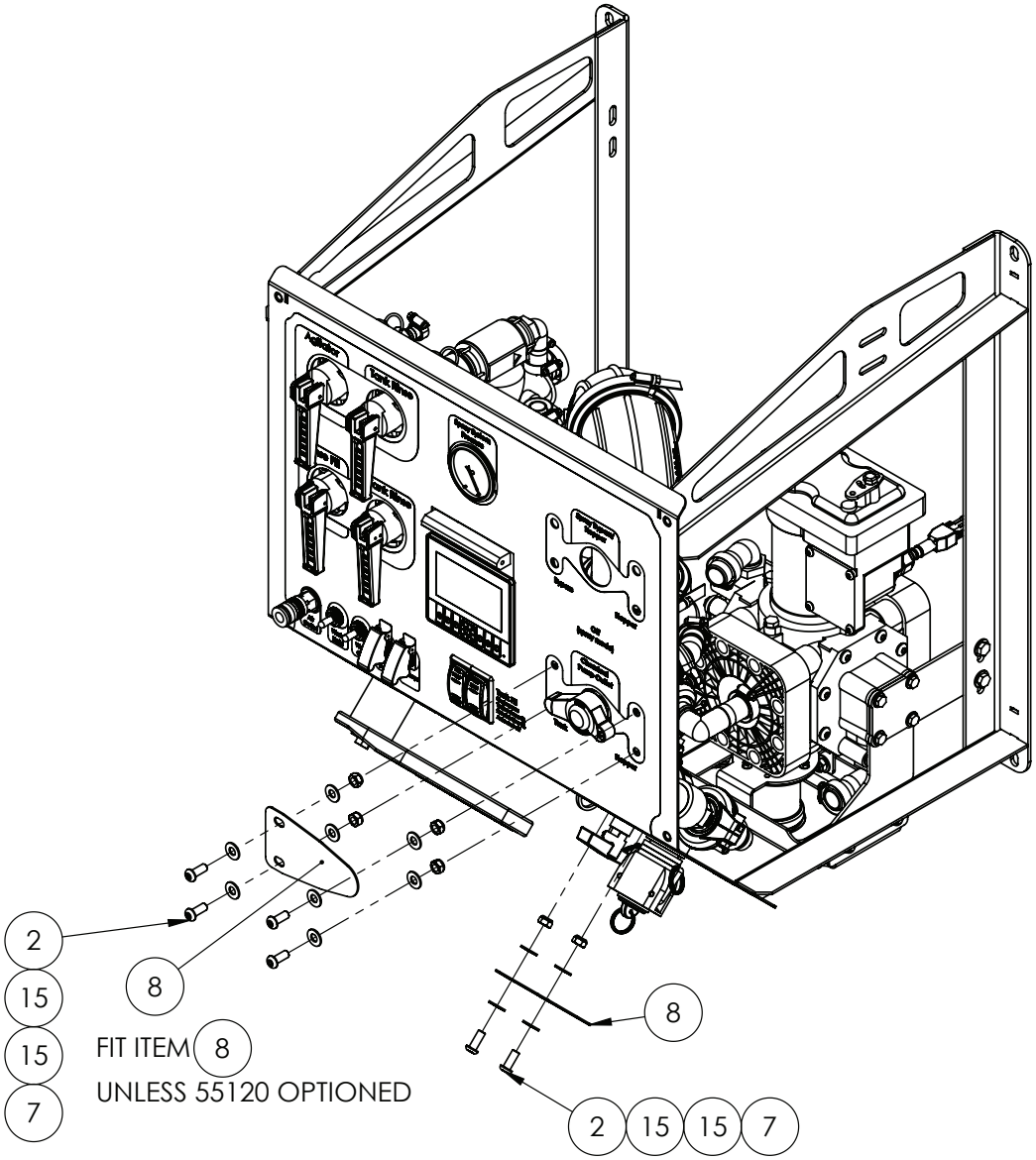

IF DESCRIPTION PREFIX IS ASSEMBLY DRAWING ONLY OR PRODUCTION DRAWING ONLY THE ITEM IS NOT FOR SALE			
ITEM	PART NUMBER	DESCRIPTION	QTY
1	GA0500004	BHCS M5 X 20 SS A2-70	3
2	GA0500102	BHCS M8 X 20 SS A2-70	6
3	GA5004085	BOLT M8 X 20 GR8.8 ZP	9
4	GA5001681	HOSE CLAMP, 1" SS (20-32/12W)	6
5	GA5000999	HOSE CLAMP, 3/4" SS (16-27/12W)	1
6	GA5003974	NUT M5 NYLOC ZP	3
7	GA5004917	NUT M8 NYLOC ZP	15
8	GA4410311	PLATE, LH POD, BLANKING PLATE, CHEM PUMP OUTLET VALVE, G4 S2, MY24	2
9	GA4414525	PLATE, MICROMATIC RINSE SOCKET MOUNT, G4 S2, MY24	1
10	GA4952220	PRODUCTION DRAWING ONLY, CHEMICAL PROBE AND PUMP INLET ASSEMBLY, G4 S2 MY24	1
11	GA4952215	PRODUCTION DRAWING ONLY, CHEMICAL PUMP ASSEMBLY, G4 S2 MY24	1
12	GA4952210	PRODUCTION DRAWING ONLY, VALVE, CHEMICAL PUMP OUTLET SELECTOR, G4 S2 MY24	1
13	GA5018800	RINSING SOCKET, 3 PIN, MICROMATIC / ENVIRO DRUM COUPLING	1
14	GA5003983	WASHER 5mm FLAT SS	3
15	GA5003643	WASHER 8mm FLAT SS HD	30
GA6101660-04 GOLDACRES	PLUMBING POD ASSEMBLY, G4 S2, MY24		REV 01

BUILD OPTIONS:
50020 - MICROMATIC RINSE SOCKET AND MICROMATIC COUPLER
55120 - CHEMICAL TRANSFER PUMP, (SOTERA) TANK OR HOPPER FILL

Chemical Pump, Outlet Selector & Micromatic Rinse Socket Mounting

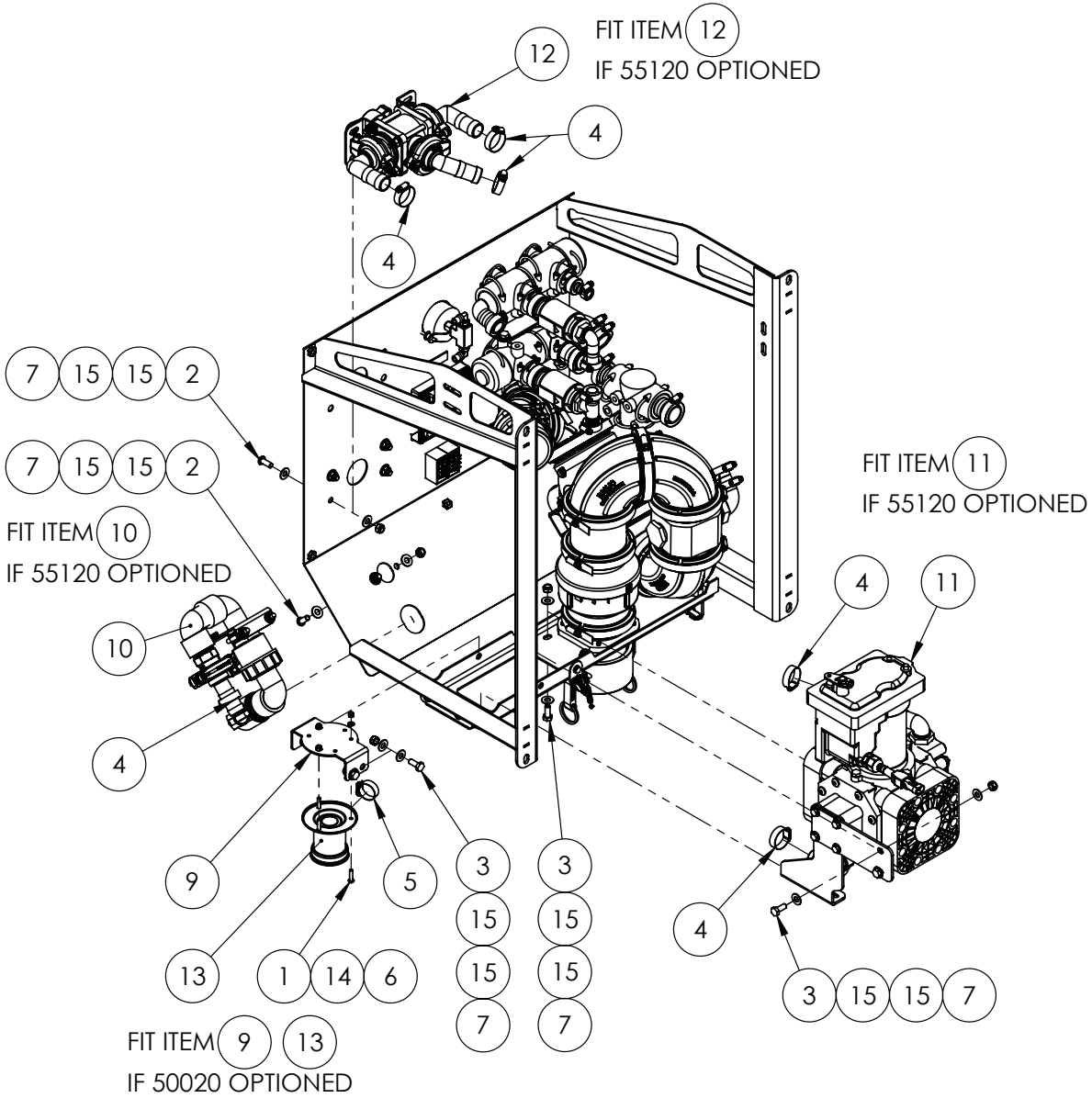

IF DESCRIPTION PREFIX IS ASSEMBLY DRAWING ONLY OR PRODUCTION DRAWING ONLY THE ITEM IS NOT FOR SALE			
ITEM	PART NUMBER	DESCRIPTION	QTY
1	GA0500004	BHCS M5 X 20 SS A2-70	3
2	GA0500102	BHCS M8 X 20 SS A2-70	6
3	GA5004085	BOLT M8 X 20 GR8.8 ZP	9
4	GA5001681	HOSE CLAMP, 1" SS (20-32/12W)	6
5	GA5000999	HOSE CLAMP, 3/4" SS (16-27/12W)	1
6	GA5003974	NUT M5 NYLOC ZP	3
7	GA5004917	NUT M8 NYLOC ZP	15
9	GA4414525	PLATE, MICROMATIC RINSE SOCKET MOUNT, G4 S2, MY24	1
10	GA4952220	PRODUCTION DRAWING ONLY, CHEMICAL PROBE AND PUMP INLET ASSEMBLY, G4 S2 MY24	1
11	GA4952215	PRODUCTION DRAWING ONLY, CHEMICAL PUMP ASSEMBLY, G4 S2 MY24	1
12	GA4952210	PRODUCTION DRAWING ONLY, VALVE, CHEMICAL PUMP OUTLET SELECTOR, G4 S2 MY24	1
13	GA5018800	RINSING SOCKET, 3 PIN, MICROMATIC / ENVIRO DRUM COUPLING	1
14	GA5003983	WASHER 5mm FLAT SS	3
15	GA5003643	WASHER 8mm FLAT SS HD	30
GA6101660-04 GOLDACRES		PLUMBING POD ASSEMBLY, G4 S2, MY24	REV 01

Chemical Probe & Pump Inlet Assembly

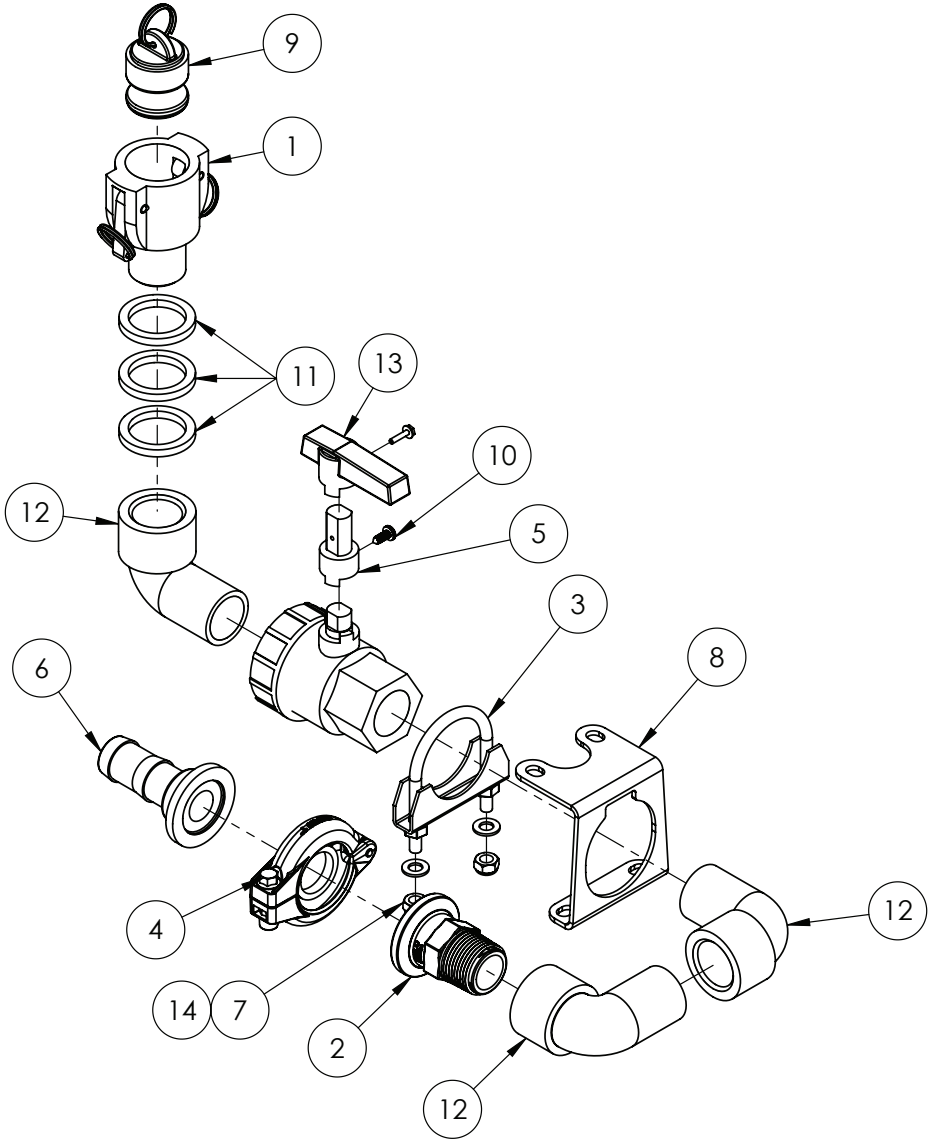

IF DESCRIPTION PREFIX IS ASSEMBLY DRAWING ONLY OR PRODUCTION DRAWING ONLY THE ITEM IS NOT FOR SALE			
ITEM	PART NUMBER	DESCRIPTION	QTY
1	GA5076007	CAM LEVER, 1 FEMALE COUPLER, 1 MALE THREAD, BANJO	1
2	GA5077820	COUPLING, FLANGED, 1 FLANGE X 1 MALE THREAD, BANJO	1
3	GA5006705	EXHAUST CLAMP C8 2"	1
4	GA2000113	FLANGE CLAMP, AND GASKET, 1", SERIES 100, HYPRO	1
5	GA4550425	HANDLE EXTENSION, 20mm, 1" UV100FP BALL VALVE, BANJO	1
6	GA5077811	HOSE BARB, STRAIGHT, 1 FLANGE X 1 HOSE, BANJO	1
7	GA5004917	NUT M8 NYLOC ZP	2
8	GA4414555	PLATE, 1" BALL VALVE MOUNT BRACKET	1
9	GA5076005	PLUG, 1", BANJO	1
10	GA5000043	SCREW PAN HEAD 10G X 1/2 SS	1
11	GA4552865	SPACER, RING, 34mm, POD FILL POINT FITTING	3
12	GA5078137	STREET ELBOW, 90 DEGREE, 1 MALE X 1 FEMALE, BANJO	3
13	GA5078164	VALVE, BALL, 1 FEMALE THREAD INLET / OUTLET, FULL PORT, LEVER HANDLE, BANJO	1
14	GA5003643	WASHER 8mm FLAT SS HD	2
GA4952220 GOLDACRES		PRODUCTION DRAWING ONLY, CHEMICAL PROBE AND PUMP INLET ASSEMBLY, G4 S2 MY24	REV 00.A

Chemical Pump Mounting Bracket Assembly

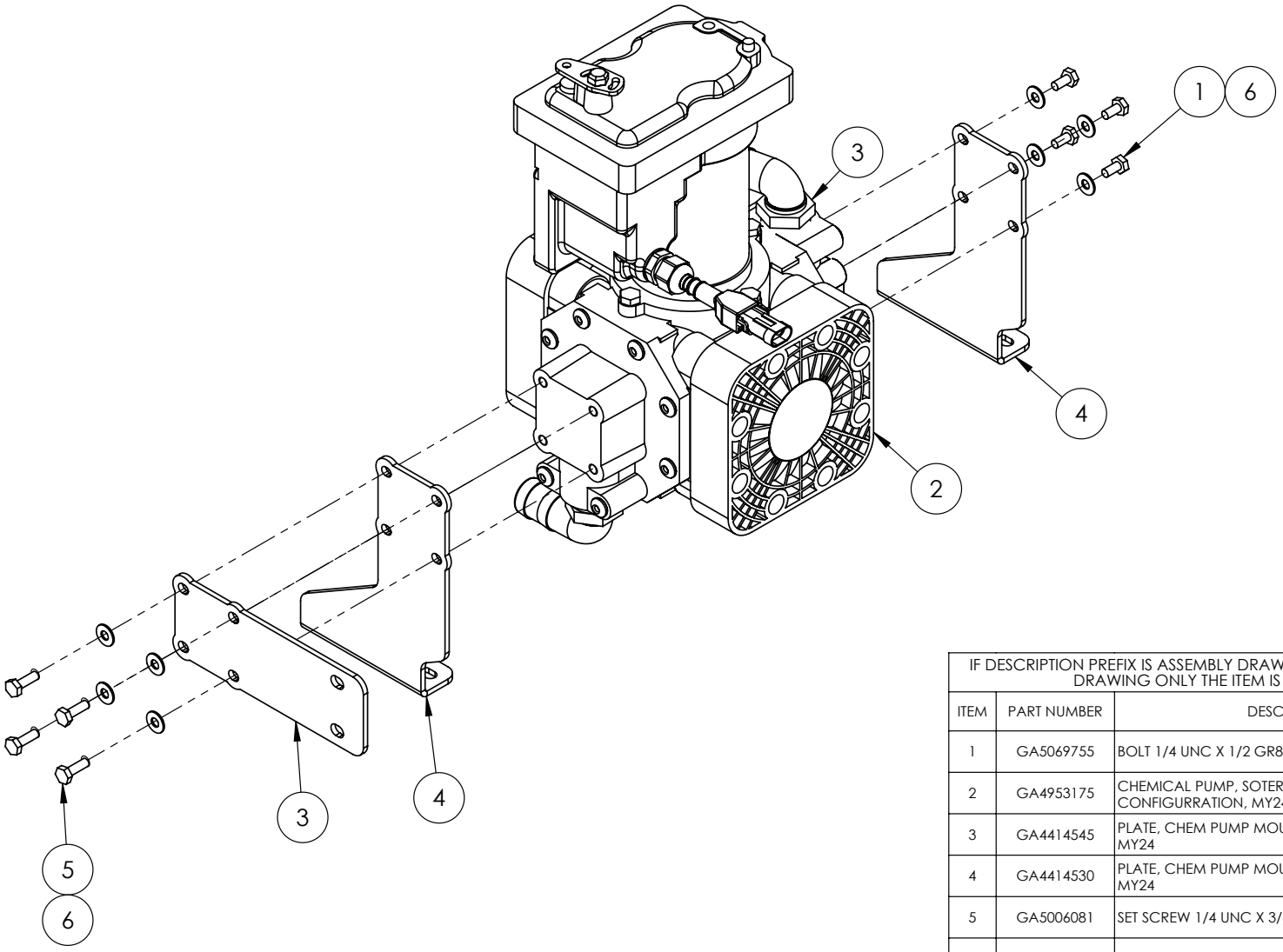

IF DESCRIPTION PREFIX IS ASSEMBLY DRAWING ONLY OR PRODUCTION DRAWING ONLY THE ITEM IS NOT FOR SALE			
ITEM	PART NUMBER	DESCRIPTION	QTY
1	GA5069755	BOLT 1/4 UNC X 1/2 GR8 ZP	4
2	GA4953175	CHEMICAL PUMP, SOTERA, PLUMBING POD CONFIGURRATION, MY24	1
3	GA4414545	PLATE, CHEM PUMP MOUNTING BRACKET 2, G4 S2, MY24	1
4	GA4414530	PLATE, CHEM PUMP MOUNTING BRACKET, G4 S2, MY24	2
5	GA5006081	SET SCREW 1/4 UNC X 3/4 GR8 ZP	4
6	GA5017643	WASHER 1/4 ID X 5/8 OD X 18G FLAT SS	8
GA4952215 GOLDACRES		PRODUCTION DRAWING ONLY, CHEMICAL PUMP ASSEMBLY, G4 S2 MY24	REV 00.A

Chemical Pump Electrical Connector & Hose Barb Fitment

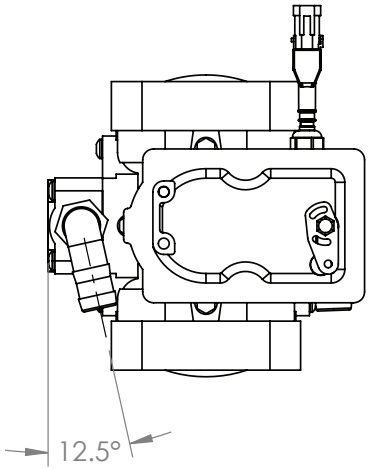

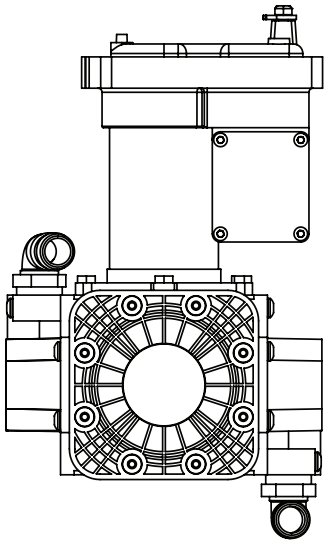

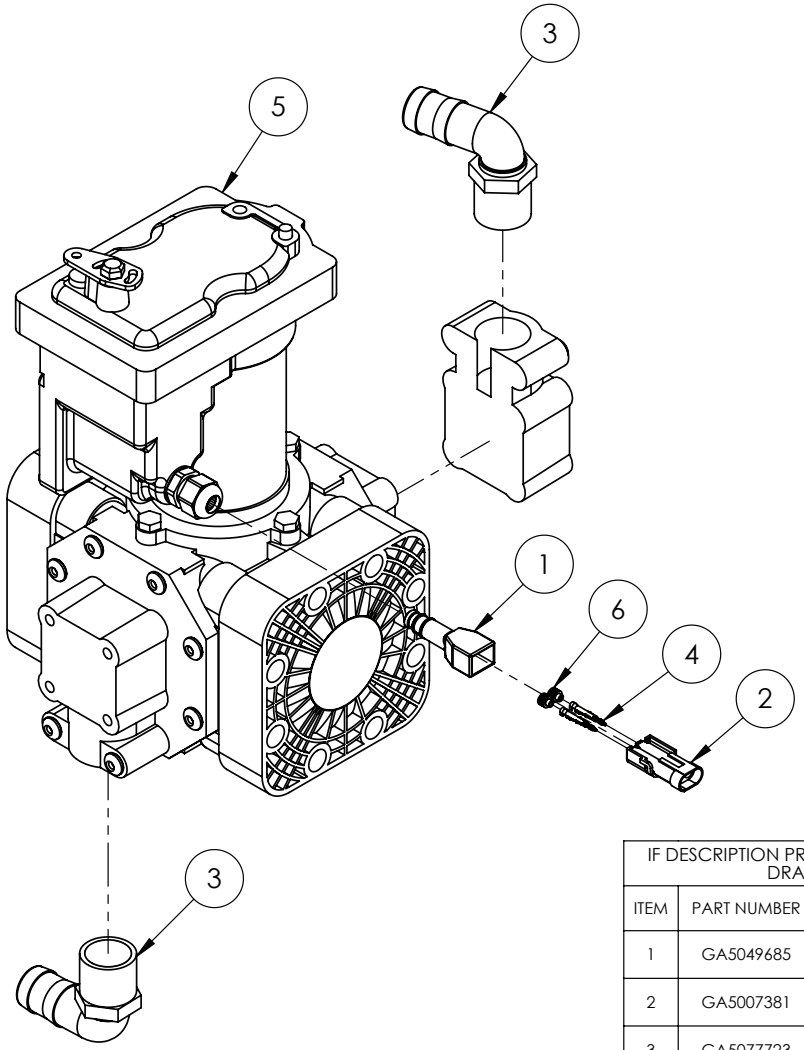

IF DESCRIPTION PREFIX IS ASSEMBLY DRAWING ONLY OR PRODUCTION DRAWING ONLY THE ITEM IS NOT FOR SALE			
ITEM	PART NUMBER	DESCRIPTION	QTY
1	GA5049685	BOOT, WEATHER PACK, SUIT 2 PIN CONNECTOR	1
2	GA5007381	FEMALE 2 PIN CONNECTOR	1
3	GA5077723	HOSE BARB, ELBOW, 90 DEGREE, 1" MALE X 1" HOSE, BANJO	2
4	GA5016617	PIN, MALE, SEALED, WEATHER PACK, WIRE 1.0 - 2.0mm	2
5	GA5072100	PUMP, CHEMICAL TRANSFER, 12V DC, EXPLOSION PROOF, SOTERA	1
6	GA5014857	SEAL FOR WEATHER PACK CONNECTORS (GREEN)	2
GA4953175 GOLDACRES		CHEMICAL PUMP, SOTERA, PLUMBING POD CONFIGURRATION, MY24	REV 00.A

Valve Assembly, Chemical Pump Outlet Selector

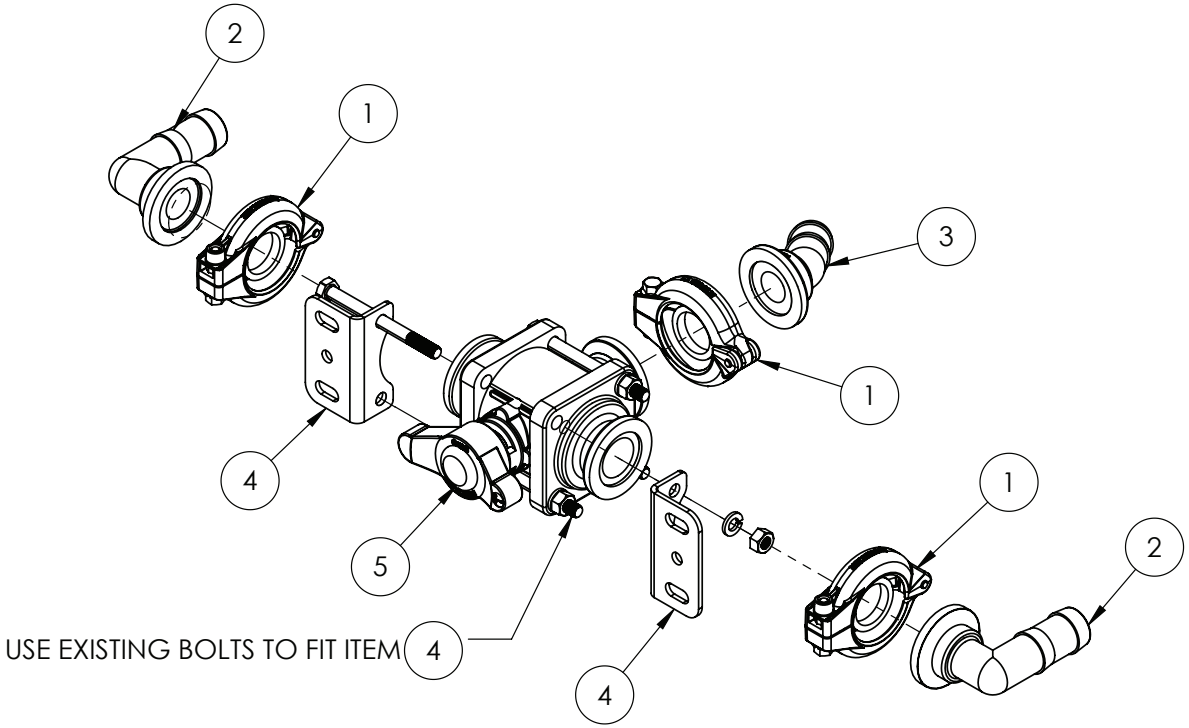

IF DESCRIPTION PREFIX IS ASSEMBLY DRAWING ONLY OR PRODUCTION DRAWING ONLY THE ITEM IS NOT FOR SALE			
ITEM	PART NUMBER	DESCRIPTION	QTY
1	GA2000113	FLANGE CLAMP, AND GASKET, 1", SERIES 100, HYPRO	3
2	GA5077812	HOSE BARB, ELBOW, 90 DEGREE, 1 FLANGE X 1 HOSE, BANJO	2
3	GA5078650	HOSE BARB, 45 DEGREE, 1 FLANGE X 1 HOSE, BANJO, M100BRB45	1
4	GA4502210	PLATE - BALL VALVE MOUNTING	2
5	GA5077899	VALVE, BALL, 3 WAY, 1 FLANGE INLETS / OUTLETS, BANJO, MV100BL	1
GA4952210 GOLDACRES		PRODUCTION DRAWING ONLY, VALVE, CHEMICAL PUMP OUTLET SELECTOR, G4 S2 MY24	REV 00.B

LH Pod, Control Manifold & Wash Down Pump Mounting (3TS Options)

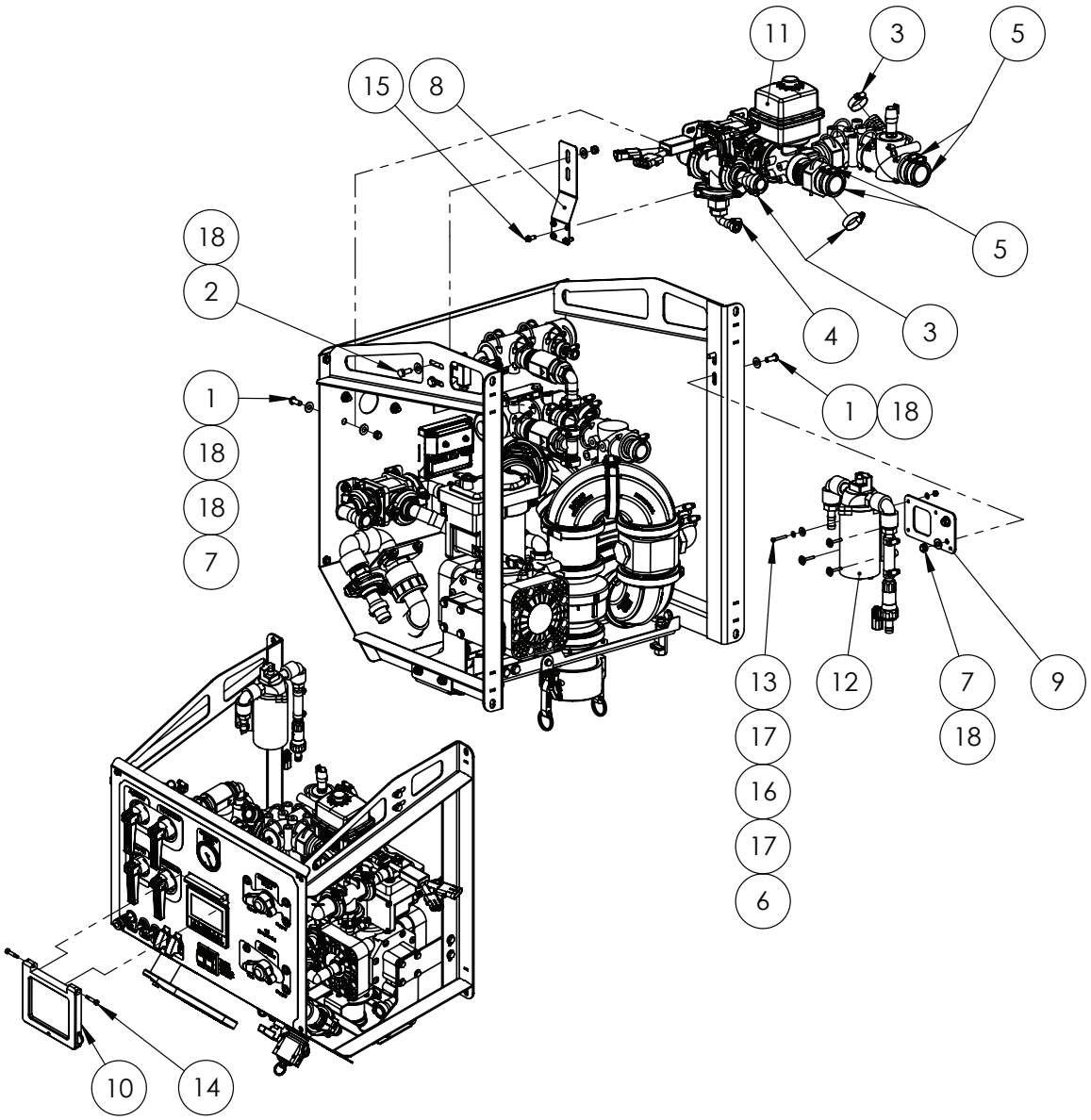

IF DESCRIPTION PREFIX IS ASSEMBLY DRAWING ONLY OR PRODUCTION DRAWING ONLY THE ITEM IS NOT FOR SALE			
ITEM	PART NUMBER	DESCRIPTION	QTY
1	GA0500102	BHCS M8 X 20 SS A2-70	6
2	GA5004085	BOLT M8 X 20 GR8.8 ZP	2
3	GA5001681	HOSE CLAMP, 1" SS (20-32/12W)	3
4	GA5000469	HOSE CLAMP, 1/2" SS 12-20/9W3	1
5	GA5002873	HOSE CLAMP, 1 1/2" SS (32-50/12W)	4
6	GA5003501	NUT M4 NYLOC ZP	4
7	GA5004917	NUT M8 NYLOC ZP	8
8	GA4414600	PLATE, BRACKET, KZ VALVE, G4, S2, MY24	1
9	GA4414550	PLATE, 12V WASH PUMP MOUNT, G4 S2, MY24	1
10	GA4952275	PRODUCTION DRAWING ONLY. FLIP UP SCREEN PROTECTOR, LH POD, G4 S2, MY24	1
11	GA4952195	PRODUCTION DRAWING ONLY. SPRAY PRESSURE CONTROL MANIFOLD, G4 S2, MY24	1
12	GA4949515	PUMP ASSEMBLY, WASH DOWN GUN, G6 MY20	1
13	GA5011367	SHCS M4 X 30 GR12.9 ZP	4
14	GA0500158	SHSS, M5 X 20, GR12.9	2
15	GA0500022	SET SCREW SELF TAPPING TRILOBE M6 X 16 ZP	4
16	GA5017643	WASHER 1/4 ID X 5/8 OD X 18G FLAT SS	4
17	GA5020510	WASHER 4mm FLAT SS	8
18	GA5003643	WASHER 8mm FLAT SS HD	16
GA6101660-05 GOLDACRES		PLUMBING POD ASSEMBLY, G4 S2, MY24	REV 01

BUILD OPTIONS:
10061 - 3TS RAPID FIRE AND RAPID FLOW 250mm SPACING (STAGGERED)
10067 - 3TS RAPID FIRE WITH RAPID FLOW 250mm SPACING (STAGGERED) WITH TRIJETS ON TIER 1
10069 - 3TS RAPID FIRE WITH RAPID FLOW 250mm SPACING (STAGGERED) WITH TRIJETS ON TIERS 1 & 2
10073 - 3TS PRO (MUST SELECT RCM IF NOT STANDARD)

LH Pod, Control Manifold & Wash Down Pump Mounting (Hawkeye Options)

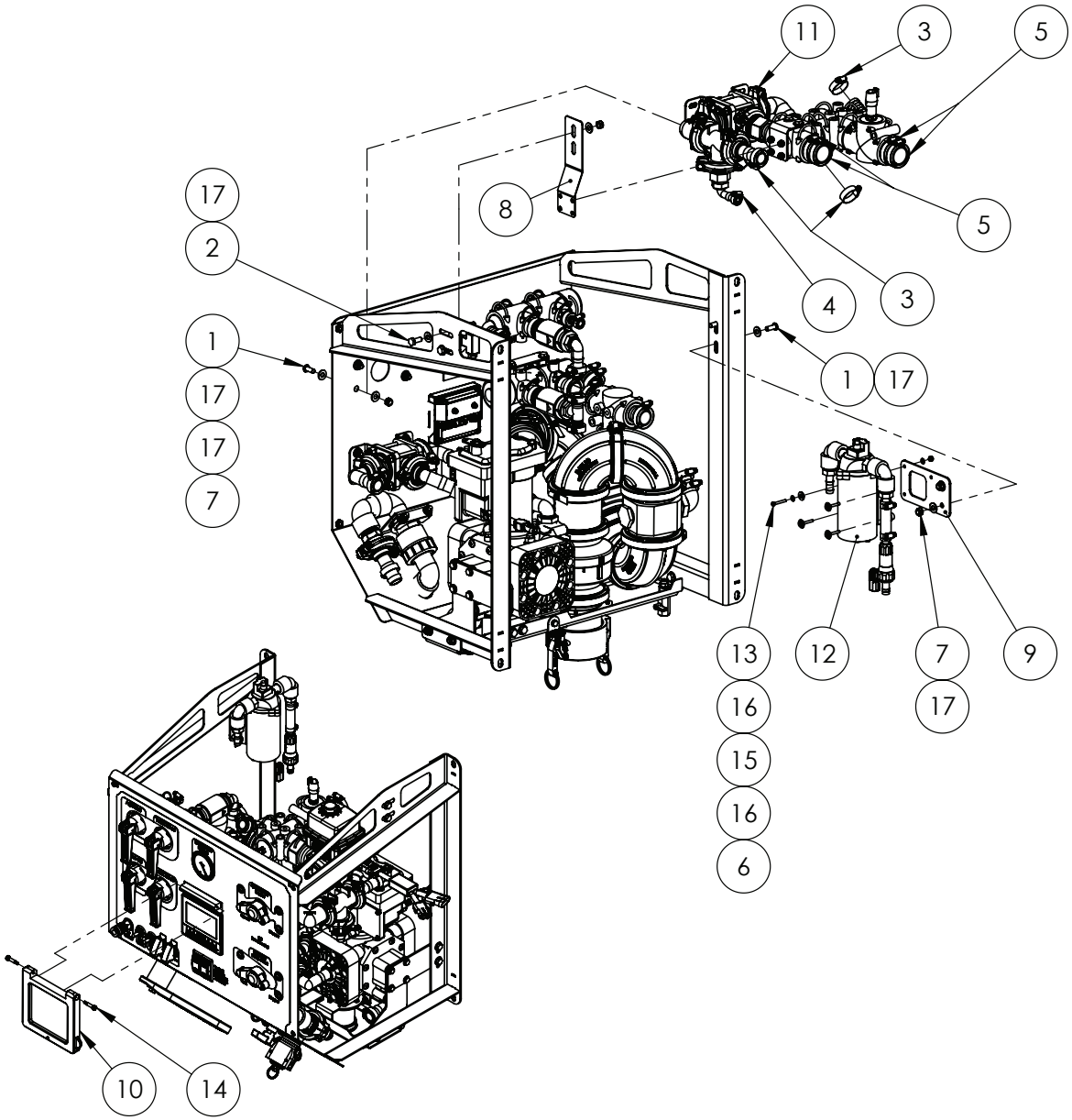

BUILD OPTIONS:
10073 - HAWKEYE 2ND GENERATION PWM SYSTEM - 250mm SPACING
10074 - HAWKEYE 2ND GENERATION PWM SYSTEM - 500mm SPACING

IF DESCRIPTION PREFIX IS ASSEMBLY DRAWING ONLY OR PRODUCTION DRAWING ONLY THE ITEM IS NOT FOR SALE			
ITEM	PART NUMBER	DESCRIPTION	QTY
1	GA0500102	BHCS M8 X 20 SS A2-70	6
2	GA5004085	BOLT M8 X 20 GR8.8 ZP	2
3	GA5001681	HOSE CLAMP, 1" SS (20-32/12W)	3
4	GA5000469	HOSE CLAMP, 1/2" SS 12-20/9W3	1
5	GA5002873	HOSE CLAMP, 1 1/2" SS (32-50/12W)	4
6	GA5003501	NUT M4 NYLOC ZP	4
7	GA5004917	NUT M8 NYLOC ZP	8
8	GA4414600	PLATE, BRACKET, KZ VALVE, G4, S2, MY24	1
9	GA4414550	PLATE, 12V WASH PUMP MOUNT, G4 S2, MY24	1
10	GA4952275	PRODUCTION DRAWING ONLY. FLIP UP SCREEN PROTECTOR, LH POD, G4 S2, MY24	1
11	GA4952196	PRODUCTION DRAWING ONLY. SPRAY PRESSURE MANIFOLD, HAWKEYE, G4 S2, MY24	1
12	GA4949515	PUMP ASSEMBLY, WASH DOWN GUN, G6 MY20	1
13	GA5011367	SHCS M4 X 30 GR12.9 ZP	4
14	GA0500158	SHSS, M5 X 20, GR12.9	2
15	GA5017643	WASHER 1/4 ID X 5/8 OD X 18G FLAT SS	4
16	GA5020510	WASHER 4mm FLAT SS	8
17	GA5003643	WASHER 8mm FLAT SS HD	16
GA6101660-05 GOLDACRES		PLUMBING POD ASSEMBLY, G4 S2, MY24	REV 01

LH Pod, Flip up Screen Protector

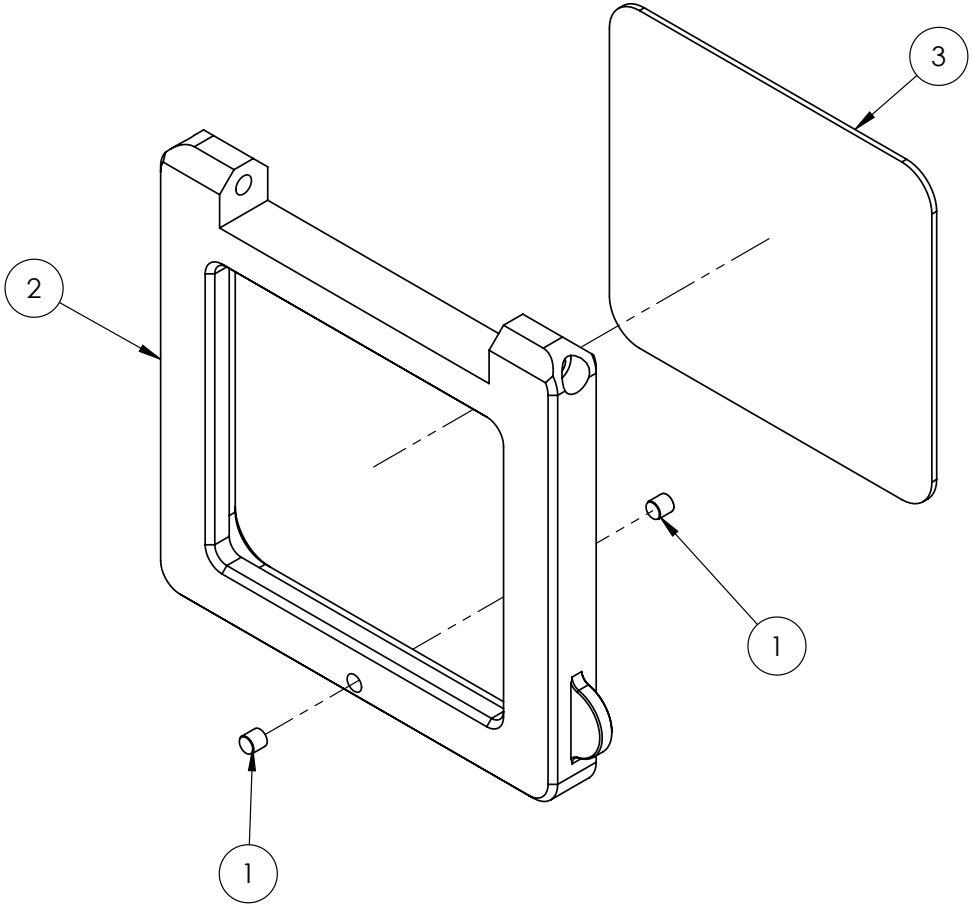

IF DESCRIPTION PREFIX IS ASSEMBLY DRAWING ONLY OR PRODUCTION DRAWING ONLY THE ITEM IS NOT FOR SALE			
ITEM	PART NUMBER	DESCRIPTION	QTY
1	GA5016170	MAGNET, RARE EARTH, 6mm DIAMETER X 6.0mm ROD	2
2	GA4562425	SCREEN COVER, FRAME, PLUMBING POD, G4 S2, MY24	1
3	GA4562430	SCREEN COVER, WINDOW, PLUMBING POD, G4 S2, MY24	1
GA4952275 GOLDACRES		PRODUCTION DRAWING ONLY. FLIP UP SCREEN PROTECTOR, LH POD, G4 S2, MY24	REV 00.A

Spray Pressure Control Manifold Assembly (3TS Options)

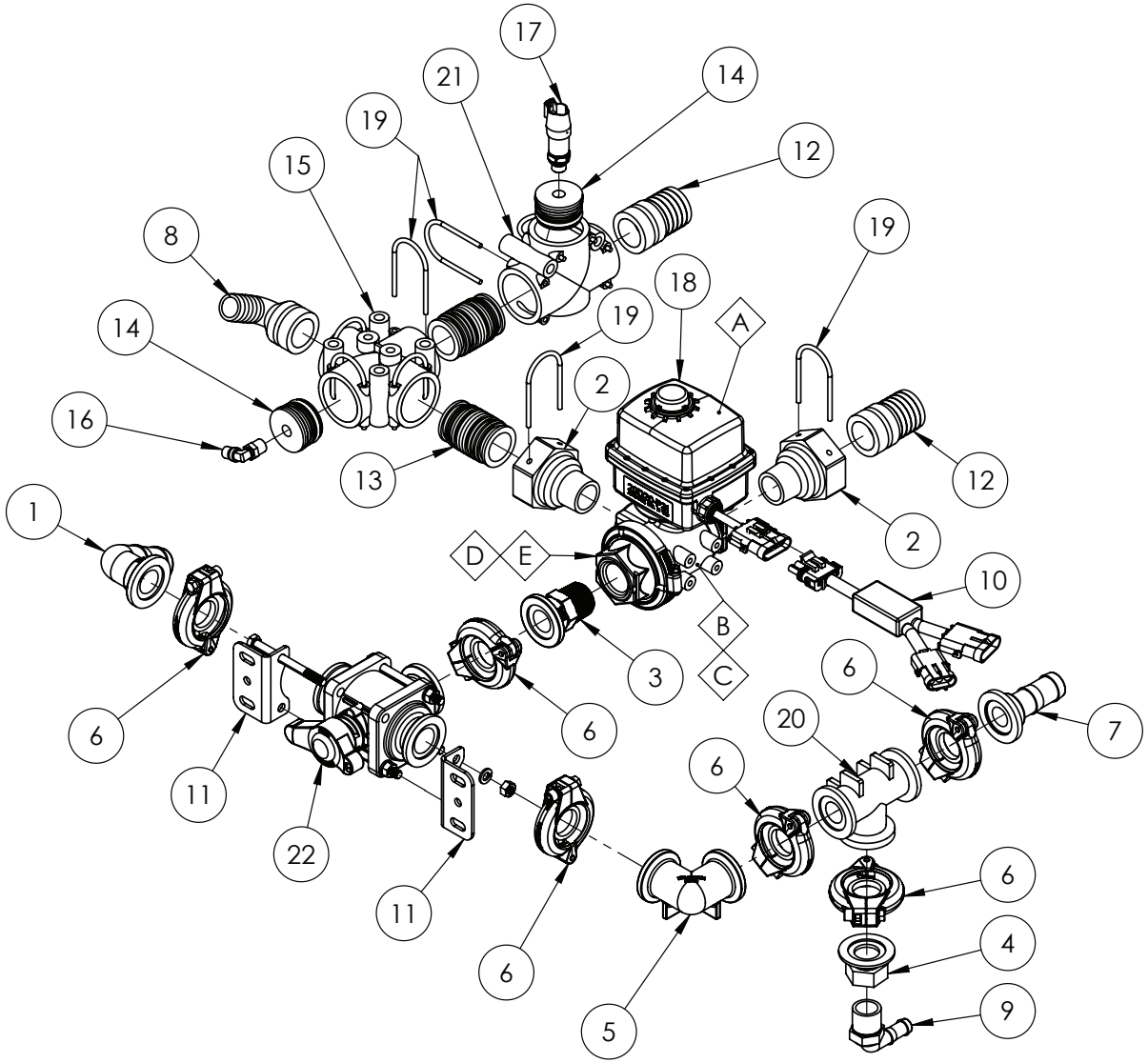

REPLACEMENT PARTS			
ITEM	PART NUMBER	DESCRIPTION	QTY
A	GA2000066	REGULATOR VALVE, ACTUATOR ONLY, 0.8 SEC 12V, SUIT GA2000065, KZ VALVE	-
B	GA2000067	REGULATOR VALVE, VALVE ONLY, SUIT GA2000065, KZ VALVE	-
C	GA5026754	KIT, REPAIR, VALVE, KZ, SUIT, GA2000067	-
D	GA5026753	V-CLAMP, 2", SP FLANGE, KZ VALVE	
E	GA5026755	NUT, RETAINING, HEX, KZ-VALVE, SUIT, GA200066	-

IF DESCRIPTION PREFIX IS ASSEMBLY DRAWING ONLY OR PRODUCTION DRAWING ONLY THE ITEM IS NOT FOR SALE			
ITEM	PART NUMBER	DESCRIPTION	QTY
1	GA5077807	1" FLANGE X 1 1/4" BARB, ELBOW, 90 DEGREE, M100125BRB90	1
2	GA4582385	COUPLING ALTEK AS40 TO 1" NPT MALE THREAD	2
3	GA5077820	COUPLING, FLANGED, 1 FLANGE X 1 MALE THREAD, BANJO	1
4	GA5077804	COUPLING, 1" FLANGE X 3/4" FEMALE THREAD, BANJO	1
5	GA5077815	ELBOW, 90 DEGREE, 1" FLANGE X 1" FLANGE, BANJO	1
6	GA2000113	FLANGE CLAMP, AND GASKET, 1", SERIES 100, HYPRO	6
7	GA5077811	HOSE BARB, STRAIGHT, 1 FLANGE X 1 HOSE, BANJO	1
8	GA5065615	HOSE BARB, ELBOW 90 DEGREE, AS40 X 25mm, ALTEK	1
9	GA5077710	HOSE BARB, ELBOW, 90 DEGREE, 3/4 MALE THREAD X 1/2 HOSE, BANJO	1
10	GA5060059	LOOM BOOM RECIRC BYPASS MODULE	1
11	GA4502210	PLATE - BALL VALVE MOUNTING	2
12	GA5065590	PLUG IN HOSE TAIL AS40/39	2
13	GA5065735	PLUG IN HOSE TAIL AS40/AS40	2
14	GA4582160	PLUMBING ADAPTOR, PLUG, AS40 MALE X G1/4" FEMALE THREAD, ALTEK	2
15	GA5065565	PLUMBING COUPLING, CROSS, AS40 FEMALE INLETS / OUTLETS, ALTEK	1
16	GA5016233	PNEUMATIC FITTING, ELBOW, 90 DEGREE, 1/4 BSP MALE X 6mm PUSH IN TYPE, METAL	1
17	GA3000316	PRESSURE SENSOR TRANSDUCER, 0-25 BAR, 0.5-4.5V, IFM	1
18	GA2000065	REGULATOR VALVE, 1" NPT, FULL PORT, 3 WAY, 0.8 SEC 12V, KZ VALVE	1
19	GA5065690	RETAINING PIN, SAFETY CLIP, SUIT AS40 PLUMBING FITTINGS, ALTEK	9
20	GA5077823	TEE, 1 FLANGE X 1 FLANGE X 1 FLANGE, BANJO, M100TEE	1
21	GA5065555	TEE, 3 PORT, AS40 FEMALE, NO M8 INSERTS, ALTEK	1
22	GA5077899	VALVE, BALL, 3 WAY, 1 FLANGE INLETS / OUTLETS, BANJO, MV100BL	1
GA4952195 GOLDACRES		PRODUCTION DRAWING ONLY. SPRAY PRESSURE CONTROL MANIFOLD, G4 S2, MY24	REV 00.A

Spray Pressure Control Manifold Assembly (Hawkeye Options)

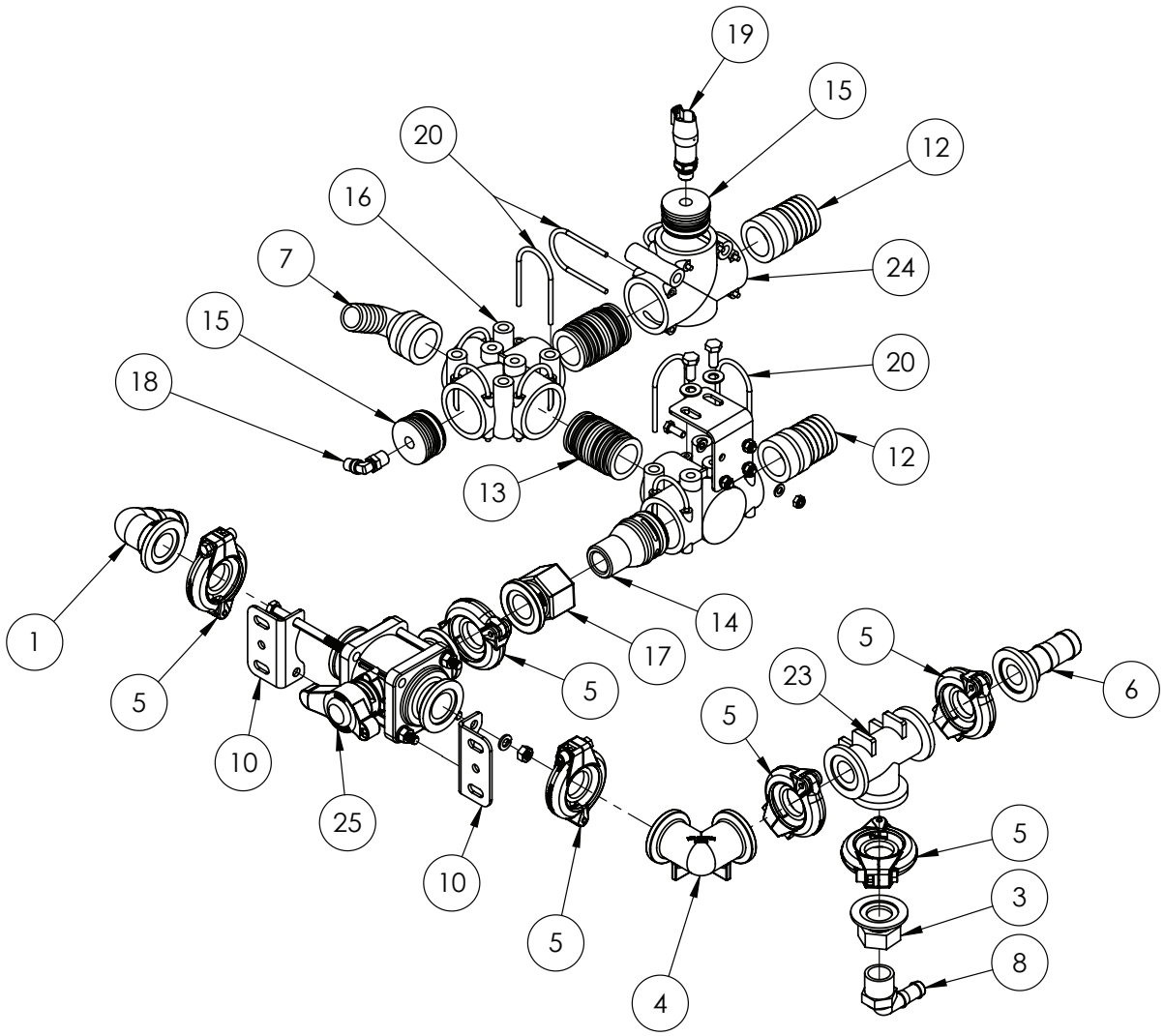

IF DESCRIPTION PREFIX IS ASSEMBLY DRAWING ONLY OR PRODUCTION DRAWING ONLY THE ITEM IS NOT FOR SALE			
ITEM	PART NUMBER	DESCRIPTION	QTY
1	GA5077807	1" FLANGE X 1 1/4" BARB, ELBOW, 90 DEGREE, M100125BRB90	1
2	GA5004085	BOLT M8 X 20 GR8.8 ZP	2
3	GA5077804	COUPLING, 1" FLANGE X 3/4" FEMALE THREAD, BANJO	1
4	GA5077815	ELBOW, 90 DEGREE, 1" FLANGE X 1" FLANGE, BANJO	1
5	GA2000113	FLANGE CLAMP, AND GASKET, 1", SERIES 100, HYPRO	6
6	GA5077811	HOSE BARB, STRAIGHT, 1 FLANGE X 1 HOSE, BANJO	1
7	GA5065615	HOSE BARB, ELBOW 90 DEGREE, AS40 X 25mm, ALTEK	1
8	GA5077710	HOSE BARB, ELBOW, 90 DEGREE, 3/4 MALE THREAD X 1/2 HOSE, BANJO	1
9	GA5048115	NUT M6 NYLOC ZP	4
10	GA4502210	PLATE - BALL VALVE MOUNTING	2
11	GA4415730	PLATE, BRACKET, SPRAY PRESSURE MANIFOLD, G4 S2, MY24	1
12	GA5065590	PLUG IN HOSE TAIL AS40/39	2
13	GA5065735	PLUG IN HOSE TAIL AS40/AS40	2
14	GA2000077	PLUMBING FITTING, AS40 TO 1" NPT MALE THREAD, ALTEK	1
15	GA4582160	PLUMBING ADAPTOR, PLUG, AS40 MALE X G1/4" FEMALE THREAD, ALTEK	2
16	GA5065565	PLUMBING COUPLING, CROSS, AS40 FEMALE INLETS / OUTLETS, ALTEK	1
17	GA5077817	PLUMBING COUPLING, 1" FLANGE X 1" FEMALE THREAD, BANJO	1
18	GA5016233	PNEUMATIC FITTING, ELBOW, 90 DEGREE, 1/4 BSP MALE X 6mm PUSH IN TYPE, METAL	1
19	GA3000316	PRESSURE SENSOR TRANSDUCER, 0-25 BAR, 0.5-4.5V, IFM	1
20	GA5065690	RETAINING PIN, SAFETY CLIP, SUIT AS40 PLUMBING FITTINGS, ALTEK	10
21	GA5011395	SET SCREW M6 X 16 SS A2-70	4
22	GA5065560	T-PIECE 3XAS40 M8 INSERTS	1
23	GA5077823	TEE, 1 FLANGE X 1 FLANGE X 1 FLANGE, BANJO, M100TEE	1
24	GA5065555	TEE, 3 PORT, AS40 FEMALE, NO M8 INSERTS, ALTEK	1
25	GA5077899	VALVE, BALL, 3 WAY, 1 FLANGE INLETS / OUTLETS, BANJO, MV100BL	1
26	GA5004437	WASHER 6mm FLAT SS	8
27	GA5003643	WASHER 8mm FLAT SS HD	2
GA4952196 GOLDACRES		PRODUCTION DRAWING ONLY. SPRAY PRESSURE MANIFOLD, HAWKEYE, G4 S2, MY24	REV 00.A

Pump Assembly, Wash Down Gun

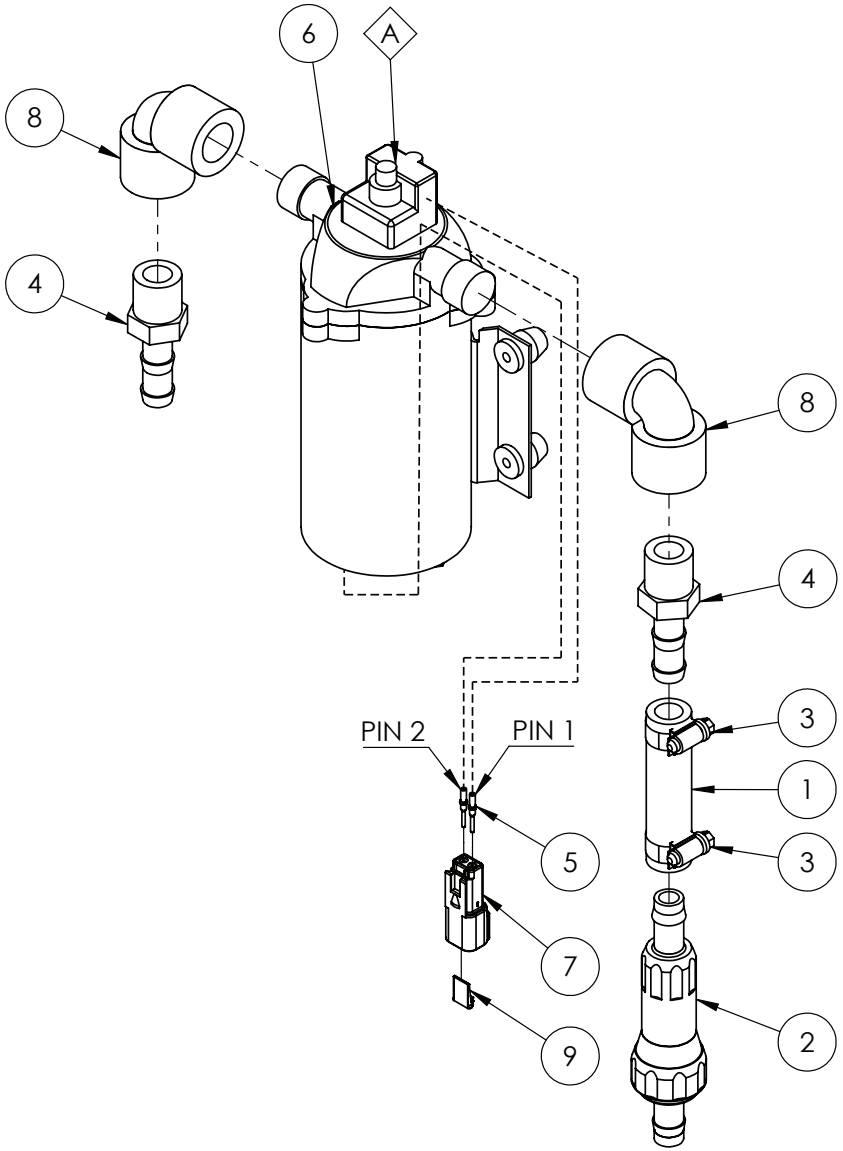

REPLACEMENT PARTS			
ITEM	PART NUMBER	DESCRIPTION	QTY
A	GA5071565	PRESSURE SWITCH, 45 PSI, SUIT 2088 SERIES SHURFLO 11.3LT PUMP	1

IF DESCRIPTION PREFIX IS ASSEMBLY DRAWING ONLY OR PRODUCTION DRAWING ONLY THE ITEM IS NOT FOR SALE			
ITEM	PART NUMBER	DESCRIPTION	QTY
1	GA2000286	12mm PRESSURE HOSE CUT 80mm, GA2000211	1
2	GA5008745	FILTER, INLINE, 1/2" HOSE BARBS	1
3	GA5000469	HOSE CLAMP, 1/2" SS 12-20/9W3	2
4	GA5077702	HOSE BARB, STRAIGHT, 1/2 MALE THREAD X 1/2 HOSE, BANJO, HB050	2
5	GA5061240	PIN, MALE, SOLID, NICKEL, NUMBER 16, GREEN BAND, AWG 14, DEUTSCH, 0460-215-16141	2
6	GA5023405	PUMP, 12 VOLT , 11.3LT/MIN MAX 45 PSI, SHURFLO	1
7	GA5052830	RECEPTACLE, 2 WAY, PINS, DT SERIES, DEUTSCH, DT04-2P	1
8	GA5077652	STREET ELBOW, 90 DEGREE, 1/2" FEMALE THREAD, BANJO	2
9	GA5052835	WEDGE LOCK, 2 WAY, DT SERIES, DEUTSCH	1
GA4949515 GOLDACRES		PUMP ASSEMBLY, WASH DOWN GUN, G6 MY20	REV 00

LH Pod, Cover

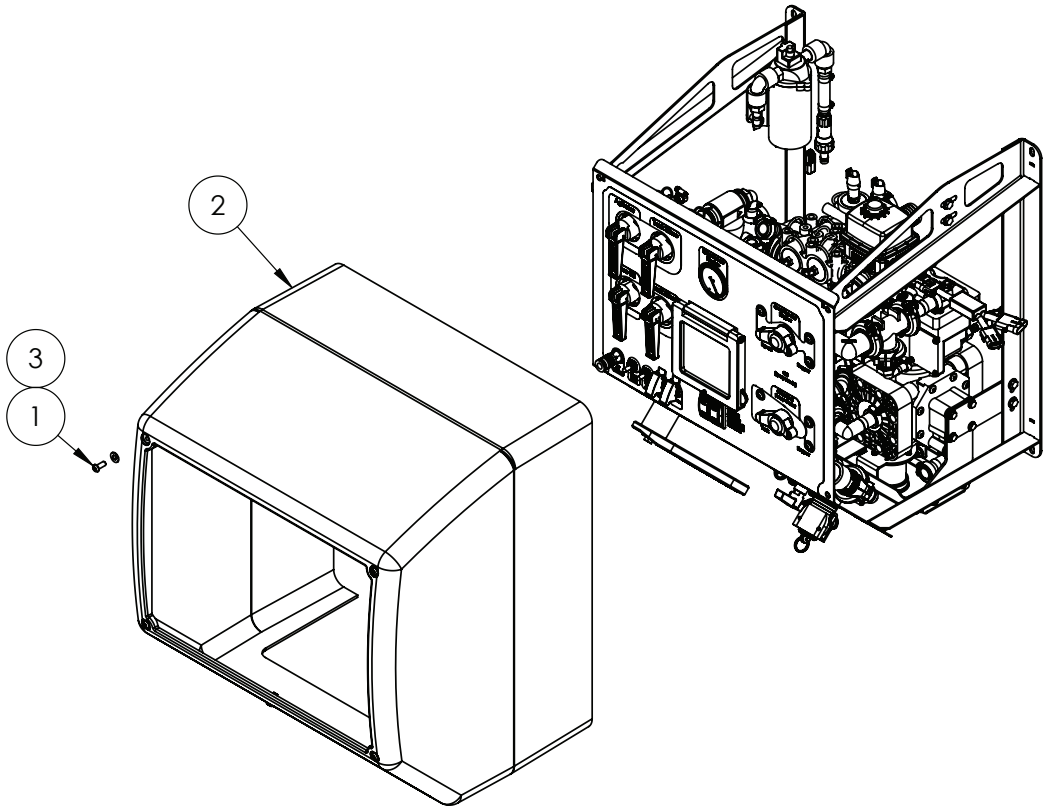

IF DESCRIPTION PREFIX IS ASSEMBLY DRAWING ONLY OR PRODUCTION DRAWING ONLY THE ITEM IS NOT FOR SALE			
ITEM	PART NUMBER	DESCRIPTION	QTY
1	GA0500102	BHCS M8 X 20 SS A2-70	5
2	GA5055781	POD COVER, MOULDED SHELL, POLY, G4 S2, MY24	1
3	GA5003643	WASHER 8mm FLAT SS HD	5
GA6101660-06 GOLDACRES		PLUMBING POD ASSEMBLY, G4 S2, MY24	REV 01

07 - Plumbing

Flow Meter Manifold Assembly, Raven 60P, High Pulse

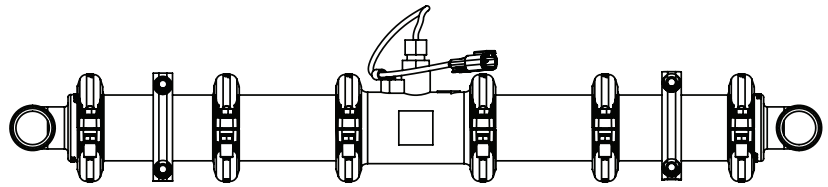

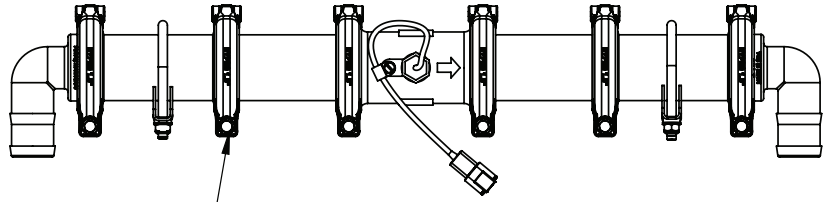

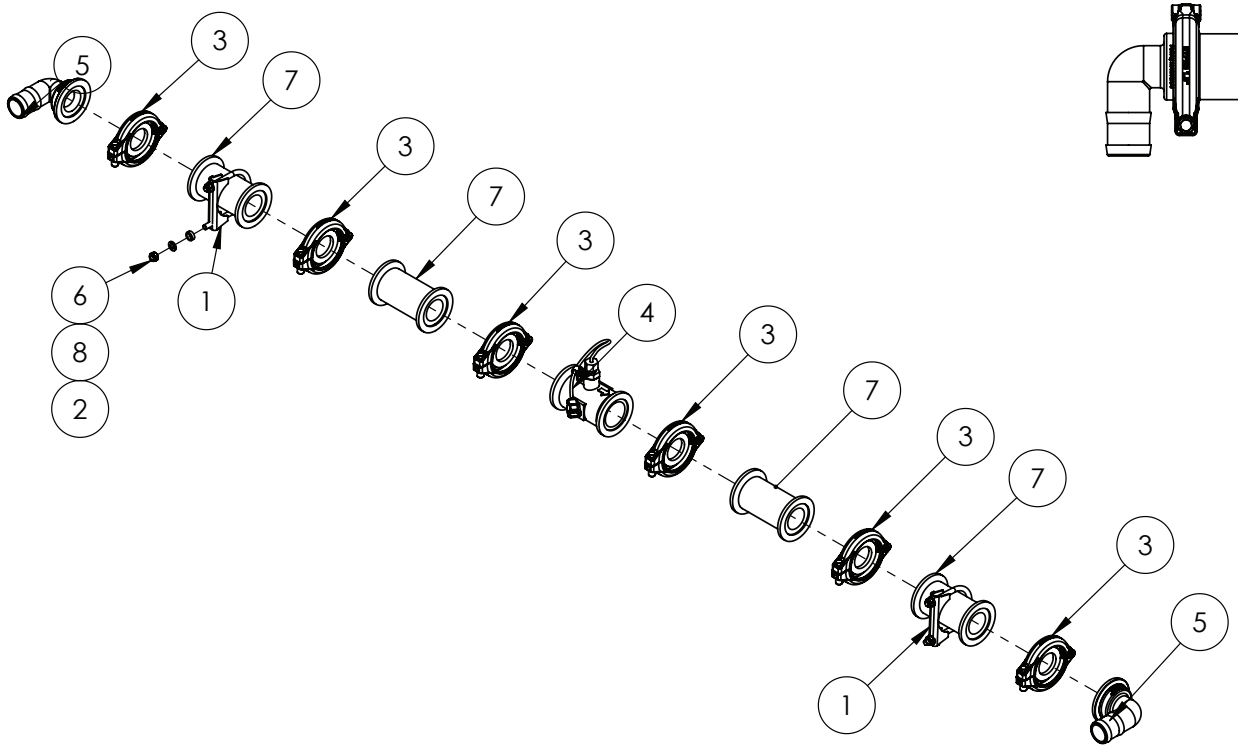

IF DESCRIPTION PREFIX IS ASSEMBLY DRAWING ONLY OR PRODUCTION DRAWING ONLY THE ITEM IS NOT FOR SALE			
ITEM	PART NUMBER	DESCRIPTION	QTY
1	GA5006689	CLAMP EXHAUST 2 5/8 (C12)	2
2	GA4552080	CRUSH TUBE, 10.2 ID X 15 OD X 5 mm LONG	4
3	GA2000114	FLANGE CLAMP, AND GASKET, 1.5", SERIES 200, HYPRO	6
4	GA3000265	FLOWMETER, RFM60P HIGH PULSE, DEUTSCH DTM, RAVEN, 0630172457	1
5	GA5077834	HOSE BARB, ELBOW, 90 DEGREE, 2" FLANGE X 1 1/2" HOSE, BANJO	2
6	GA5052590	NUT M8 NYLOC SS	4
7	GA5077840	PLUMBING COUPLING, STRAIGHT, 2" FLANGE X " FLANGE X 4 1/2" LONG, BANJO	4
8	GA5003643	WASHER 8mm FLAT SS HD	4
GA4949215 GOLDACRES		FLOW METER ASSEMBLY, LONG, RAVEN 60P HIGH PULSE WITH DEUTSCH CONNECTOR, 1 1/2" HOSE BARBS, SUIT RCM ISO BUS	REV 02

Flow Meter Assembly, Raven 60P, High Pulse

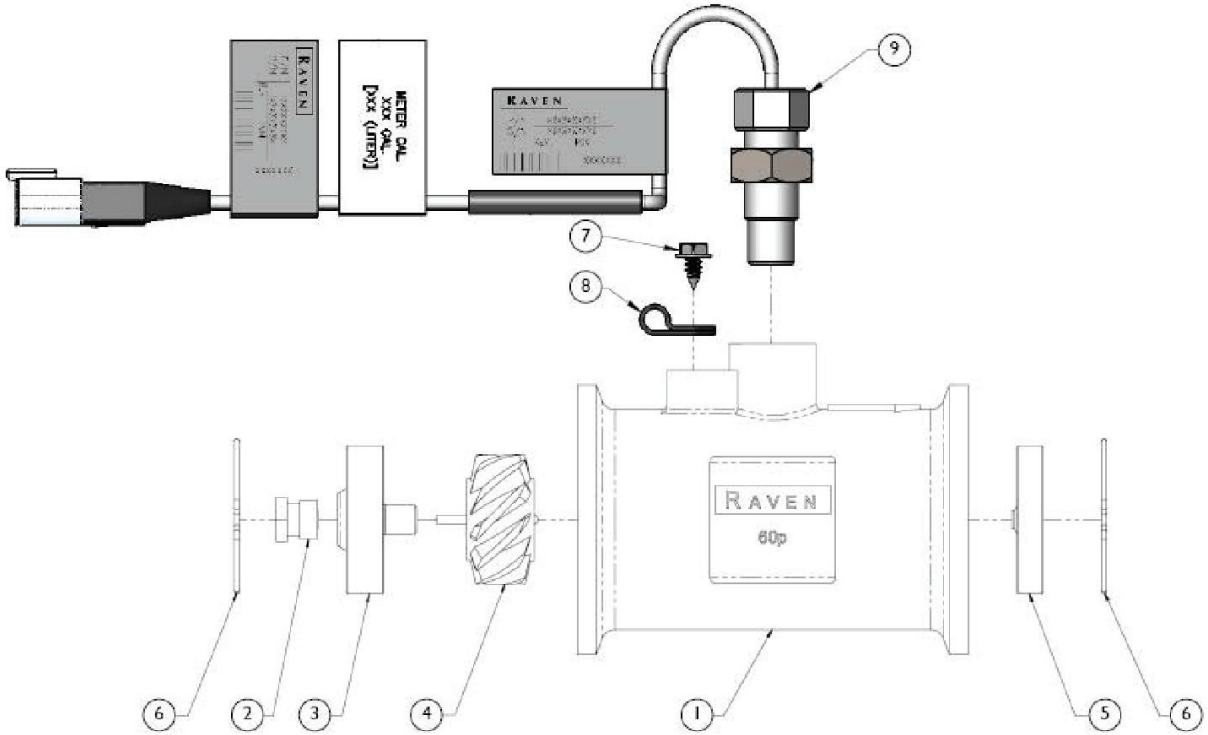

IF DESCRIPTION PREFIX IS ASSEMBLY DRAWING ONLY OR PRODUCTION DRAWING ONLY THE ITEM IS NOT FOR SALE			
ITEM	PART NUMBER	DESCRIPTION	QTY
1	GA5075890	FLOWMETER, RFM60P HIGH PULSE, RAVEN,	1
2	GA5026132	TURBINE, STUD, POLY, FLOWMETER, RFM-60	2
3	GA5075870	HUB/BEARING ASY UPSTREAM RFM60	1
4	GA5075869	ROTOR/MAGNET ASY RFM-60S	1
5	GA5075871	BEARING, DOWN STREAM END BEARING SUIT RFM60S FLOW METER, RAVEN, 0630171769	1
6	GA5026133	RETAINING RING, WIREFORM, FLOWMETER, RAVEN RFM-60	2
7	GA5076734	SCW 10-16 X 3/8 SLTD HEX	1
8	GA5076966	CLAMP CABLE PLASTIC 1/4X1/2	1
9	GA3000399	SENSOR, EXTERNAL FLOW METER, HIGH PULSE, SUIT 15P AND 60P, DEUTSCH CONNECTOR, RAVEN, 10630172458B	1
GA5075890 GOLDACRES		FLOW METER, RFM60P HIGH PULSE, RAVEN	REV 00

Chemical Suction Probe

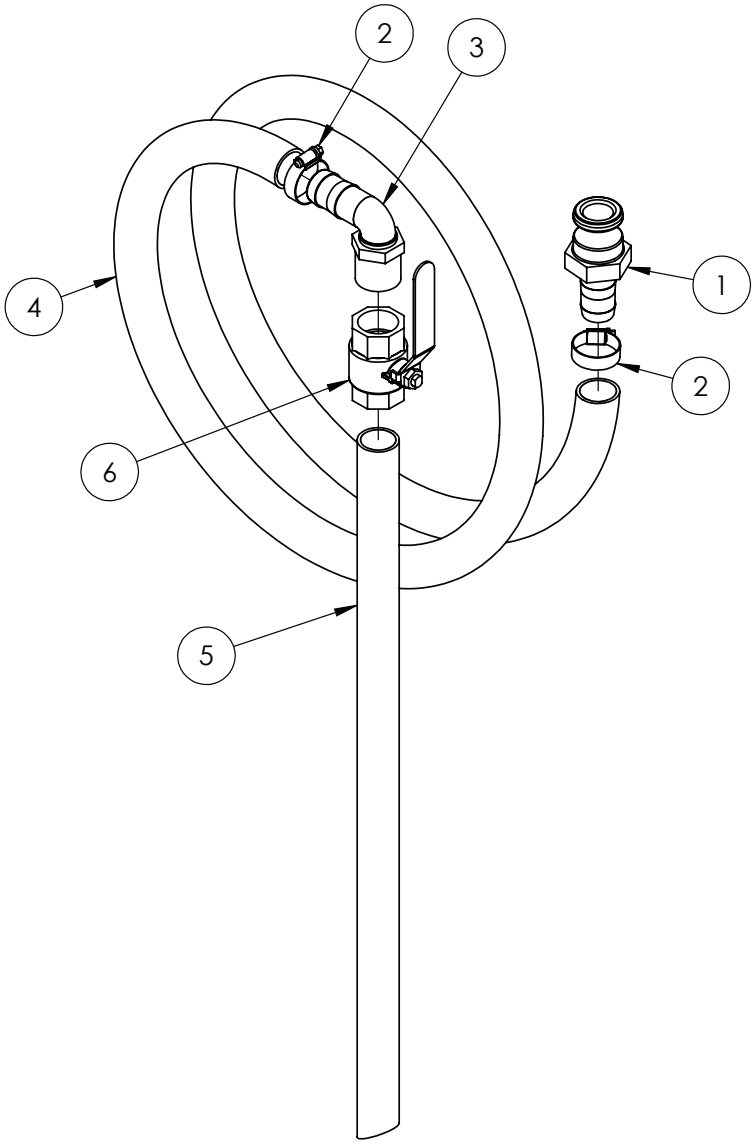

IF DESCRIPTION PREFIX IS ASSEMBLY DRAWING ONLY OR PRODUCTION DRAWING ONLY THE ITEM IS NOT FOR SALE			
ITEM	PART NUMBER	DESCRIPTION	QTY
1	GA5076011	CAM LEVER, 1 MALE COUPLING X 1 HOSE BARB, BANJO	1
2	GA5001681	HOSE CLAMP, 1" SS (20-32/12W)	2
3	GA5077723	HOSE BARB, ELBOW, 90 DEGREE, 1" MALE X 1" HOSE, BANJO	1
4	GA2000220	PVC HOSE 25mm CUT 3.2M	1
5	GA5013603	POLY PIPE 25mm CUT 630mm	1
6	GA5018319	VALVE, BALL, 25mm, 1" FEMALE, LEVER HANDLE, BRASS	1
GA4948250 GOLDACRES		PRE ASSEMBLED CHEMICAL DRUM PROBE	REV 01

Micromatic Probe, Hose Assembly

REPLACEMENT PARTS			
ITEM	PART NUMBER	DESCRIPTION	QTY
A	GA5018799	SEAL KIT, SUIT MICROMATIC / ENVIRO DRUM COUPLING	-

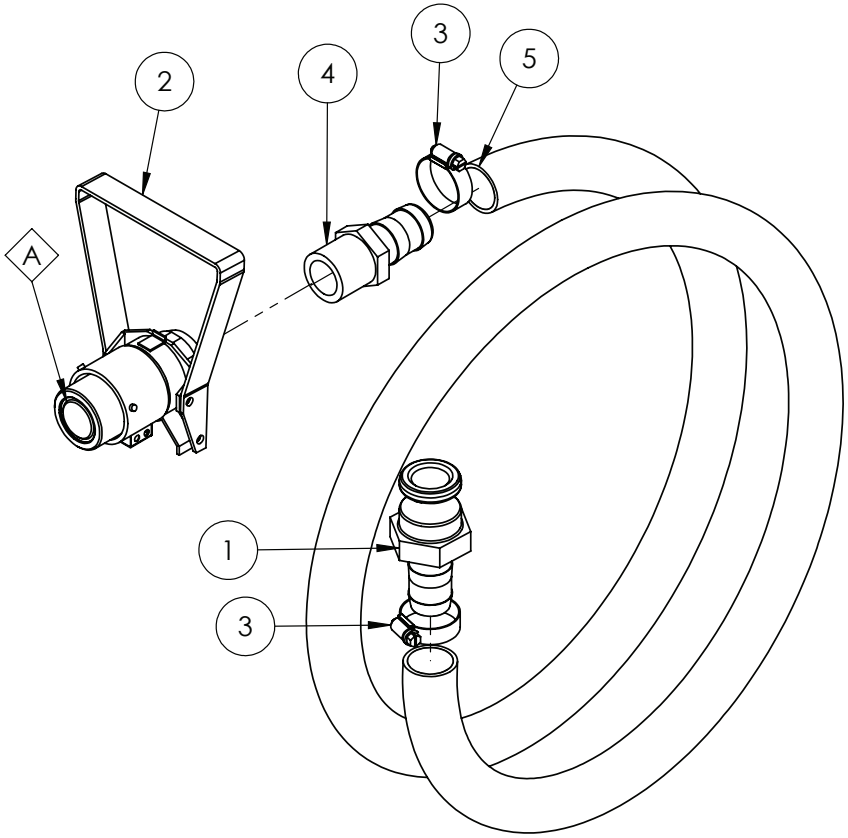

IF DESCRIPTION PREFIX IS ASSEMBLY DRAWING ONLY OR PRODUCTION DRAWING ONLY THE ITEM IS NOT FOR SALE			
ITEM	PART NUMBER	DESCRIPTION	QTY
1	GA5076011	CAM LEVER, 1 MALE COUPLING X 1 HOSE BARB, BANJO	1
2	GA5018803	COUPLER, 3 PIN, VITON FLOW CONTROL	1
3	GA5001681	HOSE CLAMP, 1" SS (20-32/12W)	2
4	GA5077718	HOSE BARB, STRAIGHT, 1 MALE THREAD X 1 HOSE, BANJO	1
5	GA2000220	PVC HOSE 25mm CUT 2840M	1
GA5020600 GOLDACRES		CHEMICAL SUCTION PROBE WITH ENVIRO	REV

Arag, 319 Series, Suction Filter

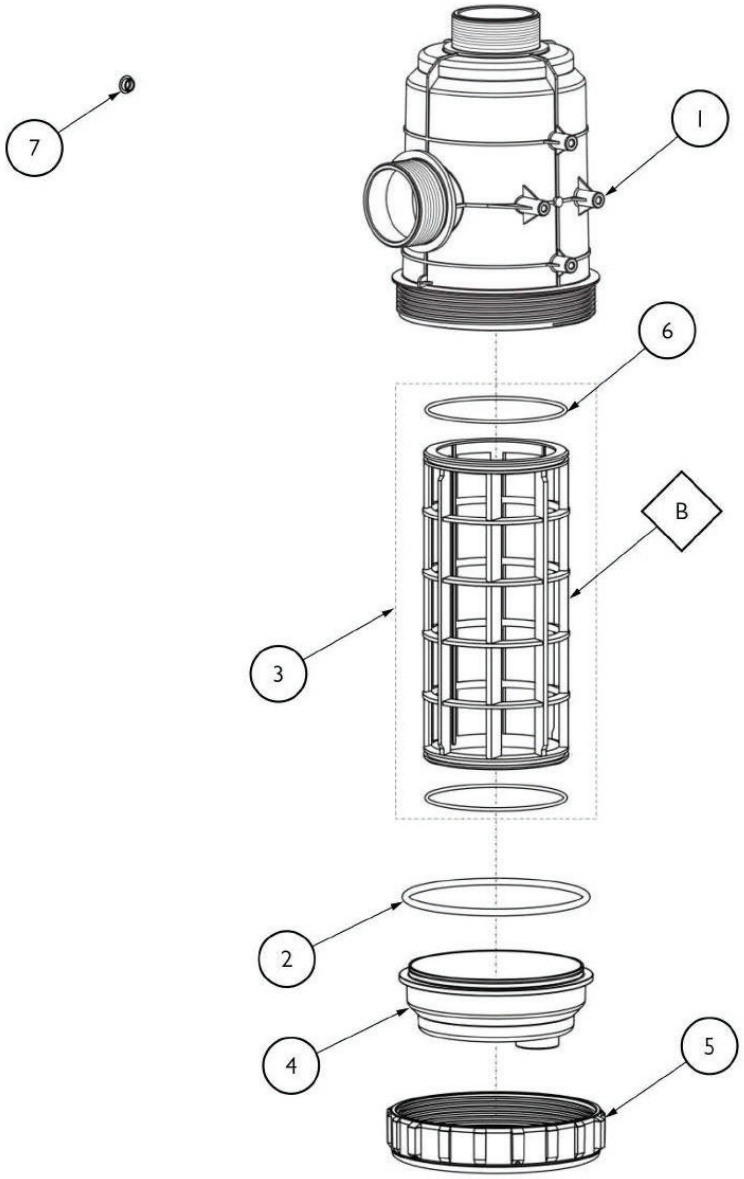

OPTIONAL PARTS			
ITEM	PART NUMBER	DESCRIPTION	QTY
A	GA4524994	SPANNER, ZINC COATED, 3" SUCTION FILTER, ARAG 319092 GA2000101	-
B	GA2000281	FILTER SCREEN, 145 X 320mm, 120 / 32 MESH, SUIT 319 3" FILTER, "GREY", ARAG	-

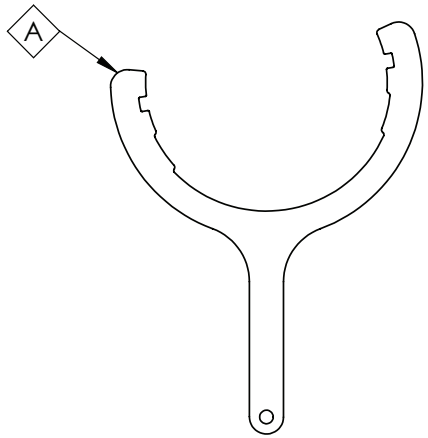

* ASSEMBLY DRAWING ONLY			
ITEM	PART NUMBER	DESCRIPTION	QTY
1	GA2000289	SUCTION FILTER BODY, SUIT ARAG 319, 319090.010	1
2	GA2000290	O RING, 6.99 X 174.6, EPDM, G11052, SUIT ARAG 319	1
	GA2000587	O-RING, 6.99 X 174.6, VITON, G11052V, SUIT ARAG GA2000101	1
3	GA2000561	FILTER SCREEN, 145 X 320mm, 32 MESH, SUIT 319 3" FILTER, "RED", ARAG	1
4	GA2000291	319 SUCTION FILTER BOWL, 319090.020	1
5	GA2000292	FLY NUT, SUCTION FILTER BODY, SUIT ARAG 319, 319090.040	1
6	GA5076863	O RING, 136.10 X 3.53, 335000.060	2
	GA5026296	O RING, 136.10 X 3.53, VITON, 335000.060V	2
7	GA2000293	LEVER PLUG, RED, SUIT ARAG 319, 4542233.055	1
GA2000101 GOLDACRES		SUCTION FILTER, 3" 32 MESH, 3" BSP MALE THREADS, VITON ORING, ARAG	REV 00.B

Arag, 330 Series, Pressure Filter

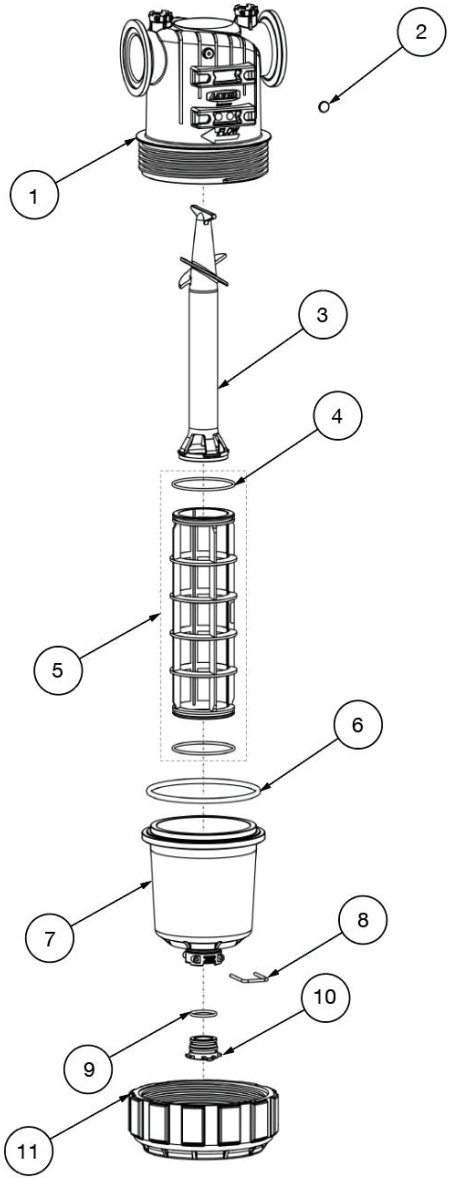

OPTIONAL PARTS			
ITEM	PART NUMBER	DESCRIPTION	QTY
A	GA4525000	SPANNER, ZINC COATED, 2" PRESSURE FILTER, ARAG 3303172V GA2000563	-

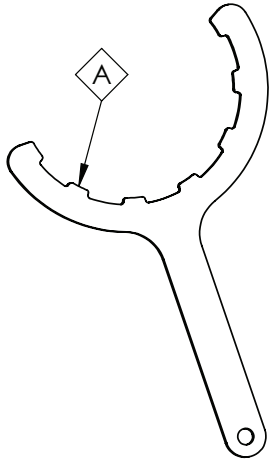

IF DESCRIPTION PREFIX IS ASSEMBLY DRAWING ONLY OR PRODUCTION DRAWING ONLY THE ITEM IS NOT FOR SALE			
ITEM	PART NUMBER	DESCRIPTION	QTY
1	GA2000246	BODY, SUIT PRESSURE FILTER GA2000563, ARAG, 3303070.010	1
2	GA5078771	YELLOW CAP, ARAG, PRESSURE FILTER, 80MM, 31020035.012	1
3	GA2000247	SELF-CLEANING CYLINDER, SUIT PRESSURE FILTER GA2000563, ARAG, 330000.050	1
4	GA2000248	O-RING, FILTER ELEMENT, SUIT PRESSURE FILTER GA2000563, ARAG, 462200.040V	1
5	GA2000347	FILTER ELEMENT, SUIT GA2000563 PRESSURE FILTER, YELLOW, 80 MESH, VITON O RINGS, ARAG	1
6	GA2000249	O-RING, BOWL, SUIT PRESSURE FILTER GA2000563, ARAG, G11100V	1
7	GA2000250	BOWL, SUIT PRESSURE FILTER GA2000563, ARAG, 3300100.020	1
8	GA2000252	FORK D.3, DIST.29, SUIT PRESSURE FILTER GA2000563, ARAG, 010003	1
9	GA2000251	O-RING, BLANK CAP, SUIT PRESSURE FILTER GA2000563, ARAG, G11058V	1
10	GA2000342	PRESSURE FILTER BOWL CAP, ARAG 330, 219130	1
11	GA2000253	LOCK RING, SUIT PRESSURE FILTER GA2000563, ARAG, 330000.040	1
GA2000563 GOLDACRES		PRESSURE FILTER, 2", 80 MESH, ARAG SERIES 330	REV 00

Fenceline Nozzle Body Assembly, LH, Manual Operated, 1”

LEFT HAND SIDE

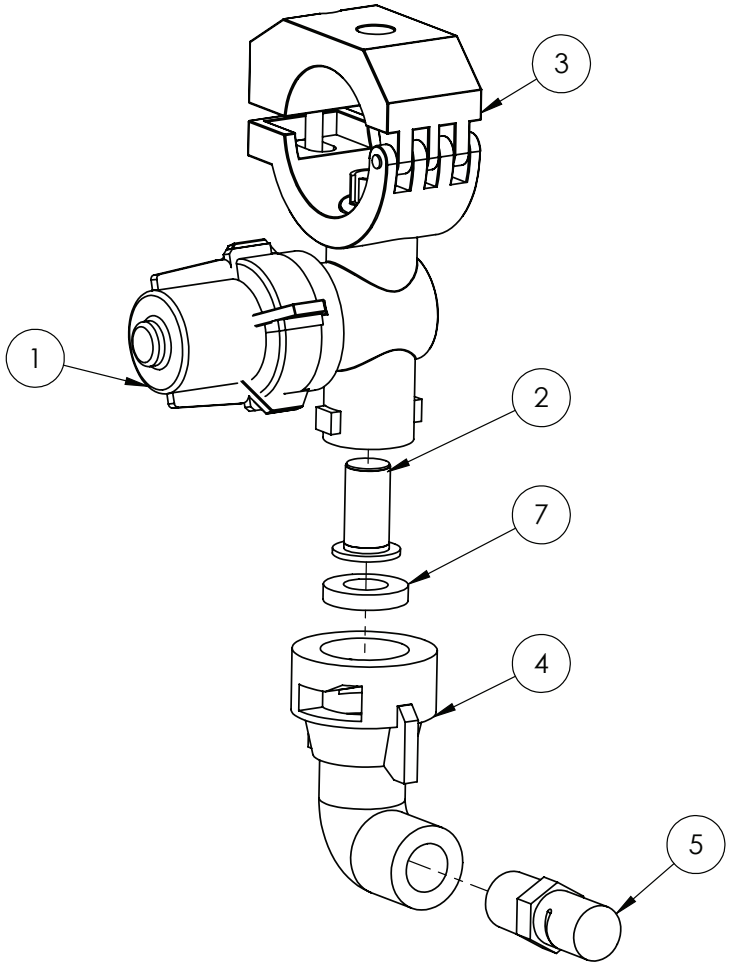

IF DESCRIPTION PREFIX IS ASSEMBLY DRAWING ONLY OR PRODUCTION DRAWING ONLY THE ITEM IS NOT FOR SALE			
ITEM	PART NUMBER	DESCRIPTION	QTY
1	GA5077074	CHEMSAVER, MANUAL SHUTOFF, MAXIMUM 150PSI PRESSURE, TEEJET, 58140-NYB	1
2	GA5077159	FILTER, NOZZLE TIP, 50 MESH, POLYPROPYLENE, SS, TEEJET, 8079-PP-50	1
3	GA5077962	NOZZLE BODY, SINGLE, 1", TEEJET, QJ17560A-1-NYB	1
4	GA5077986	NOZZLE CAP & WASHER, 90 DEGREE CAP, 1/4" NPT FEMALE OUTLET, TEEJET, QJ4676-90-1/4-NYR	1
5	GA8100339	NOZZLE, FENCE LINE, ORANGE, POLYMER, LEFT SIDE, 1/4" NPT, TEEJET, 1/4XP10L	1
7	GA5055245	SEAT WASHER, RUBBER SUIT TEE JET NOZZLE	1
GA4953565 GOLDACRES		ASSEMBLY DRAWING ONLY, FENCE LINE NOZZLE ASSEMBLY, MANUAL	REV 00

Fenceline Nozzle Body Assembly, RH, Manual Operated, 1”

RIGHT HAND SIDE

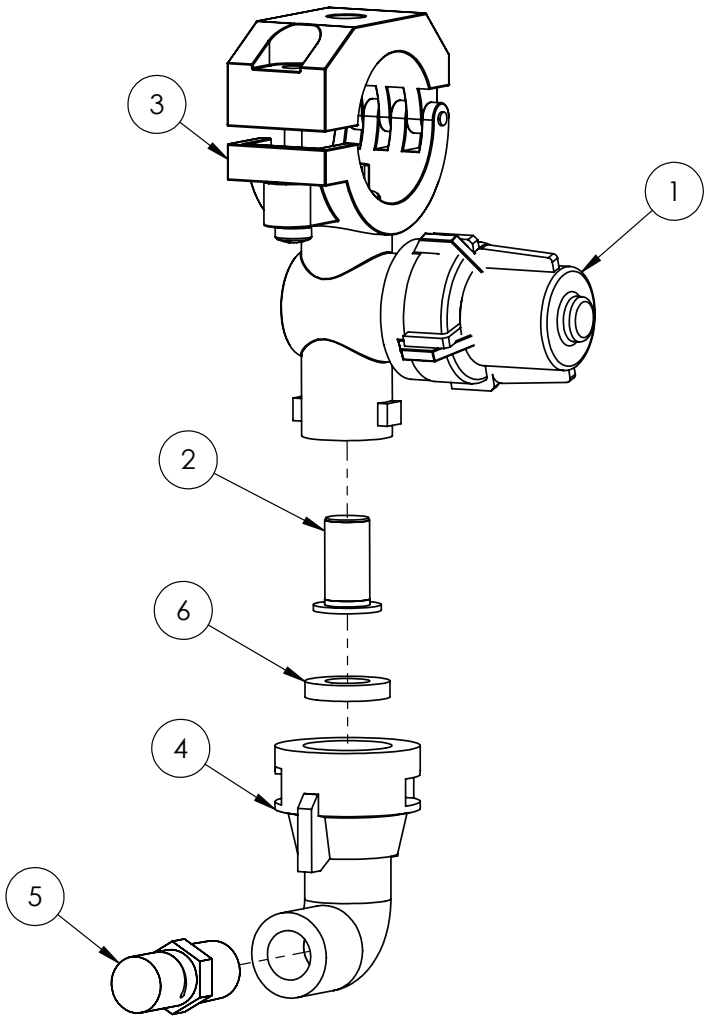

IF DESCRIPTION PREFIX IS ASSEMBLY DRAWING ONLY OR PRODUCTION DRAWING ONLY THE ITEM IS NOT FOR SALE			
ITEM	PART NUMBER	DESCRIPTION	QTY
1	GA5077074	CHEMSAVER, MANUAL SHUTOFF, MAXIMUM 150PSI PRESSURE, TEEJET, 58140-NYB	1
2	GA5077159	FILTER, NOZZLE TIP, 50 MESH, POLYPROPYLENE, SS, TEEJET, 8079-PP-50	1
3	GA5077962	NOZZLE BODY, SINGLE, 1", TEEJET, QJ17560A-1-NYB	1
4	GA5077986	NOZZLE CAP & WASHER, 90 DEGREE CAP, 1/4" NPT FEMALE OUTLET, TEEJET, QJ4676-90-1/4-NYR	1
5	GA8100340	NOZZLE, FENCE LINE, ORANGE, POLYMER, RIGHT SIDE, 1/4" NPT, TEEJET, 1/4XP10R	1
6	GA5055245	SEAT WASHER, RUBBER SUIT TEE JET NOZZLE	1
GA4953565 GOLDACRES		ASSEMBLY DRAWING ONLY, FENCE LINE NOZZLE ASSEMBLY, MANUAL	REV 00

Fenceline Nozzle Body Assembly, LH, Solenoid Operated, 1”

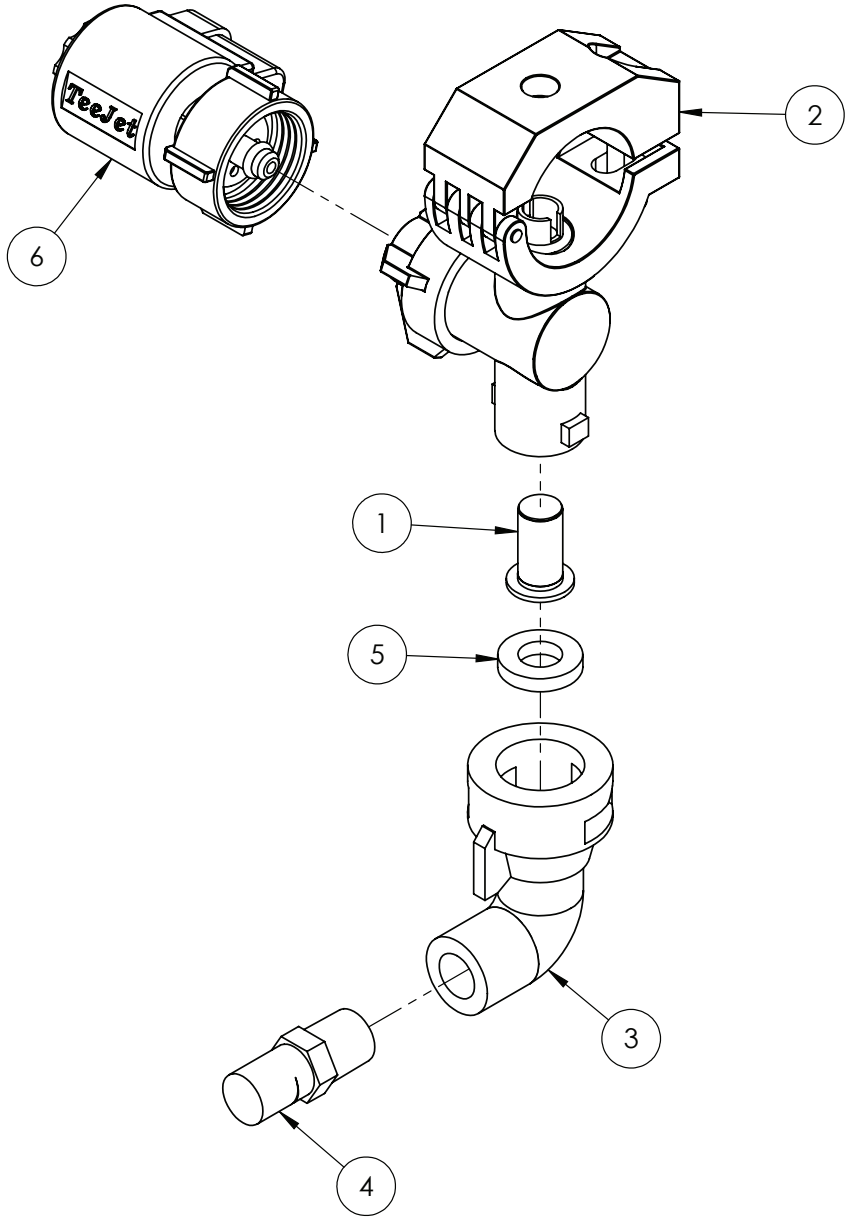

IF DESCRIPTION PREFIX IS ASSEMBLY DRAWING ONLY OR PRODUCTION DRAWING ONLY THE ITEM IS NOT FOR SALE			
ITEM	PART NUMBER	DESCRIPTION	QTY
1	GA5077159	FILTER, NOZZLE TIP, RED, 50 MESH, POLYPROPYLENE & SS, TEEJET, 8079-PP-50	1
2	GA5077962	NOZZLE BODY, SINGLE, 1", TEEJET, QJ17560A-1-NYB	1
3	GA5077986	NOZZLE CAP & WASHER, 90 DEGREE CAP, 1/4" NPT FEMALE OUTLET, TEEJET, QJ4676-90-1/4-NYR	1
4	GA8100339	NOZZLE, FENCE LINE, ORANGE, POLYMER, LEFT SIDE, 1/4" NPT, TEEJET, 1/4XP10L	1
5	GA5055245	SEAT WASHER, RUBBER SUIT TEE JET NOZZLE	1
6	GA5071785	SOLENOID, E-CHEMSAVER SUIT 2 PIN METRI-PACK, FENCE LINE	1
GA4950015 GOLDACRES		ASSEMBLY DRAWING ONLY, FENCE LINE JET ASSEMBLY, LH, 1", TRITECH S	REV 00

Fenceline Nozzle Body Assembly, RH, Solenoid Operated, 1”

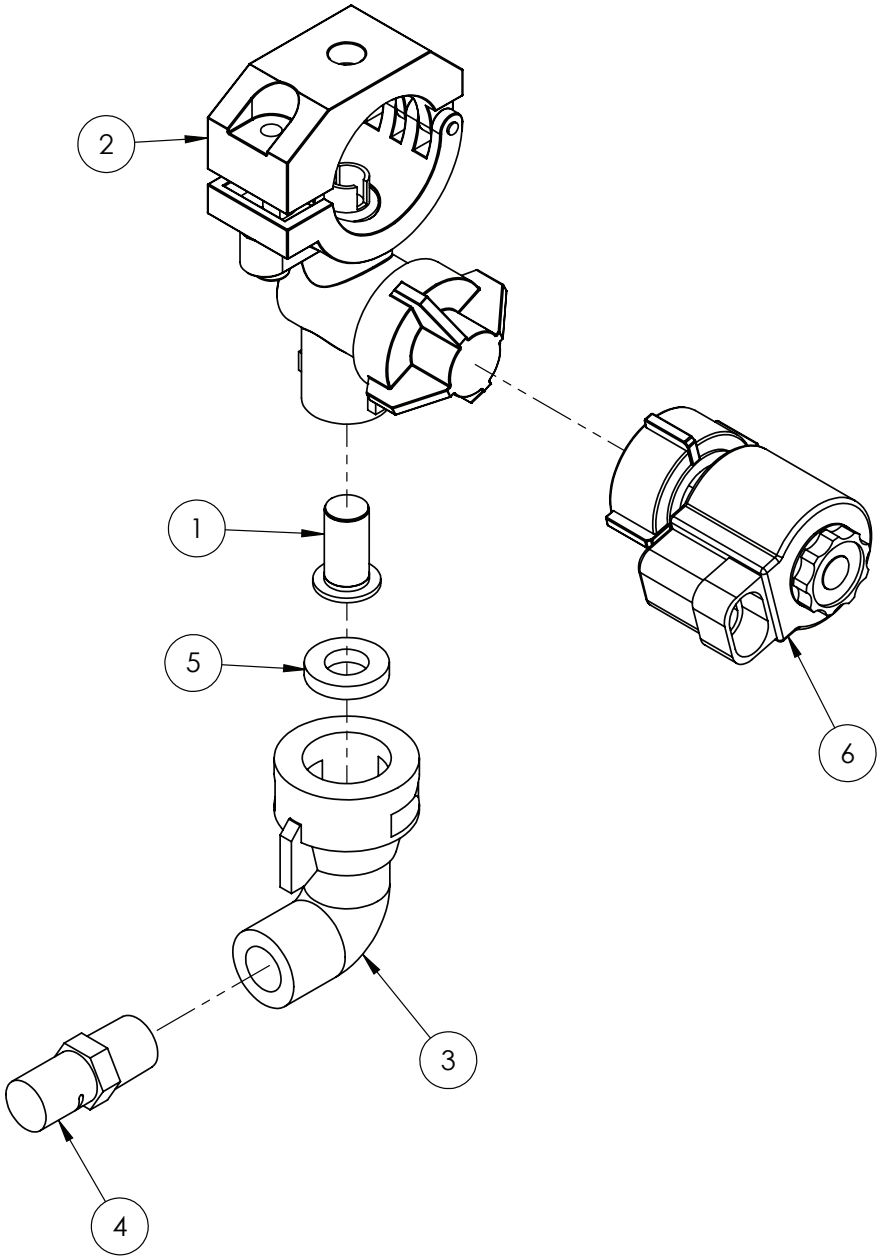

IF DESCRIPTION PREFIX IS ASSEMBLY DRAWING ONLY OR PRODUCTION DRAWING ONLY THE ITEM IS NOT FOR SALE			
ITEM	PART NUMBER	DESCRIPTION	QTY
1	GA5077159	FILTER, NOZZLE TIP, RED, 50 MESH, POLYPROPYLENE & SS, TEEJET, 8079-PP-50	1
2	GA5077962	NOZZLE BODY, SINGLE, 1", TEEJET, QJ17560A-1-NYB	1
3	GA5077986	NOZZLE CAP & WASHER, 90 DEGREE CAP, 1/4" NPT FEMALE OUTLET, TEEJET, QJ4676-90-1/4-NYR	1
4	GA8100340	NOZZLE, FENCE LINE, ORANGE, POLYMER, RIGHT SIDE, 1/4" NPT, TEEJET, 1/4XP10R	1
5	GA5055245	SEAT WASHER, RUBBER SUIT TEE JET NOZZLE	1
6	GA5071785	SOLENOID, E-CHEMSAVER SUIT 2 PIN METRI-PACK, FENCE LINE	1
GA4950020 GOLDACRES		ASSEMBLY DRAWING ONLY, FENCE LINE JET ASSEMBLY, RH, 1", TRITECH S	REV 00

Nozzle Body, 1”, Teejet Single Body

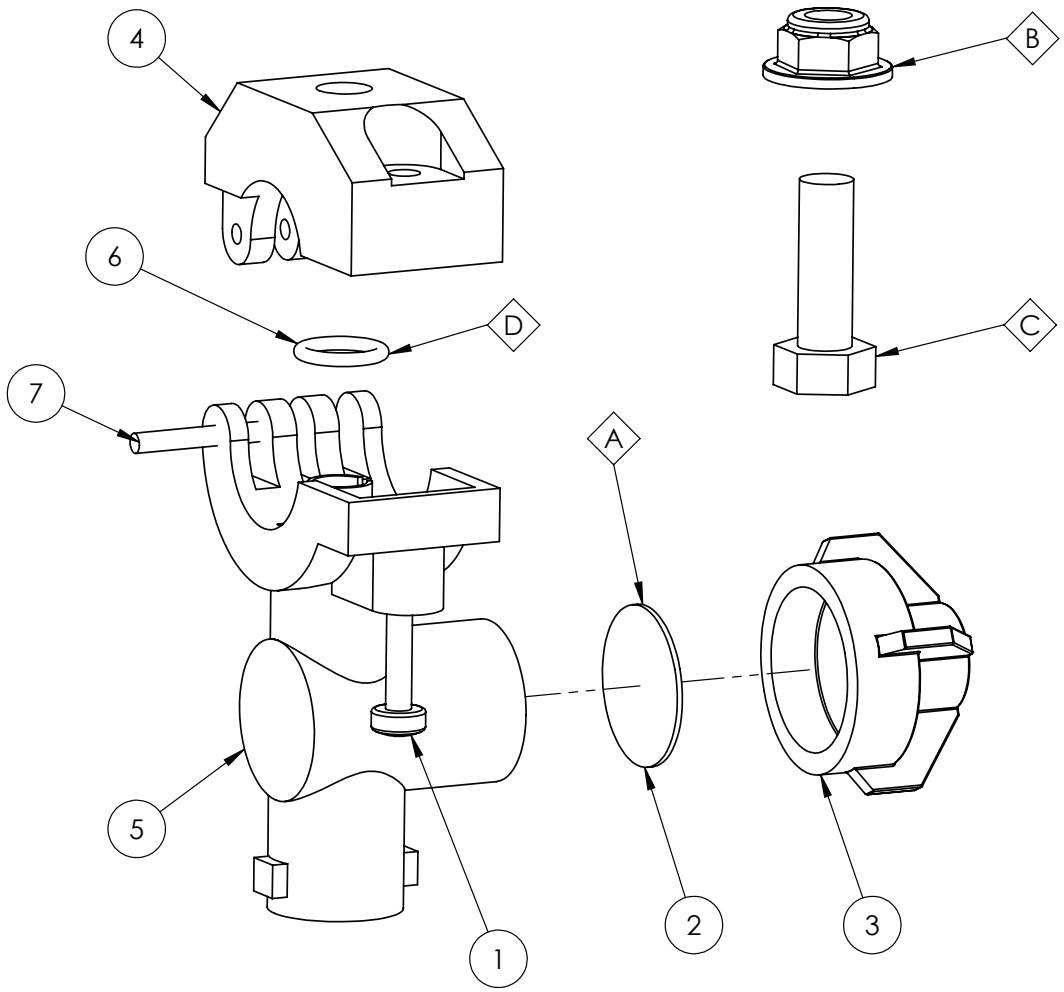

REPLACEMENT PARTS			
ITEM	PART NUMBER	DESCRIPTION	QTY
A	GA5077440	DIAPHRAGM, VITON, NOZZLE BODY CHECK VALVE, TEEJET	-
B	GA5070710	NUT FLANGE PLASTIC M8 X 1.25	1
C	GA5052595	BOLT M8 X 20 SS A270	1
D	GA5077596	O RING, 14.5 X 2.5, BUNA, CP7717-2/110-BU, SUITS QJ7421 SERIES NOZZLE BODIES.	1

IF DESCRIPTION PREFIX IS ASSEMBLY DRAWING ONLY OR PRODUCTION DRAWING ONLY THE ITEM IS NOT FOR SALE			
ITEM	PART NUMBER	DESCRIPTION	QTY
1	GA5049020	BOLT PAN HEAD M4 X 25 SS	1
2	GA5077439	CHEMSAVER, DIAPHRAGM, CP21953-EPR, TEEJET	1
3	GA5076670	CHEMSAVER, 10PSI, BLACK, TEEJET, 21950-10-NYB	1
4	GA5077533	NOZZLE BODY CLAMP, UPPER, 1, TEEJET, CP48222-NYB	1
5	GA5077962	NOZZLE BODY, SINGLE, 1, TEEJET, QJ17560A-1-NYB	1
6	GA5077596	O RING, 14.5 X 2.5, BUNA, CP7717-2/110-BU, SUITS QJ7421 SERIES NOZZLE BODIES.	1
7	GA5077537	PIN, NOZZLE BODY CLAMP, TEEJET, CP48256-SS	1
GA5077962 GOLDACRES		NOZZLE BODY, SINGLE, 1, TEEJET, QJ17560A-1-NYB	REV 00

Nozzle Body Assembly - Teejet Clock Face Body

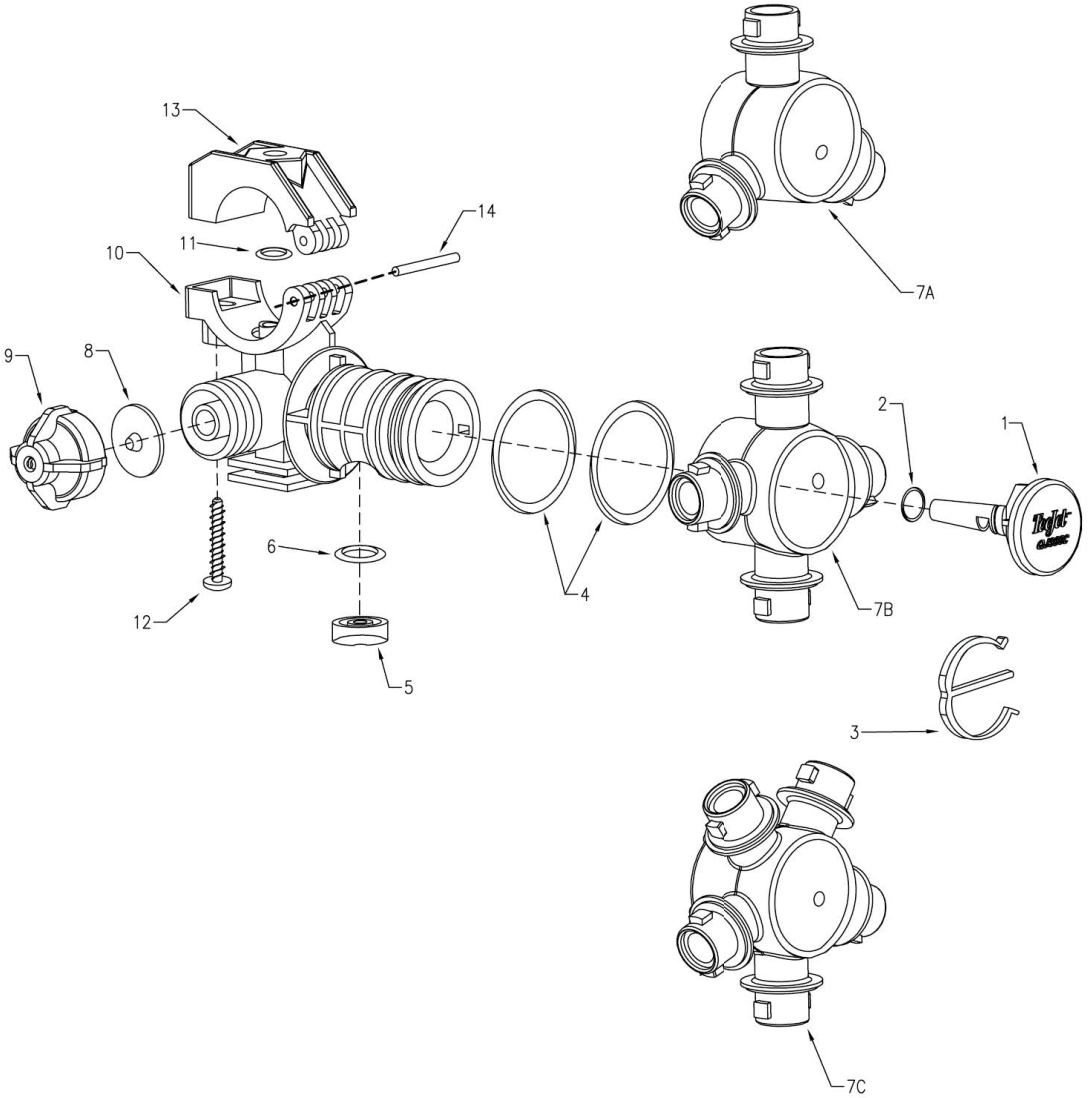

IF DESCRIPTION PREFIX IS ASSEMBLY DRAWING ONLY OR PRODUCTION DRAWING ONLY THE ITEM IS NOT FOR SALE			
ITEM	PART NUMBER	DESCRIPTION	QTY
1	GA5074440	PLUG, NYLON, TEEJET, SUIT, CLOCKFACE, CP38930-8-NYB	1
2	GA5074435	O-RING, TEEJET, CLOCKFACE, EPDM, CP7717-2-13-EPR	1
-	GA5074455	O-RING, TEEJET, CLOCKFACE, VITON, CP7717-2-13-VI	-
3	GA5077496	E CLIP, NOZZLE BODY, TEEJET, CP38931-NYB	1
4	GA5077609	O'RING, CP7717-M28X3-EPRTFE	2
-	GA5077609	O'RING, CP7717-M28X3-EPRTFE	-
5	GA5077557	QJ360 SEAL F/CF&E, CP56726-VITFE	1
6	GA5077605	O RING VITON, CP7717-2-111-VI	1
7A	GA5077491	NOZZLE BODY TURRET, 3 OUTLET CLOCK FACE STYLE, TEEJET, CP38921-2-NYB	1
7B	GA5074445	NOZZLE BODY TURRET, 4 OUTLET CLOCK FACE STYLE TEEJET, CP38922-2-NYB	-
7C	GA5074450	NOZZLE BODY TURRET, 5 OUTLET CLOCK FACE STYLE, CP38923-2-NYB	-
8	GA5077439	CHEMSAVER, DIAPHRAGM, CP21953-EPR, TEEJET	1
-	GA5077440	DIAPHRAGM, VITON, NOZZLE BODY CHECK VALVE, TEEJET	-
9	GA5076670	CHEMSAVER, 10PSI, BLACK, TEEJET, 21950-10-NYB	1
10	GA5077501	1/2 BODY FOR 360C, CP38942-2-NYB	1
-	GA5077493	3/4 360C BODY NYLON, CP38925-2-NYB	-
-	GA5077494	BODY, 360 SERIES 1", TEEJET, CP38926-2-NYB	-
11	GA5077605	O RING VITON, CP7717-2-111-VI	1
12	GA5077536	SCREW, SUIT TEEJET NOZZLE BODIES QJ360 AND QJ17560, 1-1/4 LONG, SS, CP48255-11/4-302SS	1
13	GA5077534	1/2 UPPER CLAMP, CP48223-NYB	1
-	GA5077532	CLAMP, NOZZLE BODY, 3/4, TEEJET, CP48221-NYB	-
-	GA5077533	NOZZLE BODY CLAMP, UPPER, 1, TEEJET, CP48222-NYB	-
-	GA5077535	25MM UPPER CLAMP, CP48224-NYB	-
14	GA5077537	PIN, NOZZLE BODY CLAMP, TEEJET, CP48256-SS	1
GA5077970 GOLDACRES		NOZZLE BODY, TRIPLE, TRIJET, CLOCK FACE, 1", TEEJET, QJ363C-1-NYB	REV 00

Nozzle Body Assembly, Altek Dual Spray Body

REPLACEMENT PARTS			
ITEM	PART NUMBER	DESCRIPTION	QTY
-	GA8100664	NOZZLE BODY, TWIN / DUAL, AIR SHUT OFF, 1", SLAVE, ALTEK 82063	-

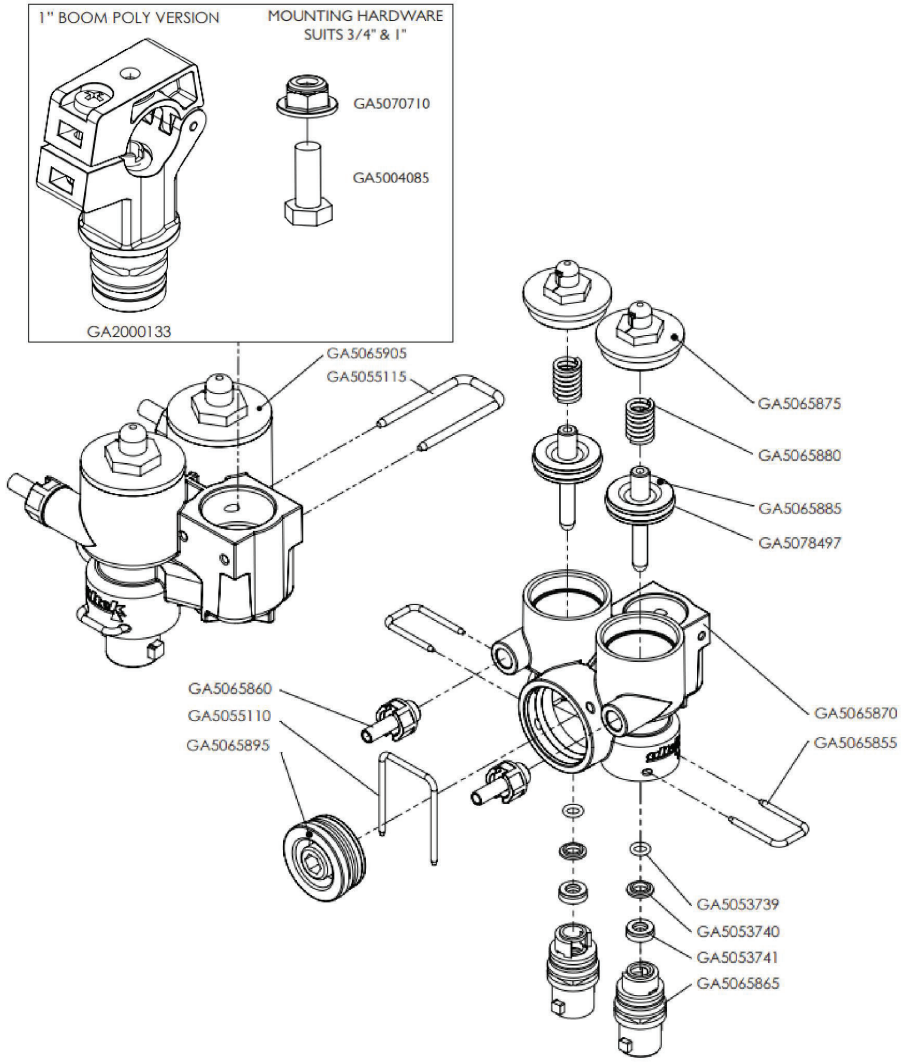

ASSEMBLY DRAWING ONLY ASSEMBLY ON FOLLOWING PAGES			
ITEM	PART NUMBER	DESCRIPTION	QTY
-	GA5070710	NUT FLANGE PLASTIC M8 X 1.25	1
-	GA5004085	BOLT M8 X 20 GR8.8 ZP	1
-	GA2000133	CLAMP, DUAL NOZZLE BODY, SUIT 1" BOOM POLY, INCLUDES SCREW, NUT AND O RING, ALTEK	1
-	GA5065905	LOWER BODY, MULTI SPRAY, ALTEK	1
-	GA5055115	U CLIP, 20 X 40 X 3 mm, 82297, SUIT ALTEK NOZZLE BODY GA5065845	1
-	GA5065875	TOP CAP, 82538, SUIT ALTEK NOZZLE BODY	2
-	GA5065880	SPRING, 47902, SUIT ALTEK NOZZLE BODY	2
-	GA5065885	PLUNGER, 82537, SUIT ALTEK NOZZLE BODY	2
-	GA5078497	O RING, 23.5 X 2.6 mm, FPM80	-
-	GA5065870	OUTER BODY HOUSING, 82418, SUIT ALTEK TWIN NOZZLE BODY	1
-	GA5065855	U-CLIP, 21931, SUIT ALTEK NOZZLE BODY	2
-	GA5065865	OUTLET, VALVE INNER, NOZZLE BODY, ALTEK, 82532	2
-	GA5065860	HOSE BARB, AIR FITTING, 6mm HOSE X MALE THREAD, 82572, SUIT ALTEK NOZZLE BODY, INCLUDES SEAL	2
-	GA5055110	U CLIP 30 X 41 X 2.5 mm, 82298, TO SUIT GA5065845	1
-	GA5065895	SHUTOFF PLUG SUIT ALTEK NOZZLE BODY, 82539	1
-	GA5053739	O RING, 5.6 X 1.8 FPM, SUIT GA5065845, ALTEK	2
-	GA5053740	RETAINING DISK, 11.8 X 6.8 X 2, SUIT GA5065845, ALTEK	2
-	GA5053741	LIP SEAL, 6 X 12 X 4.2 FPM, SUIT GA5065845, ALTEK	4
GA8100664 GOLDACRES		NOZZLE BODY, TWIN / DUAL, AIR SHUT OFF, 1", SLAVE, ALTEK 82063	REV 00

Altek Spray Stop Assembly, 4mm

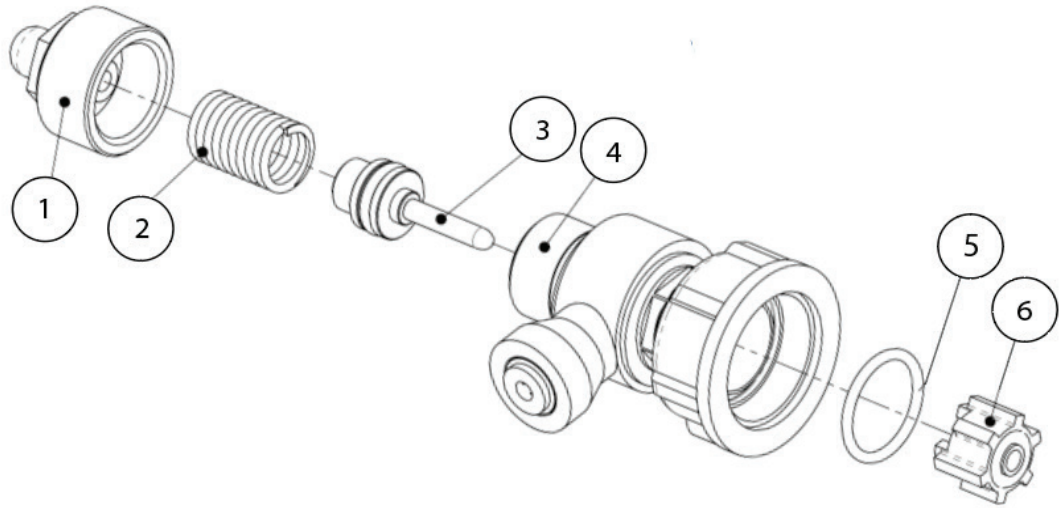

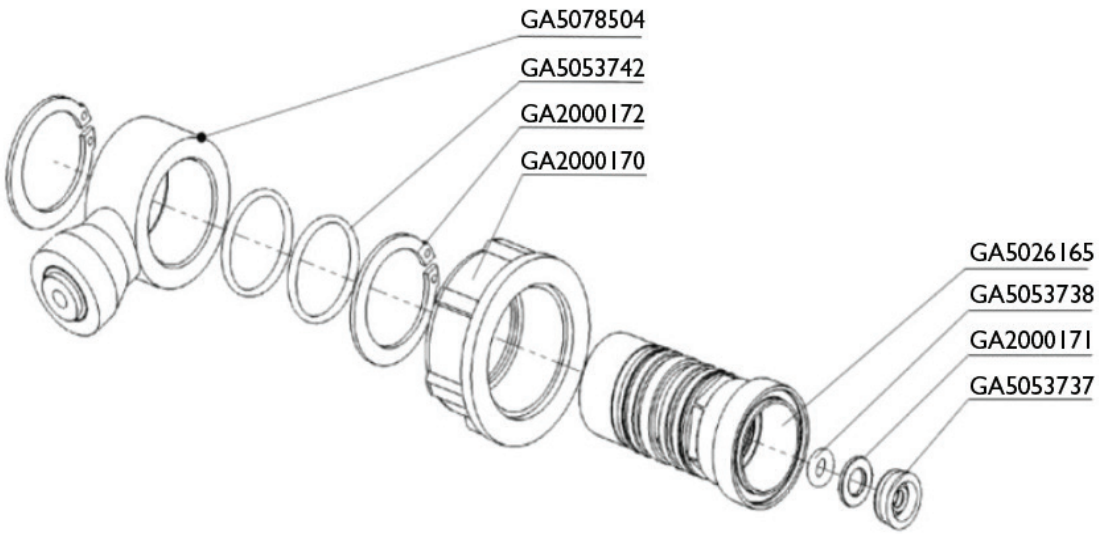

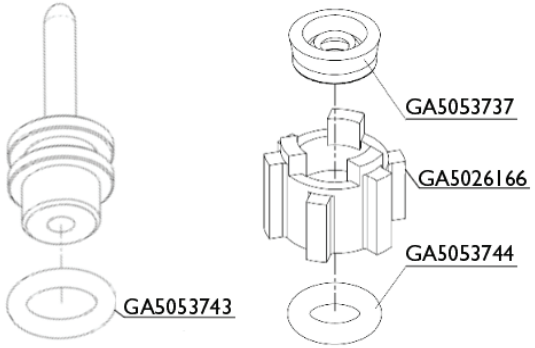

IF DESCRIPTION PREFIX IS ASSEMBLY DRAWING ONLY OR PRODUCTION DRAWING ONLY THE ITEM IS NOT FOR SALE			
ITEM	PART NUMBER	DESCRIPTION	QTY
1	GA5053731	END CAP WITH BREATHER, SUIT GA5065520 SPRAY STOP, ALTEK	1
2	GA5053732	SPRING, 10 BAR, SUIT GA5065520 GA5065525, SPRAY STOP, ALTEK	1
3	GA5053733	PISTON, SUIT GA5065520 SPRAY STOP, ALTEK	1
4	GA2000167	SPRAY STOP BODY, PUSH IN TYPE, ALTEK, 83051	1
5	GA5053735	ORING EXTERNAL, SUIT GA5065520 SPRAY STOP, ALTEK	1
6	GA5053736	PLUNGER, SUIT GA5065520 GA5065523 GA5065525 SPRAY STOP, ALTEK	1
-	GA5078504	CONNECTOR RING, SPRAY STOP, 4mm VERSION, ALTEK, 83773, 85250	1
-	GA5053742	O RING, 16 X 1.5, SUIT GA5065520 SPRAY STOP, ALTEK	1
-	GA2000172	CIRCLIP, SPRAY STOP, ALTEK, 81376	1
-	GA2000170	FLY NUT, SPRAY STOP, ALTEK, 80924	1
-	GA5026165	BODY, AIRFEED, ALTEK, 81373	1
-	GA5053738	O RING, 3.68 X 1.78 FPM 75, SUIT GA5065520 SPRAY STOP, ALTEK	1
-	GA2000171	RIVET SLICE, SPRAY STOP, ALTEK, 41162	1
-	GA5053737	NUT RING, 4 X 10 X 4.2 FPM SUIT GA5065520 SPRAY STOP, ALTEK	1
-	GA5053743	O RING, 9 X 2.5, SUIT GA5065520 SPRAY STOP, ALTEK	1
-	GA5026166	NUT, PLUNGER, NUT ONLY, ALTEK, 80926	1
-	GA5053744	O RING, 6.02 X 2.62, SUIT GA5065520 SPRAY STOP, ALTEK	1
GA5065523 GOLDACRES		SPRAY STOP, 4mm, RAPIDFIRE, SUIT TEEJET NOZZLE BODY, ALTEK	REV 00

Altek Spray Stop Assembly, 6mm

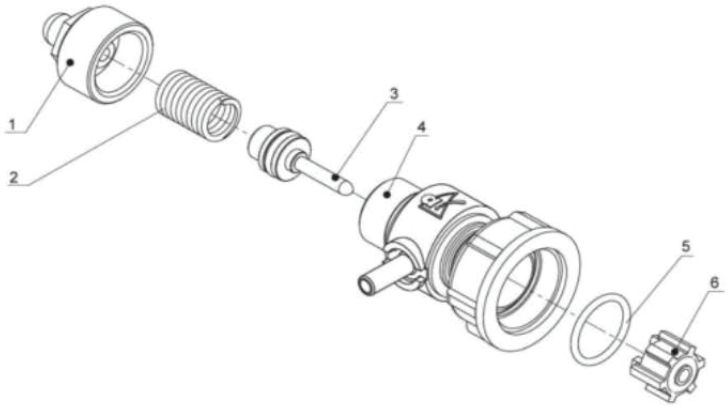

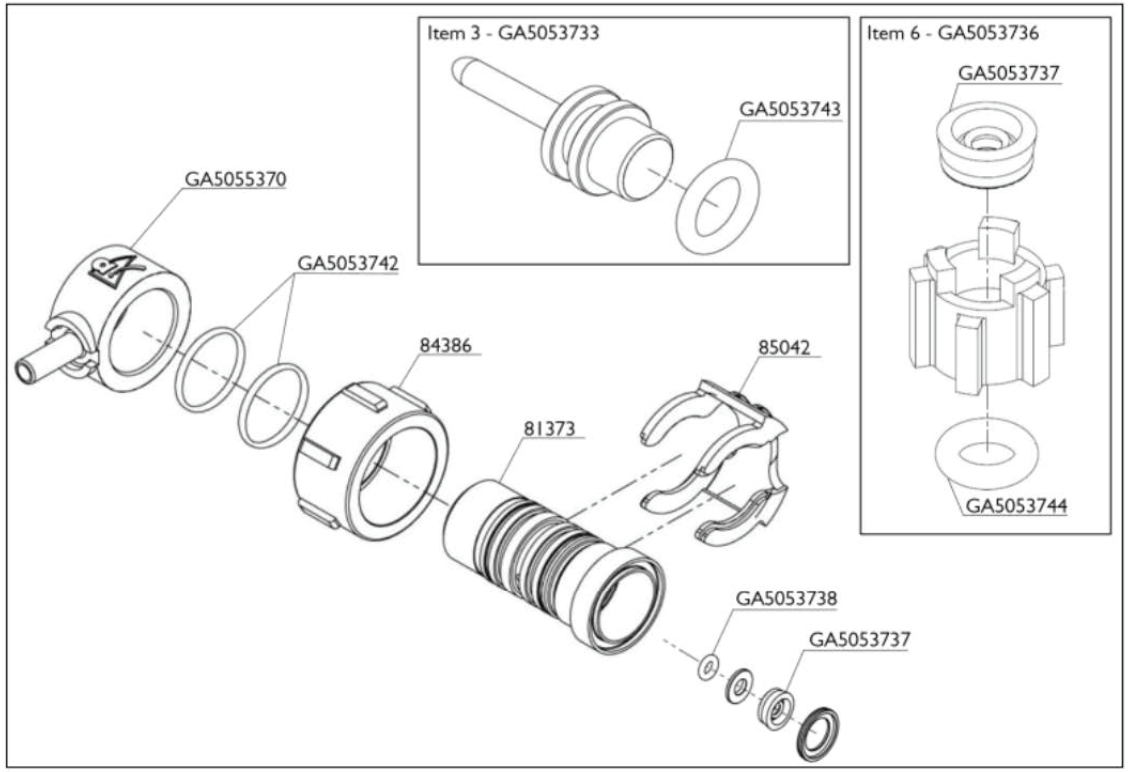

IF DESCRIPTION PREFIX IS ASSEMBLY DRAWING ONLY OR PRODUCTION DRAWING ONLY THE ITEM IS NOT FOR SALE			
ITEM	PART NUMBER	DESCRIPTION	QTY
-	GA5065520	SPRAY STOP, 6mm, RAPIDFIRE, SUIT TEEJET NOZZLE BODY, ALTEK	-
1	GA5053731	END CAP WITH BREATHER, SUIT GA5065520 SPRAY STOP, ALTEK	-
2	GA5053732	SPRING, 10 BAR, SUIT GA5065520 GA5065525, SPRAY STOP, ALTEK	1
3	GA5053733	PISTON, SUIT GA5065520 SPRAY STOP, ALTEK	1
4	GA5053734	VALVE BODY, SUIT GA5065520 SPRAY STOP, ALTEK	1
5	GA5053735	ORING EXTERNAL, SUIT GA5065520 SPRAY STOP, ALTEK	1
6	GA5053736	PLUNGER, SUIT GA5065520 GA5065523 GA5065525 SPRAY STOP, ALTEK	1
-	GA5053737	NUT RING, 4 X 10 X 4.2 FPM SUIT GA5065520 SPRAY STOP, ALTEK	1
-	GA5053738	O RING, 3.68 X 1.78 FPM 75, SUIT GA5065520 SPRAY STOP, ALTEK	1
-	GA5053742	O RING, 16 X 1.5, SUIT GA5065520 SPRAY STOP, ALTEK	1
-	GA5053743	O RING, 9 X 2.5, SUIT GA5065520 SPRAY STOP, ALTEK	1
-	GA5053744	O RING, 6.02 X 2.62, SUIT GA5065520 SPRAY STOP, ALTEK	1
-	GA5055370	NIPPLE, 6mm, SUIT GA5065520, SPRAY STOP BODY, RAPID FIRE, ALTEK	1
GA5065520 GOLDACRES		SPRAY STOP, 6mm, RAPIDFIRE, SUIT TEEJET NOZZLE BODY, ALTEK	REV 00

Nozzles, Altek Spray Stop, 6mm in 4mm Out

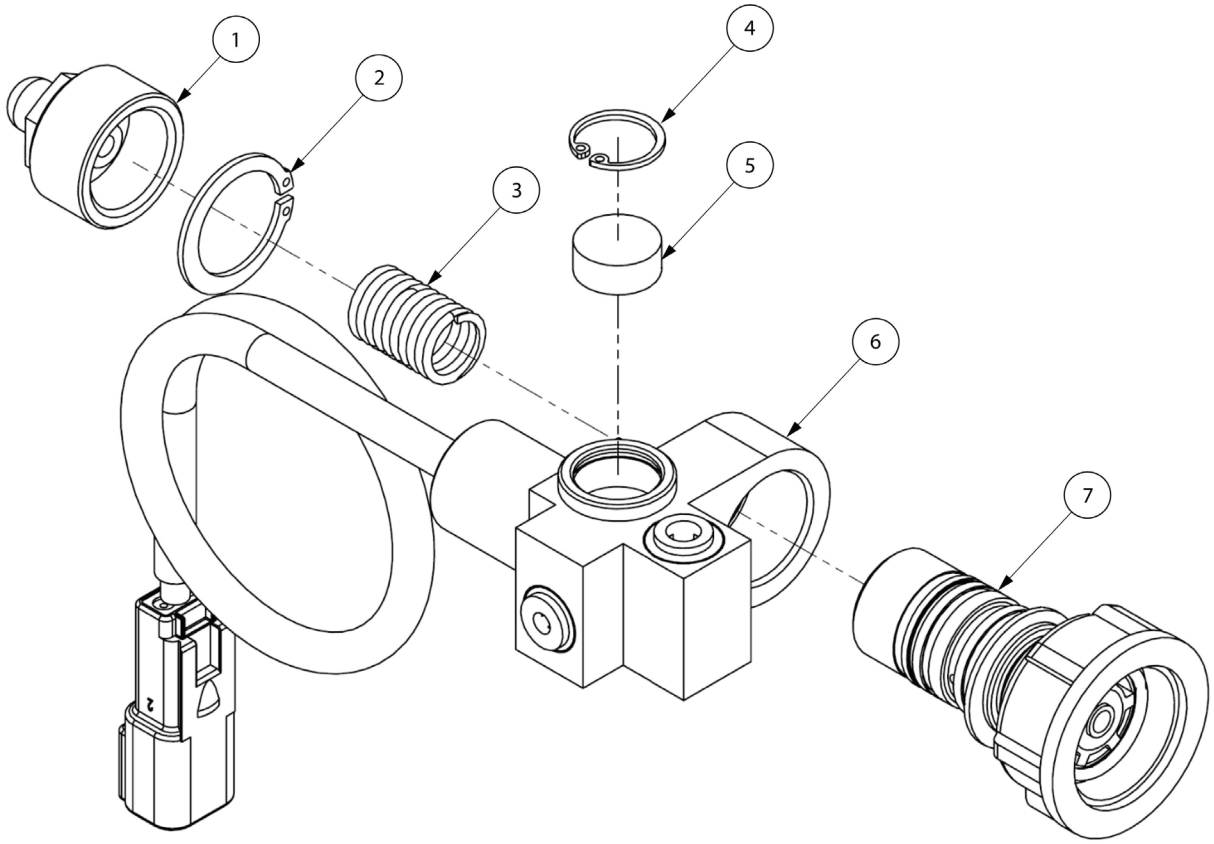

ASSEMBLY DRAWING ONLY ASSEMBLY ON FOLLOWING PAGES			
ITEM	PART NUMBER	DESCRIPTION	QTY
1	GA5053731	END CAP WITH BREATHER, SUIT GA5065520 SPRAY STOP, ALTEK	1
2	GA2000172	CIRCLIP, SPRAY STOP, ALTEK, 21x1.2 DIN-471	1
3	GA5053732	SPRING, 10 BAR, SUIT GA5065520 GA5065525, SPRAY STOP, ALTEK	1
4	GA5026167	CIRCLIP, SUIT, SPRAY STOP, ALTEK	1
5	GA5026168	PLUNGER, BODY, DIRECT CONTROL NOZZLE BODY, ALTEK, SUIT, GA5065525	1
6	GA5026169	BODY, DIRECT CONTROL, MASTER, ALTEK, SUIT, GA5065525	1
7	GA5078810	CARTRIDGE, SPRAY-STOP, ALTEK	1
GA5065525 GOLDACRES		SPRAY STOP, SOLENOID DIRECT CONTROL, RAPIDFIRE, 6mm IN, 4mm OUT, ALTEK,WITH DEUSTCH PLUG	REV 00

Nozzles, Direct Control, Dual, Altek

REPLACEMENT PARTS			
ITEM	PART NUMBER	DESCRIPTION	QTY
-	GA8100663	NOZZLE BODY, TWIN DUAL, AIR SHUT OFF, 1", MASTER, ALTEK 84743	-

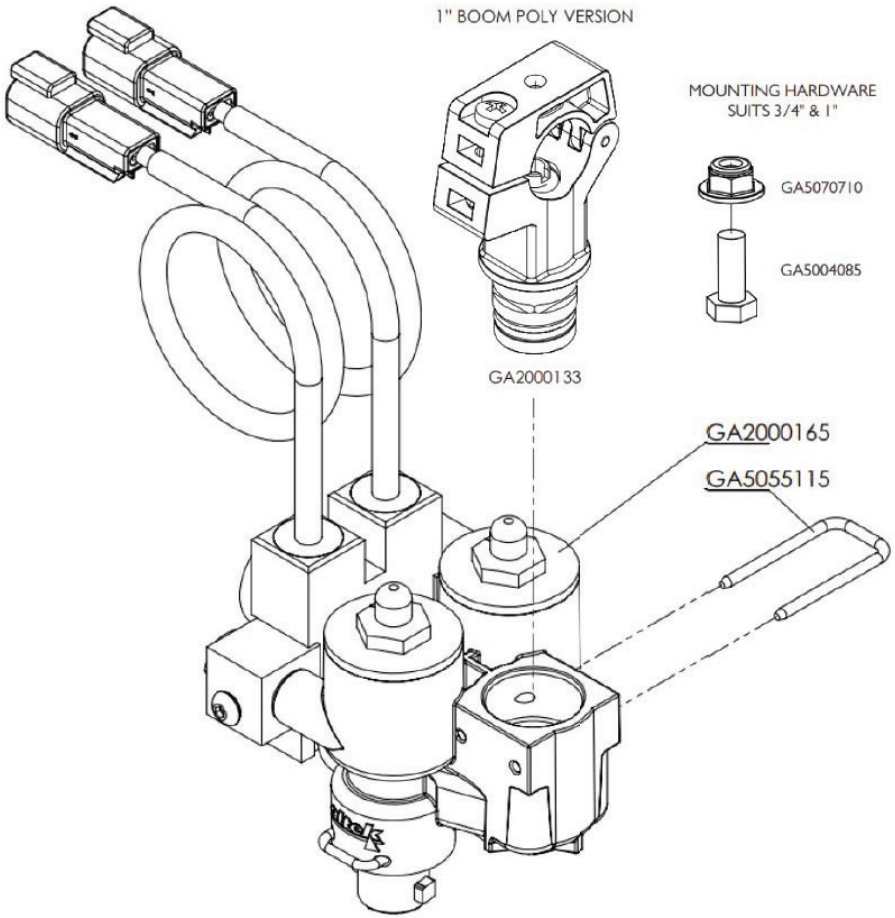

IF DESCRIPTION PREFIX IS ASSEMBLY DRAWING ONLY OR PRODUCTION DRAWING ONLY THE ITEM IS NOT FOR SALE			
ITEM	PART NUMBER	DESCRIPTION	QTY
-	GA5070710	NUT FLANGE PLASTIC M8 X 1.25	1
-	GA5004085	BOLT M8 X 20 GR8.8 ZP	1
-	GA2000133	CLAMP, DUAL NOZZLE BODY, SUIT 1" BOOM POLY, INCLUDES SCREW, NUT AND O RING, ALTEK	1
-	GA2000165	DUAL NOZZLE BODY ASSEMBLY, DIRECT CONTROL, ALTEK, 84188	1
-	GA5055115	U CLIP, 20 X 40 X 3 mm, 82297, SUIT ALTEK NOZZLE BODY GA5065845	1
GA8100663 GOLDACRES		NOZZLE BODY, TWIN / DUAL, AIR SHUT OFF, 1", MASTER, ALTEK 84743	REV 00

Nozzles, Direct Control, Dual Assembly

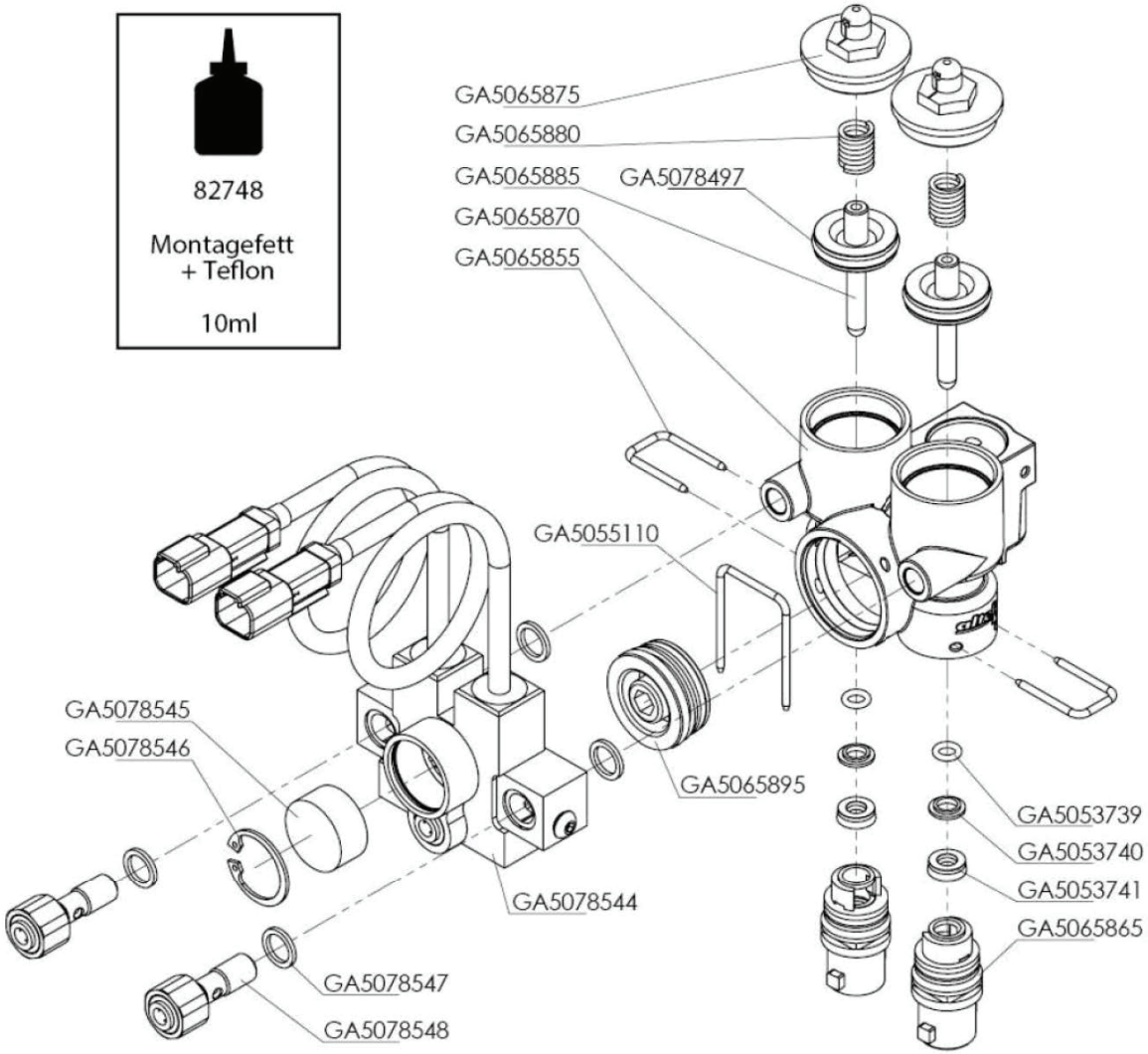

IF DESCRIPTION PREFIX IS ASSEMBLY DRAWING ONLY OR PRODUCTION DRAWING ONLY THE ITEM IS NOT FOR SALE			
ITEM	PART NUMBER	DESCRIPTION	QTY
-	GA5078544	DUAL SOLENOID VALVE, INCLUDING 200mm CABLES & DEUTSCH CONNECTORS, ALTEK, 84187	1
-	GA5065870	OUTER BODY HOUSING, 82418, SUIT ALTEK TWIN NOZZLE BODY	1
-	GA5053739	O RING, 5.6 X 1.8 FPM, SUIT GA5065845, ALTEK	2
-	GA5053740	RETAINING DISK, 11.8 X 6.8 X 2, SUIT GA5065845, ALTEK	2
-	GA5053741	LIP SEAL, 6 X 12 X 4.2 FPM, SUIT GA5065845, ALTEK	2
-	GA5065865	OUTLET, VALVE INNER, NOZZLE BODY, ALTEK, 82532	2
-	GA5065855	U-CLIP, 21931, SUIT ALTEK NOZZLE BODY	2
-	GA5065885	PLUNGER, 82537, SUIT ALTEK NOZZLE BODY	2
-	GA5078497	O RING, 23.5 X 2.6 mm, FPM80	-
-	GA5065880	SPRING, 47902, SUIT ALTEK NOZZLE BODY	2
-	GA5065875	TOP CAP, 82538, SUIT ALTEK NOZZLE BODY	2
-	GA5065895	SHUTOFF PLUG SUIT ALTEK NOZZLE BODY, 82539	1
-	GA5055110	U CLIP 30 X 41 X 2.5 mm, 82298, TO SUIT GA5065845	1
-	GA5078547	SEAL, WHITE PVC, DUAL SOLENOID VALVE, ALTEK, 83172	4
-	GA5078545	BREATHER INSERT, 25.5 X 12 X 12 mm, DUAL SOLENOID VALVE, ALTEK, 84081	1
-	GA5078546	CIRCLIP, 26 X1.2 mm, DUAL SOLENOID VALVE, ALTEK, 84078	1
-	GA5078548	PUSH FITTING, AIR LINE, 6mm, DUAL SOLENOID VALVE, ALTEK, 83733	2
GA5078544 GOLDACRES		DUAL SOLENOID VALVE, INCLUDING 200mm CABLES & DEUTSCH CONNECTORS, ALTEK, 84187	REV 00

Boom Plumbing, 24mt, 250mm Spacing

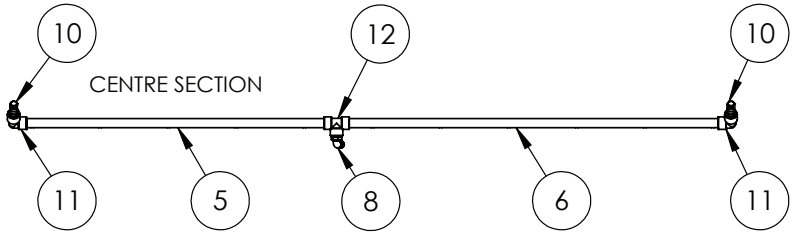

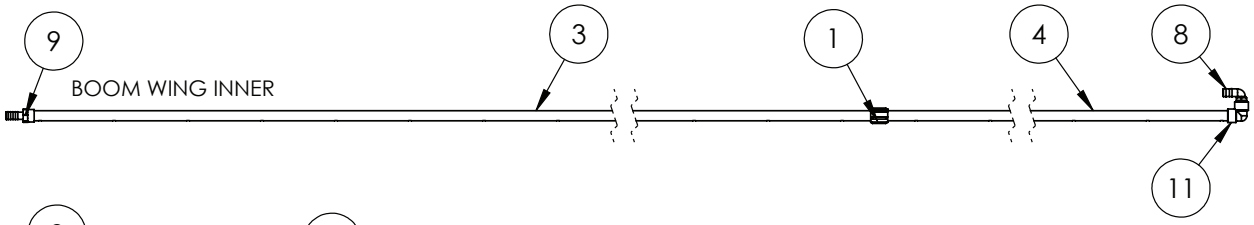

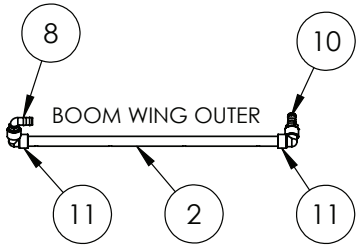

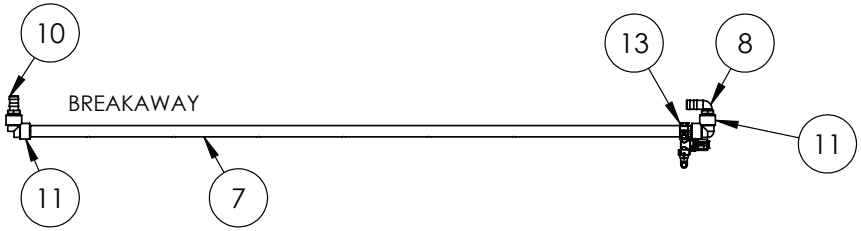

24M, TRITECH MY24, 250mm

IF DESCRIPTION PREFIX IS ASSEMBLY DRAWING ONLY OR PRODUCTION DRAWING ONLY THE ITEM IS NOT FOR SALE			
ITEM	PART NUMBER	DESCRIPTION	QTY
1	GA5077638	COUPLING, SOCKET, 1 FEMALE THREAD, BANJO, CPLG100	2
2	GA4952995	BOOM POLY DRILLED, 1", 24m, LH & RH OUTER SECTION, 250mm, TRITECH MY24	2
3	GA4952505	BOOM POLY DRILLED, 1", 36m, LH & RH INNER SECTION A, 250mm, TRITECH MY23	2
4	GA4952510	BOOM POLY DRILLED, 1", 36m, LH & RH INNER SECTION B, 250mm, TRITECH MY23	2
5	GA4952455	BOOM POLY DRILLED, 1", CENTRE SECTION LH, 250mm, LF SPECIAL, TRITECH MY23	1
6	GA4952450	BOOM POLY DRILLED, 1", CENTRE SECTION RH, 250mm, LF SPECIAL, TRITECH MY23	1
7	GA4953015	BOOM POLY DRILLED, 1", LH & RH 24m BREAKAWAY, 250mm, TRITECH MY24	2
8	GA5077723	HOSE BARB, ELBOW, 90 DEGREE, 1" MALE X 1" HOSE, BANJO	7
9	GA5077747	HOSE BARB, STRAIGHT, 1 FEMALE THREAD X 1 HOSE, BANJO	2
10	GA5077718	HOSE BARB, STRAIGHT, 1 MALE THREAD X 1 HOSE, BANJO	6
11	GA5077655	STREET ELBOW, 90 DEGREE, 1 FEMALE THREAD X 1 FEMALE THREAD, BANJO, EL100-90	12
12	GA5078151	TEE, THREADED, 1" FEMALE, BANJO	1
13	GA4950020	ASSEMBLY DRAWING ONLY, FENCE LINE JET ASSEMBLY, RH, 1", TRITECH	1
	GA4950015	ASSEMBLY DRAWING ONLY, FENCE LINE JET ASSEMBLY, LH, 1", TRITECH	1
GA7500141 GOLDACRES		LAYOUT, BOOM SECTION PLUMBING, 10 SECTION, 24M, 250mm, G4 SERIES 2, TRITECH MY24	REV 00

Boom Plumbing, 24mt, 500mm Broadacre

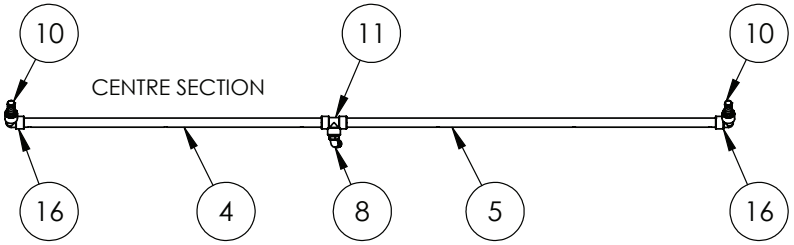

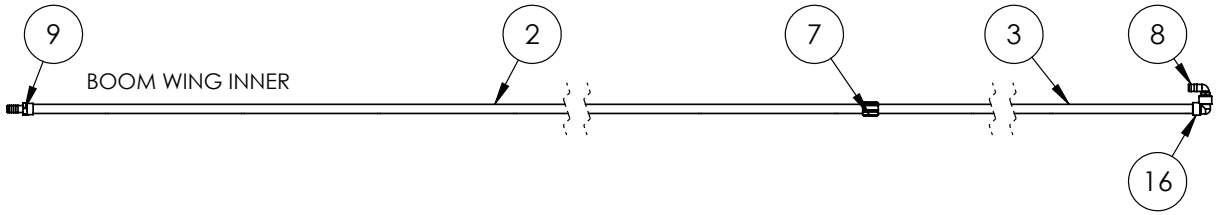

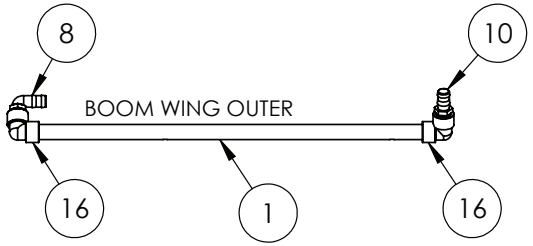

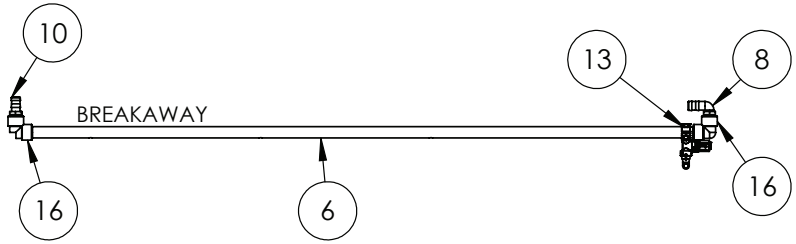

IF DESCRIPTION PREFIX IS ASSEMBLY DRAWING ONLY OR PRODUCTION DRAWING ONLY THE ITEM IS NOT FOR SALE			
ITEM	PART NUMBER	DESCRIPTION	QTY
1	GA4952975	BOOM POLY DRILLED, 1", 24m, LH & RH OUTER SECTION, 500mm BROADACRE, TRITECH MY24	2
2	GA4953360	BOOM POLY DRILLED, 1", 36m, LH & RH INNER SECTION A, 500mm BROADACRE, LF SPECIAL, TRITECH MY23	2
3	GA4953365	BOOM POLY DRILLED, 1", 36m, LH & RH INNER SECTION B, 500mm BROADACRE, LF SPECIAL, TRITECH MY23	2
4	GA4952860	BOOM POLY DRILLED, 1", CENTRE SECTION LH, 500mm BROADACRE, TRITECH MY23	1
5	GA4952855	BOOM POLY DRILLED, 1", CENTRE SECTION RH, 500mm BROADACRE, TRITECH MY24	1
6	GA4953030	BOOM POLY DRILLED, 1", LH & RH 24m BREAKAWAY, 500mm BROADACRE, TRITECH MY24	2
7	GA5077638	COUPLING, SOCKET, 1 FEMALE THREAD, BANJO, CPLG100	2
8	GA5077723	HOSE BARB, ELBOW, 90 DEGREE, 1" MALE X 1" HOSE, BANJO	7
9	GA5077747	HOSE BARB, STRAIGHT, 1 FEMALE THREAD X 1 HOSE, BANJO	2
10	GA5077718	HOSE BARB, STRAIGHT, 1 MALE THREAD X 1 HOSE, BANJO	6
11	GA5078151	TEE, THREADED, 1" FEMALE, BANJO	1
18	GA4950020	ASSEMBLY DRAWING ONLY, FENCE LINE JET ASSEMBLY, RH, 1", TRITECH	1
	GA4950015	ASSEMBLY DRAWING ONLY, FENCE LINE JET ASSEMBLY, LH, 1", TRITECH	1
GA7500143 GOLDACRES		LAYOUT, BOOM SECTION PLUMBING, 10 SECTION, 24M, 500mm BROARDACRE, G4 SERIES 2, TRITECH MY24	REV 00

24M, TRITECH MY24, 500mm BROADACRE

Boom Plumbing, 24mt, 500mm Rowcrop

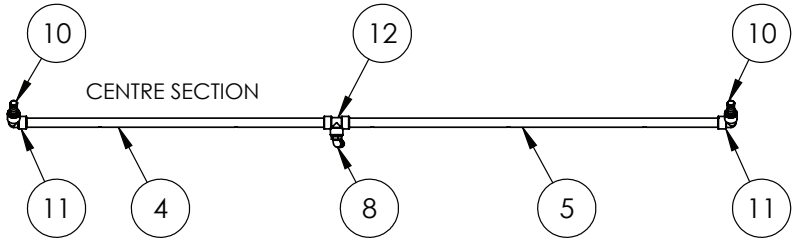

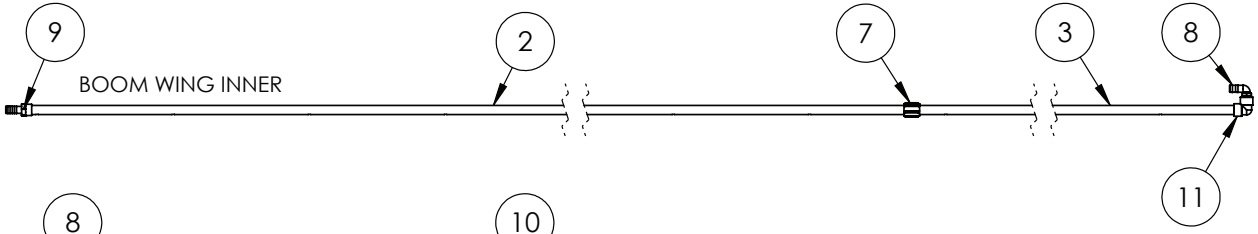

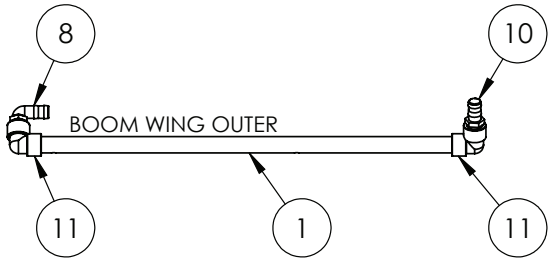

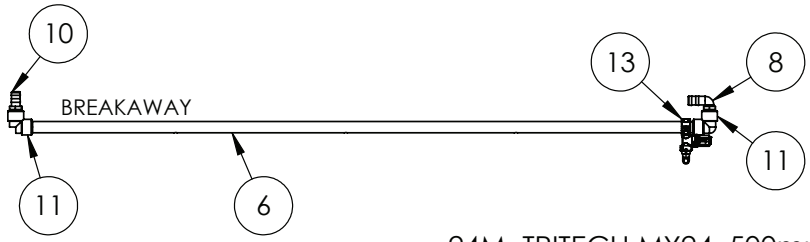

24M, TRITECH MY24, 500mm ROWCROP

IF DESCRIPTION PREFIX IS ASSEMBLY DRAWING ONLY OR PRODUCTION DRAWING ONLY THE ITEM IS NOT FOR SALE			
ITEM	PART NUMBER	DESCRIPTION	QTY
1	GA4953045	BOOM POLY DRILLED, 1", 24m, LH & RH OUTER SECTION, 500mm ROWCROP, TRITECH MY24	2
2	GA4952920	BOOM POLY DRILLED, 1", 36m, LH & RH INNER SECTION A, 500mm ROWCROP, TRITECH MY23	2
3	GA4952925	BOOM POLY DRILLED, 1", 36m, LH & RH INNER SECTION B, 500mm ROWCROP, TRITECH MY23	2
4	GA4952910	BOOM POLY DRILLED, 1", CENTRE SECTION LH, 500mm ROWCROP, TRITECH MY24	1
5	GA4952905	BOOM POLY DRILLED, 1", CENTRE SECTION RH, 500mm ROWCROP, TRITECH MY24	1
6	GA4953000	BOOM POLY DRILLED, 1", LH & RH 24m BREAKAWAY, 500mm ROWCROP, TRITECH MY24	2
7	GA5077638	COUPLING, SOCKET, 1 FEMALE THREAD, BANJO, CPLG100	2
8	GA5077723	HOSE BARB, ELBOW, 90 DEGREE, 1" MALE X 1" HOSE, BANJO	7
9	GA5077747	HOSE BARB, STRAIGHT, 1 FEMALE THREAD X 1 HOSE, BANJO	2
10	GA5077718	HOSE BARB, STRAIGHT, 1 MALE THREAD X 1 HOSE, BANJO	6
11	GA5077655	STREET ELBOW, 90 DEGREE, 1 FEMALE THREAD X 1 FEMALE THREAD, BANJO, EL100-90	12
12	GA5078151	TEE, THREADED, 1" FEMALE, BANJO	1
13	GA4950020	ASSEMBLY DRAWING ONLY, FENCE LINE JET ASSEMBLY, LH, 1", TRITECH	1
	GA4950015	ASSEMBLY DRAWING ONLY, FENCE LINE JET ASSEMBLY, RH, 1", TRITECH	1
GA7500145 GOLDACRES		LAYOUT, BOOM SECTION PLUMBING, 10 SECTION, 24M, 500mm ROWCROP, G4 SERIES 2, TRITECH MY24	REV 00

Boom Plumbing, 28mt, 250mm Spacing

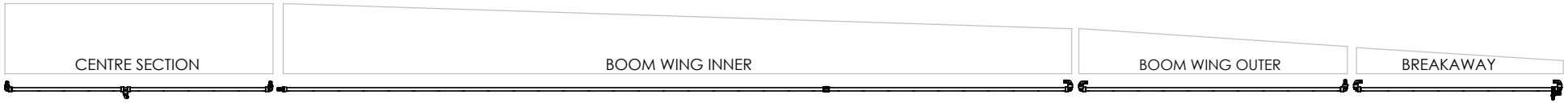

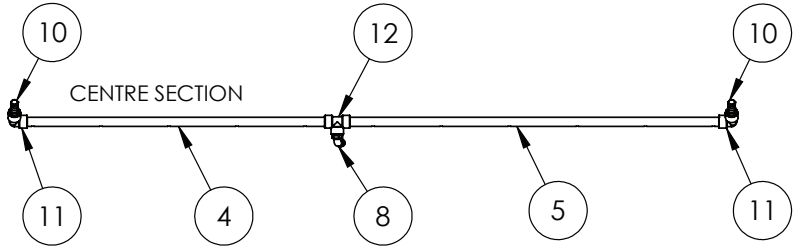

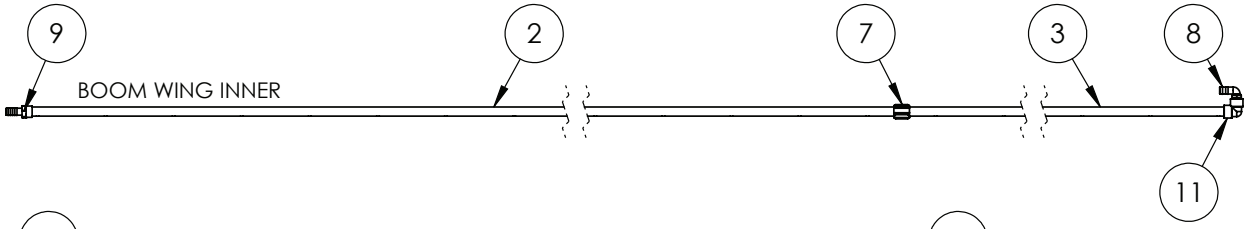

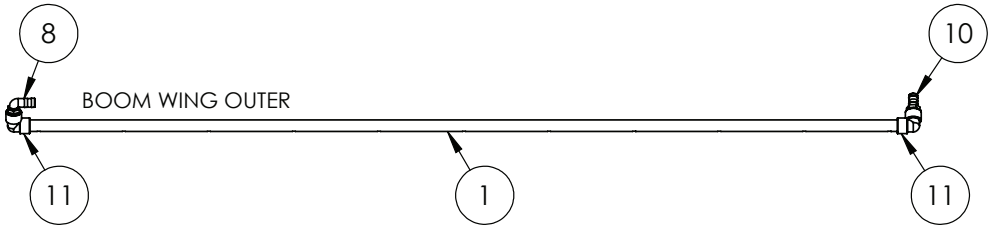

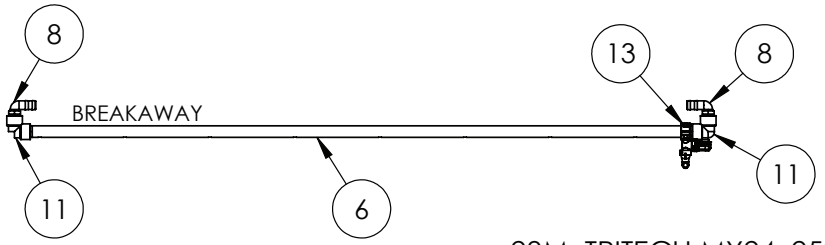

28M, TRITECH MY24, 250mm

IF DESCRIPTION PREFIX IS ASSEMBLY DRAWING ONLY OR PRODUCTION DRAWING ONLY THE ITEM IS NOT FOR SALE			
ITEM	PART NUMBER	DESCRIPTION	QTY
1	GA4953075	BOOM POLY DRILLED, 1", 28m, LH & RH OUTER SECTION, 250mm, TRITECH MY24	2
2	GA4952505	BOOM POLY DRILLED, 1", 36m, LH & RH INNER SECTION A, 250mm, TRITECH MY23	2
3	GA4952510	BOOM POLY DRILLED, 1", 36m, LH & RH INNER SECTION B, 250mm, TRITECH MY23	2
4	GA4952455	BOOM POLY DRILLED, 1", CENTRE SECTION LH, 250mm, LF SPECIAL, TRITECH MY23	1
5	GA4952450	BOOM POLY DRILLED, 1", CENTRE SECTION RH, 250mm, LF SPECIAL, TRITECH MY23	1
6	GA4952895	BOOM POLY DRILLED, 1", LH & RH 36m BREAKAWAY, 250mm, TRITECH MY24	2
7	GA5077638	COUPLING, SOCKET, 1 FEMALE THREAD, BANJO, CPLG100	2
8	GA5077723	HOSE BARB, ELBOW, 90 DEGREE, 1" MALE X 1" HOSE, BANJO	9
9	GA5077747	HOSE BARB, STRAIGHT, 1 FEMALE THREAD X 1 HOSE, BANJO	2
10	GA5077718	HOSE BARB, STRAIGHT, 1 MALE THREAD X 1 HOSE, BANJO	4
11	GA5077655	STREET ELBOW, 90 DEGREE, 1 FEMALE THREAD X 1 FEMALE THREAD, BANJO, EL100-90	12
12	GA5078151	TEE, THREADED, 1" FEMALE, BANJO	1
13	GA4950020	ASSEMBLY DRAWING ONLY, FENCE LINE JET ASSEMBLY, LH, 1", TRITECH	1
	GA4950015	ASSEMBLY DRAWING ONLY, FENCE LINE JET ASSEMBLY, RH, 1", TRITECH	1
GA7500147 GOLDACRES		LAYOUT, BOOM SECTION PLUMBING, 10 SECTION, 28M, 250mm, G4 SERIES 2, TRITECH MY24	REV 00

Boom Plumbing, 28mt, 500mm Broadacre

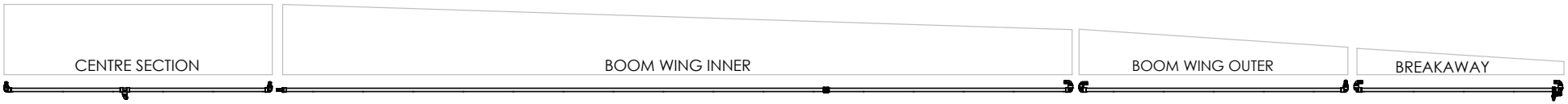

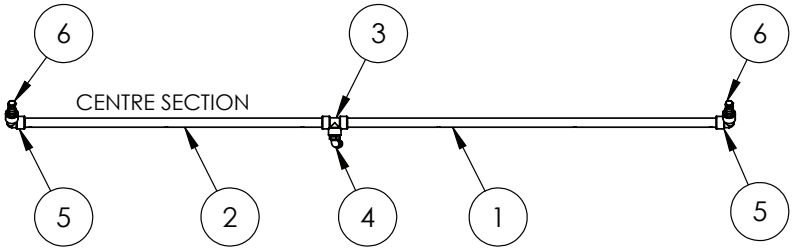

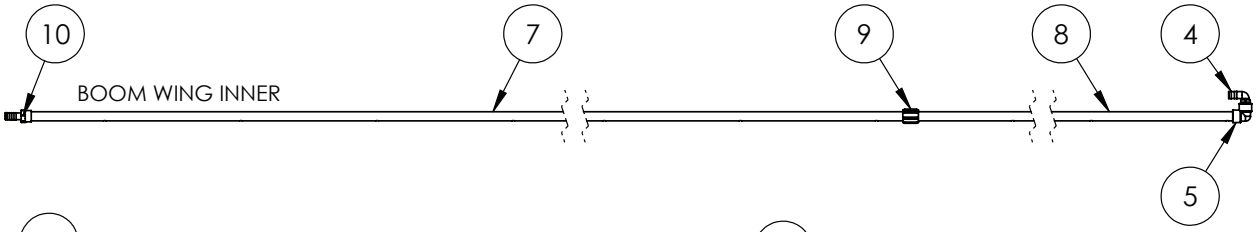

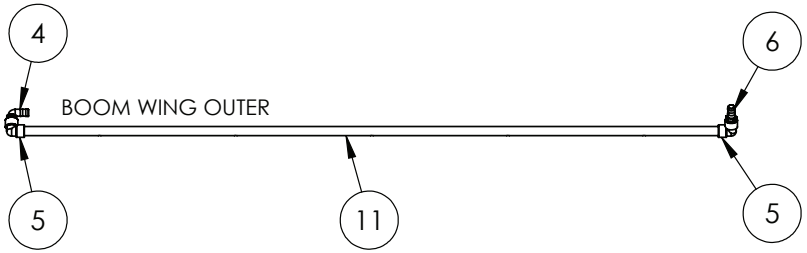

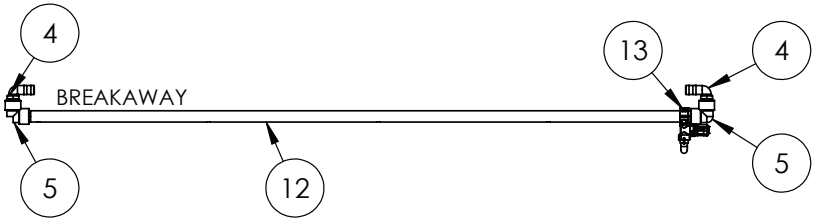

28M, TRITECH MY24, 500mm BROADACRE

IF DESCRIPTION PREFIX IS ASSEMBLY DRAWING ONLY OR PRODUCTION DRAWING ONLY THE ITEM IS NOT FOR SALE

ITEM	PART NUMBER	DESCRIPTION	QTY
1	GA4952855	BOOM POLY DRILLED, 1", CENTRE SECTION RH, 500mm BROADACRE, TRITECH MY24	1
2	GA4952860	BOOM POLY DRILLED, 1", CENTRE SECTION LH, 500mm BROADACRE, TRITECH MY23	1
3	GA5078151	TEE, THREADED, 1" FEMALE, BANJO	1
4	GA5077723	HOSE BARB, ELBOW, 90 DEGREE, 1" MALE X 1" HOSE, BANJO	9
5	GA5077655	STREET ELBOW, 90 DEGREE, 1 FEMALE THREAD X 1 FEMALE THREAD, BANJO, EL100-90	12
6	GA5077718	HOSE BARB, STRAIGHT, 1 MALE THREAD X 1 HOSE, BANJO	4
7	GA4953360	BOOM POLY DRILLED, 1", 36m, LH & RH INNER SECTION A, 500mm BROADACRE, LF SPECIAL, TRITECH MY23	2
8	GA4953365	BOOM POLY DRILLED, 1", 36m, LH & RH INNER SECTION B, 500mm BROADACRE, LF SPECIAL, TRITECH MY23	2
9	GA5077638	COUPLING, SOCKET, 1 FEMALE THREAD, BANJO, CPLG100	2
10	GA5077747	HOSE BARB, STRAIGHT, 1 FEMALE THREAD X 1 HOSE, BANJO	2
11	GA4953060	BOOM POLY DRILLED, 1", 28m, LH & RH OUTER SECTION, 500mm BROADACRE, TRITECH MY24	2
12	GA4952835	BOOM POLY DRILLED, 1", 36m, 2m BREAKAWAY LH & RH, 500mm BROADACRE, TRITECH MY24	2
13	GA4950020	ASSEMBLY DRAWING ONLY, FENCE LINE JET ASSEMBLY, RH, 1", TRITECH	1
	GA4950015	ASSEMBLY DRAWING ONLY, FENCE LINE JET ASSEMBLY, LH, 1", TRITECH	1
GA7500149 GOLDACRES		LAYOUT, BOOM SECTION PLUMBING, 10 SECTION, 28M, 500mm, G4 SERIES 2, TRITECH MY24	REV 00

Boom Plumbing, 28mt, 500mm Rowcrop

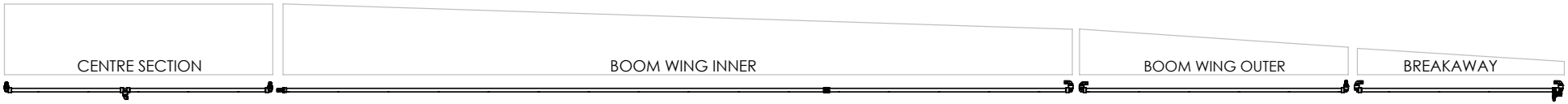

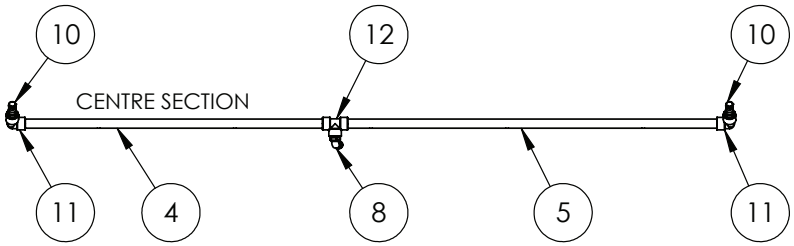

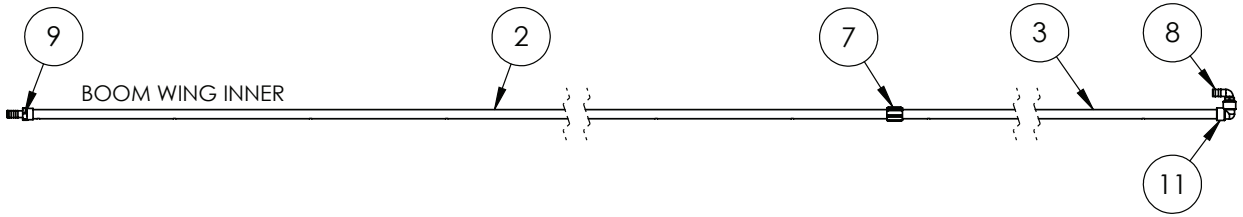

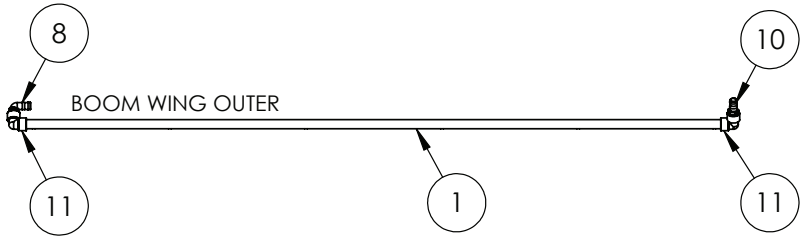

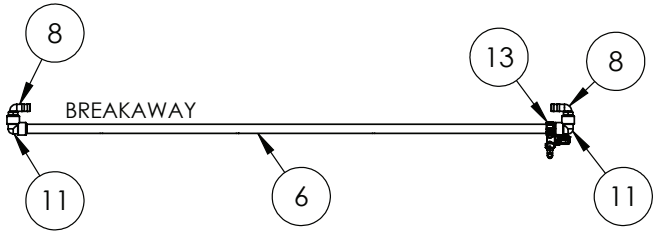

28M, TRITECH MY24, 500mm ROWCROP

IF DESCRIPTION PREFIX IS ASSEMBLY DRAWING ONLY OR PRODUCTION DRAWING ONLY THE ITEM IS NOT FOR SALE			
ITEM	PART NUMBER	DESCRIPTION	QTY
1	GA4953090	BOOM POLY DRILLED, 1", 28m, LH & RH OUTER SECTION, 500mm ROWCROP, TRITECH MY24	2
2	GA4952920	BOOM POLY DRILLED, 1", 36m, LH & RH INNER SECTION A, 500mm ROWCROP, TRITECH MY23	2
3	GA4952925	BOOM POLY DRILLED, 1", 36m, LH & RH INNER SECTION B, 500mm ROWCROP, TRITECH MY23	2
4	GA4952910	BOOM POLY DRILLED, 1", CENTRE SECTION LH, 500mm ROWCROP, TRITECH MY24	1
5	GA4952905	BOOM POLY DRILLED, 1", CENTRE SECTION RH, 500mm ROWCROP, TRITECH MY24	1
6	GA4952965	BOOM POLY DRILLED, 1", LH & RH 36m BREAKAWAY, 500mm ROWCROP, TRITECH MY24	2
7	GA5077638	COUPLING, SOCKET, 1 FEMALE THREAD, BANJO, CPLG100	2
8	GA5077723	HOSE BARB, ELBOW, 90 DEGREE, 1" MALE X 1" HOSE, BANJO	9
9	GA5077747	HOSE BARB, STRAIGHT, 1 FEMALE THREAD X 1 HOSE, BANJO	2
10	GA5077718	HOSE BARB, STRAIGHT, 1 MALE THREAD X 1 HOSE, BANJO	4
11	GA5077655	STREET ELBOW, 90 DEGREE, 1 FEMALE THREAD X 1 FEMALE THREAD, BANJO, EL100-90	12
12	GA5078151	TEE, THREADED, 1" FEMALE, BANJO	1
13	GA4950020	ASSEMBLY DRAWING ONLY, FENCE LINE JET ASSEMBLY, RH, 1", TRITECH	1
	GA4950015	ASSEMBLY DRAWING ONLY, FENCE LINE JET ASSEMBLY, LH, 1", TRITECH	1
GA7500151 GOLDACRES		LAYOUT, BOOM SECTION PLUMBING, 10 SECTION, 28M, 500mm ROWCROP, G4 SERIES 2, TRITECH MY24	REV 00

Boom Plumbing, 30mt, 250mm Spacing

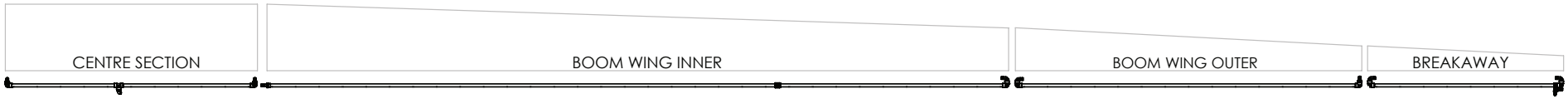

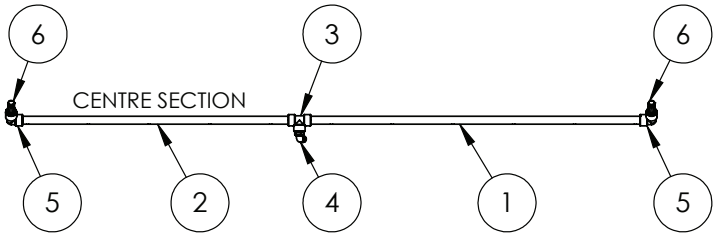

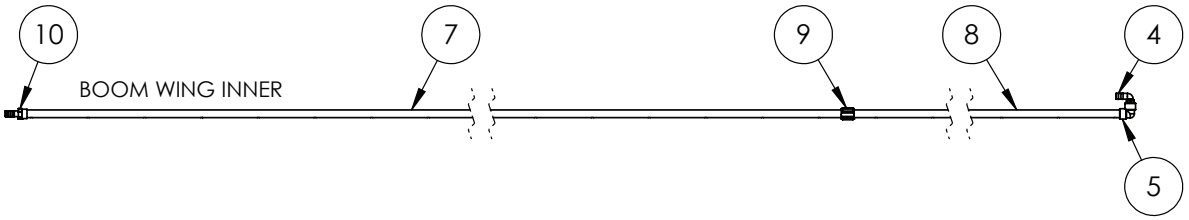

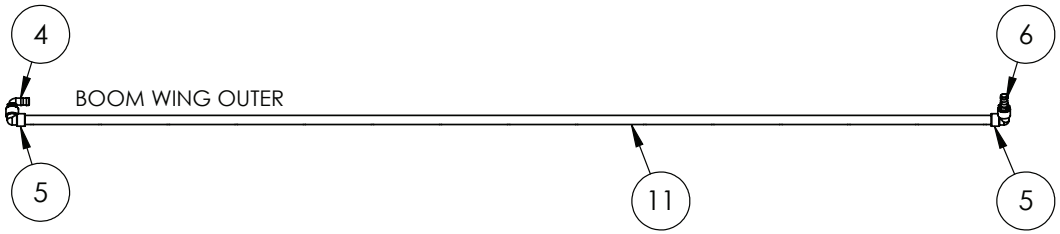

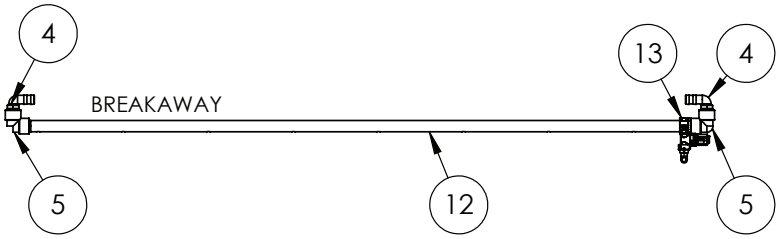

30M, TRITECH MY24, 250mm

IF DESCRIPTION PREFIX IS ASSEMBLY DRAWING ONLY OR PRODUCTION DRAWING ONLY THE ITEM IS NOT FOR SALE			
ITEM	PART NUMBER	DESCRIPTION	QTY
1	GA4952450	BOOM POLY DRILLED, 1", CENTRE SECTION RH, 250mm, LF SPECIAL, TRITECH MY23	1
2	GA4952455	BOOM POLY DRILLED, 1", CENTRE SECTION LH, 250mm, LF SPECIAL, TRITECH MY23	1
3	GA5078151	TEE, THREADED, 1" FEMALE, BANJO	1
4	GA5077723	HOSE BARB, ELBOW, 90 DEGREE, 1" MALE X 1" HOSE, BANJO	9
5	GA5077655	STREET ELBOW, 90 DEGREE, 1 FEMALE THREAD X 1 FEMALE THREAD, BANJO, EL100-90	12
6	GA5077718	HOSE BARB, STRAIGHT, 1 MALE THREAD X 1 HOSE, BANJO	4
7	GA4952505	BOOM POLY DRILLED, 1", 36m, LH & RH INNER SECTION A, 250mm, TRITECH MY23	2
8	GA4952510	BOOM POLY DRILLED, 1", 36m, LH & RH INNER SECTION B, 250mm, TRITECH MY23	2
9	GA5077638	COUPLING, SOCKET, 1 FEMALE THREAD, BANJO, CPLG100	2
10	GA5077747	HOSE BARB, STRAIGHT, 1 FEMALE THREAD X 1 HOSE, BANJO	2
11	GA4953120	BOOM POLY DRILLED, 1", 30m, LH & RH OUTER SECTION, 250mm, TRITECH MY24	2
12	GA4952895	BOOM POLY DRILLED, 1", LH & RH 36m BREAKAWAY, 250mm, TRITECH MY24	2
13	GA4950020	ASSEMBLY DRAWING ONLY, FENCE LINE JET ASSEMBLY, RH, 1", TRITECH	1
	GA4950015	ASSEMBLY DRAWING ONLY, FENCE LINE JET ASSEMBLY, LH, 1", TRITECH	1
GA7500153 GOLDACRES		LAYOUT, BOOM SECTION PLUMBING, 10 SECTION, 30M, 250mm, G4 SERIES 2, TRITECH MY24	REV 00

Boom Plumbing, 30mt, 500mm Broadacre

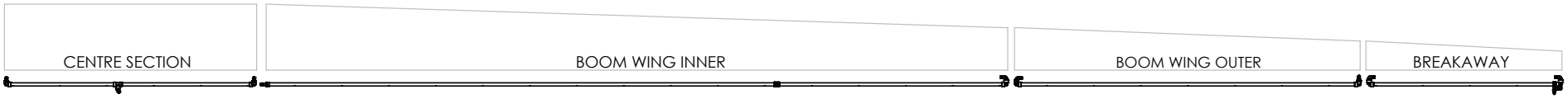

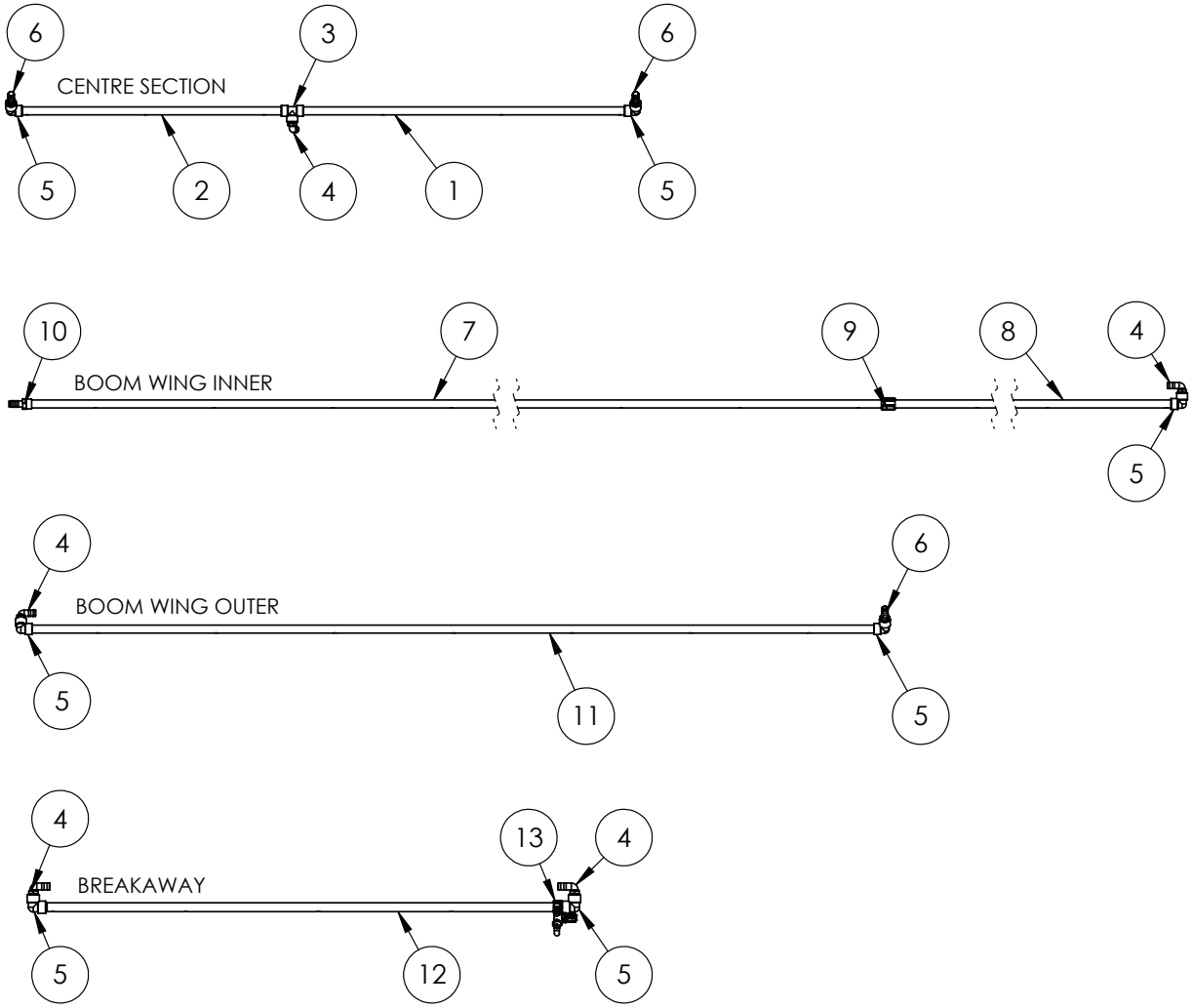

30M, TRITECH MY24, 500mm BROADACRE

IF DESCRIPTION PREFIX IS ASSEMBLY DRAWING ONLY OR PRODUCTION DRAWING ONLY THE ITEM IS NOT FOR SALE			
ITEM	PART NUMBER	DESCRIPTION	QTY
1	GA4952855	BOOM POLY DRILLED, 1", CENTRE SECTION RH, 500mm BROADACRE, TRITECH MY24	1
2	GA4952860	BOOM POLY DRILLED, 1", CENTRE SECTION LH, 500mm BROADACRE, TRITECH MY23	1
3	GA5078151	TEE, THREADED, 1" FEMALE, BANJO	1
4	GA5077723	HOSE BARB, ELBOW, 90 DEGREE, 1" MALE X 1" HOSE, BANJO	9
5	GA5077655	STREET ELBOW, 90 DEGREE, 1 FEMALE THREAD X 1 FEMALE THREAD, BANJO, EL100-90	12
6	GA5077718	HOSE BARB, STRAIGHT, 1 MALE THREAD X 1 HOSE, BANJO	4
7	GA4953360	BOOM POLY DRILLED, 1", 36m, LH & RH INNER SECTION A, 500mm BROADACRE, LF SPECIAL, TRITECH MY23	2
8	GA4953365	BOOM POLY DRILLED, 1", 36m, LH & RH INNER SECTION B, 500mm BROADACRE, LF SPECIAL, TRITECH MY23	2
9	GA5077638	COUPLING, SOCKET, 1 FEMALE THREAD, BANJO, CPLG100	2
10	GA5077747	HOSE BARB, STRAIGHT, 1 FEMALE THREAD X 1 HOSE, BANJO	2
11	GA4953105	BOOM POLY DRILLED, 1", 30m, LH & RH OUTER SECTION, 500mm BROADACRE, TRITECH MY24	2
12	GA4952835	BOOM POLY DRILLED, 1", 36m, 2m BREAKAWAY LH & RH, 500mm BROADACRE, TRITECH MY24	2
13	GA4950020	ASSEMBLY DRAWING ONLY, FENCE LINE JET ASSEMBLY, RH, 1", TRITECH	1
	GA4950015	ASSEMBLY DRAWING ONLY, FENCE LINE JET ASSEMBLY, LH, 1", TRITECH	1
GA7500155 GOLDACRES		LAYOUT, BOOM SECTION PLUMBING, 10 SECTION, 30M, 500mm BROARDACRE, G4 SERIES 2, TRITECH MY24	REV 00

Boom Plumbing, 30mt, 500mm Rowcrop

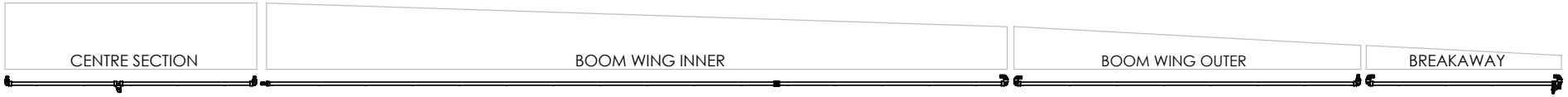

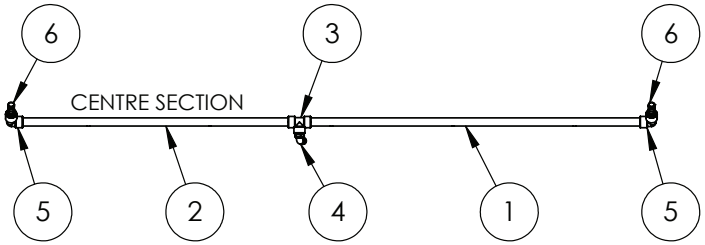

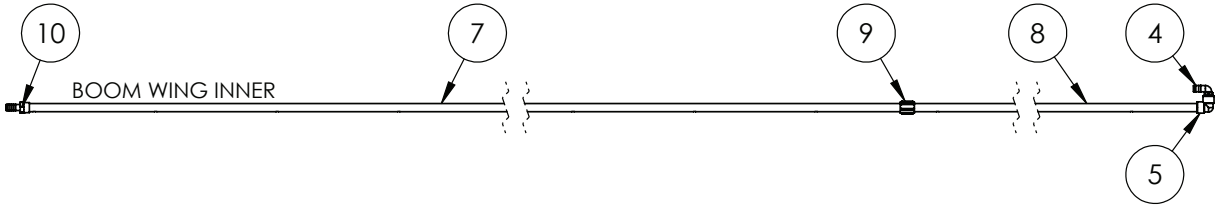

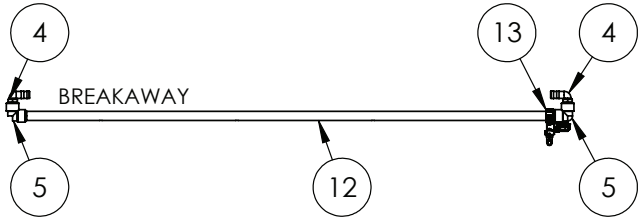

30M, TRITECH MY24, 500mm ROWCROP

IF DESCRIPTION PREFIX IS ASSEMBLY DRAWING ONLY OR PRODUCTION DRAWING ONLY THE ITEM IS NOT FOR SALE			
ITEM	PART NUMBER	DESCRIPTION	QTY
1	GA4952905	BOOM POLY DRILLED, 1", CENTRE SECTION RH, 500mm ROWCROP, TRITECH MY24	1
2	GA4952910	BOOM POLY DRILLED, 1", CENTRE SECTION LH, 500mm ROWCROP, TRITECH MY24	1
3	GA5078151	TEE, THREADED, 1" FEMALE, BANJO	1
4	GA5077723	HOSE BARB, ELBOW, 90 DEGREE, 1" MALE X 1" HOSE, BANJO	9
5	GA5077655	STREET ELBOW, 90 DEGREE, 1 FEMALE THREAD X 1 FEMALE THREAD, BANJO, EL100-90	12
6	GA5077718	HOSE BARB, STRAIGHT, 1 MALE THREAD X 1 HOSE, BANJO	4
7	GA4952920	BOOM POLY DRILLED, 1", 36m, LH & RH INNER SECTION A, 500mm ROWCROP, TRITECH MY23	2
8	GA4952925	BOOM POLY DRILLED, 1", 36m, LH & RH INNER SECTION B, 500mm ROWCROP, TRITECH MY23	2
9	GA5077638	COUPLING, SOCKET, 1 FEMALE THREAD, BANJO, CPLG100	2
10	GA5077747	HOSE BARB, STRAIGHT, 1 FEMALE THREAD X 1 HOSE, BANJO	2
11	GA4953135	BOOM POLY DRILLED, 1", 30m, LH & RH OUTER SECTION, 500mm ROWCROP, TRITECH MY24	2
12	GA4952965	BOOM POLY DRILLED, 1", LH & RH 36m BREAKAWAY, 500mm ROWCROP, TRITECH MY24	2
13	GA4950020	ASSEMBLY DRAWING ONLY, FENCE LINE JET ASSEMBLY, RH, 1", TRITECH	1
	GA4950015	ASSEMBLY DRAWING ONLY, FENCE LINE JET ASSEMBLY, LH, 1", TRITECH	1
GA7500157 GOLDACRES		LAYOUT, BOOM SECTION PLUMBING, 10 SECTION, 30M, 500mm ROWCROP, G4 SERIES 2, TRITECH MY24	REV 00

Boom Plumbing, 36mt, 250mm Spacing

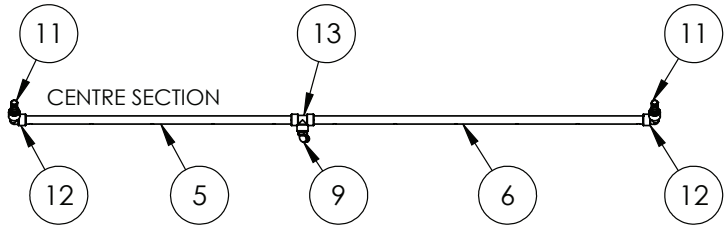

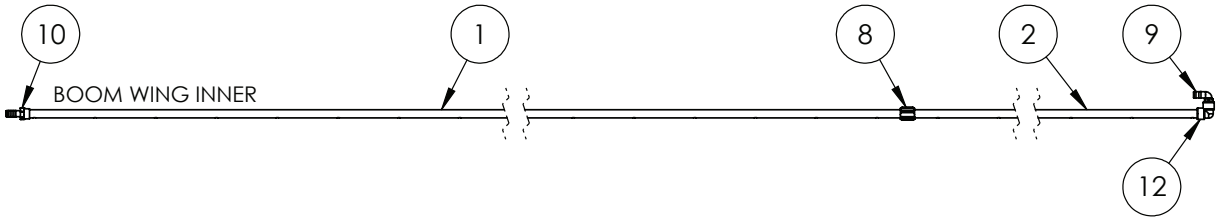

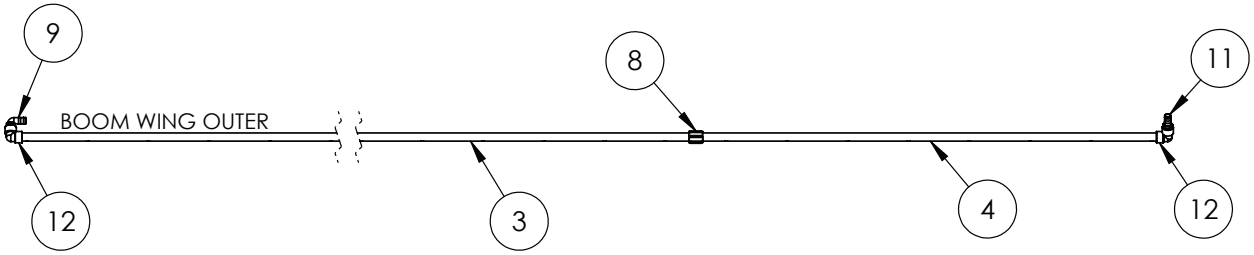

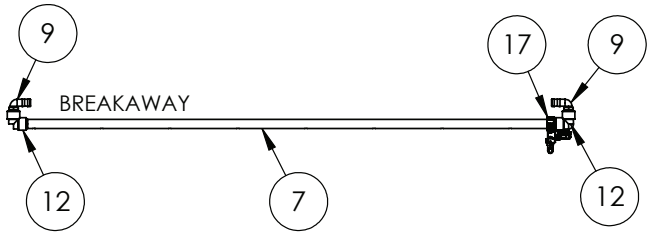

36M, TRITECH MY24, 250mm

IF DESCRIPTION PREFIX IS ASSEMBLY DRAWING ONLY OR PRODUCTION DRAWING ONLY THE ITEM IS NOT FOR SALE			
ITEM	PART NUMBER	DESCRIPTION	QTY
1	GA4952505	BOOM POLY DRILLED, 1", 36m, LH & RH INNER SECTION A, 250mm, TRITECH MY23	2
2	GA4952510	BOOM POLY DRILLED, 1", 36m, LH & RH INNER SECTION B, 250mm, TRITECH MY23	2
3	GA4952875	BOOM POLY DRILLED, 1", 36m, LH & RH OUTER SECTION A, 250mm, TRITECH MY24	2
4	GA4952880	BOOM POLY DRILLED, 1", 36m, LH & RH OUTER SECTION B, 250mm, TRITECH MY23	2
5	GA4952455	BOOM POLY DRILLED, 1", CENTRE SECTION LH, 250mm, LF SPECIAL, TRITECH MY23	1
6	GA4952450	BOOM POLY DRILLED, 1", CENTRE SECTION RH, 250mm, LF SPECIAL, TRITECH MY23	1
7	GA4952895	BOOM POLY DRILLED, 1", LH & RH 36m BREAKAWAY, 250mm, TRITECH MY24	2
8	GA5077638	COUPLING, SOCKET, 1 FEMALE THREAD, BANJO, CPLG100	4
9	GA5077723	HOSE BARB, ELBOW, 90 DEGREE, 1" MALE X 1" HOSE, BANJO	9
10	GA5077747	HOSE BARB, STRAIGHT, 1 FEMALE THREAD X 1 HOSE, BANJO	2
11	GA5077718	HOSE BARB, STRAIGHT, 1 MALE THREAD X 1 HOSE, BANJO	4
12	GA5077655	STREET ELBOW, 90 DEGREE, 1 FEMALE THREAD X 1 FEMALE THREAD, BANJO, EL100-90	12
13	GA5078151	TEE, THREADED, 1" FEMALE, BANJO	1
14	GA4950020	ASSEMBLY DRAWING ONLY, FENCE LINE JET, RH, 1", TRITECH	1
	GA4950015	ASSEMBLY DRAWING ONLY, FENCE LINE JET, LH, 1", TRITECH	1
GA7500136 GOLDACRES		LAYOUT, BOOM SECTION PLUMBING, 10 SECTION, 36M, 250mm, G4 SERIES 2, TRITECH MY24	REV 00

Boom Plumbing, 36mt, 500mm Broadacre

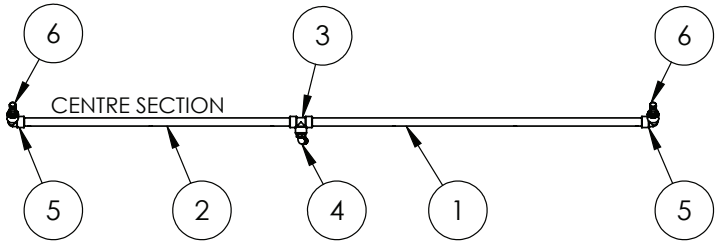

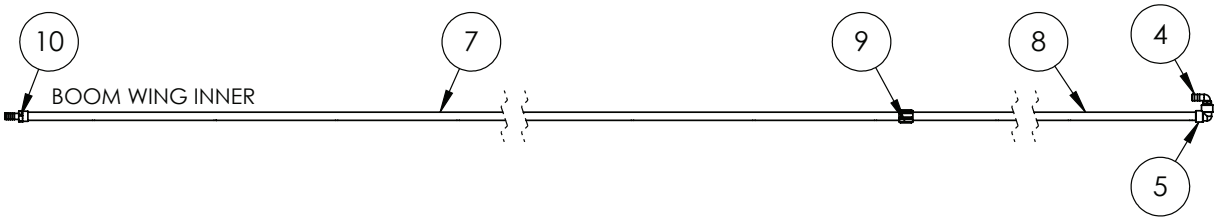

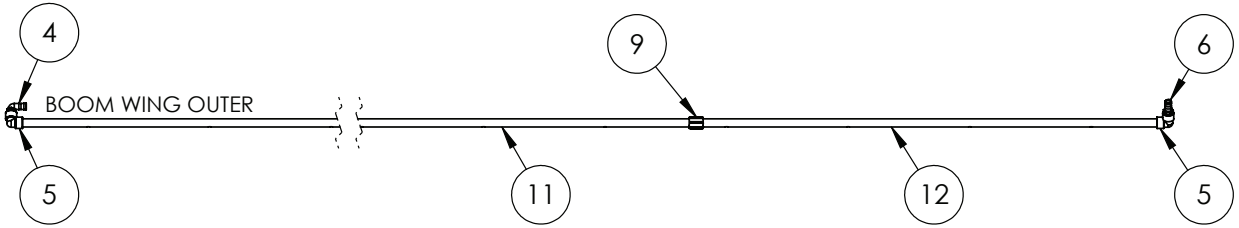

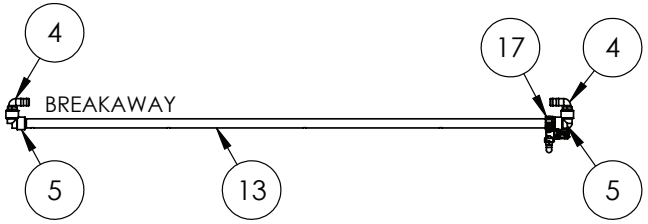

36M, TRITECH MY24, 500mm BROADACRE

IF DESCRIPTION PREFIX IS ASSEMBLY DRAWING ONLY OR PRODUCTION DRAWING ONLY THE ITEM IS NOT FOR SALE			
ITEM	PART NUMBER	DESCRIPTION	QTY
1	GA4952855	BOOM POLY DRILLED, 1", CENTRE SECTION RH, 500mm BROADACRE, TRITECH MY24	1
2	GA4952860	BOOM POLY DRILLED, 1", CENTRE SECTION LH, 500mm BROADACRE, TRITECH MY23	1
3	GA5078151	TEE, THREADED, 1" FEMALE, BANJO	1
4	GA5077723	HOSE BARB, ELBOW, 90 DEGREE, 1" MALE X 1" HOSE, BANJO	9
5	GA5077655	STREET ELBOW, 90 DEGREE, 1 FEMALE THREAD X 1 FEMALE THREAD, BANJO, EL100-90	12
6	GA5077718	HOSE BARB, STRAIGHT, 1 MALE THREAD X 1 HOSE, BANJO	4
7	GA4953360	BOOM POLY DRILLED, 1", 36m, LH & RH INNER SECTION A, 500mm BROADACRE, LF SPECIAL, TRITECH MY23	2
8	GA4953365	BOOM POLY DRILLED, 1", 36m, LH & RH INNER SECTION B, 500mm BROADACRE, LF SPECIAL, TRITECH MY23	2
9	GA5077638	COUPLING, SOCKET, 1 FEMALE THREAD, BANJO, CPLG100	4
10	GA5077747	HOSE BARB, STRAIGHT, 1 FEMALE THREAD X 1 HOSE, BANJO	2
11	GA4952820	BOOM POLY DRILLED, 1", 36m, LH & RH OUTER SECTION A, 500mm BROADACRE, TRITECH MY24	2
12	GA4952825	BOOM POLY DRILLED, 1", 36m, LH & RH OUTER SECTION B, 500mm BROADACRE, TRITECH MY24	2
13	GA4952835	BOOM POLY DRILLED, 1", 36m, 2m BREAKAWAY LH & RH, 500mm BROADACRE, TRITECH MY24	2
14	GA4950020	ASSEMBLY DRAWING ONLY, FENCE LINE JET, RH, 1", TRITECH	1
	GA4950015	ASSEMBLY DRAWING, ONLY, FENCE LINE JET, LH, 1", TRITECH	1
GA7500135 GOLDACRES		LAYOUT, BOOM SECTION PLUMBING, 10 SECTION, 36M, 500mm BROARDACRE, G4 S2, TRITECH MY24	REV 00

Boom Plumbing, 36mt, 500mm Rowcrop

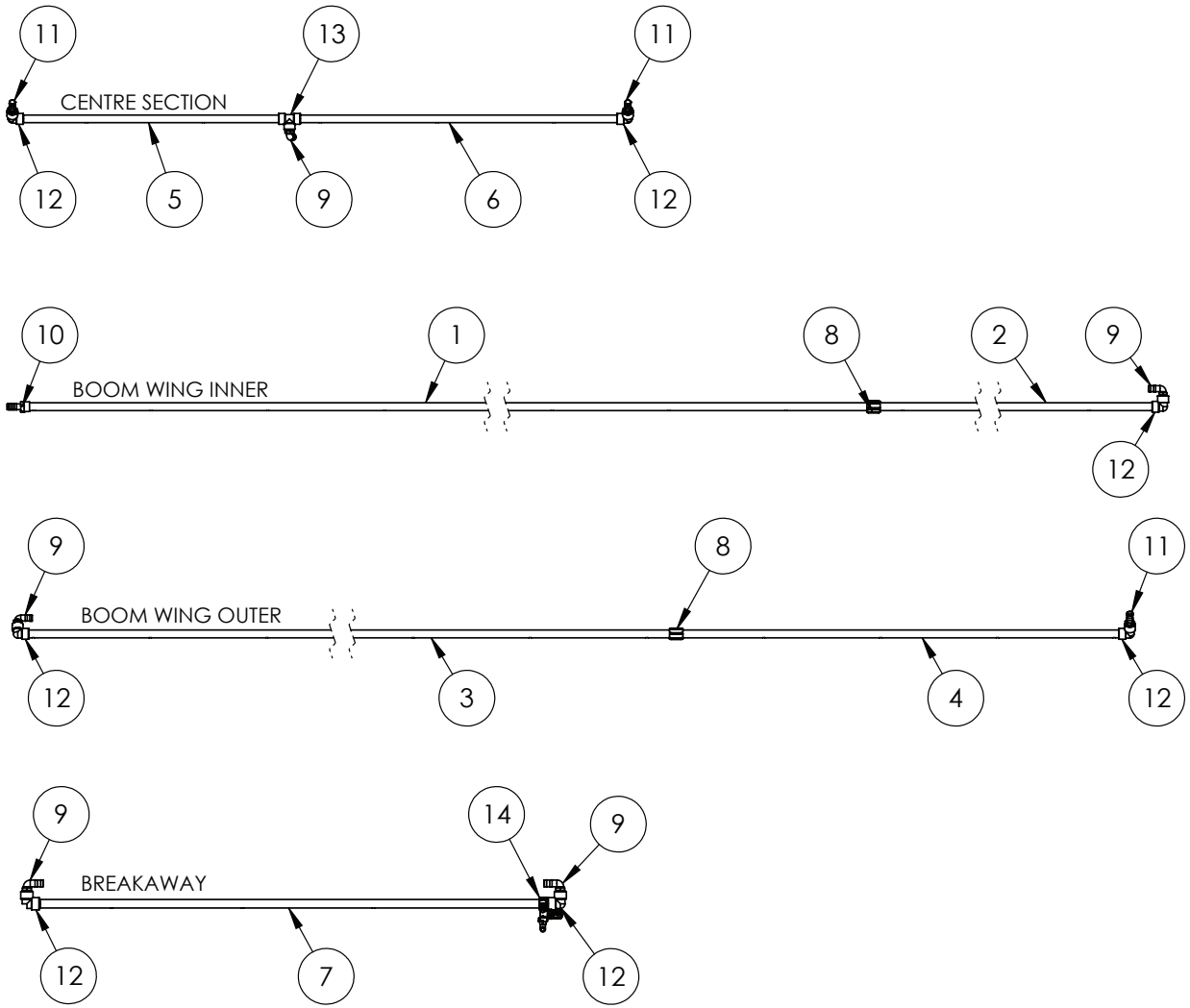

36M, TRITECH MY24, 500mm ROWCROP

IF DESCRIPTION PREFIX IS ASSEMBLY DRAWING ONLY OR PRODUCTION DRAWING ONLY THE ITEM IS NOT FOR SALE			
ITEM	PART NUMBER	DESCRIPTION	QTY
1	GA4952920	BOOM POLY DRILLED, 1", 36m, LH & RH INNER SECTION A, 500mm ROWCROP, TRITECH MY23	2
2	GA4952925	BOOM POLY DRILLED, 1", 36m, LH & RH INNER SECTION B, 500mm ROWCROP, TRITECH MY23	2
3	GA4952940	BOOM POLY DRILLED, 1", 36m, LH & RH OUTER SECTION A, 500mm ROWCROP, TRITECH MY24	2
4	GA4952945	BOOM POLY DRILLED, 1", 36m, LH & RH OUTER SECTION B, 500mm ROWCROP, TRITECH MY24	2
5	GA4952910	BOOM POLY DRILLED, 1", CENTRE SECTION LH, 500mm ROWCROP, TRITECH MY24	1
6	GA4952905	BOOM POLY DRILLED, 1", CENTRE SECTION RH, 500mm ROWCROP, TRITECH MY24	1
7	GA4952965	BOOM POLY DRILLED, 1", LH & RH 36m BREAKAWAY, 500mm ROWCROP, TRITECH MY24	2
8	GA5077638	COUPLING, SOCKET, 1 FEMALE THREAD, BANJO, CPLG100	4
9	GA5077723	HOSE BARB, ELBOW, 90 DEGREE, 1" MALE X 1" HOSE, BANJO	9
10	GA5077747	HOSE BARB, STRAIGHT, 1 FEMALE THREAD X 1 HOSE, BANJO	2
11	GA5077718	HOSE BARB, STRAIGHT, 1 MALE THREAD X 1 HOSE, BANJO	4
12	GA5077655	STREET ELBOW, 90 DEGREE, 1 FEMALE THREAD X 1 FEMALE THREAD, BANJO, EL100-90	12
13	GA5078151	TEE, THREADED, 1" FEMALE, BANJO	1
14	GA4950020	ASSEMBLY DRAWING ONLY, FENCE LINE JET, RH, 1", TRITECH	1
	GA4950015	ASSEMBLY DRAWING ONLY, FENCE LINE JET, LH, 1", TRITECH	1
GA7500139 GOLDACRES		LAYOUT, BOOM SECTION PLUMBING, 10 SECTION, 36M, 500mm ROWCROP, G4 SERIES 2, TRITECH MY24	REV 00

08 - Decals

Decal Base Kit, GA8701904 (Continued Over Page)

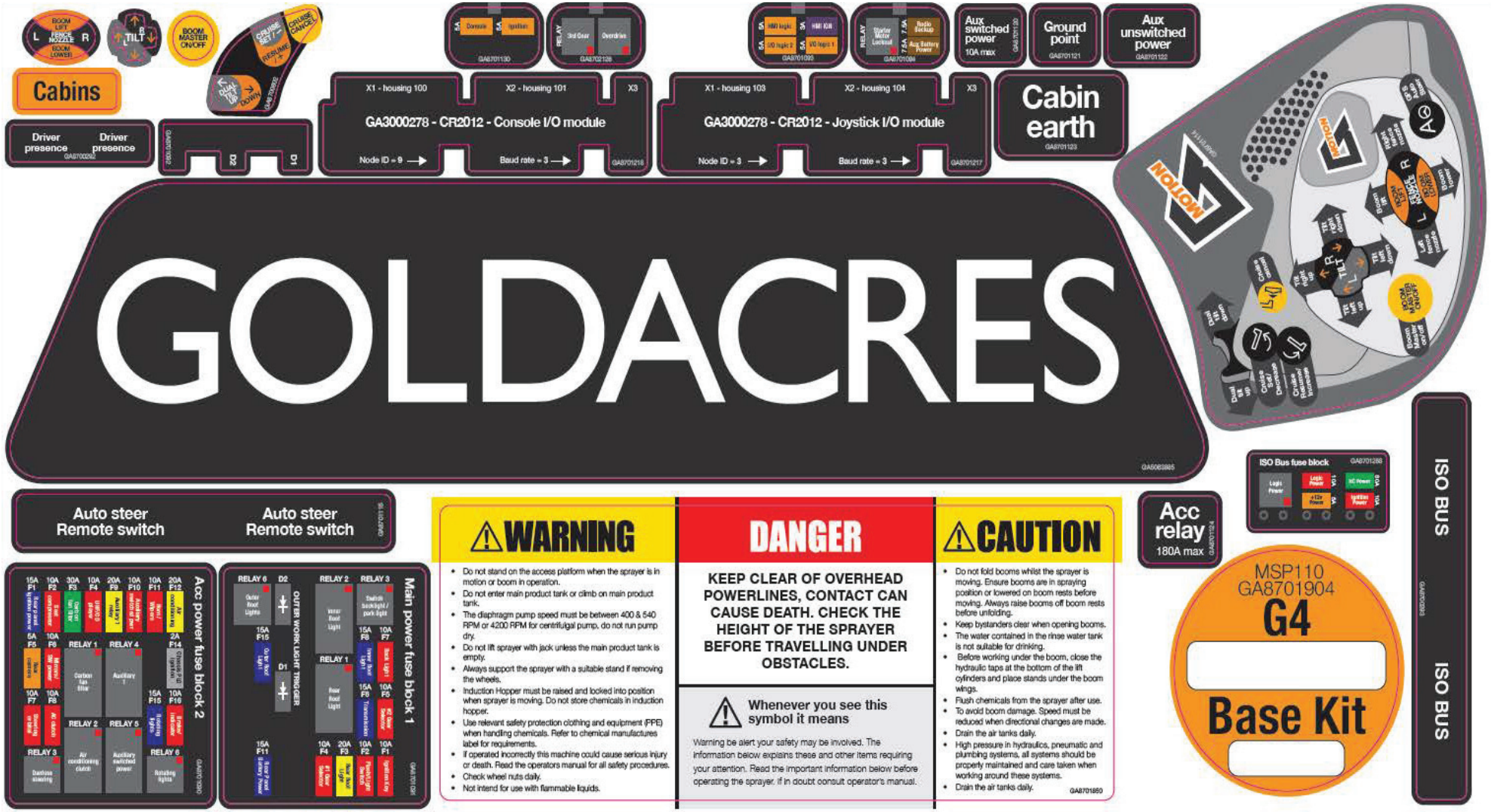

Decal Base Kit, GA8701904 (Continued Over Page)

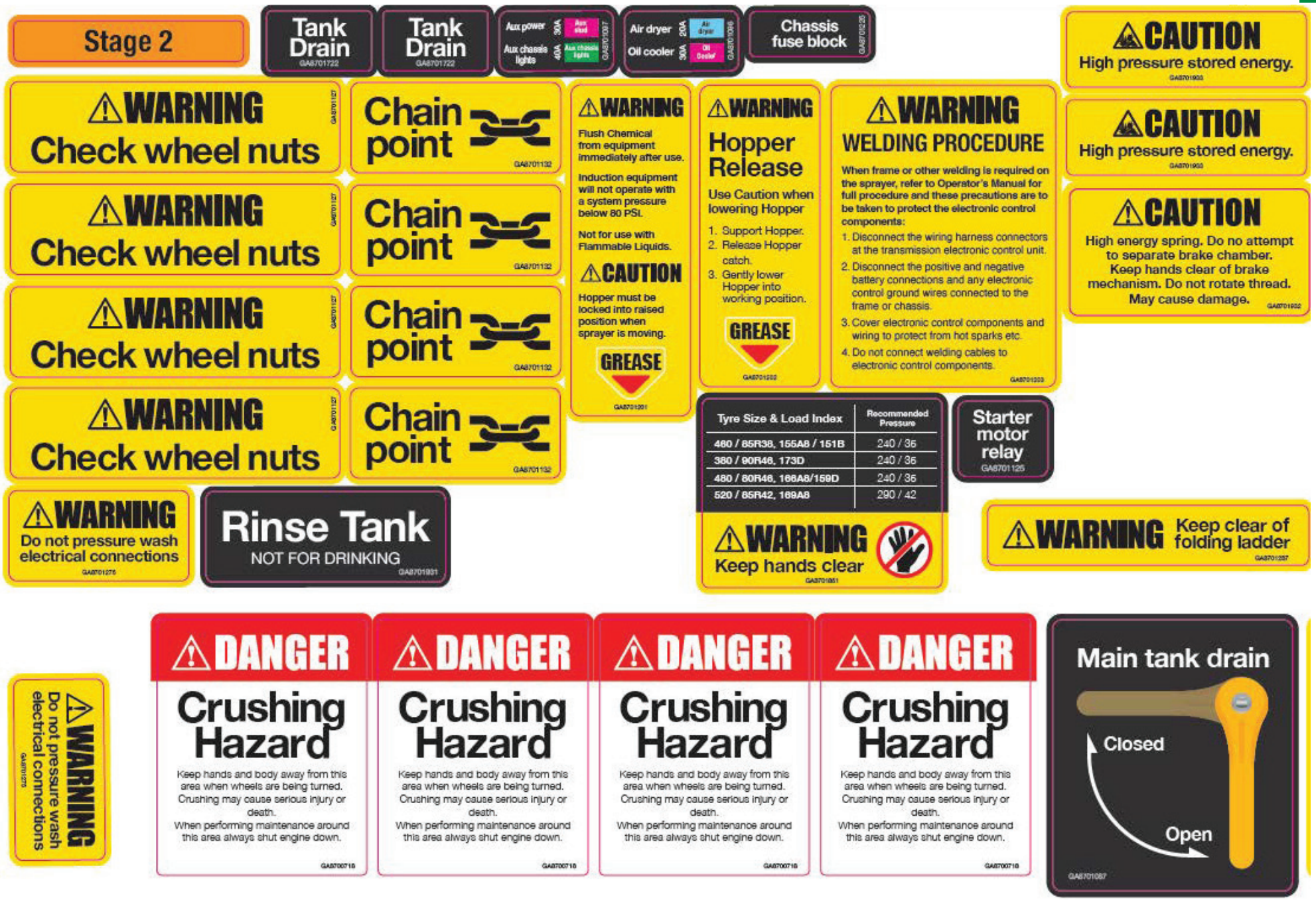

Decal Base Kit, GA8701904

Decal Kit, Fill Station, GA8701903

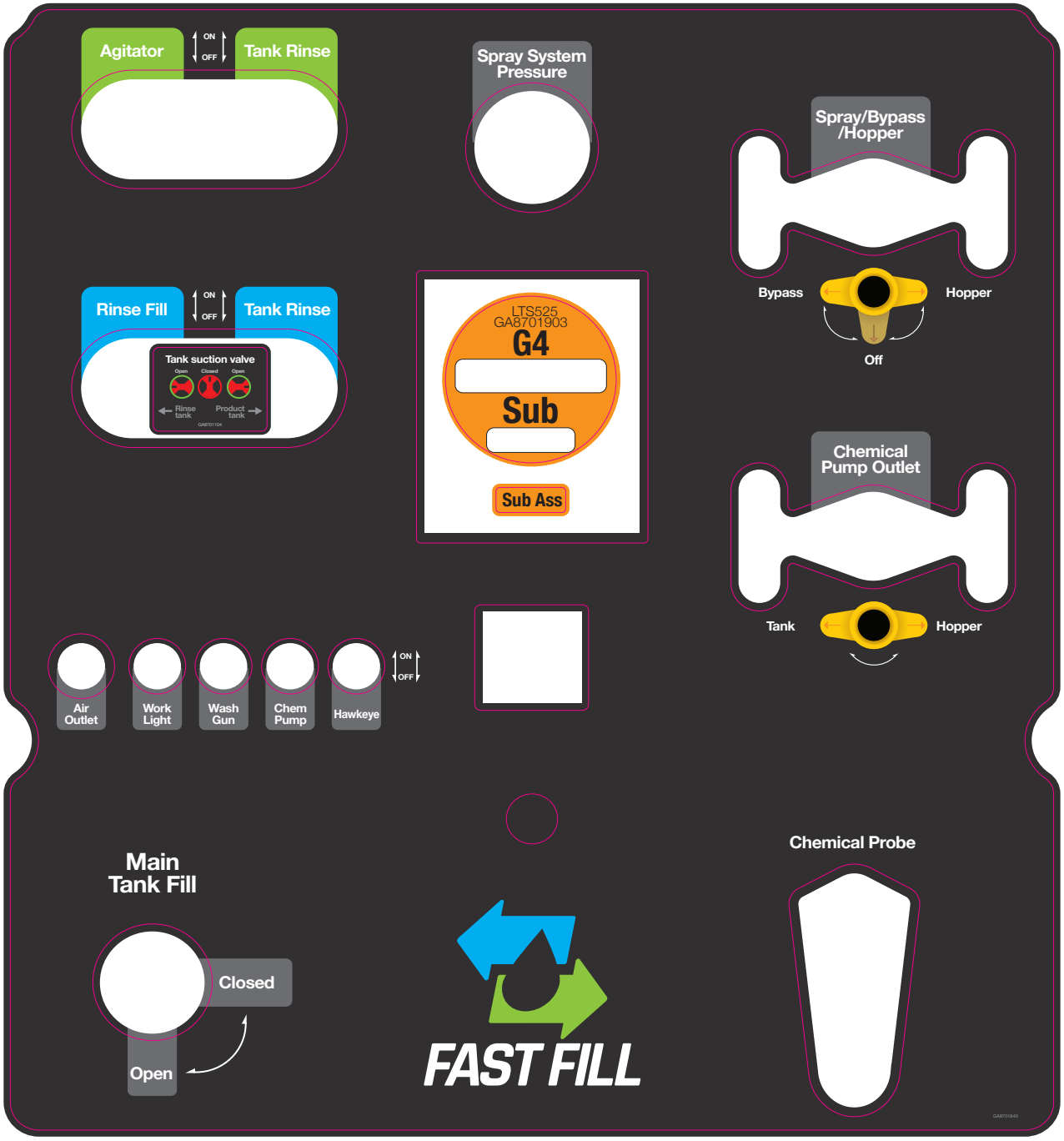

Decal Kit, Centre Section, GA8701905

Decal, Bonnet Kit, GA8701906 & Boom QC Kit, GA8701907

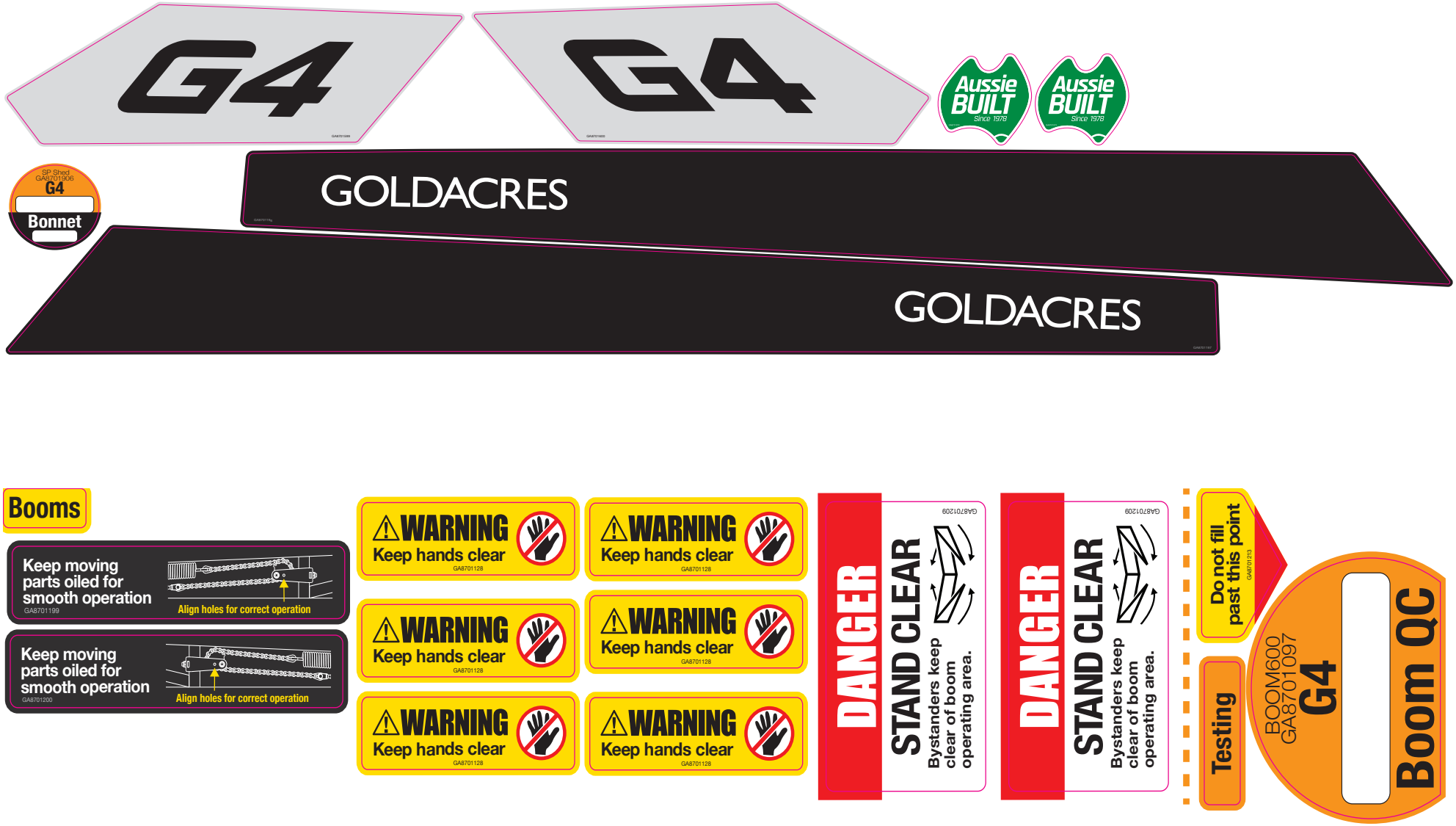

Decal Kits, Tank, 24mt & 28mt Kits

GOLDACRES
G4·30
Trailed Shed
GA6701910
G4
G430
GOLDACRES
G4·30

GOLDACRES
G4·36
Trailed Shed
GA6701911
G4
G436
GOLDACRES
G4·36

Decal Kit, Weed Detect, GA8701690

09 - Electrical

Electrical, Lighting - Boom Tip LED's, Tri-Tech Boom

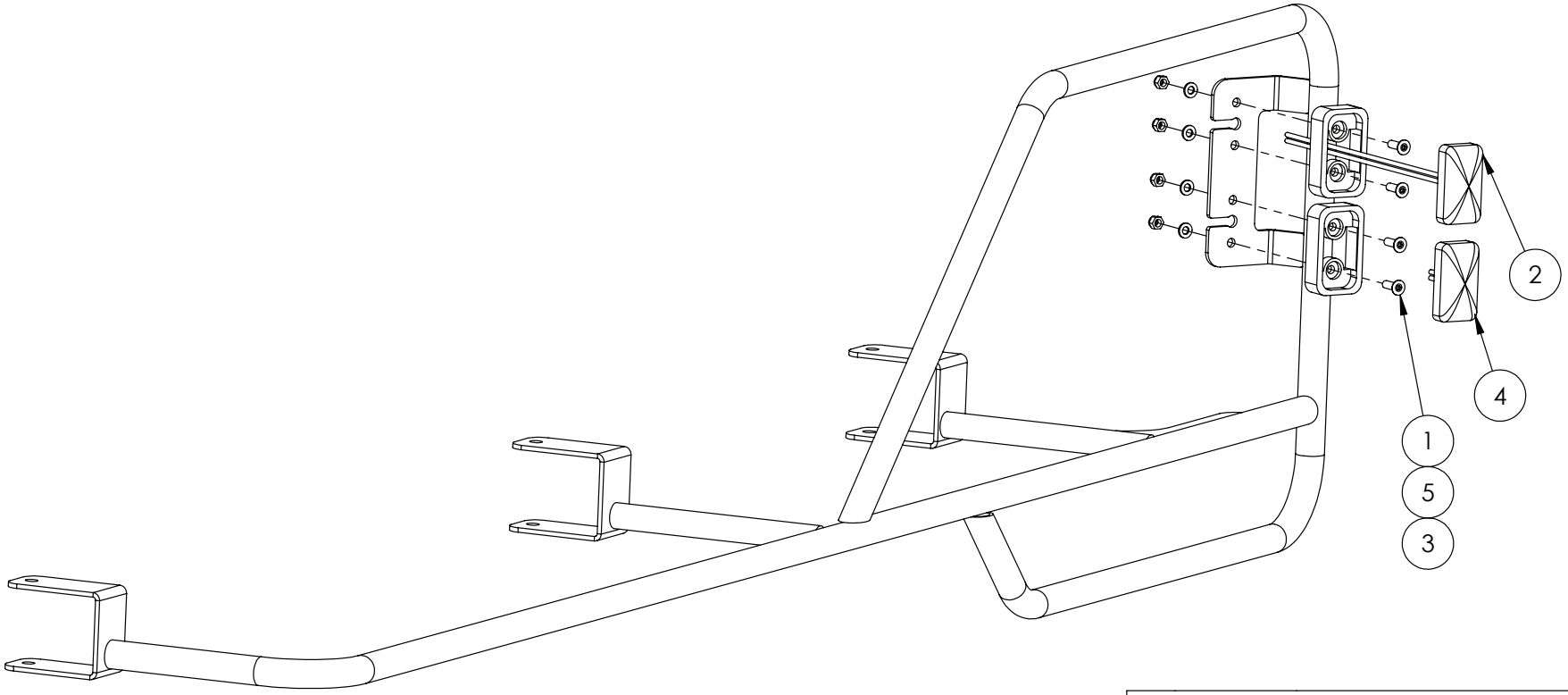

IF DESCRIPTION PREFIX IS ASSEMBLY DRAWING ONLY OR PRODUCTION DRAWING ONLY THE ITEM IS NOT FOR SALE			
ITEM	PART NUMBER	DESCRIPTION	QTY
1	GA5051230	CSCS M5 X 16 SS A2-70	4
2	GA5051345	LIGHT BOOM CLEARANCE LED (ORANGE)	1
3	GA5003974	NUT M5 NYLOC ZP	4
4	GA5075155	RED LED FENCE LINE JET CLEARANCE LIGHT (35RM)	1
5	GA5003983	WASHER 5mm FLAT SS	4
GA7800041 GOLDACRES		BREAKAWAY TIP LIGHITNG, LED's	REV

Electrical Component Assembly, Power Module, Relay & Fuse

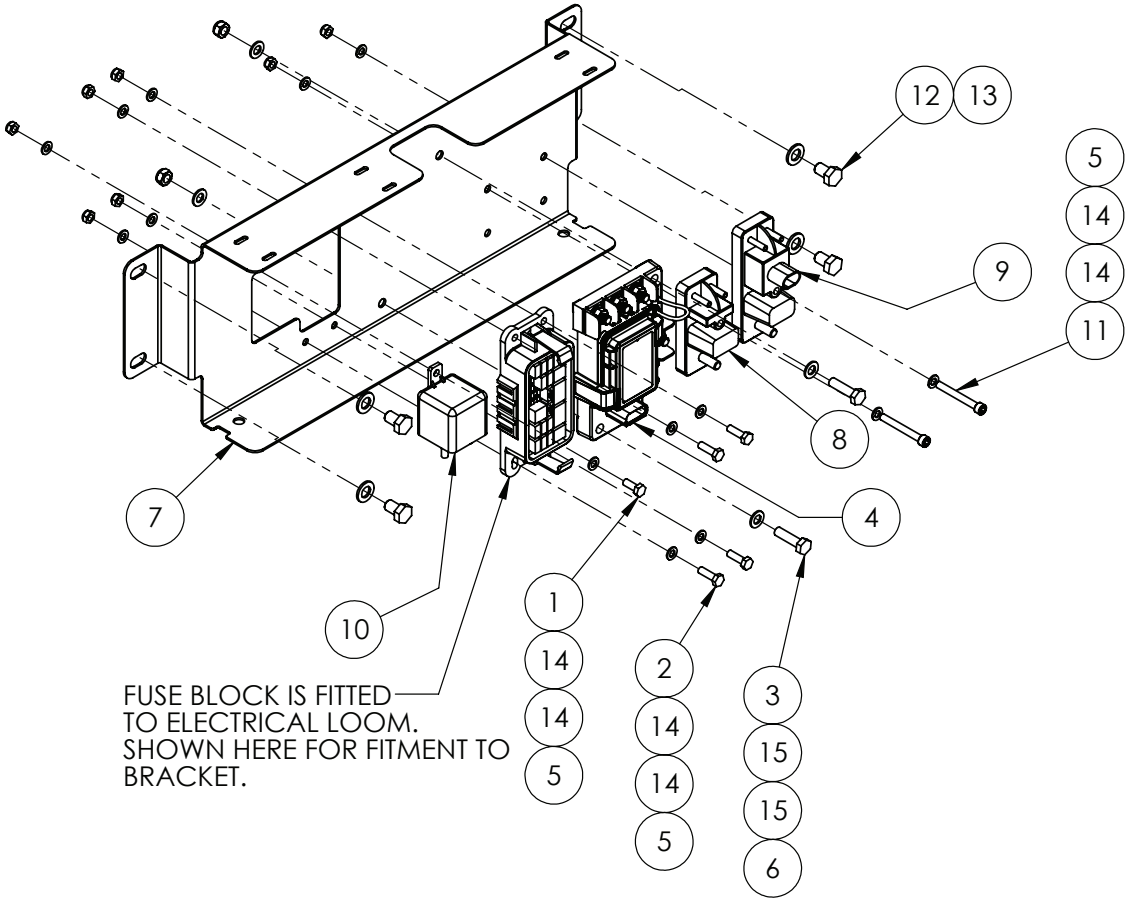

IF DESCRIPTION PREFIX IS ASSEMBLY DRAWING ONLY OR PRODUCTION DRAWING ONLY THE ITEM IS NOT FOR SALE			
ITEM	PART NUMBER	DESCRIPTION	QTY
1	GA5004041	BOLT M6 X 16 GR8.8 ZP	1
2	GA5004065	BOLT M6 X 20 GR8.8 ZP	4
3	GA5011475	BOLT M8 X 30 GR8.8 ZP	2
4	GA3000288	FUSE BOX, PDM, 3 MIDI, 4 BLADE FUSE. LITTELFUSE	1
5	GA5048115	NUT M6 NYLOC ZP	7
6	GA5004917	NUT M8 NYLOC ZP	2
7	GA4414265	PLATE, BRACKET, ELECTRICAL COMPONENTS, G4, S2	1
8	GA3000435	POWER MODULE, FUSED, PDM,	1
9	GA3000331	POWER RELAY MODULE, FUSED, PDM,	1
10	GA5048640	RELAY, 12V, 180 AMP PEAK, 100 AMP CONTINUOUS, 4 PIN, NORMALLY OPEN	1
11	GA5011421	SHCS M6 X 50 GR12.9 ZP	2
12	GA5006143	SET SCREW M10 X 16 GR8.8 ZP	4
13	GA5000117	WASHER 10mm FLAT SS HD	4
14	GA5004437	WASHER 6mm FLAT SS	14
15	GA5003651	WASHER 8mm FLAT SS	4
GA4914330 GOLDACRES		PRODUCTION DRAWING ONLY, ELECTRICAL COMPONENT ASSEMBLY, G4, S2	REV 01.A

Plate Cover, Power Module

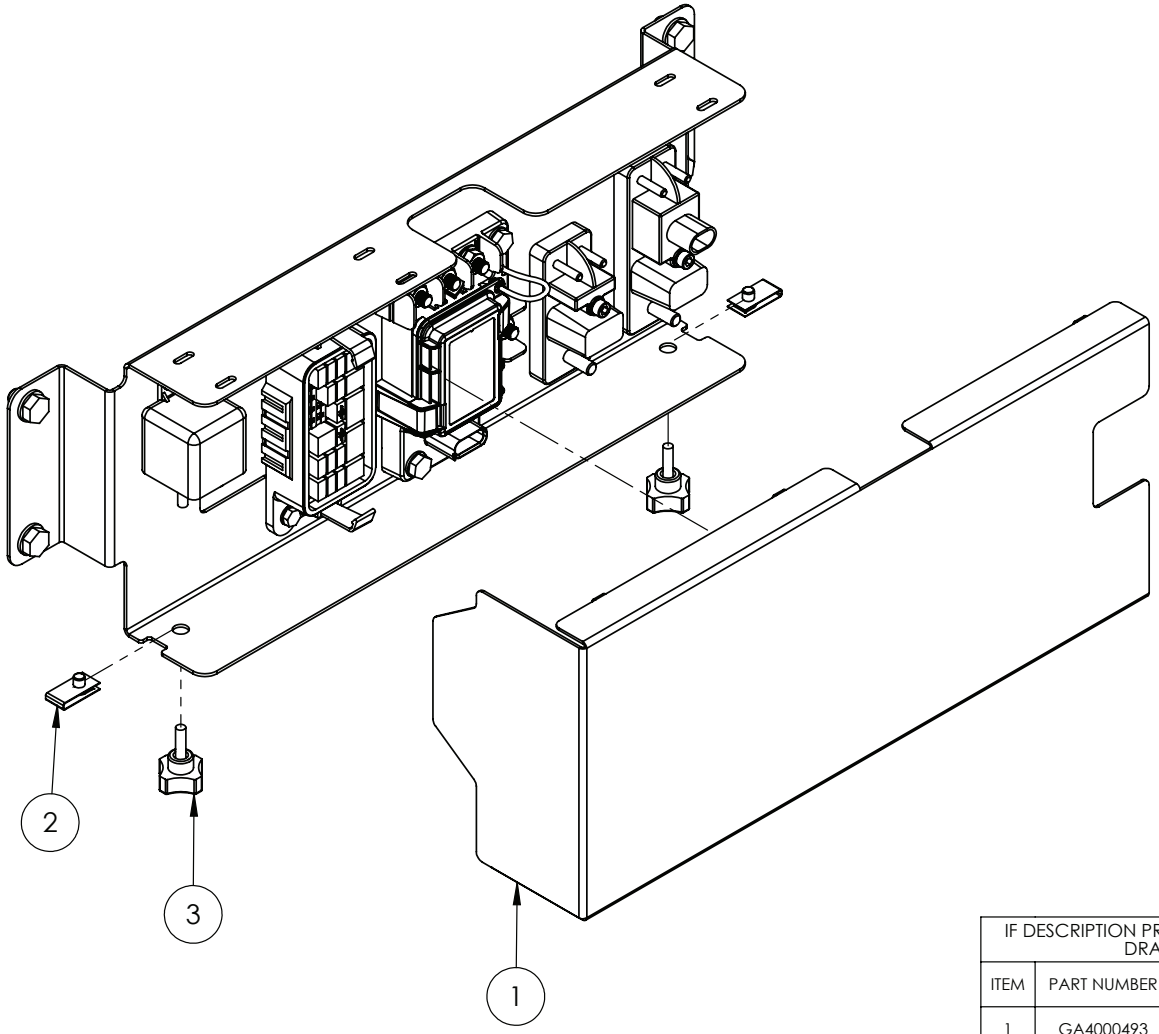

IF DESCRIPTION PREFIX IS ASSEMBLY DRAWING ONLY OR PRODUCTION DRAWING ONLY THE ITEM IS NOT FOR SALE			
ITEM	PART NUMBER	DESCRIPTION	QTY
1	GA4000493	PLATE, COVER ELECTRICAL COMPONENTS, G4, S2	1
2	GA5066830	SPEED CLIP M6	2
3	GA5069965	STAR KNOB 40 OD M6 X 20	2
GA4914330 GOLDACRES		PRODUCTION DRAWING ONLY, ELECTRICAL COMPONENT ASSEMBLY, G4, S2	REV 01.A

Beacon, LED

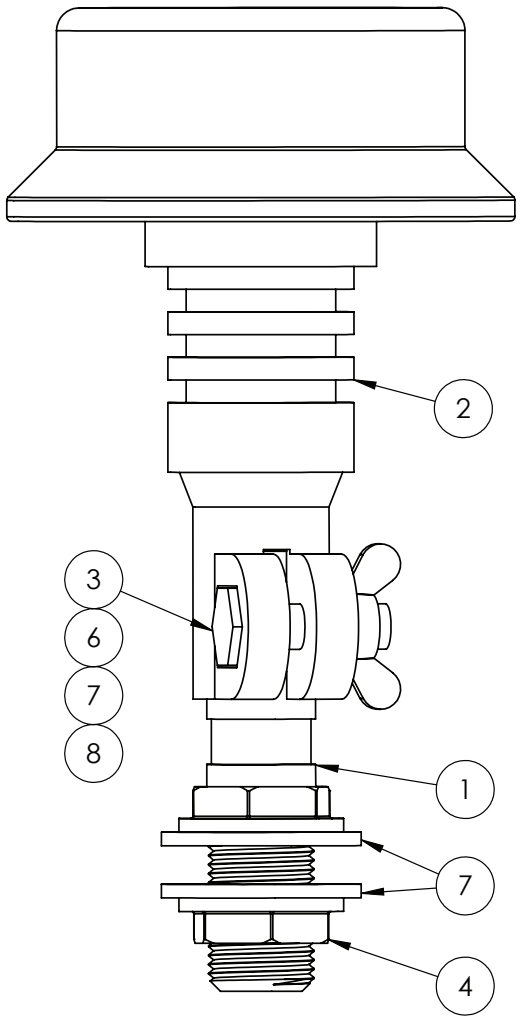

IF DESCRIPTION PREFIX IS ASSEMBLY DRAWING ONLY OR PRODUCTION DRAWING ONLY THE ITEM IS NOT FOR SALE			
ITEM	PART NUMBER	DESCRIPTION	QTY
1	GA5020411	BEACON MOUNT SCREW ON	1
2	GA5048976	BEACON, LED, AMBER, DIN A POLE MOUNT, FLEXIBLE	1
3	GA5006071	BOLT M10 X 40 GR10.9 ZP	1
4	NUT	NUT SUPPLIED WITH BEACON POST	2
5	GA5000127	NUT M10 WING NUT ZP	1
6	GA5000137	WASHER 10mm SPRING SS	1
7	GA5001891	WASHER 24mm FLAT HD SS	2
8	GA5000117	WASHER M10 FLAT SS HD	1
GA7800248 GOLDACRES		ASSEMBLY DRAWING ONLY, BEACON, LED, AMBER WITH INSERT SCREW	REV

Tail Light

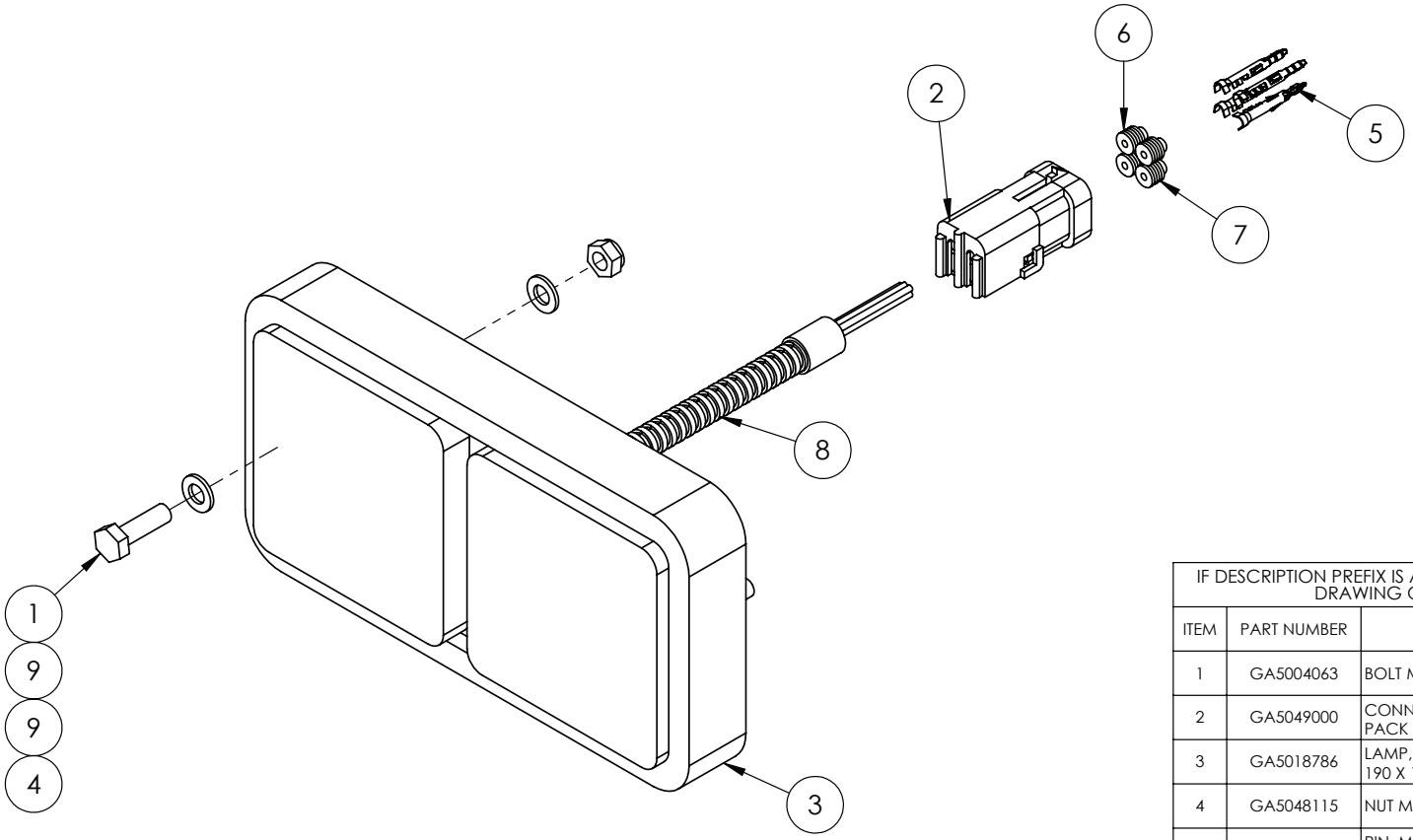

IF DESCRIPTION PREFIX IS ASSEMBLY DRAWING ONLY OR PRODUCTION DRAWING ONLY THE ITEM IS NOT FOR SALE			
ITEM	PART NUMBER	DESCRIPTION	QTY
1	GA5004063	BOLT M6 X 20 SS A-70	2
2	GA5049000	CONNECTOR, FEMALE, 4 PIN, SQUARE, WEATHER PACK	1
3	GA5018786	LAMP, LED, 12V, BRAKE / TAIL LIGHT / INDICATOR, 190 X 100	1
4	GA5048115	NUT M6 NYLOC ZP	2
5	GA5016617	PIN, MALE, SEALED, WEATHER PACK, WIRE 1.0 - 2.0mm	4
6	GA5014855	SEAL FOR WEATHER PACK CONNECTORS (BLUE)	1
7	GA5014857	SEAL FOR WEATHER PACK CONNECTORS (GREEN)	3
8	GA5012161	SPLIT TUBING, 7mm, NARVA, GA5012161 CUT TO FIT	1
9	GA5004437	WASHER 6mm FLAT SS	4
GA3000249 GOLDACRES		LED TAIL LIGHT, LARGE WITH CONNECTOR	REV 00

POD, Work Light

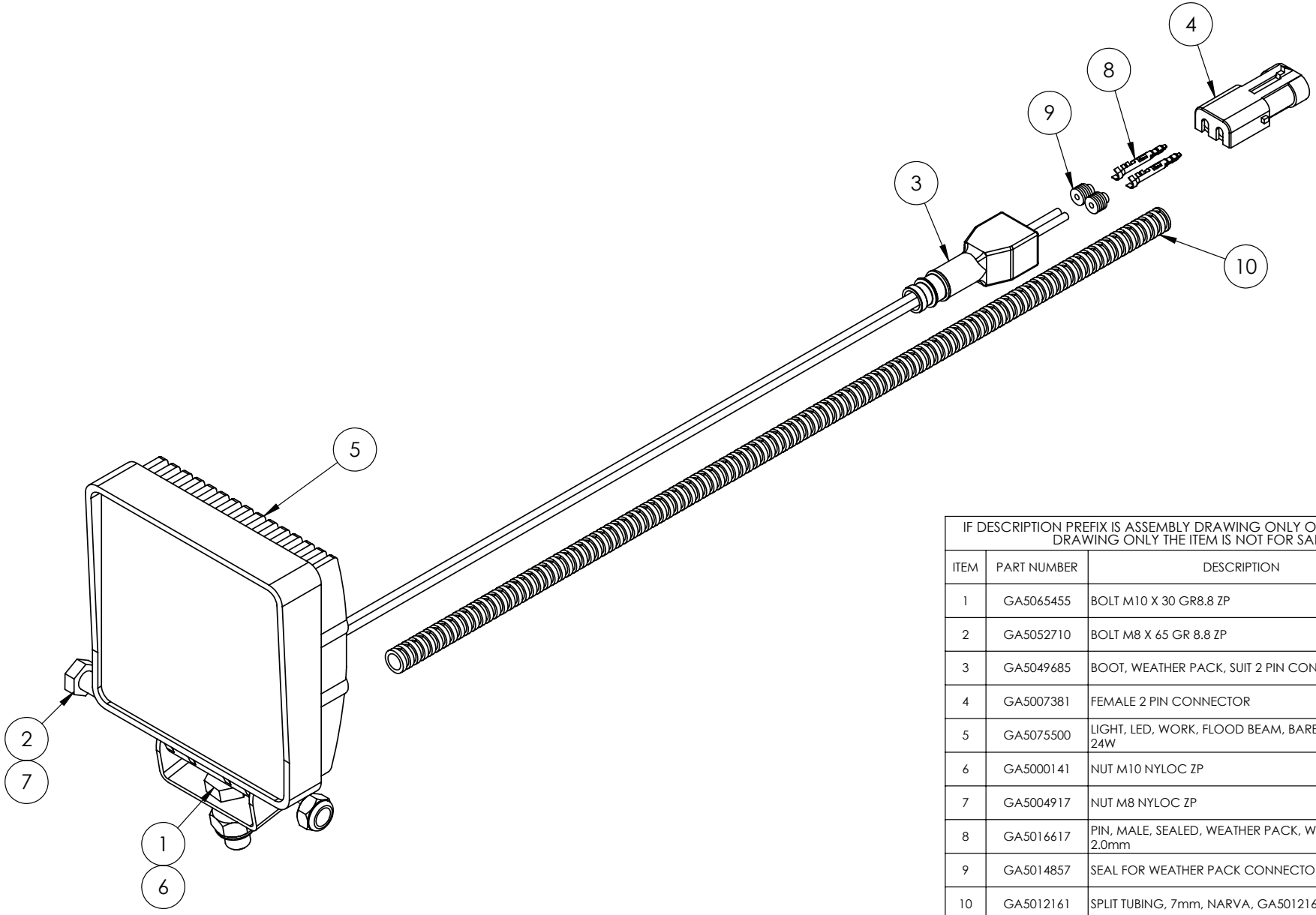

IF DESCRIPTION PREFIX IS ASSEMBLY DRAWING ONLY OR PRODUCTION DRAWING ONLY THE ITEM IS NOT FOR SALE			
ITEM	PART NUMBER	DESCRIPTION	QTY
1	GA5065455	BOLT M10 X 30 GR8.8 ZP	1
2	GA5052710	BOLT M8 X 65 GR 8.8 ZP	1
3	GA5049685	BOOT, WEATHER PACK, SUIT 2 PIN CONNECTOR	1
4	GA5007381	FEMALE 2 PIN CONNECTOR	1
5	GA5075500	LIGHT, LED, WORK, FLOOD BEAM, BARE WIRES, 12V, 24W	1
6	GA5000141	NUT M10 NYLOC ZP	1
7	GA5004917	NUT M8 NYLOC ZP	1
8	GA5016617	PIN, MALE, SEALED, WEATHER PACK, WIRE 1.0 - 2.0mm	2
9	GA5014857	SEAL FOR WEATHER PACK CONNECTORS (GREEN)	2
10	GA5012161	SPLIT TUBING, 7mm, NARVA, GA5012161 CUT TO FIT	1
GA4913495 GOLDACRES		LIGHT, POD WORK LIGHT ASSEMBLY, LED, FLOOD BEAM	REV 02

Light, LED, Blue, Spot Beam

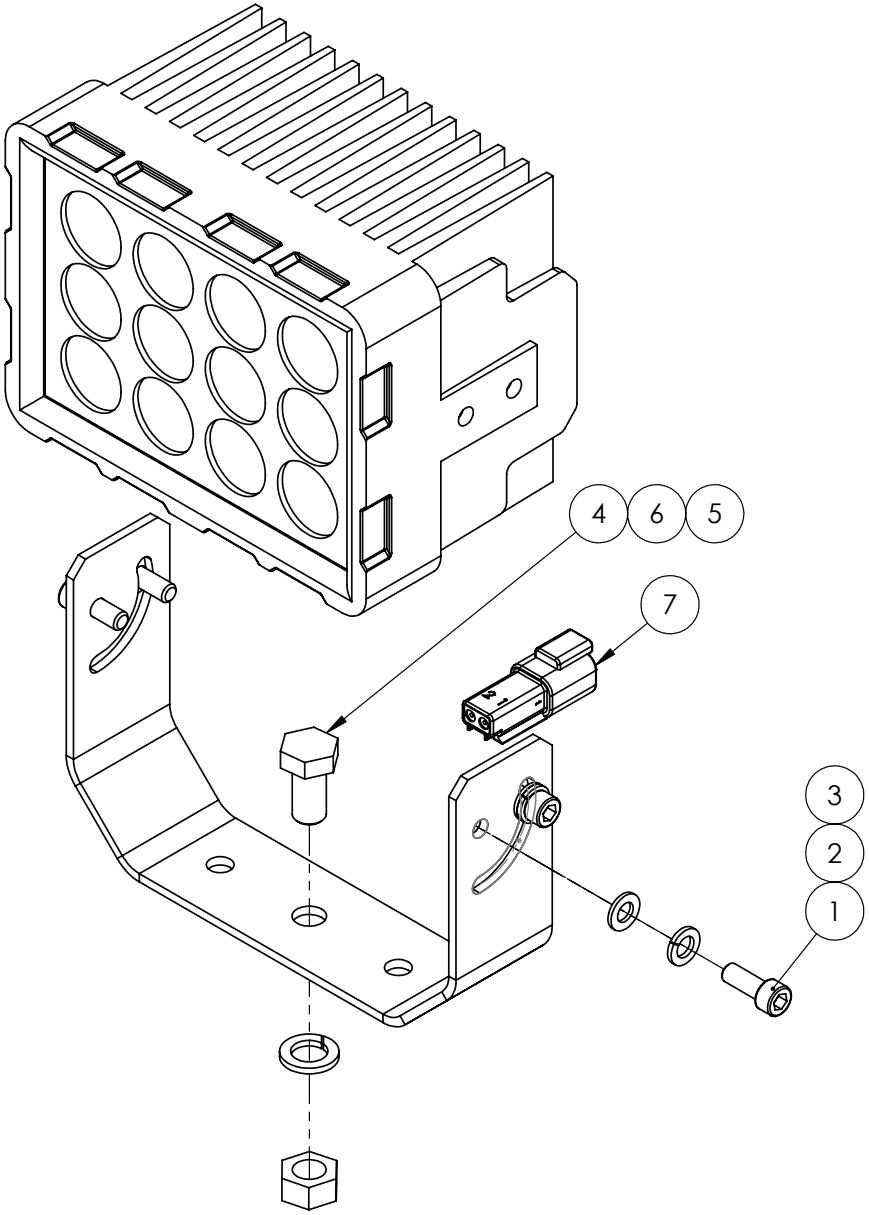

IF DESCRIPTION PREFIX IS ASSEMBLY DRAWING ONLY OR PRODUCTION DRAWING ONLY THE ITEM IS NOT FOR SALE			
ITEM	PART NUMBER	DESCRIPTION	QTY
1	GA5004049	SHCS M6 X 16 GR12.9 ZP	4
2	GA5004447	WASHER 6mm SPRING SS	4
3	GA5004437	WASHER 6mm FLAT SS	4
4	GA5006113	BOLT M10 X 20 GR8.8 ZP	1
5	GA5012459	NUT M10 HEX ZP	1
6	GA5000137	WASHER 10mm SPRING SS	1
7	GA5052830	RECEPTACLE, 2 WAY, PINS, DT SERIES, DEUTSCH, DT04-2P	1
GA3000333 GOLDACRES		LIGHT, LED, BLUE, SPOT BEAM, 60 WATT, GLASS FRONT	REV

ISO, Electrical Connectors

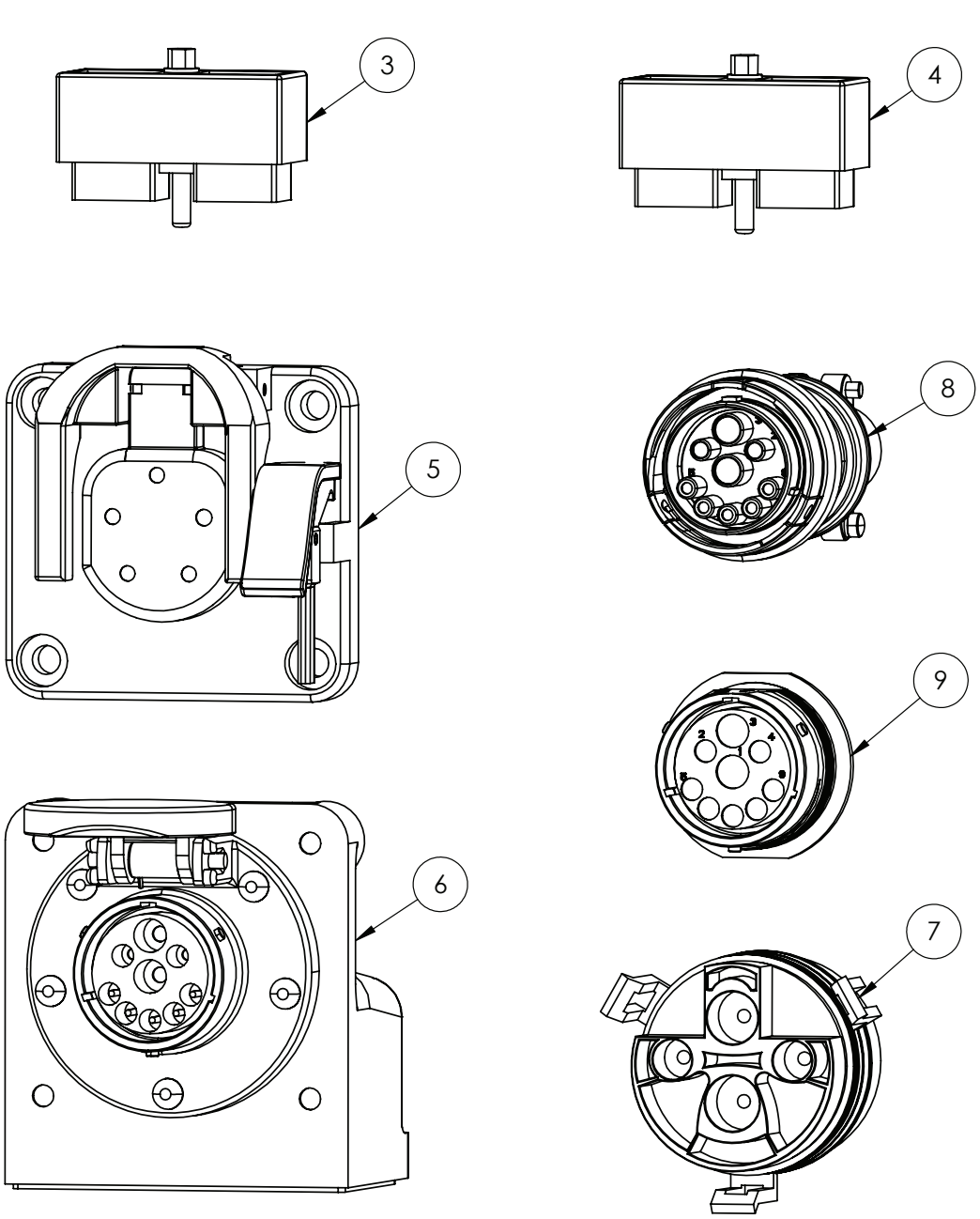

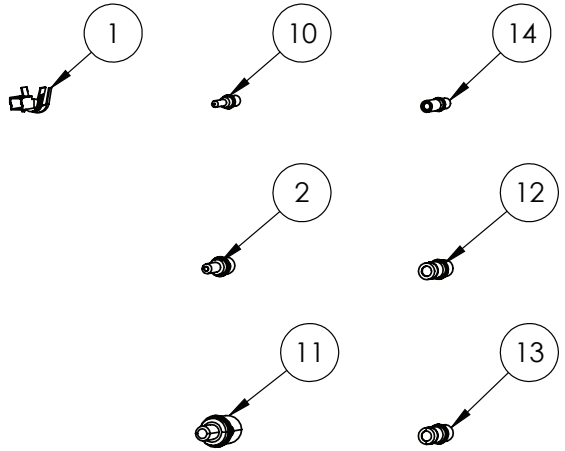

IF DESCRIPTION PREFIX IS ASSEMBLY DRAWING ONLY OR PRODUCTION DRAWING ONLY THE ITEM IS NOT FOR SALE			
ITEM	PART NUMBER	DESCRIPTION	QTY
1	GA5061370	CINCH TERMINAL FEMALE 16-18AWG, 425-00-00-873	1
2	GA5061260	CONNECTOR, DEUTSCH, CONTACT, PIN, SOLID, AWG 12-14, NICKEL	1
3	GA3001152	ELECTRICAL CONNECTOR, CINCH, 30 WAY, A-K, SUIT PC1 ISO NODE, 581-01-30-029	1
4	GA3001153	ELECTRICAL CONNECTOR, CINCH, 30 WAY, L-Y, SUIT PC1 ISO NODE, 581-01-30-028	1
5	GA3000872	ELECTRICAL CONNECTOR, ISO BUS, 11783-2, 9 PIN, BOX, IBBC BREAKAWAY 408-4002-131	1
6	GA3000874	ELECTRICAL CONNECTOR, ISO BUS, 11783-2, 9 PIN, BOX, JD STYLE, IBBC HDBOX-24-91PN	1
7	GA3000873	ELECTRICAL CONNECTOR, ISO BUS, 4P PLUG IBRC SUIT GA3000872, 408-4002-132	1
8	GA3000870	ELECTRICAL CONNECTOR, ISO BUS, 9 PIN, HDB36-24-91SE-059	1
9	GA3000875	ELECTRICAL CONNECTOR, ISO BUS, 9 PIN, CABLE MOUNT HD34-24-91PN	1
10	GA5061220	PIN, MALE, GOLD, NUMBER 16, DEUTSCH	1
11	GA3000876	PIN, MALE, SOLID, NICKEL, NUMBER 8, DEUTSCH, 0460-204-08141	1
12	GA3000877	SOCKET, FEMALE, SOLID, NICKEL, NUMBER 12, DEUTSCH	1
13	GA3000877	SOCKET, FEMALE, SOLID, NICKEL, NUMBER 8, DEUTSCH, 0462-203-08141	1
14	GA5061225	SOCKET, FEMALE, SOLID GOLD, NUMBER 16, DEUTSCH	1
GA7800082 GOLDACRES		ELECTRICAL CONNECTORS, ISO BUS, DEUTSCH + RAVEN	REV 00

Raven, RCM & XRT Plugs

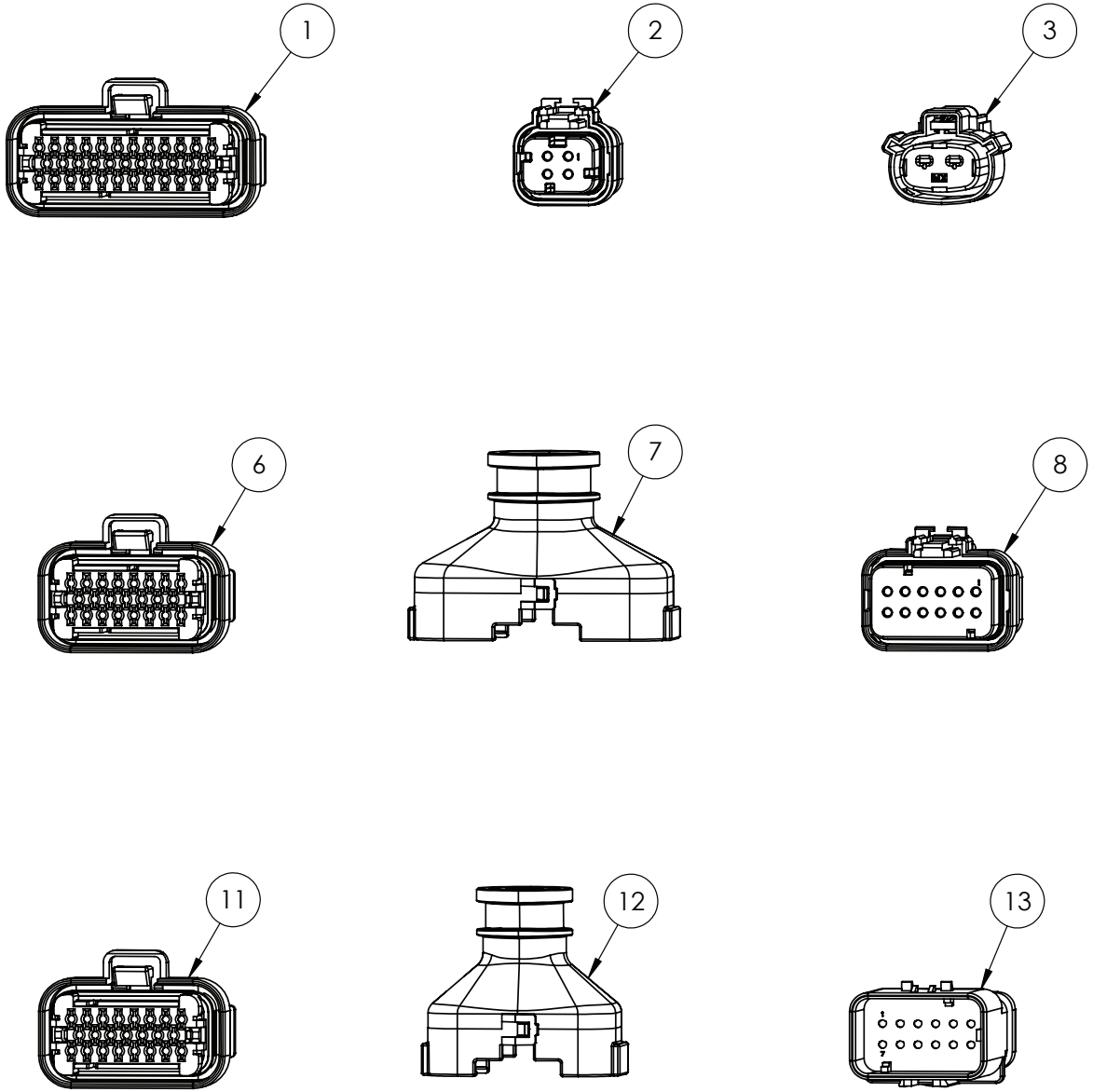

IF DESCRIPTION PREFIX IS ASSEMBLY DRAWING ONLY OR PRODUCTION DRAWING ONLY THE ITEM IS NOT FOR SALE			
ITEM	PART NUMBER	DESCRIPTION	QTY
1	GA3001135	ELECTRICAL CONNECTOR, 35 PIN PLUG, BLACK, AMPSEAL, 776164-1	1
2	GA3000839	ELECTRICAL CONNECTOR, 4 SOCKET, RED PLUG, 18-14 AWG, AMPSEAL 16, 776524-1	1
3	GA3001141	ELECTRICAL CONNECTOR, 2 PIN RECEPTACLE, MOLEX 19432-0013, SUIT 19434-0003 SOCKETS	1
4	GA3001142	ELECTRICAL CONNECTOR, 2 PIN PLUG, MOLEX 19433-0013, SUIT 19431-0001 PINS	1
5	GA3000840	ELECTRICAL CONNECTOR, 4 PIN, RED INTERNAL RECEPTACLE, 18-14 AWG, AMPSEAL 16, 776488-1	1
6	GA3001136	ELECTRICAL CONNECTOR, 23 PIN PLUG, BLACK, AMPSEAL, 770680-1	1
7	GA3001417	ELECTRICAL CONNECTOR, BACKSHELL, AMPSEAL, 35 POSITION, 2389807-1, 2 PER CONNECTOR	1
8	GA3001140	ELECTRICAL CONNECTOR, 12 PIN PLUG, AMPSEAL 16, SUIT DEUTSCH 16 SOCKETS, 776437-1	1
9	GA3001143	ELECTRICAL TERMINAL CONNECTOR, FEMALE, MX150L, MOLEX, 19434-0003	1
10	GA3001138	ELECTRICAL CONTACT, AMPSEAL GOLD SOCKET, 16-20 AWG, LOOSE PIECE, 770854-3	1
11	GA3001137	ELECTRICAL CONNECTOR, 23 PIN PLUG, GREY, AMPSEAL, 770680-4	1
12	GA3001416	ELECTRICAL CONNECTOR, BACKSHELL, AMPSEAL, 23 POSITION, 2389806-1, 2 PER CONNECTOR	1
13	GA3001139	ELECTRICAL CONNECTOR, 12 PIN RECEPTACLE, AMPSEAL 16, SUIT DEUTSCH 16 PINS, 776438-1	1
GA7800256 GOLDACRES		ELECTRICAL CONNECTORS, RAVEN HARNESS, AMPSEAL, MOLEX, PARTS DRAWING	REV 00.D

Raven, AMP Plugs

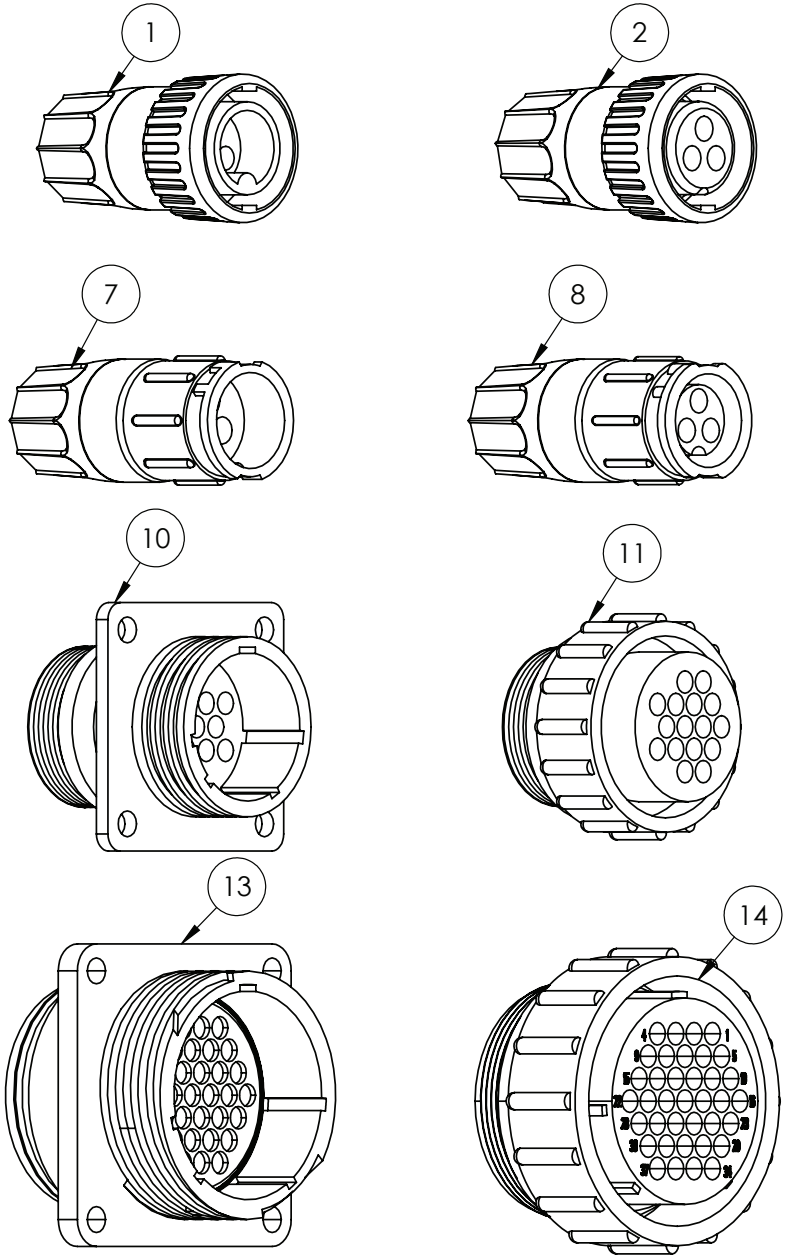

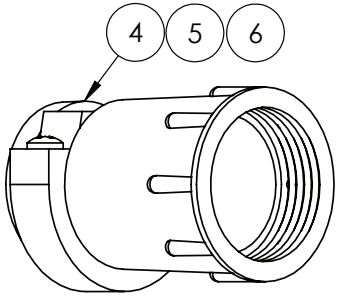

IF DESCRIPTION PREFIX IS ASSEMBLY DRAWING ONLY OR PRODUCTION DRAWING ONLY THE ITEM IS NOT FOR SALE			
ITEM	PART NUMBER	DESCRIPTION	QTY
1	GA5076920	CONNECTOR, 3 PIN KIT, SPEED SENSOR, INCLUDING MALE PINS, RAVEN, 4084001010	1
2	GA5076922	CONNECTOR, 3 PIN KIT, FLOW METER, INCLUDING FEMALE PINS, RAVEN	1
3	GA5076927	RAVEN MALE SPEED SENSOR/FLOW METER PIN	1
4	GA5049175	CONNECTOR, BACKING SHELL, SUIT 16 PIN AMP, RAVEN, 206322	1
5	GA5020560	CONNECTOR, BACKING SHELL 23, SUIT 37 PIN AMP, STANDARD SIZE	1
6	GA5020559	CONNECTOR, BACKING SHELL 23, SUIT 37 PIN AMP, LARGE SIZE	1
7	GA5076921	CONNECTOR, 3 PIN KIT, FLOW METER, INCLUDING MALE PINS, RAVEN	1
8	GA5076923	CONNECTOR, 3 PIN KIT, SPEED SENSOR, INCLUDING FEMALE PINS, RAVEN	1
9	GA5076928	RAVEN FEMALE PIN SPEED SENSOR/ FLOW METER	1
10	GA5076924	CONNECTOR, 16 PIN AMP, SQUARE FLANGE, SUIT MALE PINS, RAVEN, 4084001017, 206036-1	1
11	GA5076925	CONNECTOR, 16 PIN AMP, SUIT FEMALE PINS, RAVEN, 4084001018, 206037-1	1
12	GA5048905	PIN, 14-18 GAUGE GOLD, MALE, SUIT 16 PIN AMP, 4084001162	1
13	GA5020780	CONNECTOR, 37 PIN AMP, FEMALE	1
14	GA5020785	CONNECTOR, 37 PIN AMP, MALE, RAVEN	1
15	GA5048900	PIN, 14-18 GAUGE GOLD, FEMALE, SUIT 16 PIN AMP, 4084001163	1
-	GA5020561	CONNECTOR DUST CAP, 37 PIN AMP, MALE, RAVEN	-
-	GA5075848	DUST CAP, 16 PIN AMP CONNECTOR, FEMALE, 10630171042-E	-
-	GA5020575	DUST CAP, 16 PIN AMP CONNECTOR, MALE	-
-	GA5075927	DUST CAP 37 PIN SERIES 23 (4000 SERIES CONNECTOR DUST CAP, 37 PIN AMP, SERIES 23, RAVEN, 10630172526-B	-
GA7800040 GOLDACRES		PARTS DRAWING ONLY, ELECTRICAL CONNECTORS, AMP-AMPSEAL-SUPERSEAL	REV 00

Electrical Connectors, Weather Pack

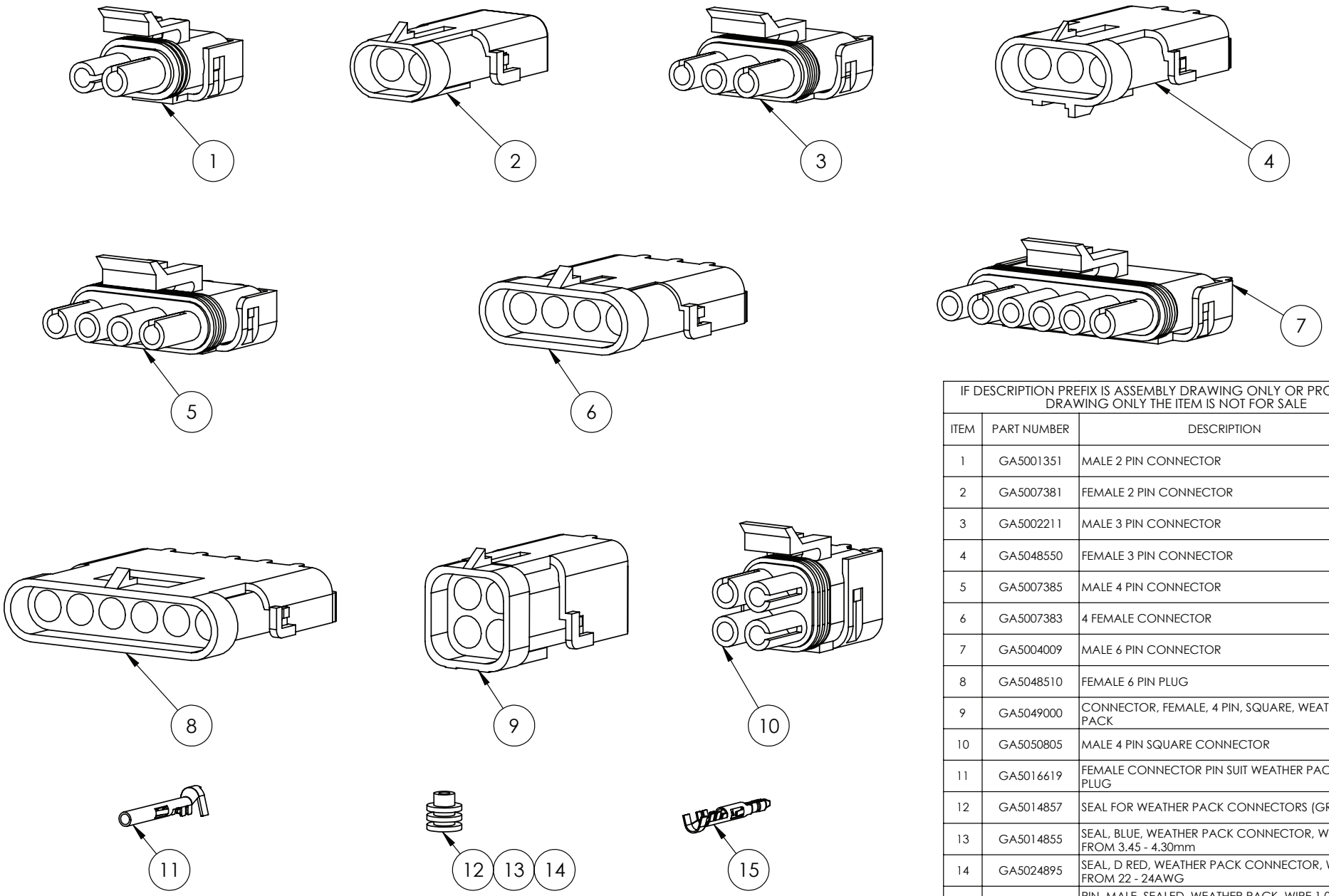

IF DESCRIPTION PREFIX IS ASSEMBLY DRAWING ONLY OR PRODUCTION DRAWING ONLY THE ITEM IS NOT FOR SALE			
ITEM	PART NUMBER	DESCRIPTION	QTY
1	GA5001351	MALE 2 PIN CONNECTOR	1
2	GA5007381	FEMALE 2 PIN CONNECTOR	1
3	GA5002211	MALE 3 PIN CONNECTOR	1
4	GA5048550	FEMALE 3 PIN CONNECTOR	1
5	GA5007385	MALE 4 PIN CONNECTOR	1
6	GA5007383	4 FEMALE CONNECTOR	1
7	GA5004009	MALE 6 PIN CONNECTOR	1
8	GA5048510	FEMALE 6 PIN PLUG	1
9	GA5049000	CONNECTOR, FEMALE, 4 PIN, SQUARE, WEATHER PACK	1
10	GA5050805	MALE 4 PIN SQUARE CONNECTOR	1
11	GA5016619	FEMALE CONNECTOR PIN SUIT WEATHER PACK PLUG	1
12	GA5014857	SEAL FOR WEATHER PACK CONNECTORS (GREEN)	1
13	GA5014855	SEAL, BLUE, WEATHER PACK CONNECTOR, WIRE FROM 3.45 - 4.30mm	1
14	GA5024895	SEAL, D RED, WEATHER PACK CONNECTOR, WIRE FROM 22 - 24AWG	1
15	GA5016617	PIN, MALE, SEALED, WEATHER PACK, WIRE 1.0 - 2.0mm	1
GA7800043 GOLDACRES		ELECTRICAL CONNECTORS, WEATHER PACK	REV 00

Electrical Connectors - Deutsch

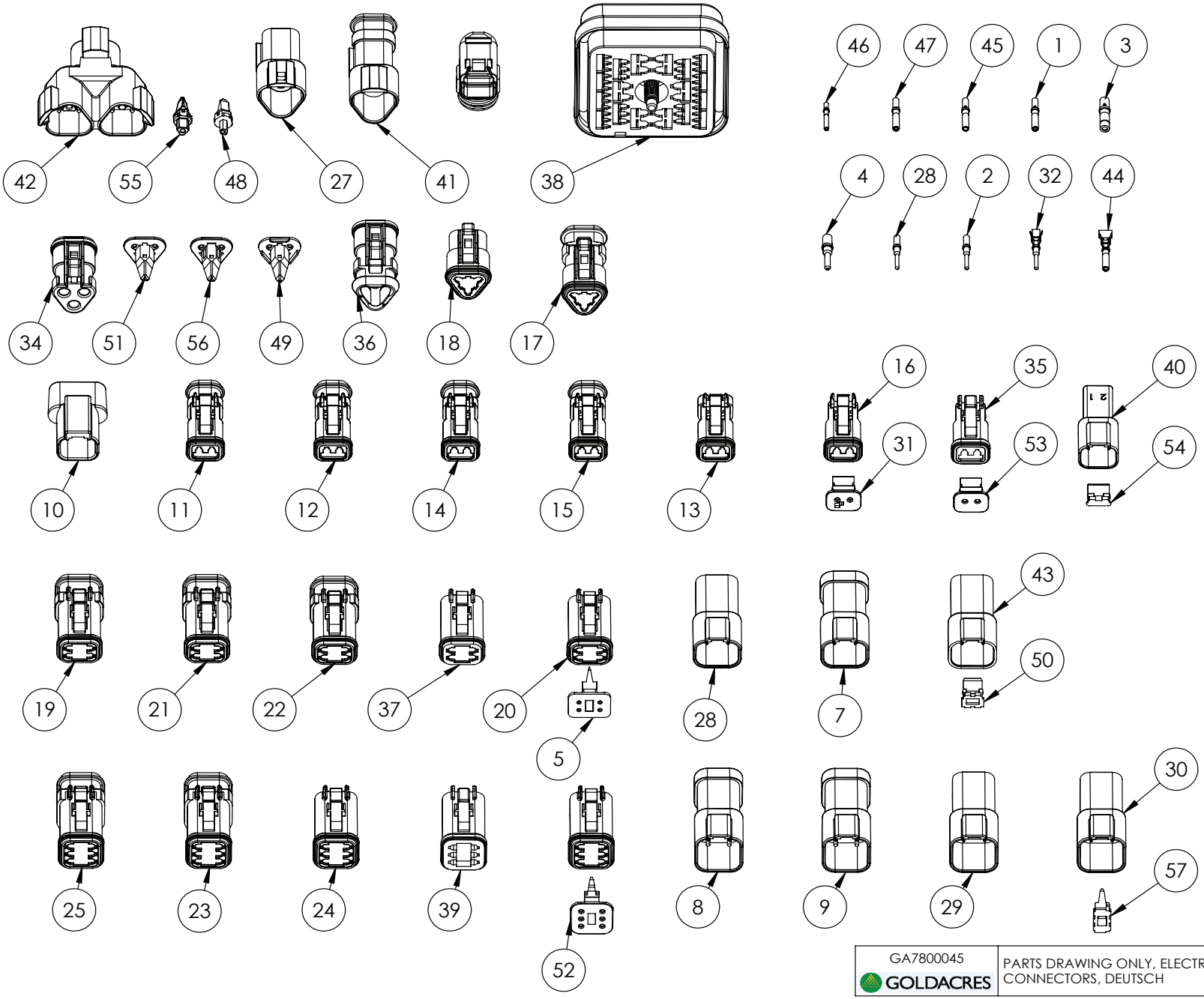

GA7800045 GOLDACRES	PARTS DRAWING ONLY, ELECTRICAL CONNECTORS, DEUTSCH	REV 00

Electrical Connectors - Deutsch - Parts List

IF DESCRIPTION PREFIX IS ASSEMBLY DRAWING ONLY OR PRODUCTION DRAWING ONLY THE ITEM IS NOT FOR SALE			
ITEM	PART NUMBER	DESCRIPTION	QTY.
1	GA3000873	ELECTRICAL CONNECTOR, ISO BUS, 4P PLUG IBRC SUIT GA3000872, 14084002132	1
2	GA5061270	SOCKET, FEMALE, SOLID, NICKEL, NUMBER 12, DEUTSCH	1
3	GA3000877	SOCKET, FEMALE, SOLID, NICKEL, 8-10 AWG, DEUTSCH, 0462-203-08141	1
4	GA5061260	CONNECTOR, DEUTSCH, CONTACT, PIN, SOLID, AWG 12-14, NICKEL	1
5	GA5050845	DEUTSCH 4PIN WEDGELOCK PLUG DT(W4S)	1
6	GA3001452	ELECTRICAL CONNECTOR, BACKSHELL, DEUTSCH, 90 DEGREE, SUIT 2 PIN, 1011-256-0205	1
7	GA3001443	ELECTRICAL CONNECTOR, BUS BAR, DEUTSCH, 4 PIN, 1X4 BUS, DT04-4P-EP13	1
8	GA3001444	ELECTRICAL CONNECTOR, BUS BAR, DEUTSCH, 6 PIN, 1X6 BUS, DT04-6P-EP13	1
9	GA3001445	ELECTRICAL CONNECTOR, BUS BAR, DEUTSCH, 6 PIN, 2X3 BUS, BLACK, DT04-6P-EP14	1
10	GA3001442	ELECTRICAL CONNECTOR, DEUTSCH, DIODE, 2 PIN RECEPTACLE, BLACK, DT04-2P-RT01	1
11	GA3001464	ELECTRICAL CONNECTOR, DEUTSCH, PLUG, 2 SOCKET, BLACK, SHRINK BOOT, DT06-2S-EP11	1
12	GA3001462	ELECTRICAL CONNECTOR, DEUTSCH, PLUG, 2 SOCKET, BLACK, SHRINK BOOT, SMALL SEAL, DT06-2S-CE13	1
13	GA3001460	ELECTRICAL CONNECTOR, DEUTSCH, PLUG, 2 SOCKET, END CAP, SMALL SEAL, DT06-2S-CE01	1
14	GA3001463	ELECTRICAL CONNECTOR, DEUTSCH, PLUG, 2 SOCKET, SHRINK BOOT, DT06-2S-E008	1
15	GA3001461	ELECTRICAL CONNECTOR, DEUTSCH, PLUG, 2 SOCKET, SHRINK BOOT, SMALL SEAL, DT06-2S-CE04	1
16	GA3001459	ELECTRICAL CONNECTOR, DEUTSCH, PLUG, 2 SOCKET, SMALL SEAL, DT06-2S-C015	1
17	GA3001466	ELECTRICAL CONNECTOR, DEUTSCH, PLUG, 3 SOCKET, SHRINK BOOT, SMALL SEAL, DT06-3S-CE04	1
18	GA3001465	ELECTRICAL CONNECTOR, DEUTSCH, PLUG, 3 SOCKET, SMALL SEAL, DT06-3S-C015	1
19	GA3001469	ELECTRICAL CONNECTOR, DEUTSCH, PLUG, 4 SOCKET, BLACK, SHRINK BOOT, SMALL SEAL, DT06-4S-CE13	1
20	GA3001468	ELECTRICAL CONNECTOR, DEUTSCH, PLUG, 4 SOCKET, BLACK, SMALL SEAL, DT06-4S-CE06	1
21	GA3001470	ELECTRICAL CONNECTOR, DEUTSCH, PLUG, 4 SOCKET, SHRINK BOOT, DT06-4S-E008	1
22	GA3001467	ELECTRICAL CONNECTOR, DEUTSCH, PLUG, 4 SOCKET, SHRINK BOOT, SMALL SEAL, DT06-4S-CE04	1
23	GA3001473	ELECTRICAL CONNECTOR, DEUTSCH, PLUG, 6 SOCKET, BLACK, SHRINK BOOT, SMALL SEAL, DT06-6S-CE13	1
24	GA3001472	ELECTRICAL CONNECTOR, DEUTSCH, PLUG, 6 SOCKET, BLACK, SMALL SEAL, DT06-6S-CE06	1
25	GA3001474	ELECTRICAL CONNECTOR, DEUTSCH, PLUG, 6 SOCKET, SHRINK BOOT, DT06-6S-E008	1
26	GA3001471	ELECTRICAL CONNECTOR, DEUTSCH, PLUG, 6 SOCKET, SMALL SEAL, DT06-6S-C015	1
27	GA3001438	ELECTRICAL CONNECTOR, DEUTSCH, RECEPTACLE, 3 PIN, SMALL SEALS, DT04-3P-C015	1
28	GA3001439	ELECTRICAL CONNECTOR, DEUTSCH, RECEPTACLE, 4 PIN, BLACK, SMALL SEALS, DT04-4P-CE02	1

IF DESCRIPTION PREFIX IS ASSEMBLY DRAWING ONLY OR PRODUCTION DRAWING ONLY THE ITEM IS NOT FOR SALE			
ITEM	PART NUMBER	DESCRIPTION	QTY.
29	GA3001441	ELECTRICAL CONNECTOR, DEUTSCH, RECEPTACLE, 6 PIN, BLACK, SMALL SEALS, DT04-6P-CE02	1
30	GA3001440	ELECTRICAL CONNECTOR, DEUTSCH, RECEPTACLE, 6 PIN, SMALL SEALS, DT04-6P-C015	1
31	GA3001478	ELECTRICAL CONNECTOR, DEUTSCH, WEDGE LOCK, SUIT 2S, GREY, A KEY, W2SA	1
32	GA5075255	PIN, MALE, NICKEL, CRIMP STYLE, NUMBER 16, DEUTSCH	1
33	GA5061240	PIN, MALE, SOLID, NICKEL, NUMBER 16, GREEN BAND, AWG 14, DEUTSCH, 0460-215-16141	1
34	GA5054350	PLUG, GREY, 120 OHM RESISTOR TERMINATOR, DEUTSCH	1
35	GA5052820	PLUG, 2 WAY, SOCKET, DT SERIES, DEUTSCH	1
36	GA5011831	PLUG, 3 WAY SOCKETS, SHRINK BOOT ADAPTER, DEUTSCH	1
37	GA5050840	PLUG, 4 WAY SOCKET, DT SERIES, DEUTSCH, DT06-4S	1
38	GA5060440	PLUG, 48 SUITS PINS, DRB SERIES, DEUTSCH	1
39	GA5050960	PLUG, 6 WAY SOCKET, DT SERIES, DEUTSCH	1
40	GA5052830	RECEPTACLE, 2 WAY, PINS, DT SERIES, DEUTSCH, DT04-2P	1
41	GA5050740	RECEPTACLE, 3 PIN, SHRINK BOOT, DEUTSCH, DT04-3P-E008	1
42	GA5054365	RECEPTACLE, 3 WAY 3 PIN, Y SPLITTER, DEUTSCH	1
43	GA5013783	RECEPTACLE, 4 WAY, PINS, DT SERIES DEUTSCH	1
44	GA3000022	SOCKET, FEMALE, NICKEL, CRIMP STYLE, NUMBER 16, DEUTSCH	1
45	GA5053235	SOCKET, FEMALE, NICKEL, NUMBER 16, 14 AWG, GREEN BAND, DEUTSCH	1
46	GA5061210	SOCKET, FEMALE, SOLID, NICKEL, NUMBER 20, DEUTSCH	1
47	GA5061230	SOCKET, FEMALE, SOLID, NICKEL, NUMBER 16, DEUTSCH	1
48	GA5050760	WEDGE LOCK, GREEN, 3 PIN, DEUTSCH, W3-P	1
49	GA5050761	WEDGE LOCK, GREEN, 3 SOCKET, DEUTSCH	1
50	GA5050765	WEDGE LOCK, GREEN, 4 WAY PINS, DEUTSCH	1
51	GA5050750	WEDGE LOCK, ORANGE, 3 SOCKET, DEUTSCH	1
52	GA5050965	WEDGE LOCK, ORANGE, 6 WAY SOCKETS, DT SERIES, DEUTSCH	1
53	GA5052825	WEDGE LOCK, 2 WAY, SOCKETS, DT SERIES, DEUTSCH	1
54	GA5052835	WEDGE LOCK, 2 WAY, DT SERIES, DEUTSCH	1
55	GA5017719	WEDGE LOCK, BLUE, 3 PIN, SUIT TERMINATOR, DEUTSCH	1
56	GA5017721	WEDGE LOCK, BLUE, 3 SOCKET, DEUTSCH	1
57	GA5050975	WEDGE LOCK, 6 PIN SUIT DEUTSCH, DT04-6P	1

GA7800045 GOLDACRES	PARTS DRAWING ONLY, ELECTRICAL CONNECTORS, DEUTSCH	REV 00

Electrical Connectors - Deutsch

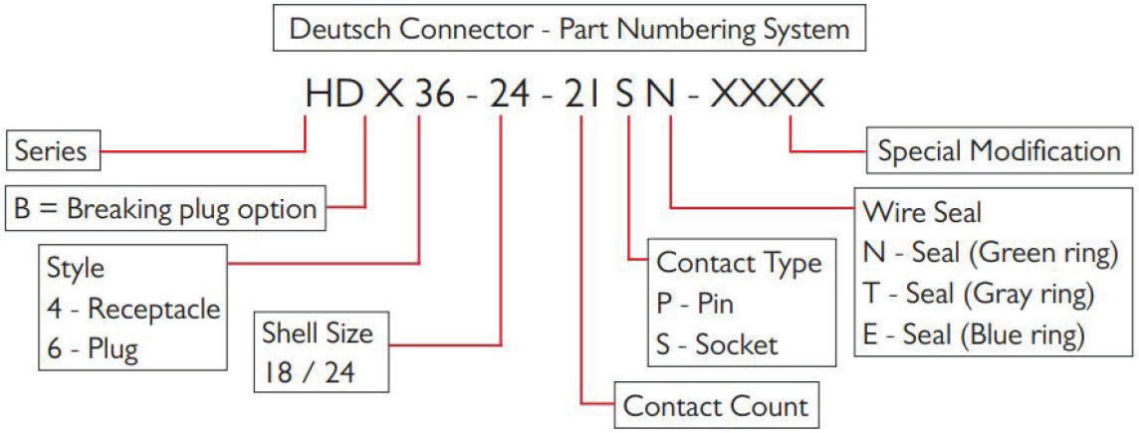

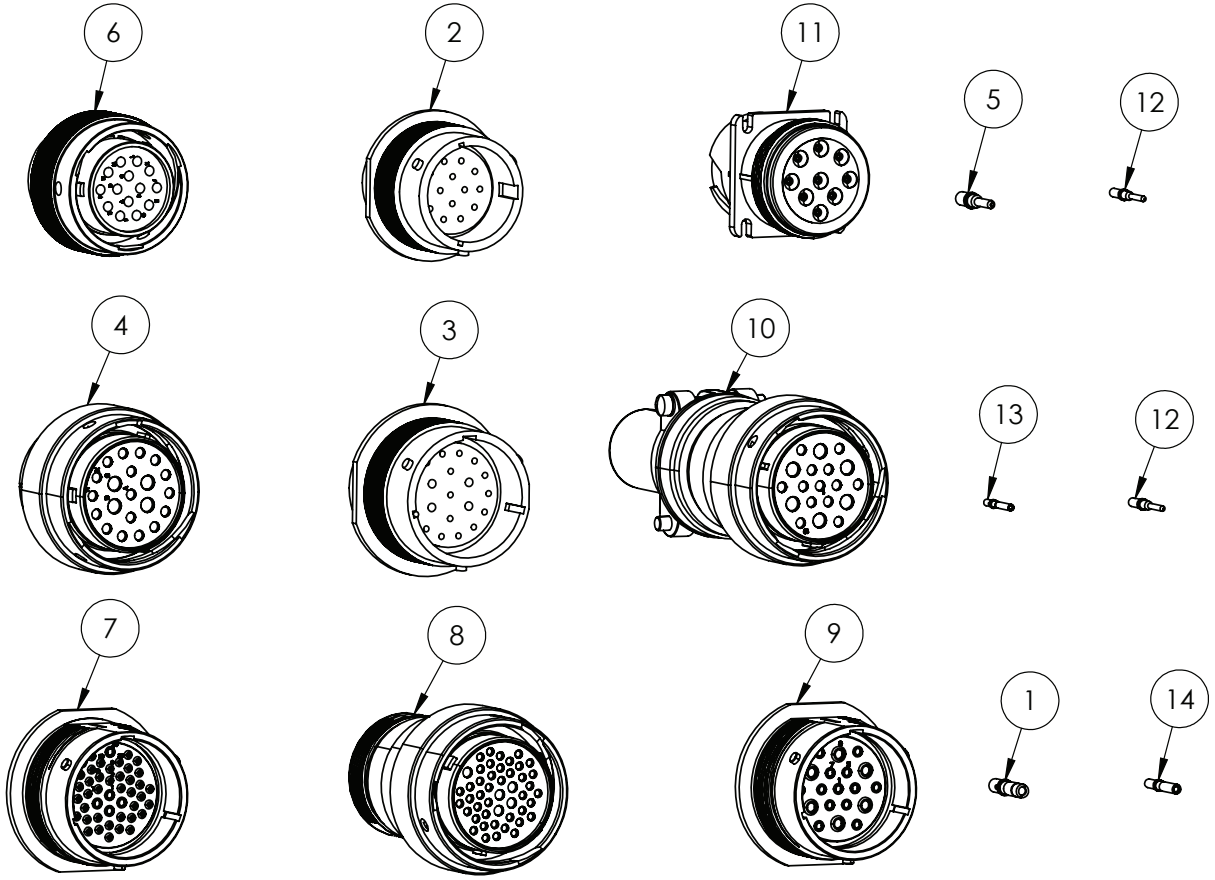

IF DESCRIPTION PREFIX IS ASSEMBLY DRAWING ONLY OR PRODUCTION DRAWING ONLY THE ITEM IS NOT FOR SALE			
ITEM	PART NUMBER	DESCRIPTION	QTY.
1	GA3000877	SOCKET, FEMALE, SOLID, NICKEL, 8-10 AWG, DEUTSCH, 0462-203-08141	1
2	GA5002671	CONNECTOR HD34-18-14PN DEUTSCH	1
3	GA5002675	CONNECTOR HD34-24-21PN DEUTSCH	1
4	GA5002655	CONNECTOR HD36-24-21SN-059 DEUTSCH	1
5	GA5061260	CONNECTOR, DEUTSCH, CONTACT, PIN, SOLID, AWG 12-14, NICKEL	1
6	GA5002663	CONNECTOR, DEUTSCH, 14 PIN, FEMALE, HD36-18-14SN	1
7	GA5062635	DEUTSCH CONNECTOR HD34-24-47-PE	1
8	GA5062640	DEUTSCH CONNECTOR HD36-24-47-SE-059 (STRAIN RELIEF)	1
9	GA5021315	DEUTSCH CONNECTOR HD34-24-19PN	1
10	GA5021310	DEUTSCH CONNECTOR HD36-24-19SN-059 (STRAIN RELIEF)	1
11	GA3001488	ELECTRICAL CONNECTOR, DEUTSCH, 9 PIN, HD10 J1939, HD10-9-1939PE	1
12	GA5061240	PIN, MALE, SOLID, NICKEL, NUMBER 16, GREEN BAND, AWG 14, DEUTSCH, 0460-215-16141	2
13	GA5061210	SOCKET, FEMALE, SOLID, NICKEL, NUMBER 20, DEUTSCH	1
14	GA5061230	SOCKET, FEMALE, SOLID, NICKEL, NUMBER 16, DEUTSCH	1
GA7800044 GOLDACRES		PARTS DRAWING ONLY, ELECTRICAL CONNECTORS, DEUTSCH	REV 00

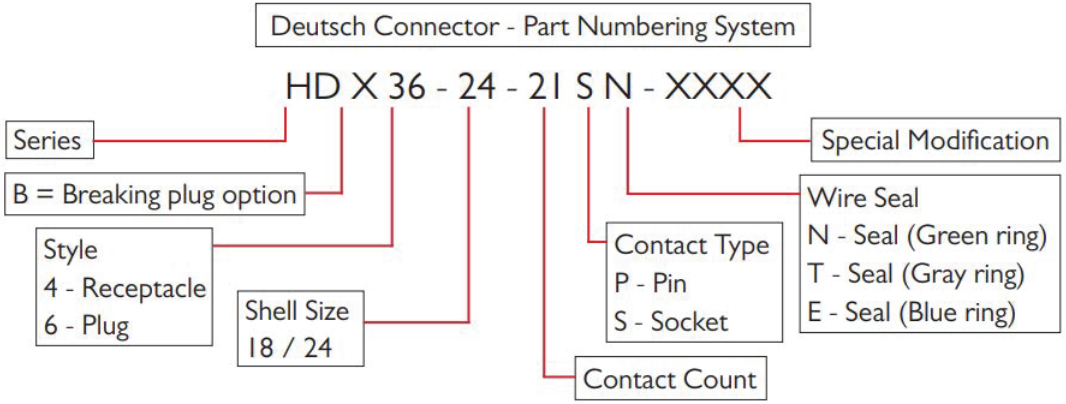

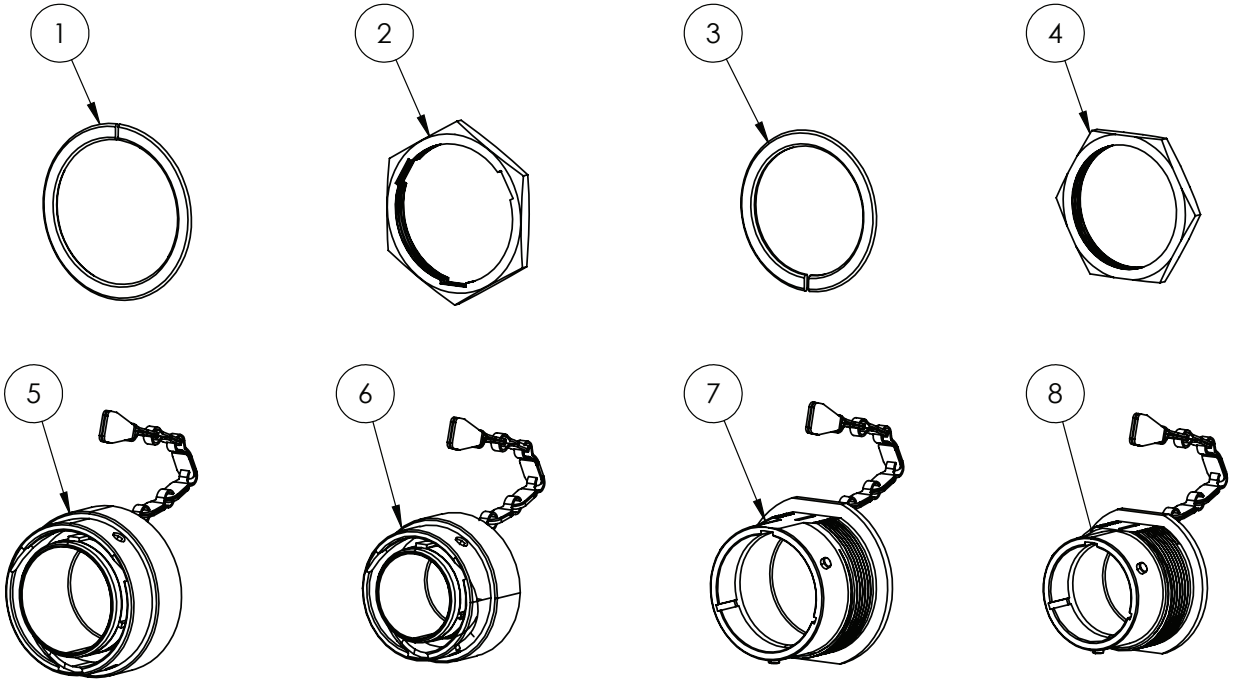

IF DESCRIPTION PREFIX IS ASSEMBLY DRAWING ONLY OR PRODUCTION DRAWING ONLY THE ITEM IS NOT FOR SALE			
ITEM	PART NUMBER	DESCRIPTION	QTY
1	GA5017621	WASHER DEUTSCH SHELL #24	1
2	GA5012399	NUT, FOR CONNECTOR, 24 SHELL, DEUTSCH	1
3	GA5009893	HD SERIES WASHER SIZE #18 SHELL	1
4	GA5009887	HD NUT SIZE #18 SHELL	1
5	GA5020925	DUST CAP, FEMALE, 24 SHELL, ALUMINIUM, DEUTSCH, HDC36-24	1
6	GA5020915	DUST CAP, SUIT HDC36-18 CONNECTOR, DEUTSCH	1
7	GA5020920	DUST CAP, MALE, 24 SHELL, ALUMINIUM, DEUTSCH, HDC34-24	1
8	GA5020910	DUST CAP, SUIT HDC34-18 CONNECTOR, DEUTSCH	1
GA7800047 GOLDACRES		ELECTRICAL CONNECTORS - DEUTSCH	REV 00

10 - Hydraulic & Pneumatics

Hydraulic Reservoir

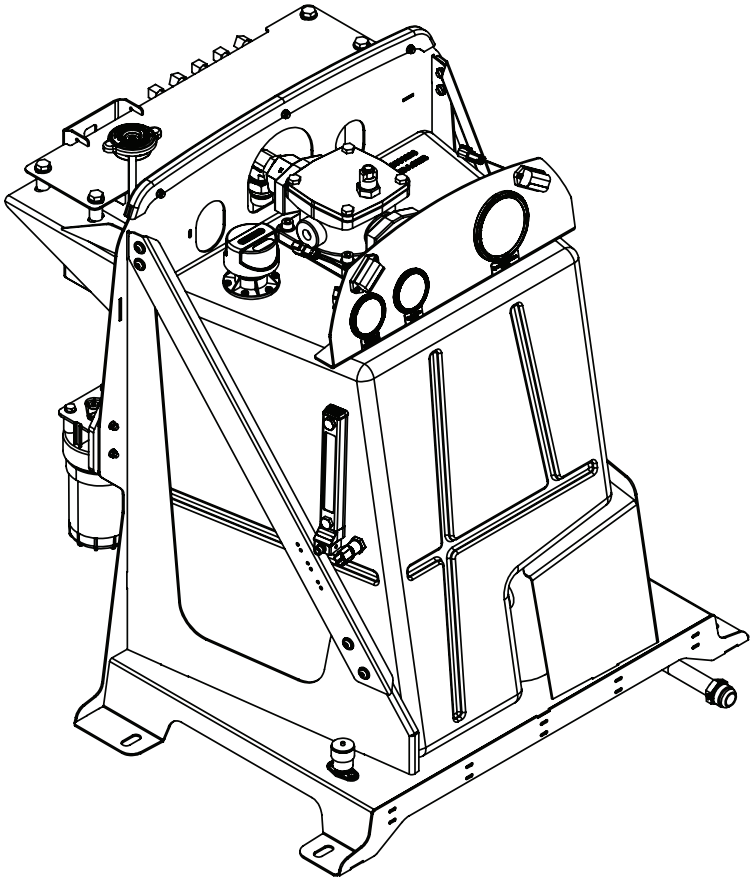

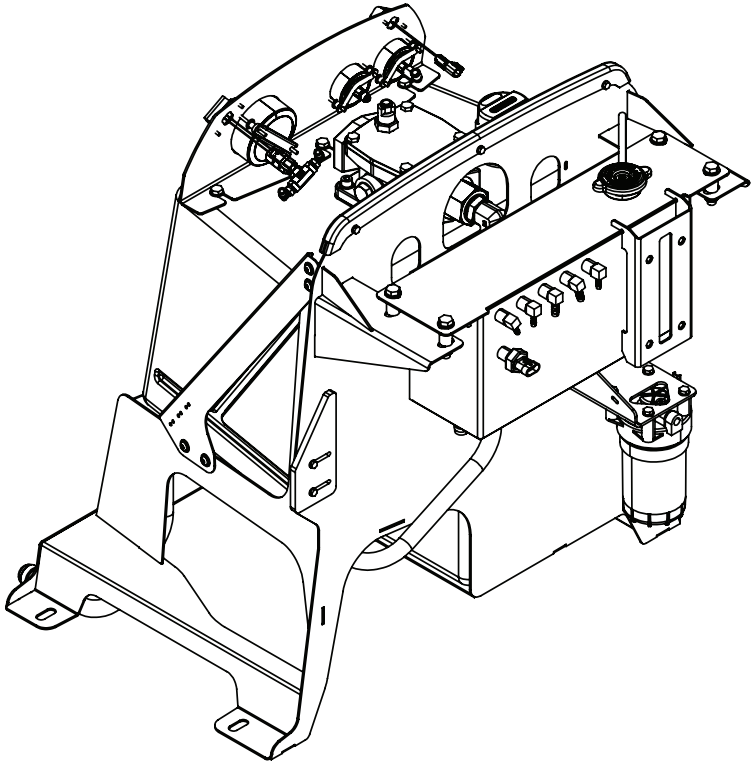

GA6101300 GOLDACRES	HYDRAULIC OIL RESERVOIR ASSEMBLY, G4 MY24	REV 00

Hydraulic Reservoir Frame, Support Brackets & Wear Strip

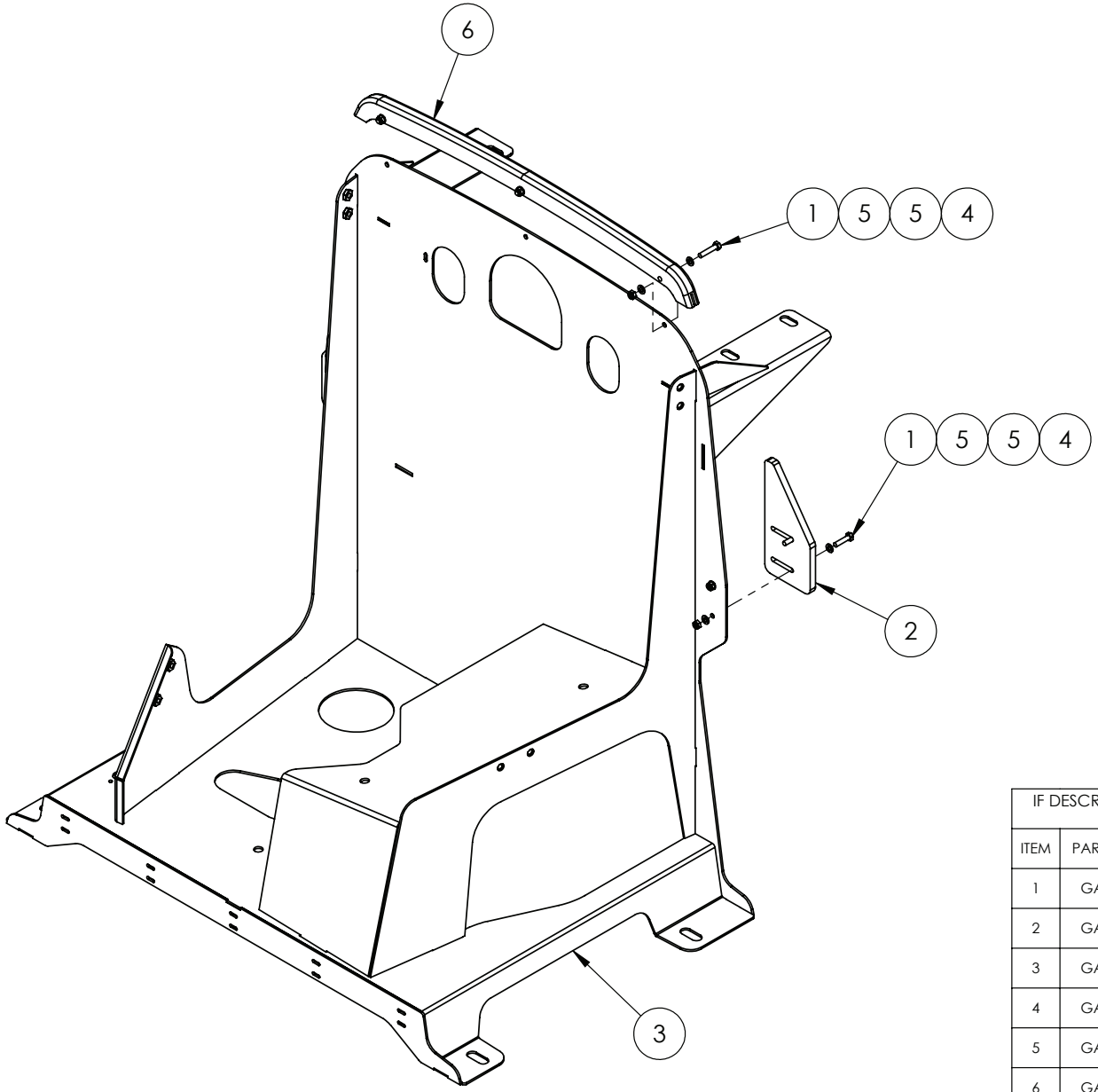

IF DESCRIPTION PREFIX IS ASSEMBLY DRAWING ONLY OR PRODUCTION DRAWING ONLY THE ITEM IS NOT FOR SALE			
ITEM	PART NUMBER	DESCRIPTION	QTY
1	GA5004073	BOLT M6 X 25 GR8.8 ZP	7
2	GA5072695	BONNET SIDE SUPPORT PLASTIC SLIDER	2
3	GA4604230	FRAME, HYDRAULIC OIL RESERVOIR, G4 MY24	1
4	GA5048115	NUT M6 NYLOC ZP	7
5	GA5004437	WASHER 6mm FLAT SS	14
6	GA5074205	WEAR STRIP, BONNET, SERIES 2 G6	1
GA6101300-01 GOLDACRES		HYDRAULIC OIL RESERVOIR ASSEMBLY, G4 MY24	REV 00

Hydraulic Reservoir, Tank (Bare) & Service Indicator

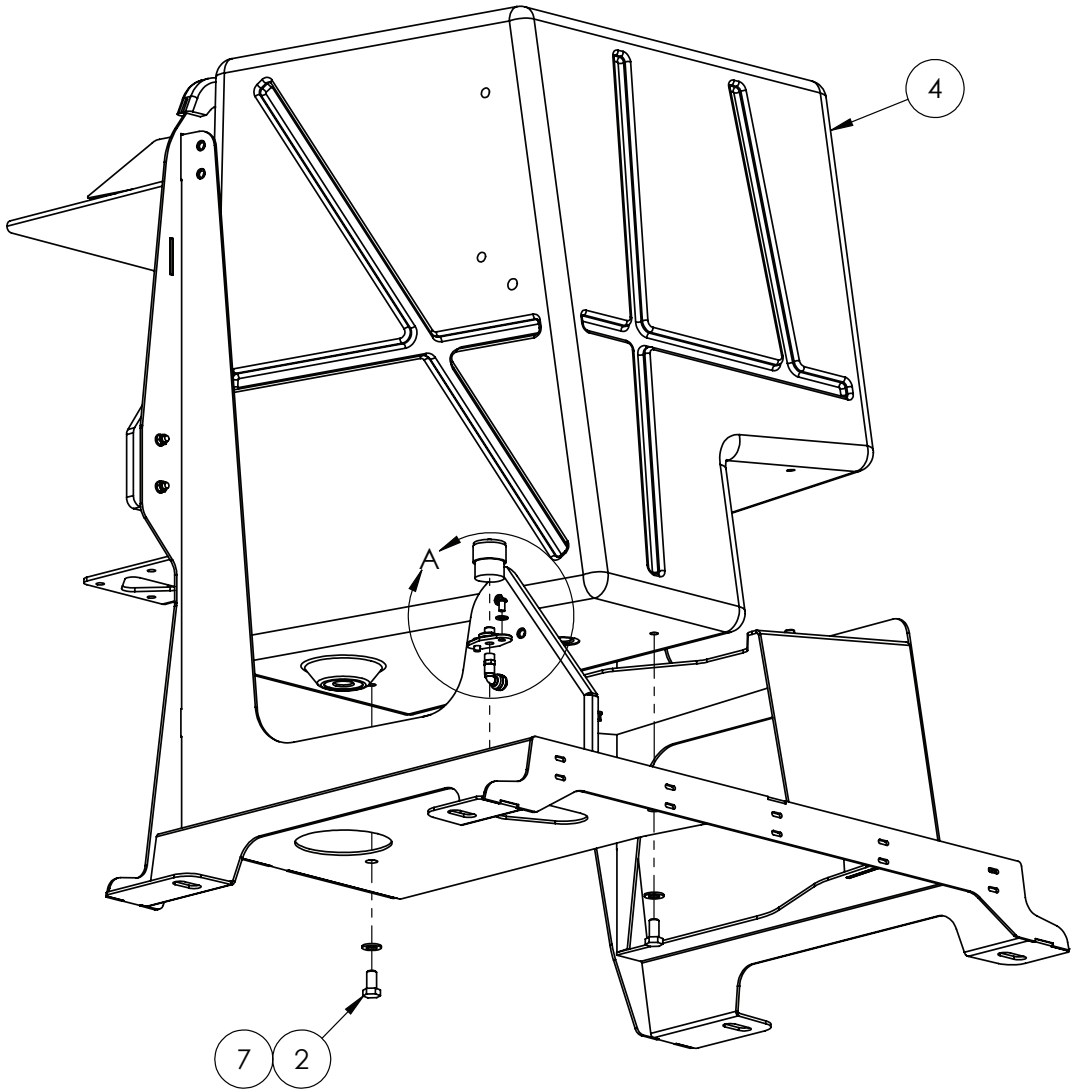

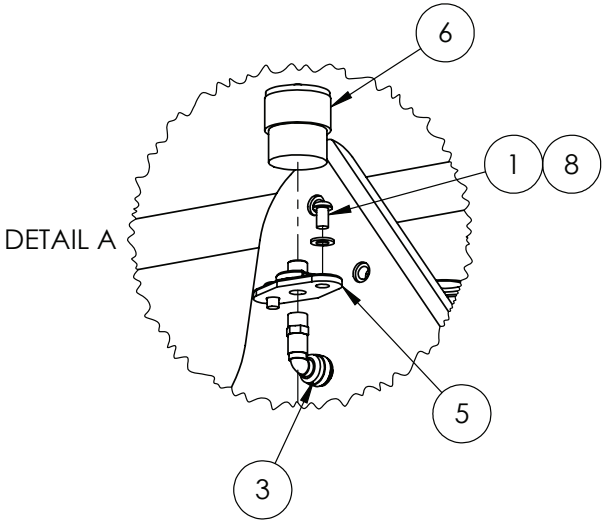

IF DESCRIPTION PREFIX IS ASSEMBLY DRAWING ONLY OR PRODUCTION DRAWING ONLY THE ITEM IS NOT FOR SALE			
ITEM	PART NUMBER	DESCRIPTION	QTY
1	GA5004023	BHCS M6 X 10 SS A2-70	2
2	GA5006113	BOLT M10 X 20 GR8.8 ZP	4
3	GA5045145	ELBOW 6mm BRASS MALE X 1/8" PLASTIC	1
4	GA3501213	HYDRAULIC OIL RESERVOIR, BARE, 100L, G4, MY24	1
5	GA5070470	SERVICE INDICATOR MOUNTING FLANGE	1
6	GA5010525	SERVICE INDICATOR KIT 25, SUIT CROP CRUISER AND G3 G4	1
7	GA5000117	WASHER 10mm FLAT SS HD	4
8	GA5004437	WASHER 6mm FLAT SS	2
GA6101300-02 GOLDACRES		HYDRAULIC OIL RESERVOIR ASSEMBLY, G4 MY24	REV 00

Hydraulic Reservoir Frame, Side Plates

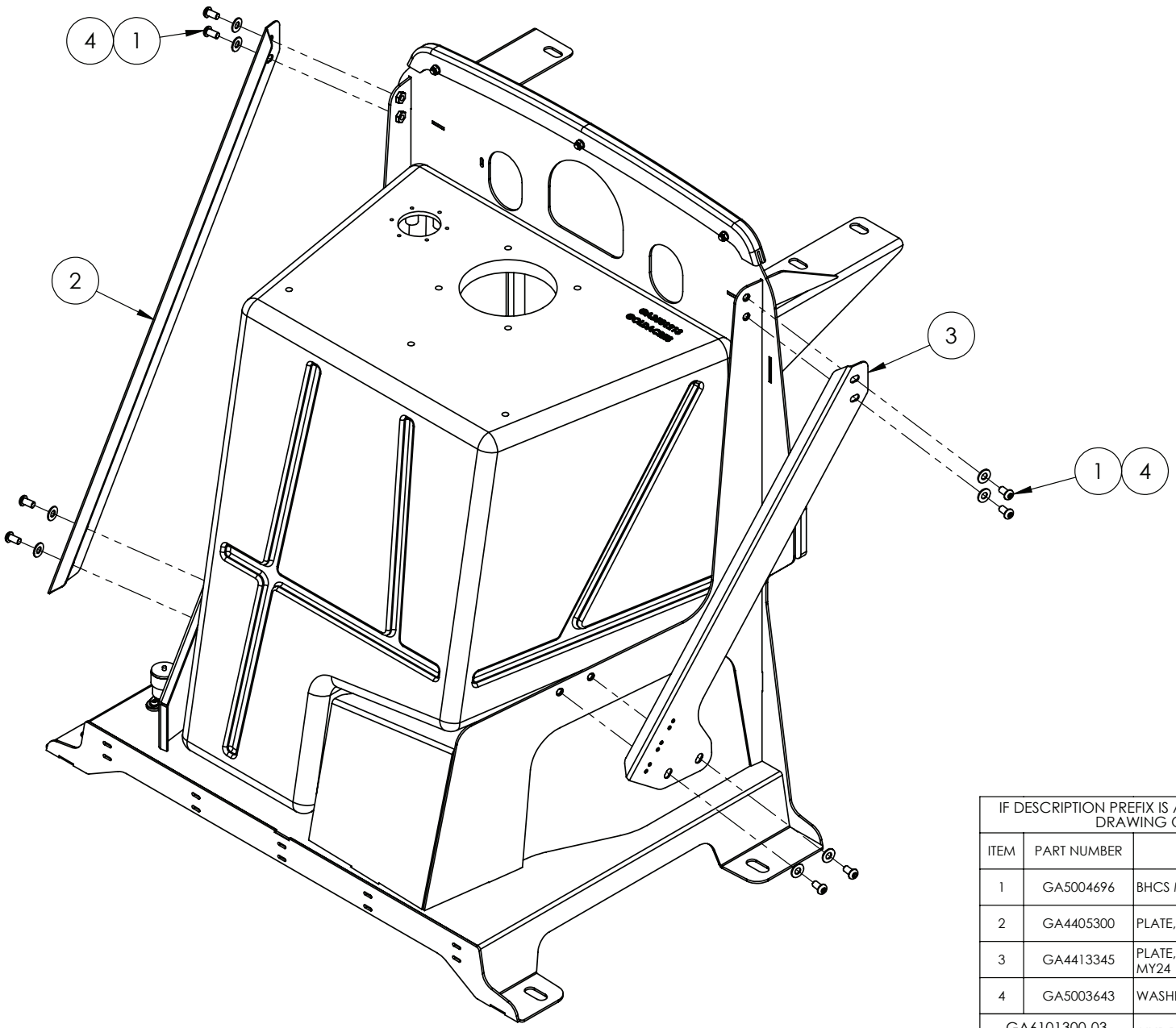

IF DESCRIPTION PREFIX IS ASSEMBLY DRAWING ONLY OR PRODUCTION DRAWING ONLY THE ITEM IS NOT FOR SALE			
ITEM	PART NUMBER	DESCRIPTION	QTY
1	GA5004696	BHCS M8 X 16 SS A2-70	8
2	GA4405300	PLATE, OIL RESERVOIR GUSSET, BOLT ON, LH, MY20	1
3	GA4413345	PLATE, OIL RESERVOIR GUSSET, BOLT ON, RH, G4 MY24	1
4	GA5003643	WASHER 8mm FLAT SS HD	8
GA6101300-03 GOLDACRES		HYDRAULIC OIL RESERVOIR ASSEMBLY, G4 MY24	REV 00

Hydraulic Reservoir Assembly, Level Gauge & Plumbing Adaptors

TORQUE SPECIFICATIONS

G 3/4" BSP	20Nm
G 1/2" BSP	15Nm
M12 (Level Gauge)	6Nm
M10	15Nm

IF 70011 OPTIONED
FIT ITEM 9,
IF 70012 OPTIONED
ITEM 9 NOT REQUIRED.

VIEW OF TANK
FROM UNDERNEATH

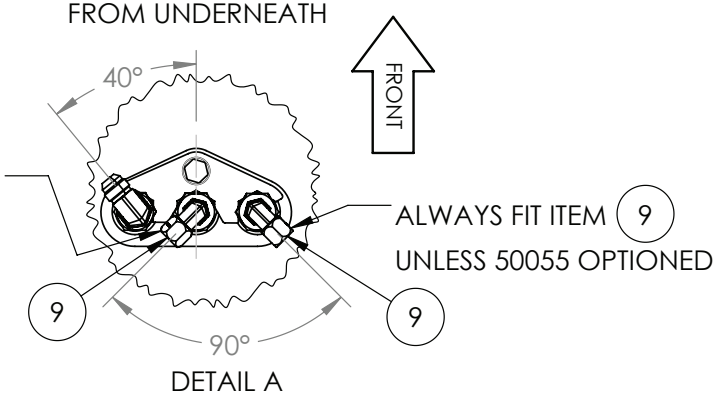

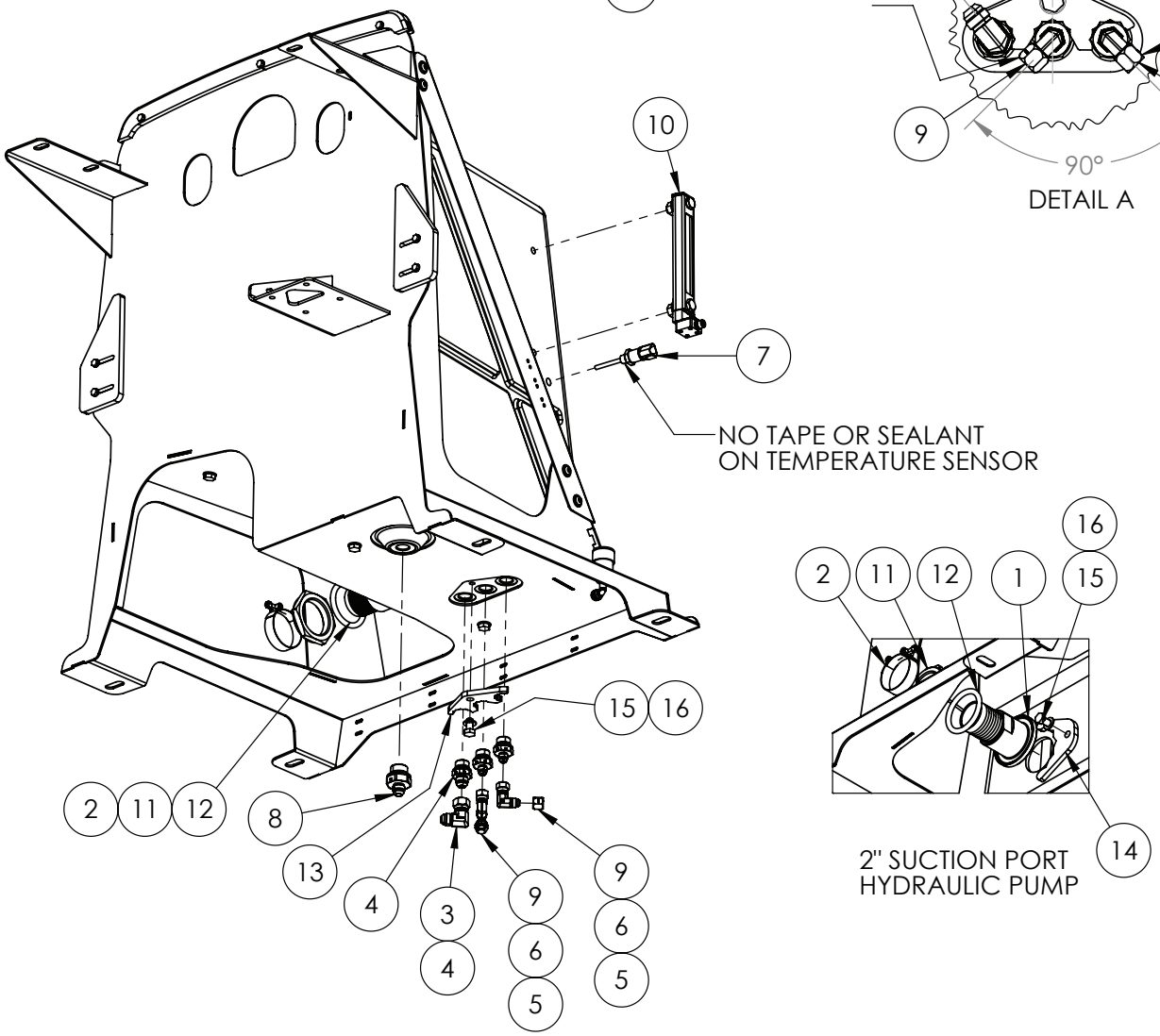

IF DESCRIPTION PREFIX IS ASSEMBLY DRAWING ONLY OR PRODUCTION DRAWING ONLY THE ITEM IS NOT FOR SALE			
ITEM	PART NUMBER	DESCRIPTION	QTY
1	GA4583640	BULKHEAD, 2" BSPP SUIT HYDRAULIC FITTING	1
2	GA5078424	HOSE CLAMP, 60 - 63mm, WIDE BAND T-BOLT, SS, PERFORMER	1
3	GA3500822	HYDRAULIC ADAPTOR ELBOW, 3/4" JIC MALE X 3/4" JIC FEMALE SWIVEL, S15-1212	1
4	GA3500861	HYDRAULIC ADAPTOR NIPPLE, 1/2" BSPP O-RING MALE X 3/4" JIC MALE, S74D-0812	1
5	GA3500860	HYDRAULIC ADAPTOR NIPPLE, 1/2" BSPP O-RING MALE X 9/16" JIC MALE, S74D-0809	2
6	GA3500002	HYDRAULIC COUPLING, ELBOW, 90 DEGREE, 9/16" MALE JIC, 9/16" FEMALE SWIVEL JIC	2
7	GA3000321	HYDRAULIC TEMPERATURE SENSOR, OIL RESERVOIR, HYDAC, HTT 824K-A-050-036	1
8	GA3500787	HYDRAULIC ADAPTER, NIPPLE, 3/4" BSPP O-RING MALE C/W RETAINING RING X 3/4" JIC MALE, S74D-1212	1
9	GA3500793	HYDRAULIC ADAPTOR, CAP, 9/16" JIC FEMALE, S65-09	2
10	GA3000495	LEVEL GAUGE WITH LOW LEVEL SWITCH - FSK_176_2.4_W_12_SEW	1
11	GA4550350	NUT, BULKHEAD, 2" BSPP SUIT HYDRAULIC FITTING	1
12	GA5072365	O RING, 60 X 8, RUBBER	1
13	GA4413365	PLATE, OIL RESERVOIR CASE DRAIN PORT SUPPORT, G4 MY24	1
14	GA4413360	PLATE, OIL RESERVOIR SUCTION PORT SUPPORT, G4 MY24	1
15	GA5006113	SET SCREW M10 X 20 GR8.8 ZP	2
16	GA5000117	WASHER 10mm FLAT SS HD	2
GA6101300-04 GOLDACRES		HYDRAULIC OIL RESERVOIR ASSEMBLY, G4 MY24	REV 01

Hydraulic Reservoir Assembly, Return Filter & Gauges

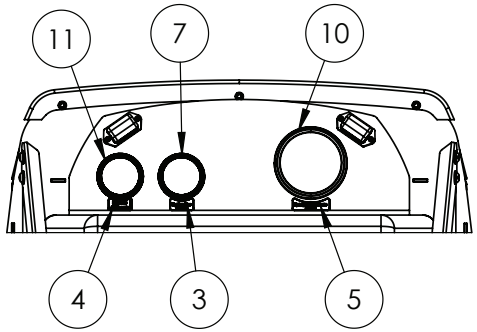

APPLY LOCTITE 577 TO PNEUMATIC THREADED CONNECTIONS ITEMS 1, 10, 15, 16 AND 21

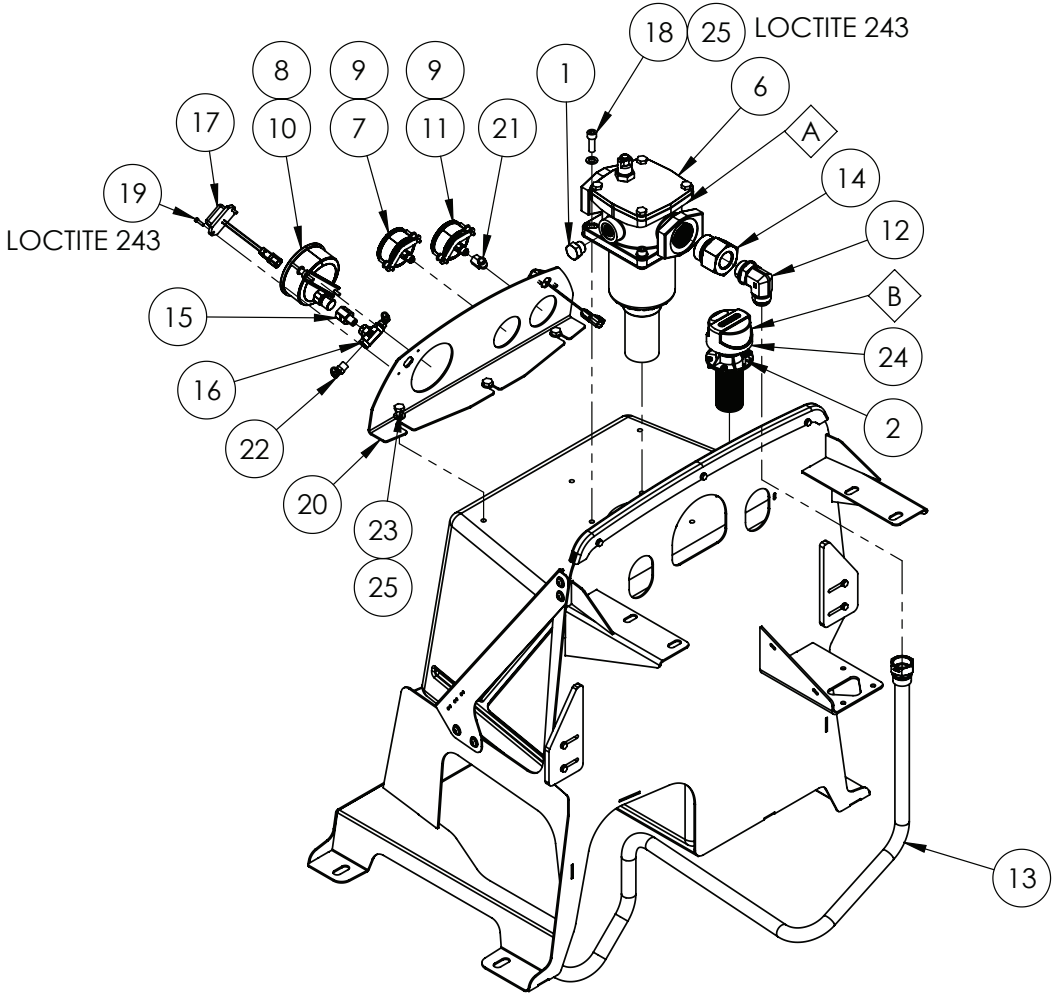

REPLACEMENT PARTS			
ITEM	PART NUMBER	DESCRIPTION	QTY
A	GA5069056	FILTER ELEMENT, HYDRAULIC RETURN TO SUIT TANK MOUNTED FILTER GA5069055, HYDAC	1
B	GA5075450	BREATHER FILTER CAP, OIL RESERVOIR FILLER, HYDAC	1

IF DESCRIPTION PREFIX IS ASSEMBLY DRAWING ONLY OR PRODUCTION DRAWING ONLY THE ITEM IS NOT FOR SALE			
ITEM	PART NUMBER	DESCRIPTION	QTY
1	GA3500301	1/2" BSPP PLUG WITH O RING	1
2	GA5003977	BOLT PAN HEAD M5 X 16 SS A2-70	6
3	GA8701135	DECAL, HYDRAULICS	1
4	GA8701134	DECAL, RAPIDFIRE AIR PRESSURE	1
5	GA8701136	DECAL, SPRAYLINE PRESSURE	1
6	GA5069055	FILTER, HYDRAULIC RETURN, TANK TOP, RFM ON 330 V F 10 B 3.0/-V125-SO682, HYDAC	1
7	GA3501149	GAUGE PRESSURE, REAR MOUNT, 3500PSI, 250BAR, 63mm FACE, G 1/4" HINTEN, 6007003	1
8	GA5075460	GAUGE RETAINER, MOUNTING BRACKET, 100mm GAUGE, HYDAC	1
9	GA5075455	GAUGE RETAINER, MOUNTING BRACKET, 63mm GAUGE, HYDAC	2
10	GA5075420	GAUGE, 100mm, 3/8" BSP REAR PORT, LARGE, 10 BAR, HYDAC	1
11	GA3500693	GAUGE, 63mm, 1/4" BSP REAR PORT, SMALL, 160 PSI 10 BAR HYDAC	1
12	GA3500732	HYDRAULIC ADAPTOR ELBOW, 1" BSPP TO 1 5/16" JIC	1
13	GA3501593	HYDRAULIC PIPE, HYDRAULIC OIL RESERVOIR, S2 G4	1
14	GA3500191	HYDRAULIC ADAPTOR, REDUCING BUSH, 1 1/2" BSPP MALE X 1" BSPP FEMALE, S102-2416	1
15	GA3501585	HYDRAULIC ADAPTOR, STRAIGHT, 1/4" BSPT MALE, 3/8" BSPT FEMALE	1
16	GA3500242	HYDRAULIC ADAPTOR, TEE, 1/4" BSPT FEMALE X 1/4" BSPT FEMALE X 1/4" BSPT FEMALE	1
17	GA4909315	LED ASSEMBLY, GAUGE LIGHT WITH DEUTSCH CONNECTOR, G4 MY24	2
18	GA5006129	M10 X 30 UNBRAKO	4
19	GA5011363	M4 X 16 SHCS	4
20	GA4405295	PLATE, GAUGE PLATE, OIL RESERVOIR, MY20	1
21	GA7000015	PNEUMATIC FITTING, FEMALE 1/4" BSPP X 8mm PUSH IN, FEMALE STUD ELBOW	1
22	GA5016233	PNEUMATIC FITTING, ELBOW, 90 DEGREE, 1/4 BSP MALE X 6mm PUSH IN TYPE, METAL	2
23	GA5006113	SET SCREW M10 X 20 GR8.8 ZP	3
24	GA5078873	TANK BREATHER FILTER WITH FILLER STRAINER, HYDAC, BREATHER ELF P 30 F W 1.0/-AS	1
25	GA5000117	WASHER 10mm FLAT SS HD	7
GA6101300-05 GOLDACRES		HYDRAULIC OIL RESERVOIR ASSEMBLY, G4 MY24	REV 00.B

Hydraulic Return Filter, Hydac

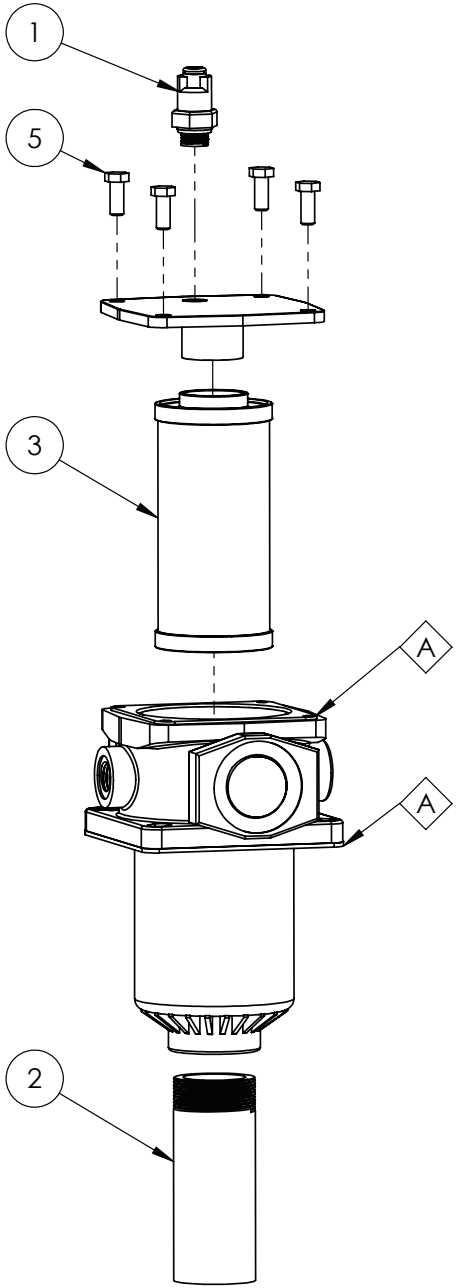

REPLACEMENT PARTS			
ITEM	PART NUMBER	DESCRIPTION	QTY
A	GA5070580	SEAL KIT, GASKET AND O RING, HYDRAULIC OIL RETURN FILTER HOUSING, HYDAC	1

IF DESCRIPTION PREFIX IS ASSEMBLY DRAWING ONLY OR PRODUCTION DRAWING ONLY THE ITEM IS NOT FOR SALE			
ITEM	PART NUMBER	DESCRIPTION	QTY
1	GA5070780	CLOGGING INDICATOR OIL RETURN 303156	1
2	GA5069910	DROP TUBE _2" RISER- RETURN FILTER SP 2011	1
3	GA5069056	FILTER ELEMENT, HYDRAULIC RETURN TO SUIT TANK MOUNTED FILTER GA5069055, HYDAC	1
4	GA5070580	GASKET HYDRAULIC OIL RETURN FILTER HOUSING	1
5	GA5066162	SET SCREW M10 X 25 SS A2-70	4
GA5069055 GOLDACRES		FILTER, HYDRAULIC RETURN, TANK TOP, RFM ON 330 V F 10 B 3.0/-V125-SO682, HYDAC	REV 01.B

Hydraulic Reservoir Expansion Tank & Secondary Fuel Filter

REPLACEMENT PARTS			
ITEM	PART NUMBER	DESCRIPTION	QTY
A	GA2700193	FILTER, FUEL, SECONDARY, CUMMINS B4.5L, FF63054NN	1

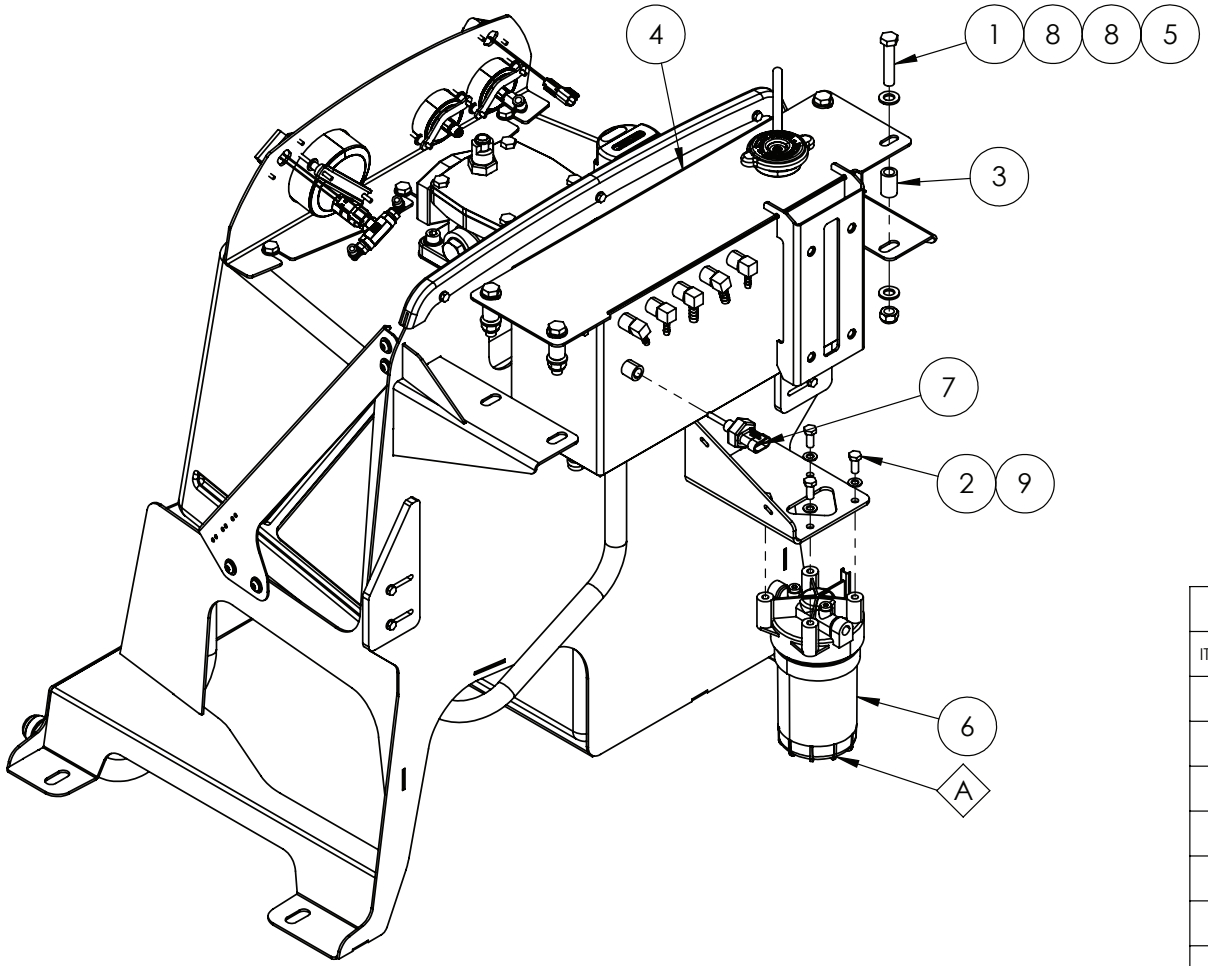

IF DESCRIPTION PREFIX IS ASSEMBLY DRAWING ONLY OR PRODUCTION DRAWING ONLY THE ITEM IS NOT FOR SALE			
ITEM	PART NUMBER	DESCRIPTION	QTY
1	GA5000335	BOLT M12 X 60 GR8.8 ZP	4
2	GA5004085	BOLT M8 X 20 GR8.8 ZP	4
3	GA4552860	CRUSH TUBE, 12.5 ID X 19 OD X 30 LONG	4
4	GA2700146	EXPANSION TANK ASSEMBLY, G4, S2	1
5	GA5012461	NUT M12 NYLOC ZP	4
6	GA2700140	SECONDARY FUEL FILTER, CUMMINS FF90871, G4 MY24	1
7	GA3000398	SENSOR, LOW COOLANT LEVEL, CUMMINS, SUIT CM2850 ECM	1
8	GA5000577	WASHER 12mm FLAT SS HD	8
9	GA5003643	WASHER 8mm FLAT SS HD	4
GA6101300-06 GOLDACRES		HYDRAULIC OIL RESERVOIR ASSEMBLY, G4 MY24	REV 00

Hydraulic Oil Cooler

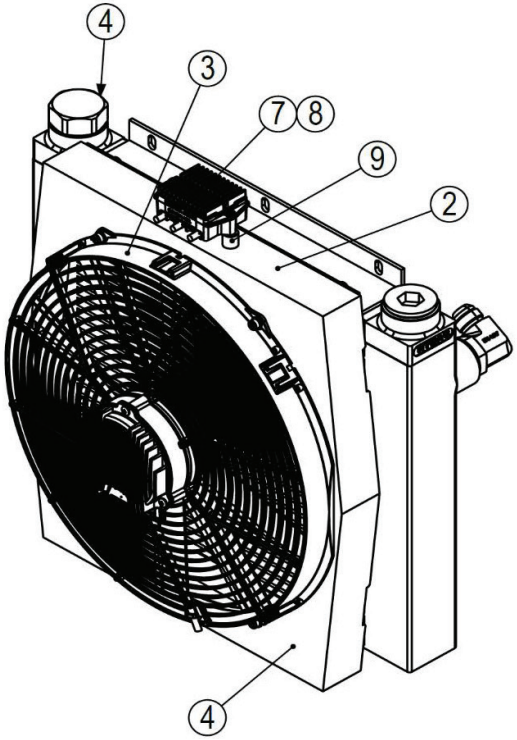

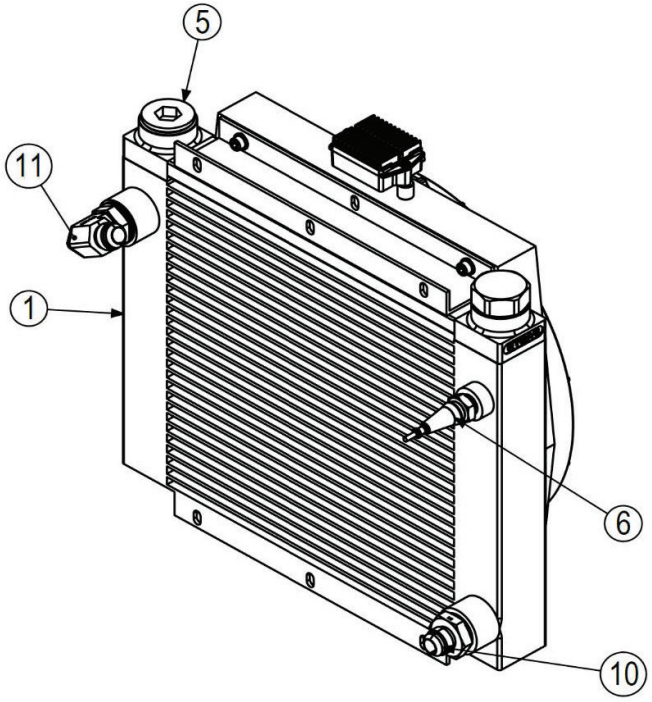

IF DESCRIPTION PREFIX IS ASSEMBLY DRAWING ONLY OR PRODUCTION DRAWING ONLY THE ITEM IS NOT FOR SALE			
ITEM	PART NUMBER	DESCRIPTION	QTY
1	GA3500871	RADIATOR CORE, HYDRAULIC OIL COOLER, HYDAC, OK-ELD4H, 3139584	1
2	GA5025815	HOUSING, SUIT, OIL COLLER, HYDAC, 3083883	1
3	GA3500872	FAN, 385mm, 12V, HYDRAULIC OIL COOLER, HYDAC, 2351191	1
4	GA5078933	INTERGRATED BYPASS THERMO, IBT45-3, HYDAC, 3193660	1
5	GA5025820	PLUG, G1-1/4", SUIT, OIL COOLER, HYDAC, 6146487	1
6	GA3500873	THERMISTOR, M22X1.5, WITH CABLE & CONNECTOR, HYDRAULIC OIL COOLER, HYDAC, 3403177	1
7	GA3500874	ELECTRONIC FAN SPEED CONTROLLER, HYD OIL COOLER, ESC 50-70 INV 10MIN / 30S, HYDAC, 2354134	1
8	GA5025825	KIT, ESC, THERMO ELCTRIC SHIELD, SUIT, HYDAC, OIL COOLER, 2352814	1
9	GA5025830	VIBRATION MOUNT, SUIT, HYDAC, OIL COOLER, 2355001	2
10	GA3500735	HYDRAULIC ADAPTOR, NIPPLE, 1" BSPP O-RING MALE X 1 1/16" JIC MALE, S74-1617	1
11	GA3500781	HYDRAULIC ADAPTER, NIPPLE, 1 1/16" JIC MALE X 1" BSPP O-RING MALE, S76-1617	1
GA3500708 GOLDACRES		COOLER, HYDRAULIC OIL, THERMAL BYPASS, 12V THERMOFAN, OK-ELD4H, HYDAC	REV 00

Hydraulic Manifold Assembly, Chassis Control

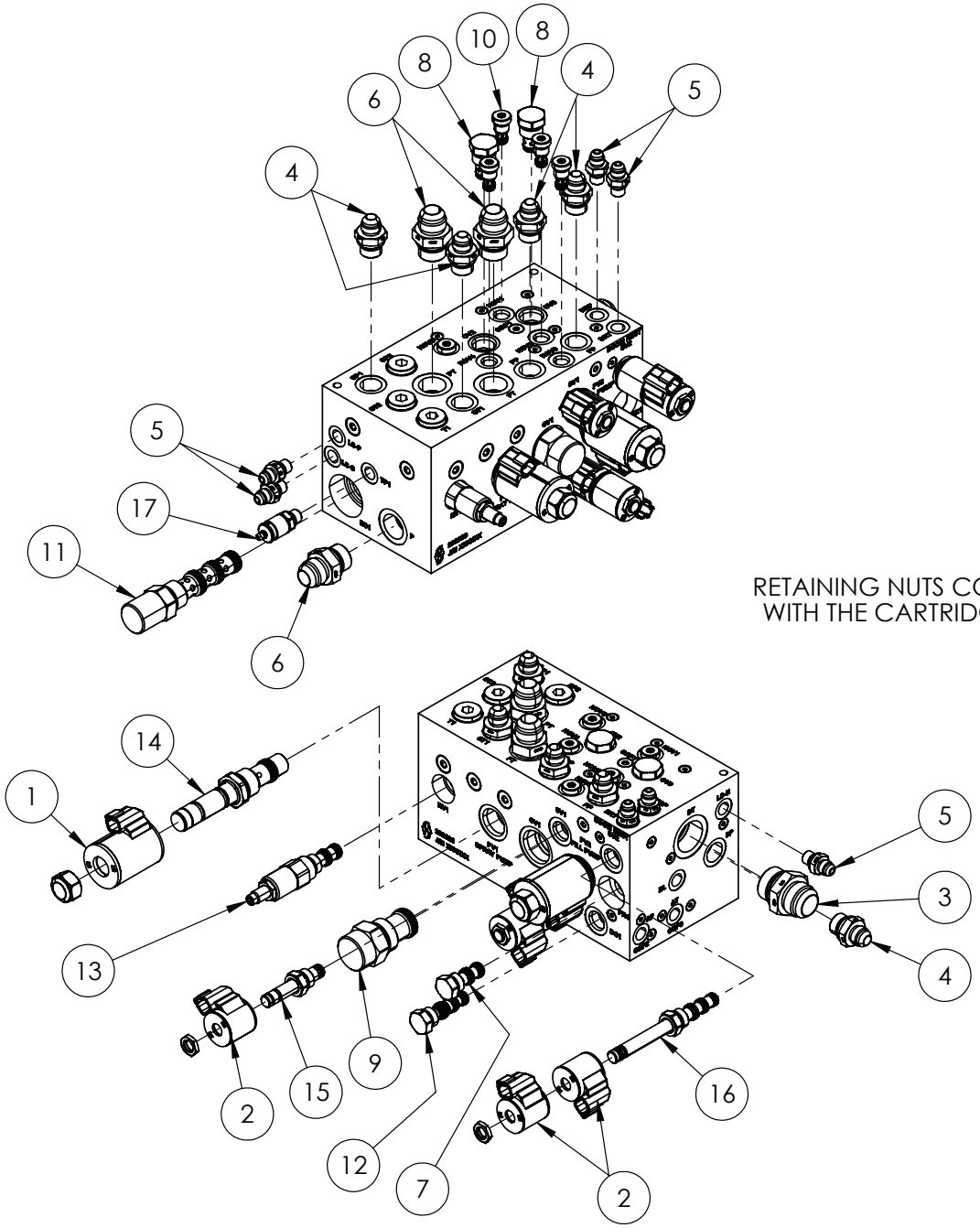

RETAINING NUTS COME WITH THE CARTRIDGE.

IF DESCRIPTION PREFIX IS ASSEMBLY DRAWING ONLY OR PRODUCTION DRAWING ONLY THE ITEM IS NOT FOR SALE			
ITEM	PART NUMBER	DESCRIPTION	QTY
1	GA3000578	COIL, 12V DC, OILPATH, 4303212	2
2	GA3000579	COIL, 12V DC, OILPATH, 4303612	5
3	GA3500590	HYDRAULIC ADAPTOR NIPPLE, 1" BSPP X 1 5/16" JIC, S74D-1621	1
4	GA3500303	HYDRAULIC ADAPTOR NIPPLE, 1/2" BSPP TO 3/4" JIC	5
5	GA3500544	HYDRAULIC ADAPTOR NIPPLE, 1/4" BSP O-RING X 9/16" JIC, S74-0409	5
6	GA3500711	HYDRAULIC ADAPTOR NIPPLE, 3/4" BSP O-RING X 1 1/16" JIC, S74-1217	3
7	GA3501268	HYDRAULIC CARTRIDGE, CAVITY PLUG, OILPATH, CP08-30-N	1
8	GA3500884	HYDRAULIC CARTRIDGE, CHECK VALVE, OILPATH, CV10-20-0-N-05	2
9	GA3500899	HYDRAULIC CARTRIDGE, CHECK VALVE, OILPATH, CV16-20T-0-N-150	1
10	GA3500914	HYDRAULIC CARTRIDGE, CHECK VALVE, OILPATH, HVC06-20-0-U-05	4
11	GA3500905	HYDRAULIC CARTRIDGE, COMPENSATOR, PRIORITY VALVE, OILPATH, EC12-43-0-N-160-0.9	1
12	GA3501110	HYDRAULIC CARTRIDGE, DOUBLE PILOT CHECK VALVE, OILPATH, DC08-40-0-N-25	1
13	GA3500869	HYDRAULIC CARTRIDGE, PRESSURE REDUCING VALVE, HYDRAFORCE, PRE-SET 35 BAR, RV50-26A-0-P-50/M220	1
14	GA3501076	HYDRAULIC CARTRIDGE, PROPORTIONAL FLOW REGULATOR VALVE, HYDRAFORCE, PV72-20A-0-N-00	2
15	GA3500912	HYDRAULIC CARTRIDGE, SOLENOID VALVE, OILPATH, SV08-26-0-N-00	1
16	GA3500913	HYDRAULIC CARTRIDGE, SOLENOID VALVE, OILPATH, SV08-47C-0-N-00	2
17	GA3500133	HYDRAULIC COUPLING, EASY TEST POINT, 1/4" BSPP	1
GA3501206 GOLDACRES		HYDRAULIC MANIFOLD ASSEMBLY, CHASSIS CONTROL, G4 S2, MY24	REV 00.C

Hydraulic Pressure Filter, Hydac

REPLACEMENT PARTS			
ITEM	PART NUMBER	DESCRIPTION	QTY
A	GA3501767	KIT, REPAIR, SUIT, HYDAC HYDRAULIC PRESSURE FILTER, GA3501207	-

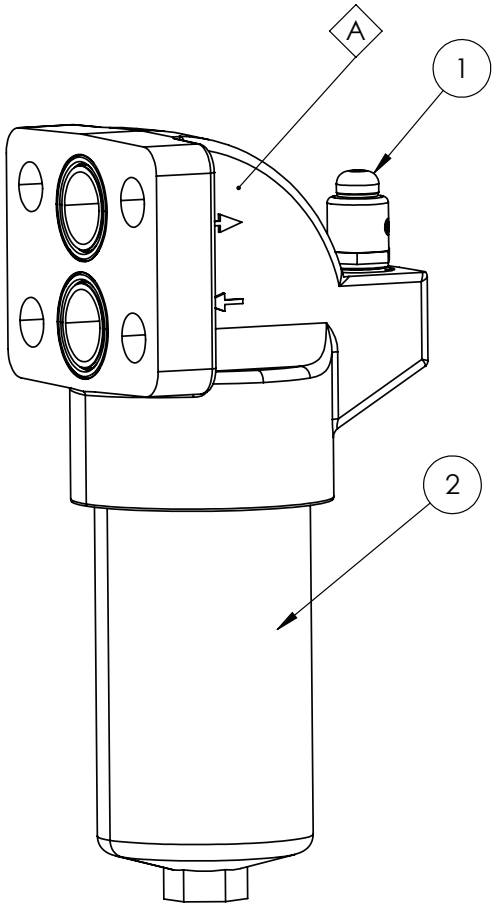

IF DESCRIPTION PREFIX IS ASSEMBLY DRAWING ONLY OR PRODUCTION DRAWING ONLY THE ITEM IS NOT FOR SALE			
ITEM	PART NUMBER	DESCRIPTION	QTY
1	GA3501115	CLOGGING INDICATOR, HYDRAULIC PRESSURE FILTER, PRO S2, HYDAC, 316885	1
2	GA3501114	FILTER ELEMENT, HYDRAULIC PRESSURE FILTER, PRO, S2, HYDAC, 1250491	1
GA3501207 GOLDACRES		HYDRAULIC PRESSURE FILTER ASSEMBLY, 10 MICRON, 4 BOLT FLANGE MOUNT, 6 BAR BYPASS, MANUAL CLOGGING INDICATOR, DF240, HYDAC	REV

Pneumatic Manifold

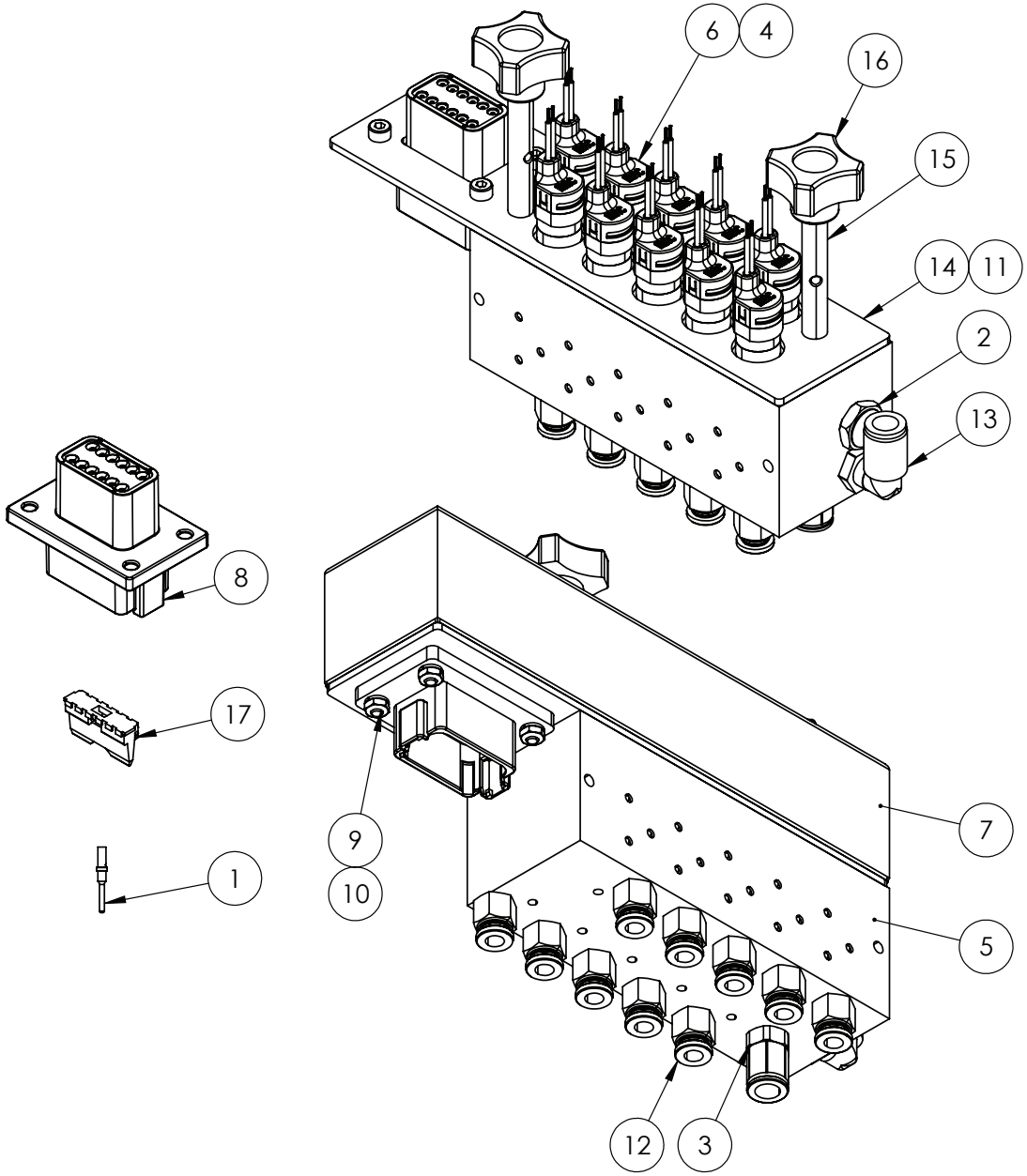

IF DESCRIPTION PREFIX IS ASSEMBLY DRAWING ONLY OR PRODUCTION DRAWING ONLY THE ITEM IS NOT FOR SALE			
1	GA5061200	PIN, MALE, SOLID, NICKEL, NUMBER 20, DEUTSCH	12
2	GA5071207	BREATHER, SILENCER, 1/4 BUTTON	1
3	GA3501188	PLUG, 1/4 BSPP, INTERNAL HEX	1
4	GA5074425	O-RING, NITRILE, BULLET VALVE 3/2, GA7000082	10
5	GA7000081	MANIFOLD, 10 SECTION, BLACK, GA7000029	1
6	GA7000082	PNEUMATIC VALVE, 3/2 BULLET, WITH DIODE AND LED, MAC	10
7	GA5074405	COVER, PNEUMATIC MANIFOLD, 10 SECTION, GA7000029	1
8	GA3000878	RECEPTACLE, 12 PINS, DT FLANGE MOUNT, DEUTSCH, DT04-12PA-L012	1
9	GA5049025	NUT M4 NYLOC SS	4
10	GA5011363	SHCS M4 X 16 GR12.9 ZP	4
11	GA5074410	GASKET, MANIFOLD COVER, 1.5mm RUBBER, GA7000029	1
12	GA5071195	STRAIGHT ADAPTOR PUSH IN 6mm X 1/8 MALE THREAD	10
13	GA5052690	PNEUMATIC FITTING, ELBOW, 90 DEGREE, 1/4 BSP MALE X 8mm PUSH IN TYPE, METAL	1
14	GA5074415	RETAINER PLATE, BULLET VALVE, GA7000029	1
15	GA5074420	ROD, COVER MOUNT, BULLET VALVE MANIFOLD, M6 MALE X M6 FEMALE, GA7000029	2
16	GA0500124	STAR BOLT, M6 X 10mm MALE	2
17	GA5070590	WEDGE LOCK, GREEN, 12 WAY SUIT PINS, DEUTSCH	1
GA7000029 GOLDACRES		PNEUMATIC MANIFOLD, RAPID FIRE, 10 SECTION, BULLET VALVE	REV 00.C

Hydraulic Manifold Assembly, Boom Control (Front View)

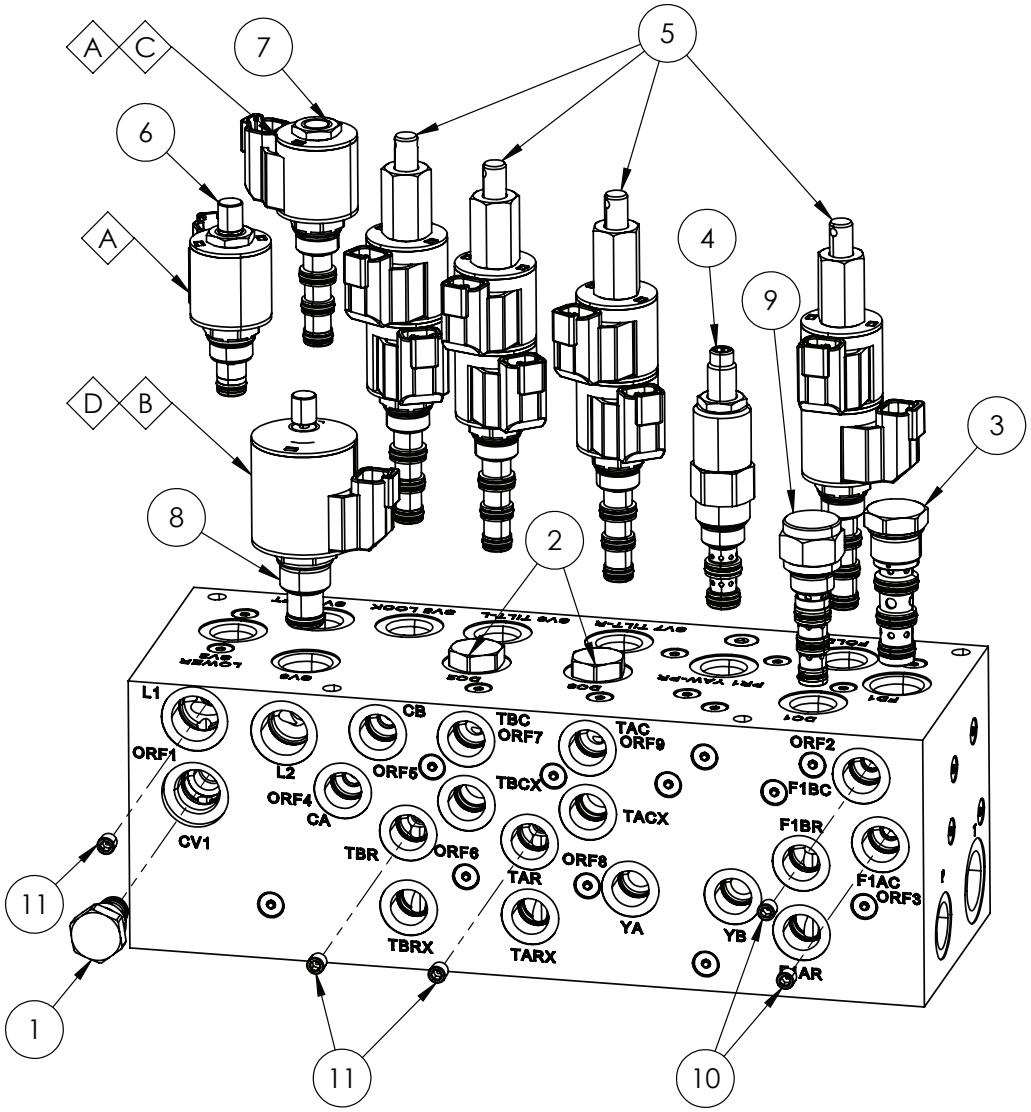

FRONT VIEW

REPLACEMENT PARTS			
ITEM	PART NUMBER	DESCRIPTION	QTY
A	GA3000579	COIL, 12V DC, OILPATH, 4303612	-
B	GA3000577	COIL, 12V DC, OILPATH, 4303712	-
C	GA3500894	SEAL KIT, OILPATH, SK08-4N-MMM	-
D	GA3500889	SEAL KIT, OILPATH, SK10-2N-M	-

IF DESCRIPTION PREFIX IS ASSEMBLY DRAWING ONLY OR PRODUCTION DRAWING ONLY THE ITEM IS NOT FOR SALE			
ITEM	PART NUMBER	DESCRIPTION	QTY
1	GA3500923	HYDRAULIC CARTRIDGE, CHECK VALVE, OILPATH, CV08-20-0-N-04	2
2	GA3501110	HYDRAULIC CARTRIDGE, DOUBLE PILOT CHECK VALVE, OILPATH, DC08-40-0-N-25	2
3	GA3500886	HYDRAULIC CARTRIDGE, FLOW DIVIDER, OILPATH, FD50-45-0-N-22	1
4	GA3500869	HYDRAULIC CARTRIDGE, PRESSURE REDUCING VALVE, HYDRAFORCE, PRE-SET 35 BAR, PR08-32A-0-N-12/M35	1
5	GA3500893	HYDRAULIC CARTRIDGE, SOLENOID VALVE, DCV, OILPATH, SV08-47DM-0-N-00	4
6	GA3501106	HYDRAULIC CARTRIDGE, SOLENOID VALVE, OILPATH, SV08-22M-0-N-00	1
7	GA3501107	HYDRAULIC CARTRIDGE, SOLENOID VALVE, OILPATH, SV08-43-0-N-00	1
8	GA3500888	HYDRAULIC CARTRIDGE, SOLENOID VALVE, OILPATH, SV10-28M-0-N-00	1
9	GA3501845	HYDRAULIC CARTRIDGE, DUAL PILOT CHECK VALVE, BUCHER, PDCV-08-N1-3-0	1
10	GA3500849	PLUG, ORIFICE, 1/16" NPT X 0.8mm	2
11	GA3500853	PLUG, ORIFICE, 1/16" NPT X 1.5mm	3
GA3501208 GOLDACRES		HYDRAULIC MANIFOLD ASSEMBLY, TRITECH BOOM CONTROL, G4 2024	REV 00.B

Hydraulic Manifold Assembly, Boom Control (Rear View)

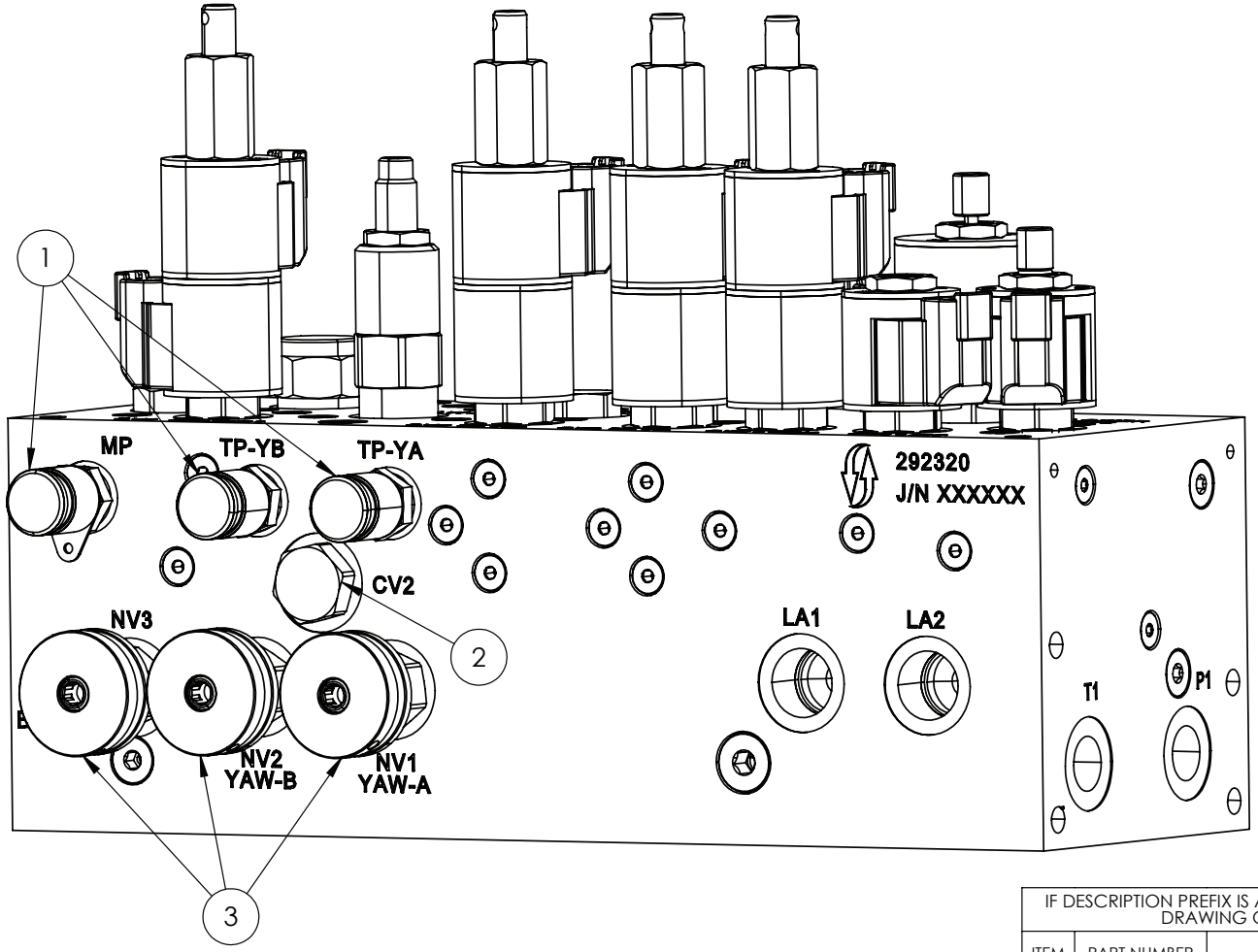

REAR VIEW

IF DESCRIPTION PREFIX IS ASSEMBLY DRAWING ONLY OR PRODUCTION DRAWING ONLY THE ITEM IS NOT FOR SALE			
ITEM	PART NUMBER	DESCRIPTION	QTY
1	GA3500133	HYDRAULIC COUPLING, EASY TEST POINT, 1/4" BSPP	3
2	GA3500923	HYDRAULIC CARTRIDGE, CHECK VALVE, OILPATH, CV08-20-0-N-04	1
3	GA3501792	VALVE, CONTROL, MANUAL, HYDRAULIC, ADJUSTABLE, NV08-20B-0-N	3
GA3501208 GOLDACRES		HYDRAULIC MANIFOLD ASSEMBLY, TRITECH BOOM CONTROL, G4 2024	REV 00.B

Hydraulic Manifold, Boom Control, Function Table

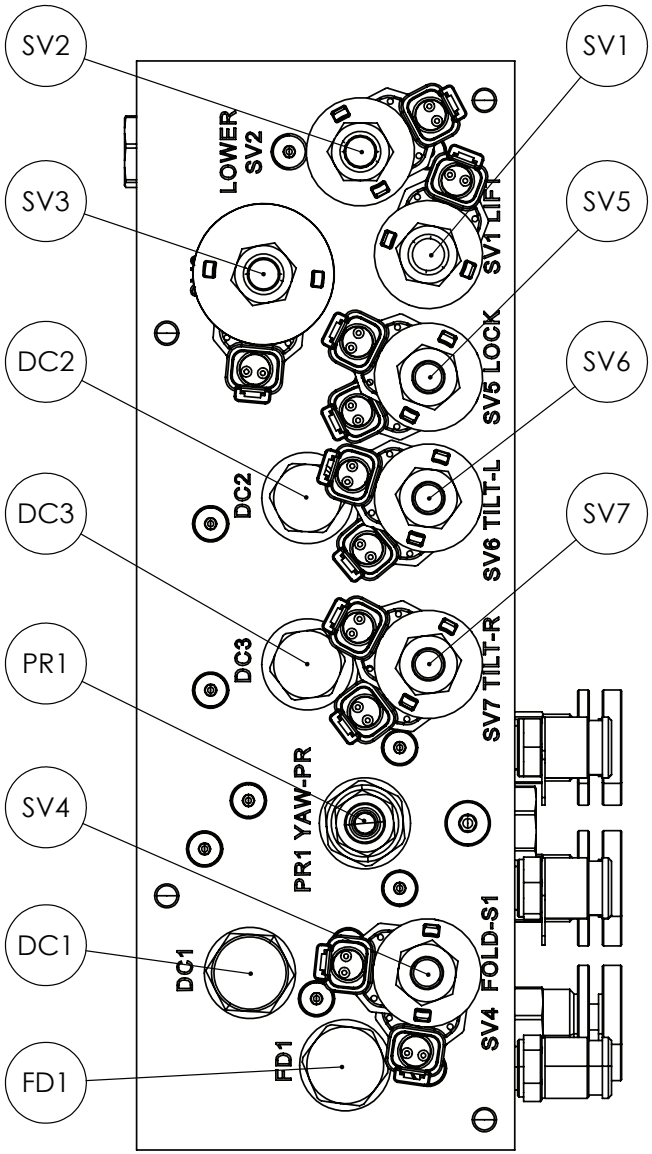

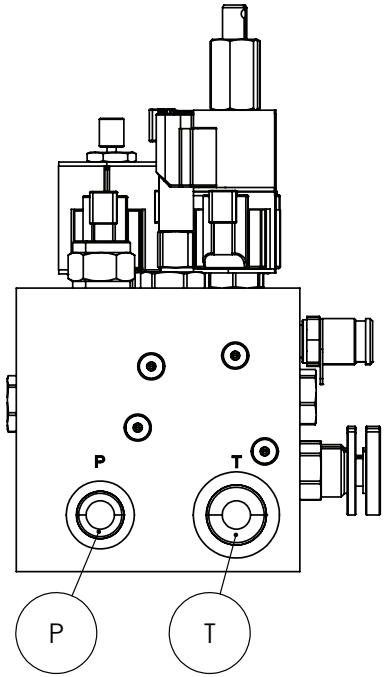

FUNCTION TABLE	
SV1	SV08-43 - BOOM LIFT
SV2	SV08-22M - BOOM LOWER
SV3	SV10-28M - BOOM LIFT/LOWER ACCUMULATORS
SV4	SV08-47DM - BOOM FOLD
SV5	SV08-47DM - CENTRE LEVEL
SV6	SV08-47DM - BOOM TILT LEFT
SV7	SV08-47DM - BOOM TILT RIGHT
DC1	PDCV-08 - CARTRIDGE/ CHECK VALVE - BOOM FOLD
DC2	DC08-40 - CARTRIDGE / CHECK VALVE - BOOM TILT LEFT
DC3	DC08-40 - CARTRIDGE / CHECK VALVE - BOOM TILT RIGHT
FD1	FD50-44/45 - FLOW DIVIDER - BOOM FOLD
PR1	PR08-32 - HYDRAULIC YAW
P	XRT LOAD SENSE DELIVERY PORT - LEFT
T	XRT LOAD SENSE DELIVERY PORT - RIGHT

GA3501208 GOLDACRES	HYDRAULIC MANIFOLD ASSEMBLY, TRITECH BOOM CONTROL, G4 2024	REV 00.B

Continue Over Page

Hydraulic Manifold, Boom Control, Function Table

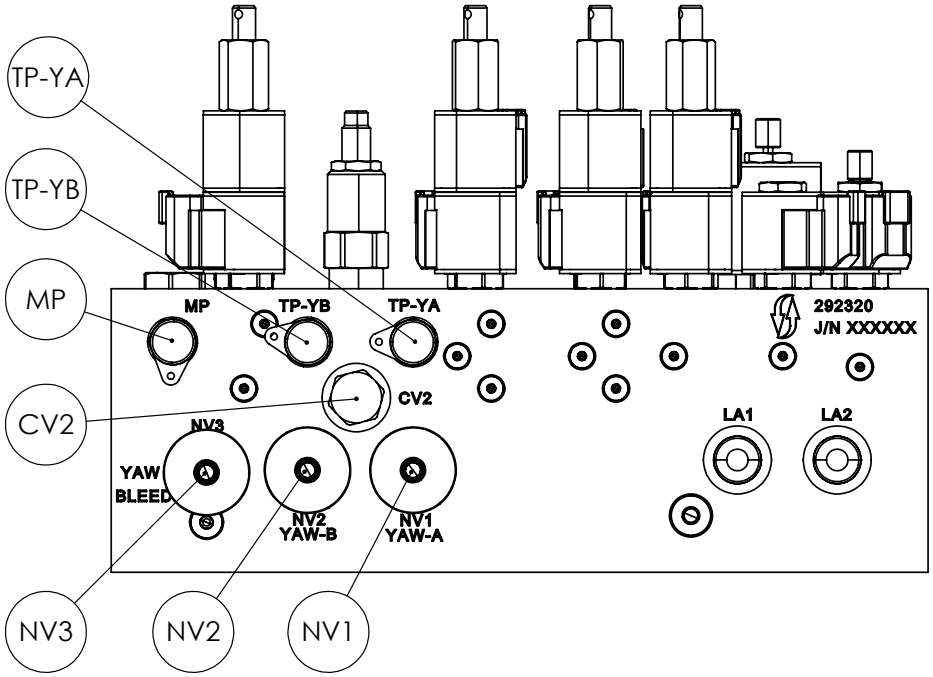

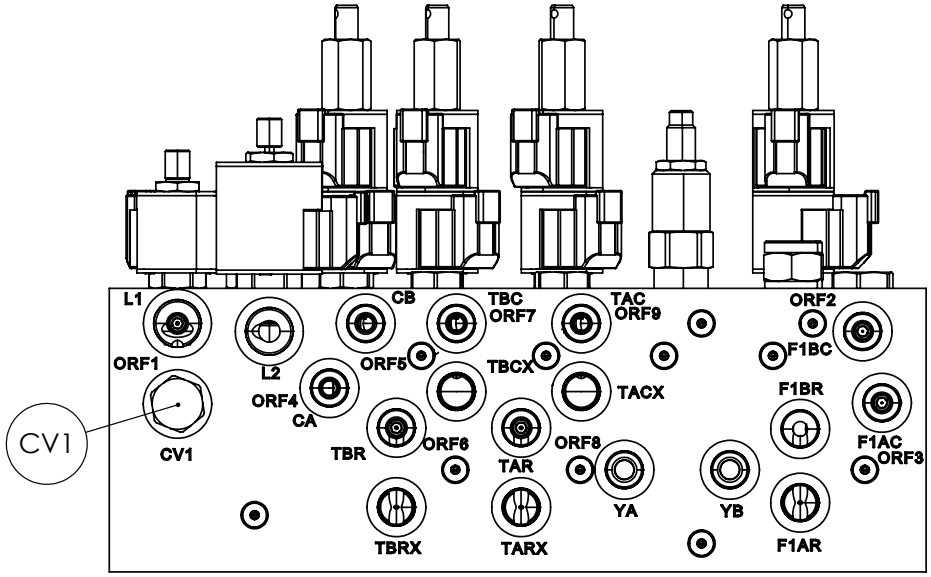

FUNCTION TABLE	
CV1	CV08-20 - HYDRAULIC CARTRIDGE/CHECK VALVE - BOOM LIFT/LOWER
CV2	CV08-20 - HYDRAULIC CARTRIDGE/CHECK VALVE - HYDRAULIC YAW
NV1	NV08-20B - HYDRAULIC YAW A - LEFT
NV2	NV08-20B - HYDRAULIC YAW B - RIGHT
NV3	NV08-20B - HYDRAULIC YAW - BLEED
MP	SMK20-G1/4" - TEST POINT
TP-YA	SMK20-G1/4" - TEST POINT - YAW - LEFT
TP-YB	SMK20-G1/4" - TEST POINT - YAW - RIGHT

GA3501208 GOLDACRES	HYDRAULIC MANIFOLD ASSEMBLY, TRITECH BOOM CONTROL, G4 2024	REV 00.B

Hydraulic Manifold, Boom Control, Factory Set Positions

FACTORY SET POSITIONS OF MANUAL OVERRIDES

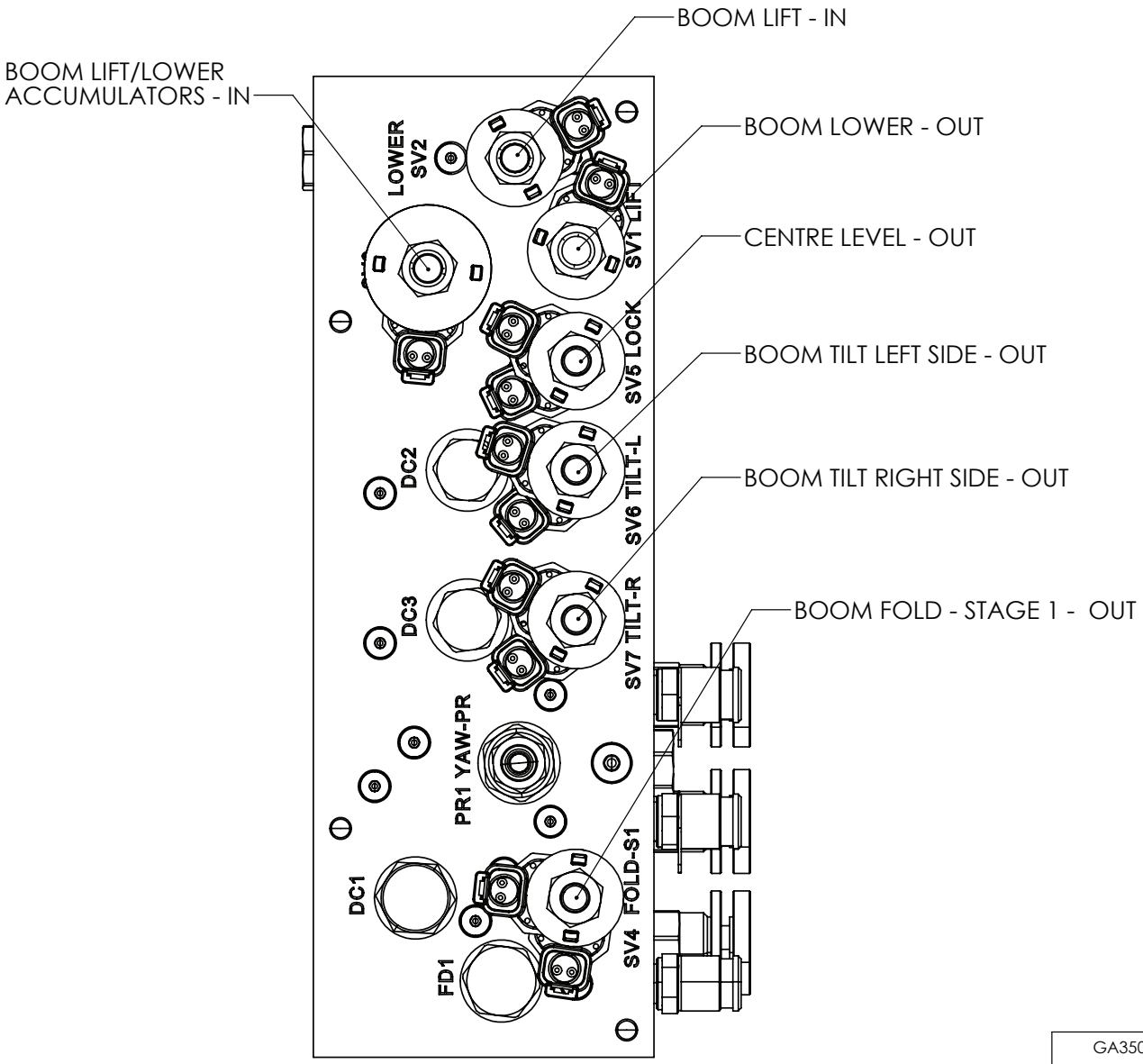

GA3501208 GOLDACRES	HYDRAULIC MANIFOLD ASSEMBLY, TRITECH BOOM CONTROL, G4 2024	REV 00.B

Hydraulic Manifold, Raven XRT Ultraglide

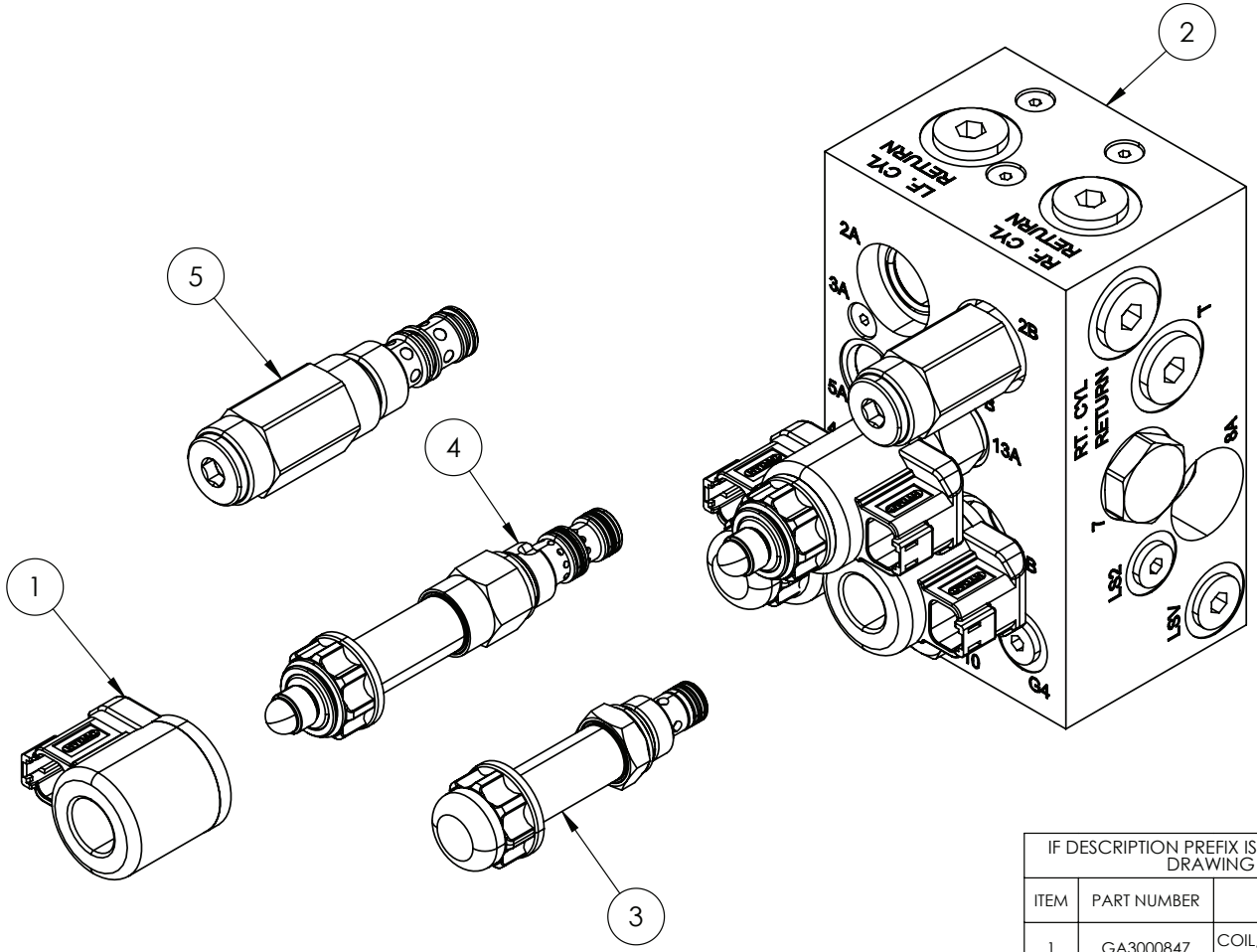

IF DESCRIPTION PREFIX IS ASSEMBLY DRAWING ONLY OR PRODUCTION DRAWING ONLY THE ITEM IS NOT FOR SALE			
ITEM	PART NUMBER	DESCRIPTION	QTY
1	GA3000847	COIL, 12V DC, DEUSTCH, CONNECTOR, XRT, 13340002118	4
2	GA3000385	VALVE, HYDRAULIC, RAVEN XRT ULTRAGLIDE, LOAD SENSE, 334-0235-002	1
3	GA5076857	VALVE, CARTRIDGE HYDRAULIC BLOCKER DBL 08, RAVEN, 3340002107	2
4	GA5076856	VALVE, CARTRIDGE HYDRAULIC PROPORTIONAL RDC/RLVG 08, RAVEN ULTRAGLIDE, 13340002106	2
5	GA5076858	VALVE, CARTRIDGE HYDRAULIC SEQUENCE 10, RAVEN, 3340002108	2
GA3000385 GOLDACRES		VALVE, HYDRAULIC, RAVEN XRT ULTRAGLIDE, LOAD SENSE, 334-0235-002	REV 00.C

Hydraulic Manifold, Bi-Fold, Add on Module

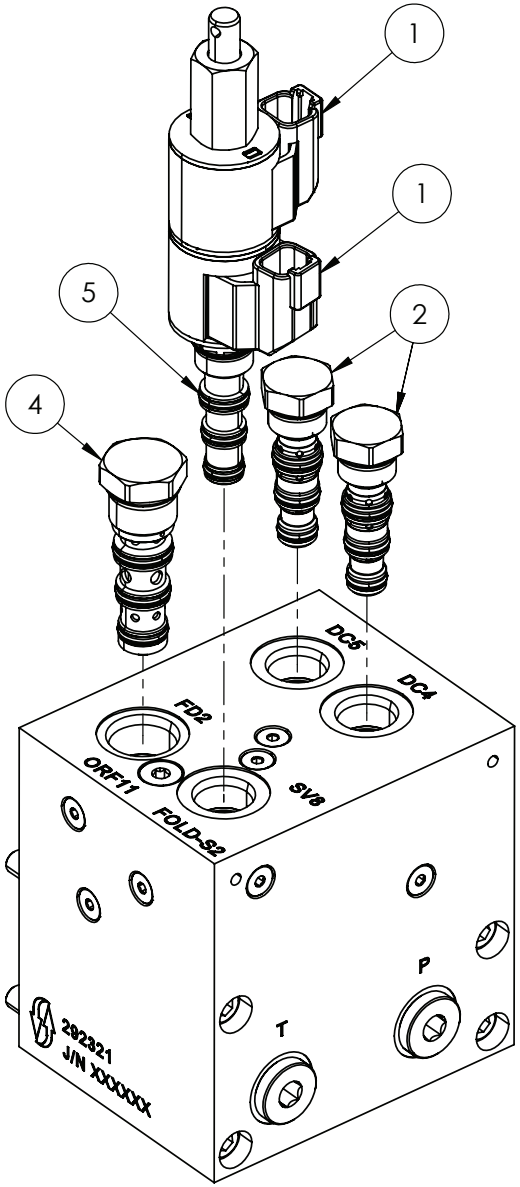

IF DESCRIPTION PREFIX IS ASSEMBLY DRAWING ONLY OR PRODUCTION DRAWING ONLY THE ITEM IS NOT FOR SALE			
ITEM	PART NUMBER	DESCRIPTION	QTY
1	GA3000579	COIL, 12V DC, OILPATH, 4303612	2
2	GA3501110	HYDRAULIC CARTRIDGE, DOUBLE PILOT CHECK VALVE, OILPATH, DC08-40-0-N-25	2
4	GA3501664	HYDRAULIC CARTRIDGE, FLOW DIVIDER, OILPATH, FD50-44-0-N-11	1
5	GA3501109	HYDRAULIC CARTRIDGE, SOLENOID VALVE, OILPATH, SV08-47DM-0-N-00	1
GA3501209 GOLDACRES		HYDRAULIC MANIFOLD ASSEMBLY, BI FOLD, ADD ON MODULE, G4 2024	REV 00

Hydraulic Cylinder, Lift

REPLACEMENT PARTS			
ITEM	PART NUMBER	DESCRIPTION	QTY
A	GA3501576	SEAL KIT, HYDRAULIC CYLINDER, SUITS GA3500593, "BICELLI GECO" BRAND ONLY	1
	GA5052731	SEAL KIT, SUIT 3" BORE X 2 1/2" ROD, SUITS GA3500593, "HYPOWER" BRAND ONLY	1

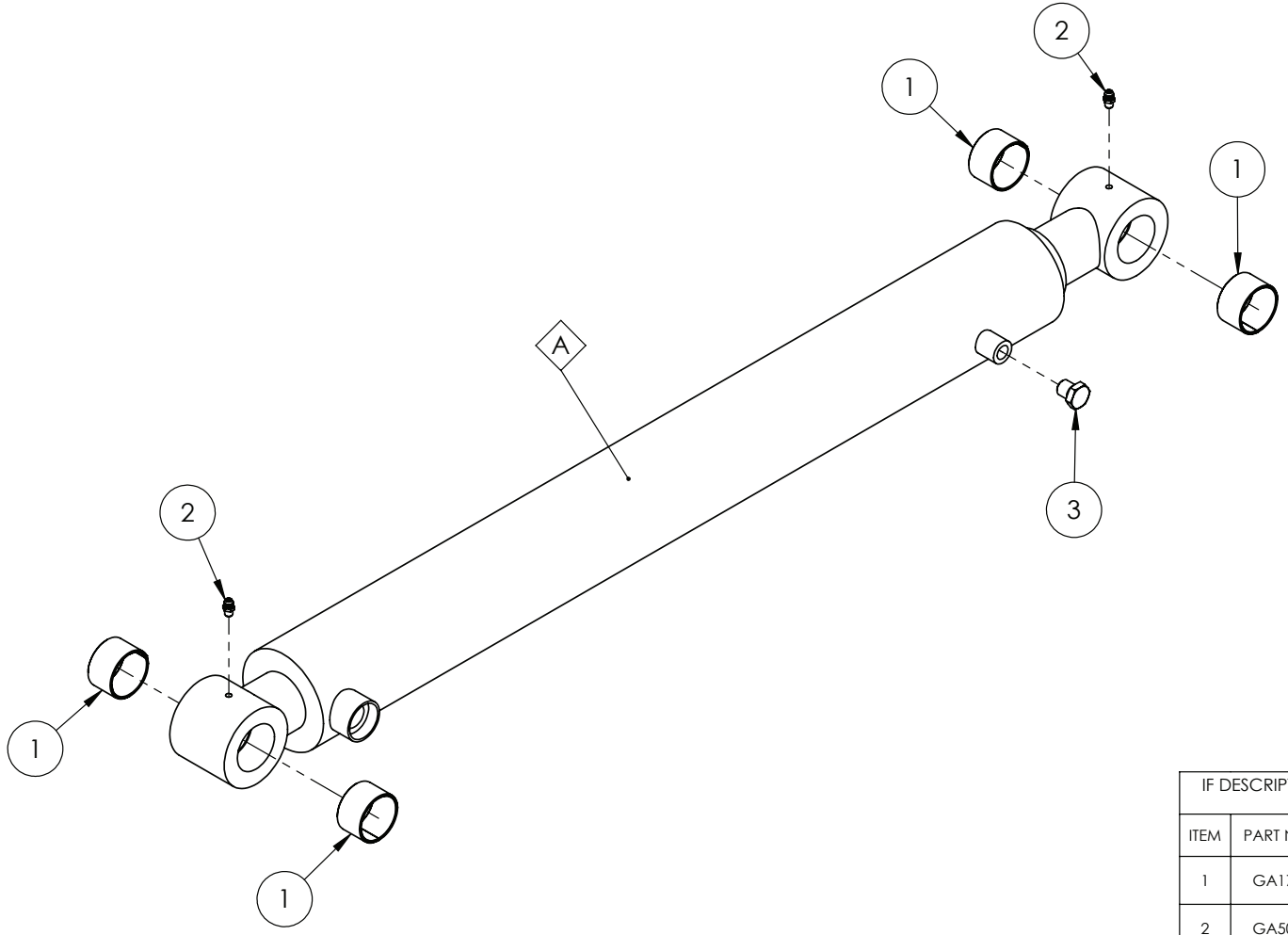

IF DESCRIPTION PREFIX IS ASSEMBLY DRAWING ONLY OR PRODUCTION DRAWING ONLY THE ITEM IS NOT FOR SALE			
ITEM	PART NUMBER	DESCRIPTION	QTY
1	GA1700027	BEARING, GLACIER BUSH, 1 1/2" ID X 1" LONG	4
2	GA5012203	GREASE NIPPLE 1/4" UNF SHORT	2
3	GA3500299	HYDRAULIC ADAPTOR, PLUG, 1/4" BSPP MALE, S73-04	1
GA3500593 GOLDACRES		HYDRAULIC CYLINDER, DISPLACEMENT, 3" BORE, 2.5" ROD, 26" STROKE SUIT 1.5" PINS	REV 01

Hydraulic Cylinder, Yaw

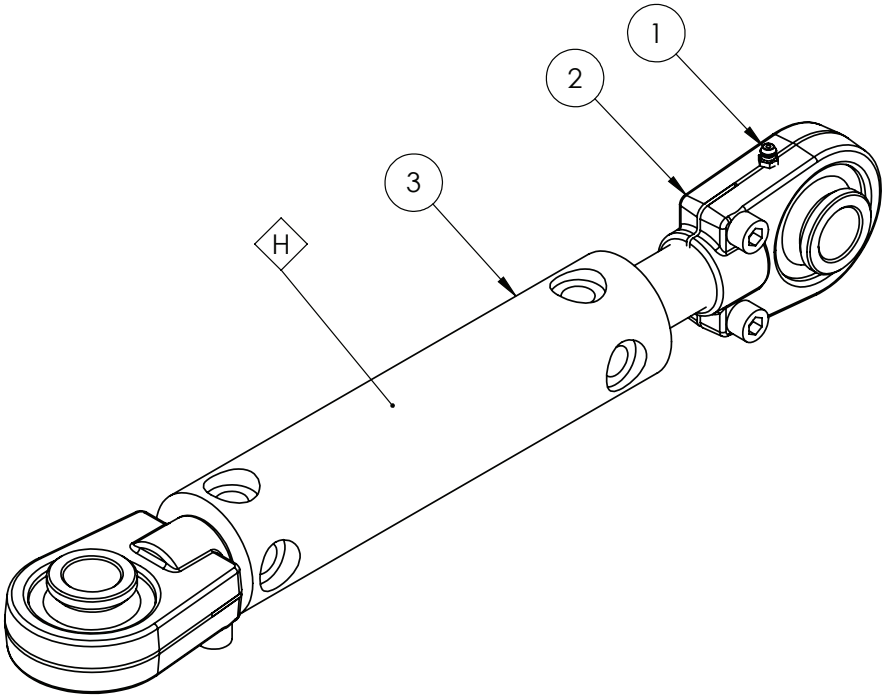

REPLACEMENT PARTS			
ITEM	PART NUMBER	DESCRIPTION	QTY
A	GA5052965	BEARING, ROSE END HOUSING, M28 SCREW ON, SUIT HYDRAULIC CYLINDER & DELTA LINK, INC. BUSHES	1
B	GA5050450	GREASE NIPPLE, 6mm	1
C	GA5021925	SMALL BEARING BUSH, SUIT SCREW ON ROSE END, HYPOWER, R-10424	2
D	GA5006131	SHCS M10 X 30 SS A2-70	2
E	GA5067605	BEARING, RADIAL SPHERICAL PLAIN, 30mm ID X 55mm OD X 32mm THICK, GEG 30 ES 2RS	1
F	GA5067610	CIRCLIP, SUIT BEARING SCREW ON ROSE END, RTW 55	2
G	GA5052966	SALES KIT, BEARING KIT, SUIT SCREW ON ROSE END, CYLINDERS AND DELTA LINKS	-
H	GA5074330	SEAL KIT, SUIT, HYDRAULIC YAW CYLINDER, 2" X 1.25", MOTUS GA5060817	-

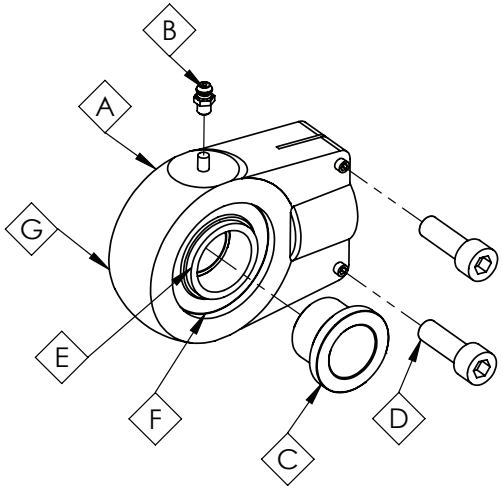

IF DESCRIPTION PREFIX IS ASSEMBLY DRAWING ONLY OR PRODUCTION DRAWING ONLY THE ITEM IS NOT FOR SALE			
ITEM	PART NUMBER	DESCRIPTION	QTY
1	GA5012203	GREASE NIPPLE 1/4" UNF SHORT	2
2	GA5052965	HEAVY DELTA LINK ROSE END	2
3	GA5060817	HYDRAULIC CYLINDER, BORE 2", ROD 1.25", STROKE 117.5mm	1
GA5060817 GOLDACRES		HYDRAULIC CYLINDER, BORE 2", ROD 1.25", STROKE 117.5mm	REV 00

Hydraulic Cylinder, Tilt

REPLACEMENT PARTS			
ITEM	PART NUMBER	DESCRIPTION	QTY
A	GA4572560	TILT CYLINDER ADJUSTMENT SCREW, HD, SUIT GA5065051	-
B	GA5010963	NUT, 1 1/4 UNF, 12 TPI ZP LOCK NUT, 1 7/8" AF	-
C	GA4572565	ROSE END PIVOT BUSH, WIDE, SUIT, TILT RAM	-
D	GA5006129	SHCS M10 X 30 GR12.9 ZP	-
E	GA3501316	SEAL KIT, SUIT, HYDRAULIC CYLINDER, 3.5" X 1.75" ROD, "MOTUS', GA5065051	-
F	GA5079142	BEARING, ROSE END HOUSING, SUIT, HYDRAULIC CYLINDER, GA5065051, "MOTUS" BRAND ONLY	-

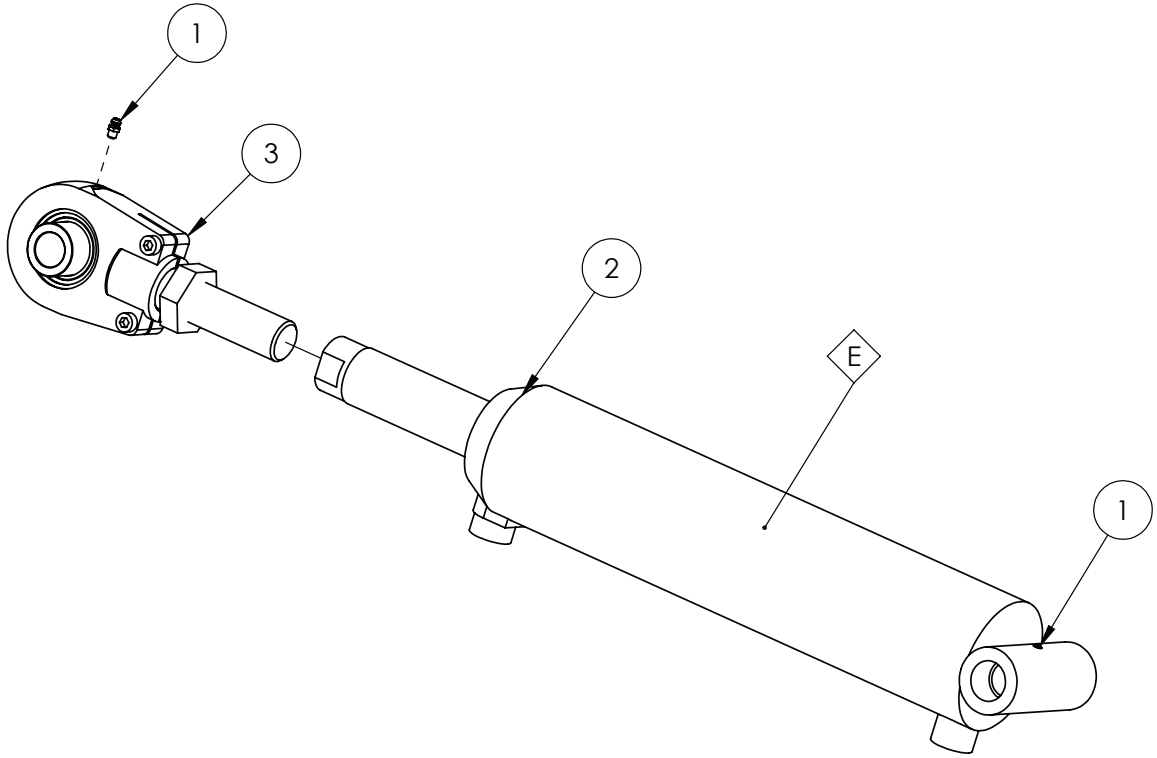

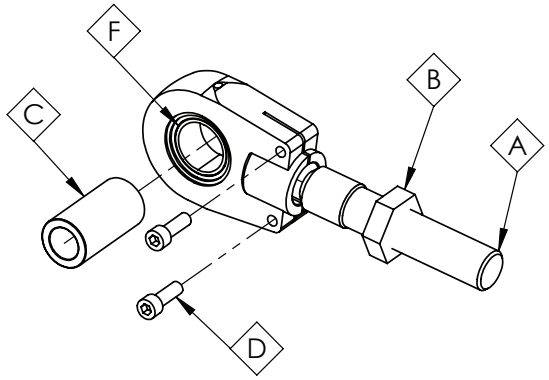

IF DESCRIPTION PREFIX IS ASSEMBLY DRAWING ONLY OR PRODUCTION DRAWING ONLY THE ITEM IS NOT FOR SALE			
ITEM	PART NUMBER	DESCRIPTION	QTY
1	GA5012203	GREASE NIPPLE 1/4" UNF SHORT	2
2	GA5065051	HYDRAULIC CYLINDER, BORE 3.5", ROD 1.75", STROKE 5"	1
3	GA5052761	HYDRAULIC TILT CYLINDER ADJUSTING ROD END, LARGE BALL END WITH NUT TO SUIT 3 1/2 X 5 TILT RAM GA5065051	1
GA5065051 GOLDACRES		HYDRAULIC CYLINDER, BORE 3.5", ROD 1.75", STROKE 5"	REV 00

Hydraulic Cylinder, Fold

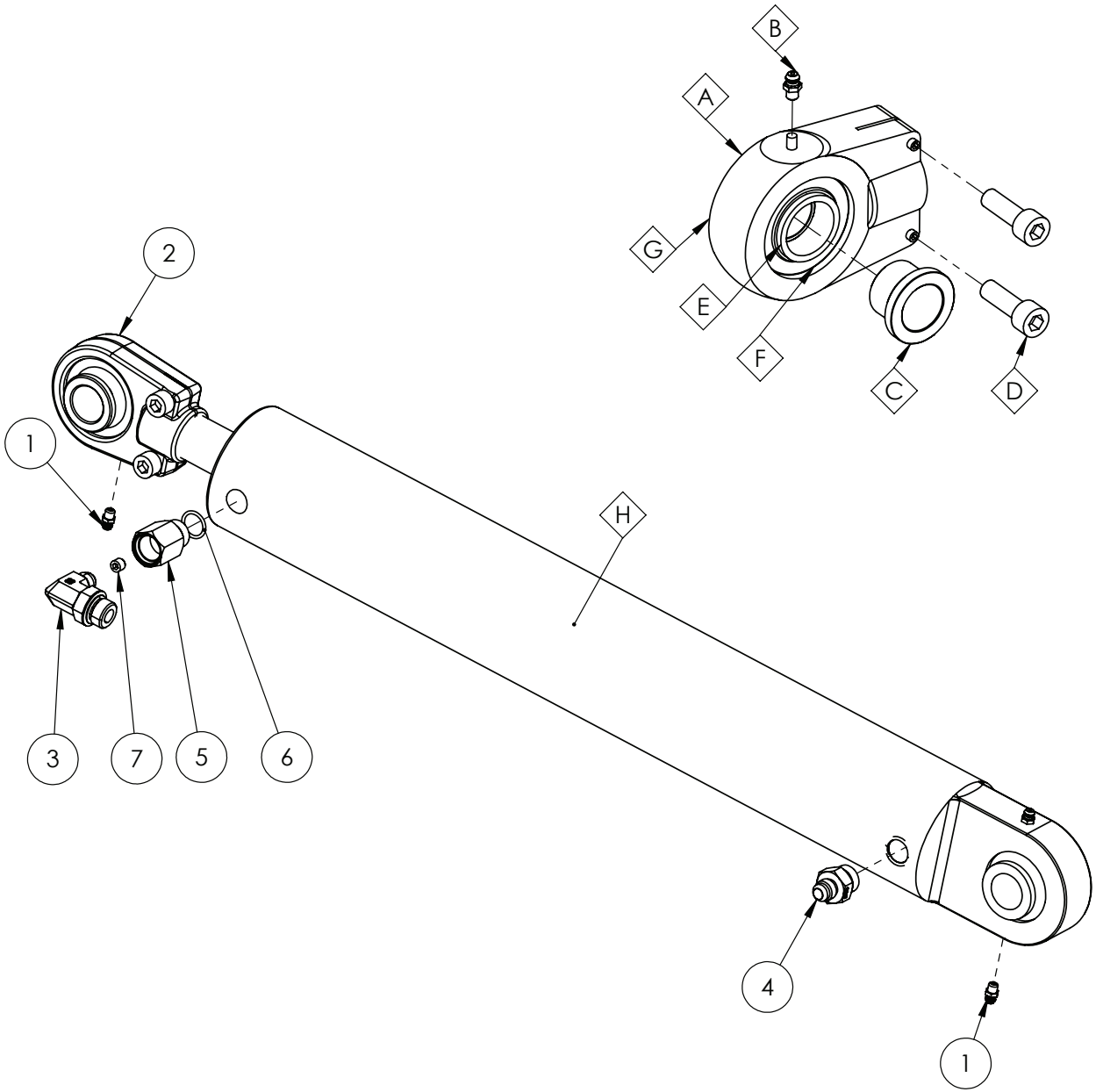

REPLACEMENT PARTS			
ITEM	PART NUMBER	DESCRIPTION	QTY
A	GA5052965	BEARING, ROSE END HOUSING, M28 SCREW ON, SUIT HYDRAULIC CYLINDER & DELTA LINK, INC. BUSHES	-
B	GA5050450	GREASE NIPPLE, 6mm	-
C	GA5021925	SMALL BEARING BUSH, SUIT SCREW ON ROSE END, HYPOWER, R-10424	-
D	GA5006131	SHCS M10 X 30 SS A2-70	-
E	GA5067605	BEARING, RADIAL SPHERICAL PLAIN, 30mm ID X 55mm OD X 32mm THICK, GEG 30 ES 2RS	-
F	GA5067610	CIRCLIP, SUIT BEARING SCREW ON ROSE END, RTW 55	-
G	GA5052966	SALES KIT, BEARING KIT, SUIT SCREW ON ROSE END, CYLINDERS AND DELTA LINKS	-
H	GA3501761	SEAL KIT, SK300125, SUIT, HYDRAULIC CYLINER, GA5018538 & GA5060818, "MOTUS" BRAND ONLY	-

IF DESCRIPTION PREFIX IS ASSEMBLY DRAWING ONLY OR PRODUCTION DRAWING ONLY THE ITEM IS NOT FOR SALE			
ITEM	PART NUMBER	DESCRIPTION	QTY
1	GA5012203	GREASE NIPPLE, SHORT, 1/4 UNF, MACH0207	3
2	GA5052965	HEAVY DELTA LINK ROSE END	1
3	GA3500700	HYDRAULIC ADAPTOR, ELBOW, 90 DEGREE, 9/16" JIC MALE X 3/4" UN MALE O-RING, S91-0912	1
4	GA3500147	HYDRAULIC ADAPTOR, NIPPLE, 9/16" JIC MALE X 3/4" UN MALE O-RING, S90-0912	1
5	GA4551930	MACHINED HYDRAULIC FITTING, 3/4" UN O-RING MALE X 3/4" UN O-RING FEMALE, SUIT INTERNAL ORIFICE PLUG.	1
6	GA5078123	O-RING UNO 3/4", ROD-UN12	1
7	GA3500851	PLUG, ORIFICE, 1/16 NPT X 1.0mm	1
GA5018538 GOLDACRES		HYDRAULIC CYLINDER, BORE 3", ROD 1.25", STROKE 18"	REV 01.B

Hydraulic Cylinder, Centre Level

REPLACEMENT PARTS			
ITEM	PART NUMBER	DESCRIPTION	QTY
A	GA3501580	SEAL KIT, SUIT, HYDRAULIC CYLINDER, GA3500477, "BICELLI GECO" BRAND ONLY, 6325.SK	-

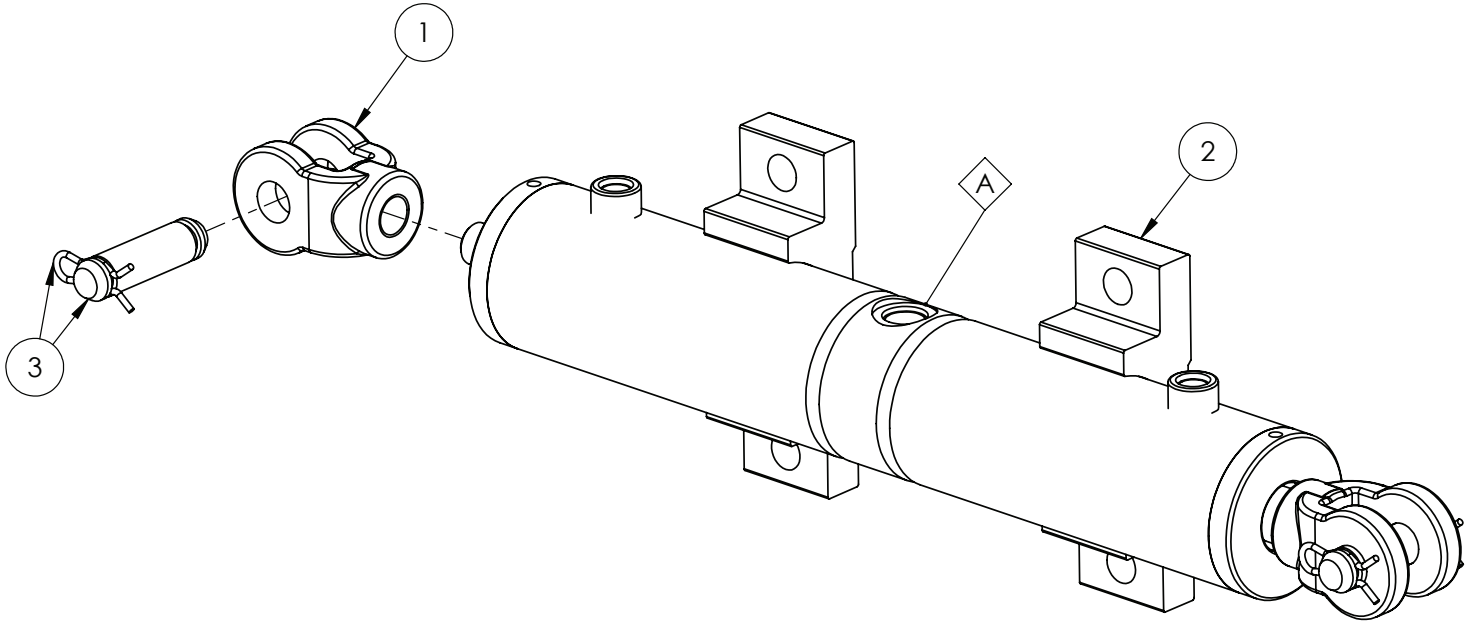

IF DESCRIPTION PREFIX IS ASSEMBLY DRAWING ONLY OR PRODUCTION DRAWING ONLY THE ITEM IS NOT FOR SALE			
ITEM	PART NUMBER	DESCRIPTION	QTY
1	GA5026493	CLEVIS, 72X36X46, SUIT, HYDRAULIC CYLINDER, "BICELLI GECO", GA3500477	2
2	GA3501581	FOOT PAD, HYDRAULIC CYLINDER, CENTRE LEVEL, GA3500477, "BICELLI GECO" BRAND ONLY	2
3	GA3501582	PIN, 3/4" X 14mm, HYDRAULIC CYLINDER, GA3500477, "BICELLI GECO", BRAND ONLY	2
GA3500477 GOLDACRES		HYDRAULIC CYLINDER, CENTRE LEVEL 2016	REV 00.B

Hydraulic Cylinder, Boom Rest

REPLACEMENT PARTS			
ITEM	PART NUMBER	DESCRIPTION	QTY
A	GA3501788	SEAL KIT, SUIT, HYDRAULIC CYLINDER, GA5069110, "BICELLI GECO" BRAND ONLY	-
B	GA3501793	ROD ASSEMBLY, SUIT, HYDRAULIC CYLINDER, GA5069110, "BICELLI GECO" BRAND ONLY	-

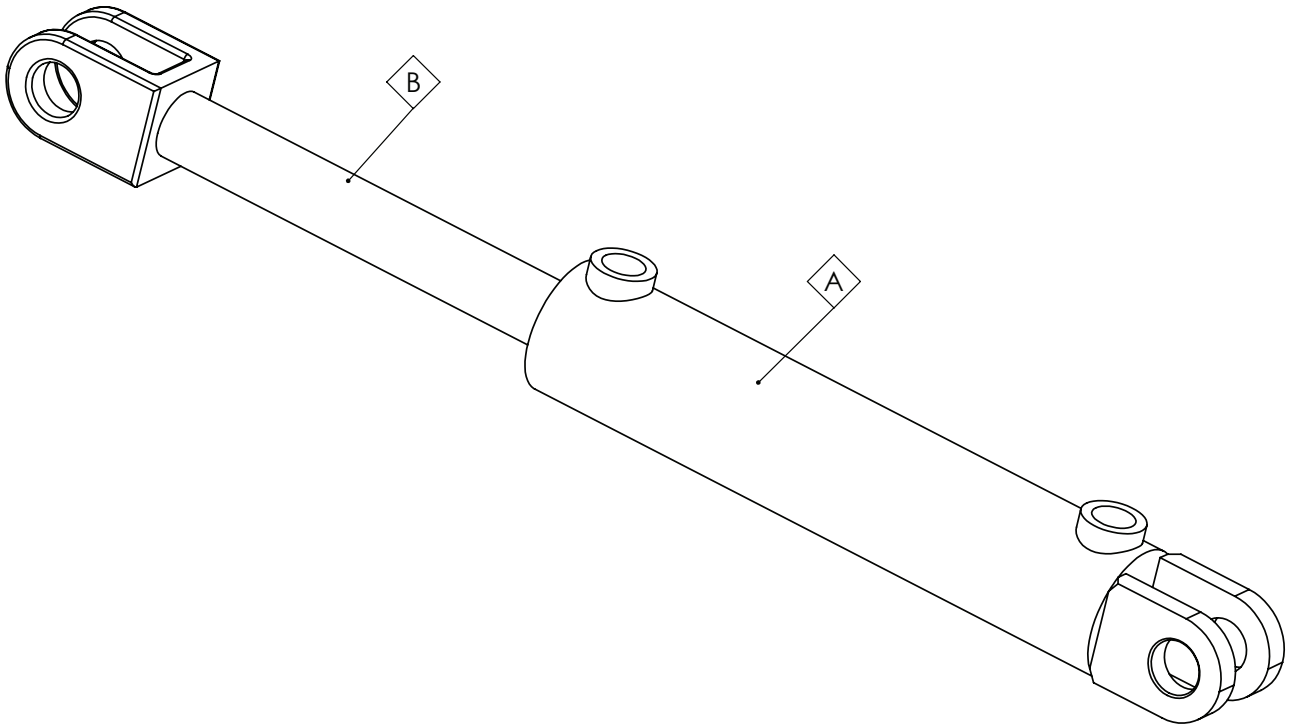

GA5069110 GOLDACRES	HYDRAULIC CYLINDER 2"X1.25"X6" STROKE	REV

Hydraulic Cylinder, Steering, 2WD, 3mt Axle

REPLACEMENT PARTS			
ITEM	PART NUMBER	DESCRIPTION	QTY
A	GA3501758	SEAL KIT, SK-48-24-2680, SUIT, HYDRAULIC CYLINDER, "EUREKA BRAND" ONLY, GA5066586 & GA5066587	-

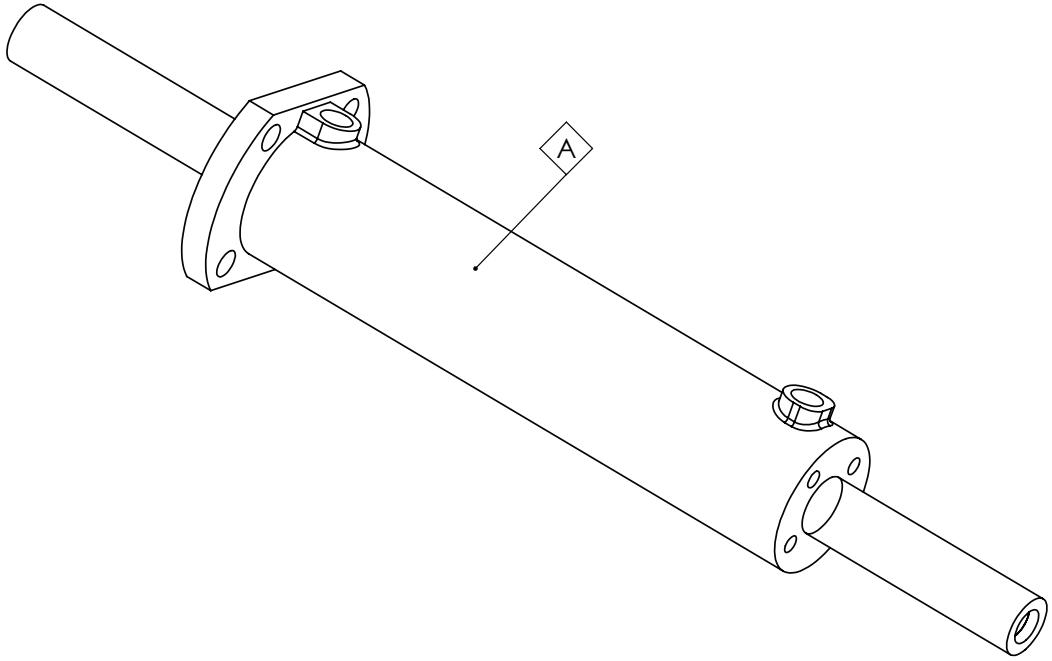

GA5066586 GOLDACRES	HYDRAULIC CYLINDER, BORE 3", ROD 1.5", STROKE 7.5", STEERING	REV 05

Hydraulic Cylinder, Steering, 2-3mt Adjustable Axle

REPLACEMENT PARTS			
ITEM	PART NUMBER	DESCRIPTION	QTY
A	GA3501769	SEAL KITSEAL KIT, SUIT, HYDRAULIC CYLINDER, GA3501631, "MOTUS" BRAND ONLY, SK300150	-
B	GA3501768	SHAFT, SUIT, HYDRAULIC CYLINDER, GA3501631, "MOTUS" BRAND ONLY, 7007650	-

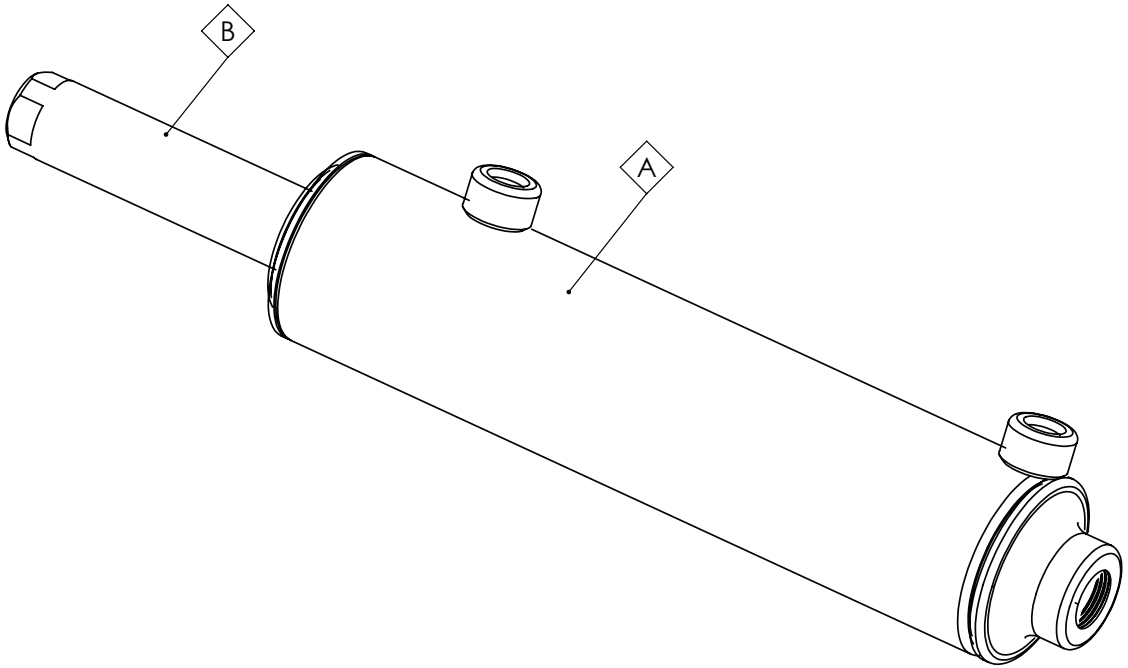

GA3501631 GOLDACRES	RAM HYD PHASING 3.0"X 250mm STROKE FEMALE THREADED ENDS	REV 00

Hydraulic Cylinder, Steering, 3-4mt Adjustable Axle

REPLACEMENT PARTS			
ITEM	PART NUMBER	DESCRIPTION	QTY
A	GA3501781	SEAL KIT, SUIT, HYDRAULIC CYLINDER, GA3500081, "EUREKA BRAND" ONLY	-
B	GA3501782	SHAFT, SUIT, HYDRAULIC CYLINDER, GA3500081, "EUREKA BRAND" ONLY	-

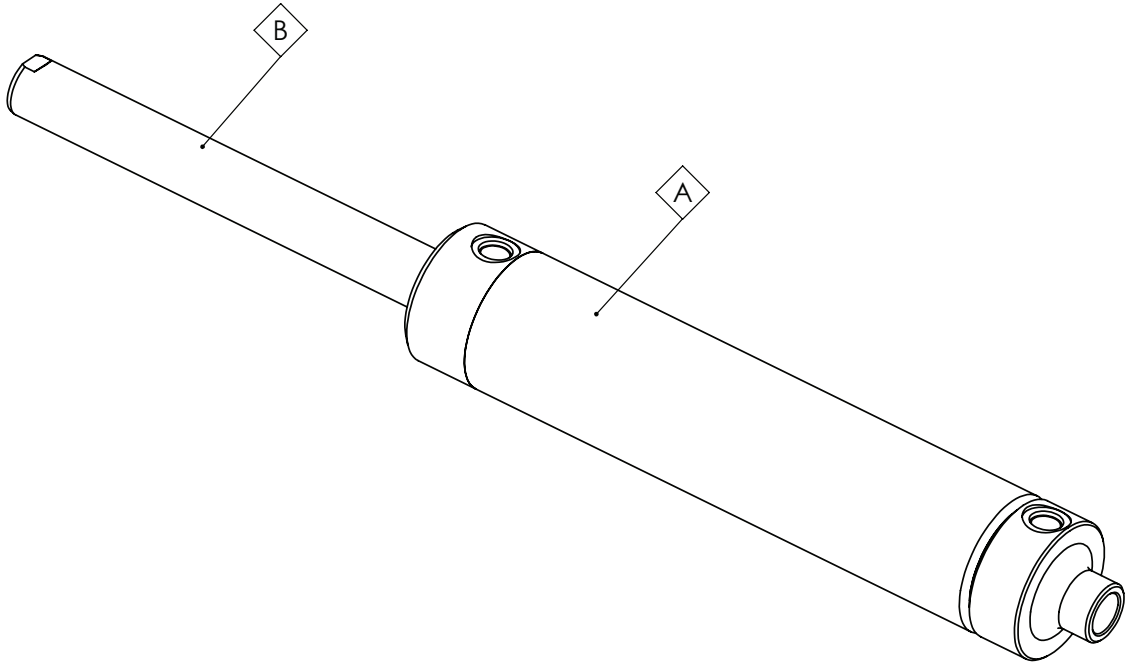

GA3500081 GOLDACRES	HYDRAULIC PHASING CYLINDER, STEERING, 3-4m, G3 G4	REV

Hydraulic Cylinder, Steering, 3mt, 4WD Axle

REPLACEMENT PARTS			
ITEM	PART NUMBER	DESCRIPTION	QTY
A	GA3501770	SEAL KIT, SUIT, HYDRAULIC CYLINDER, GA3500056, "CROSS HYDRAULICS/HYPOWER" BRAND ONLY, KTGA30000002	-

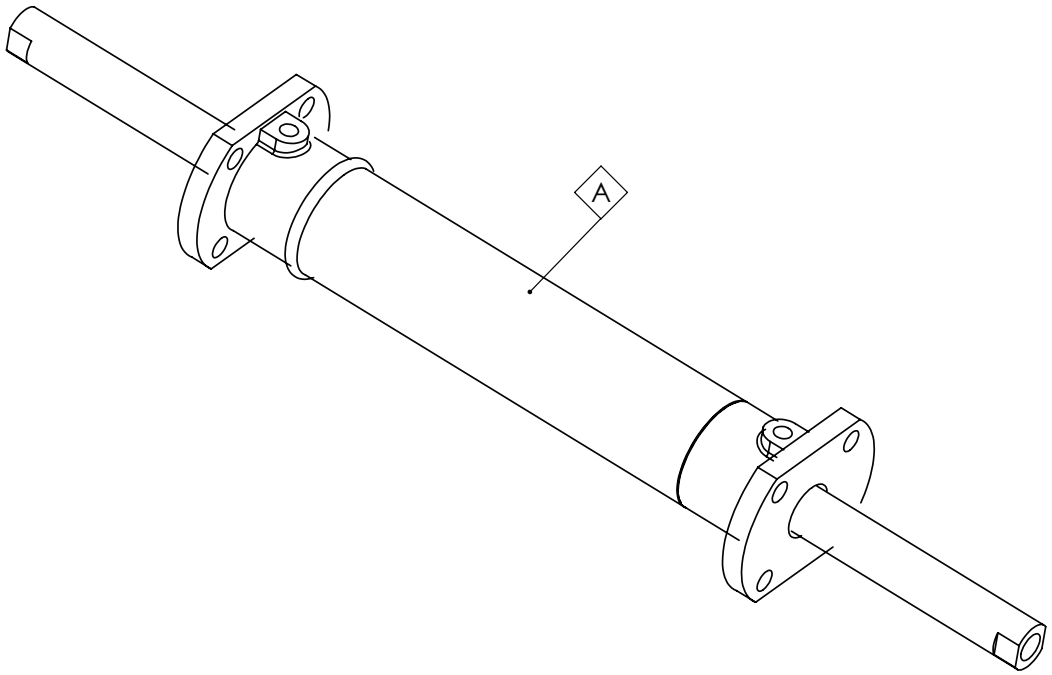

GA3500056 GOLDACRES	HYDRAULIC CYLINDER, BORE 3", ROD 1.5", STROKE 14" / 355.6mm, 9/16" UNO PORTS, FLANGE BOTH ENDS, STEERING	REV 01

Hydraulic Cylinder, Extendable Axle Inner

REPLACEMENT PARTS			
ITEM	PART NUMBER	DESCRIPTION	QTY
A	GA3501764	SEAL KIT, SUIT, HYDRAULIC CYLINDER, GA3500108, "BICELLI GECO" BRAND ONLY	-

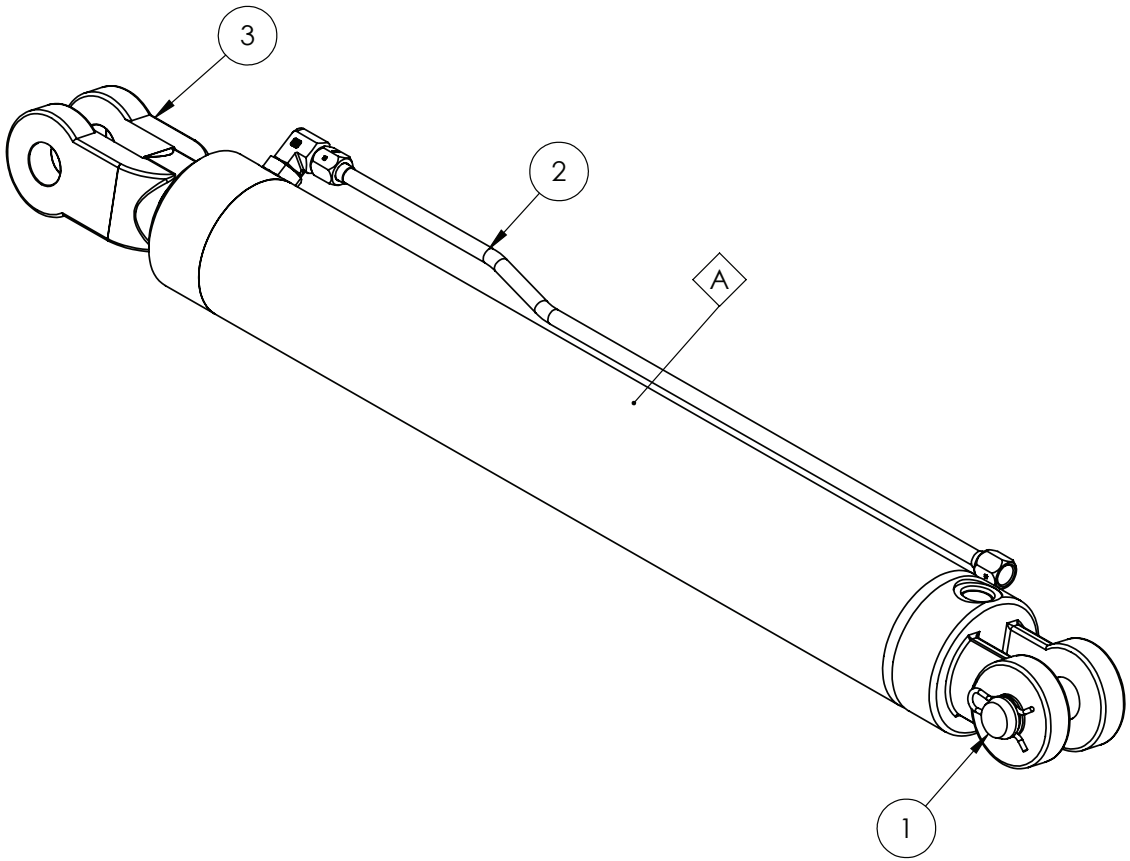

IF DESCRIPTION PREFIX IS ASSEMBLY DRAWING ONLY OR PRODUCTION DRAWING ONLY THE ITEM IS NOT FOR SALE			
ITEM	PART NUMBER	DESCRIPTION	QTY
1	GA3501789	KIT, PIN & R CLIP, SUIT, HYDRAULIC CYLINDER, GA3500108, BICELLI GECO	1
2	GA3501791	OIL TUBE ASSEMBLY, SUIT, HYDRAULIC CYLINDER, GA3500108, "BICELLI GECO" BRAND ONLY	1
3	GA3501790	ROD ASSEMBLY, SUIT, HYDRAULIC CYLINDER, GA3500108, "BICELLI GECO" BRAND ONLY	1
GA3500108 GOLDACRES		HYDRAULIC CYLINDER, 3" BORE, 500mm STROKE, ADJUSTABLE AXLE, G5 G6	REV 00

Hydraulic Cylinder, Bi-Fold

REPLACEMENT PARTS			
ITEM	PART NUMBER	DESCRIPTION	QTY
A	GA3501779	SEAL KIT, SUIT, HYDRAULIC CYLINDER, GA5070845, "MOTUS" BRAND ONLY	-
B	GA3501780	SHAFT, SUIT, HYDRAULIC CYLINDER, GA5070845, "MOTUS" BRAND ONLY	-

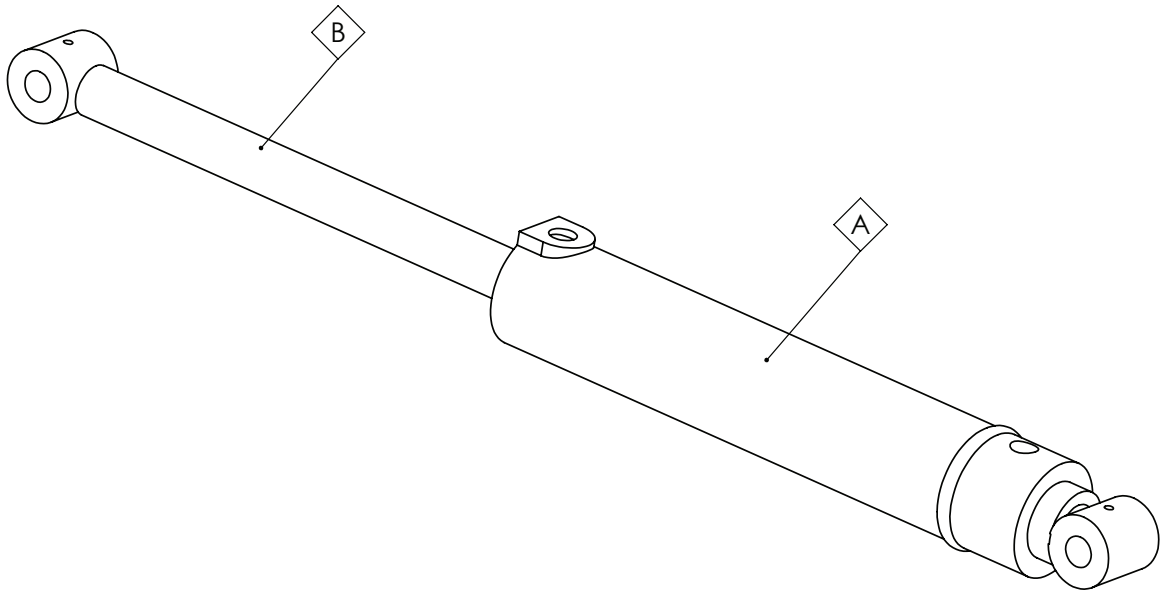

GA5070845 GOLDACRES	HYPOWER RAM SUIT 42M BI FOLD 293mm STROKE, 2 1/2" BORE, 1 1/4" ROD	REV

11 - Boom Centre

Boom Centre Build Options

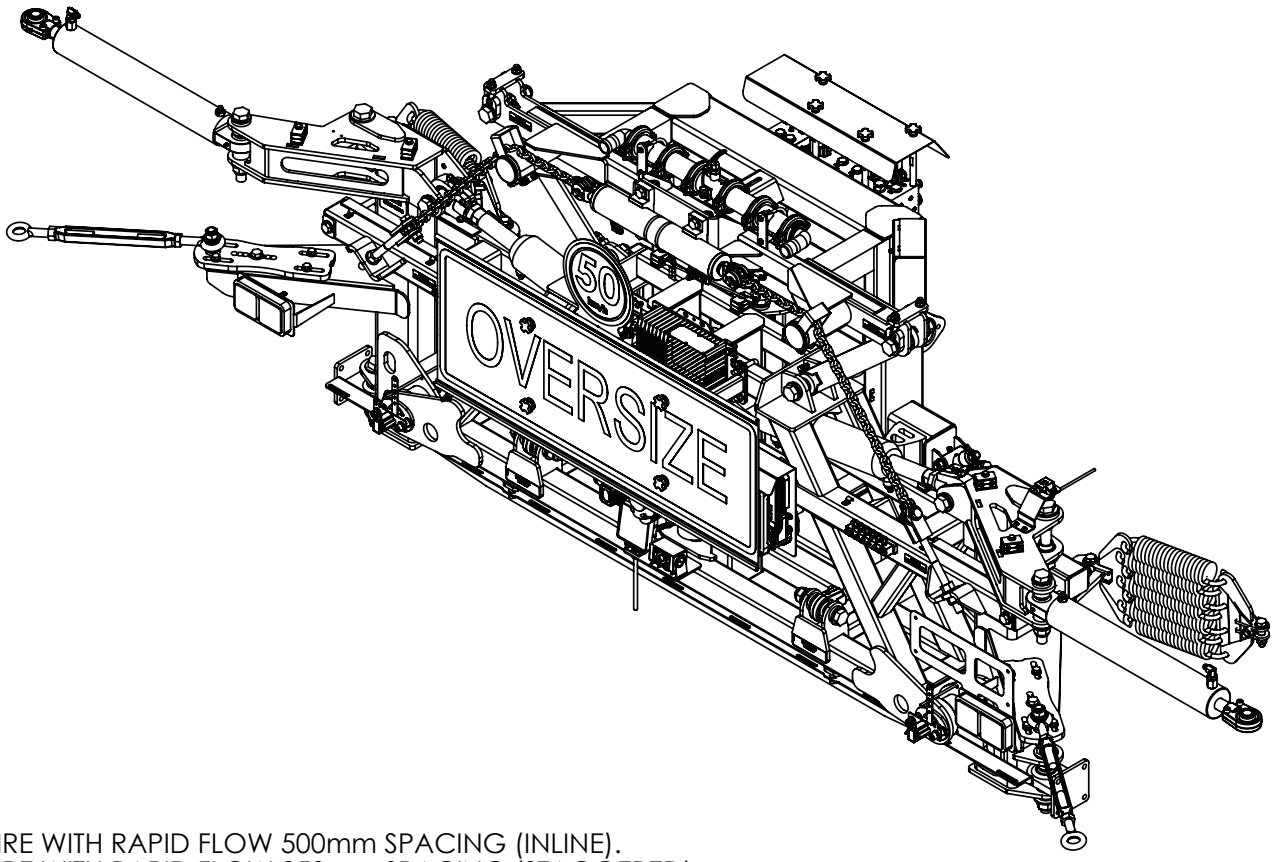

BUILD OPTIONS:
10041 - 3TS RAPID FIRE WITH RAPID FLOW 500mm SPACING (INLINE).
10061 - 3TS RAPID FIRE WITH RAPID FLOW 250mm SPACING (STAGGERED).
10067 - 3TS RAPID FIRE WITH RAPID FLOW 250mm SPACING (STAGGERED) TRIJETS ON TIERS 1.
10069 - 3TS RAPID FIRE WITH RAPID FLOW 250mm SPACING (STAGGERED) TRIJETS ON TIERS 1 AND 2.
10073 - HAWKEYE 2ND GENERATION PWM SYSTEM 250mm SPACING.
10074 - HAWKEYE 2ND GENERATION PWM SYSTEM 500mm SPACING.
20062 - REMOTE GREASE NIPPLE BANK.
20081 - AUTO GREASER - GROENEVELD BEKA EP-1.
20084 - HEAVY GREASE NLGI 2.
20085 - LIGHT GREASE NLGI 0.
26020 - BOOM PLUMBED IN 10 SECTIONS USING CENTRAL SOLENOID VALVE BANK.
30074 - XRT AUTO HEIGHT CONTROL SYSTEM.
30080 - BOOM BIFOLD.
65242 - WEEDETECT BILBERRY USING 3TS
65241 - WEEDETECT BILBERRY USING HAWKEYE

GA6101310 GOLDACRES	CENTRE AND PARALIFT REAR ASSEMBLY, G4, MY24	REV 00.D

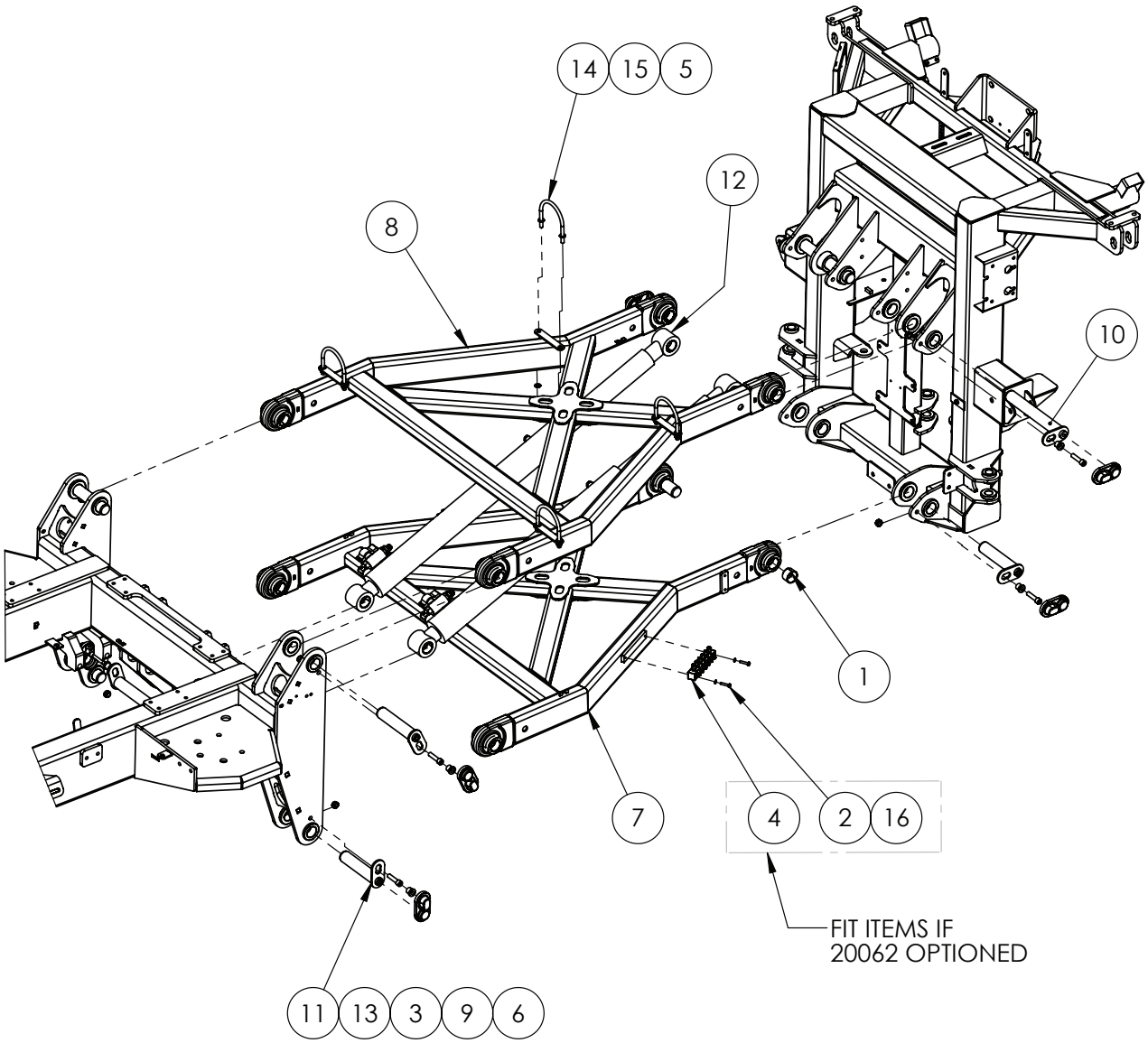

IF DESCRIPTION PREFIX IS ASSEMBLY DRAWING ONLY OR PRODUCTION DRAWING ONLY THE ITEM IS NOT FOR SALE			
ITEM	PART NUMBER	DESCRIPTION	QTY
1	GA1700027	BEARING, GLACIER BUSH, 1 1/2" ID X I" LONG	16
2	GA5004077	BOLT M6 X 30 GR8.8 ZP	4
3	MACH0152	BUSH WITH SHOULDER, 12.3 ID X 25 OD X 21 LONG, SUIT PARALIFT PIN BOLTS	10
4	GA5070000	GREASE FITTING HEADER BLOCK 6 WAY, INC. 6mm LINE ADAPTORS AND STRAIGHT GREASE NIPPLES AND PLUGS	2
5	GA5000141	NUT M10 NYLOC ZP	8
6	GA5012461	NUT M12 NYLOC ZP	10
7	GA4602920	PARALIFT ARM, BOTTOM, SELF PROPELLED, SUIT 1 1/2" PINS, MY20	1
8	GA4661220	PARALIFT ARM, TOP, SELF PROPELLED, SUIT 1 1/2" PINS, 2018	1
9	GA5067885	PIN COVER - PLASTIC	10
10	GA5073465	PIN, 1 1/2", SUIT PARALIFT ARM AND CYLINDER, CHROME PLATED	2
11	GA5073460	PIN, 1 1/2", SUIT PARALIFT ARM, CHROME PLATED	8
12	GA4950580	PRODUCTION DRAWING ONLY, LIFT HYDRAULIC CYLINDER ASSEMBLY, G6 MY20	2
13	GA5051470	SHCS M12 X 50 GR12.9 ZP	10
14	GA5070905	U BOLT SUIT PARALIFT ARM HYDRAULIC HOSE	4
15	GA5000117	WASHER 10mm FLAT SS HD	8
16	GA5004437	WASHER 6mm FLAT SS	4
GA7800201 GOLDACRES	ASSEMBLY DRAWING ONLY, PARALIFT ARMS, LIFT CYLINDERS, CHASSIS MOUNT, UBOLTS, G4 S2, MY24		REV 00.C

Hydraulic Cylinder Assembly, Lift

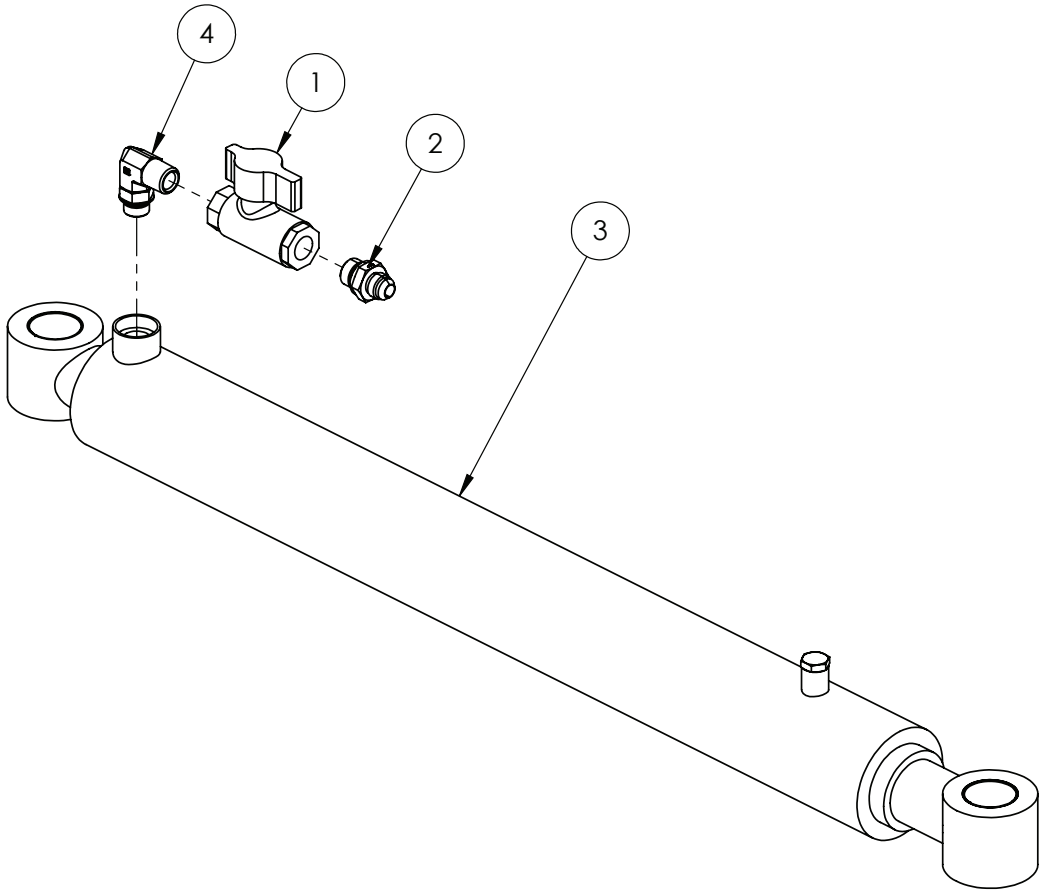

IF DESCRIPTION PREFIX IS ASSEMBLY DRAWING ONLY OR PRODUCTION DRAWING ONLY THE ITEM IS NOT FOR SALE			
ITEM	PART NUMBER	DESCRIPTION	QTY
1	GA5000835	BALL VALVE HYDRAULIC 1/2" FF	1
2	GA3500303	HYDRAULIC ADAPTOR NIPPLE, 1/2" BSPP TO 3/4" JIC	1
3	GA3500593	HYDRAULIC CYLINDER, DISPLACEMENT, 3" BORE, 2.5" ROD, 26" STROKE SUIT 1.5" PINS	1
4	GA3500349	HYDRAULIC ADAPTOR, ELBOW, 90 DEGREE, 1/2" BSPT MALE X 3/4" UN MALE O-RING	1
GA4950580 GOLDACRES		PRODUCTION DRAWING ONLY, LIFT HYDRAULIC CYLINDER, TRI-TECH RIVX SERIES	REV 00.B

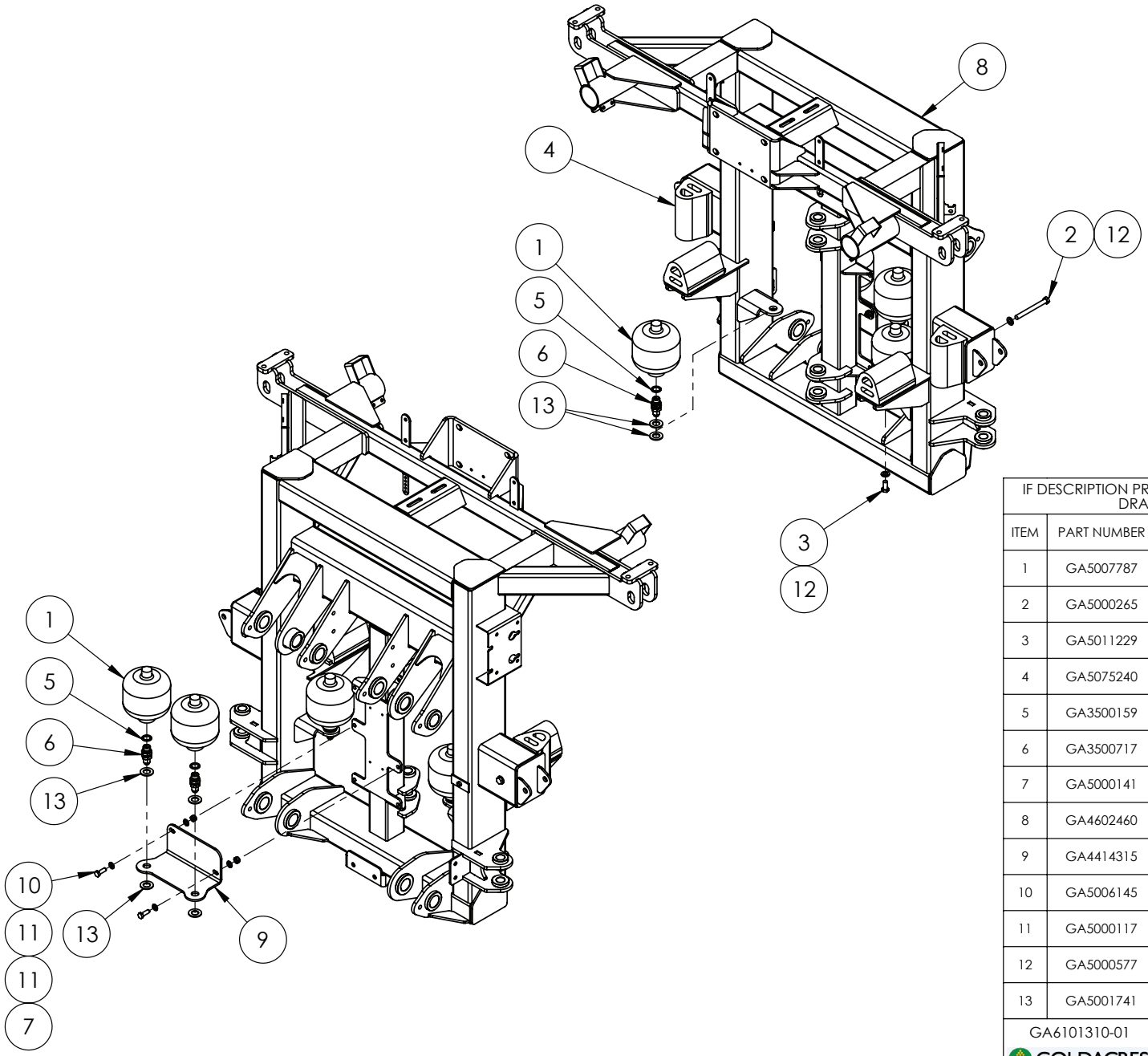

IF DESCRIPTION PREFIX IS ASSEMBLY DRAWING ONLY OR PRODUCTION DRAWING ONLY THE ITEM IS NOT FOR SALE			
ITEM	PART NUMBER	DESCRIPTION	QTY
1	GA5007787	ACCUMULATOR 1.0L PRECHARGE 70 BAR	4
2	GA5000265	BOLT M12 X 120 GR8.8 ZP	2
3	GA5011229	BOLT M12 X 25 GR8.8 ZP	2
4	GA5075240	BUMP STOP RUBBER WITH THREADED INSERT	4
5	GA3500159	HYDRAULIC SEAL, BONDED, 1/2", RL21D-08	4
6	GA3500717	HYDRAULIC ADAPTOR, BULKHEAD NIPPLE, 1/2" BSPP MALE X 3/4" JIC MALE, S130P-0812	4
7	GA5000141	NUT M10 NYLOC ZP	2
8	GA4602460	PARALIFT REAR, TRITECH, MY20	1
9	GA4414315	PLATE, MOUNT, ACCUMULATOR & REVERSE BEEPER, G4, S2	1
10	GA5006145	SET SCREW M10 X 30 SS A2-70	2
11	GA5000117	WASHER 10mm FLAT SS HD	4
12	GA5000577	WASHER 12mm FLAT SS HD	4
13	GA5001741	WASHER 20mm FLAT SS HD	8
GA6101310-01 GOLDACRES		CENTRE AND PARALIFT REAR ASSEMBLY, G4, MY24	REV 00.B

Long Delta Links, Mounting

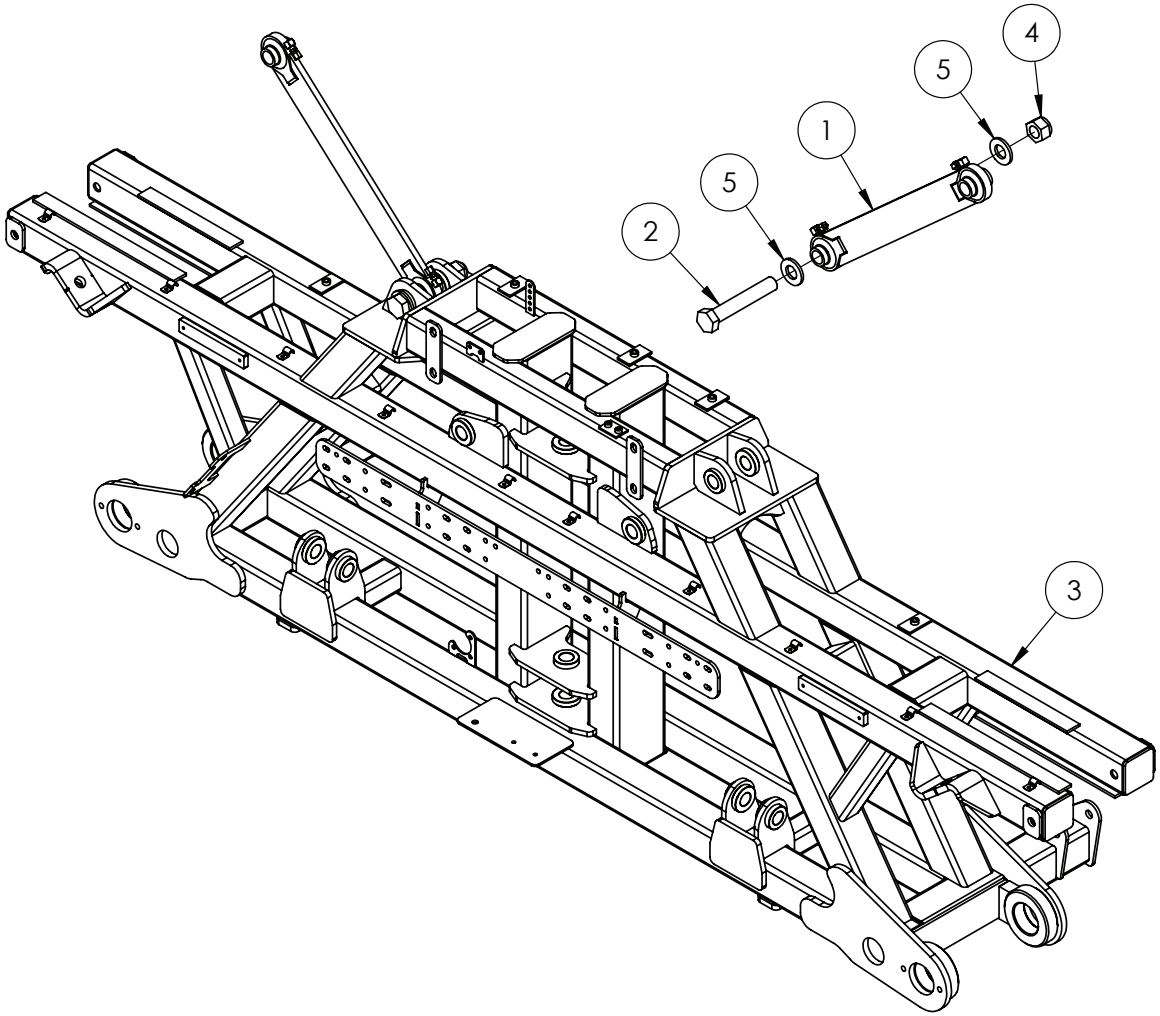

IF DESCRIPTION PREFIX IS ASSEMBLY DRAWING ONLY OR PRODUCTION DRAWING ONLY THE ITEM IS NOT FOR SALE			
ITEM	PART NUMBER	DESCRIPTION	QTY
1	GA6101820	ASSEMBLY DRAWING ONLY, DELTA LINK, LONG, G4, SERIES 2, MY24	2
2	GA4683145	BOLT 1 UNC X 6 CUT DOWN FROM 7	2
3	GA4658122	CENTRE SECTION, TRITECH, 24m - 42m, 2017	1
4	GA5012439	NUT 1" NYLOC UNC ZP	2
5	GA5017659	WASHER 1 FLAT ZP HD (5mm THICK)	4
GA6101310-02 GOLDACRES		CENTRE AND PARALIFT REAR ASSEMBLY, G4, MY24	REV 00

Delta Link, Long

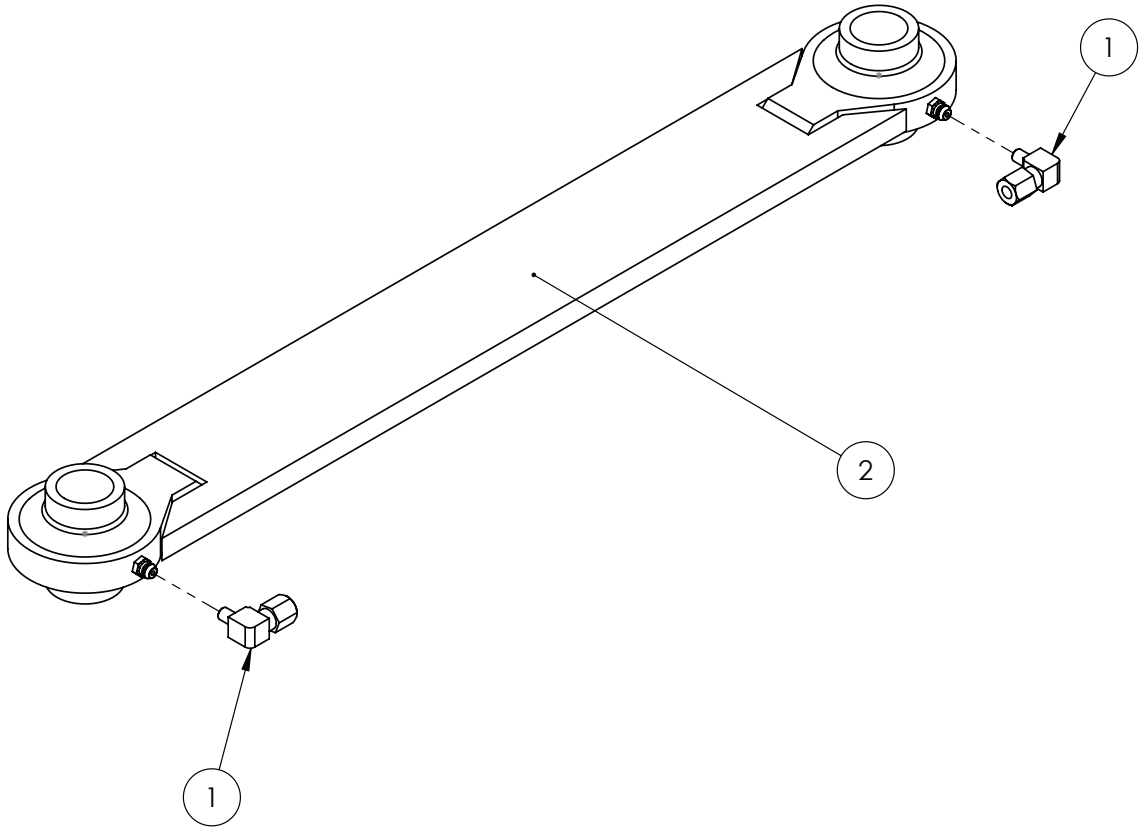

NOTE:

REMOVE GREASE NIPPLES SUPPLIED WITH DELTA LINK AND REPLACE WITH ITEM 1

IF DESCRIPTION PREFIX IS ASSEMBLY DRAWING ONLY OR PRODUCTION DRAWING ONLY THE ITEM IS NOT FOR SALE			
ITEM	PART NUMBER	DESCRIPTION	QTY
1	GA5069995	GREASE FITTING LINE CONNECTOR ELBOW 6mm	2
2	GA4656240	LONG DELTA LINK	1
GA6101820 GOLDACRES		ASSEMBLY DRAWING ONLY, DELTA LINK, LONG, G4, SERIES 2, MY24	REV 01

Short Delta Links, Mounting

NOTE:
THE FOLLOWING SERIAL NUMBERS HAVE
ADJUSTABLE TOP AND BOTTOM DELTA LINKS

ITEM 1

S/N 203766
S/N 203840
S/N 203868
S/N 203890
S/N 203891
S/N 203932
S/N 203952

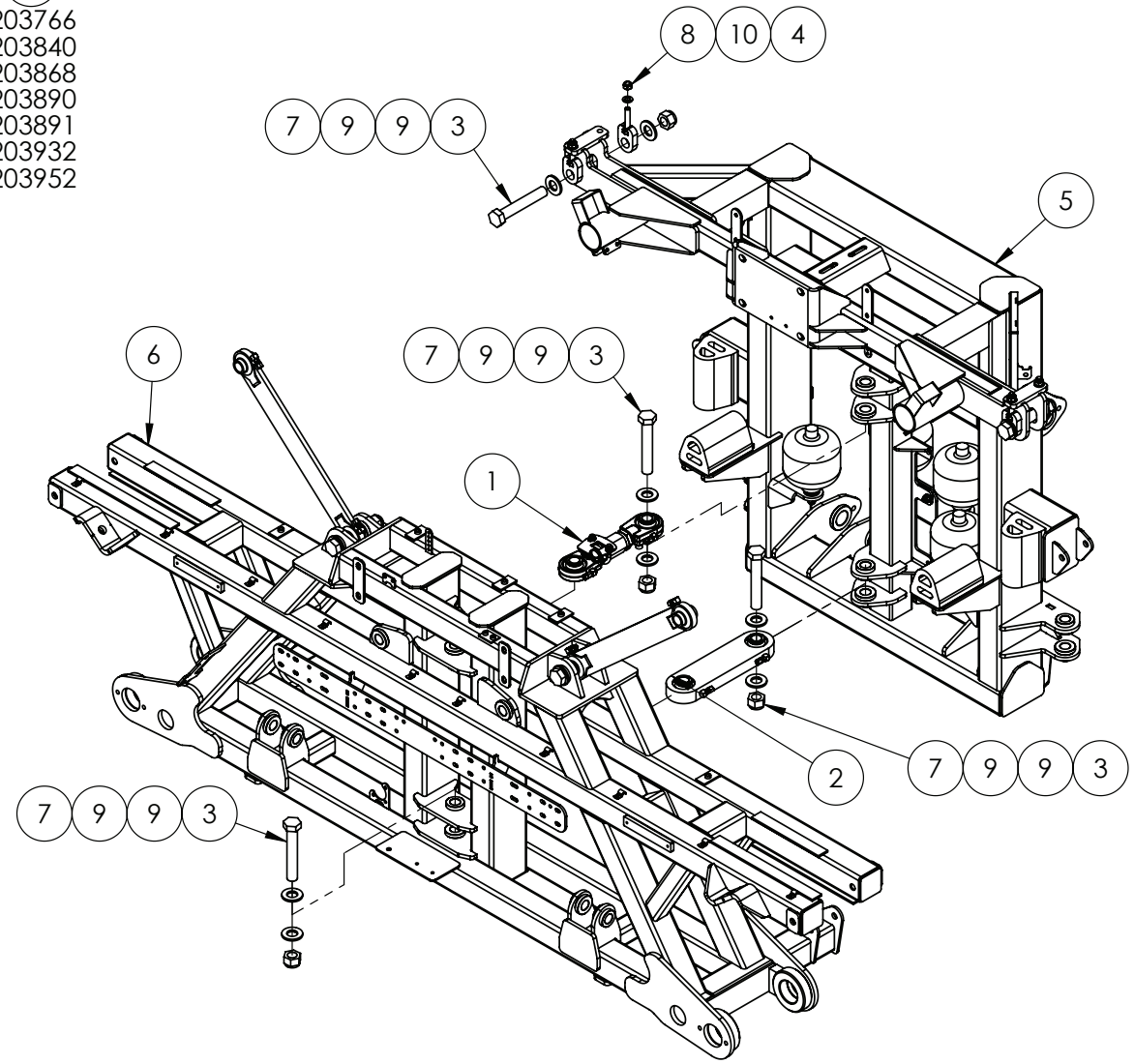

IF DESCRIPTION PREFIX IS ASSEMBLY DRAWING ONLY OR PRODUCTION DRAWING ONLY THE ITEM IS NOT FOR SALE			
ITEM	PART NUMBER	DESCRIPTION	QTY
1	GA6101810	ASSEMBLY DRAWING ONLY, DELTA LINK, ADJUSTABLE, G4, SERIES 2, MY24	1
2	GA6101800	ASSEMBLY DRAWING ONLY, DELTA LINK, SHORT, G4, SERIES 2, MY24	1
3	GA4683145	BOLT 1 UNC X 6 CUT DOWN FROM 7	6
4	GA4656260	BOOM DELTA HANGER ADJUSTER BOLT	4
5	GA6101310-01	CENTRE AND PARALIFT REAR ASSEMBLY, CONFIGURABLE, G6, MY19	1
6	GA6101310-02	CENTRE AND PARALIFT REAR ASSEMBLY, CONFIGURABLE, G6, MY19	1
7	GA5012439	NUT 1" NYLOC UNC ZP	6
8	GA5012461	NUT M12 NYLOC ZP	4
9	GA5017659	WASHER 1 FLAT ZP HD (5mm THICK)	12
10	GA5000577	WASHER 12mm FLAT SS HD	4
GA6101310-03 GOLDACRES		CENTRE AND PARALIFT REAR ASSEMBLY, G4, MY24	REV 00.B

Delta Link, Short

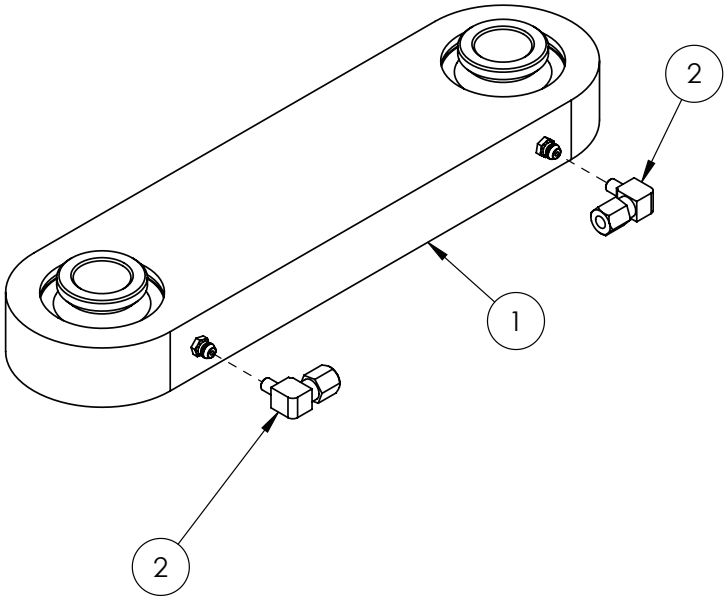

NOTE:

REMOVE GREASE NIPPLES SUPPLIED WITH DELTA LINK AND REPLACE WITH ITEM 2

IF DESCRIPTION PREFIX IS ASSEMBLY DRAWING ONLY OR PRODUCTION DRAWING ONLY THE ITEM IS NOT FOR SALE			
ITEM	PART NUMBER	DESCRIPTION	QTY
1	GA5067855	DELTA LINK, SHORT, HEAVY DUTY	1
2	GA5069995	GREASE FITTING LINE CONNECTOR ELBOW 6mm	2
GA6101800 GOLDACRES		ASSEMBLY DRAWING ONLY, DELTA LINK, SHORT, G4, SERIES 2, MY24	REV 01

Delta Link, Short, Adjustable

REPLACEMENT PARTS			
ITEM	PART NUMBER	DESCRIPTION	QTY
A	GA5067610	CIRCLIP, SUIT BEARING SCREW ON ROSE END, RTW 55	-
B	GA5021925	SMALL BEARING BUSH, SUIT SCREW ON ROSE END, HYPOWER, R-10424	-
C	GA5069995	GREASE FITTING, ELBOW 90 DEGREE, LINE CONNECTOR 6mm	-

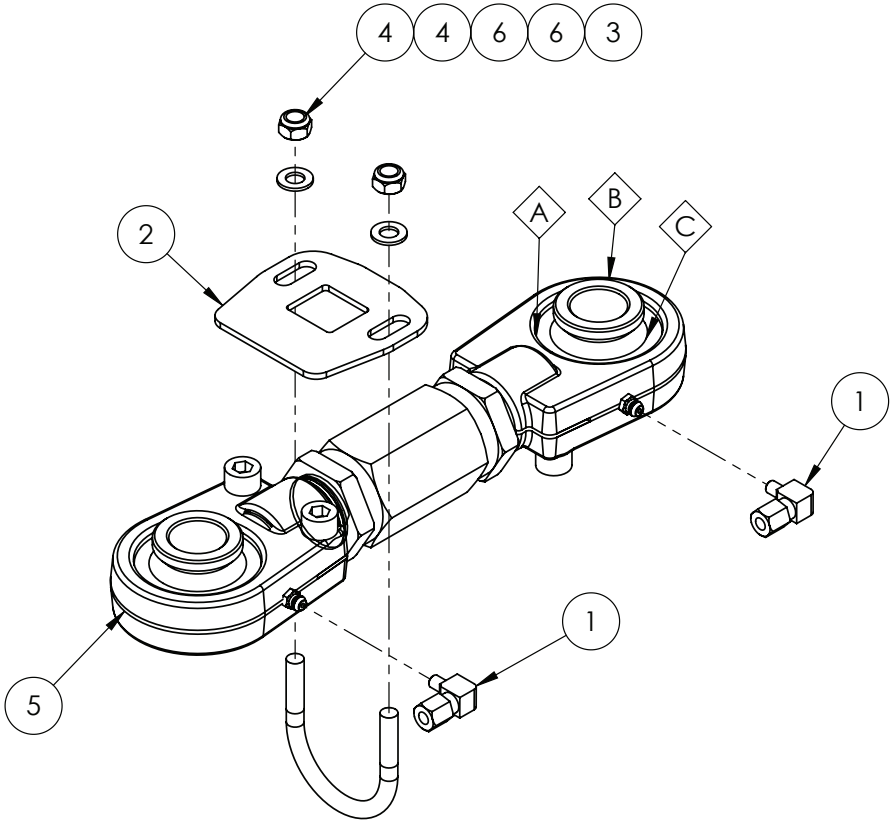

NOTE:

REMOVE GREASE NIPPLES SUPPLIED WITH DELTA LINK AND REPLACE WITH ITEM 1

IF DESCRIPTION PREFIX IS ASSEMBLY DRAWING ONLY OR PRODUCTION DRAWING ONLY THE ITEM IS NOT FOR SALE			
ITEM	PART NUMBER	DESCRIPTION	QTY
1	GA5069995	GREASE FITTING LINE CONNECTOR ELBOW 6mm	2
2	GA4524140	LOCKING PLATE SUIT ADJUSTABLE DELTA LINK	1
3	GA5018245	M8 X 50 X 60 RT U BOLT	1
4	GA5004917	NUT M8 NYLOC ZP	2
5	DELTA-LINKSA	SHORT ADJUSTABLE DELTA LINK	1
6	GA5003643	WASHER 8mm FLAT SS HD	2
GA6101810 GOLDACRES		ASSEMBLY DRAWING ONLY, DELTA LINK, ADJUSTABLE, G4, SERIES 2, MY24	REV 01

Hydraulic Yaw Mounting

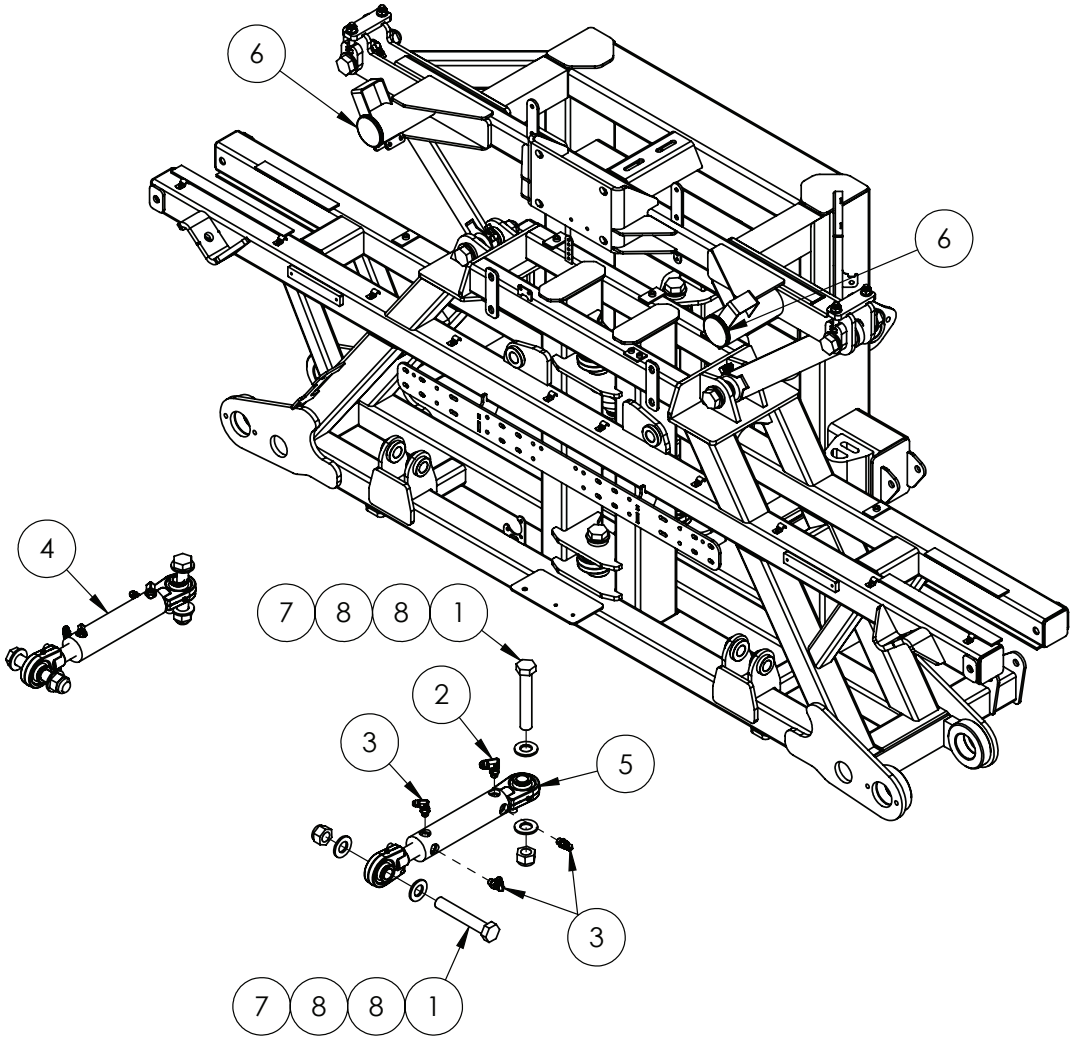

IF DESCRIPTION PREFIX IS ASSEMBLY DRAWING ONLY OR PRODUCTION DRAWING ONLY THE ITEM IS NOT FOR SALE			
ITEM	PART NUMBER	DESCRIPTION	QTY
1	GA4683145	BOLT 1 UNC X 6 CUT DOWN FROM 7	4
2	GA3500802	HYDRAULIC ADAPTOR, ELBOW, 90 DEGREE, 3/4" JIC MALE X 9/16" UN MALE O-RING, S91-1209	2
3	GA3500716	HYDRAULIC ADAPTOR, ELBOW, 90 DEGREE, 9/16" JIC MALE X 9/16" UN MALE O-RING, S91-0909	6
4	GA5060817	HYDRAULIC YAW CYLINDER WITH BALL ENDS	1
5	GA5060817	HYDRAULIC YAW CYLINDER WITH BALL ENDS	1
6	GA5050355	INSERT TO SUIT 65NB TUBE	2
7	GA5012439	NUT 1" NYLOC UNC ZP	4
8	GA5017681	WASHER 1 X 2 7G FLAT THIN SS	8
GA6101310-04 GOLDACRES		CENTRE AND PARALIFT REAR ASSEMBLY, G4, MY24	REV 00

Roll Shockers

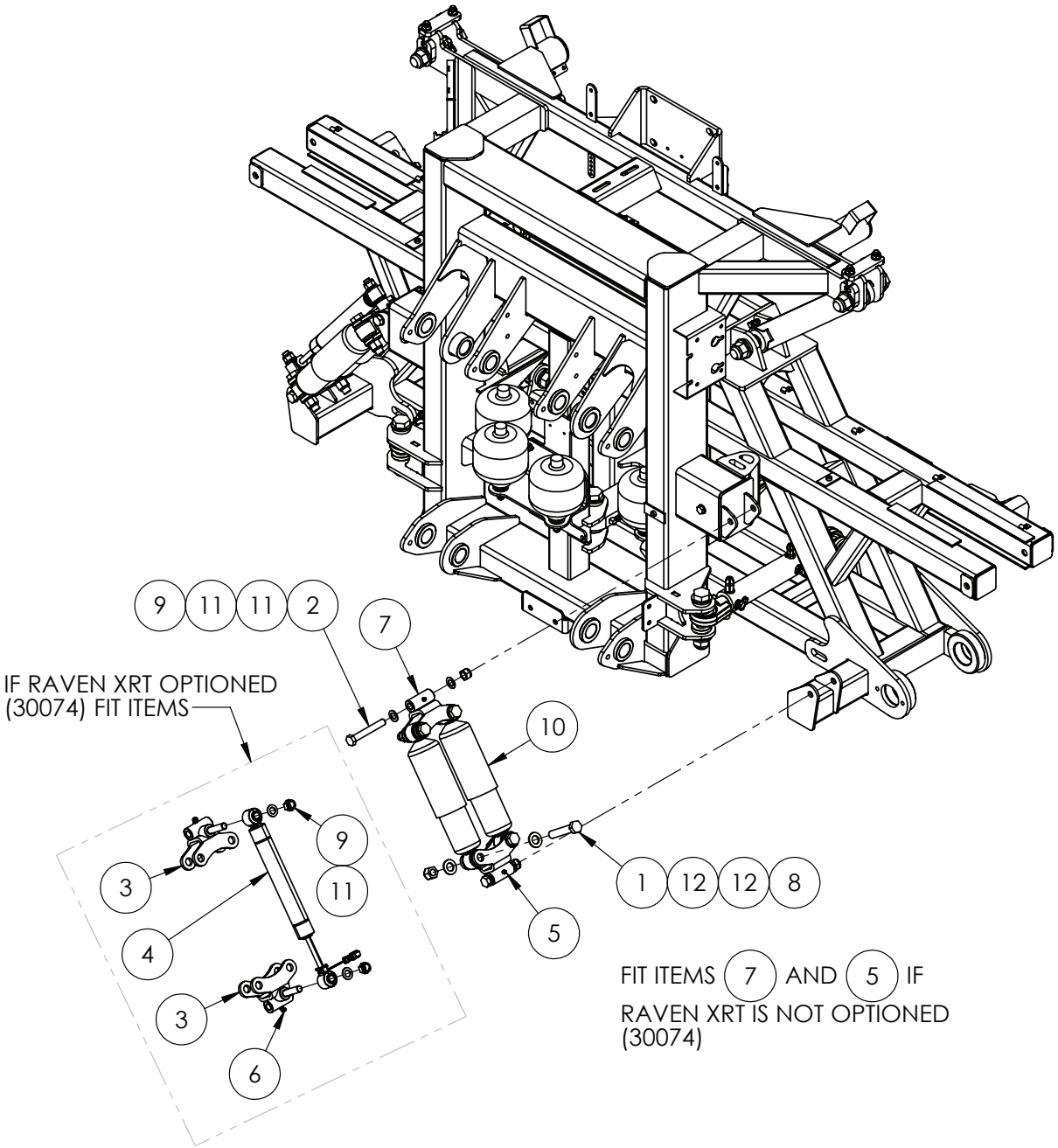

IF DESCRIPTION PREFIX IS ASSEMBLY DRAWING ONLY OR PRODUCTION DRAWING ONLY THE ITEM IS NOT FOR SALE			
ITEM	PART NUMBER	DESCRIPTION	QTY
1	GA5049490	BOLT 3/4" UNC X 4" HT ZP	8
2	GA5000855	BOLT M16 X 110 GR8.8 ZP	4
3	GA4602475	CENTRE ROLL SHOCKER MOUNT WITH RAVEN XRT VARIABLE DAMPER MOUNT	4
4	GA3000379	DAMPER, VARIABLE, RAVEN	2
5	GA5012203	GREASE NIPPLE, SHORT, 1/4 UNF, MACH0207	4
6	GA5009637	GREASE NIPPLE, ELBOW, 90 DEGREE, 1/4 UNF MALE, MACH0207	4
7	GA4659360	MOUNTING BRACKET, DUAL ROLL SHOCK ABSORBER, CENTRE	4
8	GA5048430	NUT 3/4 UNC NYLOC ZP	8
9	GA5001029	NUT M16 NYLOC ZP	8
10	GA5015139	SHOCK ABSORBER, DOUBLE EYE, 19mm EYE, 82mm OD, BLACK	4
11	GA5001055	WASHER 16mm FLAT SS	12
12	GA5001741	WASHER 20mm FLAT SS HD	16
GA6101310-05 GOLDACRES		CENTRE AND PARALIFT REAR ASSEMBLY, G4, MY24	REV 00

Boom Centre, Tilt Arm & Tilt Cylinder Mounting

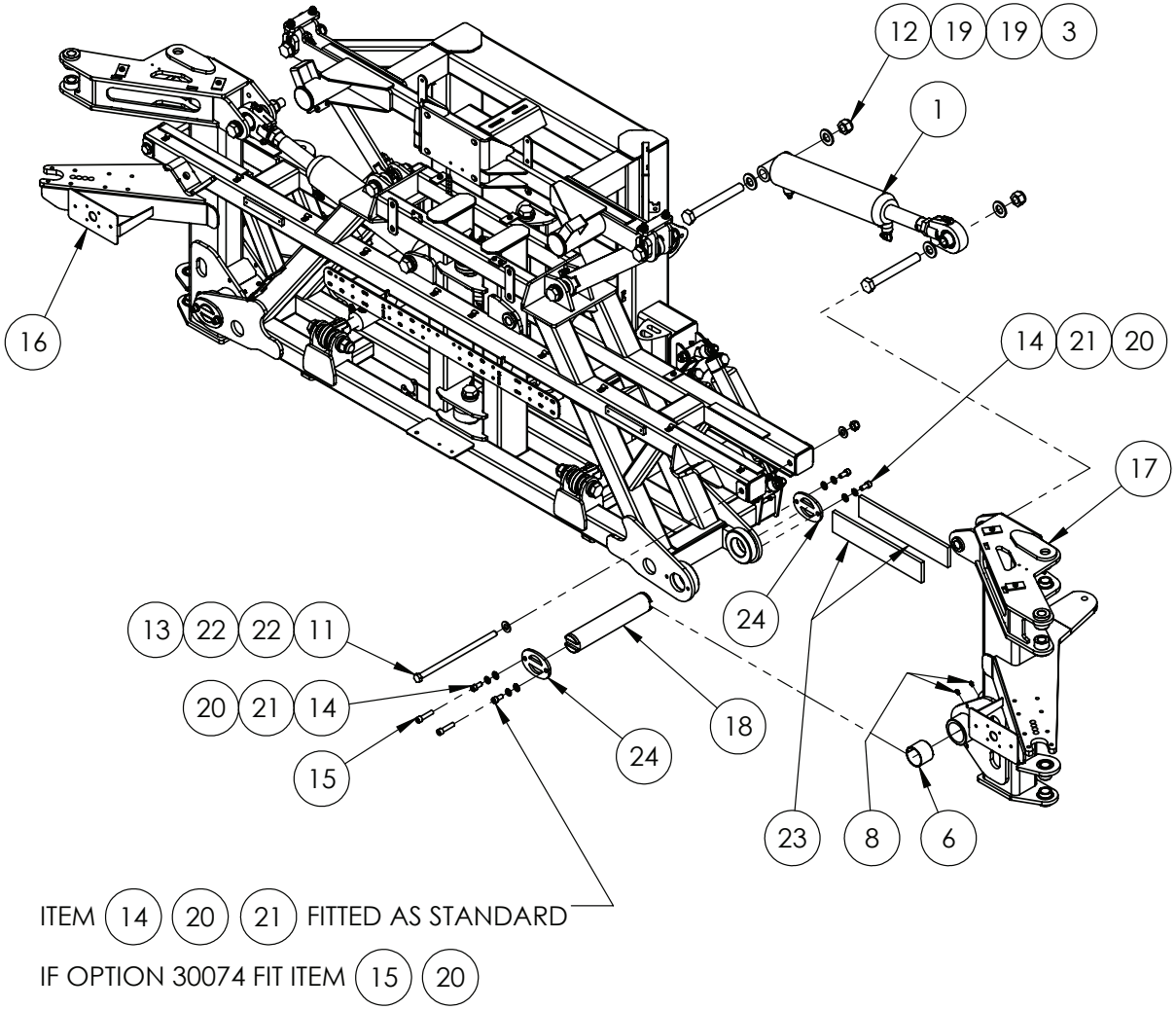

ITEM (14) (20) (21) FITTED AS STANDARD

IF OPTION 30074 FIT ITEM (15) (20)

IF DESCRIPTION PREFIX IS ASSEMBLY DRAWING ONLY OR PRODUCTION DRAWING ONLY THE ITEM IS NOT FOR SALE			
ITEM	PART NUMBER	DESCRIPTION	QTY
1	GA6101750	ASSEMBLY DRAWING ONLY. TILT CYLINDER FITTING OPTIONS, LF PRAIRIE SPECIAL, S2 MY23	2
2	GA5006151	BOLT 1 UNF 12 TPI X 8 GR8 ZP	2
3	GA0500025	BOLT 1 UNF 12 TPI X 8 1/2 GR8 ZP	2
4	GA5071695	COUPLING, MALE STUD, OLIVE TYPE, AUTO GREASER	2
5	GA5071690	ELBOW, M6 X M8 CONNECTOR STUD, AUTO GREASE	2
6	GA5075060	GLACIER BUSH 60mm ID X 50mm LONG	4
7	GA5079030	GREASE FITTING, MALE STUD COUPLING, M6 X 3/16" BRASS/ZINC, F103440	2
8	GA5050450	GREASE NIPPLE, 6mm	4
9	GA5069995	GREASE FITTING LINE CONNECTOR ELBOW 6mm	2
10	GA5069985	GREASE FITTING LINE CONNECTOR STRAIGHT 6mm	2
11	GA5075125	M16 X 325 GR4.4 ZP 60.mm THREAD	2
12	GA5012439	NUT 1" NYLOC UNC ZP	4
13	GA5012463	NUT M16 NYLOC SS	2
14	GA5000297	SHCS M12 X 25 GR12.9 ZP	8
15	GA5051470	SHCS M12 X 50 GR12.9 ZP	4
16	GA4660185	TILT ARM TRITECH 42M LH DUAL FOLD CYLINDER	1
17	GA4660190	TILT ARM TRITECH 42M RH DUAL FOLD CYLINDER	1
18	GA4572365	TILT PIN SUIT WIDE CENTRE	2
19	GA5017659	WASHER 1 FLAT ZP HD (5mm THICK)	8
20	GA5000577	WASHER 12mm FLAT SS HD	8
21	GA5000575	WASHER 12mm SPRING SS	8
22	GA5001043	WASHER 16mm FLAT SS HD	4
23	GA5075090	WEAR PAD SUIT 2011 CENTER WEAR STRIP POLYSTONE	4
24	GA4502280	PIN RETAINER	4
GA6101310-06 GOLDACRES		CENTRE AND PARALIFT REAR ASSEMBLY, G4, MY24	REV 01

Hydraulic Cylinder, Tilt, Greasing Assembly Options

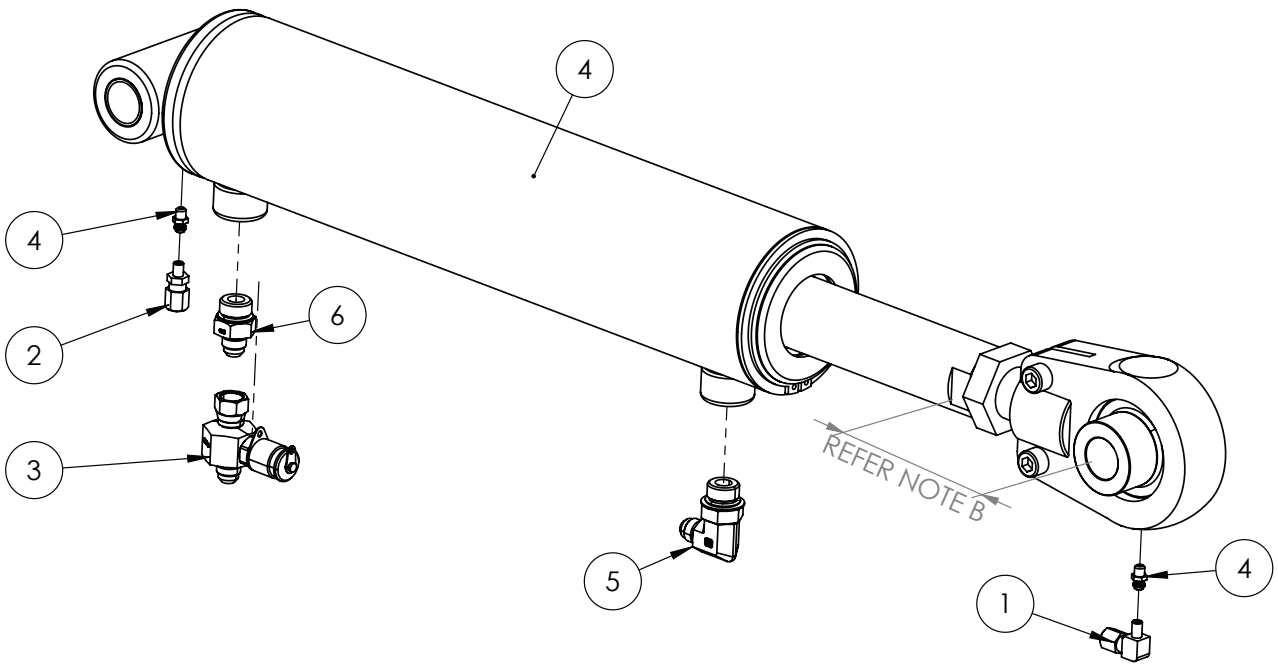

NOTE B:

SET ROSE END DISTANCE AT 105mm FOR STANDARD TRITEC BOOM.

IF OPTION 30074 - XRT AUTO HIEGHT CONTROL, SET ROSE END DISTANCE AT 160mm.

IF LF PRAIRIE SPECIAL, S2 MY23

1. DEFAULT - GREASE NIPPLES ITEM (4)

2. IF 20060 IS OPTIONED - REMOTE GREASE NIPPLE BANK, REMOVE GREASE NIPPLES ITEM (4) FROM CYLINDER BEFORE USING ITEM (1) AND (2).

IF G4, S2 - MY24

REMOVE SUPPLIED GREASE NIPPLES BEFORE FITTING ITEMS (1), (2)

IF DESCRIPTION PREFIX IS ASSEMBLY DRAWING ONLY OR PRODUCTION DRAWING ONLY THE ITEM IS NOT FOR SALE			
ITEM	PART NUMBER	DESCRIPTION	QTY
1	GA5069995	GREASE FITTING LINE CONNECTOR ELBOW 6mm	1
2	GA5069985	GREASE FITTING LINE CONNECTOR STRAIGHT 6mm	1
3	GA3501090	HYDRAULIC ADAPTOR, 9/16" JIC FEMALE SWIVEL X 9/16" JIC MALE X TEST POINT, S159-090916	1
4	GA5065051	HYDRAULIC CYLINDER, BORE 3.5", ROD 1.75", STROKE 5"	1
5	GA3500700	HYDRAULIC ADAPTOR, ELBOW, 90 DEGREE, 9/16" JIC MALE X 3/4" UN MALE O-RING, S91-0912	1
6	GA3500147	HYDRAULIC ADAPTOR, NIPPLE, 9/16" JIC MALE X 3/4" UN MALE O-RING, S90-0912	1
GA6101750 GOLDACRES		ASSEMBLY DRAWING ONLY. TILT CYLINDER FITTING OPTIONS, LF PRAIRIE SPECIAL, S2 MY23	REV 04

Boom Centre, Fold Cylinder & Fold Ram Mount

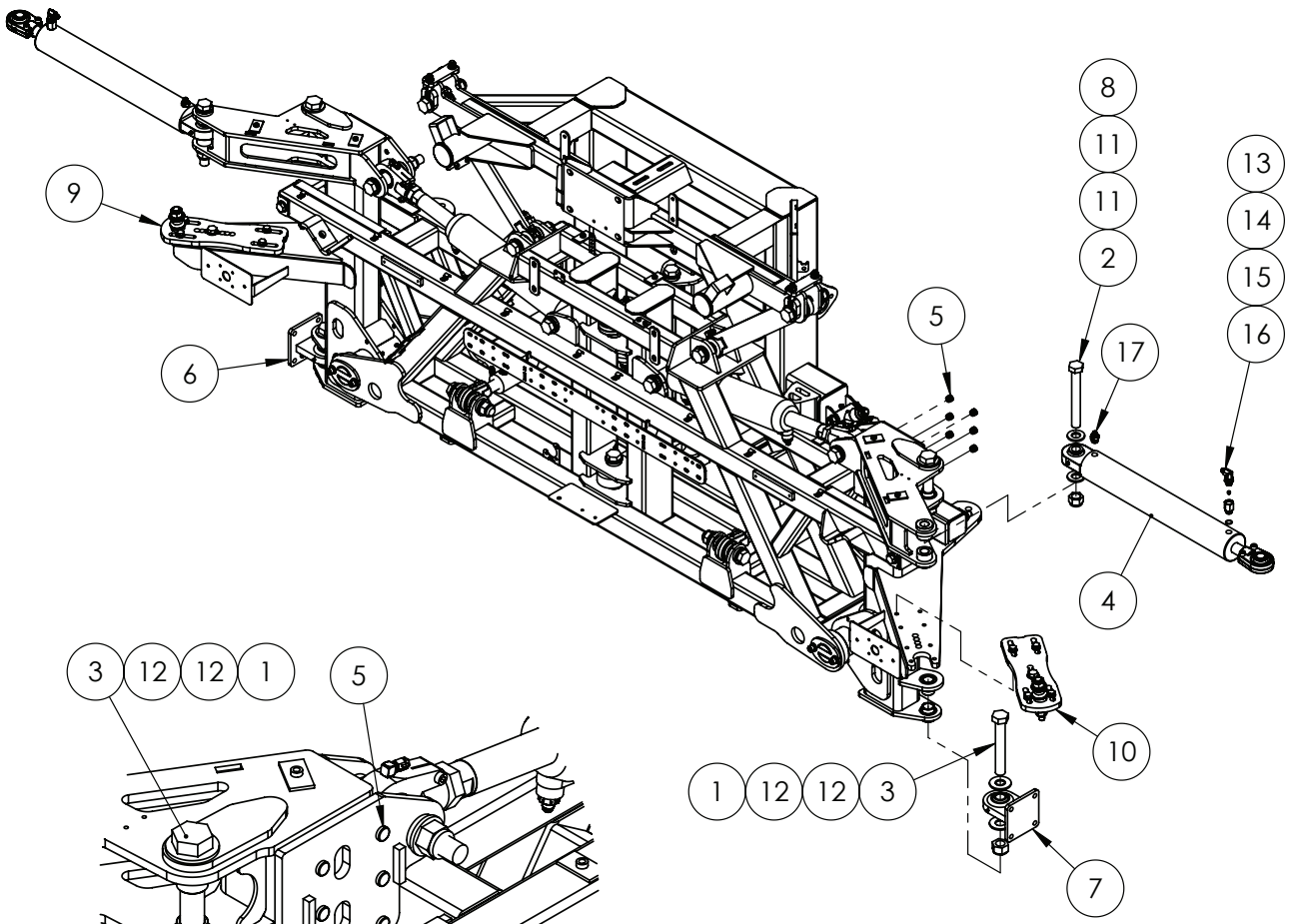

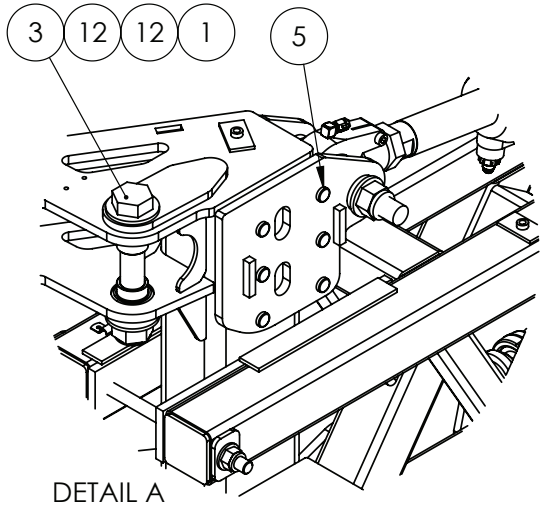

IF DESCRIPTION PREFIX IS ASSEMBLY DRAWING ONLY OR PRODUCTION DRAWING ONLY THE ITEM IS NOT FOR SALE			
ITEM	PART NUMBER	DESCRIPTION	QTY
1	GA0500054	1 1/8" NYLOC NUT UNC ZP	4
2	GA5006151	BOLT 1 UNF 12 TPI X 8 GR8 ZP	2
3	GA0500053	BOLT, 1 1/8" X 7 1/2" UNC, ZP, GR8	4
4	GA5018538	HYDRAULIC CYLINDER, BORE 3", ROD 1.25", STROKE 18"	2
5	GA5052910	INSERT T/s 16 mm HOLE	12
6	GA4656201	LOWER ROSE END MOUNTING ASSEMBLY LH	1
7	GA4656200	LOWER ROSE END MOUNTING ASSEMBLY RH	1
8	GA5012446	NUT, 1", UNF, 12 TPI, NYLOC ZP	2
9	GA4922226	REAR CABLE MOUNT 24-36M LH, SELF PROPELLED MY13	1
10	GA4922221	REAR CABLE MOUNT 24-36M RH, SELF PROPELLED MY13	1
11	GA5017659	WASHER 1 FLAT ZP HD (5mm THICK)	4
12	GA5017653	WASHER 1 1/8 X 2 1/2 X 7G FLAT SS	8
13	GA5078123	O-RING UNO 3/4", ROD-UN12	2
14	GA4551930	MACHINED HYDRAULIC FITTING, 3/4" UN O-RING MALE X 3/4" UN O-RING FEMALE, SUIT INTERNAL ORIFICE PLUG.	2
15	GA3500851	PLUG, ORIFICE, 1/16 NPT X 1.0mm	2
16	GA3500700	HYDRAULIC ADAPTOR, ELBOW, 90 DEGREE, 9/16" JIC MALE X 3/4" UN MALE O-RING, S91-0912	2
17	GA3500147	HYDRAULIC ADAPTOR, NIPPLE, 9/16" JIC MALE X 3/4" UN MALE O-RING, S90-0912	2
GA6101310-07 GOLDACRES		CENTRE AND PARALIFT REAR ASSEMBLY, G4, MY24	REV 00.B

Boom Cable Adjuster

REPLACEMENT PARTS			
ITEM	PART NUMBER	DESCRIPTION	QTY
A	GA5070430	NUT M22 LOCK ZP - LH THREAD	-

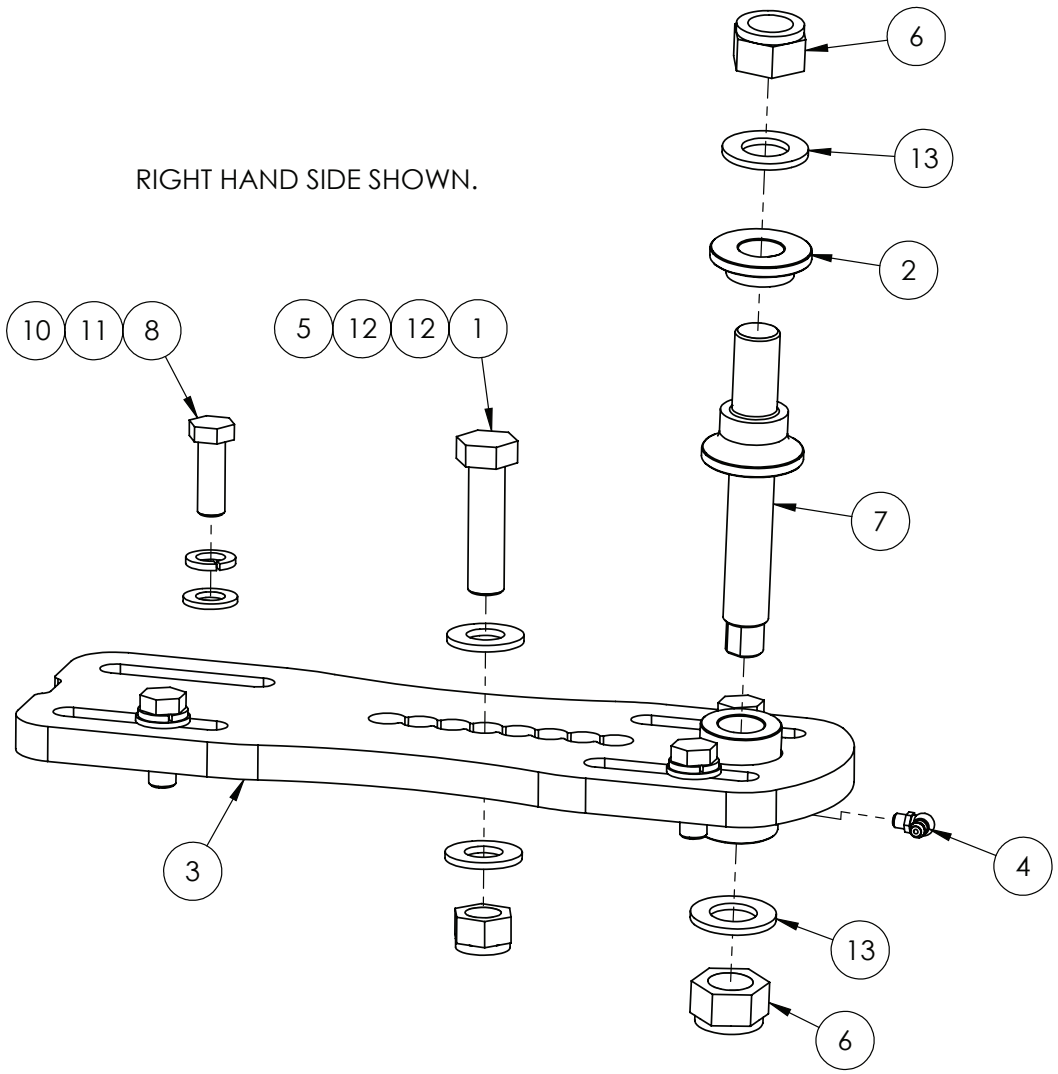

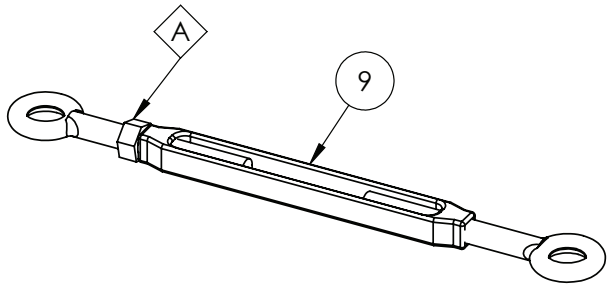

IF DESCRIPTION PREFIX IS ASSEMBLY DRAWING ONLY OR PRODUCTION DRAWING ONLY THE ITEM IS NOT FOR SALE			
ITEM	PART NUMBER	DESCRIPTION	QTY
1	GA5000941	BOLT M16 X 60 GR8.8 ZP	1
2	GA4572515	BOOM CABLE RETAINER, PIVOT PIN MY13	1
3	GA4656251	BOOM CABLE TENSION ADJUST FLAT SP RH	1
	GA4656256	BOOM CABLE TENSION ADJUST FLAT (CC) L/H	1
4	GA5009637	GREASE NIPPLE, ELBOW, 90 DEGREE, 1/4" UNF MALE	1
5	GA5001029	NUT M16 NYLOC ZP	1
6	GA5048125	NUT M20 NYLOC COARSE ZP	2
7	GA4572510	PIVOT PIN, BOOM CABLE MY13	1
8	GA5000311	SET SCREW M12 X 35 GR 8.8 ZP	4
9	GA5017061	TURNBUCKLE, EYE ENDS, M22 THREAD & LOCK NUT, CENTRE LENGTH 335mm, GALVANISED	1
10	GA5000577	WASHER 12mm FLAT SS HD	4
11	GA5000575	WASHER 12mm SPRING SS	4
12	GA5001043	WASHER 16mm FLAT SS HD	2
13	GA5001741	WASHER 20mm FLAT SS HD	2
GA4922221 GOLDACRES		REAR CABLE MOUNT 24-36M RH MY13	REV

Centre Level & Manual Grease Block Mounting

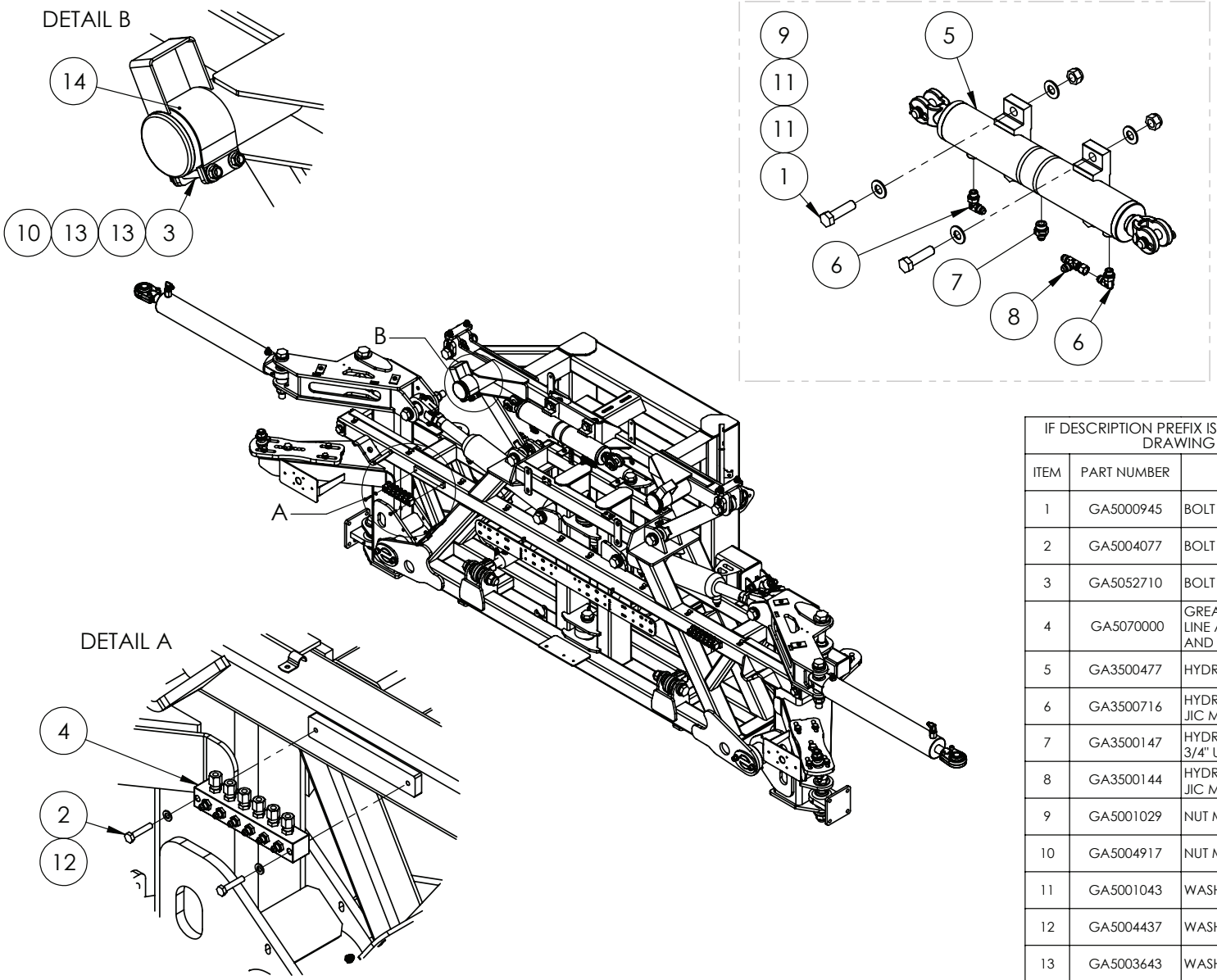

FIT REMOTE GREASE BANK IF OPTIONED (20062)
(SEE SHEET 2 FOR DETAILS)

IF DESCRIPTION PREFIX IS ASSEMBLY DRAWING ONLY OR PRODUCTION DRAWING ONLY THE ITEM IS NOT FOR SALE

ITEM	PART NUMBER	DESCRIPTION	QTY
1	GA5000945	BOLT M16 X 60 GR8.8 SS A2-70	4
2	GA5004077	BOLT M6 X 30 GR8.8 ZP	4
3	GA5052710	BOLT M8 X 65 GR 8.8 ZP	4
4	GA5070000	GREASE FITTING HEADER BLOCK 6 WAY, INC. 6mm LINE ADAPTORS AND STRAIGHT GREASE NIPPLES AND PLUGS	2
5	GA3500477	HYDRAULIC CYLINDER, CENTRE LEVEL 2016	1
6	GA3500716	HYDRAULIC ADAPTOR, ELBOW, 90 DEGREE, 9/16" JIC MALE X 9/16" UN MALE O-RING, S91-0909	2
7	GA3500147	HYDRAULIC ADAPTOR, NIPPLE, 9/16" JIC MALE X 3/4" UN MALE O-RING, S90-0912	1
8	GA3500144	HYDRAULIC ADAPTOR, TEE, 9/16" JIC MALE X 9/16" JIC MALE X 9/16" JIC FEMALE SWIVEL, S67-090909	1
9	GA5001029	NUT M16 NYLOC ZP	4
10	GA5004917	NUT M8 NYLOC ZP	4
11	GA5001043	WASHER 16mm FLAT SS HD	8
12	GA5004437	WASHER 6mm FLAT SS	4
13	GA5003643	WASHER 8mm FLAT SS HD	8
14	GA4506750	WEAR STRIP SS FOR CENTRE LEVELING CABLES	2
GA6101310-08 GOLDACRES		CENTRE AND PARALIFT REAR ASSEMBLY, G4, MY24	REV 00

Boom Centre, Hydraulic Manifold Cover

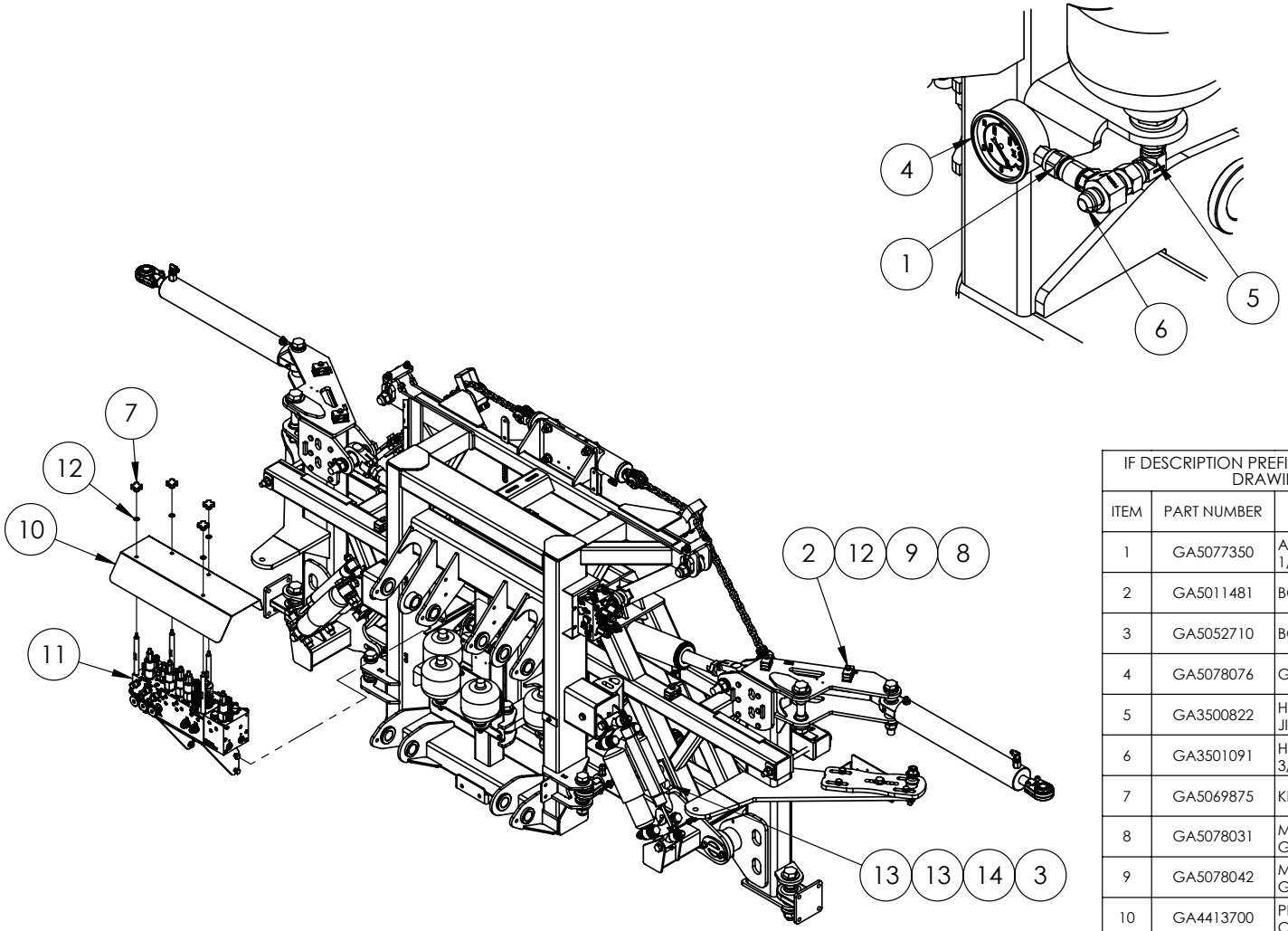

IF DESCRIPTION PREFIX IS ASSEMBLY DRAWING ONLY OR PRODUCTION DRAWING ONLY THE ITEM IS NOT FOR SALE			
ITEM	PART NUMBER	DESCRIPTION	QTY
1	GA5077350	ADAPTOR, DIRECT GAUGE, M16 X 2.0 FEMALE X 1/4" BSPP FEMALE	2
2	GA5011481	BOLT M8 X 35 GR8.8 ZP	9
3	GA5052710	BOLT M8 X 65 GR8.8 ZP	2
4	GA5078076	GAUGE, PRESSURE, 250 BAR, 3500PSI	2
5	GA3500822	HYDRAULIC ADAPTOR ELBOW, 3/4" JIC MALE X 3/4" JIC FEMALE SWIVEL, S15-1212	2
6	GA3501091	HYDRAULIC ADAPTOR, 3/4" JIC FEMALE SWIVEL X 3/4" JIC MALE X TEST POINT, S159-121216	2
7	GA5069875	KNOB-STAR GRIP M8 X 40 DIA	4
8	GA5078031	MOUNTING CLAMP, DOUBLE TYPE, JAW, PAIR, GROUP 2, 14mm, RCD-14J	9
9	GA5078042	MOUNTING CLAMP, DOUBLE TYPE, PLATE, TOP, GROUP 2, RCD-2PT	9
10	GA4413700	PLATE, HYDRAULIC MANIFOLD SOLENOID COVER, CENTRE SECTION, G4 MY24	1
11	GA6101700	PRODUCTION DRAWING ONLY. HYDRAULIC MANIFOLD, BI FOLD, ADD ON MODULE, G4 MY24	1
12	GA5003643	WASHER 8mm FLAT SS HD	13
13	GA5025535	JAW CLAMPS, PAIR, RCD-33.7	2
14	GA5025540	COVER PLATE, RCD-33.7	2
GA6101310-09 GOLDACRES		CENTRE AND PARALIFT REAR ASSEMBLY, G4, MY24	REV 02

Boom Manifold Assembly and Mounting Bracket

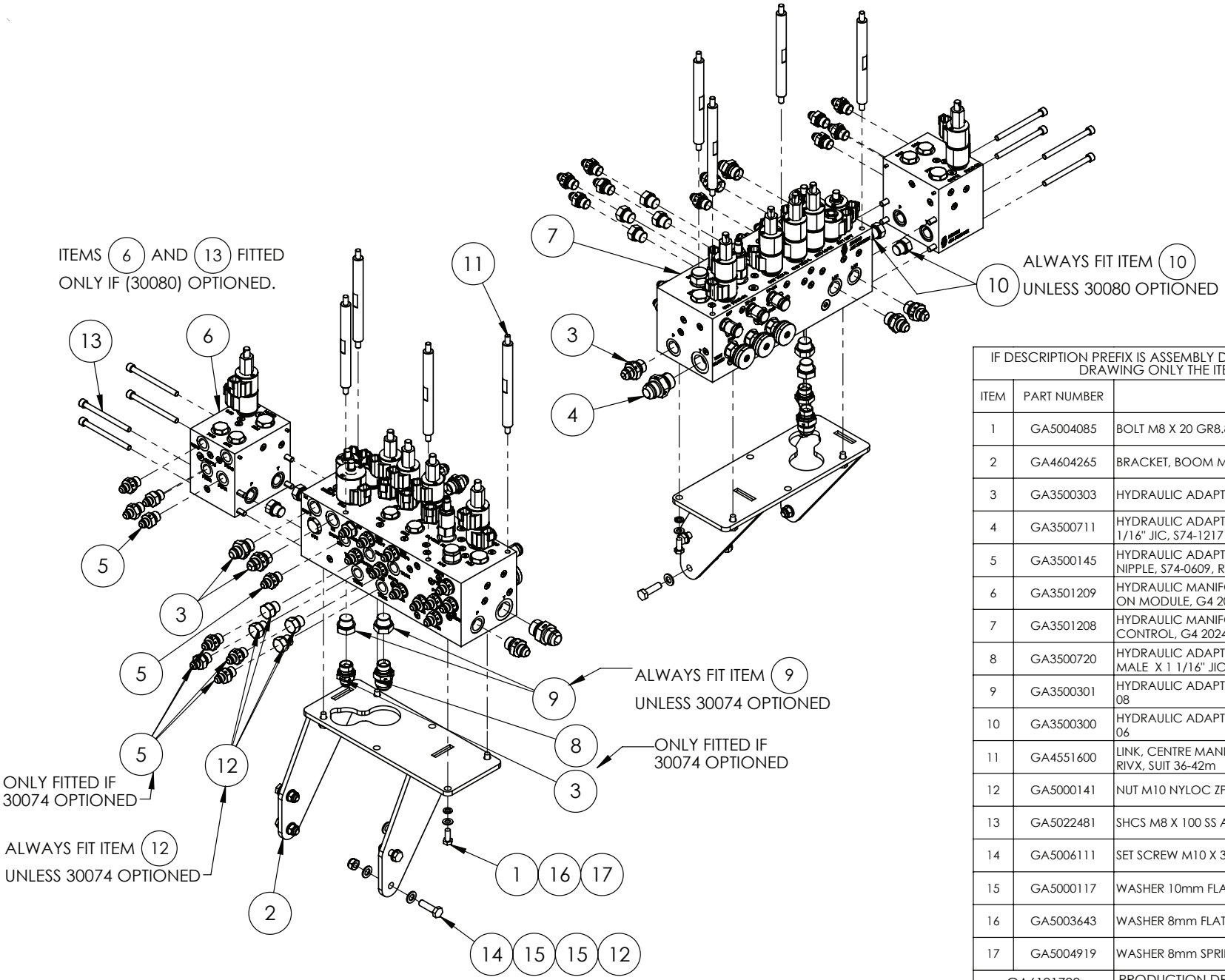

IF DESCRIPTION PREFIX IS ASSEMBLY DRAWING ONLY OR PRODUCTION DRAWING ONLY THE ITEM IS NOT FOR SALE			
ITEM	PART NUMBER	DESCRIPTION	QTY
1	GA5004085	BOLT M8 X 20 GR8.8 ZP	4
2	GA4604265	BRACKET, BOOM MANIFOLD MOUNT, G4 S2	1
3	GA3500303	HYDRAULIC ADAPTOR NIPPLE, 1/2" BSPP TO 3/4" JIC	6
4	GA3500711	HYDRAULIC ADAPTOR NIPPLE, 3/4" BSP O-RING X 1 1/16" JIC, S74-1217	1
5	GA3500145	HYDRAULIC ADAPTOR, 3/8" BSPPOM, 9/16" JICM, NIPPLE, S74-0609, RYCO	20
6	GA3501209	HYDRAULIC MANIFOLD ASSEMBLY, BI FOLD, ADD ON MODULE, G4 2024	1
7	GA3501208	HYDRAULIC MANIFOLD ASSEMBLY, TRITECH BOOM CONTROL, G4 2024	1
8	GA3500720	HYDRAULIC ADAPTER, NIPPLE, 1/2" BSPP O-RING MALE X 1 1/16" JIC MALE, S74-0817	1
9	GA3500301	HYDRAULIC ADAPTOR, PLUG, 1/2" BSPP MALE, S73-08	2
10	GA3500300	HYDRAULIC ADAPTOR, PLUG, 3/8" BSPP MALE, S73-06	6
11	GA4551600	LINK, CENTRE MANIFOLD COVER, SPACER ROD, RIVX, SUIT 36-42m	4
12	GA5000141	NUT M10 NYLOC ZP	4
13	GA5022481	SHCS M8 X 100 SS A2-70	4
14	GA5006111	SET SCREW M10 X 35 GR8.8 ZP	4
15	GA5000117	WASHER 10mm FLAT SS HD	8
16	GA5003643	WASHER 8mm FLAT SS HD	4
17	GA5004919	WASHER 8mm SPRING SS	4
GA6101700 GOLDACRES	PRODUCTION DRAWING ONLY. HYDRAULIC MANIFOLD, BI FOLD, ADD ON MODULE, G4 MY24		REV 00.D

Raven XRT Hydraulic Manifold & Centre Level Chain Mounting

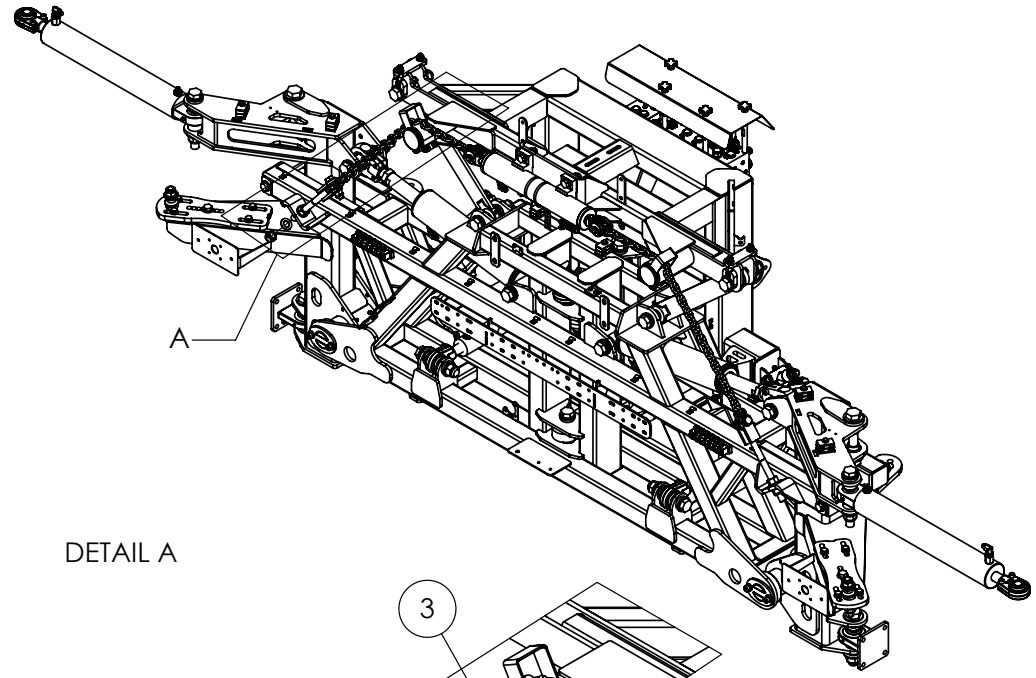

DETAIL A

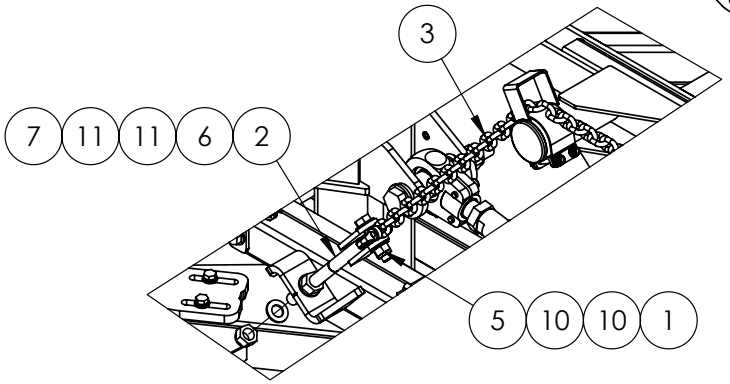

ITEMS IN DETAIL A ONLY
FITTED IF (30080) OPTIONED.

DETAIL B

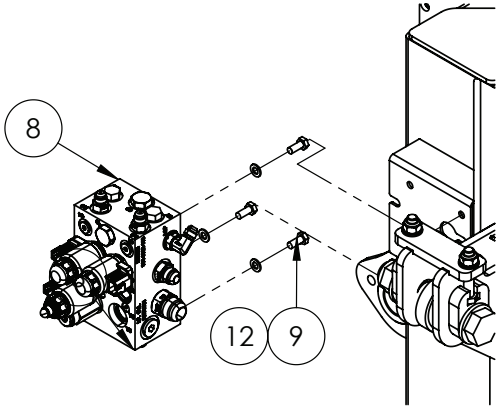

ITEMS IN DETAIL B ONLY
FITTED IF (30074) OPTIONED.

IF DESCRIPTION PREFIX IS ASSEMBLY DRAWING ONLY OR PRODUCTION DRAWING ONLY THE ITEM IS NOT FOR SALE			
ITEM	PART NUMBER	DESCRIPTION	QTY
1	GA5000949	BOLT M16 X 70 GR8.8 ZP	2
2	GA5020320	CABLE ADJUSTER 20mm THREADED	2
3	GA0500097	CHAIN ASSEMBLY, CENTRE LEVEL, 860mm EYE TO EYE, 8mm WITH EYELETS	2
4	GA5078031	MOUNTING CLAMP, DOUBLE TYPE, JAW, PAIR, GROUP 2, 14mm, RCD-14J	9
5	GA5001029	NUT M16 NYLOC ZP	2
6	GA5001709	NUT M20 COARSE ZP	2
7	GA5048125	NUT M20 NYLOC COARSE ZP	2
8	GA4951445	PRODUCTION DRAWING ONLY. VALVE, HYDRAULIC, LOAD SENSE, RAVEN XRT ULTRAGLIDE G4 S2	1
9	GA5048485	SET SCREW 5/16 BSW X 3/4 SS A2-70	3
10	GA5001043	WASHER 16mm FLAT SS HD	4
11	GA5001741	WASHER 20mm FLAT SS HD	4
12	GA5003643	WASHER 8mm FLAT SS HD	3
13	GA5025535	JAW CLAMPS, PAIR, RCD-33.7	2
14	GA5025540	COVER PLATE, RCD-33.7	2
GA6101310-09 GOLDACRES		CENTRE AND PARALIFT REAR ASSEMBLY, G4, MY24	REV 02

Raven XRT, Hydraulic Manifold Assembly

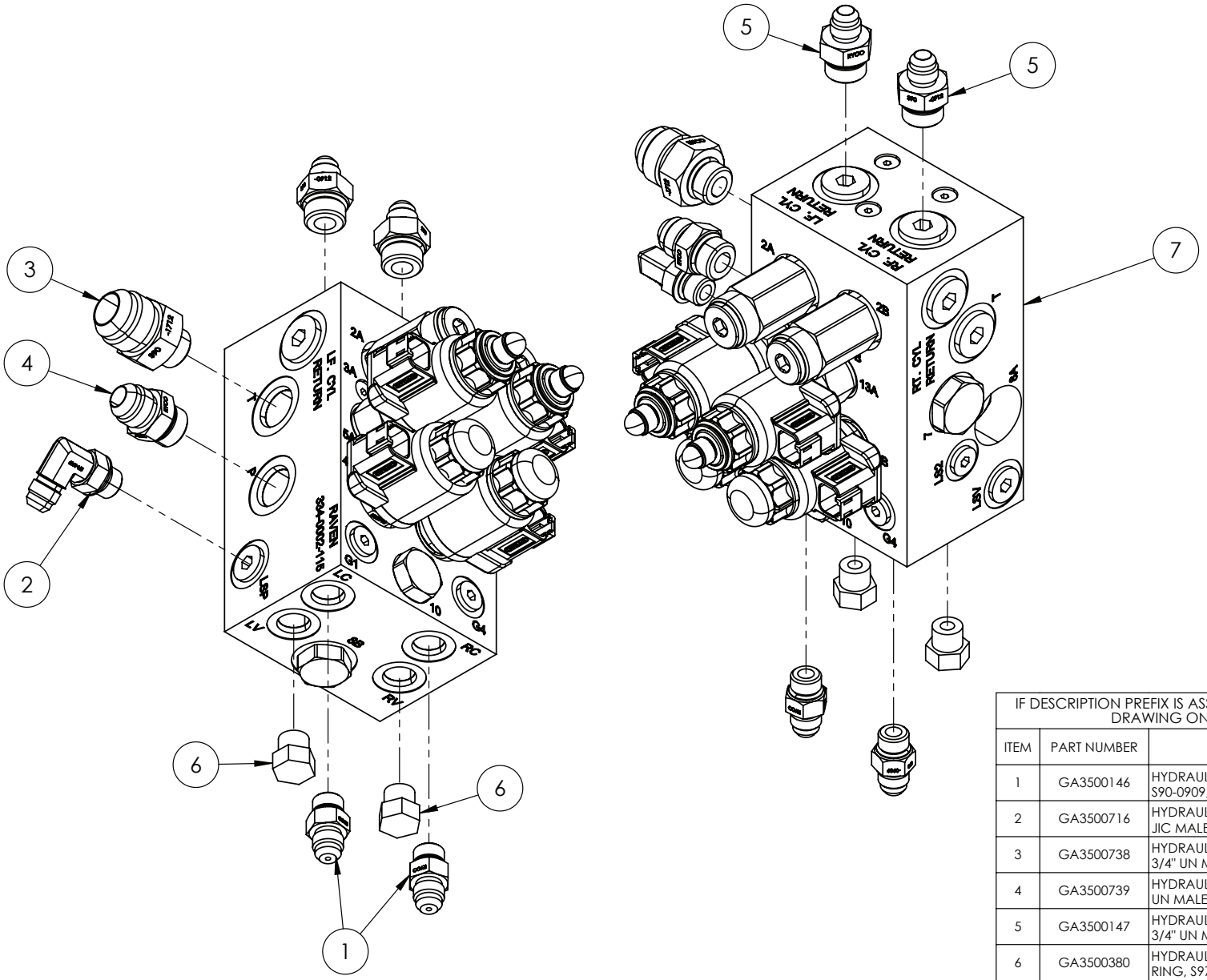

IF DESCRIPTION PREFIX IS ASSEMBLY DRAWING ONLY OR PRODUCTION DRAWING ONLY THE ITEM IS NOT FOR SALE			
ITEM	PART NUMBER	DESCRIPTION	QTY
1	GA3500146	HYDRAULIC ADAPTOR, 9/16" JICM, 9/16" UNOM, S90-0909, RYCO	2
2	GA3500716	HYDRAULIC ADAPTOR, ELBOW, 90 DEGREE, 9/16" JIC MALE X 9/16" UN MALE O-RING, S91-0909	1
3	GA3500738	HYDRAULIC ADAPTOR, NIPPLE, 1 1/16" JIC MALE X 3/4" UN MALE O-RING, S90-1712	1
4	GA3500739	HYDRAULIC ADAPTOR, NIPPLE, 3/4" JIC MALE X 3/4" UN MALE O-RING, S90-1212	1
5	GA3500147	HYDRAULIC ADAPTOR, NIPPLE, 9/16" JIC MALE X 3/4" UN MALE O-RING, S90-0912	2
6	GA3500380	HYDRAULIC ADAPTOR, PLUG, 9/16" UN MALE O-RING, S97-09	2
7	GA3000385	VALVE, HYDRAULIC, RAVEN XRT ULTRAGLIDE, LOAD SENSE, 334-0235-002	1
GA4951445 GOLDACRES		PRODUCTION DRAWING ONLY. VALVE, HYDRAULIC, LOAD SENSE, RAVEN XRT ULTRAGLIDE G4 S2	REV 00.C

Boom Valves, & Pneumatic Hardware Mounting

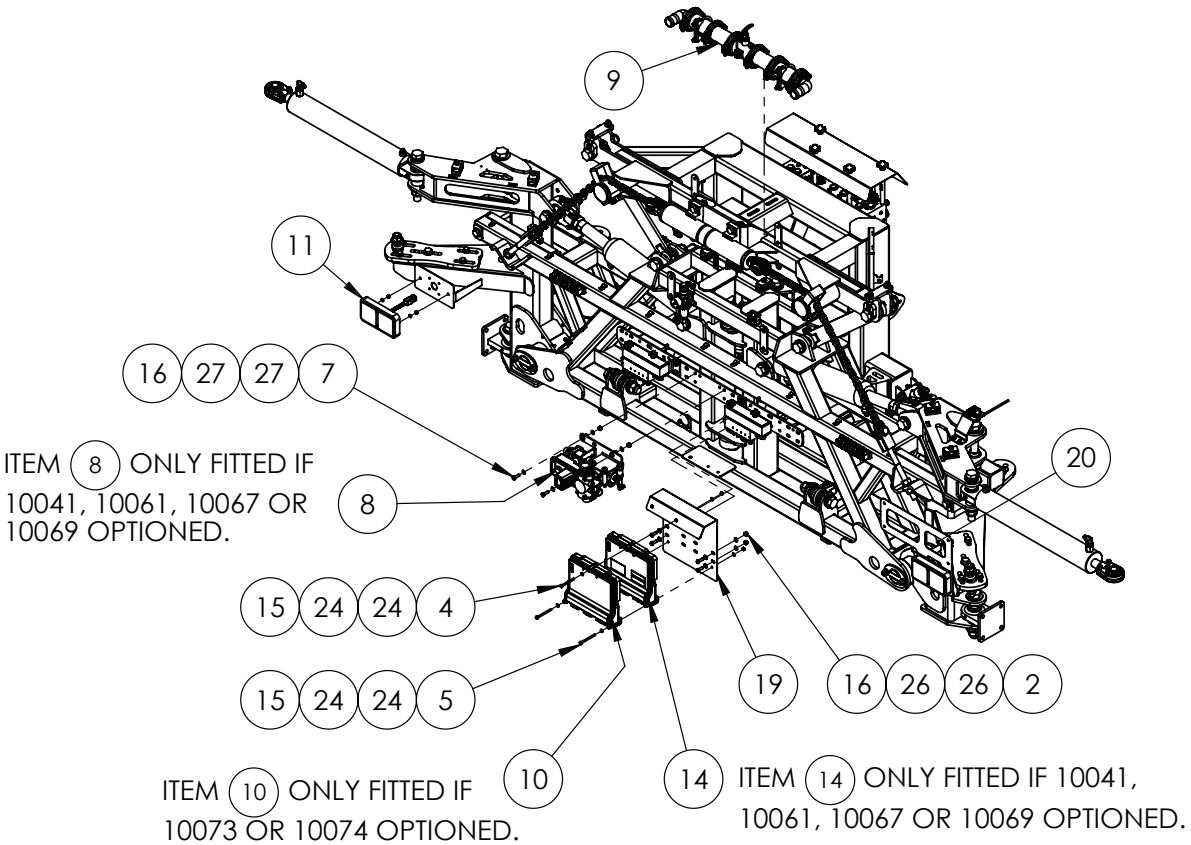

ITEMS IN DETAIL A ONLY FITTED IF 26020 OPTIONED.

DETAIL A

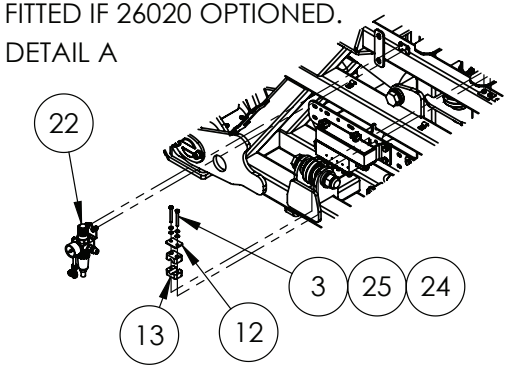

ITEMS IN DETAIL B ONLY FITTED IF 26020 OPTIONED.

DETAIL B

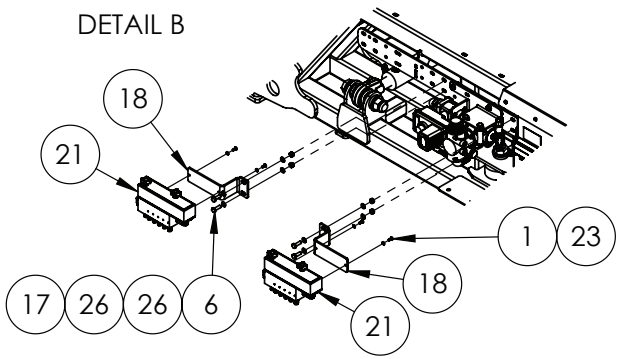

IF DESCRIPTION PREFIX IS ASSEMBLY DRAWING ONLY OR PRODUCTION DRAWING ONLY THE ITEM IS NOT FOR SALE			
ITEM	PART NUMBER	DESCRIPTION	QTY
1	GA0500092	BHCS M5 X 12 GR12.9 ZP	4
2	GA5011473	BHCS M8 X 25 SS A2-70	4
3	GA5004091	BOLT M6 X 50 GR8.8 ZP	2
4	GA0500116	BOLT M6 X 65 SS A2-70	1
5	GA0500115	BOLT M6 X 75 SS A2-70	2
6	GA5004711	BOLT M8 X 25 GR8.8 ZP	4
7	GA5004713	BOLT M8 X 25 SS A2-70	2
8	GA4949455	FLOW DISTRIBUTER AND BOOM RECIRCULATION VALVE ASSEMBLY,G6, MY20	1
9	GA4949215	FLOW METER ASSEMBLY, LONG, RAVEN 60P HIGH PULSE WITH DEUTSCH CONNECTOR, 1 1/2" HOSE BARBS, SUIT RCM ISO BUS	1
10	GA3000510	ISO NODE, RCM, HAWKEYE 2 HD, GOLDACRES, RAVEN, 063-0173-956	1
11	GA3000249	LED TAIL LIGHT, LARGE WITH CONNECTOR	2
12	GA5078068	MOUNTING CLAMP, SINGLE TYPE, PLATE, TOP, GROUP 2	1
13	GA5078058	MOUNTING CLAMP, SINGLE TYPE, JAW, PAIR, GROUP 3, 14mm, RCS-14J	2
14	GA3000202	NODE, RCM, ISOBUS, RATE CONTROL MODULE, LEVEL 2 3TS UNLOCK, RAVEN, 063-0173-942	1
15	GA5048115	NUT M6 NYLOC ZP	3
16	GA5052590	NUT M8 NYLOC SS	6
17	GA5004917	NUT M8 NYLOC ZP	4
18	GA4412365	PLATE, BRACKET, PNEUMATIC MANIFOLD BULLET VALVE MOUNT, MY22	2
19	GA4404570	PLATE, MOUNT, RCM NODE	1
20	GA4504300	PLATE, NUMBER PLATE MOUNT, BOLT ON, SUIT TAIL LIGHT, SP 2011 ON	1
21	GA7000029	PNEUMATIC MANIFOLD, RAPID FIRE, 10 SECTION, BULLET VALVE	2
22	GA4949595	PRODUCTION DRAWING ONLY. AIR PRESSURE REGULATOR, MY20	1
23	GA5003983	WASHER 5mm FLAT SS	4
24	GA5004437	WASHER 6mm FLAT SS	8
25	GA5004447	WASHER 6mm SPRING SS	2
26	GA5003643	WASHER 8mm FLAT SS HD	16
27	GA5003651	WASHER 8mm FLAT SS	4
GA6101310-10 GOLDACRES		CENTRE AND PARALIFT REAR ASSEMBLY, G4, MY24	REV 00.B

Flow Distributer & Boom Recirculation Valve Assembly

OPTIONAL PARTS			
ITEM	PART NUMBER	DESCRIPTION	QTY
A	GA5077047	REPLACEMENT 12V MOTOR, SUIT TEEJET VALVE GA5077319, BARE WIRES, BEC POS 50515-22CP05	-

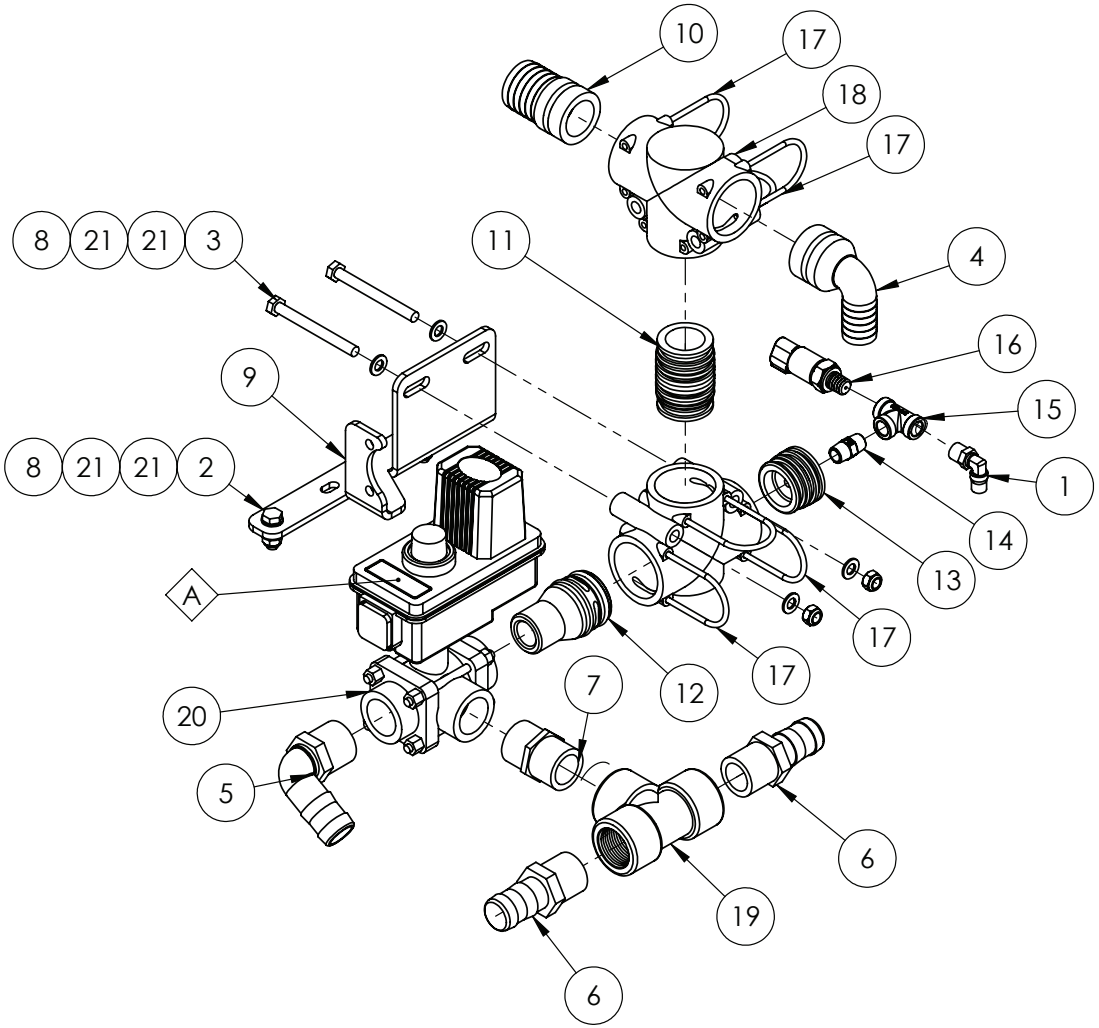

IF DESCRIPTION PREFIX IS ASSEMBLY DRAWING ONLY OR PRODUCTION DRAWING ONLY THE ITEM IS NOT FOR SALE			
ITEM	PART NUMBER	DESCRIPTION	QTY
1	GA5016233	PNEUMATIC FITTING, ELBOW, 90 DEGREE, 1/4 BSP MALE X 6mm PUSH IN TYPE, METAL	1
2	GA5004711	BOLT M8 X 25 GR8.8 ZP	2
3	GA5004749	BOLT M8 X 80 GR8.8 ZP	2
4	GA5065615	HOSE BARB, ELBOW 90 DEGREE, AS40 X 25mm, ALTEK	1
5	GA5077723	HOSE BARB, ELBOW, 90 DEGREE, 1" MALE X 1" HOSE, BANJO	1
6	GA5077718	HOSE BARB, STRAIGHT, 1 MALE THREAD X 1 HOSE, BANJO	2
7	GA5077914	NIPPLE, SHORT, 1" MALE THREAD X 1" MALE THREAD, BANJO	1
8	GA5004917	NUT M8 NYLOC ZP	4
9	GA4400975	PLATE, BRACKET, FLOW DISTRIBUTER AND BOOM RECIRCULATION VALVE ASSEMBLY, 48M	1
10	GA5065590	PLUG IN HOSE TAIL AS40/39	1
11	GA5065735	PLUG IN HOSE TAIL AS40/AS40	1
12	GA2000077	PLUMBING FITTING, AS40 TO 1" NPT MALE THREAD, ALTEK	1
13	GA4582160	PLUMBING ADAPTOR, PLUG, AS40 MALE X G1/4" FEMALE THREAD, ALTEK	1
14	GA2000278	PLUMBING FITTING, NIPPLE, 1/4" BSPT, SS, STAINLESS STEEL, 150 PSI	1
15	GA2000279	PLUMBING FITTING, TEE, 1/4" FEMALE, BSP, SS, STAINLESS STEEL, 150 PSI	1
16	GA3000199	PRESSURE TRANSDUCER, 0-250PSI, 1-5V, DEUTSCH, SEALED, RAVEN, 4220000119	1
17	GA5065690	RETAINING PIN, SAFETY CLIP, SUIT AS40 PLUMBING FITTINGS, ALTEK	6
18	GA5065555	TEE, 3 PORT, AS40 FEMALE, NO M8 INSERTS, ALTEK	2
19	GA5078151	TEE, THREADED, 1" FEMALE, BANJO	1
20	GA5077319	VALVE, ELECTRIC BALL 3 WAY, SHUTOFF/BYPASS, 1", TEEJET, 344BEC-34-COC	1
21	GA5003643	WASHER 8mm FLAT SS HD	8
GA4949455 GOLDACRES		FLOW DISTRIBUTER AND BOOM RECIRCULATION VALVE ASSEMBLY,G6, MY20	REV 01

Air Pressure Regulator

REPLACEMENT PARTS			
ITEM	PART NUMBER	DESCRIPTION	QTY
A	GA5054620	BOWL C/W DRAIN, SUIT AIR DRYER / OILER GA5068806	-

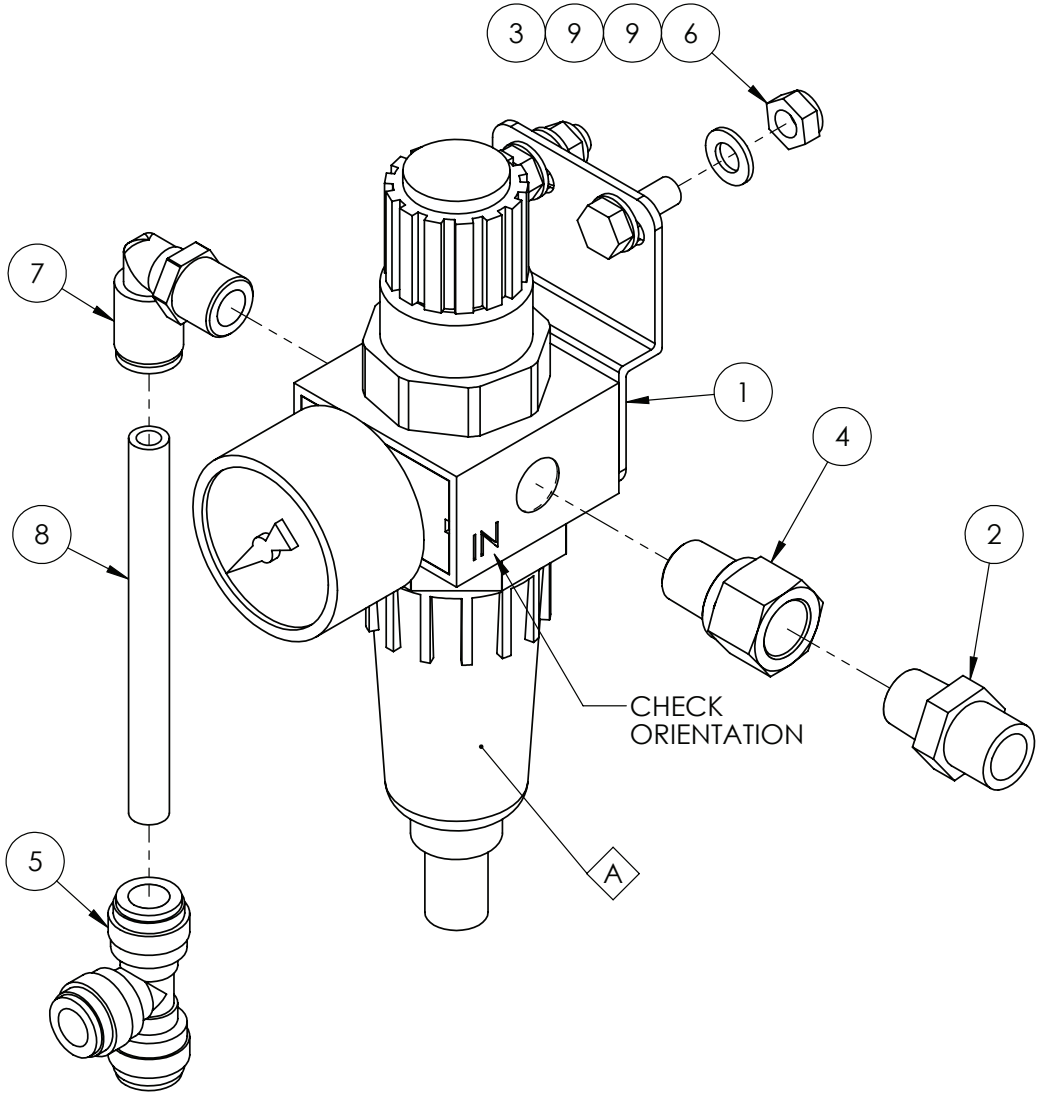

IF DESCRIPTION PREFIX IS ASSEMBLY DRAWING ONLY OR PRODUCTION DRAWING ONLY THE ITEM IS NOT FOR SALE			
ITEM	PART NUMBER	DESCRIPTION	QTY
1	GA5078550	AIR FILTER REGULATOR, G1/4, SEMI AUTO DRAIN, C/W BRACKET, LEGRIS 6700.04.13	1
2	GA5078517	AIR FITTING, STRAIGHT, 3/8" TUBE, 1/4" NPT MALE, PUSH IN, BRASS, ALKON - AQ68-DOT-6X4	1
3	GA5004041	BOLT M6 X 16 GR8.8 ZP	2
4	GA5024510	BRASS ADAPTOR, 1/4" BSPP MALE TO 1/4" NPT FEMALE	1
5	GA5067010	EQUAL TEE PUSH IN 8mm	1
6	GA5048115	NUT M6 NYLOC ZP	2
7	GA5052690	PNEUMATIC FITTING, ELBOW, 90 DEGREE, 1/4 BSP MALE X 8mm PUSH TYPE, METAL	1
8	GA7000017	TUBE, NYLON, 8mm, BLACK, GA5004382 X 90mm	1
9	GA5004437	WASHER 6mm FLAT SS	4
GA4949595 GOLDACRES		PRODUCTION DRAWING ONLY. AIR PRESSURE REGULATOR, MY20	REV 00

Lower Limit Switch Assembly

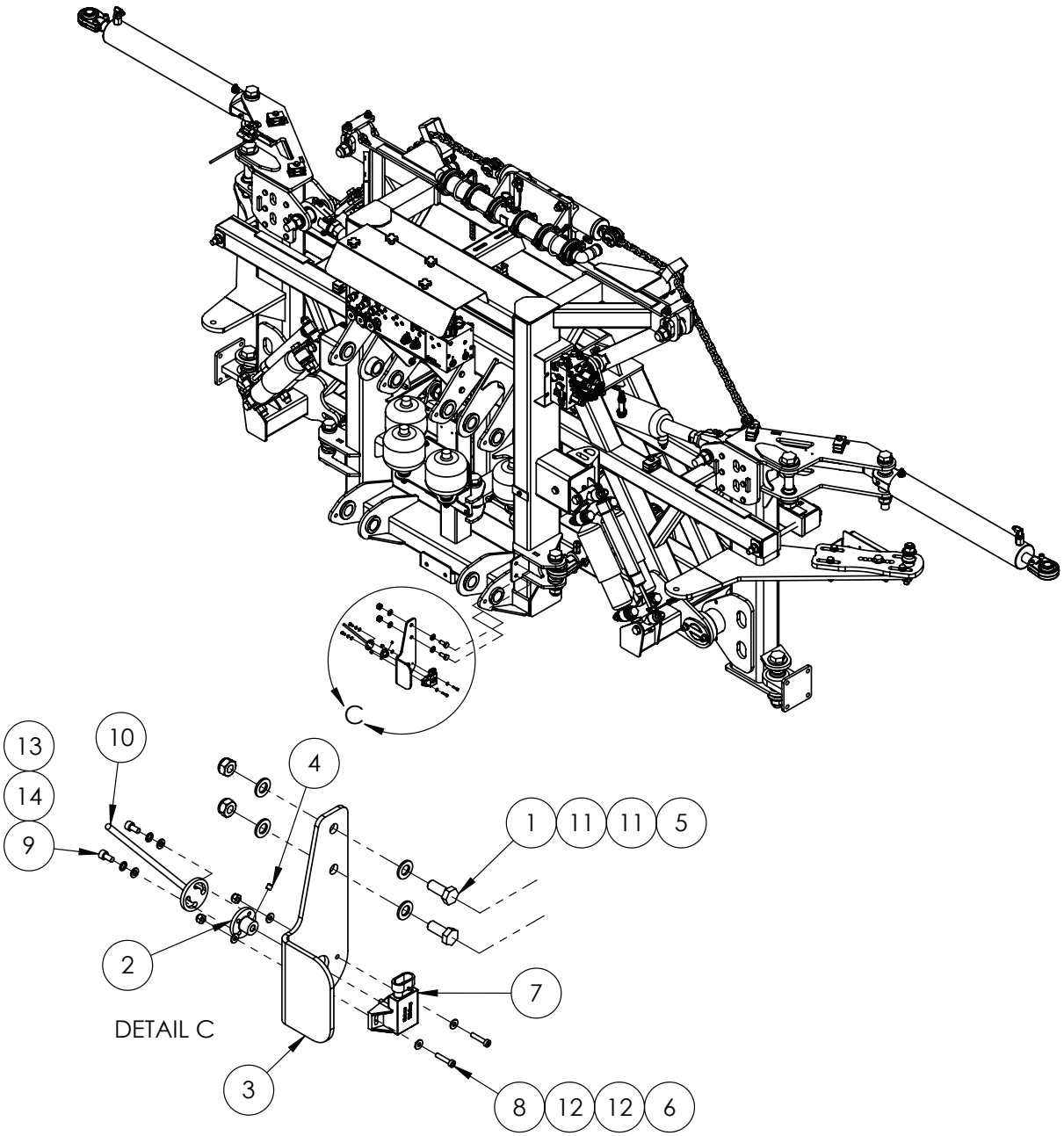

IF DESCRIPTION PREFIX IS ASSEMBLY DRAWING ONLY OR PRODUCTION DRAWING ONLY THE ITEM IS NOT FOR SALE			
ITEM	PART NUMBER	DESCRIPTION	QTY
1	GA5079079	BOLT M10 X 25 GR8.8 ZP	2
2	GA4552855	BUSH-TILT SENSOR SWITCH SP 2011	1
3	GA4537180	LIFT HEIGHT SENSOR BRACKET LYKKETRONIC	1
4	GA5069970	M5 GRUB SCREW X 5mm LONG S/S	1
5	GA5000141	NUT M10 NYLOC ZP	2
6	GA5049025	NUT M4 NYLOC SS	2
7	GA5069457	POTENTIOMETER, 120 DEGREE, ELOBAU, GATMC	1
8	GA5069375	SHCS M4 X 20 SS 304	2
9	GA5069975	SHCS M5 X 10 SS A2-70	2
10	GA4659191	TILT SENSOR ARM-PARA LIFT ARMS SP 2011	2
11	GA5000117	WASHER 10mm FLAT SS HD	4
12	GA5020510	WASHER 4mm FLAT SS	4
13	GA5003983	WASHER 5mm FLAT SS	2
14	GA5003629	WASHER 5mm SPRING SS	2
GA6101310-10 GOLDACRES	CENTRE AND PARALIFT REAR ASSEMBLY, G4, MY24		REV 00.B

Boom Height Switch Assembly

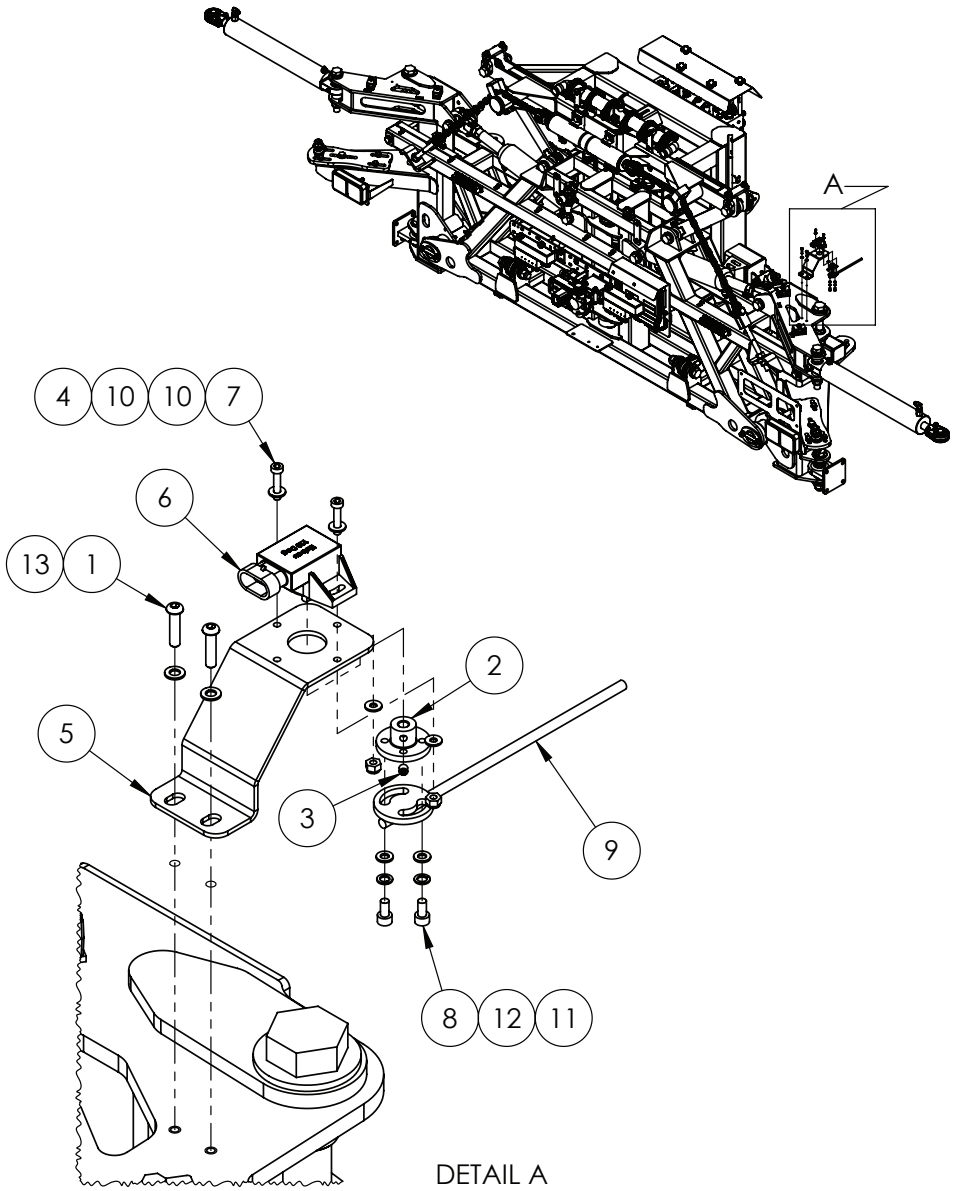

IF DESCRIPTION PREFIX IS ASSEMBLY DRAWING ONLY OR PRODUCTION DRAWING ONLY THE ITEM IS NOT FOR SALE			
ITEM	PART NUMBER	DESCRIPTION	QTY
1	GA5004067	BHCS M6 x 25 SS A2-70	2
2	GA4552855	BUSH-TILT SENSOR SWITCH SP 2011	1
3	GA5069970	M5 GRUB SCREW X 5mm LONG S/S	1
4	GA5049025	NUT M4 NYLOC SS	2
5	GA4403655	PLATE, BRACKET, TILT SENSOR, 48m BOOM	1
6	GA5069457	POTENTIOMETER, 120 DEGREE, ELOBAU, GATMC	1
7	GA5069375	SHCS M4 X 20 SS 304	2
8	GA5069975	SHCS M5 X 10 SS A2-70	2
9	GA4659191	TILT SENSOR ARM-PARA LIFT ARMS SP 2011	1
10	GA5020510	WASHER 4mm FLAT SS	4
11	GA5003983	WASHER 5mm FLAT SS	2
12	GA5003629	WASHER 5mm SPRING SS	2
13	GA5004437	WASHER 6mm FLAT SS	2
GA6101310-10 GOLDACRES		CENTRE AND PARALIFT REAR ASSEMBLY, G4, MY24	REV 00.B

Boom Centre, Rear View Camera & Work Light Mounting

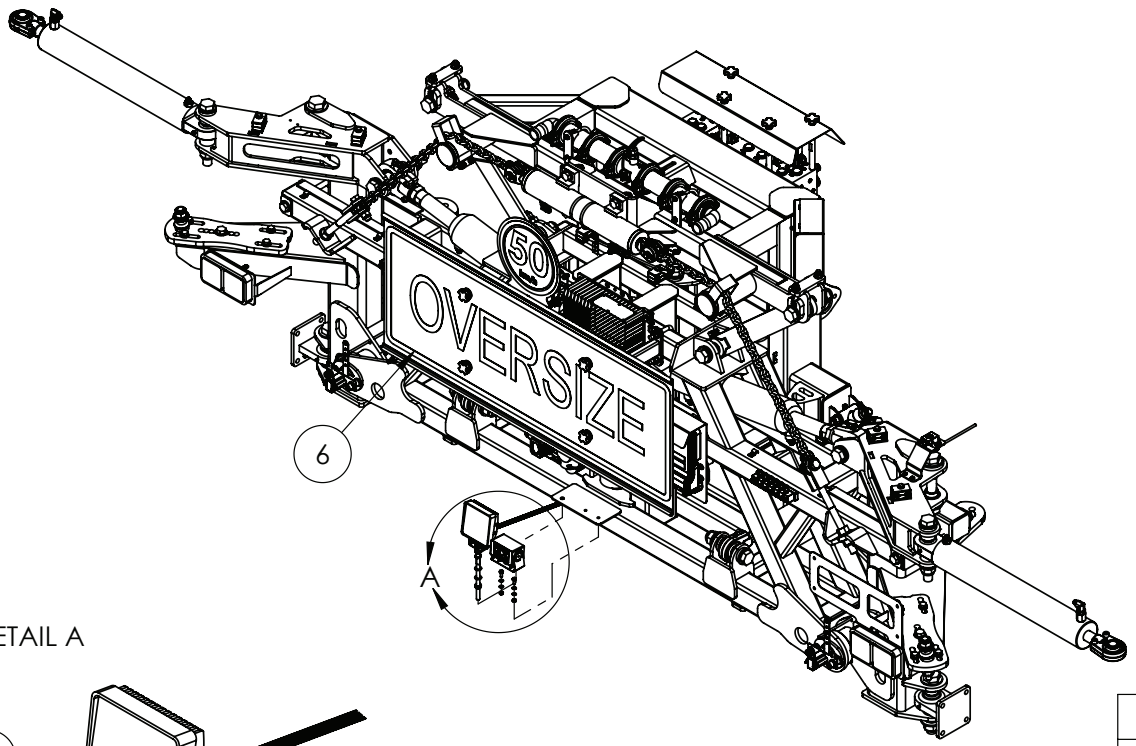

DETAIL A

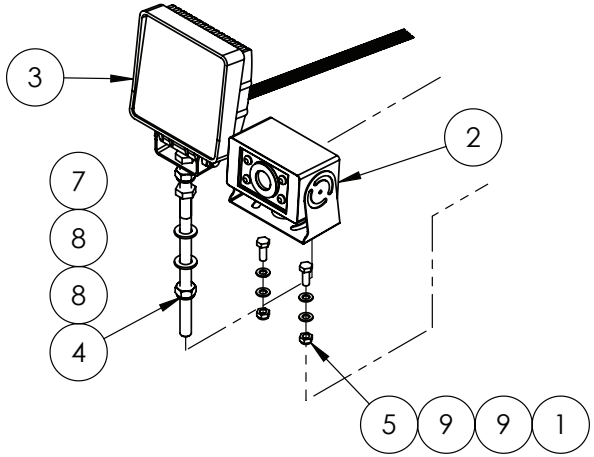

IF DESCRIPTION PREFIX IS ASSEMBLY DRAWING ONLY OR PRODUCTION DRAWING ONLY THE ITEM IS NOT FOR SALE			
ITEM	PART NUMBER	DESCRIPTION	QTY
1	GA5004041	BOLT M6 X 16 GR8.8 ZP	2
2	GA3000910	CAMERA, REAR VIEW, 92 DEG CCD, WITH BRACKET, RKSCAM3	1
3	GA4913495	LIGHT, POD WORK LIGHT ASSEMBLY, LED, FLOOD BEAM	1
4	GA5000141	NUT M10 NYLOC ZP	1
5	GA5048115	NUT M6 NYLOC ZP	2
6	GA4951995	PRODUCTION DRAWING ONLY, OVERSIZE SIGN, LF PRAIRIE SPECIAL, S2 MY22	1
7	GA5006161	SET SCREW M10 X 25 GR8.8 ZP	1
8	GA5000117	WASHER 10mm FLAT SS HD	2
9	GA5004437	WASHER 6mm FLAT SS	4
GA6101310-12 GOLDACRES		CENTRE AND PARALIFT REAR ASSEMBLY, G4, MY24	REV 00

Boom Centre, Spray Bar & Turnbuckles

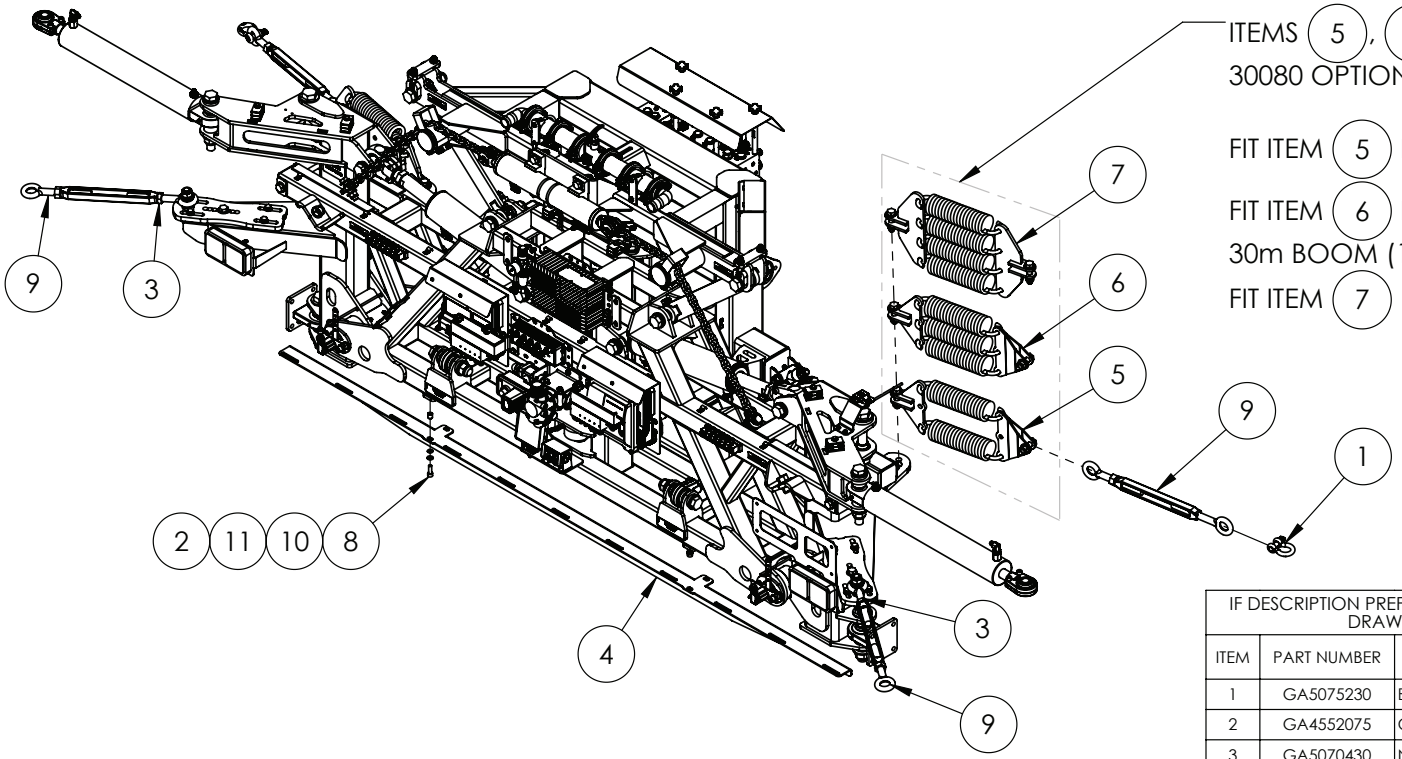

ITEMS (5), (6) OR (7) FITTED UNLESS 30080 OPTIONED.

FIT ITEM (5) IF 24m BOOM (10162) OPTIONED.

FIT ITEM (6) IF 28m BOOM (10168) OR 30m BOOM (10174) OPTIONED.

FIT ITEM (7) IF 36m BOOM (10180) OPTIONED.

IF DESCRIPTION PREFIX IS ASSEMBLY DRAWING ONLY OR PRODUCTION DRAWING ONLY THE ITEM IS NOT FOR SALE

ITEM	PART NUMBER	DESCRIPTION	QTY
1	GA5075230	BOW SHACKLE 13mm WLL 3.25T BLACK	2
2	GA4552075	CRUSH TUBE, 10.2 ID X 15 OD X 15 mm LONG	4
3	GA5070430	NUT M22 LOCK NUT ZP LH THREAD	2
4	GA4404885	PLATE, SPRAY BAR, ALUMINIUM, TRITECH	1
5	GA4903057	PRODUCTION DRAWING ONLY. PRE-ASSEMBLED BOOM CABLE SPRING/DAMPER SUIT 24M	2
6	GA4903067	PRODUCTION DRAWING ONLY. PRE-ASSEMBLED BOOM CABLE SPRING/DAMPER SUIT 28-30M (3 SPRINGS)	2
7	GA4905665	PRODUCTION DRAWING ONLY. 36m CABLE SPRING MOUNTING MY13	2
8	GA5006129	SHCS M10 X 30 GR12.9 ZP	4
9	GA5017061	TURNBUCKLE, EYE ENDS, M22 THREAD & 2X LOCK NUT, CENTRE LENGTH 335mm, GALVANISED	4
10	GA5000117	WASHER 10mm FLAT SS HD	4
11	GA5000137	WASHER 10mm SPRING SS	4
GA6101310-13 GOLDACRES		CENTRE AND PARALIFT REAR ASSEMBLY, G4, MY24	REV 01

Boom Cable Spring Damper, 24mt

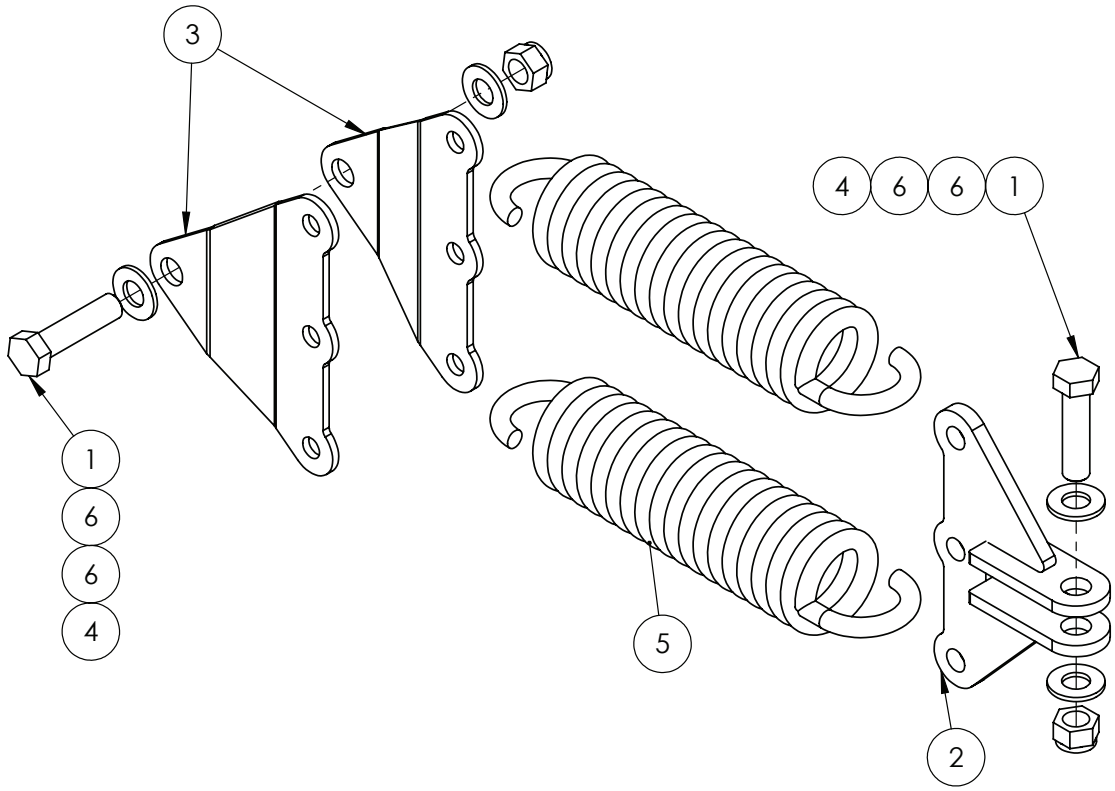

IF DESCRIPTION PREFIX IS ASSEMBLY DRAWING ONLY OR PRODUCTION DRAWING ONLY THE ITEM IS NOT FOR SALE			
ITEM	PART NUMBER	DESCRIPTION	QTY
1	GA5000947	BOLT M16 X 65 GR8.8 ZP	2
2	GA4656230	CABLE SPRING SHOCKER MOUNT SUB ASSEM	1
3	F70057A	DELTA BOOM SPRING PLATE	2
4	GA5001029	NUT M16 NYLOC ZP	2
5	GA5010793	SPRING, TENSION, 70 OD X 329 LONG X 12mm, LARGE, SUIT DELTA BOOM YAW / CABLE	2
6	GA5001043	WASHER 16mm FLAT SS HD	4
GA4903057 GOLDACRES		PRODUCTION DRAWING ONLY. PRE-ASSEMBLED BOOM CABLE SPRING/DAMPER SUIT 24M	REV 00

Boom Cable Spring Damper, 28mt - 30mt

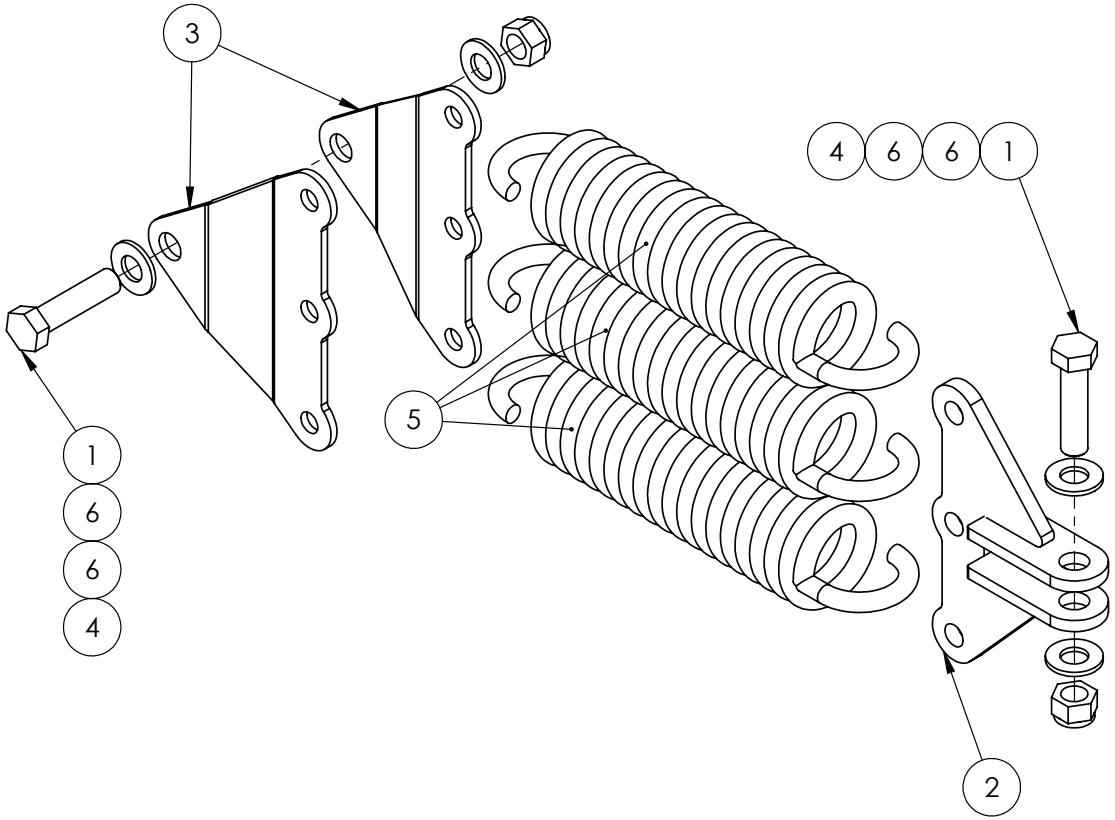

IF DESCRIPTION PREFIX IS ASSEMBLY DRAWING ONLY OR PRODUCTION DRAWING ONLY THE ITEM IS NOT FOR SALE			
ITEM	PART NUMBER	DESCRIPTION	QTY
1	GA5000947	BOLT M16 X 65 GR8.8 ZP	2
2	GA4656230	CABLE SPRING SHOCKER MOUNT SUB ASSEM	1
3	F70057A	DELTA BOOM SPRING PLATE	2
4	GA5001029	NUT M16 NYLOC ZP	2
5	GA5010793	SPRING, TENSION, 70 OD X 329 LONG X 12mm, LARGE, SUIT DELTA BOOM YAW / CABLE	3
6	GA5001043	WASHER 16mm FLAT SS HD	4
GA4903067 GOLDACRES		PRODUCTION DRAWING ONLY. PRE-ASSEMBLED BOOM CABLE SPRING/DAMPER SUIT 28-30M (3 SPRINGS)	REV 00

Boom Cable Spring Damper, 36mt

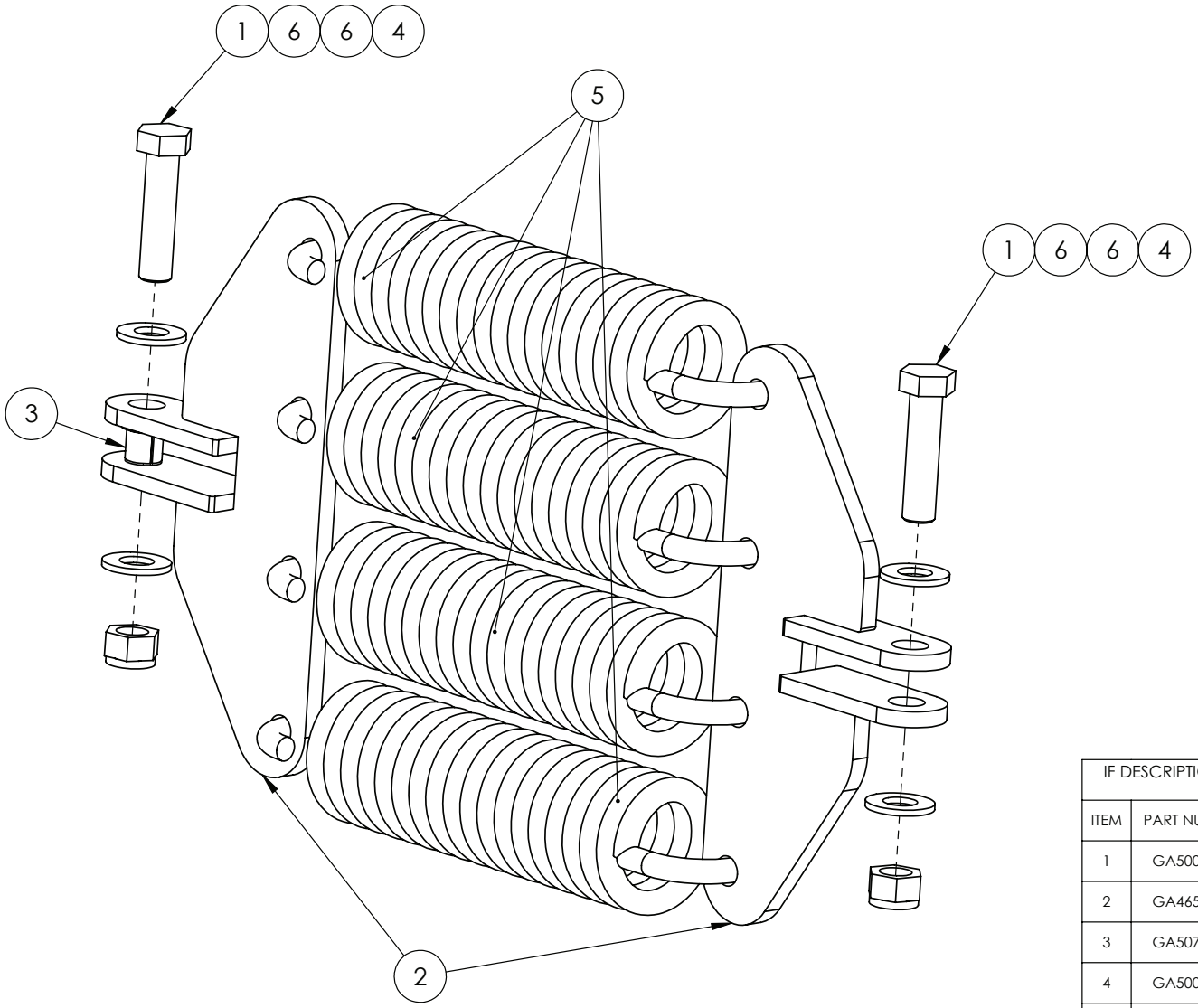

IF DESCRIPTION PREFIX IS ASSEMBLY DRAWING ONLY OR PRODUCTION DRAWING ONLY THE ITEM IS NOT FOR SALE			
ITEM	PART NUMBER	DESCRIPTION	QTY
1	GA5000947	BOLT M16 X 65 GR8.8 ZP	2
2	GA4659710	CABLE SPRING MOUNT SUB ASM	2
3	GA5075220	GLACIER BUSH FLANGED 16mm SUIT BOOM CABLE PIVOT	1
4	GA5001029	NUT M16 NYLOC ZP	2
5	GA5010793	SPRING, TENSION, 70 OD X 329 LONG X 12mm, LARGE, SUIT DELTA BOOM YAW / CABLE	4
6	GA5001043	WASHER 16mm FLAT SS HD	4
GA4905665 GOLDACRES		PRODUCTION DRAWING ONLY. 36m CABLE SPRING MOUNTING MY13	REV 00

Oversize Sign

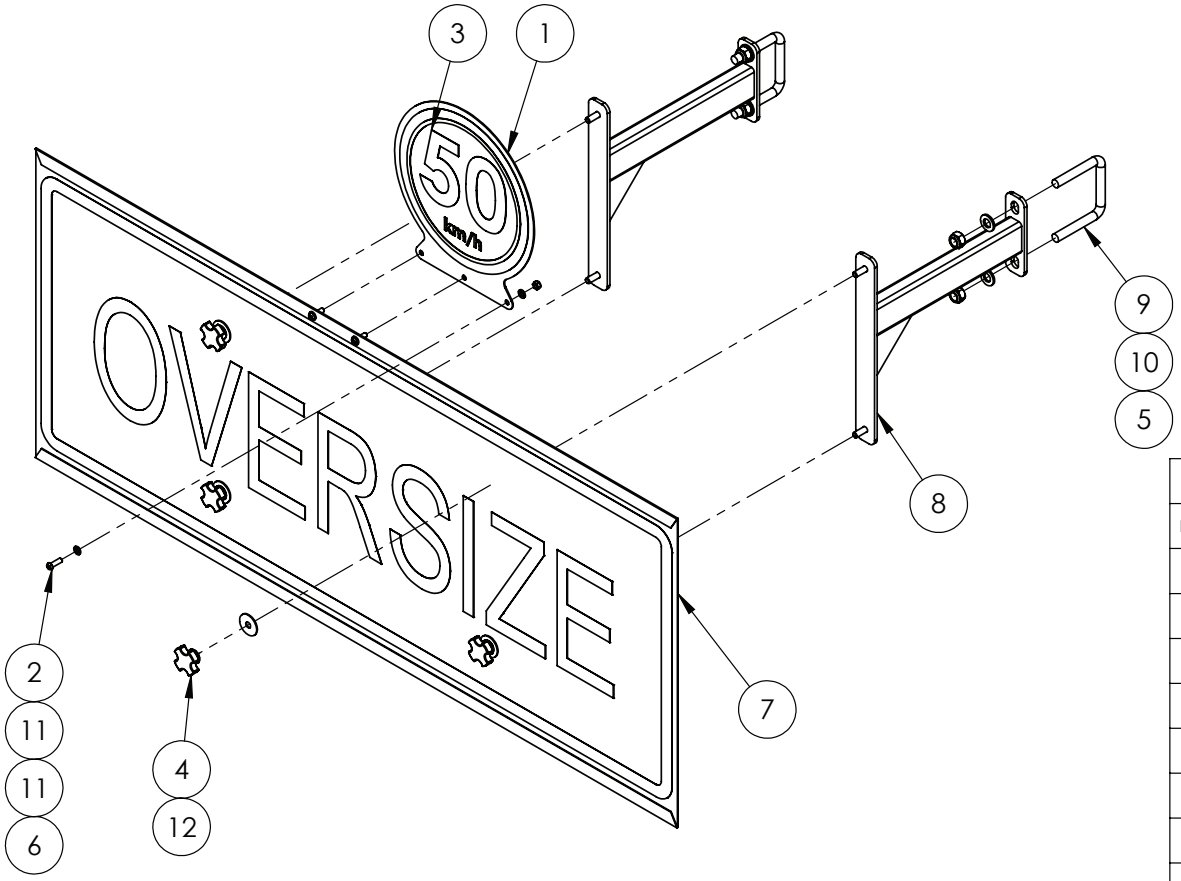

IF DESCRIPTION PREFIX IS ASSEMBLY DRAWING ONLY OR PRODUCTION DRAWING ONLY THE ITEM IS NOT FOR SALE			
ITEM	PART NUMBER	DESCRIPTION	QTY
1	F70906A	50km/H STICKER HOLDER PLATE 1.6mm SS	1
2	GA5004053	BHCS M6 X 20 SS A2-70	3
3	GA5063830	DECAL, 50km/H	1
4	GA5069875	KNOB-STAR GRIP M8 X 40 DIA	4
5	GA5012461	NUT M12 NYLOC ZP	4
6	GA5048115	NUT M6 NYLOC ZP	3
7	GA5009613	OVERSIZE SIGN	1
8	GA4658150	OVERSIZE MOUNT BRACKET SUIT 2011 CENTRE	2
9	GA5075160	U BOLT, SQUARE TOP M12 X 76 X 80	2
10	GA5000577	WASHER 12mm FLAT SS HD	4
11	GA5004437	WASHER 6mm FLAT SS	6
12	GA5003645	WASHER FLAT SS 5-16 X 1 1-4	4
GA4951995 GOLDACRES		PRODUCTION DRAWING ONLY, OVERSIZE SIGN, LF PRAIRIE SPECIAL, S2 MY22	REV 00

12 - Boom Wings

Boom Wings

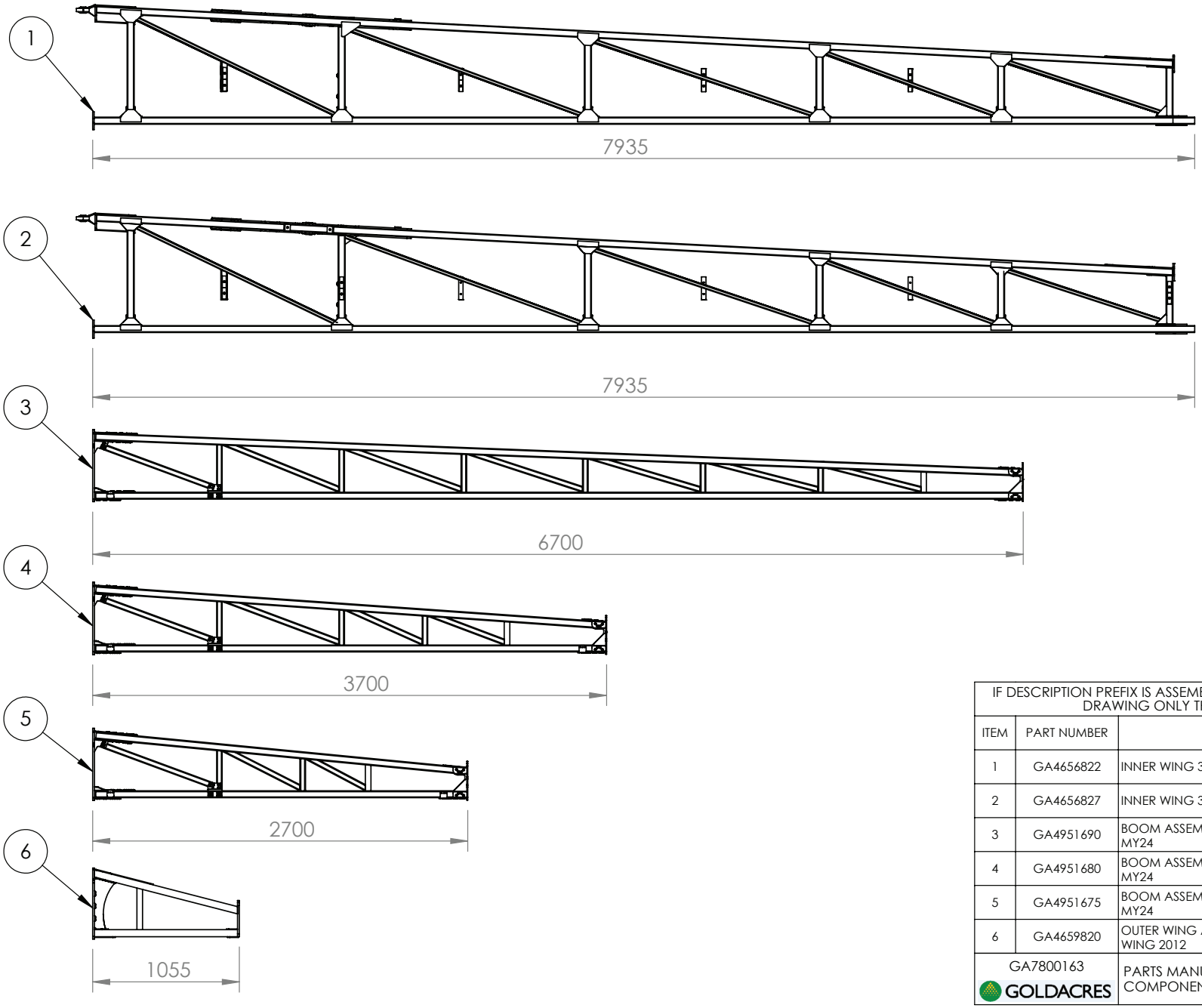

IF DESCRIPTION PREFIX IS ASSEMBLY DRAWING ONLY OR PRODUCTION DRAWING ONLY THE ITEM IS NOT FOR SALE			
ITEM	PART NUMBER	DESCRIPTION	QTY
1	GA4656822	INNER WING 36m RH SUIT SP TRITECH MY17	1
2	GA4656827	INNER WING 36m LH SUIT SP TRITECH MY17	1
3	GA4951690	BOOM ASSEMBLY, OUTER 36M, RIVETED MOUNT, MY24	2
4	GA4951680	BOOM ASSEMBLY, OUTER 30M, RIVETED MOUNT, MY24	2
5	GA4951675	BOOM ASSEMBLY, OUTER 28M, RIVETED MOUNT, MY24	2
6	GA4659820	OUTER WING ALUMINIUM 24M TO SUIT 36M INNER WING 2012	2
GA7800163 GOLDACRES		PARTS MANUAL ONLY. BOOM WING COMPONENTS. TRITECH S2 G4 MY24	REV 00.B

Boom Breakaways

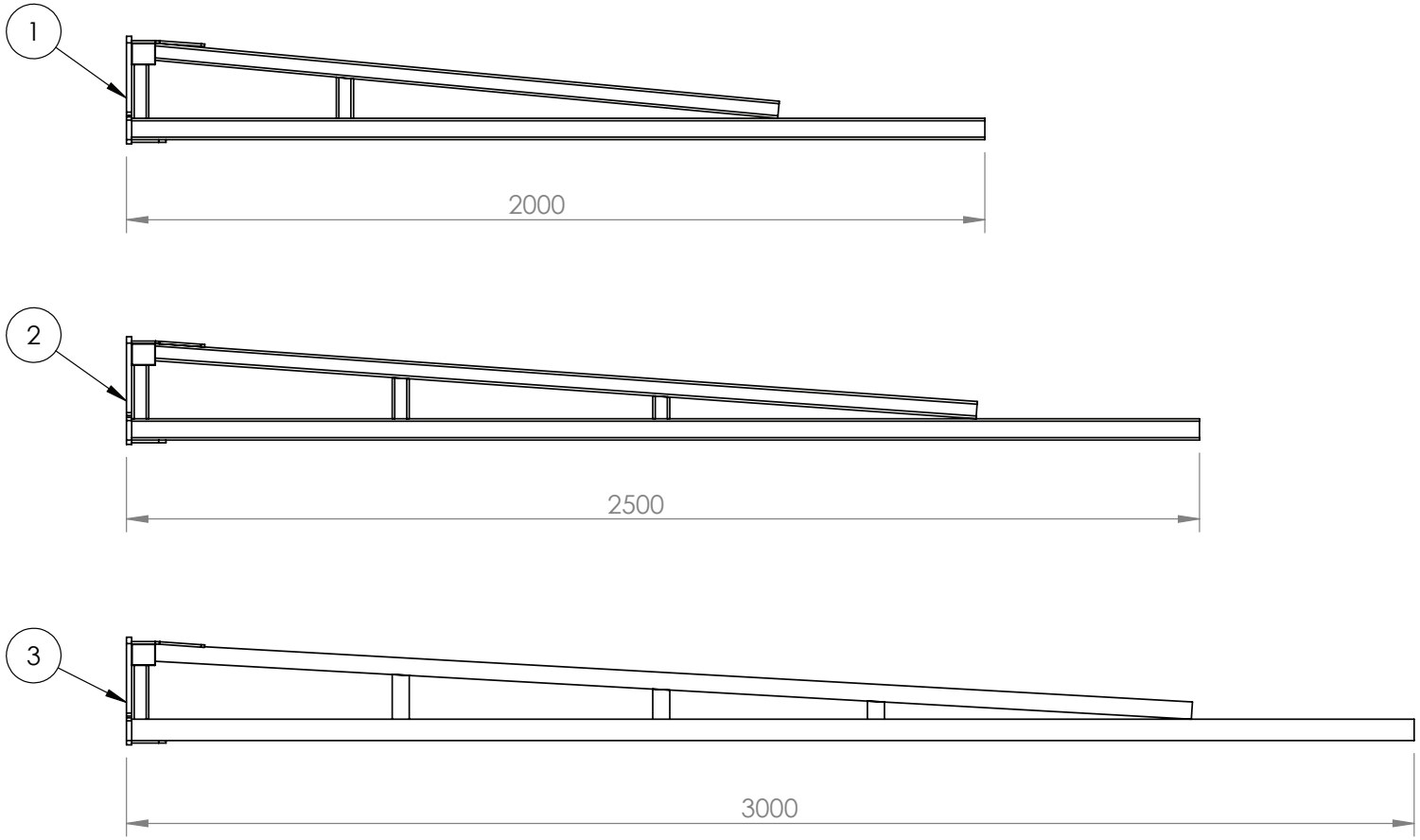

IF DESCRIPTION PREFIX IS ASSEMBLY DRAWING ONLY OR PRODUCTION DRAWING ONLY THE ITEM IS NOT FOR SALE			
ITEM	PART NUMBER	DESCRIPTION	QTY
1	GA4656123	ALUM BREAKAWAY 2M, SUIT 3D BREAKAWAY 2.0	2
2	GA4656124	BOOM BREAKAWAY END IN ALUMINIUM 2.5M	2
3	GA4656127	BOOM BREAKAWAY TIP 3M 3D 2.0	2
GA7800164 GOLDACRES		PARTS MANUAL ONLY. BOOM BREAKAWAY COMPONENTS. TRITECH S2 G4 MY24	REV 00

Boom Wing, 24-30mt, LH Inner, Boom Slide Protectors

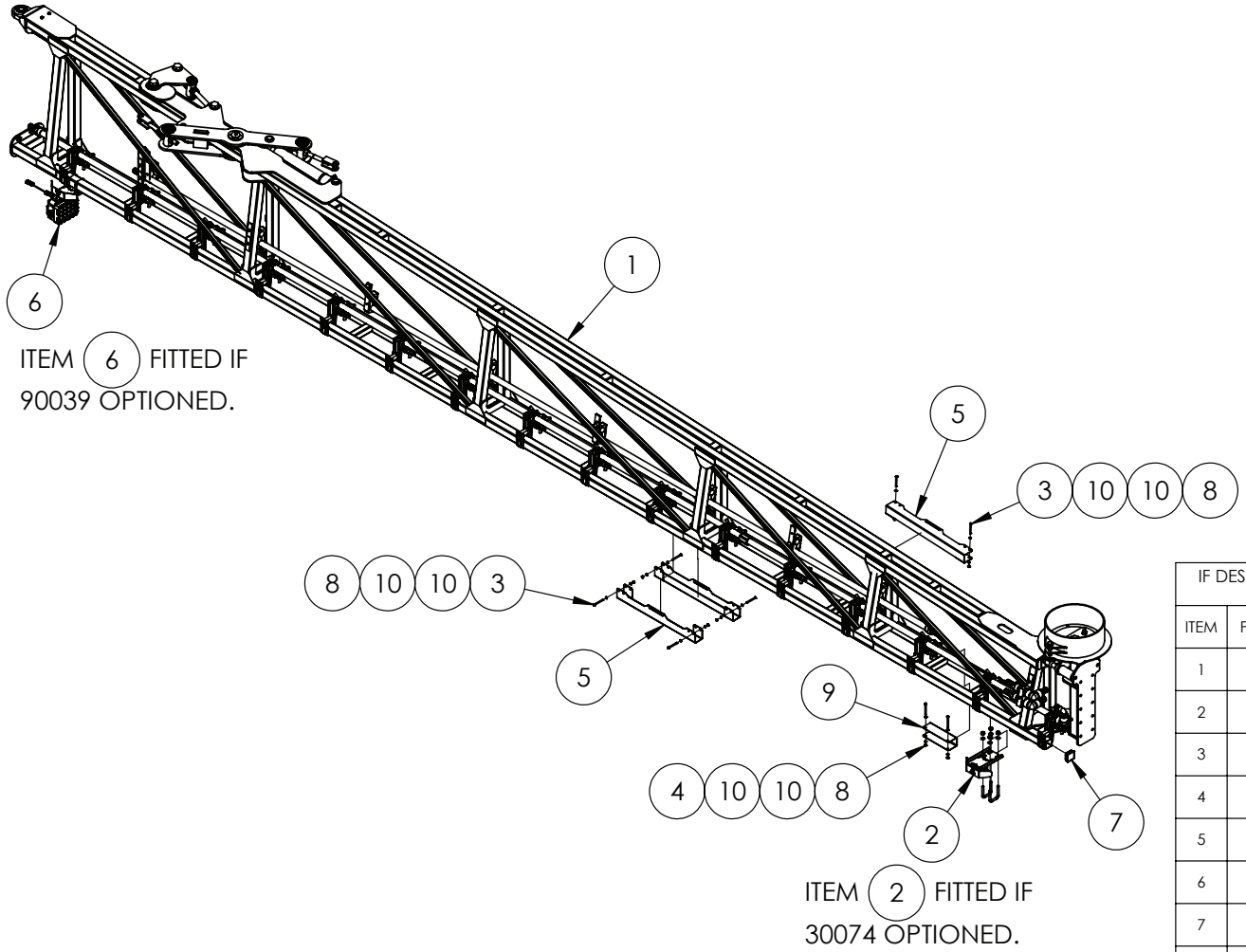

IF DESCRIPTION PREFIX IS ASSEMBLY DRAWING ONLY OR PRODUCTION DRAWING ONLY THE ITEM IS NOT FOR SALE			
ITEM	PART NUMBER	DESCRIPTION	QTY
1	GA4951660	ASSEMBLY DRAWING ONLY, BOOM INNER ASSEMBLY, 24-36M, LH, S2 G4, MY24	1
2	GA4952700	ASSEMBLY DRAWING ONLY, BRACKET, SENSOR, RAVEN XRT, SUITS TRITECH MY23	1
3	GA0500067	BHCS M6 X 65 GR12.9 ZP	6
4	GA5004107	BOLT M6 X 70 GR8.8 ZP	2
5	GA4505005	BOOM SLIDE PROTECTOR SS 2013	3
6	GA4912810	BOOM LIGHT ASSEMBLY, BLUE, SUIT 50mm BOOM MOUNT	1
7	GA5003783	END CAP, PLASTIC, BLACK, INSERT, RHS. 50 X 50, 0.8 - 2.5mm WALL	1
8	GA5048115	NUT M6 NYLOC ZP	8
9	F70294A	PROTECTOR, BOOM CORD, SUIT 50 X 50, 200mm, SS	1
10	GA5004437	WASHER 6mm FLAT SS	16
GA4951610-01 GOLDACRES		ASSEMBLY DRAWING ONLY. BOOM WING ASSEMBLY, 24M LH, TRITECH, S2 G4, MY24	REV 00

Boom Wing, 24-30mt, RH Inner, Boom Slide Protectors

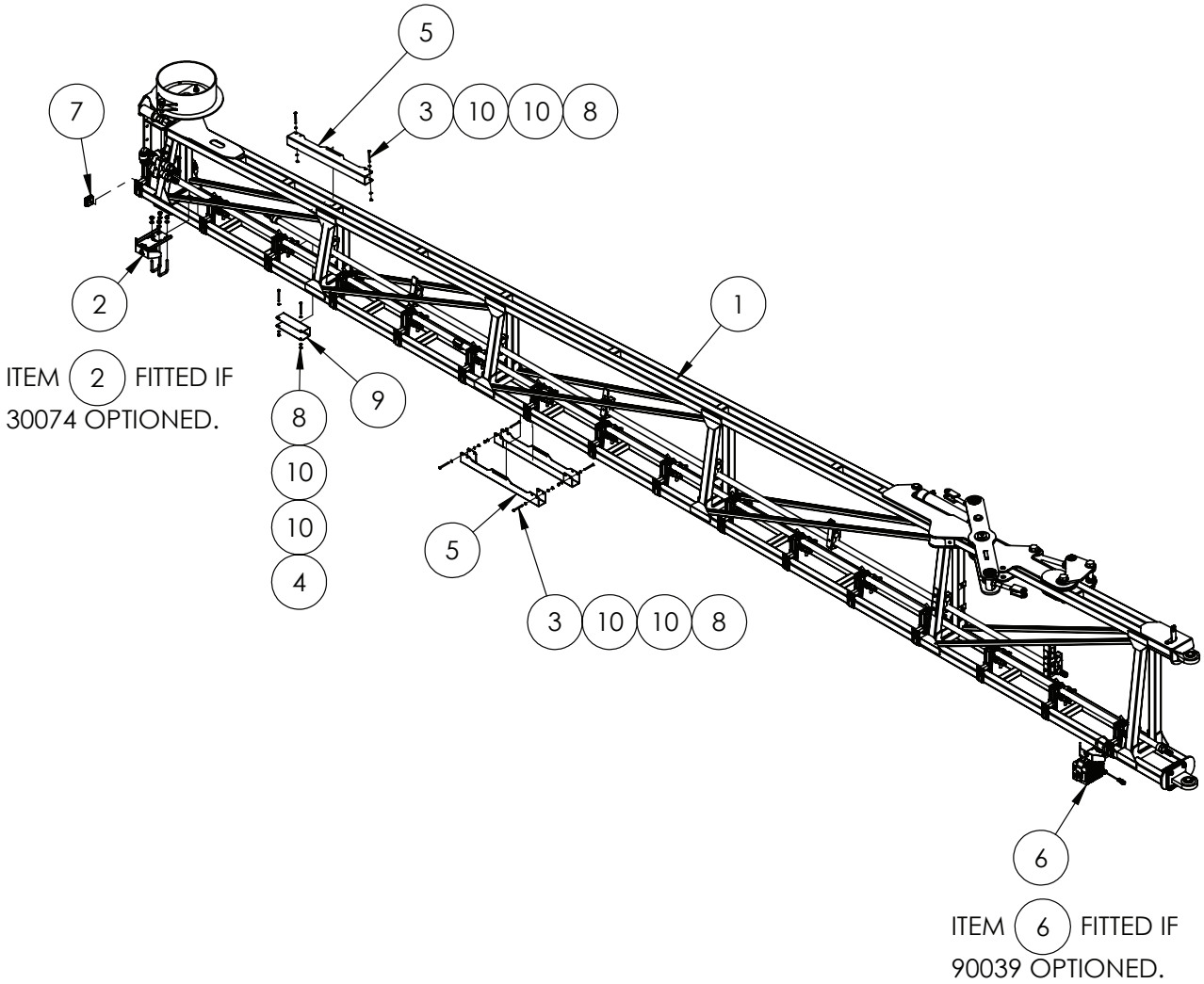

IF DESCRIPTION PREFIX IS ASSEMBLY DRAWING ONLY OR PRODUCTION DRAWING ONLY THE ITEM IS NOT FOR SALE			
ITEM	PART NUMBER	DESCRIPTION	QTY
1	GA4951665	ASSEMBLY DRAWING ONLY, BOOM INNER ASSEMBLY, 24-36M, RH, S2 G4, MY24	1
2	GA4952700	ASSEMBLY DRAWING ONLY, BRACKET, SENSOR, RAVEN XRT, SUITS TRITECH MY23	1
3	GA0500067	BHCS M6 X 65 GR12.9 ZP	6
4	GA5004107	BOLT M6 X 70 GR8.8 ZP	2
5	GA4505005	BOOM SLIDE PROTECTOR SS 2013	3
6	GA4912810	BOOM LIGHT ASSEMBLY, BLUE, SUIT 50mm BOOM MOUNT	1
7	GA5003783	END CAP, PLASTIC, BLACK, INSERT, RHS. 50 X 50, 0.8 - 2.5mm WALL	1
8	GA5048115	NUT M6 NYLOC ZP	8
9	F70294A	PROTECTOR, BOOM CORD, SUIT 50 X 50, 200mm, SS	1
10	GA5004437	WASHER 6mm FLAT SS	16
GA4951615-01 GOLDACRES		ASSEMBLY DRAWING ONLY. BOOM WING ASSEMBLY, 24M RH, TRITECH, S2 G4, MY24	REV 00

Boom Wing, 36mt, LH Inner, Boom Slide Protectors

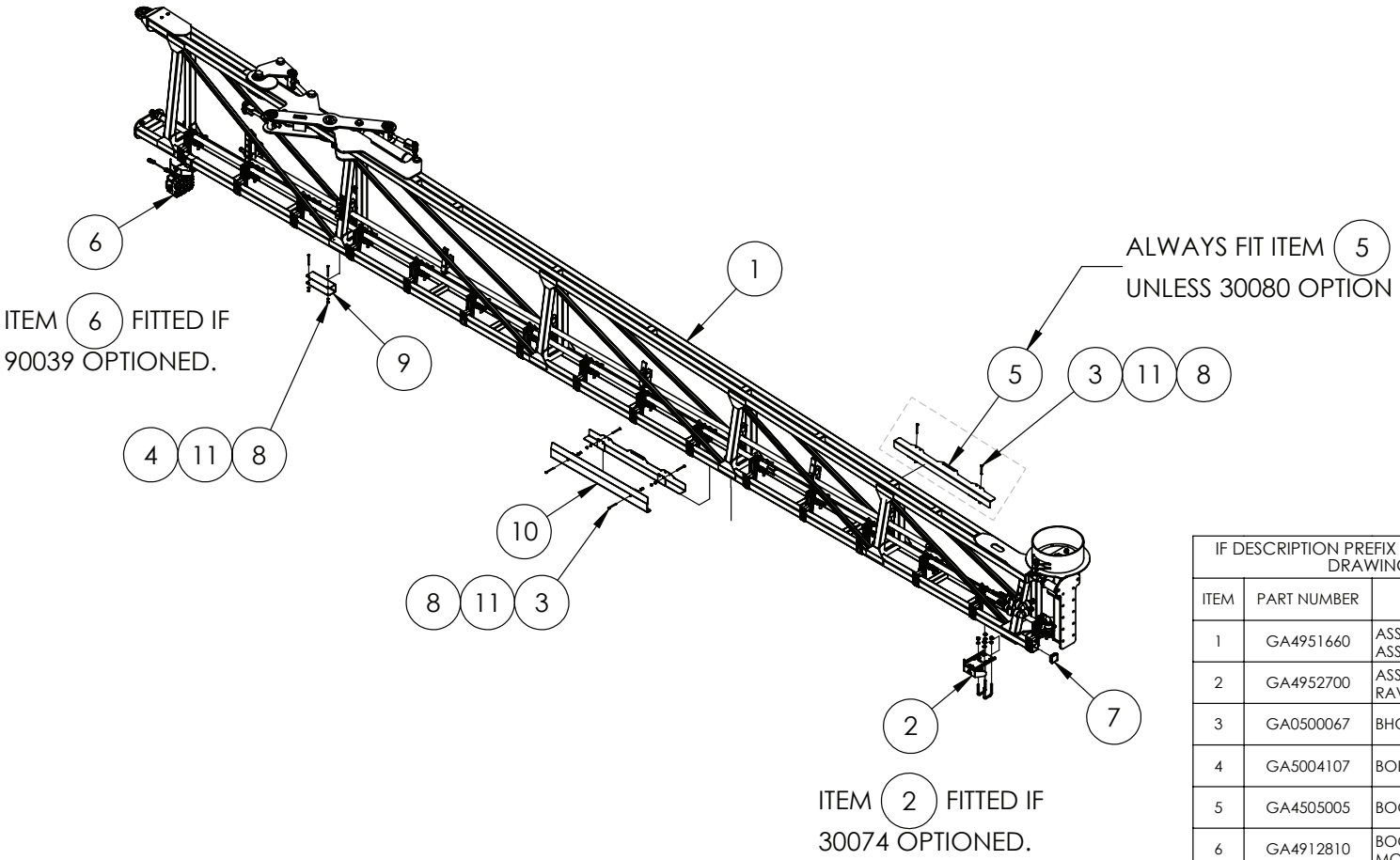

IF DESCRIPTION PREFIX IS ASSEMBLY DRAWING ONLY OR PRODUCTION DRAWING ONLY THE ITEM IS NOT FOR SALE			
ITEM	PART NUMBER	DESCRIPTION	QTY
1	GA4951660	ASSEMBLY DRAWING ONLY, BOOM INNER ASSEMBLY, 24-36M, LH, S2 G4, MY24	1
2	GA4952700	ASSEMBLY DRAWING ONLY, BRACKET, SENSOR, RAVEN XRT, SUITS TRITECH MY23	1
3	GA0500067	BHCS M6 X 65 GR12.9 ZP	6
4	GA5004107	BOLT M6 X 70 GR8.8 ZP	2
5	GA4505005	BOOM SLIDE PROTECTOR SS 2013	2
6	GA4912810	BOOM LIGHT ASSEMBLY, BLUE, SUIT 50mm BOOM MOUNT	1
7	GA5003783	END CAP, PLASTIC, BLACK, INSERT, RHS. 50 X 50, 0.8 - 2.5mm WALL	1
8	GA5048115	NUT M6 NYLOC ZP	8
9	F70294A	PROTECTOR, BOOM CORD, SUIT 50 X 50, 200mm, SS	1
10	GA4402215	PROTECTOR, BOOM CORD, SUIT 50 X 50, EXTENDED GUIDE, SS	1
11	GA5004437	WASHER 6mm FLAT SS	8
GA6101963-01 GOLDACRES		ASSEMBLY DRAWING ONLY. BOOM WING ASSEMBLY, 36M LH, TRITECH, S2 G4, MY24	REV 01

Boom Wing, 36mt, RH Inner, Boom Slide Protectors

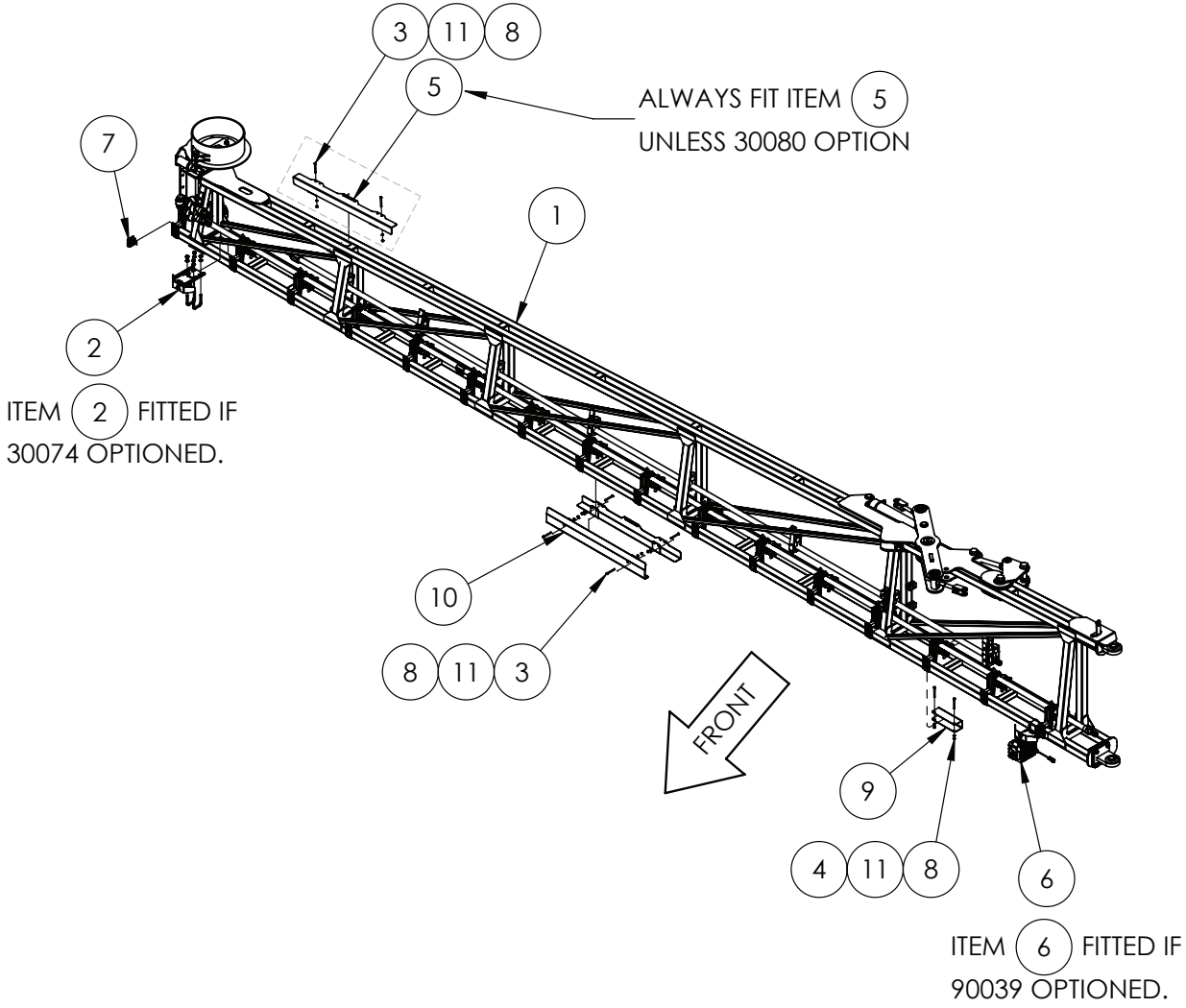

IF DESCRIPTION PREFIX IS ASSEMBLY DRAWING ONLY OR PRODUCTION DRAWING ONLY THE ITEM IS NOT FOR SALE			
ITEM	PART NUMBER	DESCRIPTION	QTY
1	GA4951665	ASSEMBLY DRAWING ONLY, BOOM INNER ASSEMBLY, 24-36M, RH, S2 G4, MY24	1
2	GA4952700	ASSEMBLY DRAWING ONLY, BRACKET, SENSOR, RAVEN XRT, SUITS TRITECH MY23	1
3	GA0500067	BHCS M6 X 65 GR12.9 ZP	6
4	GA5004107	BOLT M6 X 70 GR8.8 ZP	2
5	GA4505005	BOOM SLIDE PROTECTOR SS 2013	2
6	GA4912810	BOOM LIGHT ASSEMBLY, BLUE, SUIT 50mm BOOM MOUNT	1
7	GA5003783	END CAP, PLASTIC, BLACK, INSERT, RHS. 50 X 50, 0.8 - 2.5mm WALL	1
8	GA5048115	NUT M6 NYLOC ZP	8
9	F70294A	PROTECTOR, BOOM CORD, SUIT 50 X 50, 200mm, SS	1
10	GA4402215	PROTECTOR, BOOM CORD, SUIT 50 X 50, EXTENDED GUIDE, SS	1
11	GA5004437	WASHER 6mm FLAT SS	8
GA6101964-01 GOLDACRES		ASSEMBLY DRAWING ONLY. BOOM WING ASSEMBLY, 36M RH, TRITECH, S2 G4, MY24	REV 01

Boom Light, Boom Mounting Bracket Assembly

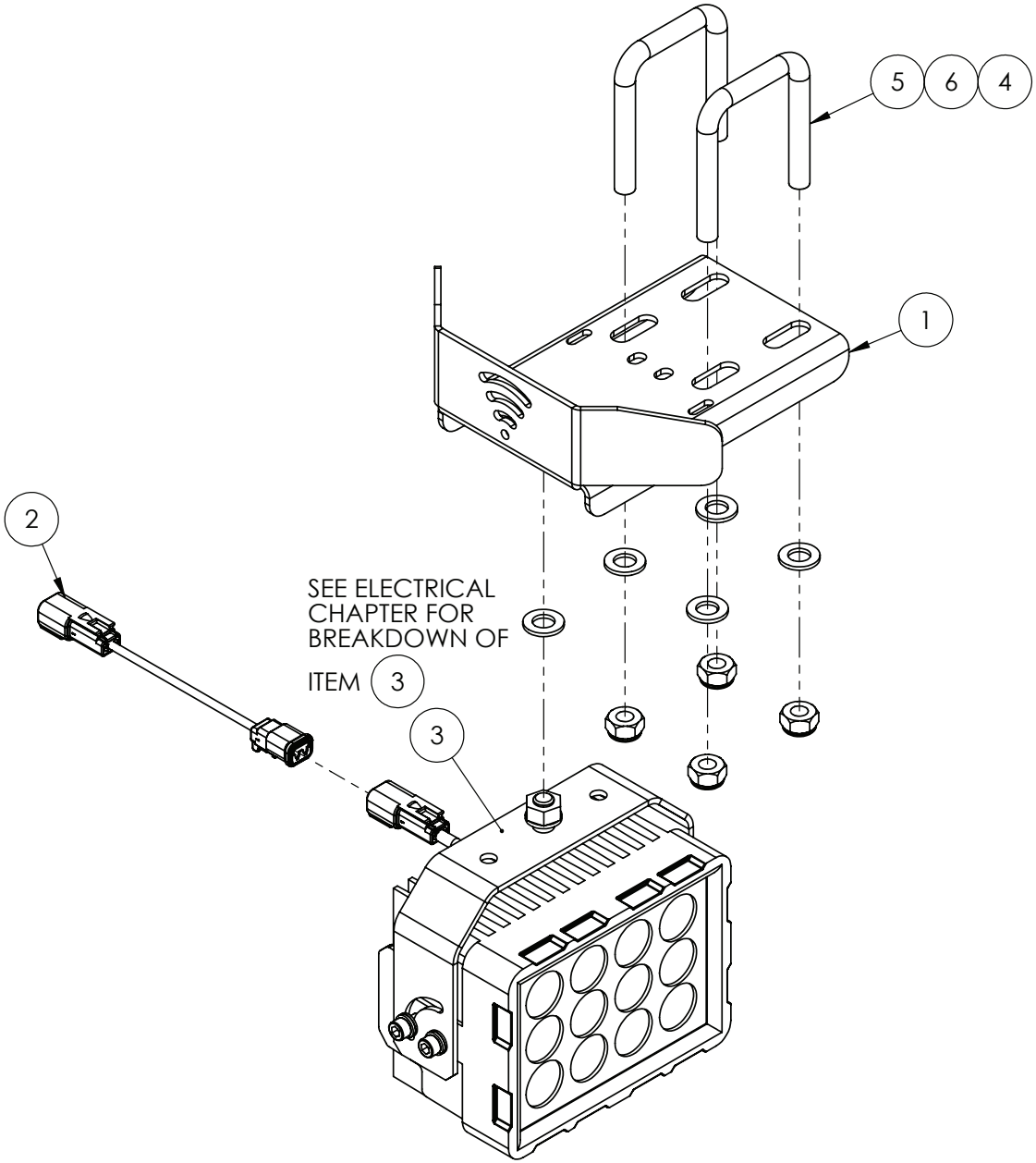

IF DESCRIPTION PREFIX IS ASSEMBLY DRAWING ONLY OR PRODUCTION DRAWING ONLY THE ITEM IS NOT FOR SALE			
ITEM	PART NUMBER	DESCRIPTION	QTY
1	GA4411280	BRACKET, RAVEN XRT RADAR SENSOR / LIGHT MOUNT, BOOM, WITH FRONT SHIELD	1
2	GA3000574	ELECTRICAL HARNESS, RCM NOZZLE EXTENSION, 1000mm	1
3	GA3000333	LIGHT, LED, BLUE, SPOT BEAM, 60 WATT, GLASS FRONT	1
4	GA5000141	NUT M10 NYLOC ZP	4
5	GA5053645	U BOLT SQUARE TOP M10 X 52 X 75	2
6	GA5000117	WASHER 10mm FLAT SS HD	5
GA4912810 GOLDACRES		BOOM LIGHT ASSEMBLY, BLUE, SUIT 50mm BOOM MOUNT	REV 00

Raven XRT, Boom Mounting Bracket Assembly

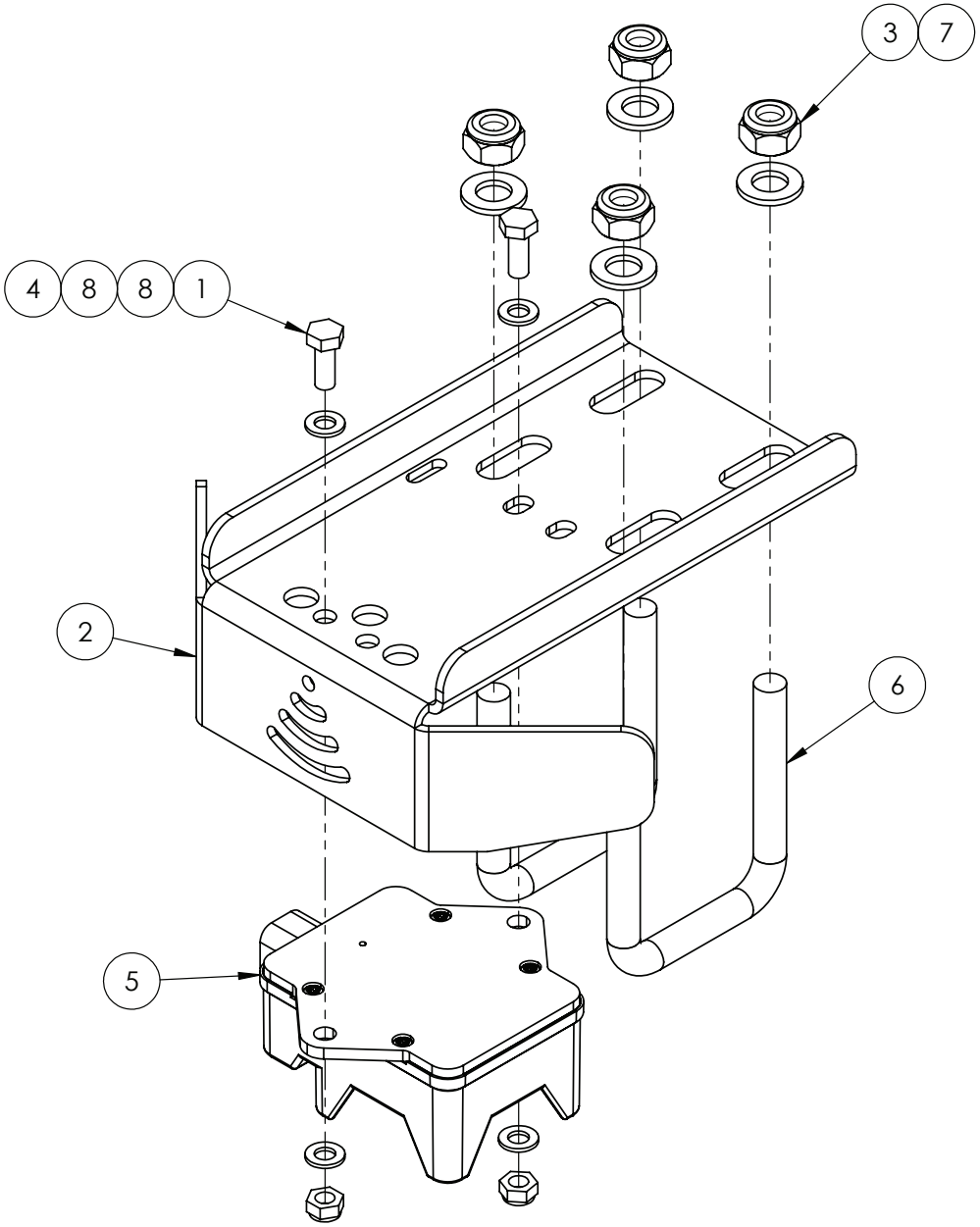

IF DESCRIPTION PREFIX IS ASSEMBLY DRAWING ONLY OR PRODUCTION DRAWING ONLY THE ITEM IS NOT FOR SALE			
ITEM	PART NUMBER	DESCRIPTION	QTY
1	GA5011395	BOLT M6 X 16 SS A2-70	2
2	GA4411280	BRACKET, RAVEN XRT RADAR SENSOR / LIGHT MOUNT, BOOM, WITH FRONT SHIELD	1
3	GA5051445	NUT M10 NYLOC SS	4
4	GA5004429	NUT M6 NYLOC SS	2
5	GA3000382	SENSOR, RAVEN XRT BOOM HEIGHT RADAR, 063-0173-962	1
6	GA5053645	U BOLT SQUARE TOP M10 X 52 X 75	2
7	GA5000117	WASHER 10mm FLAT SS HD	4
8	GA5004437	WASHER 6mm FLAT SS	4
GA4952700 GOLDACRES		ASSEMBLY DRAWING ONLY, BRACKET, SENSOR, RAVEN XRT, SUITS TRITECH MY23	REV 01

Boom Wing, Inner, LH, 24-36mt, Rose End & Shims

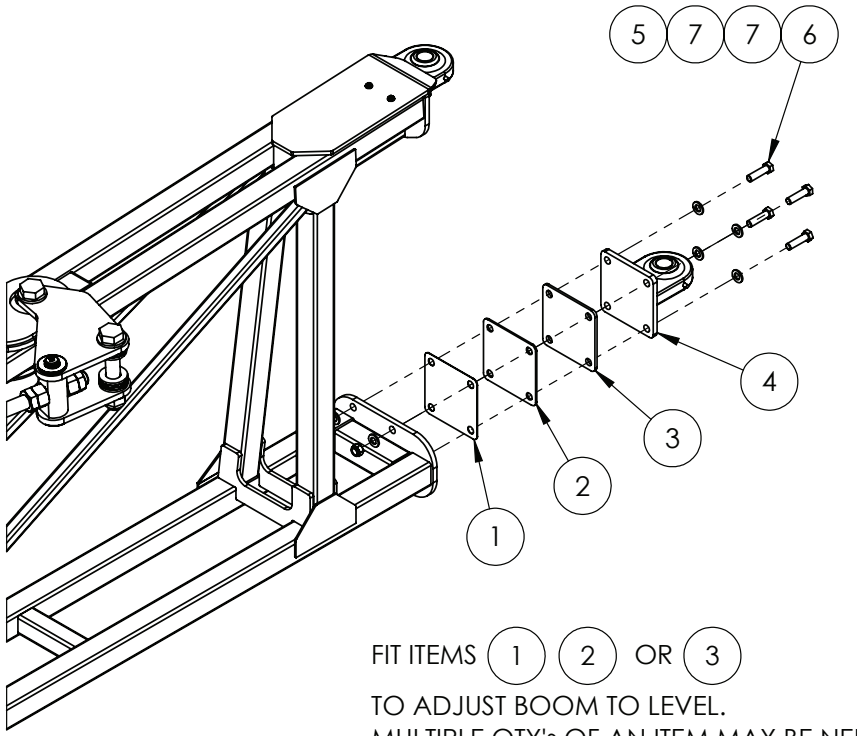

FIT ITEMS 1 2 OR 3

TO ADJUST BOOM TO LEVEL.
MULTIPLE QTY's OF AN ITEM MAY BE NEEDED

IF DESCRIPTION PREFIX IS ASSEMBLY DRAWING ONLY OR PRODUCTION DRAWING ONLY THE ITEM IS NOT FOR SALE			
ITEM	PART NUMBER	DESCRIPTION	QTY
1	GA4535285	DELTA BOOM LOWER ROSE END SHIM	1
2	GA4535355	DELTA BOOM LOWER ROSE END SHIM	1
3	GA4535360	DELTA BOOM LOWER ROSE END SHIM (5mm)	1
4	GA4656201	LOWER ROSE END MOUNTING ASSEMBLY LH	1
5	GA5012461	NUT M12 NYLOC ZP	4
6	GA5000327	SET SCREW M12 X 45 GR8.8 ZP	4
7	GA5000577	WASHER 12mm FLAT SS HD	8
GA4951660 GOLDACRES		ASSEMBLY DRAWING ONLY, BOOM INNER ASSEMBLY, 24-36M, LH, S2 G4, MY24	REV 01

Boom Wing, 24-36mt, Fold Adjustment Assembly, LH

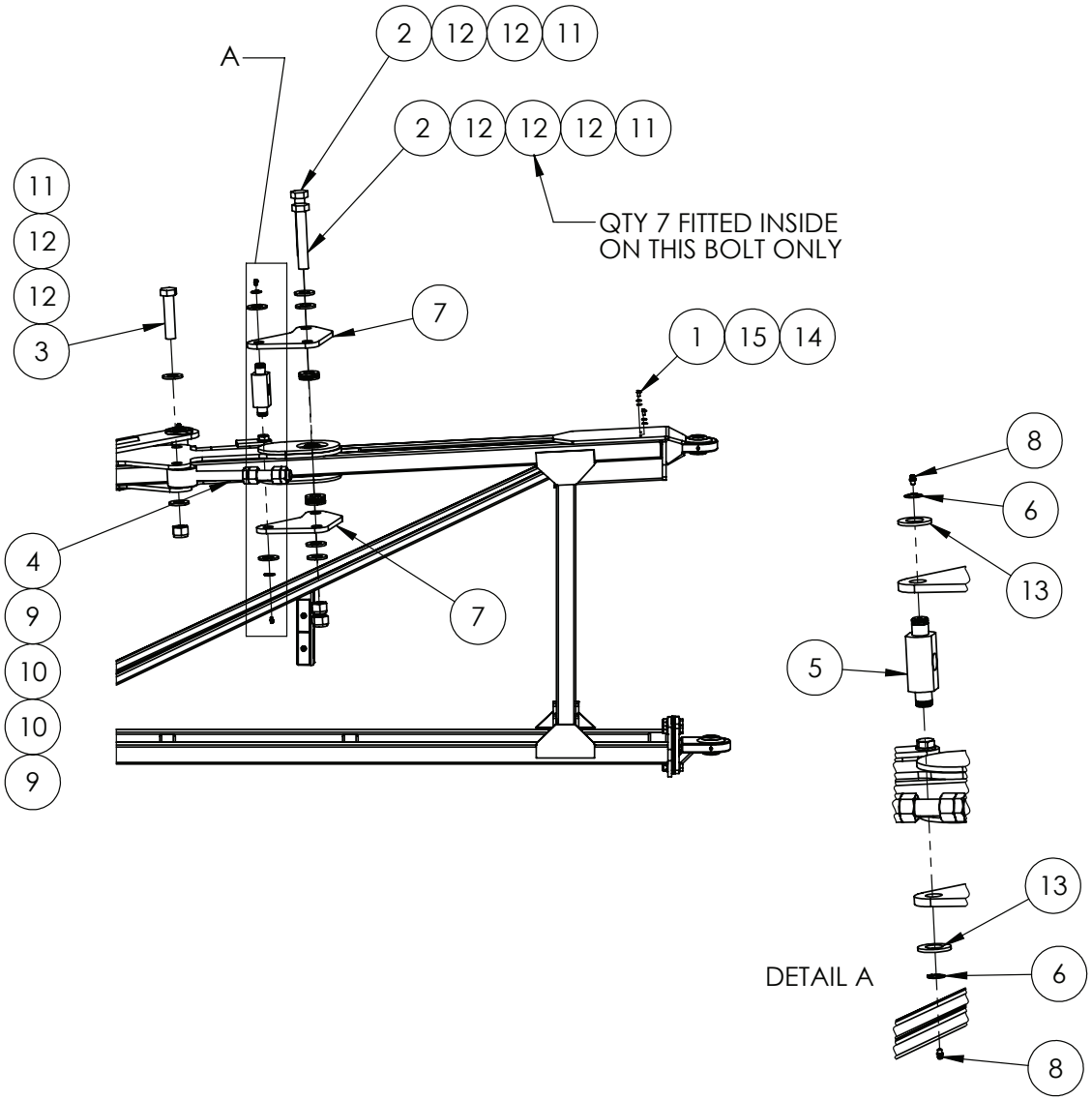

IF DESCRIPTION PREFIX IS ASSEMBLY DRAWING ONLY OR PRODUCTION DRAWING ONLY THE ITEM IS NOT FOR SALE			
ITEM	PART NUMBER	DESCRIPTION	QTY
1	GA5004023	BHCS M6 X 10 SS A2-70	2
2	GA5006043	BOLT 1 UNF 14 TPI X 6 GR8 ZP	2
3	GA5006039	BOLT, 1" UNF, 14 TPI X 4 1/2", GR8 ZP	1
4	GA5070775	BOOM FOLD ADJUSTER EYELET BOLT, HD	1
5	24MK4DB006	BUSH / PIN, FOLD RAM ADJUSTER NUT AND BOLT RETAINER	1
6	GA5008519	CIRCLIP, EXTERNAL, 25mm	2
7	GA4506970	FOLD ADJUSTER PLATE REAR 42m DUAL FOLD CYLINDER	2
8	GA5012203	GREASE NIPPLE, SHORT, 1/4 UNF, MACH0207	2
9	GA0500048	LOCK NUT, 1" UNF 12 TPI, ZP	2
10	GA5010991	NUT 1" HEX UNF 12 TPI ZP	2
11	GA5012445	NUT 1" UNF 14 TPI NYLOC ZP	3
12	GA5017659	WASHER 1 FLAT ZP HD (5mm THICK)	13
13	GA5017681	WASHER 1 X 2 7G FLAT THIN SS	2
14	GA5004437	WASHER 6mm FLAT SS	2
15	GA5004447	WASHER 6mm SPRING SS	2
GA4951660 GOLDACRES		ASSEMBLY DRAWING ONLY, BOOM INNER ASSEMBLY, 24-36M, LH, S2 G4, MY24	REV 01

Boom Wing, 24-36mt, Bi-fold Assembly, LH

IF BI-FOLD 30080 OPTIONED
ALL ITEMS BELOW FITTED.

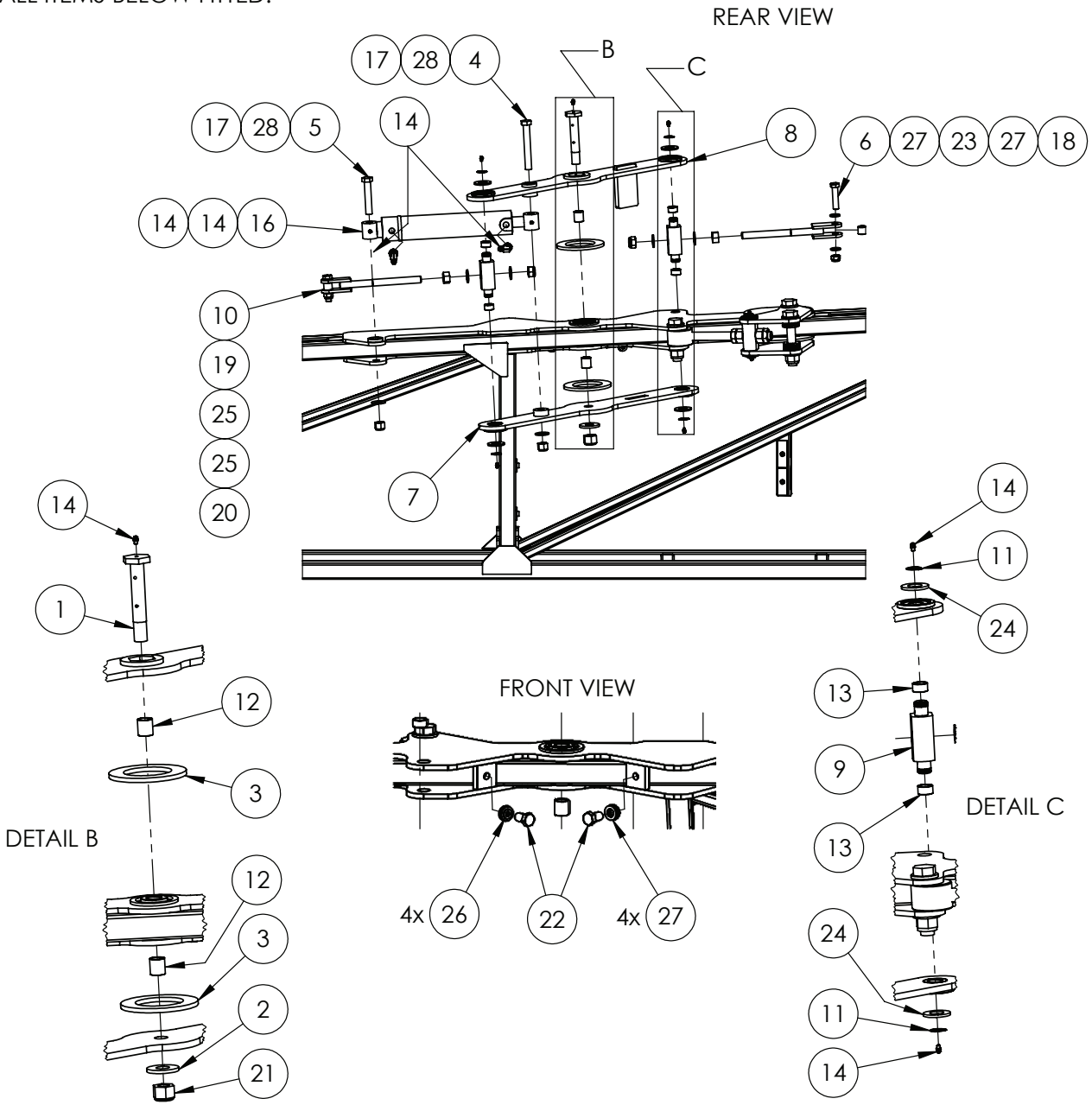

IF DESCRIPTION PREFIX IS ASSEMBLY DRAWING ONLY OR PRODUCTION DRAWING ONLY THE ITEM IS NOT FOR SALE			
ITEM	PART NUMBER	DESCRIPTION	QTY
1	2SF-007MACH	2ND STAGE FOLD - PIVOT PIN	1
2	2SF-003LAS	2ND STAGE FOLD - PIVOT WASHER	1
3	MACH0102	2ND STAGE PIVOT NYLON WASHER BLACK POLY	2
4	GA5070335	BOLT 3/4 UNC X 5 1/2 GR8 ZP	1
5	GA5049490	BOLT 3/4" UNC X 4" HT ZP	1
6	GA5000949	BOLT M16 X 70 GR8.8 ZP	2
7	GA4659730	BOOM BI-FOLD BOTTOM BRACKET 42M	1
8	GA4659725	BOOM BI-FOLD TOP BRACKET 42M	1
9	24MK4DB006	BUSH / PIN, FOLD RAM ADJUSTER NUT AND BOLT RETAINER	2
10	GA5020320	CABLE ADJUSTER 20mm THREADED	2
11	GA5008519	CIRCLIP, EXTERNAL, 25mm	4
12	GA5009467	GLACIER BUSH 25ID X 30 LONG	2
13	GA5009463	GLACIER BUSH 25mm ID X 15 LONG	4
14	GA5012203	GREASE NIPPLE, SHORT, 1/4 UNF, MACH0207	7
15	GA3500700	HYDRAULIC ADAPTOR, ELBOW, 90 DEGREE, 9/16" JIC MALE X 3/4" UN MALE O-RING, S91-0912	2
16	GA5070845	HYPOWER RAM SUIT 42M BI FOLD 293mm STROKE, 2 1/2" BORE, 1 1/4" ROD	1
17	GA5048430	NUT 3/4 UNC NYLOC ZP	2
18	GA5001029	NUT M16 NYLOC ZP	2
19	GA5001709	NUT M20 COARSE ZP	2
20	GA5048125	NUT M20 NYLOC ZP	2
21	GA5012469	NUT M24 NYLOC ZP	1
22	GA5000911	SET SCREW M16 X 30 GR8.8 ZP	2
23	GA4553280	SPACER, CABLE ADJSUTER, ID 17, OD 25	2
24	GA5017681	WASHER 1 X 2 7G FLAT THIN SS	4
25	GA5001741	WASHER 20mm FLAT SS HD	4
26	GA5000117	WASHER M10 FLAT SS HD	1
27	GA5001043	WASHER M16 FLAT SS HD	11
28	GA5001045	WASHER, 3/4" FLAT, HD ZP	2
GA4951660 GOLDACRES		ASSEMBLY DRAWING ONLY, BOOM INNER ASSEMBLY, 24-36M, LH, S2 G4, MY24	REV 01

Boom Wing, Outer, 24-36mt, Wear Plate & Shims, LH

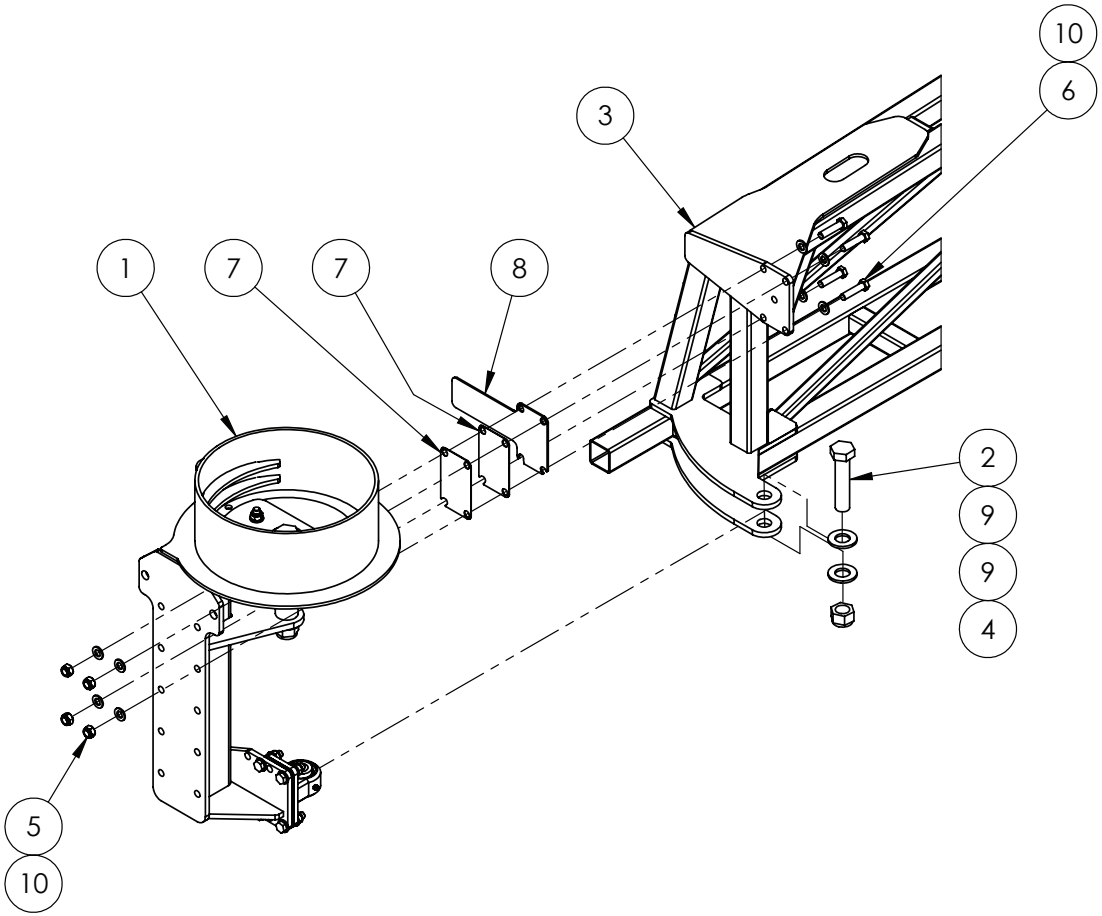

IF DESCRIPTION PREFIX IS ASSEMBLY DRAWING ONLY OR PRODUCTION DRAWING ONLY THE ITEM IS NOT FOR SALE			
ITEM	PART NUMBER	DESCRIPTION	QTY
1	GA4952340	ASSEMBLY DRAWING ONLY. CABLE DRUM, INNER BOOM, LH, TRITECH MY23	1
2	GA5006039	BOLT, 1" UNF, 14 TPI X 4 1/2", GR8 ZP	1
3	GA4656827	INNER WING 36m LH SUIT SP TRITECH MY17	1
4	GA5012445	NUT 1" UNF 14 TPI NYLOC ZP	1
5	GA5012461	NUT M12 NYLOC ZP	4
6	GA5011237	SET SCREW M12 X 50 GR8.8 ZP	4
7	DB-ADJ-16LAS	SHIM PLATE FOR REMOVABLE PIVOT ASSEMBLY	2
8	GA4524690	UPPER BOOM STOP WEAR PLATE MY13	1
10	GA5000577	WASHER 12mm FLAT SS HD	8
GA4951660 GOLDACRES		ASSEMBLY DRAWING ONLY, BOOM INNER ASSEMBLY, 24-36M, LH, S2 G4, MY24	REV 01

Boom Wing, Inner, RH, 24-36mt, Rose End & Shims

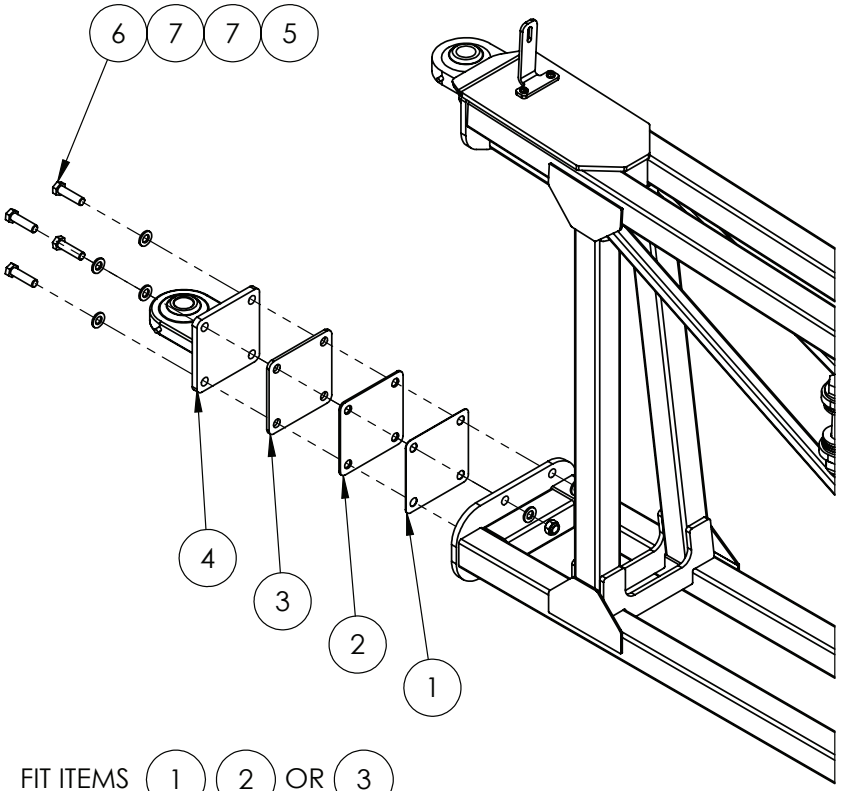

FIT ITEMS 1 2 OR 3
TO ADJUST BOOM TO LEVEL.
MULTIPLE QTY's OF AN ITEM MAY BE NEEDED.

IF DESCRIPTION PREFIX IS ASSEMBLY DRAWING ONLY OR PRODUCTION DRAWING ONLY THE ITEM IS NOT FOR SALE			
ITEM	PART NUMBER	DESCRIPTION	QTY
1	GA4535285	DELTA BOOM LOWER ROSE END SHIM	1
2	GA4535355	DELTA BOOM LOWER ROSE END SHIM	1
3	GA4535360	DELTA BOOM LOWER ROSE END SHIM (5mm)	1
4	GA4656200	LOWER ROSE END MOUNTING ASSEMBLY RH	1
5	GA5012461	NUT M12 NYLOC ZP	4
6	GA5000327	SET SCREW M12 X 45 GR8.8 ZP	4
7	GA5000577	WASHER 12mm FLAT SS HD	8
GA4951665 GOLDACRES		ASSEMBLY DRAWING ONLY. BOOM INNER ASSEMBLY, 24-36M, RH, S2 G4, MY24	REV 01

Boom Wing, 24-36mt, Fold Adjustment Assembly, RH

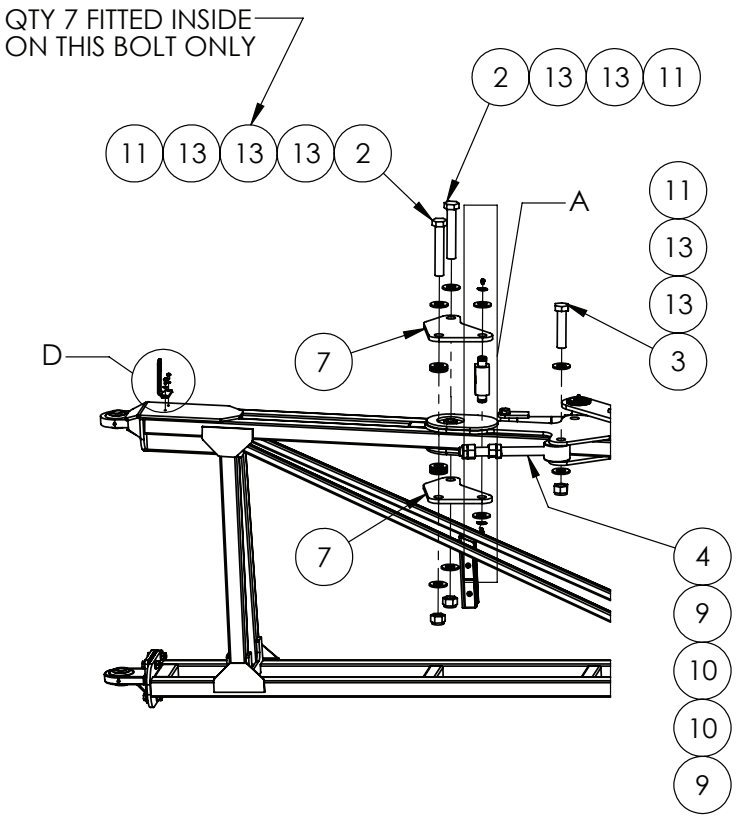

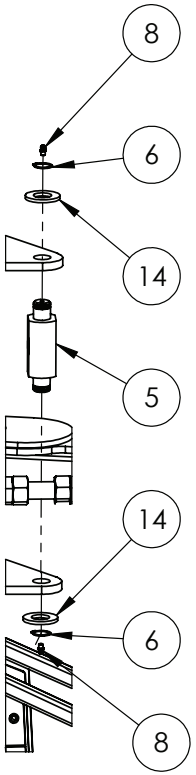

DETAIL A

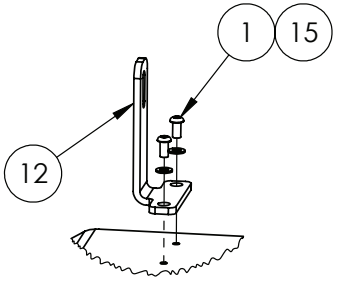

DETAIL D

IF DESCRIPTION PREFIX IS ASSEMBLY DRAWING ONLY OR PRODUCTION DRAWING ONLY THE ITEM IS NOT FOR SALE			
ITEM	PART NUMBER	DESCRIPTION	QTY
1	GA5004033	BHCS M6 X 12 SS A2-70	2
2	GA5006043	BOLT 1 UNF 14 TPI X 6 GR8 ZP	2
3	GA5006039	BOLT, 1" UNF, 14 TPI X 4 1/2", GR8 ZP	1
4	GA5070775	BOOM FOLD ADJUSTER EYELET BOLT, HD	1
5	24MK4DB006	BUSH / PIN, FOLD RAM ADJUSTER NUT AND BOLT RETAINER	1
6	GA5008519	CIRCLIP, EXTERNAL, 25mm	2
7	GA4506970	FOLD ADJUSTER PLATE REAR 42m DUAL FOLD CYLINDER	2
8	GA5012203	GREASE NIPPLE, SHORT, 1/4 UNF, MACH0207	2
9	GA0500048	LOCK NUT, 1" UNF 12 TPI, ZP	2
10	GA5010991	NUT 1" HEX UNF 12 TPI ZP	2
11	GA5012445	NUT 1" UNF 14 TPI NYLOC ZP	3
12	GA4537185	SENSOR BRACKET STAND OFF, BOLT ON, SUIT PARALIFT HEIGHT, BOOM FOLD	1
13	GA5017659	WASHER 1 FLAT ZP HD (5mm THICK)	13
14	GA5017681	WASHER 1 X 2 7G FLAT THIN SS	2
15	GA5004437	WASHER 6mm FLAT SS	2
GA4951665 GOLDACRES		ASSEMBLY DRAWING ONLY. BOOM INNER ASSEMBLY, 24-36M, RH, S2 G4, MY24	REV 01

Boom Wing, 24-36mt, Bi-fold Assembly, RH

BI-FOLD OPTION 30080
ALL ITEMS BELOW FITTED.

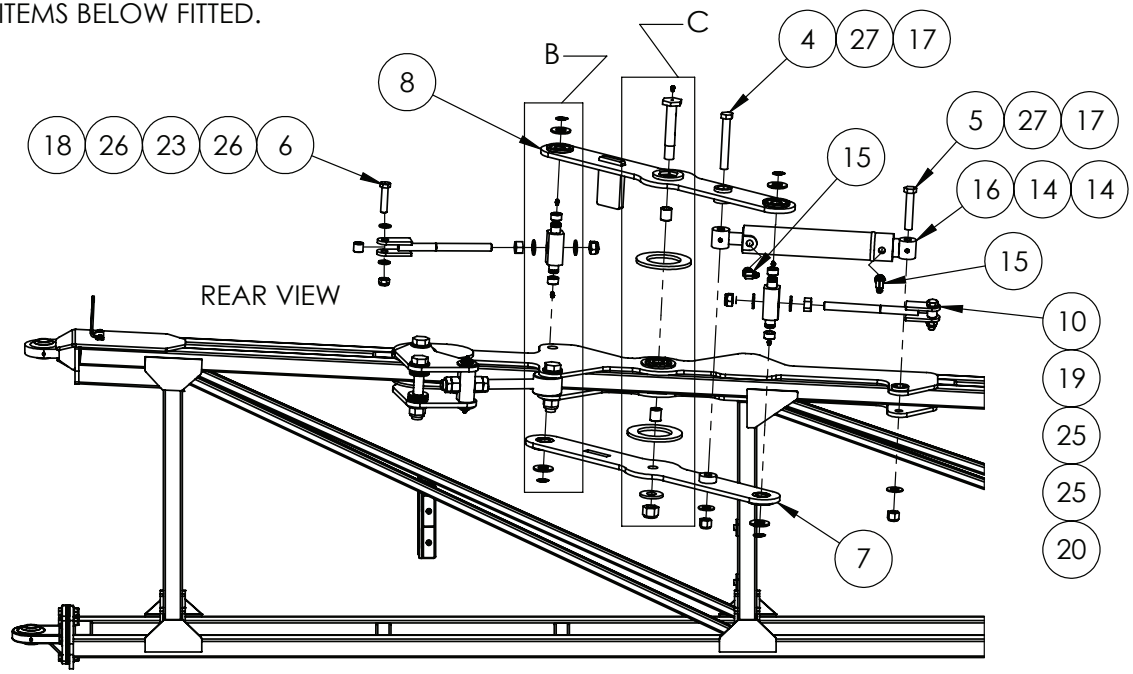

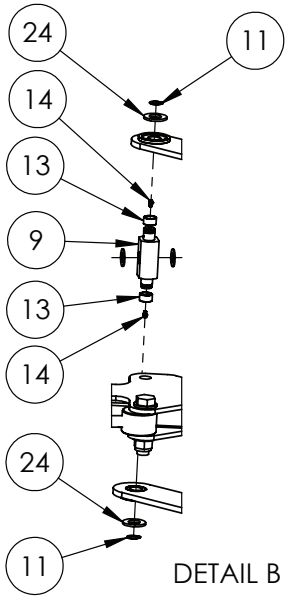

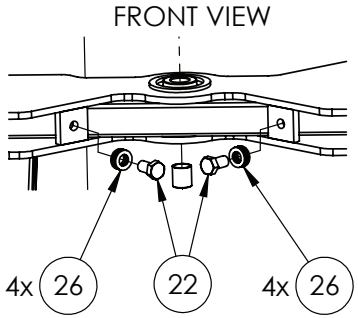

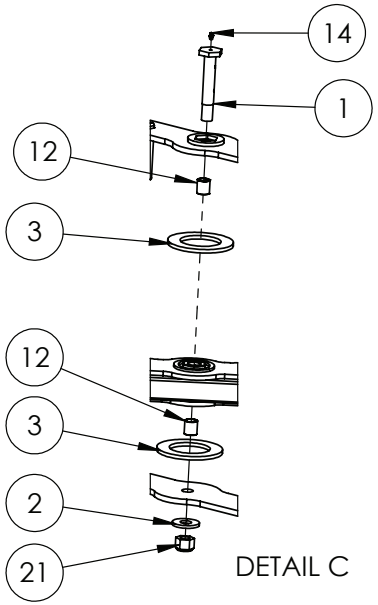

IF DESCRIPTION PREFIX IS ASSEMBLY DRAWING ONLY OR PRODUCTION DRAWING ONLY THE ITEM IS NOT FOR SALE			
ITEM	PART NUMBER	DESCRIPTION	QTY.
1	2SF-007MACH	2ND STAGE FOLD - PIVOT PIN	1
2	2SF-003LAS	2ND STAGE FOLD - PIVOT WASHER	1
3	MACH0102	2ND STAGE PIVOT NYLON WASHER BLACK POLY	2
4	GA5070335	BOLT 3/4 UNC X 5 1/2 GR8 ZP	1
5	GA5049490	BOLT 3/4" UNC X 4" HT ZP	1
6	GA5000949	BOLT M16 X 70 GR8.8 ZP	2
7	GA4659730	BOOM BI-FOLD BOTTOM BRACKET 42M	1
8	GA4659725	BOOM BI-FOLD TOP BRACKET 42M	1
9	24MK4DB006	BUSH / PIN, FOLD RAM ADJUSTER NUT AND BOLT RETAINER	1
10	GA5020320	CABLE ADJUSTER 20mm THREADED	2
11	GA5008519	CIRCLIP, EXTERNAL, 25mm	4
12	GA5009467	GLACIER BUSH 25ID X 30 LONG	2
13	GA5009463	GLACIER BUSH 25mm ID X 15 LONG	4
14	GA5012203	GREASE NIPPLE, SHORT, 1/4 UNF, MACH0207	7
15	GA3500700	HYDRAULIC ADAPTOR, ELBOW, 90 DEGREE, 9/16" JIC MALE X 3/4" UN MALE O-RING, S91-0912	2
16	GA5070845	HYPOWER RAM SUIT 42M BI FOLD 293mm STROKE, 2 1/2" BORE, 1 1/4" ROD	1
17	GA5048430	NUT 3/4 UNC NYLOC ZP	2
18	GA5001029	NUT M16 NYLOC ZP	2
19	GA5001709	NUT M20 COARSE ZP	2
20	GA5048125	NUT M20 NYLOC ZP	2
21	GA5012469	NUT M24 NYLOC ZP	1
22	GA5000911	SET SCREW M16 X 30 GR8.8 ZP	2
23	GA4553280	SPACER, CABLE ADJSUTER, ID 17, OD 25	2
24	GA5017681	WASHER 1 X 2 7G FLAT THIN SS	4
25	GA5001741	WASHER 20mm FLAT SS HD	4
26	GA5001043	WASHER M16 FLAT SS HD	12
27	GA5001045	WASHER, 3/4" FLAT, HD ZP	2
GA4951665 GOLDACRES		ASSEMBLY DRAWING ONLY. BOOM INNER ASSEMBLY, 24-36M, RH, S2 G4, MY24	REV 01

Boom Wing, Outer, 24-36mt, Wear Plate & Shims, RH

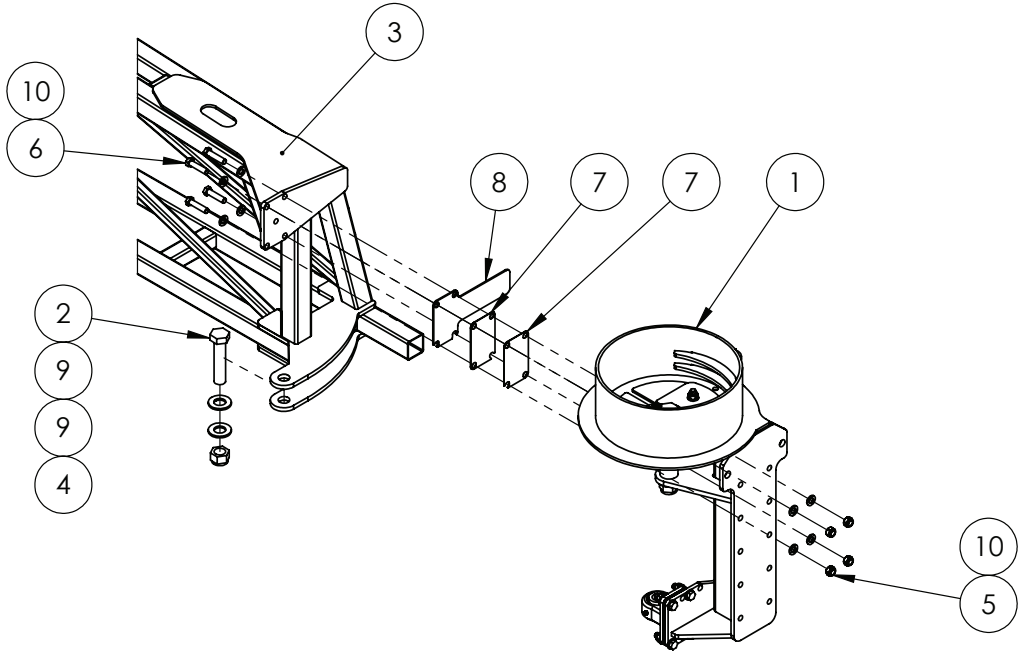

IF DESCRIPTION PREFIX IS ASSEMBLY DRAWING ONLY OR PRODUCTION DRAWING ONLY THE ITEM IS NOT FOR SALE			
ITEM	PART NUMBER	DESCRIPTION	QTY
1	GA4952345	ASSEMBLY DRAWING ONLY. CABLE DRUM, INNER BOOM, RH, TRITECH MY23	1
2	GA5006039	BOLT, 1" UNF, 14 TPI X 4 1/2", GR8 ZP	1
3	GA4656822	INNER WING 36m RH SUIT SP TRITECH MY17	1
4	GA5012445	NUT 1" UNF 14 TPI NYLOC ZP	1
5	GA5012461	NUT M12 NYLOC ZP	4
6	GA5011237	SET SCREW M12 X 50 GR8.8 ZP	4
7	DB-ADJ-16LAS	SHIM PLATE FOR REMOVABLE PIVOT ASSEMBLY	2
8	GA4524690	UPPER BOOM STOP WEAR PLATE MY13	1
9	GA5017681	WASHER 1 X 2 7G FLAT THIN SS	2
10	GA5000577	WASHER 12mm FLAT SS HD	8
GA4951665 GOLDACRES	ASSEMBLY DRAWING ONLY. BOOM INNER ASSEMBLY, 24-36M, RH, S2 G4, MY24		REV 01

Boom Wing, Inner, 24-30mt, Boom Line Clamps & Nozzle Bracket Assembly

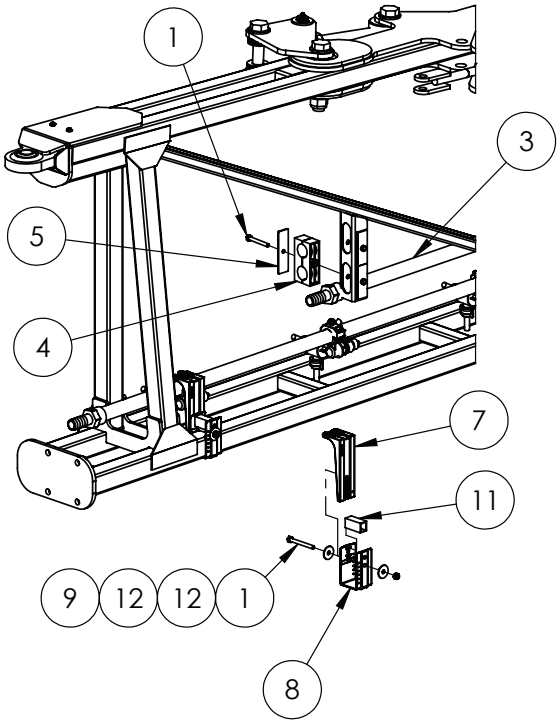

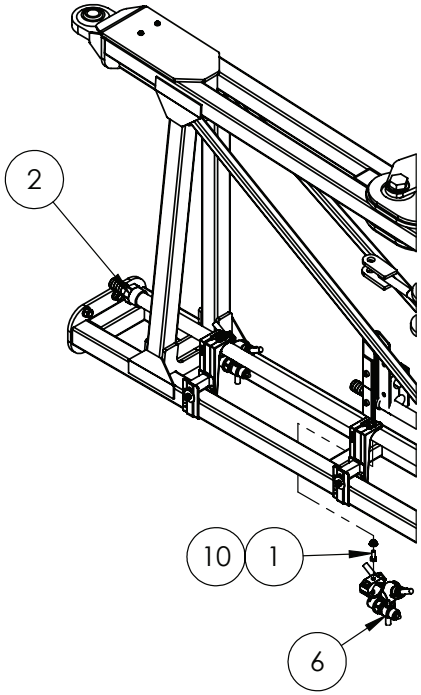

IF DESCRIPTION PREFIX IS ASSEMBLY DRAWING ONLY OR PRODUCTION DRAWING ONLY THE ITEM IS NOT FOR SALE			
ITEM	PART NUMBER	DESCRIPTION	QTY
1	GA5052710	BOLT M8 X 65 GR 8.8 ZP	41
2	GA4952750	BOOM POLY ASSEMBLY, BARE, 36M, LH INNER SECTION, DRILLED 500mm BROADACRE, LF SPECIAL, TRITECH MY23	1
3	GA4952585	BOOM POLY ASSEMBLY, 36M, INNER SECTION, BOOM RECIRCULATION, TRITECH MY23	1
4	GA5025535	JAW CLAMPS, PAIR, RCD-33.7	9
5	GA5078051	MOUNTING CLAMP, DOUBLE TYPE, PLATE, TOP, GROUP 5, RCD-5PT	9
6	GA5077970	NOZZLE BODY, TRIPLE, TRIJET, CLOCK FACE, 1", TEEJET	16
7	GA5018258	NOZZLE BRACKET, PLASTIC, L SHAPE, LONG	16
8	GA5018259	NOZZLE BRACKET, PLASTIC, U SHAPE	16
9	GA5052590	NUT M8 NYLOC SS	16
10	GA5070710	NUT WITH FLANGE, PLASTIC, M8 X 1.25	16
11	GA5066965	SPACER SUIT NOZZLE BRACKETS	16
12	GA5003645	WASHER FLAT SS 5-16 X 1 1-4	32
GA4951610-01 GOLDACRES		ASSEMBLY DRAWING ONLY. BOOM WING ASSEMBLY, 24M LH, TRITECH, S2 G4, MY24	REV 00

Boom Wing, Inner, 36mt, Boom Line Clamps & Nozzle Bracket Assembly

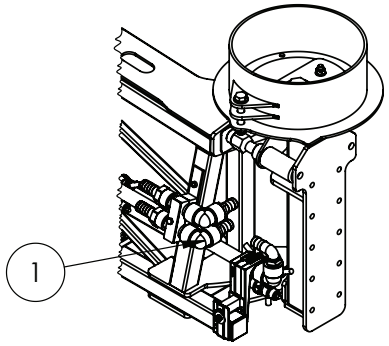

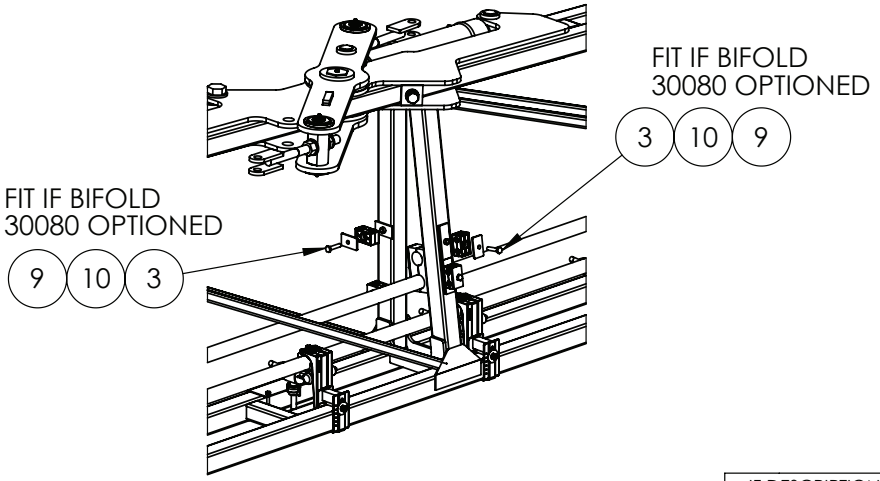

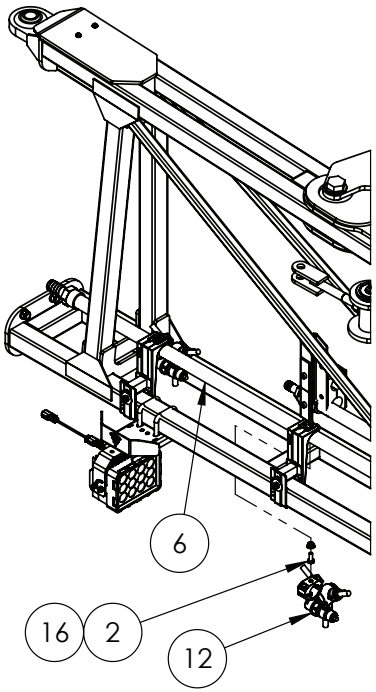

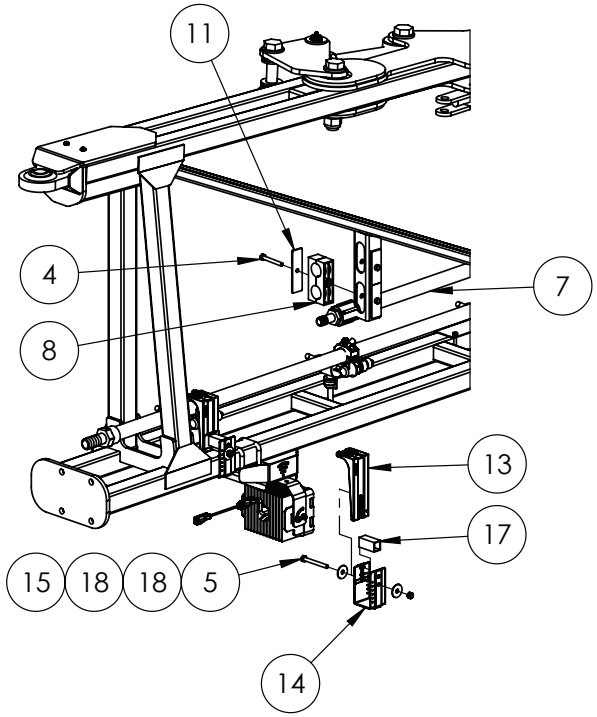

IF DESCRIPTION PREFIX IS ASSEMBLY DRAWING ONLY OR PRODUCTION DRAWING ONLY THE ITEM IS NOT FOR SALE			
ITEM	PART NUMBER	DESCRIPTION	QTY
1	GA4953420	ASSEMBLY DRAWING ONLY, BOOM WING, PLUMBING, ELBOW, TRITECH, MY23	2
2	GA5004085	BOLT M8 X 20 GR8.8 ZP	16
3	GA5011481	BOLT M8 X 35 GR8.8 ZP	4
4	GA5052710	BOLT M8 X 65 GR 8.8 ZP	9
5	GA5052600	BOLT M8 X 75 SS A2-70	16
6	GA4952750	BOOM POLY ASSEMBLY, BARE, 36M, LH INNER SECTION, DRILLED 500mm BROADACRE, LF SPECIAL, TRITECH MY23	1
7	GA4952585	BOOM POLY ASSEMBLY, 36M, INNER SECTION, BOOM RECIRCULATION, TRITECH MY23	1
8	GA5025535	JAW CLAMPS, PAIR, RCD-33.7	9
9	GA5078031	MOUNTING CLAMP, DOUBLE TYPE, JAW, PAIR, GROUP 2, 14mm, RCD-14J	4
10	GA5078042	MOUNTING CLAMP, DOUBLE TYPE, PLATE, TOP, GROUP 2, RCD-2PT	4
11	GA5078051	MOUNTING CLAMP, DOUBLE TYPE, PLATE, TOP, GROUP 5, RCD-5PT	9
12	GA5077970	NOZZLE BODY, TRIPLE, TRIJET, CLOCK FACE, 1", TEEJET	16
13	GA5018258	NOZZLE BRACKET, PLASTIC, L SHAPE, LONG	16
14	GA5018259	NOZZLE BRACKET, PLASTIC, U SHAPE	16
15	GA5052590	NUT M8 NYLOC SS	16
16	GA5070710	NUT WITH FLANGE, PLASTIC, M8 X 1.25	16
17	GA5066965	SPACER SUIT NOZZLE BRACKETS	16
18	GA5003645	WASHER FLAT SS 5-16 X 1 1-4	32
GA6101963-01 GOLDACRES		ASSEMBLY DRAWING ONLY. BOOM WING ASSEMBLY, 36M LH, TRITECH, S2 G4, MY24	REV 01

Boom Wing, Elbow Assemby, 36mt

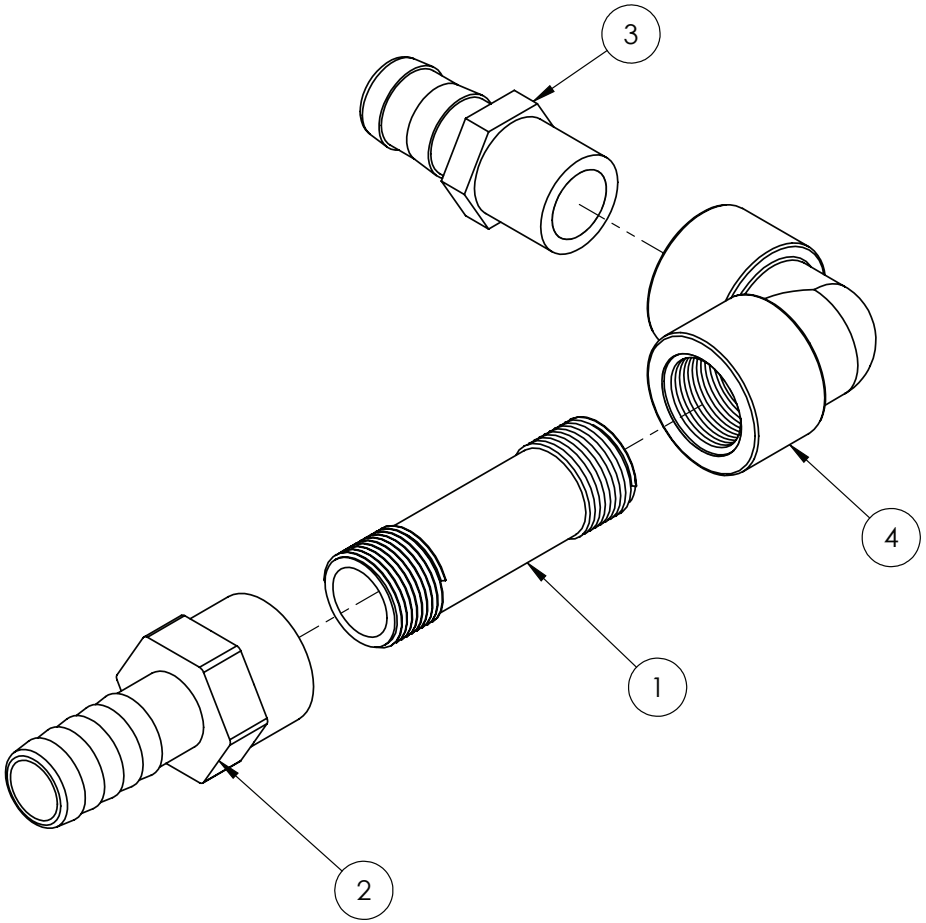

IF DESCRIPTION PREFIX IS ASSEMBLY DRAWING ONLY OR PRODUCTION DRAWING ONLY THE ITEM IS NOT FOR SALE			
ITEM	PART NUMBER	DESCRIPTION	QTY
1	GA2000572	BSP RISER 1" X 100	1
2	GA5077747	HOSE BARB, STRAIGHT, 1 FEMALE THREAD X 1 HOSE, BANJO	1
3	GA5077718	HOSE BARB, STRAIGHT, 1 MALE THREAD X 1 HOSE, BANJO	1
4	GA5077655	STREET ELBOW, 90 DEGREE, 1 FEMALE THREAD X 1 FEMALE THREAD, BANJO, EL100-90	1
GA4953420 GOLDACRES		ASSEMBLY DRAWING ONLY, BOOM WING, PLUMBING, ELBOW, TRITECH, MY23	REV 01

Boom Wing, 24mt, Outer, Boom Clamps & Nozzle Bracket Assembly

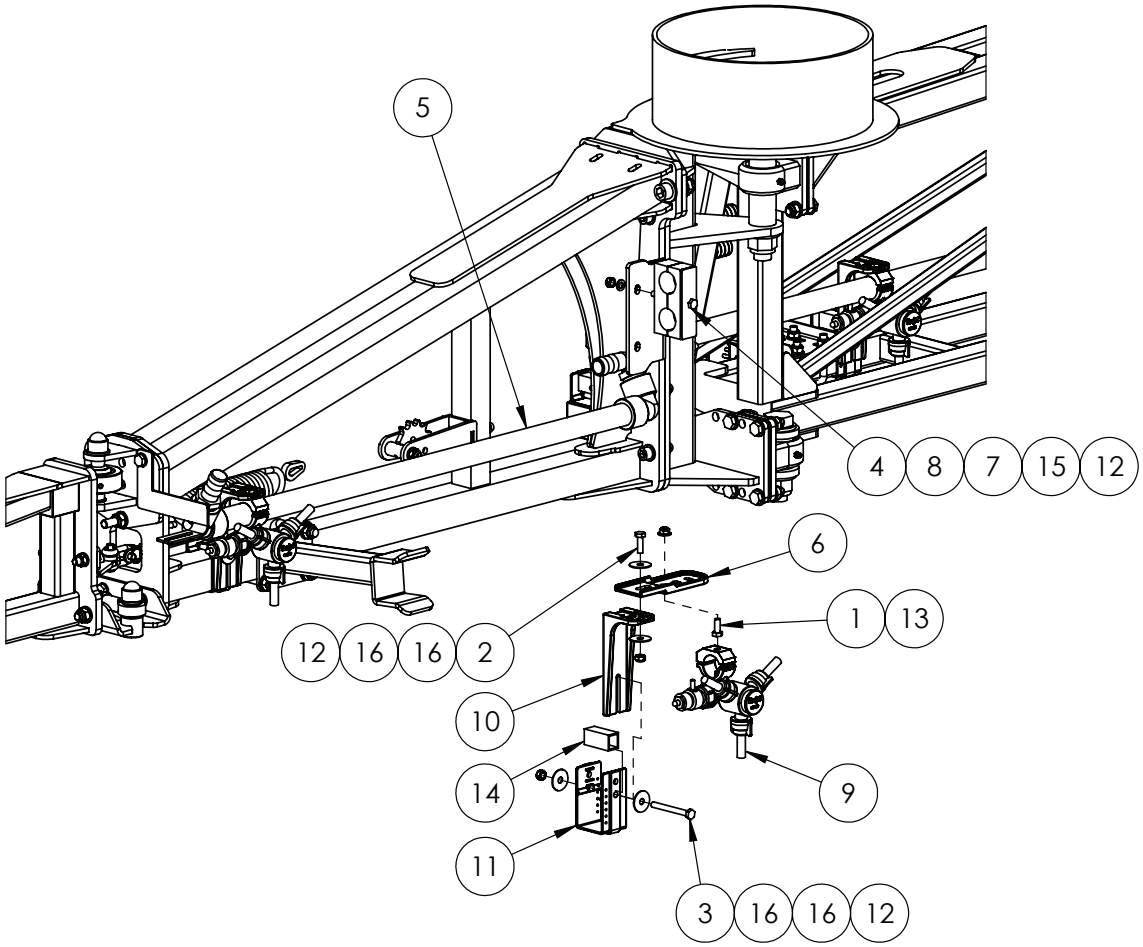

IF DESCRIPTION PREFIX IS ASSEMBLY DRAWING ONLY OR PRODUCTION DRAWING ONLY THE ITEM IS NOT FOR SALE			
ITEM	PART NUMBER	DESCRIPTION	QTY
1	GA5004085	BOLT M8 X 20 GR8.8 ZP	2
2	GA5004711	BOLT M8 X 25 GR8.8 ZP	1
3	GA5052600	BOLT M8 X 75 SS A2-70	2
4	GA5004749	BOLT M8 X 80 GR8.8 ZP	1
5	GA4952980	BOOM POLY ASSEMBLY, BARE, 24M, LH OUTER SECTION, DRILLED 500mm BROADACRE, TRITECH MY2	1
6	GA5018255	BRACKET, NOZZLE EXTENSION, PLASTIC	1
7	GA5025535	JAW CLAMPS, PAIR, RCD-33.7	1
8	GA5078051	MOUNTING CLAMP, DOUBLE TYPE, PLATE, TOP, GROUP 5, RCD-5PT	1
9	GA5077970	NOZZLE BODY, TRIPLE, TRIJET, CLOCK FACE, 1", TEEJET	2
10	GA5018258	NOZZLE BRACKET, PLASTIC, L SHAPE, LONG	2
11	GA5018259	NOZZLE BRACKET, PLASTIC, U SHAPE	2
12	GA5052590	NUT M8 NYLOC SS	4
13	GA5070710	NUT WITH FLANGE, PLASTIC, M8 X 1.25	2
14	GA5066965	SPACER SUIT NOZZLE BRACKETS	1
15	GA5003643	WASHER 8mm FLAT SS HD	1
16	GA5003645	WASHER FLAT SS 5-16 X 1 1-4	6
GA4951610-04 GOLDACRES		ASSEMBLY DRAWING ONLY. BOOM WING ASSEMBLY, 24M LH, TRITECH, S2 G4, MY24	REV 00

Boom Wing, 28-30mt, Outer, Boom Clamps & Nozzle Bracket Assembly

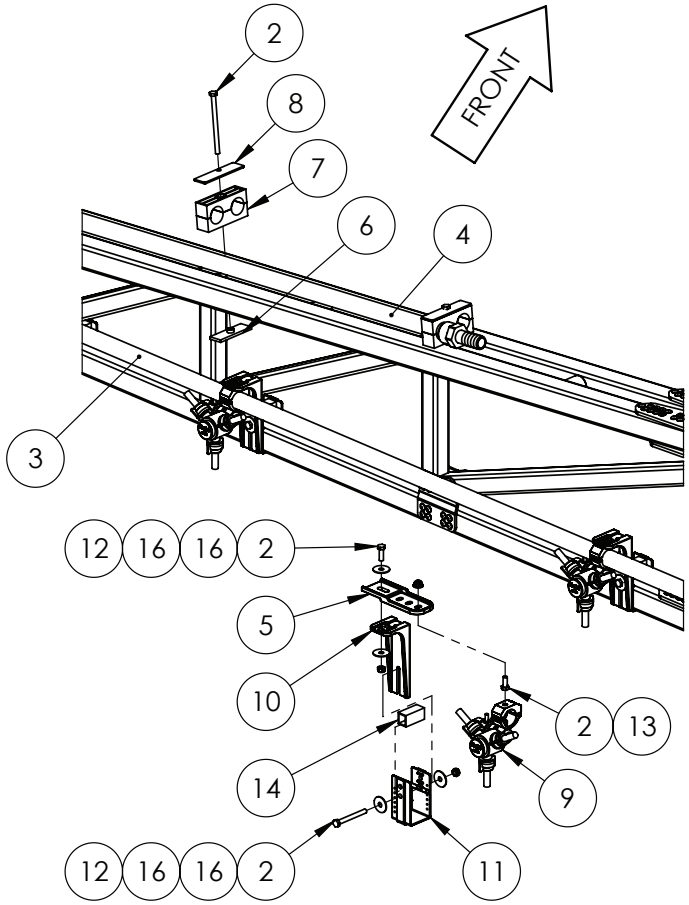

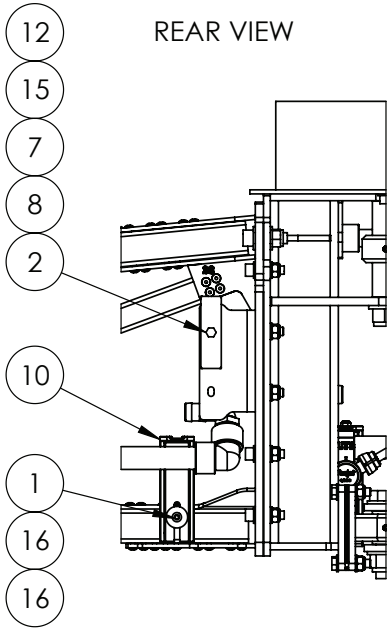

IF DESCRIPTION PREFIX IS ASSEMBLY DRAWING ONLY OR PRODUCTION DRAWING ONLY THE ITEM IS NOT FOR SALE			
ITEM	PART NUMBER	DESCRIPTION	QTY
1	GA5004696	BHCS M8 X 16 SS A2-70	1
2	GA5004749	BOLT M8 X 80 GR8.8 ZP	15
3	GA4953070	BOOM POLY ASSEMBLY, BARE, 28M, LH OUTER SECTION, DRILLED 500mm BROADACRE, TRITECH MY2	1
4	GA4953155	BOOM POLY ASSEMBLY, 28M, OUTER SECTION, BOOM RECIRCULATION, TRITECH MY24	1
5	GA5018255	BRACKET, NOZZLE EXTENSION, PLASTIC	1
6	GA5078048	DOUBLE CLAMP PLATE BOTTOM GR4	3
7	GA5025535	JAW CLAMPS, PAIR, RCD-33.7	4
8	GA5078051	MOUNTING CLAMP, DOUBLE TYPE, PLATE, TOP, GROUP 5, RCD-5PT	4
9	GA5077970	NOZZLE BODY, TRIPLE, TRIJET, CLOCK FACE, 1", TEEJET	5
10	GA5018258	NOZZLE BRACKET, PLASTIC, L SHAPE, LONG	6
11	GA5018259	NOZZLE BRACKET, PLASTIC, U SHAPE	5
12	GA5052590	NUT M8 NYLOC SS	7
13	GA5070710	NUT WITH FLANGE, PLASTIC, M8 X 1.25	5
14	GA5066965	SPACER SUIT NOZZLE BRACKETS	5
15	GA5003643	WASHER 8mm FLAT SS HD	1
16	GA5003645	WASHER FLAT SS 5-16 X 1 1-4	14
GA4951620-04 GOLDACRES	ASSEMBLY DRAWING ONLY. BOOM WING ASSEMBLY, 28M LH, TRITECH, S2 G4, MY24		REV 00.B

Boom Wing, Outer, 36mt, Boom Line Clamps & Nozzle Bracket Assembly

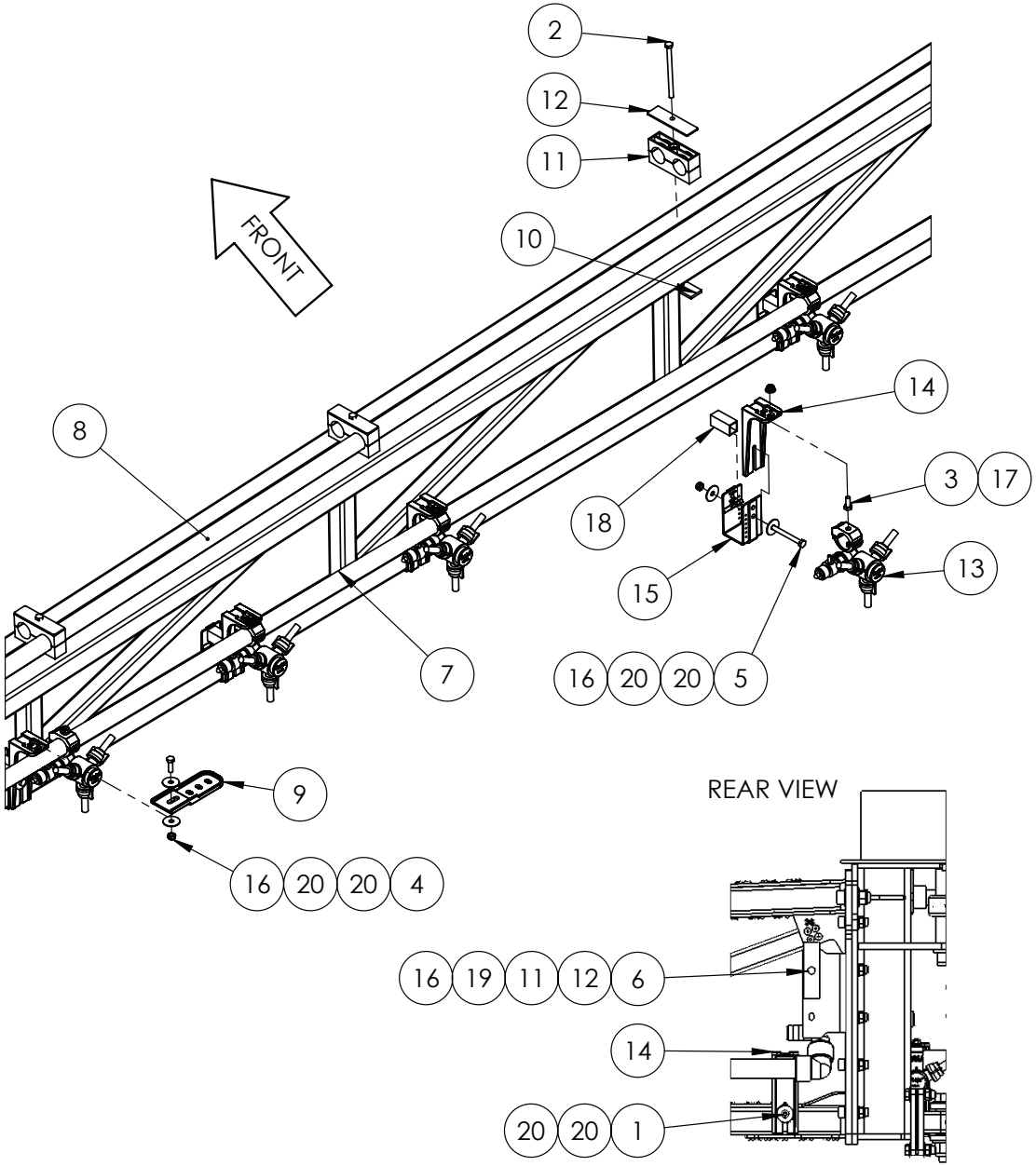

IF DESCRIPTION PREFIX IS ASSEMBLY DRAWING ONLY OR PRODUCTION DRAWING ONLY THE ITEM IS NOT FOR SALE			
ITEM	PART NUMBER	DESCRIPTION	QTY
1	GA5004696	BHCS M8 X 16 SS A2-70	1
2	GA5011501	BOLT M8 X 120 GR8.8 ZP	7
3	GA5004085	BOLT M8 X 20 GR8.8 ZP	13
4	GA5004711	BOLT M8 X 25 GR8.8 ZP	3
5	GA5052600	BOLT M8 X 75 SS A2-70	13
6	GA5004749	BOLT M8 X 80 GR8.8 ZP	1
7	GA4952830	BOOM POLY ASSEMBLY, BARE, 36M, LH OUTER SECTION, DRILLED 500mm BROARDACRE, G4, TRITECH MY24	1
8	GA4952805	BOOM POLY ASSEMBLY, 36M, OUTER SECTION, BOOM RECIRCULATION, TRITECH MY24	1
9	GA5018255	BRACKET, NOZZLE EXTENSION, PLASTIC	3
10	GA5078048	DOUBLE CLAMP PLATE BOTTOM GR4	7
11	GA5025535	JAW CLAMPS, PAIR, RCD-33.7	8
12	GA5078051	MOUNTING CLAMP, DOUBLE TYPE, PLATE, TOP, GROUP 5, RCD-5PT	8
13	GA5077970	NOZZLE BODY, TRIPLE, TRIJET, CLOCK FACE, 1", TEEJET	13
14	GA5018258	NOZZLE BRACKET, PLASTIC, L SHAPE, LONG	14
15	GA5018259	NOZZLE BRACKET, PLASTIC, U SHAPE	13
16	GA5052590	NUT M8 NYLOC SS	17
17	GA5070710	NUT WITH FLANGE, PLASTIC, M8 X 1.25	13
18	GA5066965	SPACER SUIT NOZZLE BRACKETS	13
19	GA5003643	WASHER 8mm FLAT SS HD	1
20	GA5003645	WASHER FLAT SS 5-16 X 1 1-4	34
GA6101963-04 GOLDACRES	ASSEMBLY DRAWING ONLY. BOOM WING ASSEMBLY, 36M LH, TRITECH, S2 G4, MY24		REV 00

Cable Drum Assembly, LH

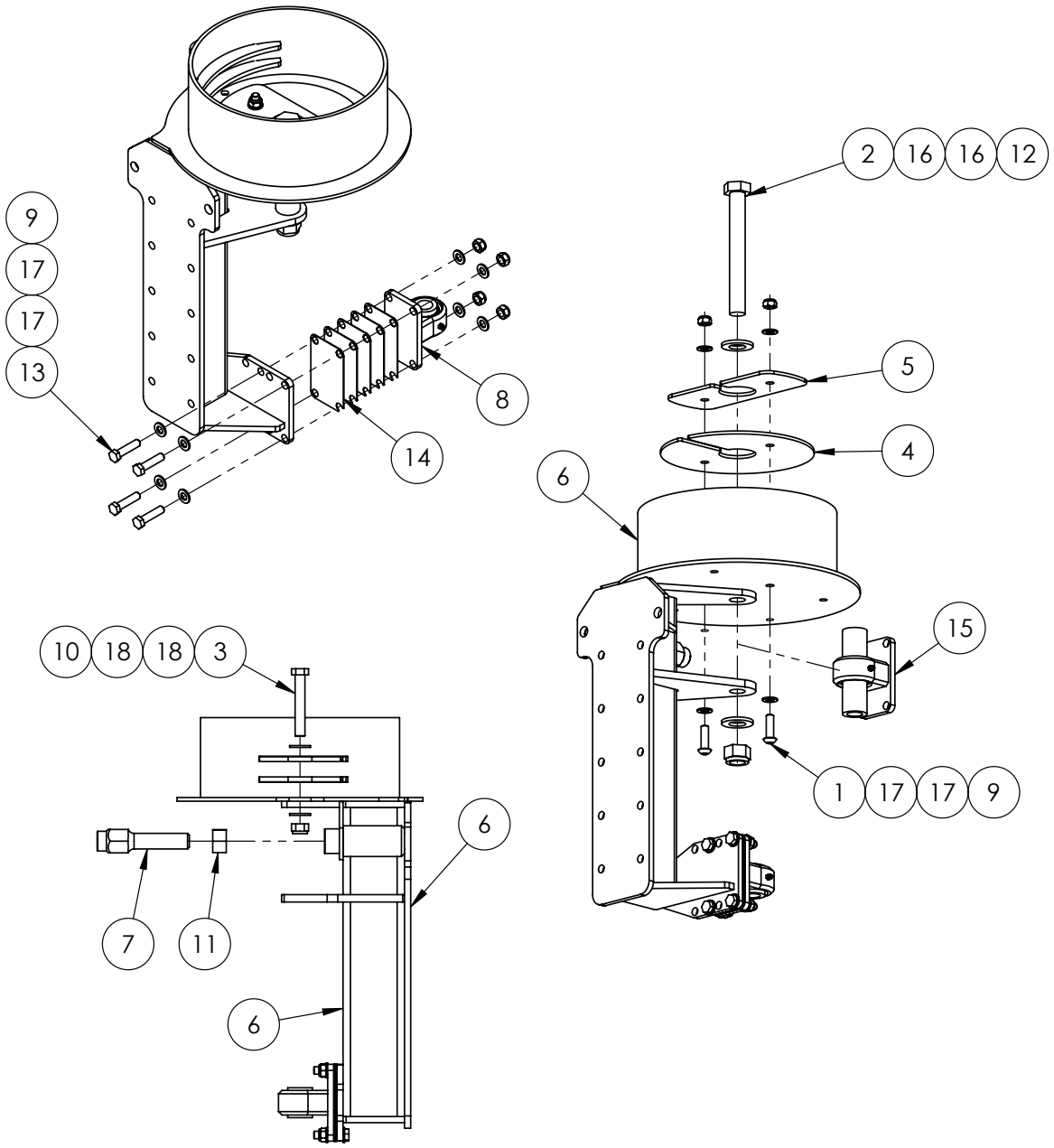

NOTE: FOR LEFT HAND SIDE BOOM ONLY

IF DESCRIPTION PREFIX IS ASSEMBLY DRAWING ONLY OR PRODUCTION DRAWING ONLY THE ITEM IS NOT FOR SALE			
ITEM	PART NUMBER	DESCRIPTION	QTY
1	GA0500176	BHCS M12 X 40 SS A2-70	2
2	GA5006151	BOLT 1 UNF 12 TPI X 8 GR8 ZP	1
3	GA5011269	BOLT M16 X 100 GR8.8 ZP	1
4	GA4504530	BOOM WEIGHT DISC CABLE DRUM 1.8KG	1
5	GA4504535	BOOM WEIGHT DISC CABLE DRUM SMALL 0.8KG	1
6	GA4659585	BOOM DRUM HINGE 24+ LH MY13	1
7	GA4572495	BOOM DRUM STOPPER BOLT 1" UNF 12 TPI	1
8	GA4932343	CABLE DRUM BEARING PIVOT KIT, LOWER, SUIT TRITECH BOOM	1
9	GA5012461	NUT M12 NYLOC ZP	6
10	GA5001029	NUT M16 NYLOC ZP	1
11	GA5010991	NUT, 1" UNF, 12 TPI, ZP	1
12	GA0500036	NUT, 1", UNF, 12 TPI, CONELOCK ZP	1
13	GA5011237	SET SCREW M12 X 50 GR8.8 ZP	4
14	DB-ADJ-16LAS	SHIM PLATE FOR REMOVABLE PIVOT ASSEMBLY	5
15	GA4932342	UPPER BEARING PIVOT KIT SUIT TRITECH DRUM HINGE	1
16	GA5017659	WASHER 1 FLAT ZP HT (5mm THICK)	2
17	GA5000577	WASHER 12mm FLAT SS HD	12
18	GA5001043	WASHER 16mm FLAT SS HD	2
GA4952340 GOLDACRES	ASSEMBLY DRAWING ONLY. CABLE DRUM, INNER BOOM, LH, TRITECH MY23		REV 00.F

Cable Drum Assembly, RH

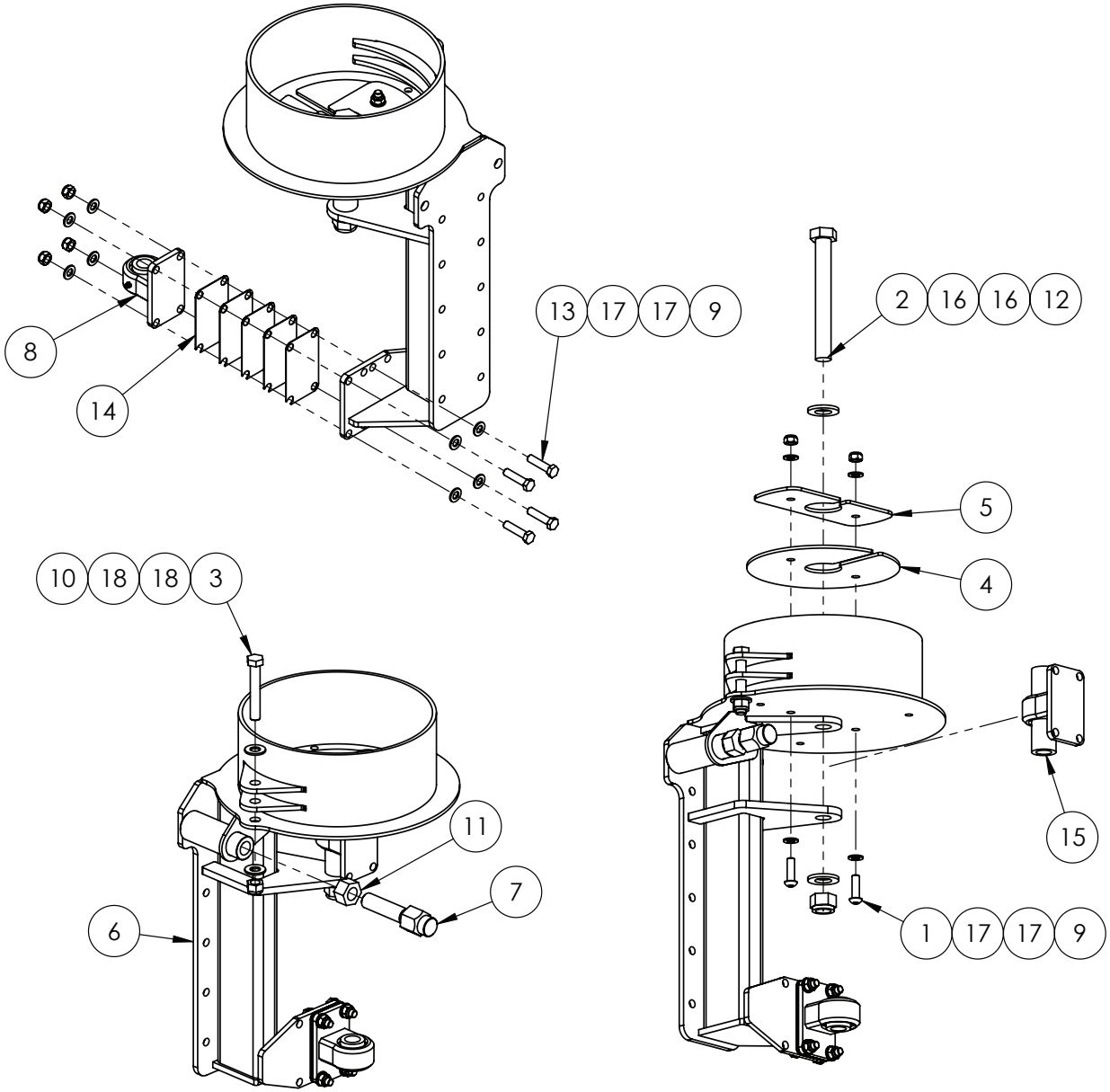

NOTE: FOR RIGHT HAND SIDE BOOM ONLY

IF DESCRIPTION PREFIX IS ASSEMBLY DRAWING ONLY OR PRODUCTION DRAWING ONLY THE ITEM IS NOT FOR SALE			
ITEM	PART NUMBER	DESCRIPTION	QTY
1	GA0500176	BHCS M12 X 40 SS A2-70	2
2	GA5006151	BOLT 1 UNF 12 TPI X 8 GR8 ZP	1
3	GA5011269	BOLT M16 X 100 GR8.8 ZP	1
4	GA4504530	BOOM WEIGHT DISC CABLE DRUM 1.8KG	1
5	GA4504535	BOOM WEIGHT DISC CABLE DRUM SMALL 0.8KG	1
6	GA4659580	BOOM DRUM HINGE 24+ RH MY13	1
7	GA4572495	BOOM DRUM STOPPER BOLT 1" UNF 12 TPI	1
8	GA4932343	CABLE DRUM BEARING PIVOT KIT, LOWER, SUIT TRITECH BOOM	1
9	GA5012461	NUT M12 NYLOC ZP	6
10	GA5001029	NUT M16 NYLOC ZP	1
11	GA5010991	NUT, 1" UNF, 12 TPI, ZP	1
12	GA0500036	NUT, 1", UNF, 12 TPI, CONELOCK ZP	1
13	GA5011237	SET SCREW M12 X 50 GR8.8 ZP	4
14	DB-ADJ-16LAS	SHIM PLATE FOR REMOVABLE PIVOT ASSEMBLY	5
15	GA4932342	UPPER BEARING PIVOT KIT SUIT TRITECH DRUM HINGE	1
16	GA5017659	WASHER 1 FLAT ZP HT (5mm THICK)	2
17	GA5000577	WASHER 12mm FLAT SS HD	12
18	GA5001043	WASHER 16mm FLAT SS HD	2
GA4952345 GOLDACRES	ASSEMBLY DRAWING ONLY. CABLE DRUM, INNER BOOM, RH, TRITECH MY23		REV 00.E

Upper Bearing Pivot Kit, Drum Hinge

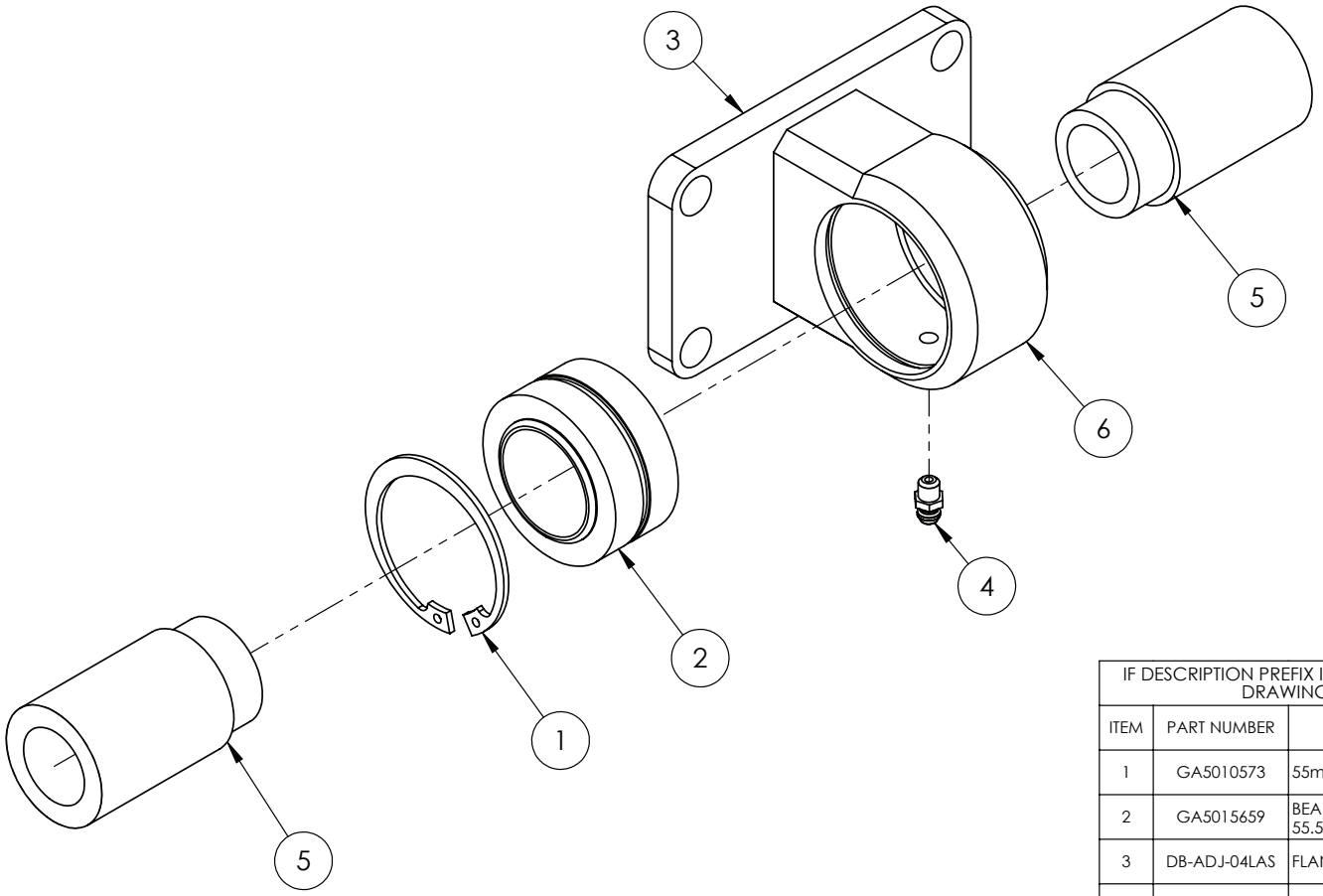

IF DESCRIPTION PREFIX IS ASSEMBLY DRAWING ONLY OR PRODUCTION DRAWING ONLY THE ITEM IS NOT FOR SALE			
ITEM	PART NUMBER	DESCRIPTION	QTY
1	GA5010573	55mm INTERNAL CIRCLIP	1
2	GA5015659	BEARING, RADIAL SPHERICAL PLAIN, 34.925mm ID X 55.56mm OD X 30.15mm THICK, GEZ 34 ES 2RS	1
3	DB-ADJ-04LAS	FLANGE PLATE FOR REMOVABLE PIVOT ASSEMBLY	1
4	GA5012203	GREASE NIPPLE 1/4" UNF SHORT	1
5	DB-ADJ-13MACH	LONG CENTRE BUSHING FOR REMOVABLE PIVOTS	2
6	GA4572390	BOOM HINGE BLOCK (WELD ON)	1
GA4932342 GOLDACRES		UPPER BEARING PIVOT KIT SUIT TRITECH DRUM HINGE	REV

Lower Bearing Pivot Kit, Drum Hinge

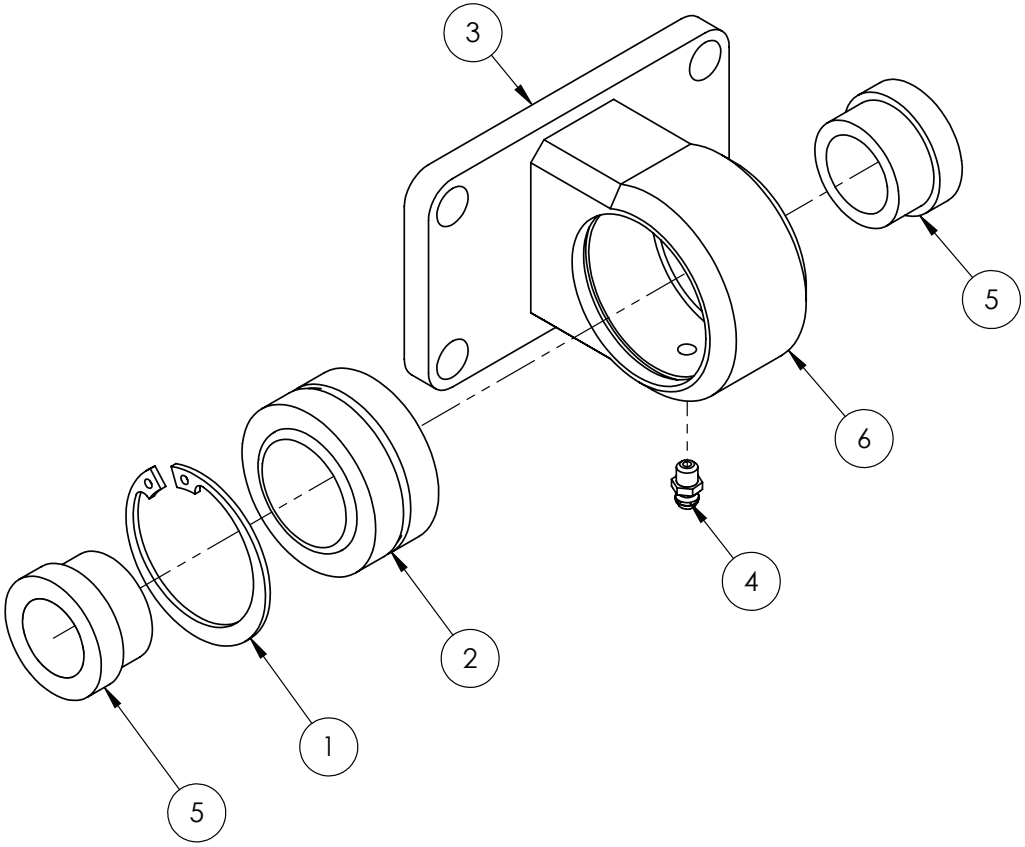

IF DESCRIPTION PREFIX IS ASSEMBLY DRAWING ONLY OR PRODUCTION DRAWING ONLY THE ITEM IS NOT FOR SALE			
ITEM	PART NUMBER	DESCRIPTION	QTY
1	GA5010573	55mm INTERNAL CIRCLIP	1
2	GA5015659	BEARING, RADIAL SPHERICAL PLAIN, 34.925mm ID X 55.56mm OD X 30.15mm THICK, GEZ 34 ES 2RS	1
3	DB-ADJ-04LAS	FLANGE PLATE FOR REMOVABLE PIVOT ASSEMBLY	1
4	GA5012203	GREASE NIPPLE 1/4" UNF SHORT	1
5	DB-ADJ-02MACH	SHORT CENTRE BUSHING FOR REMOVABLE PIVOTS	2
6	GA4572390	BOOM HINGE BLOCK (WELD ON)	1
GA4932343 GOLDACRES		CABLE DRUM BEARING PIVOT KIT, LOWER, SUIT TRITECH BOOM	REV

Boom Wing, Aluminium Outer Mounting

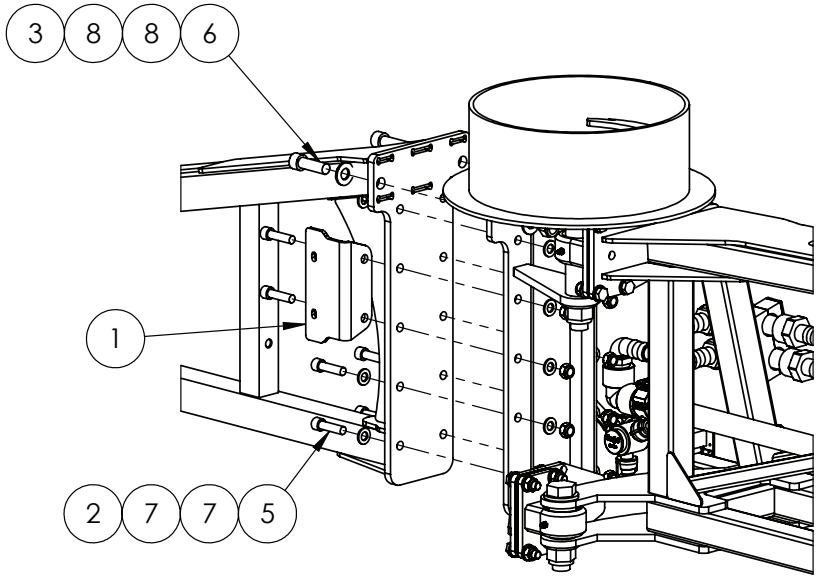

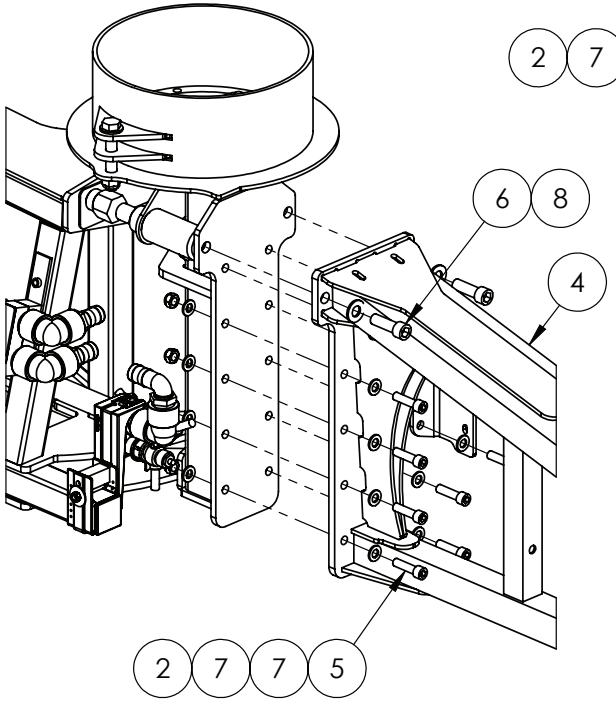

IF DESCRIPTION PREFIX IS ASSEMBLY DRAWING ONLY OR PRODUCTION DRAWING ONLY THE ITEM IS NOT FOR SALE			
ITEM	PART NUMBER	DESCRIPTION	QTY
1	GA4522725	BOOM HOSE HOLDER PLATE OUTER	1
2	GA5012461	NUT M12 NYLOC ZP	10
3	GA5001029	NUT M16 NYLOC ZP	1
4	GA4659820	OUTER WING ALUMINIUM 24M TO SUIT 36M INNER WING 2012	1
5	GA5000325	SHCS M12 X 45 GR12.9 ZP	10
6	GA5000935	SHCS M16 X 50 GR12.9 ZP	2
7	GA5000577	WASHER 12mm FLAT SS HD	20
8	GA5001043	WASHER 16mm FLAT SS HD	3
GA4951610-02 GOLDACRES		ASSEMBLY DRAWING ONLY. BOOM WING ASSEMBLY, 24M LH, TRITECH, S2 G4, MY24	REV 00

Breakaway, Mounting Assembly, LH

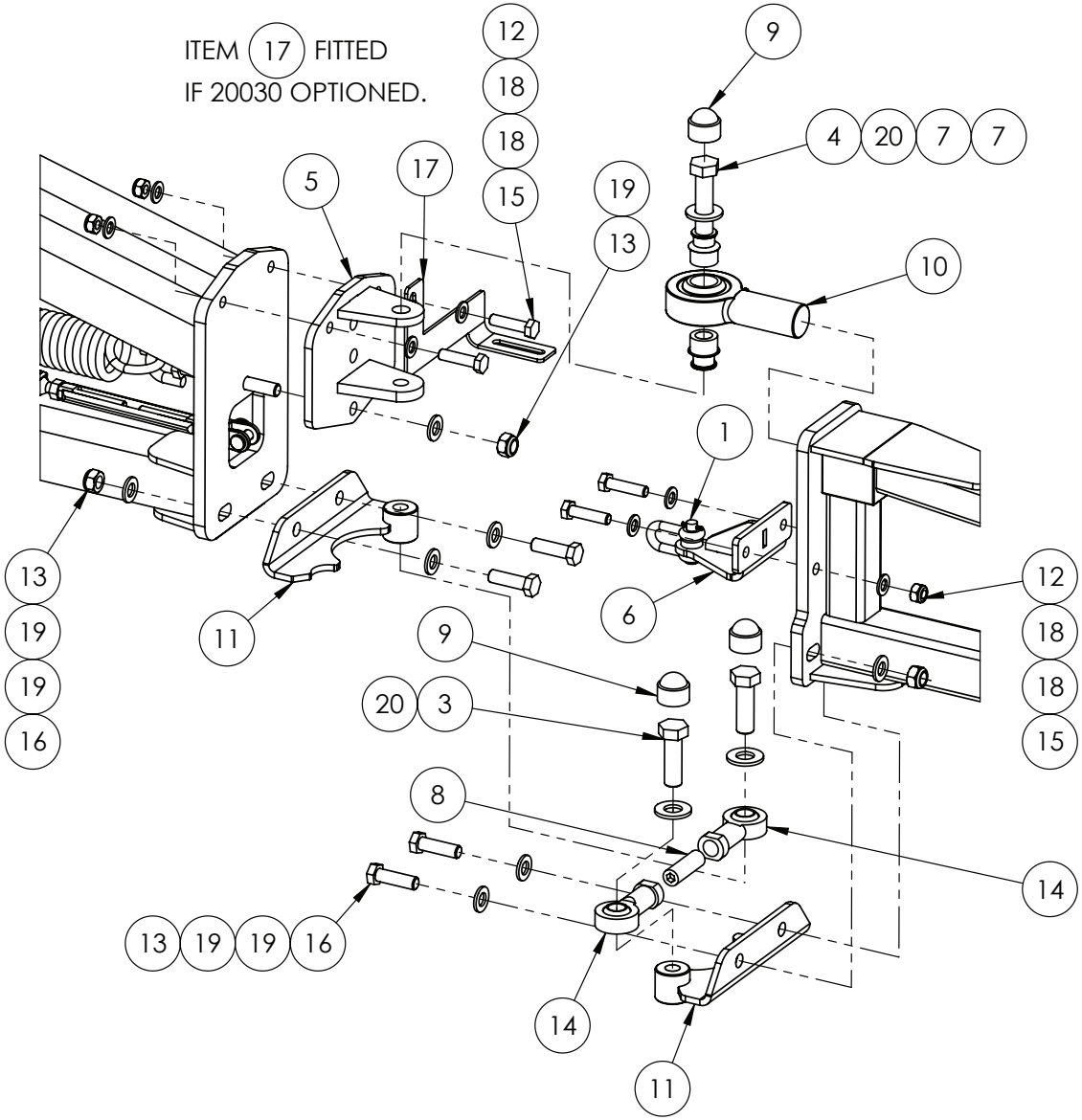

IF DESCRIPTION PREFIX IS ASSEMBLY DRAWING ONLY OR PRODUCTION DRAWING ONLY THE ITEM IS NOT FOR SALE			
ITEM	PART NUMBER	DESCRIPTION	QTY
1	GA5071060	10mm UTILITY CLEVIS 24CST002	1
2	GA4656123	ALUM BREAKAWAY 2M, SUIT 3D BREAKAWAY 2.0	1
3	GA5000931	BOLT M16 X 50 GR8.8 ZP	2
4	GA5011297	BOLT M16 X 90 GR8.8 ZP	1
5	GA4656131	BREAKAWAY MK3.1 ROSE END CLEVIS	1
6	GA4659810	BREAKAWAY ROSE END CLEVIS 3D 2.0	1
7	GA4552225	BREAKAWAY ROSE END SPACER BUSH 3D 2.0	2
8	GA5071105	GRUB SCREW M16 X 50	1
9	GA5075080	HEX NUT PROTECTION CAP SUIT M16 BLACK	3
10	GA5070530	LARGE ROSE END 1" X 1 1/4" UNF BB074-VM16	1
11	GA4659336	LOWER PIVOT BRACKET MK3.3	2
12	GA5000141	NUT M10 NYLOC ZP	4
13	GA5012461	NUT M12 NYLOC ZP	5
14	GA5014469	ROD END FEMALE 16mm	2
15	GA5011161	SET SCREW M10 X 40 GR8.8 ZP	4
16	GA5000319	SET SCREW M12 X 40 GR8.8 ZP	4
17	GA4414745	TRITECH MY23 ROWCROP NOZZLE BRACKET LH	1
18	GA5000117	WASHER 10mm FLAT SS HD	8
19	GA5000577	WASHER 12mm FLAT SS HD	9
20	GA5001043	WASHER 16mm FLAT SS HD	3
GA4951610-03 GOLDACRES		ASSEMBLY DRAWING ONLY. BOOM WING ASSEMBLY, 24M LH, TRITECH, S2 G4, MY24	REV 00.C

Breakaway, Mounting Assembly, RH

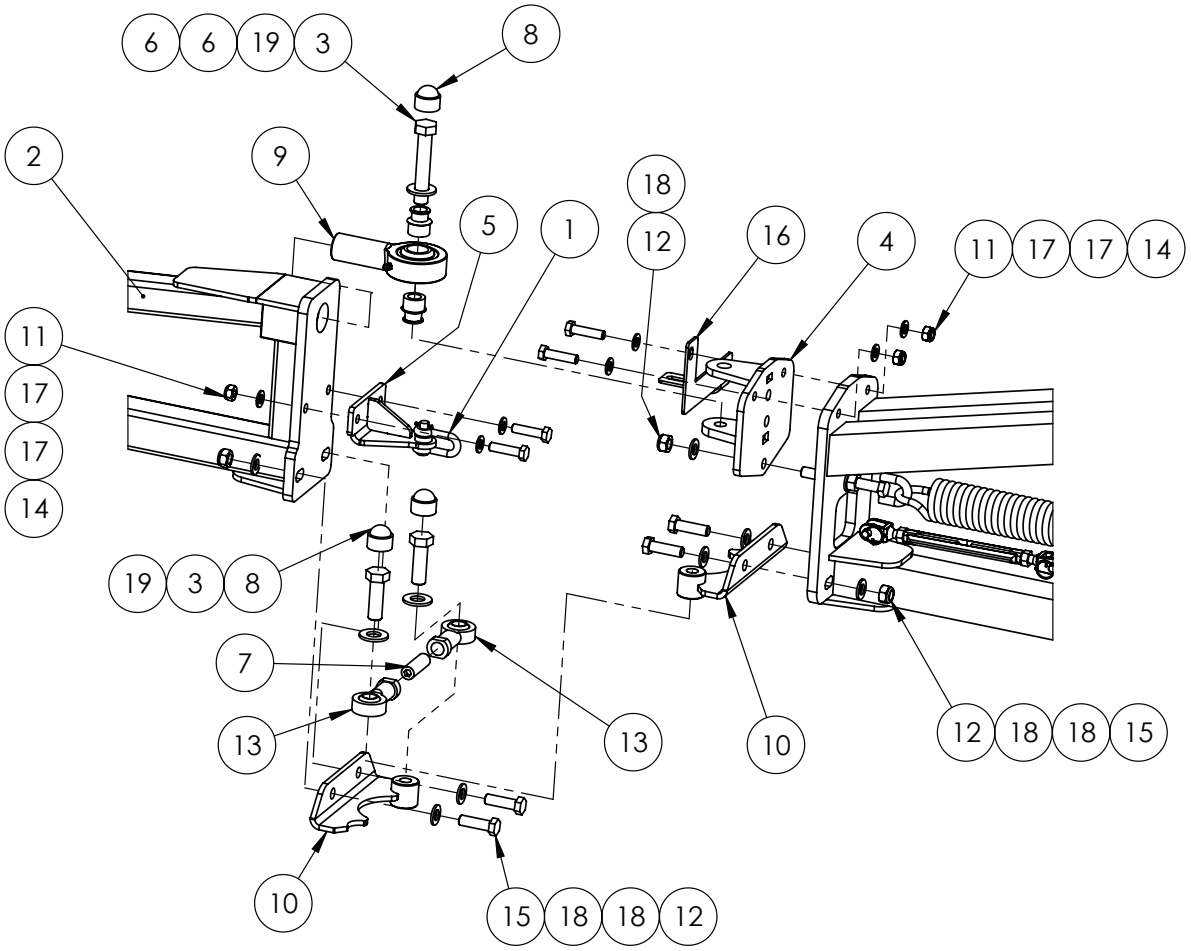

IF DESCRIPTION PREFIX IS ASSEMBLY DRAWING ONLY OR PRODUCTION DRAWING ONLY THE ITEM IS NOT FOR SALE			
ITEM	PART NUMBER	DESCRIPTION	QTY
1	GA5071060	10mm UTILITY CLEVIS 24CST002	1
2	GA4656123	ALUM BREAKAWAY 2M, SUIT 3D BREAKAWAY 2.0	1
3	GA5000931	BOLT M16 X 50 GR8.8 ZP	3
4	GA4656131	BREAKAWAY MK3.1 ROSE END CLEVIS	1
5	GA4659810	BREAKAWAY ROSE END CLEVIS 3D 2.0	1
6	GA4552225	BREAKAWAY ROSE END SPACER BUSH 3D 2.0	2
7	GA5071105	GRUB SCREW M16 X 50	1
8	GA5075080	HEX NUT PROTECTION CAP SUIT M16 BLACK	3
9	GA5070530	LARGE ROSE END 1" X 1 1/4" UNF BB074-VM16	1
10	GA4659336	LOWER PIVOT BRACKET MK3.3	2
11	GA5000141	NUT M10 NYLOC ZP	4
12	GA5012461	NUT M12 NYLOC ZP	5
13	GA5014469	ROD END FEMALE 16mm	2
14	GA5011161	SET SCREW M10 X 40 GR8.8 ZP	4
15	GA5000319	SET SCREW M12 X 40 GR8.8 ZP	4
16	GA4414750	TRITECH MY23 ROWCROP NOZZLE BRACKET RH	1
17	GA5000117	WASHER 10mm FLAT SS HD	8
18	GA5000577	WASHER 12mm FLAT SS HD	9
19	GA5001043	WASHER 16mm FLAT SS HD	3
GA4951615-03 GOLDACRES	ASSEMBLY DRAWING ONLY. BOOM WING ASSEMBLY, 24M RH, TRITECH, S2 G4, MY24		REV 00.D

3D Breakaway, Pivot Assembly

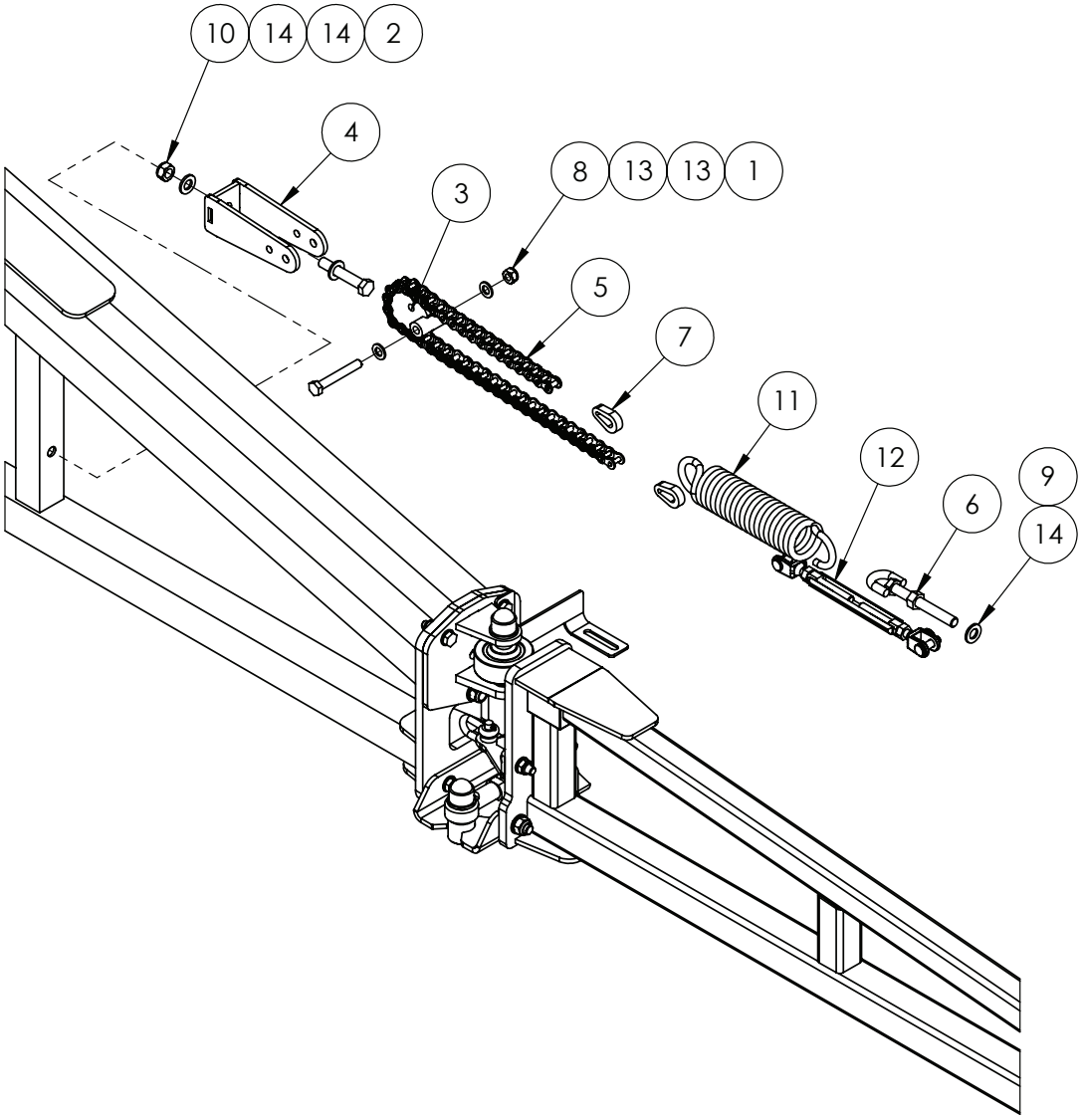

IF DESCRIPTION PREFIX IS ASSEMBLY DRAWING ONLY OR PRODUCTION DRAWING ONLY THE ITEM IS NOT FOR SALE			
ITEM	PART NUMBER	DESCRIPTION	QTY
1	GA5011163	BOLT M10 X 70 GR8.8 ZP	1
2	GA5000347	BOLT M12 X 70 GR8.8 ZP	1
3	GA4659800	BREAK AWAY CENTRE PIVOT FAB ASSEM	1
4	GA4659805	BREAKAWAY MOUNT	1
5	GA5068985	CHAIN, 5/8", 41 PITCH BREAKAWAY HINGE	1
6	GA5075150	EYE BOLT 12mm X 100mm SHORT	1
7	GA4505695	LINK PLATE CHAIN END	2
8	GA5000141	NUT M10 NYLOC ZP	1
9	GA5000559	NUT M12 HEX ZP	1
10	GA5012461	NUT M12 NYLOC ZP	1
11	GA5016605	SPRING, TENSION, 51.5 OD X 260 LONG X 8mm, BREAKAWAY	1
12	GA5070505	TURNBUCKLE, S/S 10.mm JAW/JAW	1
13	GA5000117	WASHER 10mm FLAT SS HD	2
14	GA5000577	WASHER 12mm FLAT SS HD	3
GA4951610-03 GOLDACRES		ASSEMBLY DRAWING ONLY. BOOM WING ASSEMBLY, 24M LH, TRITECH, S2 G4, MY24	REV 00

Boom Fold Support Bracket

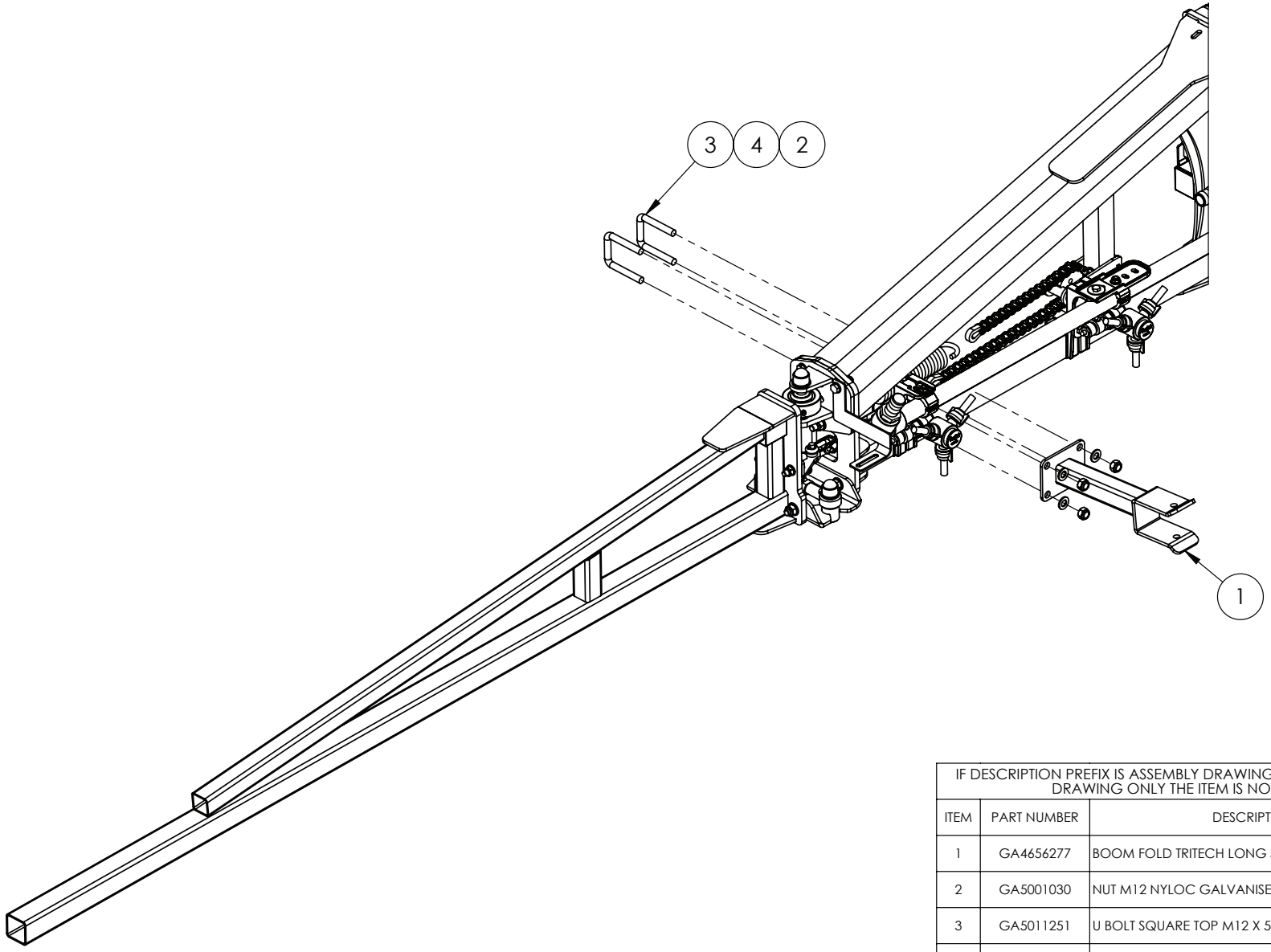

IF DESCRIPTION PREFIX IS ASSEMBLY DRAWING ONLY OR PRODUCTION DRAWING ONLY THE ITEM IS NOT FOR SALE			
ITEM	PART NUMBER	DESCRIPTION	QTY
1	GA4656277	BOOM FOLD TRITECH LONG SUPPORT BRACKET	1
2	GA5001030	NUT M12 NYLOC GALVANISED	4
3	GA5011251	U BOLT SQUARE TOP M12 X 52mm X 80mm	2
4	GA5000577	WASHER 12mm FLAT SS HD	4
GA4951610-04 GOLDACRES		ASSEMBLY DRAWING ONLY. BOOM WING ASSEMBLY, 24M LH, TRITECH, S2 G4, MY24	REV 00

LH Boom End Protector & Bump Stop

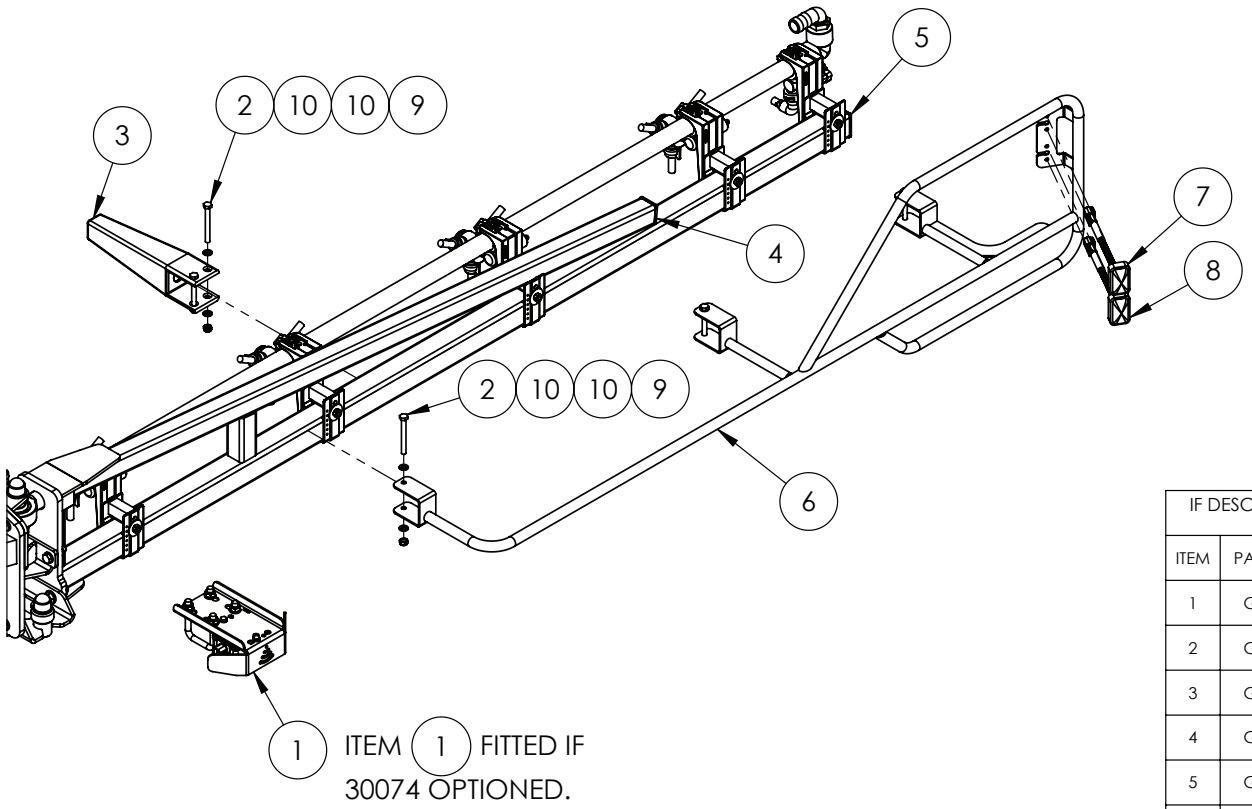

IF DESCRIPTION PREFIX IS ASSEMBLY DRAWING ONLY OR PRODUCTION DRAWING ONLY THE ITEM IS NOT FOR SALE			
ITEM	PART NUMBER	DESCRIPTION	QTY
1	GA4952700	ASSEMBLY DRAWING ONLY, BRACKET, SENSOR, RAVEN XRT, SUITS TRITECH MY23	1
2	GA5052600	BOLT M8 X 75 SS A2-70	5
3	GA5006226	BOOM STOPPER 210mm LONG	1
4	GA5002963	END CAP, PLASTIC, BLACK, INSERT, RHS. 38 X 38, 1.0 - 3.5mm WALL	1
5	GA5003783	END CAP, PLASTIC, BLACK, INSERT, RHS. 50 X 50, 0.8 - 2.5mm WALL	1
6	GA4656317	LH BOOM END PROTECTOR EASY FIT MY13	1
7	GA3000267	LIGHT, LED, ORANGE, CLEARANCE, DEUTSCH CONNECTOR	1
8	GA3000266	LIGHT, LED, RED, FENCE, DEUTSCH CONNECTOR	1
9	GA5004917	NUT M8 NYLOC ZP	5
10	GA5003651	WASHER 8mm FLAT SS	10
GA4951610-05 GOLDACRES		ASSEMBLY DRAWING ONLY. BOOM WING ASSEMBLY, 24M LH, TRITECH, S2 G4, MY24	REV 00

RH Boom End Protector & Bump Stop

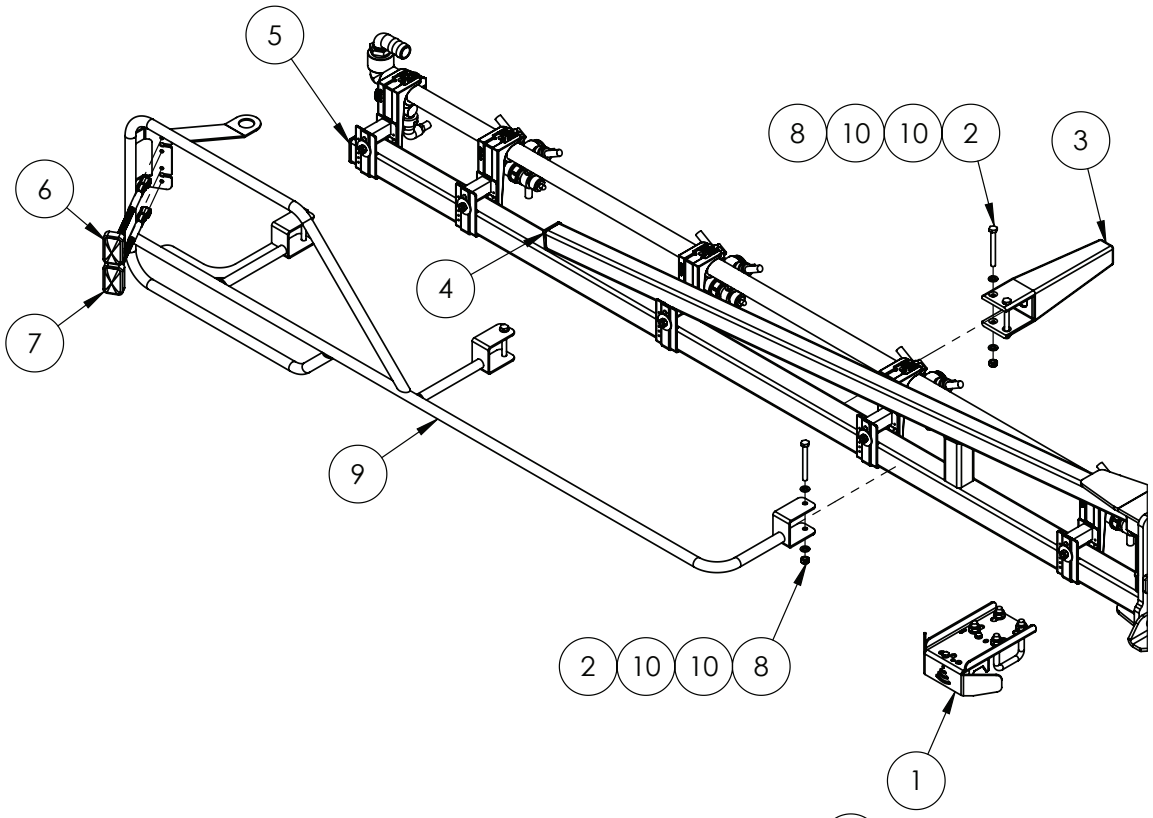

ITEM (1) FITTED IF 30074 OPTIONED.

IF DESCRIPTION PREFIX IS ASSEMBLY DRAWING ONLY OR PRODUCTION DRAWING ONLY THE ITEM IS NOT FOR SALE			
ITEM	PART NUMBER	DESCRIPTION	QTY
1	GA4952700	ASSEMBLY DRAWING ONLY, BRACKET, SENSOR, RAVEN XRT, SUITS TRITECH MY23	1
2	GA5052600	BOLT M8 X 75 SS A2-70	5
3	GA5006226	BOOM STOPPER 210mm LONG	1
4	GA5002963	END CAP, PLASTIC, BLACK, INSERT, RHS. 38 X 38, 1.0 - 3.5mm WALL	1
5	GA5003783	END CAP, PLASTIC, BLACK, INSERT, RHS. 50 X 50, 0.8 - 2.5mm WALL	1
6	GA3000267	LIGHT, LED, ORANGE, CLEARANCE, DEUTSCH CONNECTOR	1
7	GA3000266	LIGHT, LED, RED, FENCE, DEUTSCH CONNECTOR	1
8	GA5004917	NUT M8 NYLOC ZP	5
9	GA4656316	RH BOOM END PROTECTOR EASY FIT MY13	1
10	GA5003651	WASHER 8mm FLAT SS	10
GA4951615-05 GOLDACRES		ASSEMBLY DRAWING ONLY. BOOM WING ASSEMBLY, 24M RH, TRITECH, S2 G4, MY24	REV 00

Breakaway, Nozzle Bracket Assembly

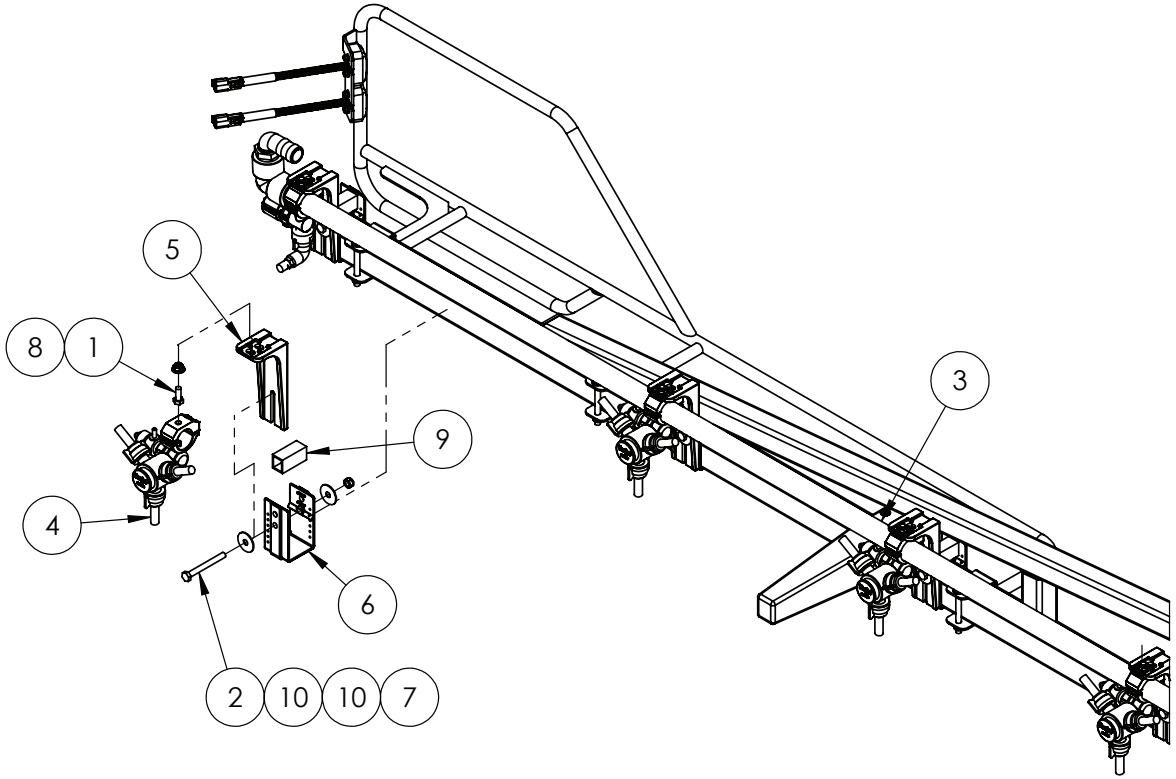

IF DESCRIPTION PREFIX IS ASSEMBLY DRAWING ONLY OR PRODUCTION DRAWING ONLY THE ITEM IS NOT FOR SALE			
ITEM	PART NUMBER	DESCRIPTION	QTY
1	GA5004085	BOLT M8 X 20 GR8.8 ZP	5
2	GA5052600	BOLT M8 X 75 SS A2-70	5
3	GA4953025	BOOM POLY ASSEMBLY, BARE, LH 24M BREAKAWAY SECTION, DRILLED 500mm BROADACRE, TRITECH MY24	1
4	GA5077970	NOZZLE BODY, TRIPLE, TRIJET, CLOCK FACE, 1", TEEJET	4
5	GA5018258	NOZZLE BRACKET, PLASTIC, L SHAPE, LONG	5
6	GA5018259	NOZZLE BRACKET, PLASTIC, U SHAPE	5
7	GA5052590	NUT M8 NYLOC SS	5
8	GA5070710	NUT WITH FLANGE, PLASTIC, M8 X 1.25	5
9	GA5066965	SPACER SUIT NOZZLE BRACKETS	5
10	GA5003645	WASHER FLAT SS 5-16 X 1 1-4	10
GA4951610-05 GOLDACRES		ASSEMBLY DRAWING ONLY. BOOM WING ASSEMBLY, 24M LH, TRITECH, S2 G4, MY24	REV 00

Boom Cables & Cable Kits

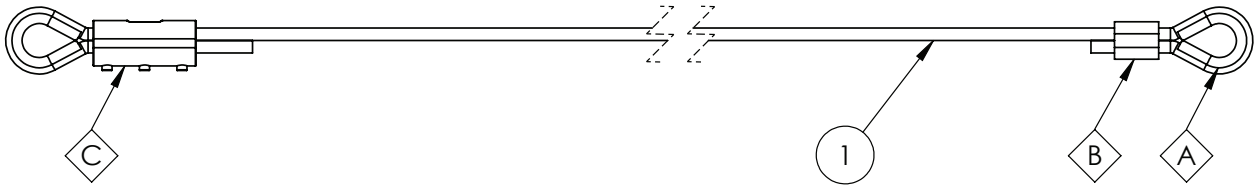

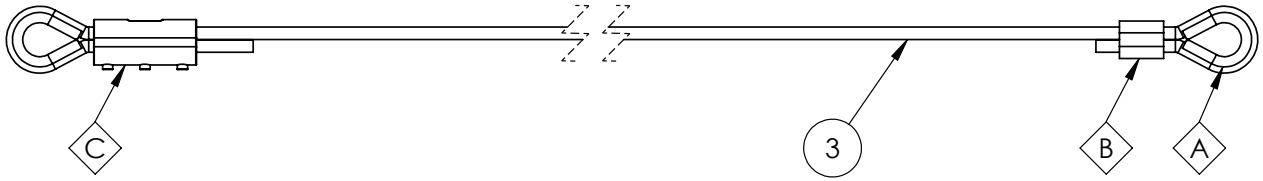

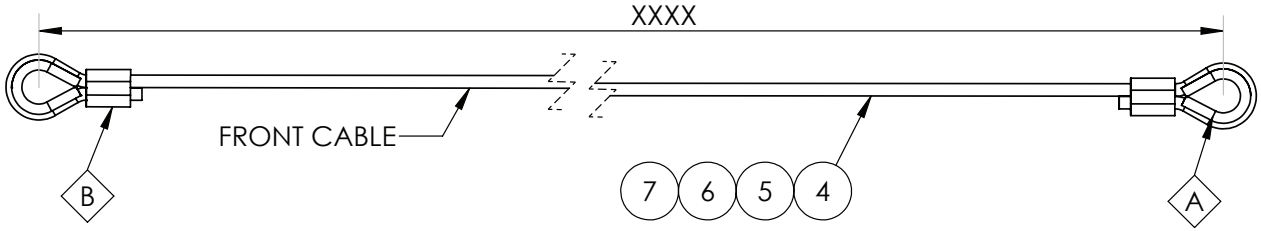

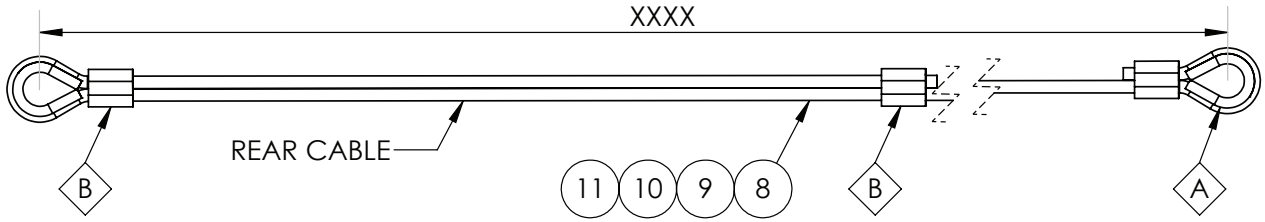

REPLACEMENT PARTS			
ITEM	PART NUMBER	DESCRIPTION	QTY
-	GA5001965	HEAT SHRINK 25.4mm BLACK 5M PER ROL	-
A	GA5000215	THIMBLE, 11 - 12, SUIT 10mm CABLE	-
B	GA5005391	FERRULE, ALUMINIUM, 40 LONG X 4.5 WALL, CODE 11, SUIT 10mm CABLE	-
C	GA5073680	CABLE CLAMP, S-BLOCK, 10mm	-
D	GA5005391	FERRULE, ALUMINIUM, 40 LONG X 4.5 WALL, CODE 11, SUIT 10mm CABLE	-

IF DESCRIPTION PREFIX IS ASSEMBLY DRAWING ONLY OR PRODUCTION DRAWING ONLY THE ITEM IS NOT FOR SALE			
ITEM	PART NUMBER	DESCRIPTION	QTY
1	GA1100033	UNIVERSAL BOOM CABLE KIT, FRONT, SUIT DUAL CABLE STYLE	-
2	GA1100034	UNIVERSAL BOOM CABLE KIT, REAR, SUIT DUAL CABLE STYLE	-
3	GA1100035	UNIVERSAL BOOM CABLE KIT, SUIT WRAP AROUND DRUM, SINGLE CABLE STYLE	-
4	GA4933660	CABLE FRONT, BOOM BI-FOLD, TRITECH 24 - 30M MY17	-
5	GA4933680	CABLE FRONT, BOOM BI-FOLD, TRITECH 33 - 36M MY17	-
6	GA4933670	CABLE FRONT, BOOM, TRITECH 24 - 30M MY17	-
7	GA4933640	CABLE FRONT, BOOM, TRITECH 24 - 36M MY17	-
8	GA4933665	CABLE REAR, BOOM BI-FOLD, TRITECH 24 - 30M MY17	-
9	GA4933685	CABLE REAR, BOOM BI-FOLD, TRITECH 33 - 36M MY17	-
10	GA4933675	CABLE REAR, BOOM, TRITECH 24 - 30M MY17	-
11	GA4933645	CABLE REAR, BOOM, TRITECH 24 - 36M MY17	-
GA7800348 GOLDACRES		BOOM CABLES, 24-36M, TRI-TECH	REV

CONTINUE OVER PAGE

Boom Cable Only - Lengths

PART NUMBER	DESCRIPTION	QTY
GA5000073	CABLE, 10mm, SOLID CORE, HEAVY DUTY, GALVANISED	SEE BELOW
	24-30m, FRONT, CABLE CUT TO LENGTH (EYE TO EYE LENGTH 5140mm)	5490mm X 2
	24-30m, REAR, CABLE CUT TO LENGTH (EYE TO EYE LENGTH 5760mm)	6830mm X 2
	24-30m, BI-FOLD FRONT, CABLE CUT TO LENGTH (EYE TO EYE LENGTH 4710mm)	5065mm X 2
	24-30m, BI-FOFLD REAR, CABLE CUT TO LENGTH (EYE TO EYE LENGTH 4700mm)	5720mm X 2
	33-36m, FRONT, CABLE CUT TO LENGTH (EYE TO EYE LENGTH 6820mm)	7200mm X 2
	33-36m, REAR, CABLE CUT TO LENGTH (EYE TO EYE LENGTH 7450mm)	8530mm X 2
	33-36m, BI-FOLD FRONT, CABLE CUT TO LENGTH (EYE TO EYE LENGTH 6170mm)	6765mm X 2
	33-36m, BI-FOLD REAR, CABLE CUT TO LENGTH (EYE TO EYE LENGTH 6170mm)	7465mm X 2

GA7800348 GOLDACRES	BOOM CABLES, 24-36M, TRI-TECH	REV

13 - Wheels & Mudguards

Rims & Tyres Options

REPLACEMENT PARTS			
ITEM	PART NUMBER	DESCRIPTION	QTY
-	GA5071810	WHEEL NUT COVER SUITS 3/4" UNF WHEEL NUT, BLACK PLASTIC, G3 G4 SERIES	-
-	GA0500012	WHEEL NUT, 3/4" UNF, G3 G4	-
-	GA4553180	WASHER, WHEEL NUT, 3/4", TAPERED, G3 G4	-

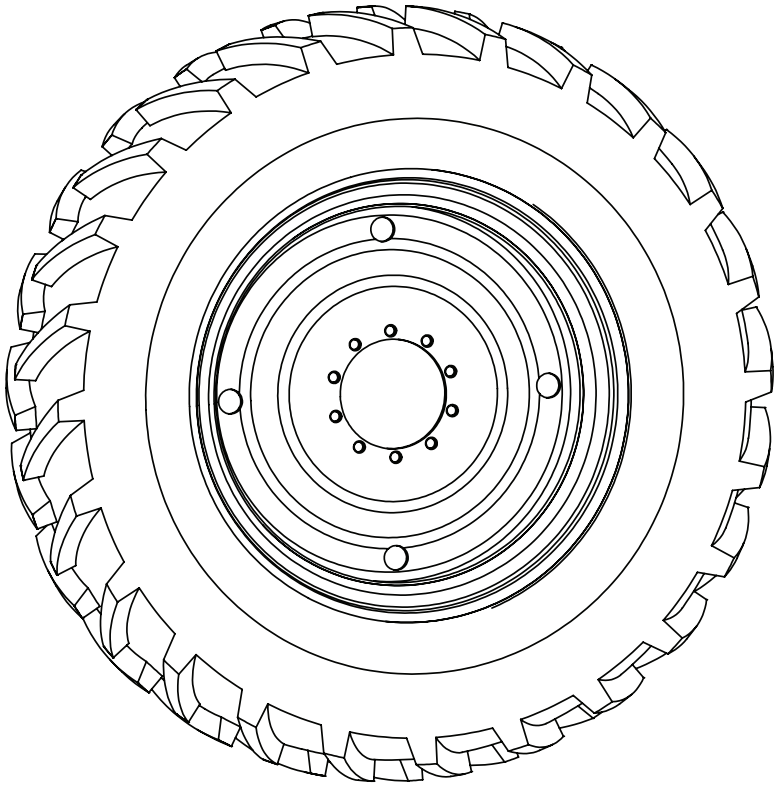

IF DESCRIPTION PREFIX IS ASSEMBLY DRAWING ONLY OR PRODUCTION DRAWING ONLY THE ITEM IS NOT FOR SALE			
ITEM	PART NUMBER	DESCRIPTION	QTY
40019	GA5018820	WHEEL DW15 X 38 10 STUD 0 OFFSET	-
	GA5001109	TYRE 460/85R38 (18.4R38) 155A8/151B HR45 R1WTL	-
40018	GA5071285	WHEEL DW13 X 46, +52.5mm OFFSET, G3 G4	-
	GA5066233	WHEEL DD13 X 46, 10 STUD ON 335mm PCD, ZERO OFFSET, G3 G4	-
	GA5067025	TYRE 380/90 R46 156 A8/B	-
40028	GA1500004	WHEEL, DD16 X 46, 0mm OFFSET, 10 STUD 335 PCD, G4, G6, G8	-
	GA5066230	TYRE 480/80 R46 (158 A8)	-
40001	GA1500082	WHEEL, DW18 X 42, 10 STUD ON 335mm PCD, NEGATIVE 20mm OFFSET	-
	GA5020831	TYRE, RADIAL 520/85R42 (20.8 X 42), HR45 X-LOAD 169A8	-
GA7800225 GOLDACRES		CROP CRUISER, G4, SERIES 2, RIM & TYRE OPTIONS	REV 00

Mudguard Axle Mount, Front, Fixed, 2WD

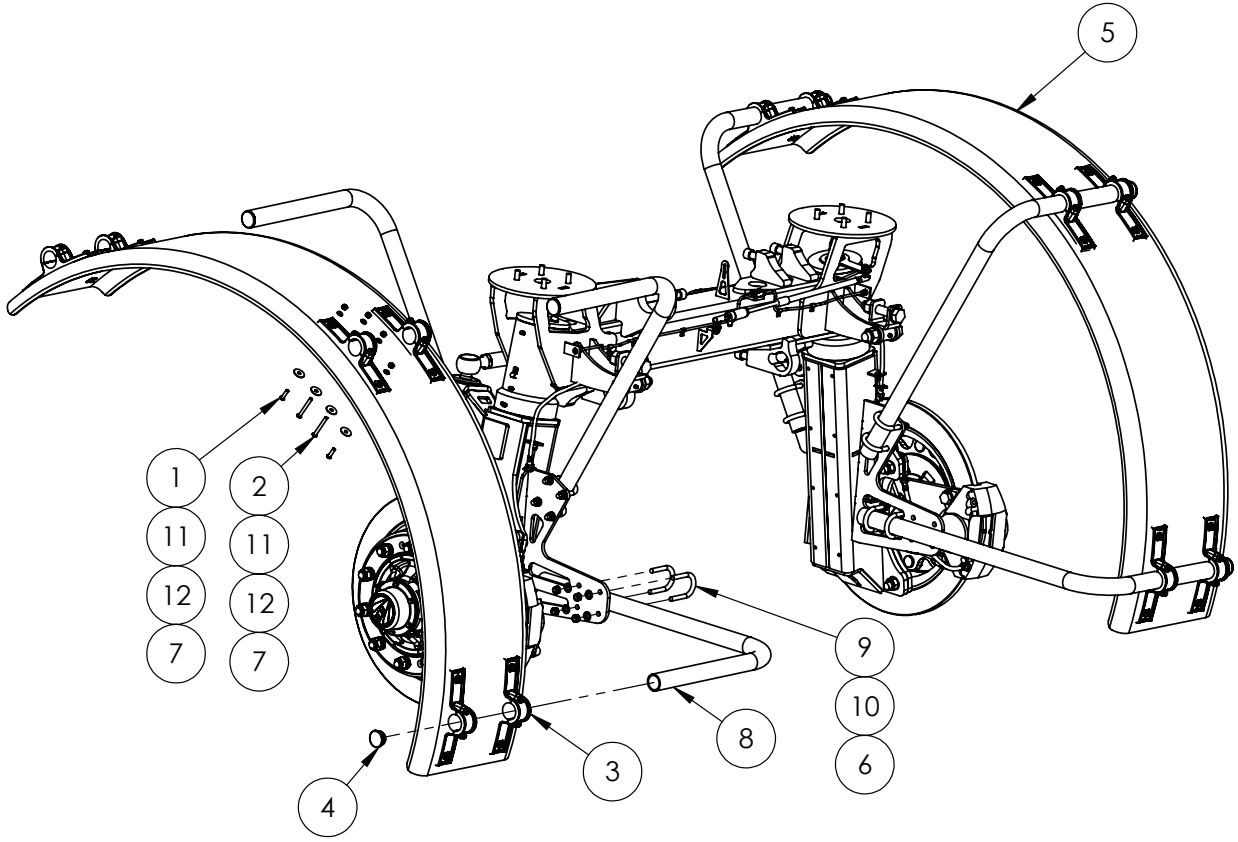

IF DESCRIPTION PREFIX IS ASSEMBLY DRAWING ONLY OR PRODUCTION DRAWING ONLY THE ITEM IS NOT FOR SALE			
ITEM	PART NUMBER	DESCRIPTION	QTY
1	GA5050680	BHCS M8 X 30 SS A2-70	24
2	GA5078889	BHCS M8 X 70 SS A2-70	24
3	GA5078888	BRACKET, MUDGUARD MOUNT ASSEMBLY, SUIT 48.5mm PIPE	12
4	GA5003925	END CAP, 45 mm ROUND, BLACK PLASTIC	6
5	GA5003323	MUDGUARD, BLACK PLASTIC, 400 WIDE X 1000 RADIUS	2
	GA5003825	MUDGUARD, BLACK PLASTIC, 500 WIDE X 1000 RADIUS	2
6	GA5012461	NUT M12 NYLOC ZP	24
7	GA5004917	NUT M8 NYLOC ZP	48
8	GA5078886	PIPE, MUD GUARD, FRONT 2WD WHEEL, FRONT, MID, & REAR, G4 S2	6
9	GA5071209	U BOLT M12 X 91L X 50W RT G/P	12
10	GA5000577	WASHER 12mm FLAT SS HD	24
11	GA5003645	WASHER 5/16" ID X 1 1/4" OD FLAT SS	48
12	GA5003651	WASHER 8mm FLAT SS	48
GA7800243 GOLDACRES		ASSEMBLY DRAWING ONLY, MUDGUARDS, 400mm, 2WD, FRONT AXLE MOUNT, G4 S2, MY24	REV

Mudguard Axle Mount, Front, 2WD, Adjustable, 2-3mt

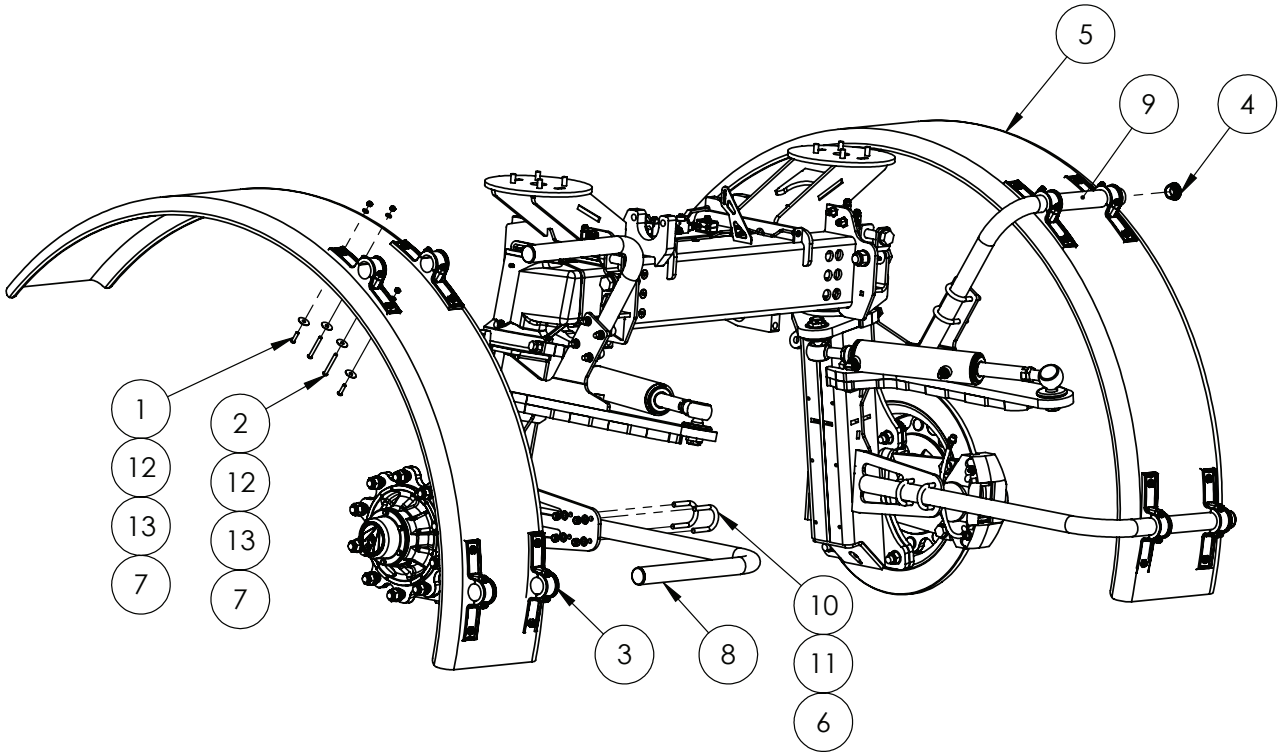

IF DESCRIPTION PREFIX IS ASSEMBLY DRAWING ONLY OR PRODUCTION DRAWING ONLY THE ITEM IS NOT FOR SALE			
ITEM	PART NUMBER	DESCRIPTION	QTY
1	GA5050680	BHCS M8 X 30 SS A2-70	16
2	GA5078889	BHCS M8 X 70 SS A2-70	16
3	GA5078888	BRACKET, MUDGUARD MOUNT ASSEMBLY, SUIT 48.5mm PIPE	8
4	GA5003925	END CAP, 45 mm ROUND, BLACK PLASTIC	4
5	GA5003323	MUDGUARD, BLACK PLASTIC, 400 WIDE X 1000 RADIUS	2
	GA5003825	MUDGUARD, BLACK PLASTIC, 500 WIDE X 1000 RADIUS	2
6	GA5012461	NUT M12 NYLOC ZP	16
7	GA5004917	NUT M8 NYLOC ZP	32
8	GA5078886	PIPE, MUD GUARD, FRONT 2WD WHEEL, FRONT, MID, & REAR, G4 S2	2
9	GA5078428	PIPE, MUDGUARD REAR WHEEL 480/80R38 MIDDLE PIPE, G3 G4 SERIES	2
10	GA5071209	U BOLT M12 X 91L X 50W RT G/P	8
11	GA5000577	WASHER 12mm FLAT SS HD	16
12	GA5003645	WASHER 5/16" ID X 1 1/4" OD FLAT SS	32
13	GA5003651	WASHER 8mm FLAT SS	32
GA7800244 GOLDACRES		ASSEMBLY DRAWING ONLY, MUDGUARDS, ADJUSTABLE AXLE, 2-3MT, 2WD, G4 S2, MY24	REV

Mudguard Axle Mount, Front, 2WD, Adjustable, 3-4mt

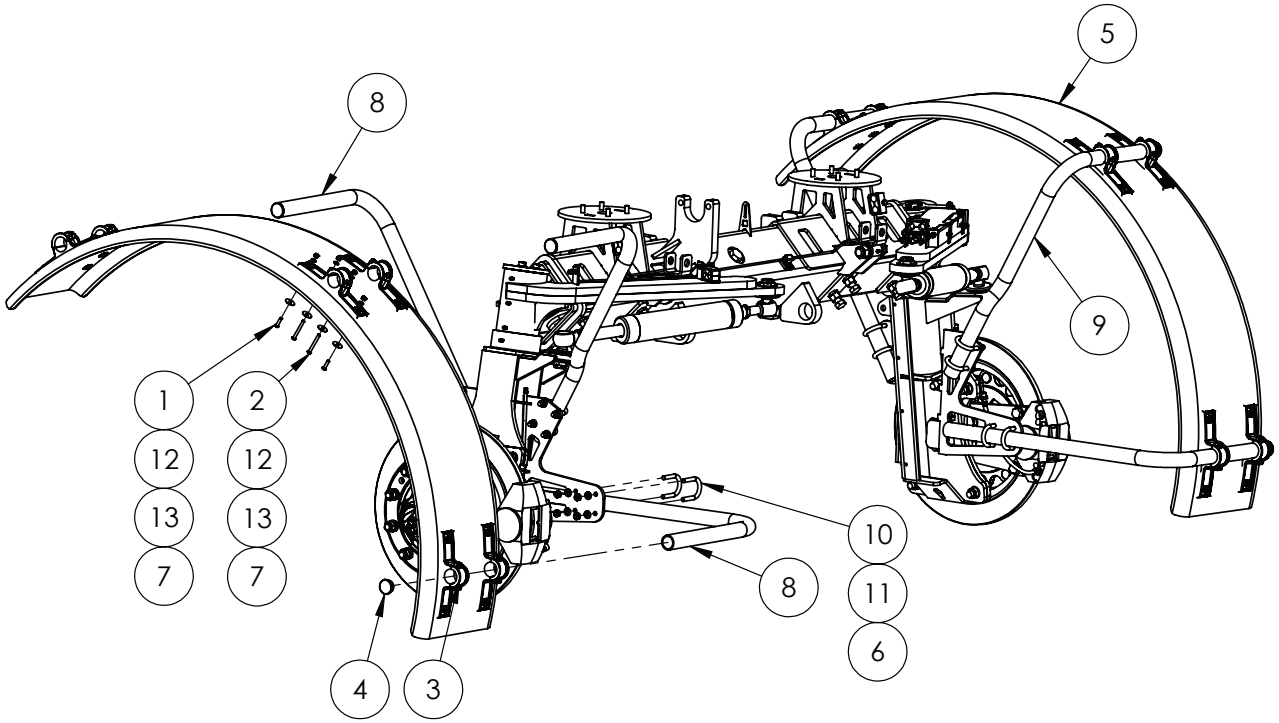

IF DESCRIPTION PREFIX IS ASSEMBLY DRAWING ONLY OR PRODUCTION DRAWING ONLY THE ITEM IS NOT FOR SALE			
ITEM	PART NUMBER	DESCRIPTION	QTY
1	GA5050680	BHCS M8 X 30 SS A2-70	24
2	GA5078889	BHCS M8 X 70 SS A2-70	24
3	GA5078888	BRACKET, MUDGUARD MOUNT ASSEMBLY, SUIT 48.5mm PIPE	12
4	GA5003925	END CAP, 45 mm ROUND, BLACK PLASTIC	6
5	GA5003323	MUDGUARD, BLACK PLASTIC, 400 WIDE X 1000 RADIUS	2
	GA5003825	MUDGUARD, BLACK PLASTIC, 500 WIDE X 1000 RADIUS	2
6	GA5012461	NUT M12 NYLOC ZP	24
7	GA5004917	NUT M8 NYLOC ZP	48
8	GA5078886	PIPE, MUD GUARD, FRONT 2WD WHEEL, FRONT, MID, & REAR, G4 S2	4
9	GA5078909	PIPE, MUDGUARD FRONT WHEEL MIDDLE PIPE, 3-4m, G4 S2	2
10	GA5071209	U BOLT M12 X 91L X 50W RT G/P	12
11	GA5000577	WASHER 12mm FLAT SS HD	24
12	GA5003645	WASHER 5/16" ID X 1 1/4" OD FLAT SS	48
13	GA5003651	WASHER 8mm FLAT SS	48
GA7800245 GOLDACRES		ASSEMBLY DRAWING ONLY. FRONT AXLE ASSY, 3000-4000mm WIDE, G4 S2, MY24	REV 00

Mudguard Axle Mount, Front & Rear, 4WD

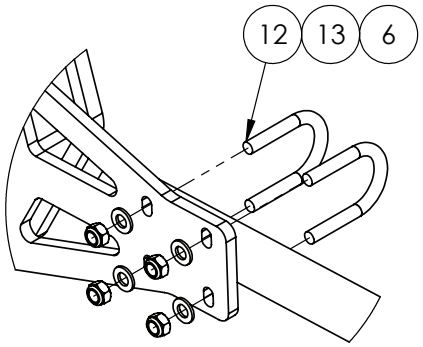

DETAIL A

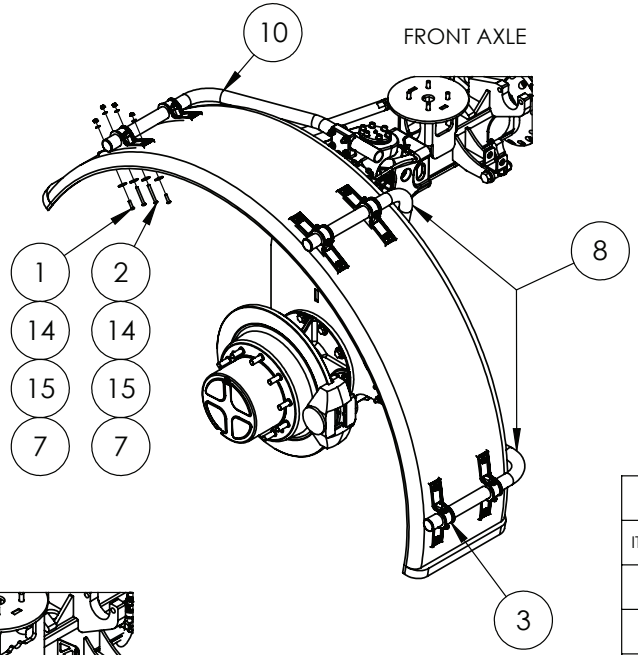

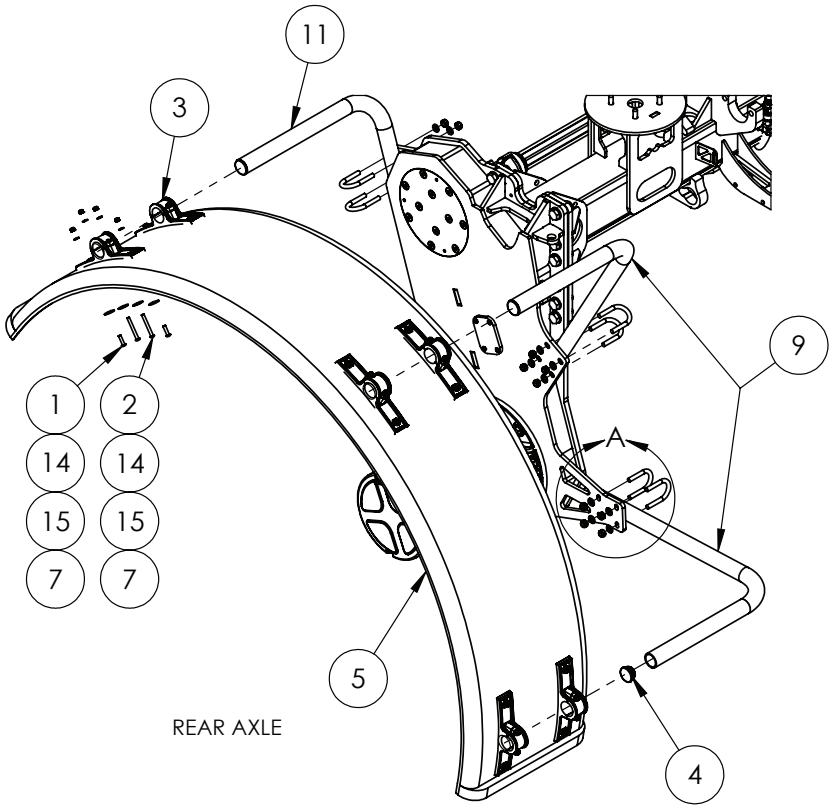

QUANTITIES PER SIDE

IF DESCRIPTION PREFIX IS ASSEMBLY DRAWING ONLY OR PRODUCTION DRAWING ONLY THE ITEM IS NOT FOR SALE			
ITEM	PART NUMBER	DESCRIPTION	QTY
1	GA5050680	BHCS M8 X 30 SS A2-70	24
2	GA5078889	BHCS M8 X 70 SS A2-70	24
3	GA5078888	BRACKET, MUDGUARD MOUNT ASSEMBLY, SUIT 48.5mm PIPE	12
4	GA5003925	END CAP, 45 mm ROUND, BLACK PLASTIC	6
5	GA5003825	MUDGUARD, BLACK PLASTIC, 500 WIDE X 1000 RADIUS	2
	GA5003323	MUDGUARD, BLACK PLASTIC, 400 WIDE X 1000 RADIUS	2
6	GA5012461	NUT M12 NYLOC ZP	24
7	GA5004917	NUT M8 NYLOC ZP	48
8	GA5078723	PIPE, MUD GUARD, FRONT WHEEL, MID & REAR PIPE, G4 S2	2
9	GA5078724	PIPE, MUD GUARD, REAR WHEEL, MID & REAR PIPE, G4 S2	2
10	GA5072330	PIPE, MUDGUARD FRONT UPPER, 4WD FRONT, MY16	1
11	GA5071681	PIPE, MUDGUARD REAR WHEEL 380/80R46 FRONT PIPE, G3 G4 SERIES	1
12	GA5071209	U BOLT M12 X 91L X 50W RT G/P	12
13	GA5000577	WASHER 12mm FLAT SS HD	24
14	GA5003645	WASHER 5/16" ID X 1 1/4" OD FLAT SS	48
15	GA5003651	WASHER 8mm FLAT SS	48
GA7800220 GOLDACRES		ASSEMBLY DRAWING ONLY, MUDGUARDS, AXLE MOUNT, G4 S2, MY24	REV 00

FRONT AXLE 2WD OPTION

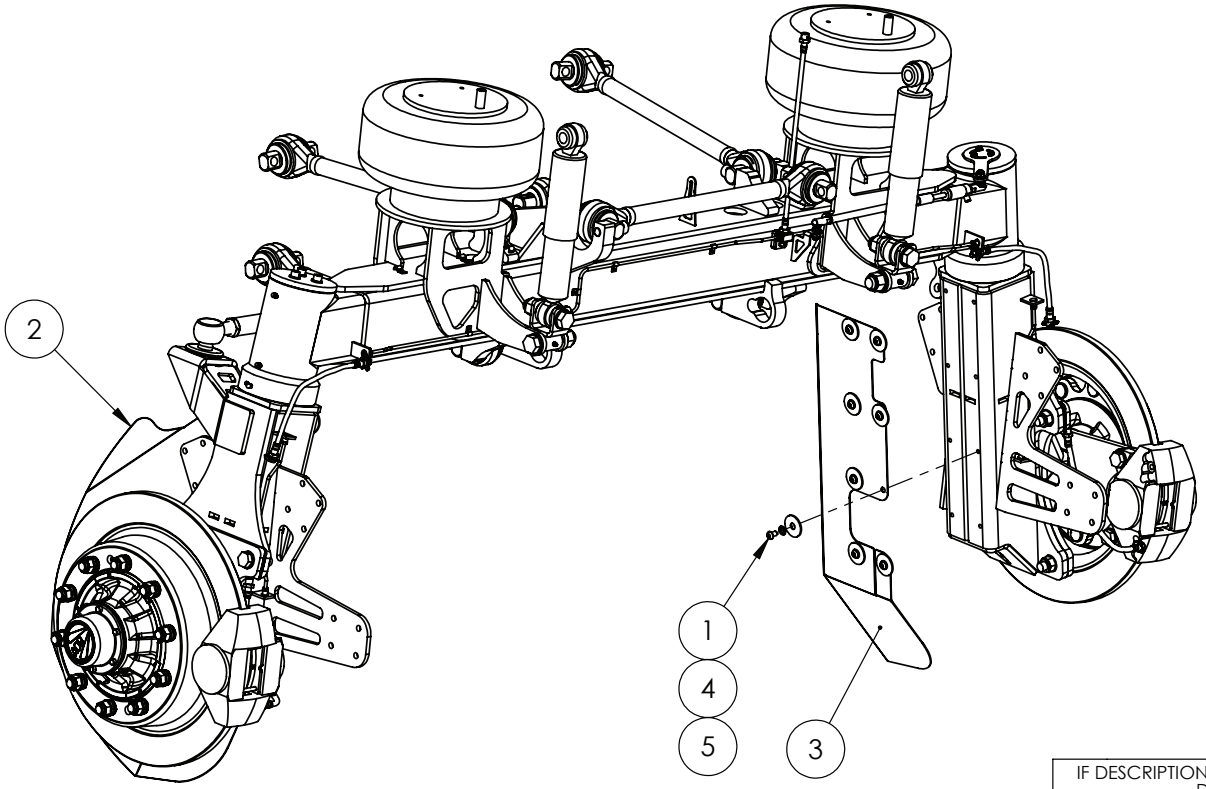

IF DESCRIPTION PREFIX IS ASSEMBLY DRAWING ONLY OR PRODUCTION DRAWING ONLY THE ITEM IS NOT FOR SALE			
ITEM	PART NUMBER	DESCRIPTION	QTY
1	GA0500003	BHCS M10 X 16 SS A2-70	16
2	GA4507515	CROP DEFLECTOR FRONT LH, G3 G4 SERIES 2014	1
3	GA4507510	CROP DEFLECTOR FRONT RH, G3 G4 SERIES 2014	1
4	GA5000117	WASHER 10mm FLAT SS HD	16
5	GA4535345	WASHER, 50 OD X 14.5 ID, SS	16
GA7800221 GOLDACRES		ASSEMBLY DRAWING ONLY, CROP DEFLECTORS, AXLE MOUNT, G4 S2, MY24	REV 01

Crop Deflectors, 4WD

FRONT AXLE 4WD OPTION

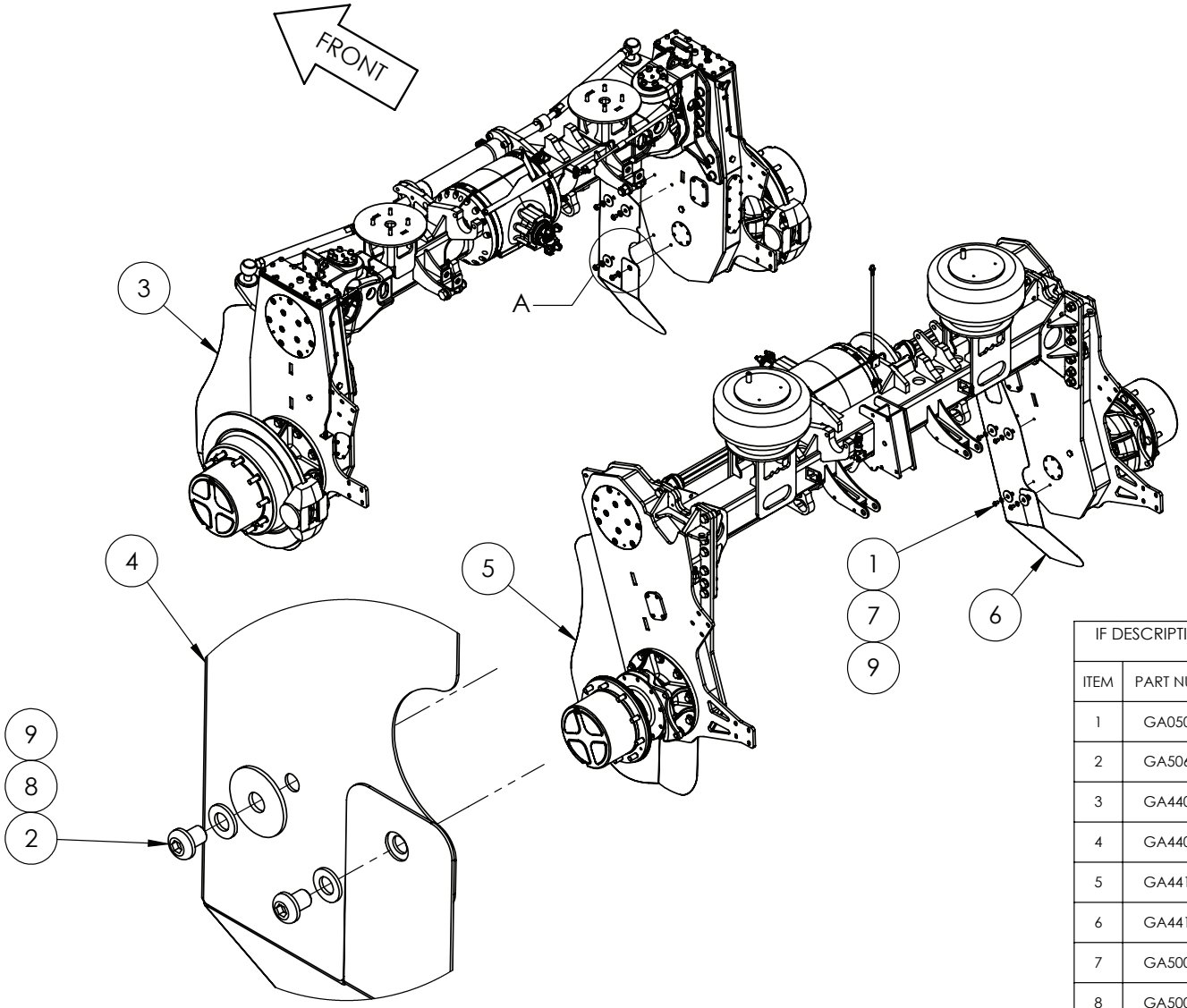

DETAIL A

IF DESCRIPTION PREFIX IS ASSEMBLY DRAWING ONLY OR PRODUCTION DRAWING ONLY THE ITEM IS NOT FOR SALE			
ITEM	PART NUMBER	DESCRIPTION	QTY
1	GA0500003	BHCS M10 X 16 SS A2-70	8
2	GA5069890	BHCS M12 X 16 GR12.9 ZP	8
3	GA4402630	PLATE, CROP DEFLECTOR, LH FRONT, 4WD, G3 G4	1
4	GA4402625	PLATE, CROP DEFLECTOR, RH FRONT, 4WD, G3 G4	1
5	GA4413635	PLATE, CROP DEFLECTOR, REAR DROP LEGS, LHS, G4 S2	1
6	GA4413640	PLATE, CROP DEFLECTOR, REAR DROP LEGS, RHS, G4 S2	1
7	GA5000117	WASHER 10mm FLAT SS HD	8
8	GA5000577	WASHER 12mm FLAT SS HD	8
9	GA4535345	WASHER, 50 OD X 14.5 ID, SS	15
GA7800221 GOLDACRES		ASSEMBLY DRAWING ONLY, CROP DEFLECTORS, AXLE MOUNT, G4 S2, MY24	REV 01

Crop Dividers - Front Axle, 2WD

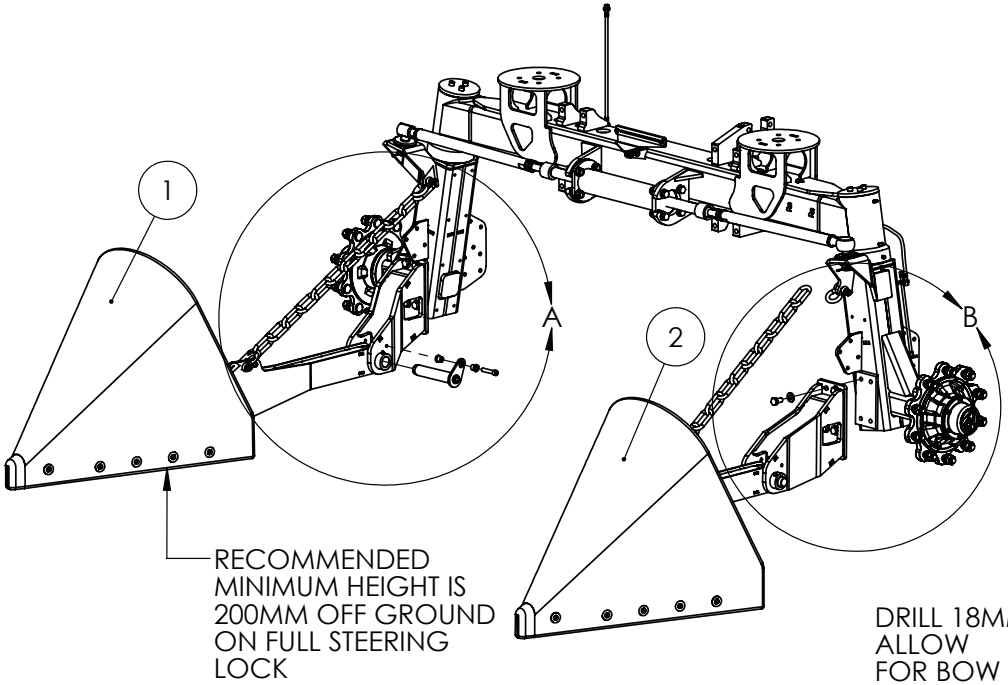

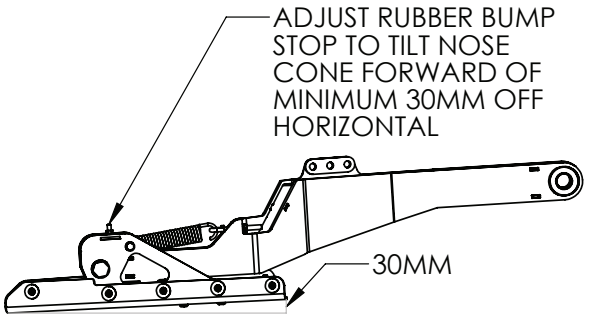

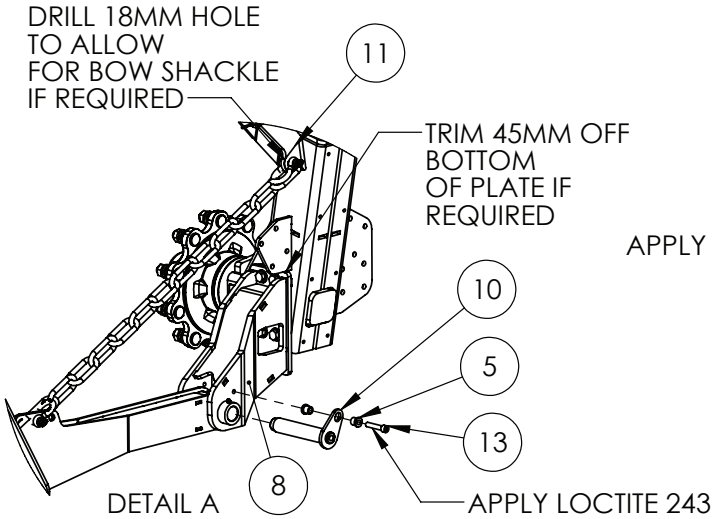

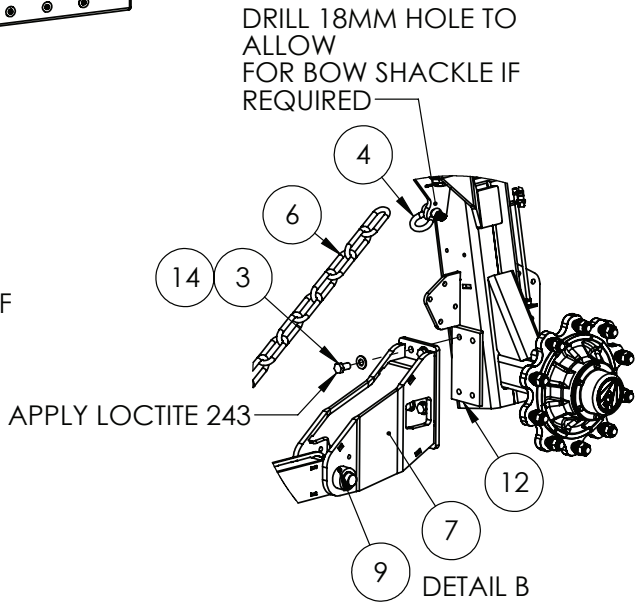

IF DESCRIPTION PREFIX IS ASSEMBLY DRAWING ONLY OR PRODUCTION DRAWING ONLY THE ITEM IS NOT FOR SALE			
ITEM	PART NUMBER	DESCRIPTION	QTY
1	GA4949705	ASSEMBLY, CROP DIVIDER, RIGHT, MY11 ONWARD	1
2	GA4949700	ASSEMBLY, NOSE CONE, CROP DIVIDER, LEFT, MY11 ONWARD	1
3	GA5000913	BOLT M16 X 30 GR8.8 ZP	8
4	GA5075230	BOW SHACKLE 13mm WLL 3.25T BLACK	4
5	MACH0152	BUSH WITH SHOULDER, 12.3 ID X 25 OD X 21 LONG, SUIT PARALIFT PIN BOLTS	4
6	GA4909235	CHAIN, LONG LINK, 13mm, GR 80, PAINT BLACK, CUT TO LENGTH GA5065030	2
7	GA4603955	CROP DIVIDER MOUNT, 2WD FRONT LEFT, G4	1
8	GA4603960	CROP DIVIDER MOUNT, 2WD FRONT RIGHT, G4	1
9	GA5012203	GREASE NIPPLE, SHORT, 1/4 UNF, MACH0207	4
10	GA4603500	PIN, CROP DIVIDER, ARM PIVOT WITH LOCKING PLATE, 1.5" OD, MY21	2
11	GA4412245	PLATE, CHAIN BRACKET, 2WD FRONT 2-3m, MY18	2
12	GA4402635	PLATE, CROP DIVIDER MOUNT, DROPLEG, G4	2
13	GA0500020	SHCS M12 X 60 GR12.9 ZP	2
14	GA5001043	WASHER 16mm FLAT SS HD	8
GA1100074 GOLDACRES		SALES KIT, CROP DIVIDERS, FRONT, 2WD, G4	REV 00

Crop Dividers - Front Axle, 4WD

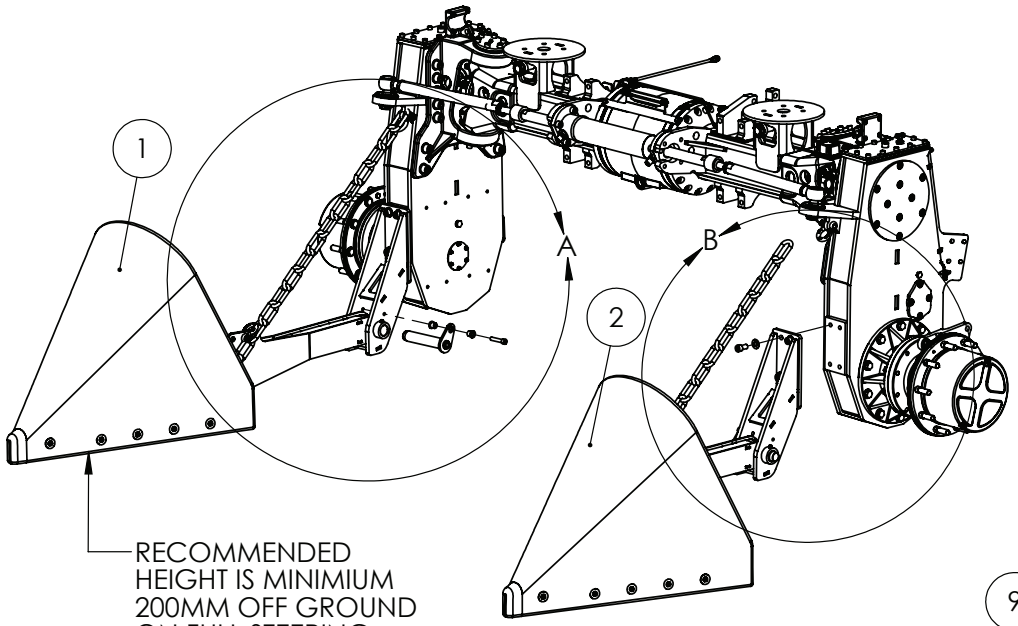

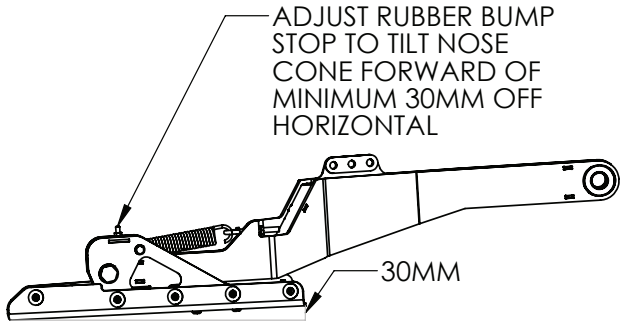

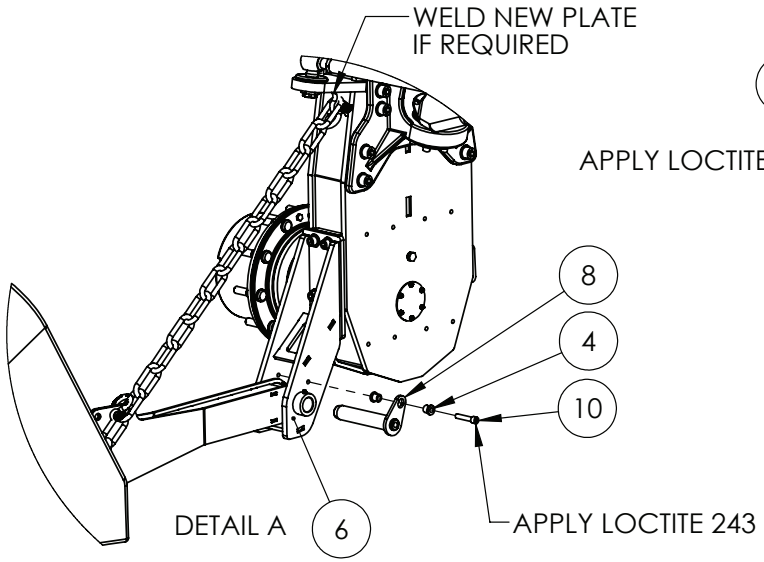

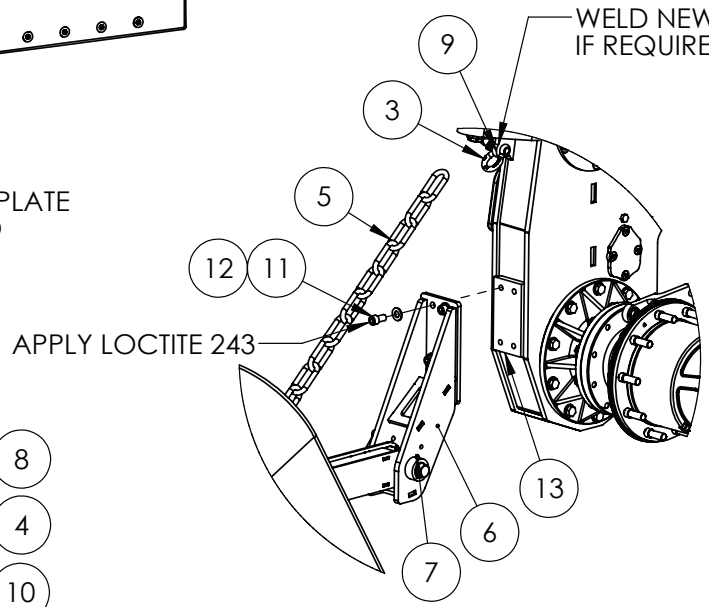

IF DESCRIPTION PREFIX IS ASSEMBLY DRAWING ONLY OR PRODUCTION DRAWING ONLY THE ITEM IS NOT FOR SALE			
ITEM	PART NUMBER	DESCRIPTION	QTY
1	GA4949705	ASSEMBLY, CROP DIVIDER, RIGHT, MY11 ONWARD	1
2	GA4949700	ASSEMBLY, NOSE CONE, CROP DIVIDER, LEFT, MY11 ONWARD	1
3	GA5075230	BOW SHACKLE 13mm WLL 3.25T BLACK	4
4	MACH0152	BUSH WITH SHOULDER, 12.3 ID X 25 OD X 21 LONG, SUIT PARALIFT PIN BOLTS	4
5	GA4909235	CHAIN, LONG LINK, 13mm, GR 80, PAINT BLACK, CUT TO LENGTH GA5065030	2
6	GA4602560	CROP DIVIDER MOUNT, FRONT 4WD G4	2
7	GA5050450	GREASE NIPPLE, 6mm	4
8	GA4603500	PIN, CROP DIVIDER, ARM PIVOT WITH LOCKING PLATE, 1.5" OD, MY21	2
9	GA4504665	PLATE, TIE ROD MOUNT GUSSET. 4WD FRONT DROPLEG, MY16	2
10	GA0500020	SHCS M12 X 60 GR12.9 ZP	2
11	GA5000915	SHCS M16 X 30 GR12.9 ZP	8
12	GA5001043	WASHER 16mm FLAT SS HD	8
13	GA4402635	PLATE, CROP DIVIDER MOUNT, DROPLEG, G4	2
GA1100072 GOLDACRES		SALES KIT, CROP DIVIDER, FRONT, 4WD, G4, MY17 ON	REV

Crop Dividers - Rear Axle

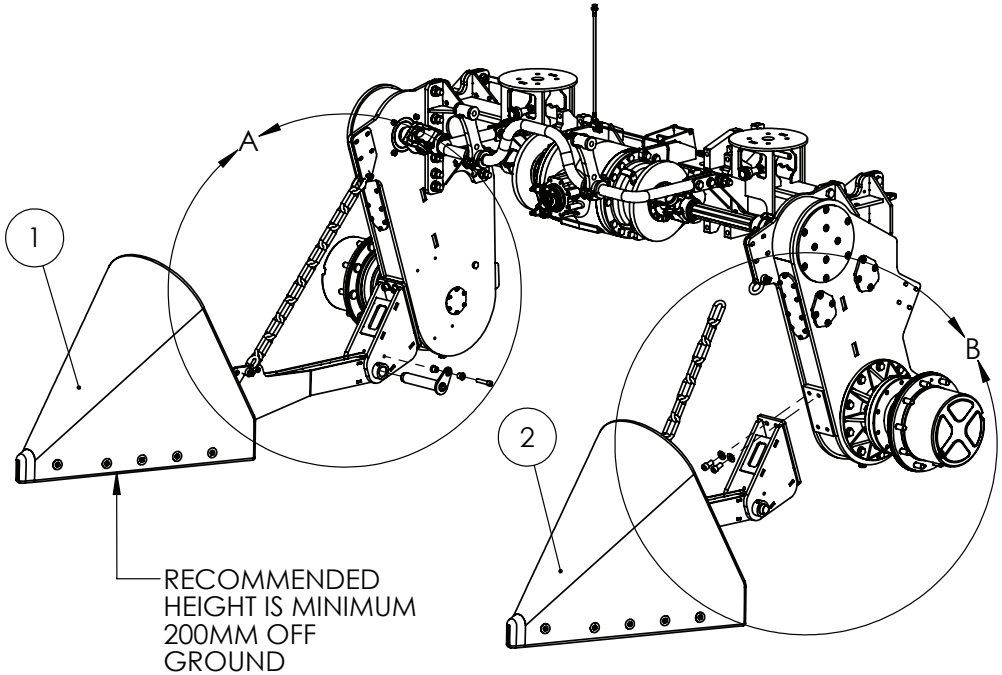

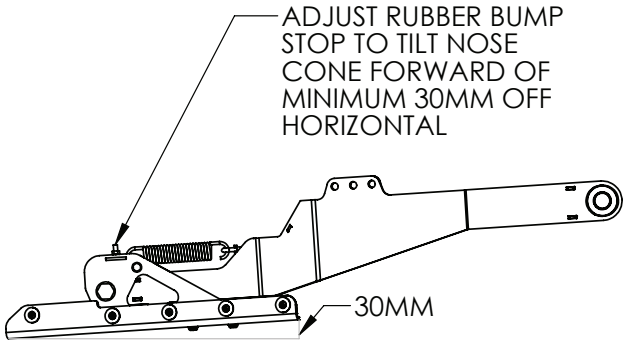

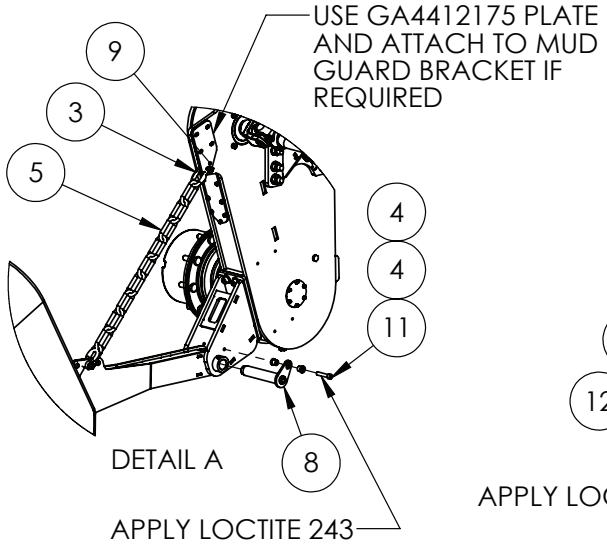

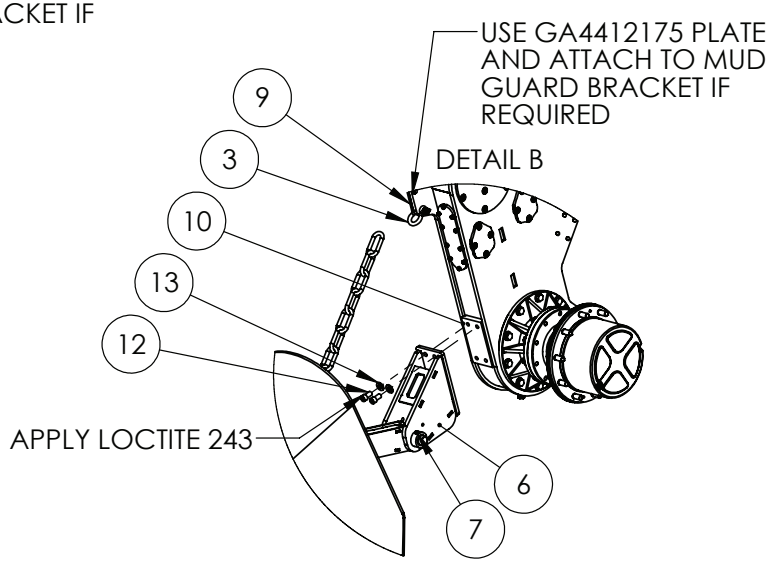

IF DESCRIPTION PREFIX IS ASSEMBLY DRAWING ONLY OR PRODUCTION DRAWING ONLY THE ITEM IS NOT FOR SALE			
ITEM	PART NUMBER	DESCRIPTION	QTY
1	GA4949705	ASSEMBLY, CROP DIVIDER, RIGHT, MY11 ONWARD	1
2	GA4949700	ASSEMBLY, NOSE CONE, CROP DIVIDER, LEFT, MY11 ONWARD	1
3	GA5075230	BOW SHACKLE 13mm WLL 3.25T BLACK	4
4	MACH0152	BUSH WITH SHOULDER, 12.3 ID X 25 OD X 21 LONG, SUIT PARALIFT PIN BOLTS	4
5	GA4909235	CHAIN, LONG LINK, 13mm, GR 80, PAINT BLACK, CUT TO LENGTH	2
6	GA4603935	CROP DIVIDER MOUNT, REAR 4WD + 2WD, G4	2
7	GA5050450	GREASE NIPPLE, 6mm	4
8	GA4603500	PIN, CROP DIVIDER, ARM PIVOT WITH LOCKING PLATE, 1.5" OD, MY21	2
9	GA4412175	PLATE, CHAIN HANGER MOUNT, CROP DIVIDERS, G4 REAR	2
10	GA4402635	PLATE, CROP DIVIDER MOUNT, DROPLEG, G4	2
11	GA0500020	SHCS M12 X 60 GR12.9 ZP	2
12	GA5000915	SHCS M16 X 30 GR12.9 ZP	8
13	GA5001043	WASHER 16mm FLAT SS HD	8
GA1100073 GOLDACRES		SALES KIT, CROP DIVIDERS, REAR, 2WD & 4WD, G4 SERIES 2, ON	REV 00

Crop Divider, Nose Cone Assembly

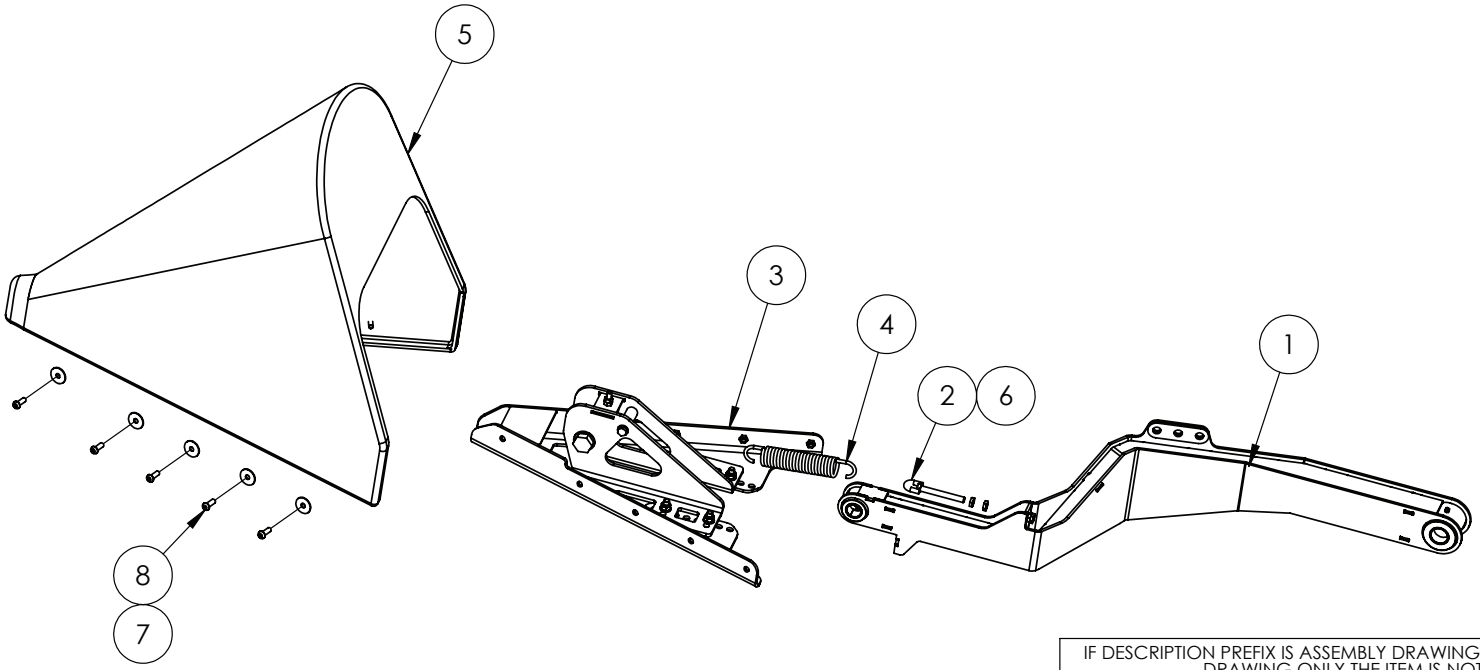

IF DESCRIPTION PREFIX IS ASSEMBLY DRAWING ONLY OR PRODUCTION DRAWING ONLY THE ITEM IS NOT FOR SALE			
ITEM	PART NUMBER	DESCRIPTION	QTY
1	GA4602565	ARM ASSEMBLY, LEFT, CROP DIVIDER, MY11 ONWARD	1
2	GA5075150	EYE BOLT 12mm X 100mm SHORT	1
3	GA4949675	NOSE CONE FRAME, CROP DIVIDER	1
4	GA5006345	SPRING SMALL BOOM 120H	1
5	GA5073735	NOSE CONE, CROP DIVIDER, MY19	1
6	GA5071280	NUT, M12 HALF LOCK NUT, ZP	4
7	GA5002595	WASHER, 3/8" X 1 1/2" OD, FLAT SS	10
8	GA5048120	BHCS M10 X 30 SS A2-70	10
GA4949700 GOLDACRES		ASSEMBLY, NOSE CONE, CROP DIVIDER, LEFT, MY11 ONWARD	REV 02

CROP DIVIDER, NOSE CONE ASSEMBLY, CROP CRUISER, MY11 0NWARD

Crop Divider, Nose Cone Frame Assembly

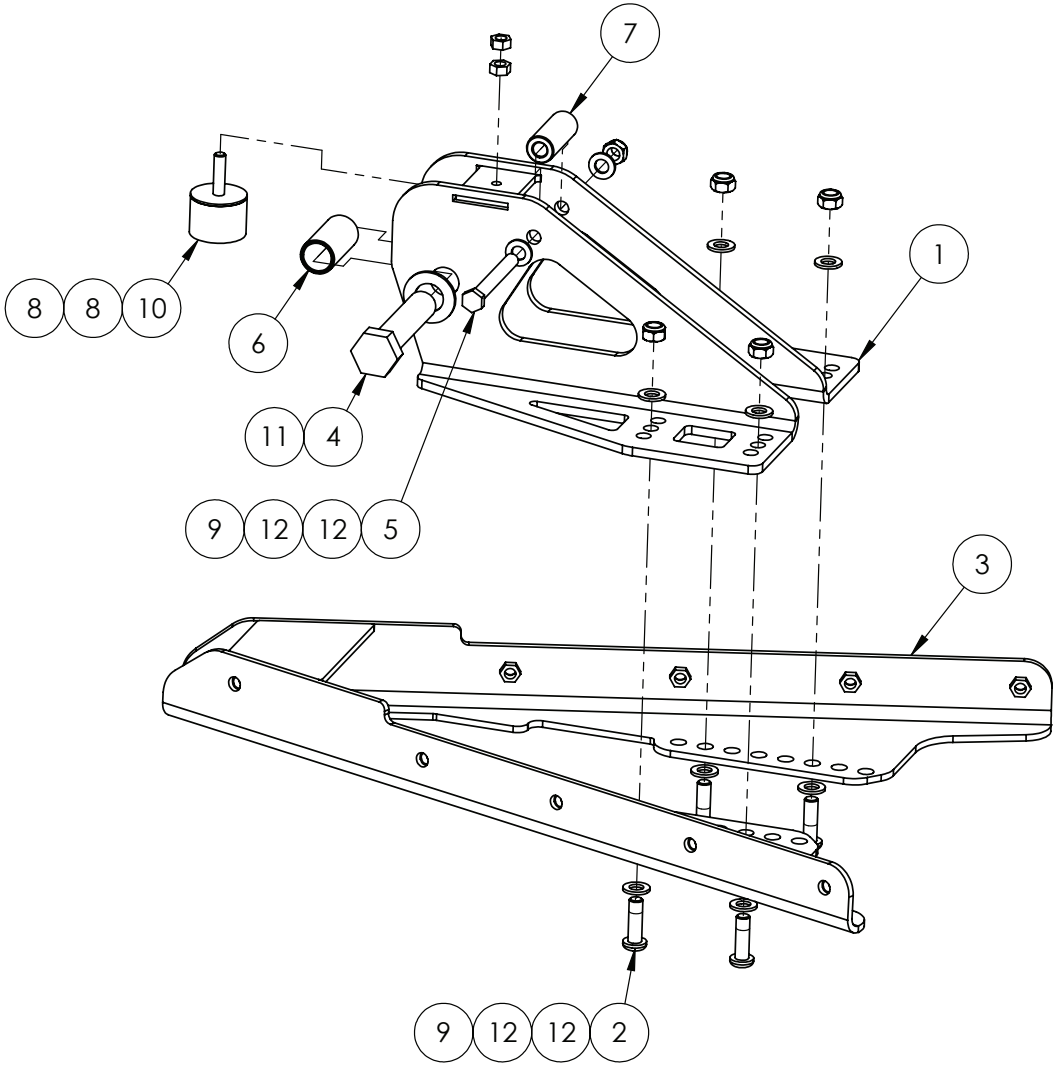

IF DESCRIPTION PREFIX IS ASSEMBLY DRAWING ONLY OR PRODUCTION DRAWING ONLY THE ITEM IS NOT FOR SALE			
ITEM	PART NUMBER	DESCRIPTION	QTY
1	GA4602530	ADJUSTER, CROP DIVIDER, MY19	1
2	GA0500079	BHCS M12 X 40 GR12.9 ZP	4
3	GA4602525	BASE, CROP DIVIDER, MY11 ONWARD	1
4	GA5006149	BOLT 1 UNC X 4 1/2 GR8 ZP	1
5	GA5000259	BOLT M12 X 100 GR8.8 ZP	1
6	GA4551350	BUSH CRUSH TUBE, CROP DIVIDER, MY19	1
7	GA4551355	BUSH, SPRING END, CROP DIVIDER, MY19	1
8	GA5012459	NUT M10 HEX ZP	2
9	GA5012461	NUT M12 NYLOC ZP	5
10	GA5052815	RUBBER STOPPER, DIAMETER 50 X 35 LONG, WITH M10 X 35 STUD	1
11	GA5001893	WASHER 1 X 1 7/8 X 14G	1
12	GA5000577	WASHER 12mm FLAT SS HD	10
GA4949675 GOLDACRES		NOSE CONE FRAME, CROP DIVIDER	REV 04

14 - Induction Hopper

Induction Hopper Assembly, Up to S/N 204019

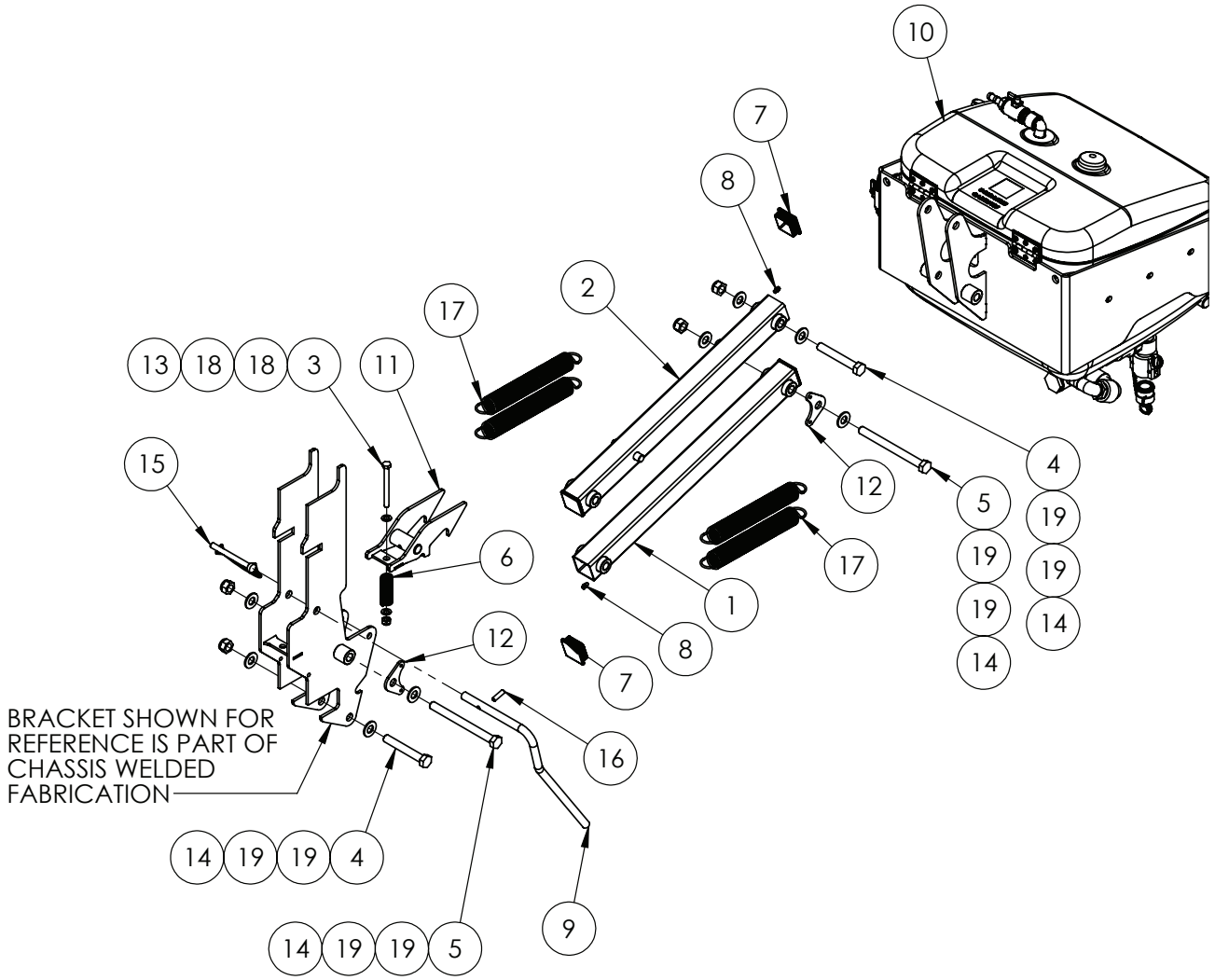

IF DESCRIPTION PREFIX IS ASSEMBLY DRAWING ONLY OR PRODUCTION DRAWING ONLY THE ITEM IS NOT FOR SALE			
ITEM	PART NUMBER	DESCRIPTION	QTY
1	GA4602315	ARM, HOPPER, LOWER, BLACK, G6 MY20	1
2	GA4602320	ARM, HOPPER, UPPER, BLACK, G6 MY20	1
3	GA5006091	BOLT M10 X 100 GR8.8 ZP	1
4	GA5000855	BOLT M16 X 110 GR8.8 ZP	2
5	GA5000879	BOLT M16 X 180 GR8.8 ZP	2
6	GA5007329	COMPRESSION SPRING GOLD	1
7	GA5003783	END CAP, PLASTIC, BLACK, INSERT, RHS. 50 X 50, 0.8 - 2.5mm WALL	4
8	GA5012203	GREASE NIPPLE, SHORT, 1/4 UNF, MACH0207	4
9	GA4602330	HANDLE, LATCH, HOPPER, BLACK, G6 MY20	1
10	GA4949280	HOPPER, TANK, ASSEMBLY, G6, MY20	1
11	GA4602325	LATCH, HOPPER, BLACK, G6 MY20	1
12	GA4522294	MOUNTING PLATE, DOUBLE INDUCTION HOPPER SPRING	4
13	GA5000141	NUT M10 NYLOC ZP	1
14	GA5001029	NUT M16 NYLOC ZP	4
15	GA5048380	PIN SHAFT LOCKING 11mm	1
16	GA5075130	ROLL PIN M8 X 30mm COATED	1
17	GA5007073	SPRING, TENSION, 38.2 OD X 284.3 LONG X 3.55mm, INDUCTION HOPPER	4
18	GA5000117	WASHER 10mm FLAT SS HD	2
19	GA5001043	WASHER 16mm FLAT SS HD	8
GA4949720 GOLDACRES		HOPPER ASSEMBLY, G6 MY20	REV 00.C

Induction Hopper Assembly, From S/N 204020

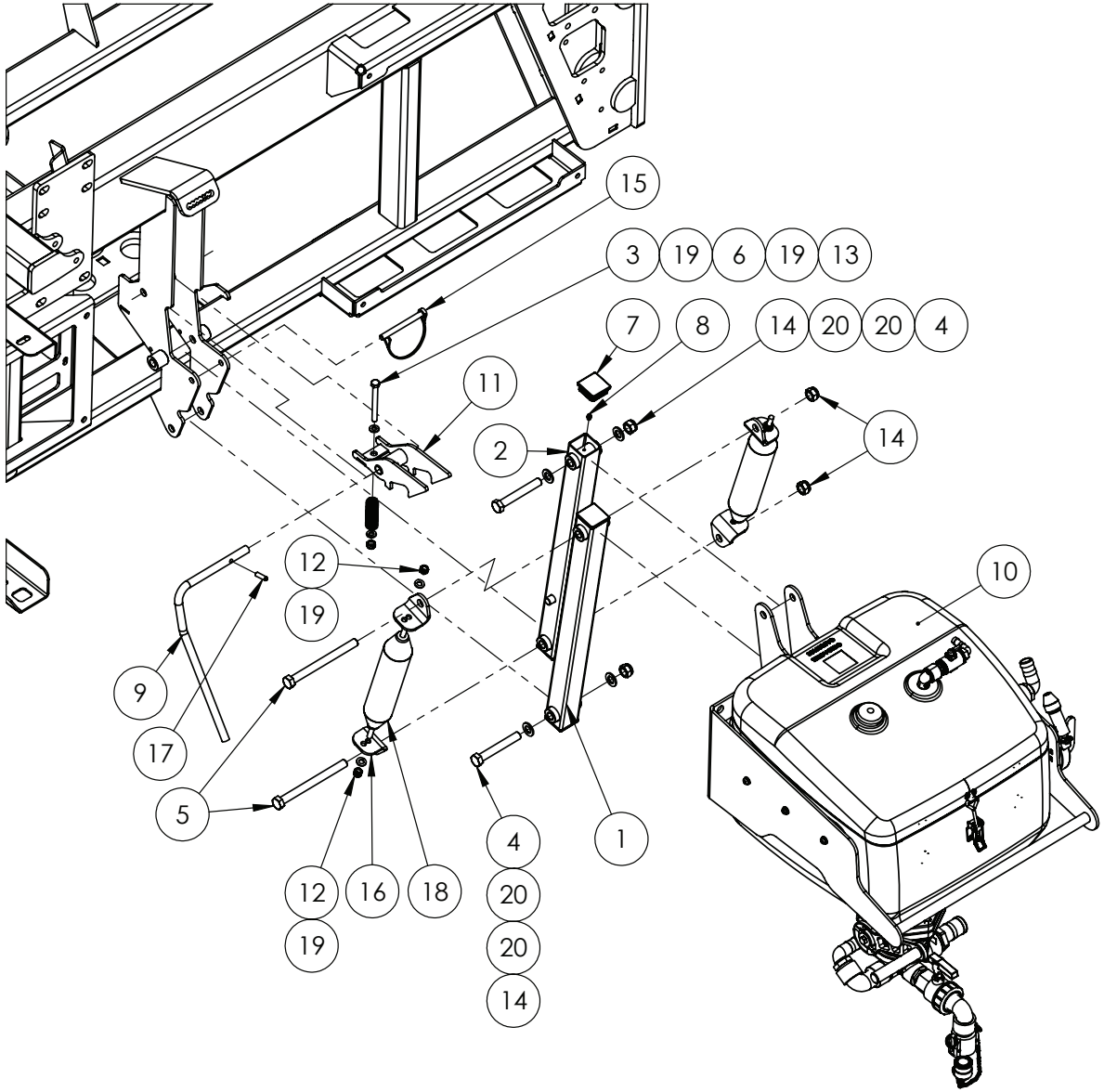

IF DESCRIPTION PREFIX IS ASSEMBLY DRAWING ONLY OR PRODUCTION DRAWING ONLY THE ITEM IS NOT FOR SALE			
ITEM	PART NUMBER	DESCRIPTION	QTY
1	GA4602315	ARM, HOPPER, LOWER, BLACK, G6 MY20	1
2	GA4602320	ARM, HOPPER, UPPER, BLACK, G6 MY20	1
3	GA5006091	BOLT M10 X 100 GR8.8 ZP	1
4	GA5000855	BOLT M16 X 110 GR8.8 ZP	2
5	GA5000879	BOLT M16 X 180 GR8.8 ZP	2
6	GA5007329	COMPRESSION SPRING GOLD	1
7	GA5003783	END CAP, PLASTIC, BLACK, INSERT, RHS. 50 X 50, 0.8 - 2.5mm WALL	4
8	GA5012203	GREASE NIPPLE, SHORT, 1/4 UNF, MACH0207	4
9	GA4602330	HANDLE, LATCH, HOPPER, BLACK, G6 MY20	1
10	GA6101681	HOPPER, TANK, ASSEMBLY, G4, MY24	1
11	GA4602325	LATCH, HOPPER, BLACK, G6 MY20	1
12	GA5051445	NUT M10 NYLOC SS	4
13	GA5000141	NUT M10 NYLOC ZP	1
14	GA5001029	NUT M16 NYLOC ZP	4
15	GA5048380	PIN SHAFT LOCKING 11mm	1
16	GA4000037	PLATE, SPRING MOUNT, HOPPER	4
17	GA5075130	ROLL PIN M8 X 30mm COATED	1
18	GA5025938	SPRING, TENSION, 6.3mm WIRE X 60 OD X 285 LONG, INDUCTION HOPPER	2
19	GA5000117	WASHER M10 FLAT SS HD	6
20	GA5001043	WASHER M16 FLAT SS HD	4
GA7800269 GOLDACRES	ASSEMBLY DRAWING ONLY, HOPPER, CHASSIS MOUNT G4 S2, MY24		REV 00.A

Induction Hopper Tank Assembly

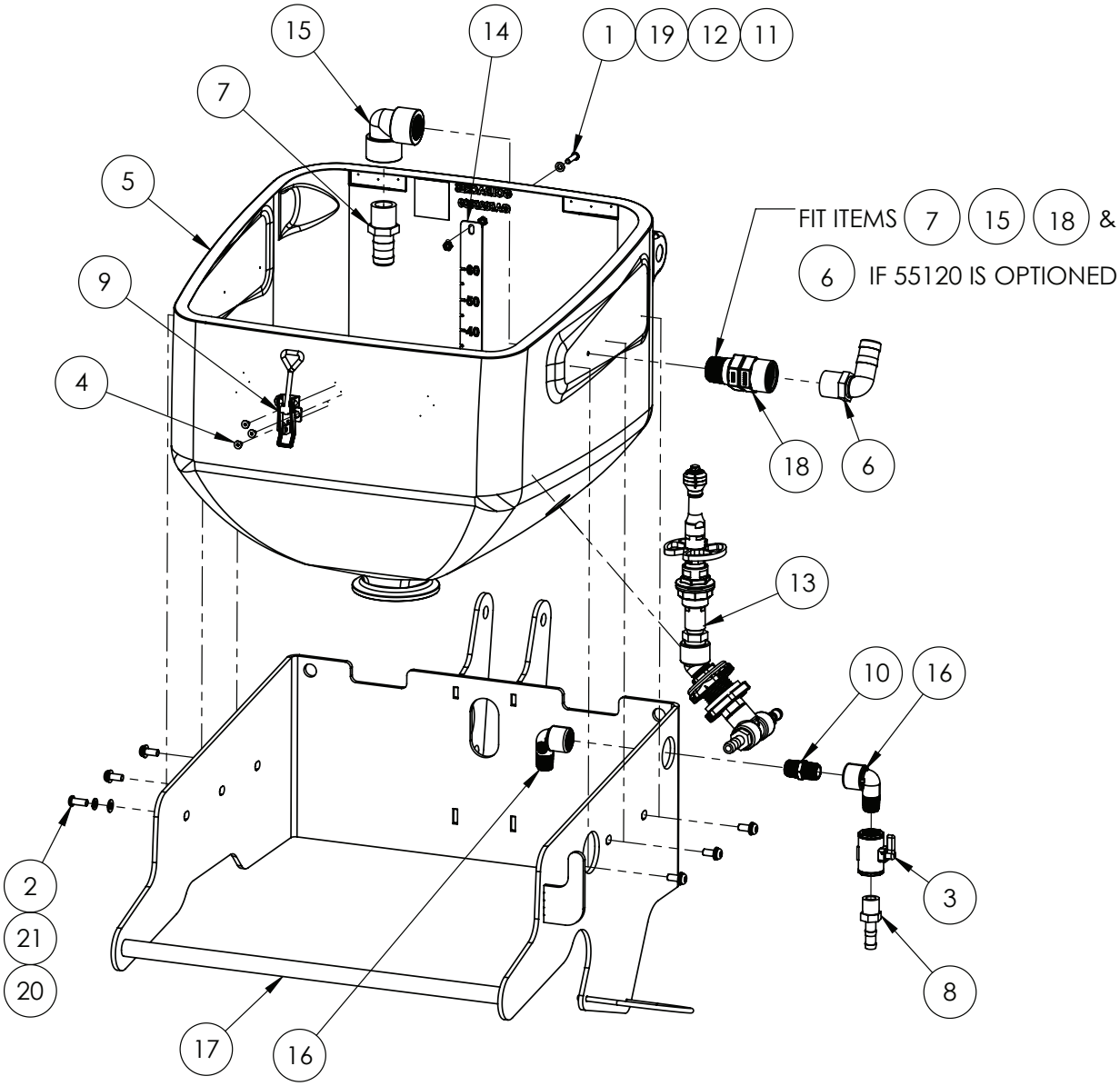

IF DESCRIPTION PREFIX IS ASSEMBLY DRAWING ONLY OR PRODUCTION DRAWING ONLY THE ITEM IS NOT FOR SALE			
ITEM	PART NUMBER	DESCRIPTION	QTY
1	GA5004067	BHCS M6 X 25 SS A2-70	1
2	GA0500102	BHCS M8 X 20 SS A2-70	6
3	GA2000163	BALL VALVE, MICRO, 2 WAY, 1/2" NPT FEMALE THREADS, LV050V, BANJO	1
4	GA0500101	CSCS M5 X 10 SS A2-70	3
5	GA5025130	HOPPER, BODY, G6, MY20	1
6	GA5077723	HOSE BARB, ELBOW, 90 DEGREE, 1" MALE X 1" HOSE, BANJO	1
7	GA5077718	HOSE BARB, STRAIGHT, 1 MALE THREAD X 1 HOSE, BANJO	1
8	GA5077702	HOSE BARB, STRAIGHT, 1/2 MALE THREAD X 1/2 HOSE, BANJO, HB050	1
9	GA5007071	LATCH, INDUCTION HOPPER LID, STAINLESS STEEL	1
10	GA5077911	NIPPLE, SHORT, 1/2 MALE THREAD X 1/2 MALE THREAD, BANJO. NIP050-SH	1
11	GA5004429	NUT M6 NYLOC SS	1
12	GA5049030	NUT M6 SS	1
13	GA4949305	PRODUCTION DRAWING ONLY. DRUM RINSE NOZZLE, HOPPER, G6 MY20	1
14	GA4408895	Scale, Hopper, 60L Series 2	1
15	GA5077655	STREET ELBOW, 90 DEGREE, 1 FEMALE THREAD X 1 FEMALE THREAD, BANJO, EL100-90	1
16	GA5078133	STREET ELBOW, 90 DEGREE, 1/2 FEMALE THREAD X 1/2 MALE THREAD, BANJO	2
17	GA4602246	SUPPORT, HOPPER, G4, MY24	1
18	GA2000461	SWIVEL, GRP, 1" NPT MALE-FEMALE, BANJO, SW100	1
19	GA5004437	WASHER 6mm FLAT SS	1
20	GA5003643	WASHER 8mm FLAT SS HD	6
21	GA5004919	WASHER 8mm SPRING SS	6
GA6101681 GOLDACRES	HOPPER, TANK, ASSEMBLY, SP		REV 00.C

BUILD OPTION - G4 S2:
55120 - CHEMICAL TRANSFER PUMP, (SOTERA) TANK OR HOPPER FILL
BUILD OPTION - S3:
55120 - DEFAULT - CHEMICAL TRANSFER PUMP, (SOTERA) TANK OR HOPPER FILL

Drum Rinse Nozzle Assembly

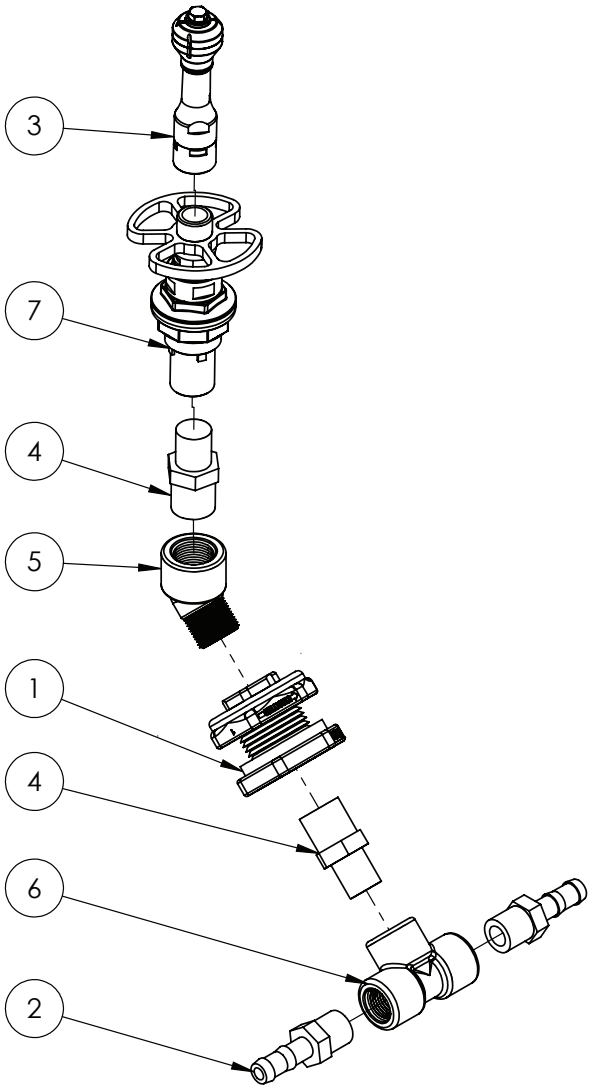

IF DESCRIPTION PREFIX IS ASSEMBLY DRAWING ONLY OR PRODUCTION DRAWING ONLY THE ITEM IS NOT FOR SALE			
ITEM	PART NUMBER	DESCRIPTION	QTY
1	GA2000162	BULKHEAD FITTING, 3/4" FEMAL THREADS, TF075, BANGO	1
2	GA5077702	HOSE BARB, STRAIGHT, 1/2 MALE THREAD X 1/2 HOSE, BANJO, HB050	2
3	GA5077063	NOZZLE, DRUM & CONTAINER ROTATING RINSING JET, ARAG, 510111	1
4	GA5078087	REDUCING NIPPLE 3/4" X 1/2"	2
5	GA5078134	STREET ELBOW, 45 DEGREE, 3/4 MALE THREAD X 3/4 FEMALE THREAD, BANJO	1
6	GA5078149	TEE, THREADED, 1/2 FEMALE, BANJO	1
7	GA5077062	VALVE, DRUM & CONTAINER RINSING NOZZLE, ARAG, 510101	1
GA4949305 GOLDACRES		PRODUCTION DRAWING ONLY. DRUM RINSE NOZZLE, HOPPER, G6 MY20	REV 00

Induction Hopper Lid Assembly

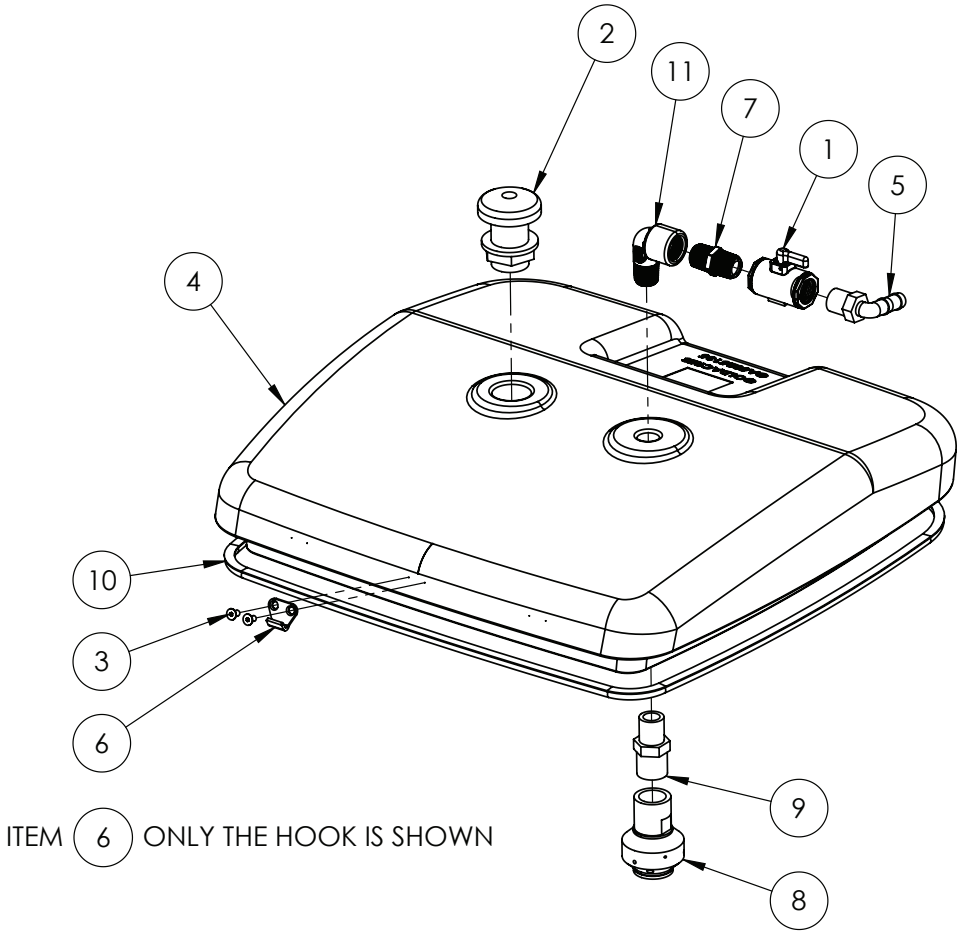

IF DESCRIPTION PREFIX IS ASSEMBLY DRAWING ONLY OR PRODUCTION DRAWING ONLY THE ITEM IS NOT FOR SALE			
ITEM	PART NUMBER	DESCRIPTION	QTY
1	GA2000163	BALL VALVE, MICRO, 2 WAY, 1/2" NPT FEMALE THREADS, LV050V, BANJO	1
2	GA5077045	BREATHER VALVE, LABYRINTH TYPE, 1" MALE THREAD, ARAG	1
3	GA0500101	CSCS M5 X 10 SS A2-70	2
4	GA5025135	HOPPER, LID,G6, MY20	1
5	GA5077708	HOSE BARB, ELBOW, 90 DEGREE, 1/2 MALE THREAD X 1/2 HOSE, BANJO, HB050-90	1
6	GA5007071	LATCH, INDUCTION HOPPER LID, STAINLESS STEEL	1
7	GA5077911	NIPPLE, SHORT, 1/2 MALE THREAD X 1/2 MALE THREAD, BANJO. NIP050-SH	1
8	GA5077336	NOZZLE, TANK RINSING, 3/4 BSPT FEMALE INLET, TEEJET	1
9	GA5078087	REDUCING NIPPLE, 3/4 MALE THREAD X 1/2 MALE THREAD, BANJO	1
10	GA5078553	SEAL, BULB, SELF ADHESIVE, 8.3mm X 9mm, CLARK RUBBER, SKU: 38954	1.8
11	GA5078133	STREET ELBOW, 90 DEGREE, 1/2 FEMALE THREAD X 1/2 MALE THREAD, BANJO	1
GA6101681 GOLDACRES		HOPPER, TANK, ASSEMBLY, SP	REV 00.C

Induction Hopper Bottom & Lid Hinges

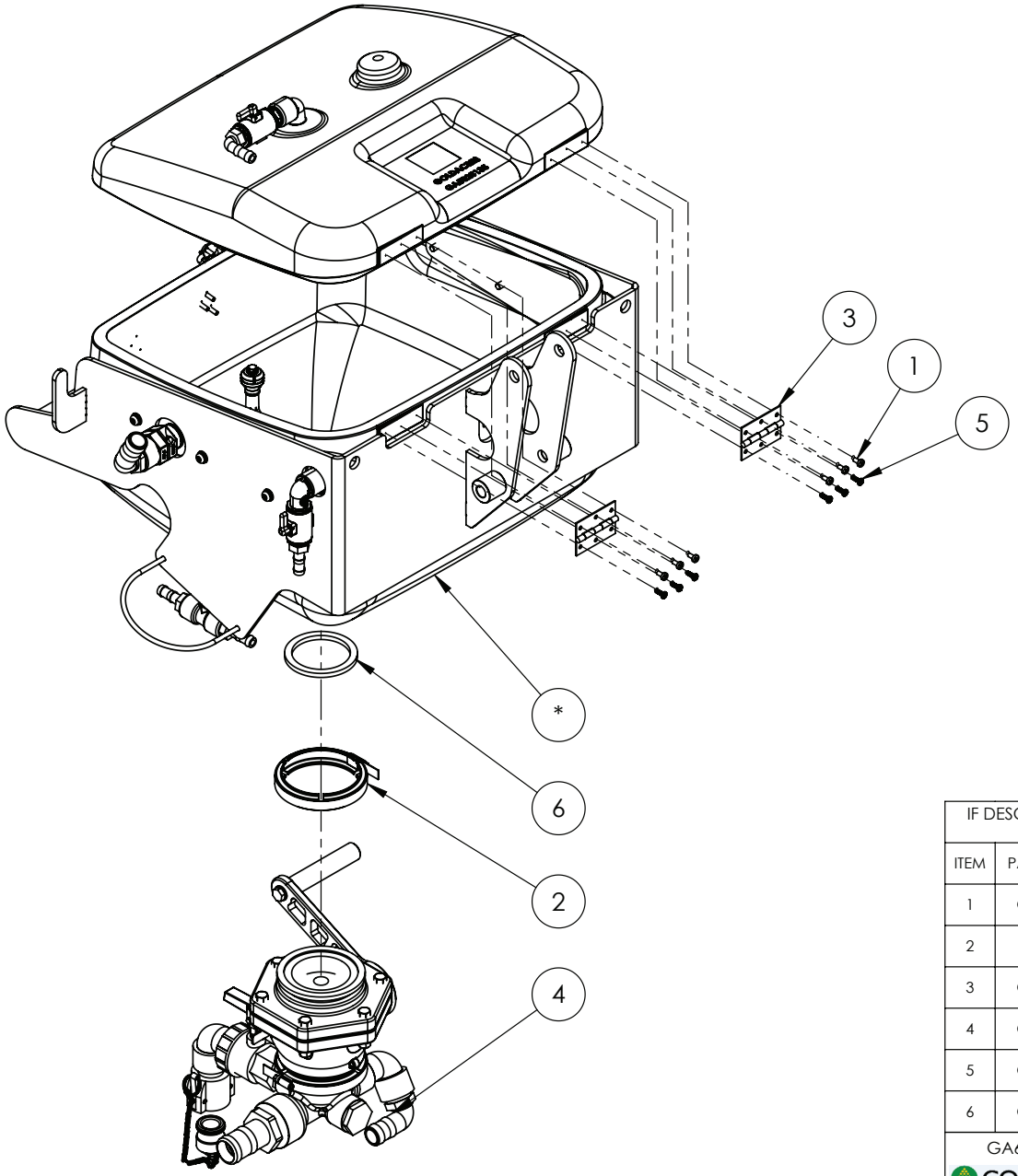

IF DESCRIPTION PREFIX IS ASSEMBLY DRAWING ONLY OR PRODUCTION DRAWING ONLY THE ITEM IS NOT FOR SALE			
ITEM	PART NUMBER	DESCRIPTION	QTY
1	GA0500099	BOLT PAN HEAD M5	6
2	FC300	CLAMP, 3" FLANGE MANIFOLD, BANJO	1
3	GA5006661	HINGE 76mm BUTT HINGE SS	2
4	GA4949285	PRODUCTION DRAWING ONLY. HOPPER BOTTOM, ASSEMBLY, G6, MY20	1
5	GA5014817	SCREW PAN HEAD 10G X 5/8 SS	6
6	GA5076723	SEAL, EPDM, SUIT 3 FLANGE FITTING, BANJO	1
GA6101681 GOLDACRES	HOPPER, TANK, ASSEMBLY, SP		REV 00.C

Induction Hopper Bottom, Ball Valve Assembly

REPLACEMENT PARTS			
ITEM	PART NUMBER	DESCRIPTION	QTY
A	GA2000301	REPAIR KIT, BALL VALVE 3", SUIT GA2000119, BANJO, VS35200	-

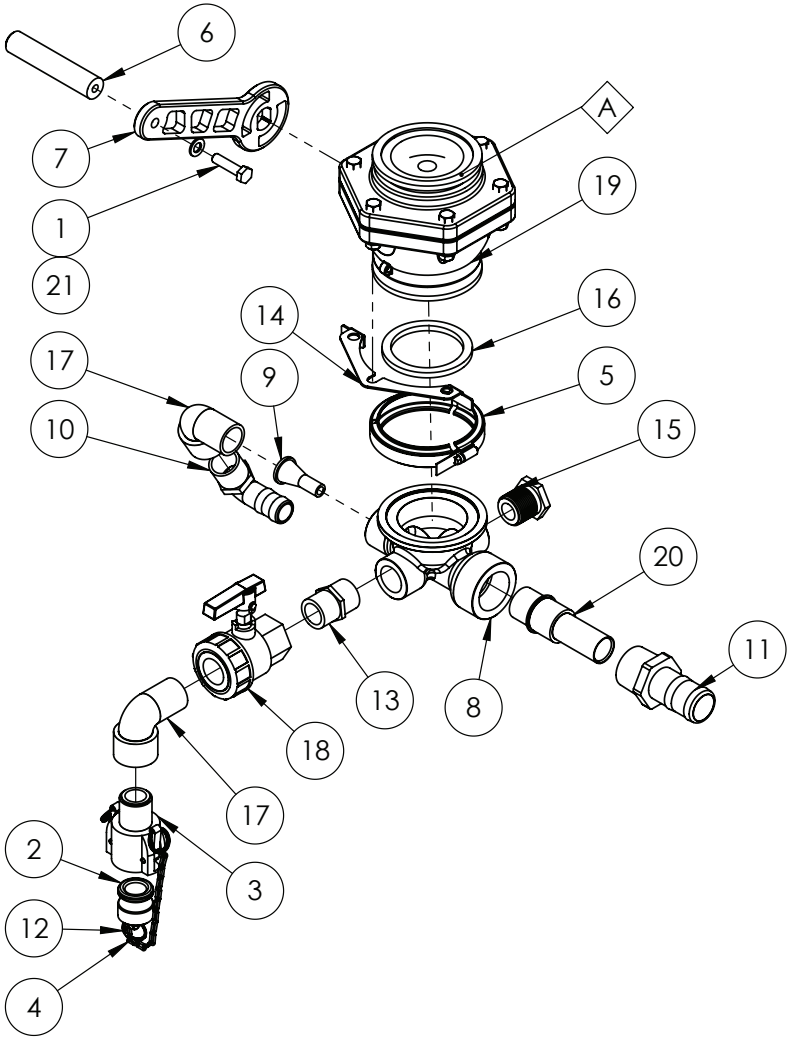

IF DESCRIPTION PREFIX IS ASSEMBLY DRAWING ONLY OR PRODUCTION DRAWING ONLY THE ITEM IS NOT FOR SALE			
ITEM	PART NUMBER	DESCRIPTION	QTY
1	GA5006079	BOLT M10 X 40 SS A2-70	1
2	GA5076005	CAM LEVER, MALE PLUG, SUITS 1 & 1 1/4 COUPLINGS, BANJO	1
3	GA5076007	CAM LEVER, 1 FEMALE COUPLER, 1 MALE THREAD, BANJO	1
4	GA5001491	Chain 2 x 20 mm SS 316, 146102, Cut 150mm	0.15
5	FC300	CLAMP, 3" FLANGE MANIFOLD, BANJO	1
6	GA4551515	FOOT ACTIVATED HANDLE, HOPPER, G6 MY20	1
7	GA4406215	HANDLE, 3" BALL VALVE, HOPPER BOTTOM, G6 MY20	1
8	GA5078605	HOPPER BOTTOM, MOULDED	1
9	L057A	HOPPER JET TAPERED 9mm	1
10	GA5077723	HOSE BARB 90 DEGREE 1" BANJO	1
11	GA5077731	HOSE BARB, STRAIGHT, 1 1/2 MALE THREAD X 1 1/2 HOSE, BANJO	1
12	GA5002077	KEY RING, 25mm, SS	1
13	GA5077914	NIPPLE, SHORT, 1" MALE THREAD X 1" MALE THREAD, BANJO	1
14	GA4412695	PLATE, VALVE STOP, 3", STUBBY, BANJO, MVS300CFFP, HOPPER	1
15	GA5077945	PLUG, 1 MALE THREAD, BANJO	1
16	GA5076723	SEAL, EPDM, SUIT 3 FLANGE FITTING, BANJO	1
17	GA5078137	STREET ELBOW, 90 DEGREE, 1 MALE X 1 FEMALE, BANJO	2
18	GA5078164	VALVE, BALL, 1 FEMALE THREAD INLET / OUTLET, FULL PORT, LEVER HANDLE, BANJO	1
19	GA4912900	VALVE, BALL, 3", BANJO, MVS300CFFP, DRILLED, SUIT HOPPER BOTTOM	1
20	GA4551895	VENTURI, HOPPER BOTTOM, DIA. 20mm	1
21	GA5000117	WASHER 10mm FLAT SS HD	1
GA4949285 GOLDACRES		PRODUCTION DRAWING ONLY. HOPPER BOTTOM, ASSEMBLY, G6, MY20	REV 05.B

Wash Down Gun Assembly

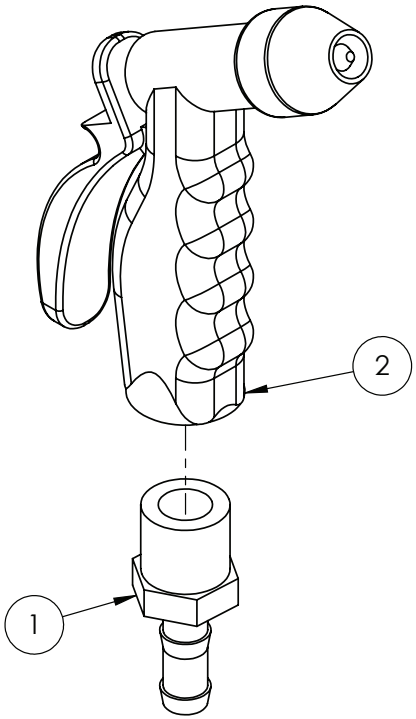

IF DESCRIPTION PREFIX IS ASSEMBLY DRAWING ONLY OR PRODUCTION DRAWING ONLY THE ITEM IS NOT FOR SALE			
ITEM	PART NUMBER	DESCRIPTION	QTY
1	GA5077713	HOSE BARB, STRAIGHT, 3/4 MALE THREAD X 1/2 HOSE, BANJO	1
2	GA5051390	WASH DOWN GUN WATER SPRAY	1
GA4950925 GOLDACRES		WASH GUN ASSEMBLY, G6 MY20	REV 00

15 - Engine & Transmission

REPLACEMENT PARTS			
ITEM	PART NUMBER	DESCRIPTION	QTY
-	GA5025765	MOTOR, STARTER, SUIT, CUMMINS ENGINE, B4.5, 200HP, 4996706	1
-	GA5025770	ALTERNATOR, SUIT, CUMMINS ENGINE, B4.5, 200HP, 5523955	1
-	GA5025775	TENSIONER, BELT, SUIT, CUMMINS ENGINE, B4.5, 200HP, 3976834	1
-	GA5075275	BELT, SERPENTINE, WATER PUMP ALTERNATOR, QSB6.7L CUMMINS, G6 ONLY, 8PK1725	1

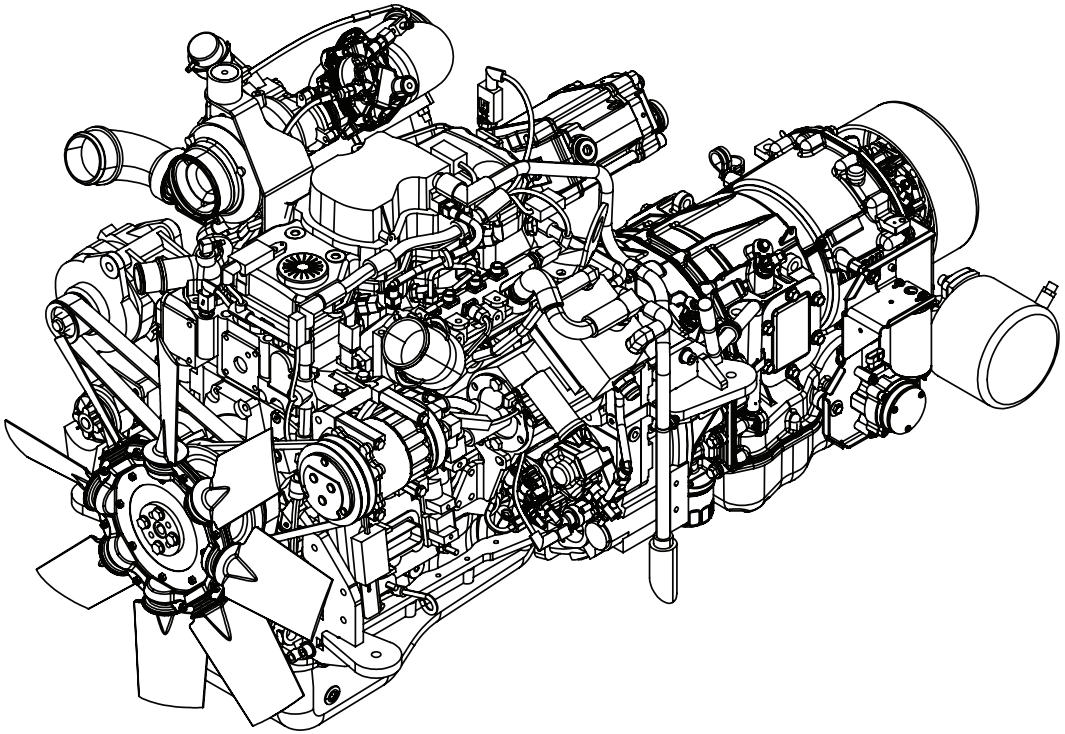

BUILD OPTIONS:
65242 - WEEDETECT BILBERRY USING 3TS 250mm 16 SECTIONS 36M BOOM.
65241 - WEEDETECT BILBERRY TO SUIT HAWKEYE 36M BOOM.

GA6101790 GOLDACRES	ENGINE & TRANSMISSION ASSEMBLY, G4 S2, MY24	REV 00

Engine, Sump Drain Plug

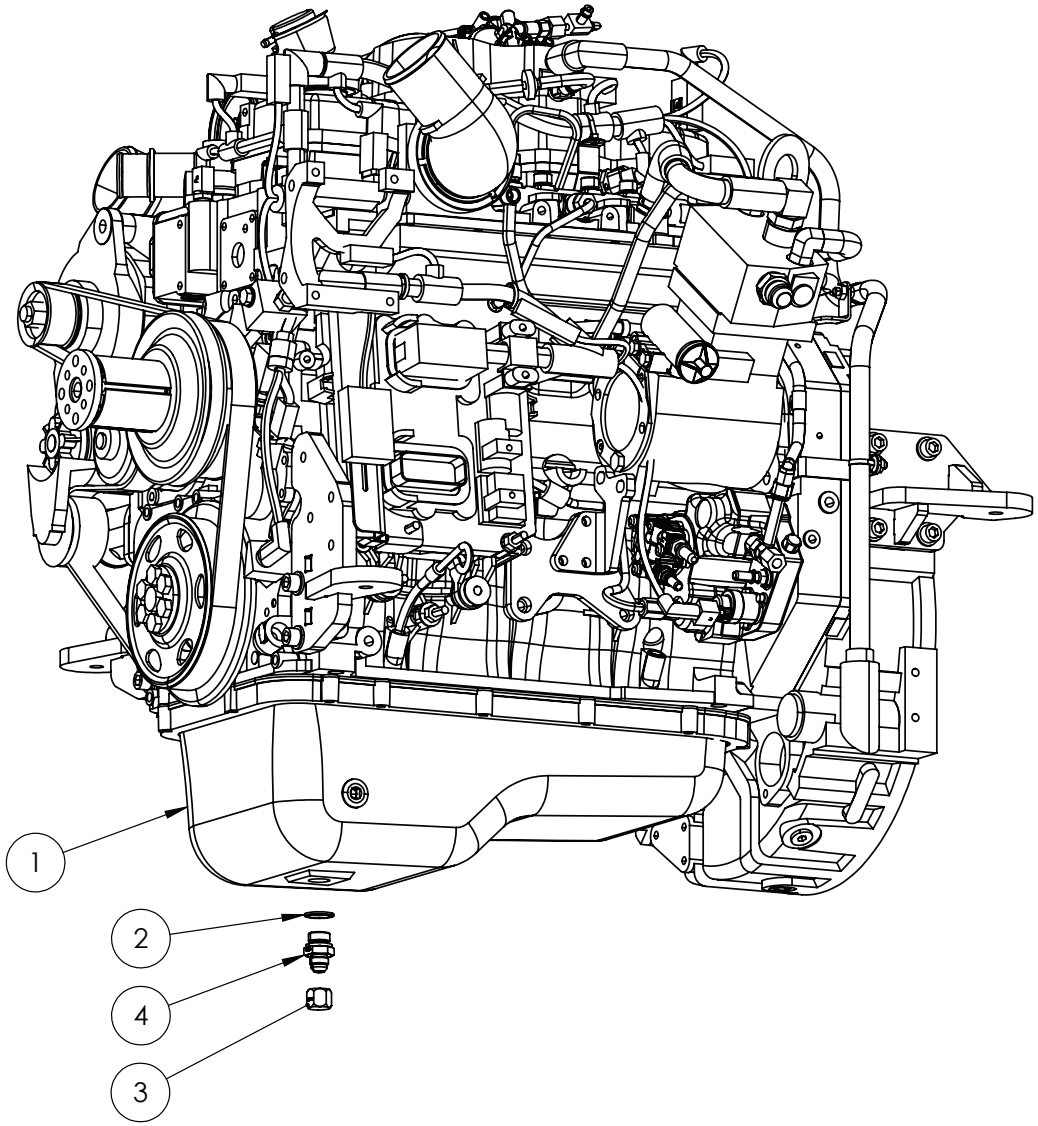

IF DESCRIPTION PREFIX IS ASSEMBLY DRAWING ONLY OR PRODUCTION DRAWING ONLY THE ITEM IS NOT FOR SALE			
ITEM	PART NUMBER	DESCRIPTION	QTY
1	GA2700138	ENGINE, CUMMINS, B4.5, 200HP, STAGE 2, G4, S2	1
2	GA3500179	HYDRAULIC SEAL, M22, METAL BONDED	1
3	GA3500794	HYDRAULIC ADAPTOR, CAP, 3/4" JIC FEMALE, S65-12	1
4	GA3500726	HYDRAULIC ADAPTOR, NIPPLE,3/4" JIC MALE X M22 X 1.5 MALE, M7L-2212	1
GA6101790-01 GOLDACRES		ENGINE & TRANSMISSION ASSEMBLY, G4 S2, MY24	REV 00

Engine, Fuel Filter, Primary

REPLACEMENT PARTS			
ITEM	PART NUMBER	DESCRIPTION	QTY
A	GA2700192	FILTER, FUEL, PRIMARY, CUMMINS B4.5L, FS1098	1

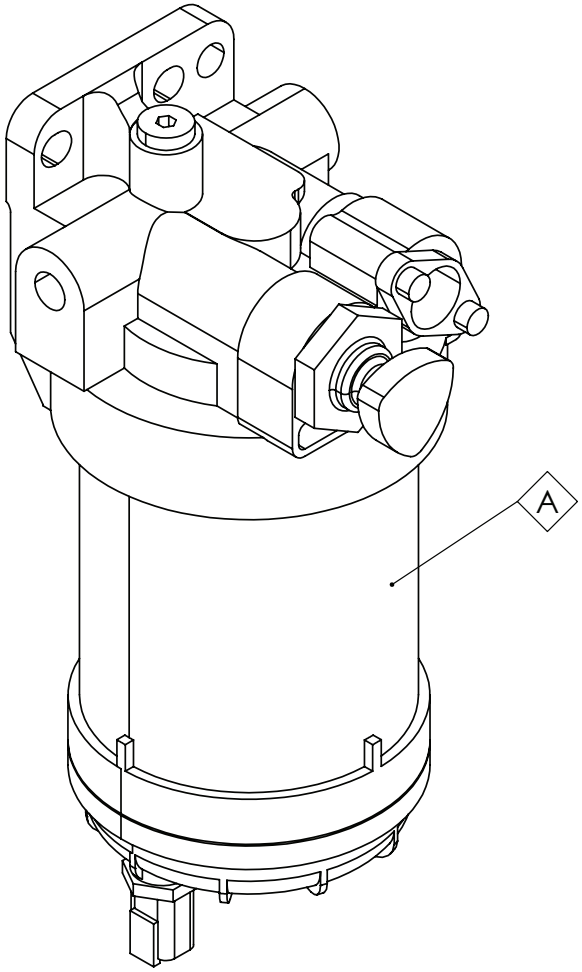

GA2700190 GOLDACRES	FUEL FILTER, COMPLETE, CUMMINS, B4.5L, FS90137	REV 00

Engine, Fuel Drain Line Adaptors

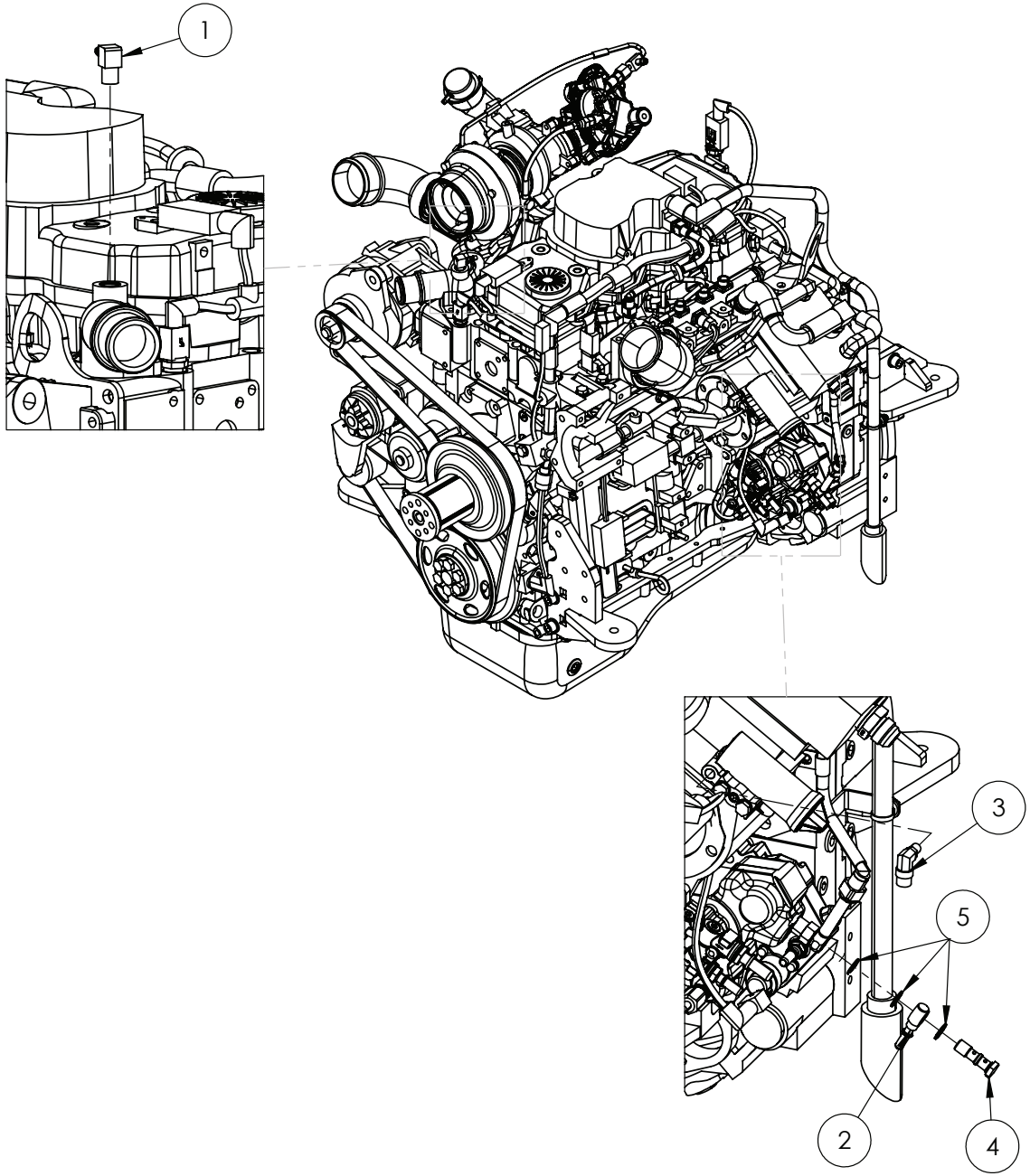

IF DESCRIPTION PREFIX IS ASSEMBLY DRAWING ONLY OR PRODUCTION DRAWING ONLY THE ITEM IS NOT FOR SALE			
ITEM	PART NUMBER	DESCRIPTION	QTY
1	GA5048340	1/4" BRASS ELBOW	1
2	GA4562335	ADAPTOR, 12mm BANJO X 5/16 SAE J2044 QUICK CONNECT MALE	1
3	GA5078525	AIR FITTING, ELBOW, SWIVEL, 3/8" TUBE, 1/8" NPT MALE, PUSH IN, BRASS, ALKON - AQ69-DOTS-6X2	1
4	GA5078842	BOLT, BANJO, M12 X 1.25, STAINLESS STEEL, DOUBLE	1
5	GA3500725	HYDRAULIC ADAPTOR, SEAL, METAL BONDED, M12, MBD-12	3
GA6101790-02 GOLDACRES		ENGINE & TRANSMISSION ASSEMBLY, G4 S2, MY24	REV 00

Engine, Ball Valves, Cooling Line, Inlet/Outlet

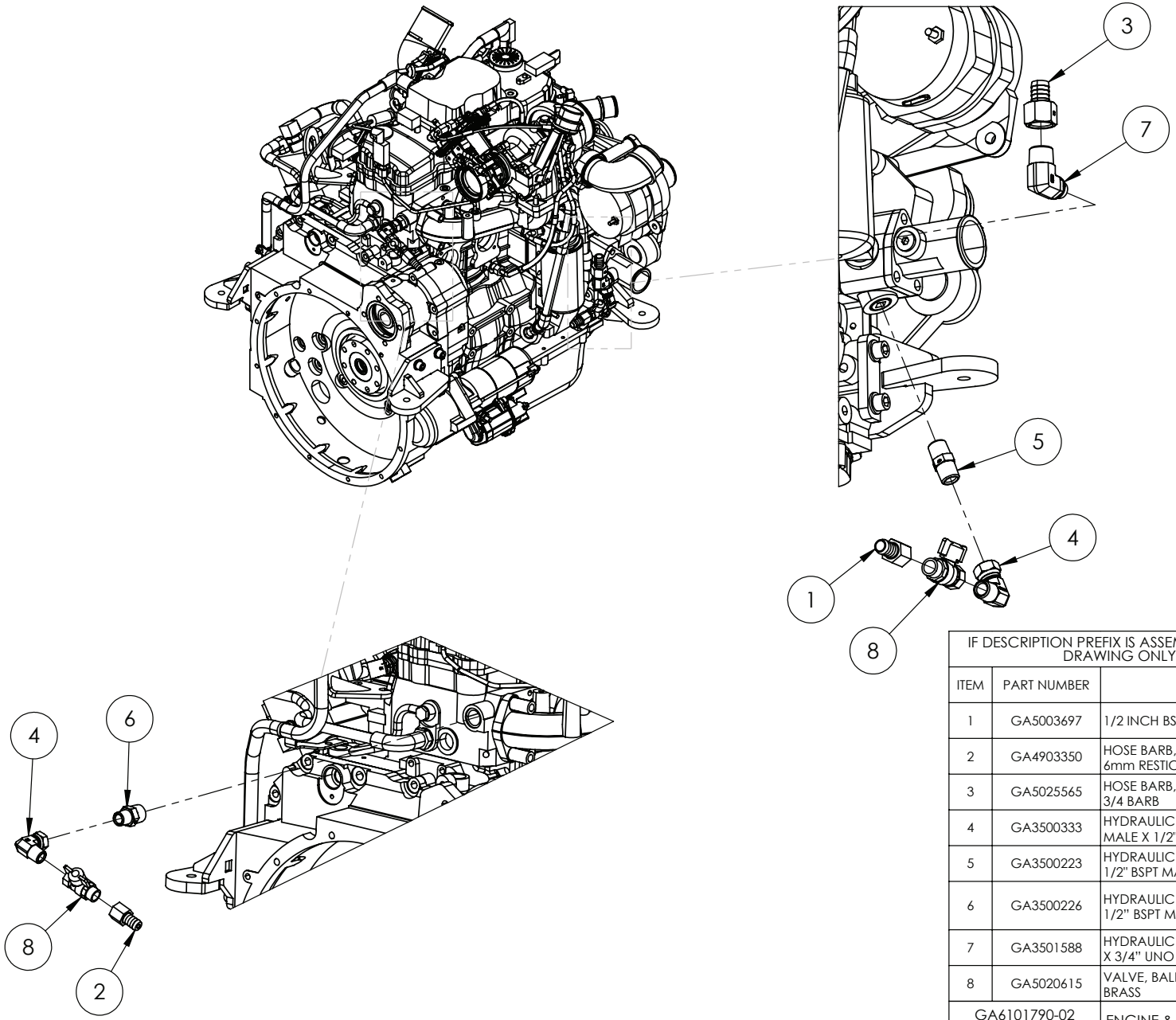

IF DESCRIPTION PREFIX IS ASSEMBLY DRAWING ONLY OR PRODUCTION DRAWING ONLY THE ITEM IS NOT FOR SALE			
ITEM	PART NUMBER	DESCRIPTION	QTY
1	GA5003697	1/2 INCH BSP - 5/8 BARB	1
2	GA4903350	HOSE BARB, BRASS, 1/2" BSP TO 5/8" HOSE BARB, 6mm RESTICTOR	1
3	GA5025565	HOSE BARB, STRAIGHT, BRASS, 3/4 BSPT FEMALE - 3/4 BARB	1
4	GA3500333	HYDRAULIC ADAPTER, ELBOW, 90 DEGREE, 1/2" MALE X 1/2" FEMALE SWIVEL	2
5	GA3500223	HYDRAULIC ADAPTOR, NIPPLE, 1/2" BSPT MALE X 1/2" BSPT MALE	1
6	GA3500226	HYDRAULIC ADAPTOR, NIPPLE, 3/4" BSPT MALE X 1/2" BSPT MALE	1
7	GA3501588	HYDRAULIC ADAPTOR, 90 DEGREE ELBOW, 3/4" BSP X 3/4" UNO	1
8	GA5020615	VALVE, BALL, 12mm, 1/2" MALE, FEMALE BUTTERFLY, BRASS	2
GA6101790-02 GOLDACRES		ENGINE & TRANSMISSION ASSEMBLY, G4 S2, MY24	REV 00

Engine, Plate Bracket & Rubber, Air Cleaner to Turbo

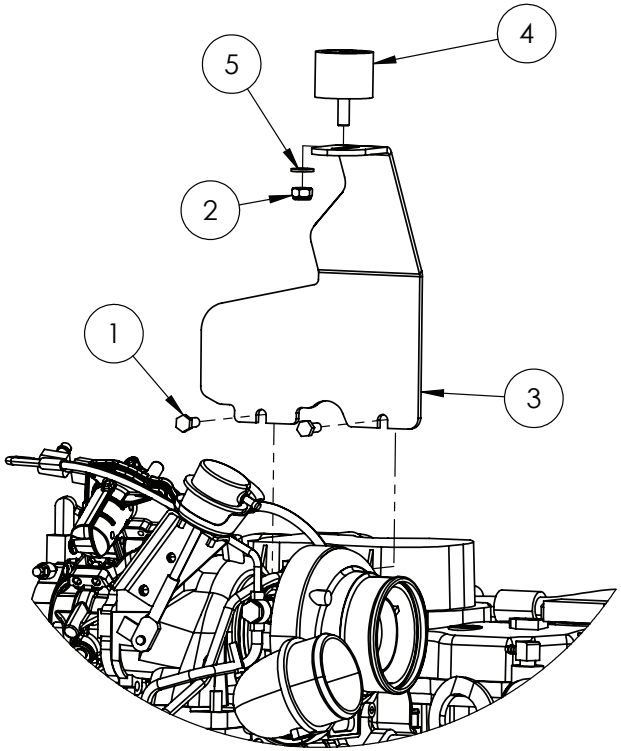

IF DESCRIPTION PREFIX IS ASSEMBLY DRAWING ONLY OR PRODUCTION DRAWING ONLY THE ITEM IS NOT FOR SALE			
ITEM	PART NUMBER	DESCRIPTION	QTY
1	GA5004085	BOLT M8 X 20 GR8.8 ZP	2
2	GA5000141	NUT M10 NYLOC ZP	1
3	GA4414250	PLATE, BRACKET, AIR CLEANER TO TURBO PIPE, B4.5 ENGINE	1
4	GA5014609	RUBBER BUFFER, 50mm DIA X 40mm LONG, M10 X 25 MALE X M10 FEMALE	1
5	GA5000117	WASHER 10mm FLAT SS HD	1
GA6101790-03 GOLDACRES		ENGINE & TRANSMISSION ASSEMBLY, G4 S2, MY24	REV 00

Engine, Air Compressor Pump & V-Belt

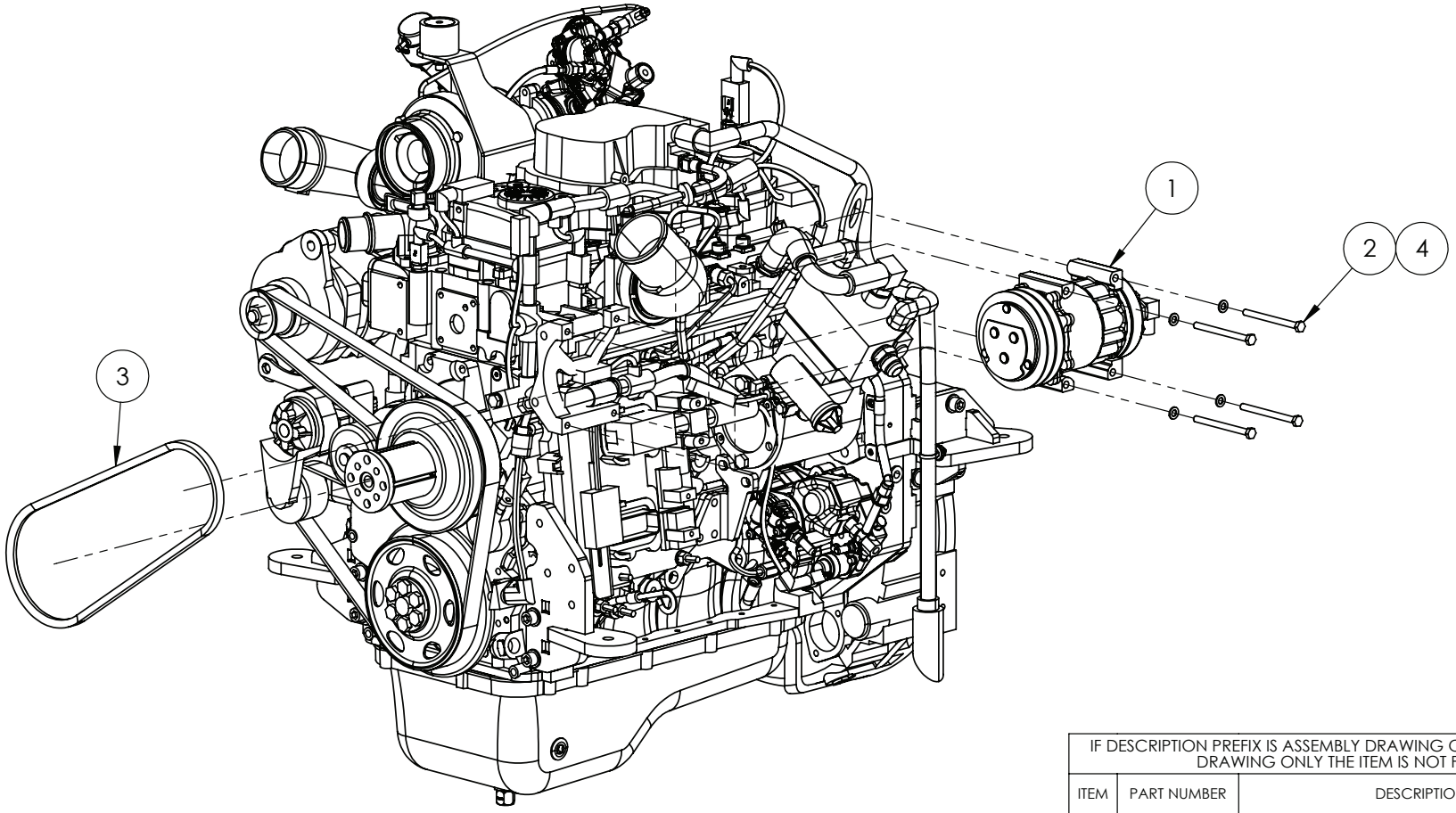

IF DESCRIPTION PREFIX IS ASSEMBLY DRAWING ONLY OR PRODUCTION DRAWING ONLY THE ITEM IS NOT FOR SALE			
ITEM	PART NUMBER	DESCRIPTION	QTY
1	GA5071640	AC COMPRESSOR SANDEN U4626	1
2	GA5004681	BOLT M8 X 100 GR8.8 ZP	4
3	GA5071435	V BELT, AIR CONDITIONER COMPRESSOR, G3 G4 SERIES	1
4	GA5003643	WASHER 8mm FLAT SS HD	4
GA6101790-04 GOLDACRES		ENGINE & TRANSMISSION ASSEMBLY, G4 S2, MY24	REV 00

Engine, 24V, Alternator & Engine Pulley Hardware, Billberry

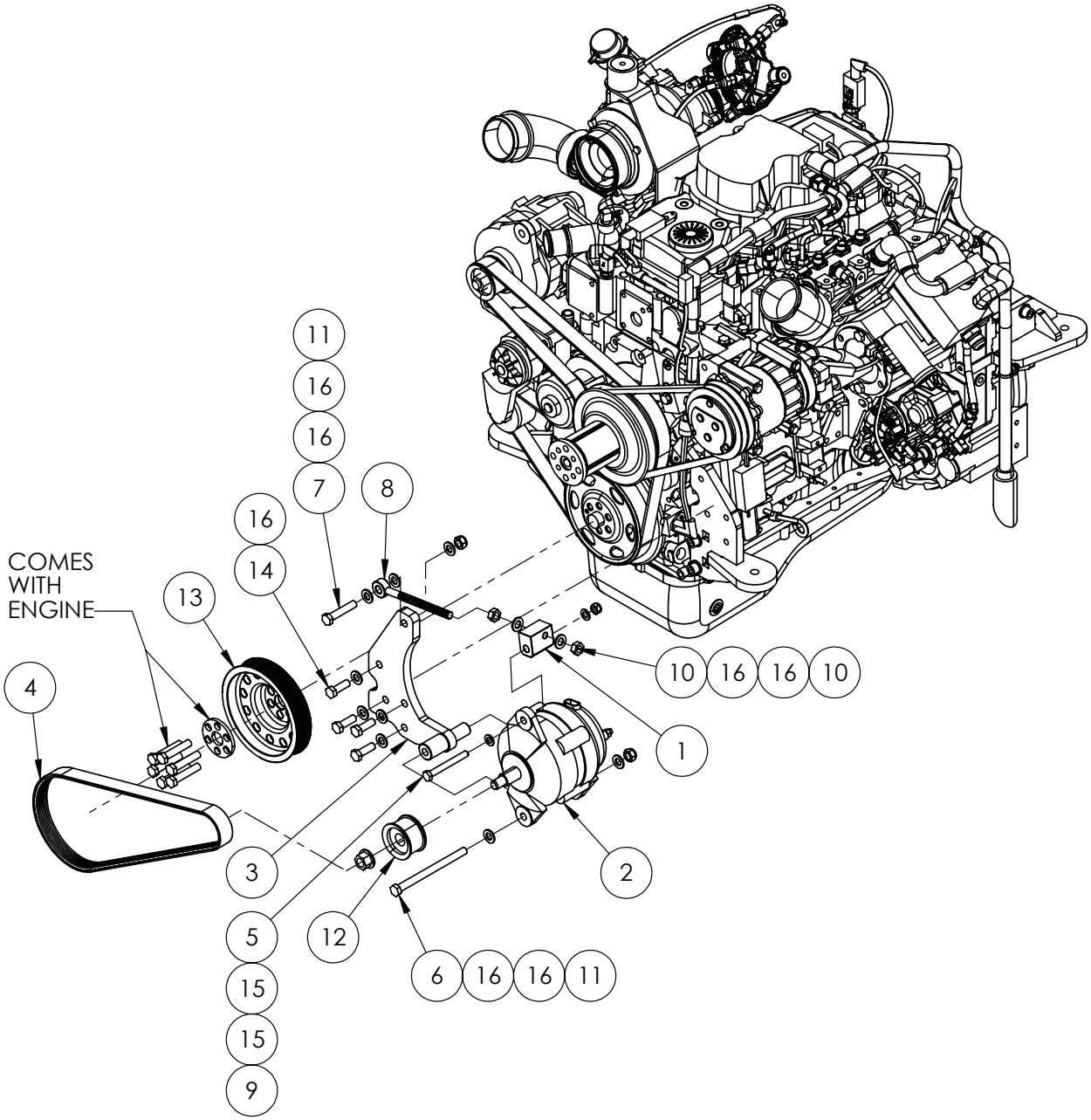

IF DESCRIPTION PREFIX IS ASSEMBLY DRAWING ONLY OR PRODUCTION DRAWING ONLY THE ITEM IS NOT FOR SALE			
ITEM	PART NUMBER	DESCRIPTION	QTY
1	GA4562420	ADJUSTER BLOCK, AC COMPRESSOR, B4.5 ENGINE	1
2	GA5078908	ALTERNATOR 24V 70A J180	1
3	GA4604650	ALTERNATOR PIVOT MOUNT, 24V ALTERNATOR	1
4	GA2700163	BELT, MULTIRIB, 8PK 1075, PK7I , OPTIBELT	1
5	GA5022410	BOLT M10 X 90 GR8.8 ZP	1
6	GA5000277	BOLT M12 X 160 GR8.8 ZP	1
7	GA5000335	BOLT M12 X 60 GR8.8 ZP	1
8	GA5069025	FAN PUMP DRIVE BRACKET ADUSTER BOLT SP 2011	1
9	GA5000141	NUT M10 NYLOC ZP	1
10	GA5000559	NUT M12 HEX ZP	2
11	GA5012461	NUT M12 NYLOC ZP	2
12	GA5078907	PULLEY, ALTERNATOR, 60mm DIAMETER 8 GROOVE, 24-1755 8PV	1
13	GA4583655	PULLEY, ENGINE, 173mm DIAMETER 8PK MULTIRIB BELT	1
14	GA5000311	SET SCREW M12 X 35 GR 8.8 ZP	4
15	GA5000117	WASHER 10mm FLAT SS HD	2
16	GA5000577	WASHER 12mm FLAT SS HD	11
GA6101790-04 GOLDACRES		ENGINE & TRANSMISSION ASSEMBLY, G4 S2, MY24	REV 00

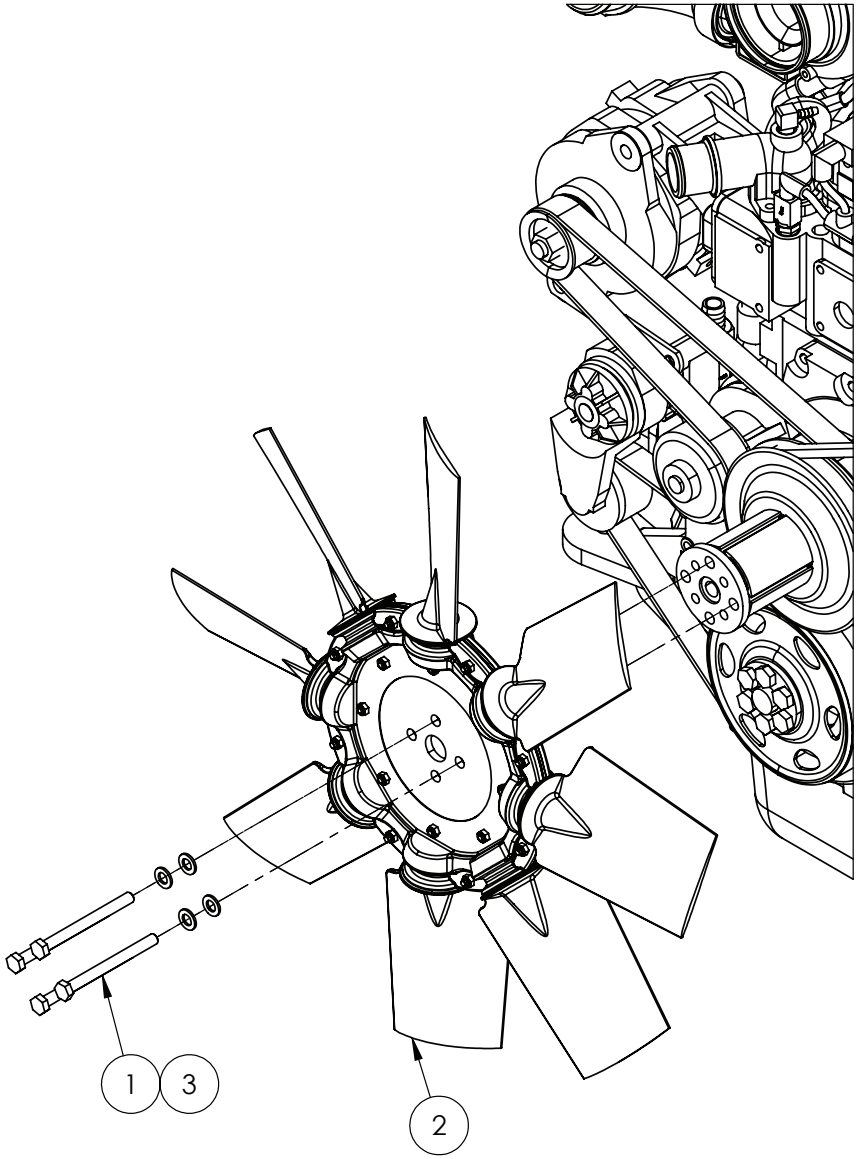

IF DESCRIPTION PREFIX IS ASSEMBLY DRAWING ONLY OR PRODUCTION DRAWING ONLY THE ITEM IS NOT FOR SALE			
ITEM	PART NUMBER	DESCRIPTION	QTY
1	GA5011141	BOLT M10 X 110 GR8.8 ZP	4
2	GA2700151	FAN, FAN IMPELLER, B4.5, INNOTHERM, G4, S2	1
3	GA5000117	WASHER 10mm FLAT SS HD	4
GA6101790-05 GOLDACRES		ENGINE & TRANSMISSION ASSEMBLY, G4 S2, MY24	REV 00

Engine, Transmission Mounting Bolts

REPLACEMENT PARTS			
ITEM	PART NUMBER	DESCRIPTION	QTY
-	GA5048280	FILTER T/s ALLISON 2000 SPIN ON	-
-	GA5048285	FILTER, OIL, INTERNAL, REPLACE DURING TRANSMISSION OVERHAUL, SUIT ALLISON 2000 TRANSMISSION	-
-	GA5013769	REAR MAIN SEAL FOR ALLISON AUTO TRANS	-

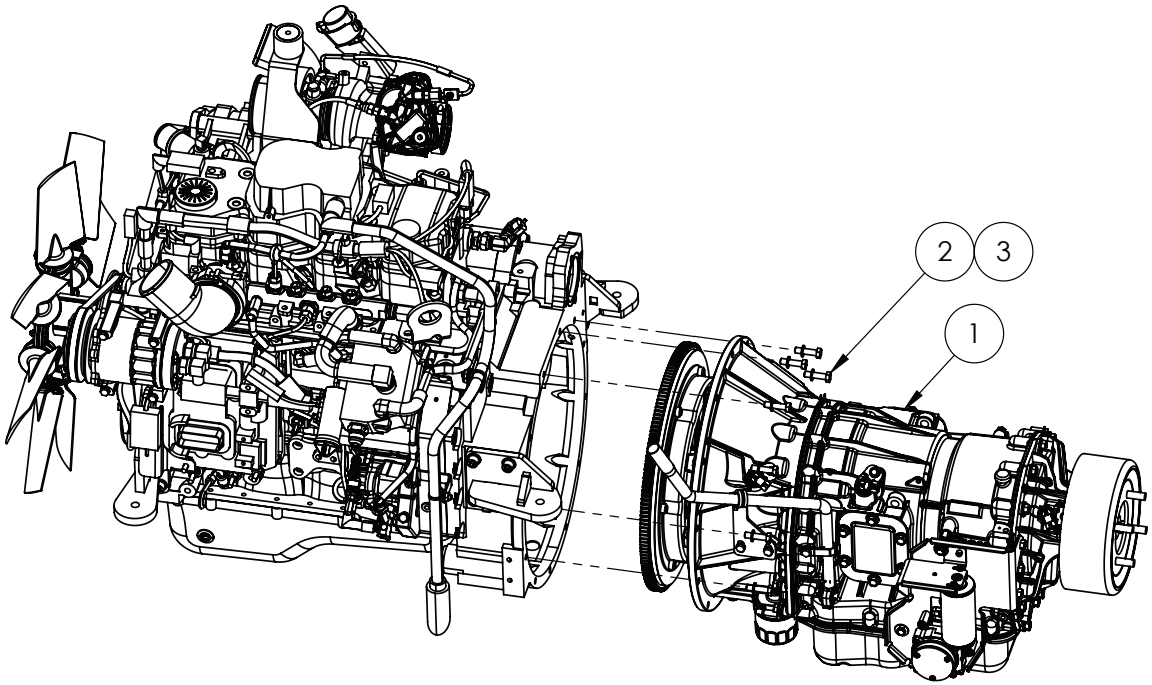

IF DESCRIPTION PREFIX IS ASSEMBLY DRAWING ONLY OR PRODUCTION DRAWING ONLY THE ITEM IS NOT FOR SALE			
ITEM	PART NUMBER	DESCRIPTION	QTY
1	GA2700139	ALLISON 2100 - TC-221 TRANSMISSION	1
2	GA5006071	BOLT M10 X 40 GR10.9 ZP	12
3	GA5000117	WASHER 10mm FLAT SS HD	12
GA6101790-06A GOLDACRES		ENGINE & TRANSMISSION ASSEMBLY, G4 S2, MY24	REV 00.B

Transmission Dipstick Bracket

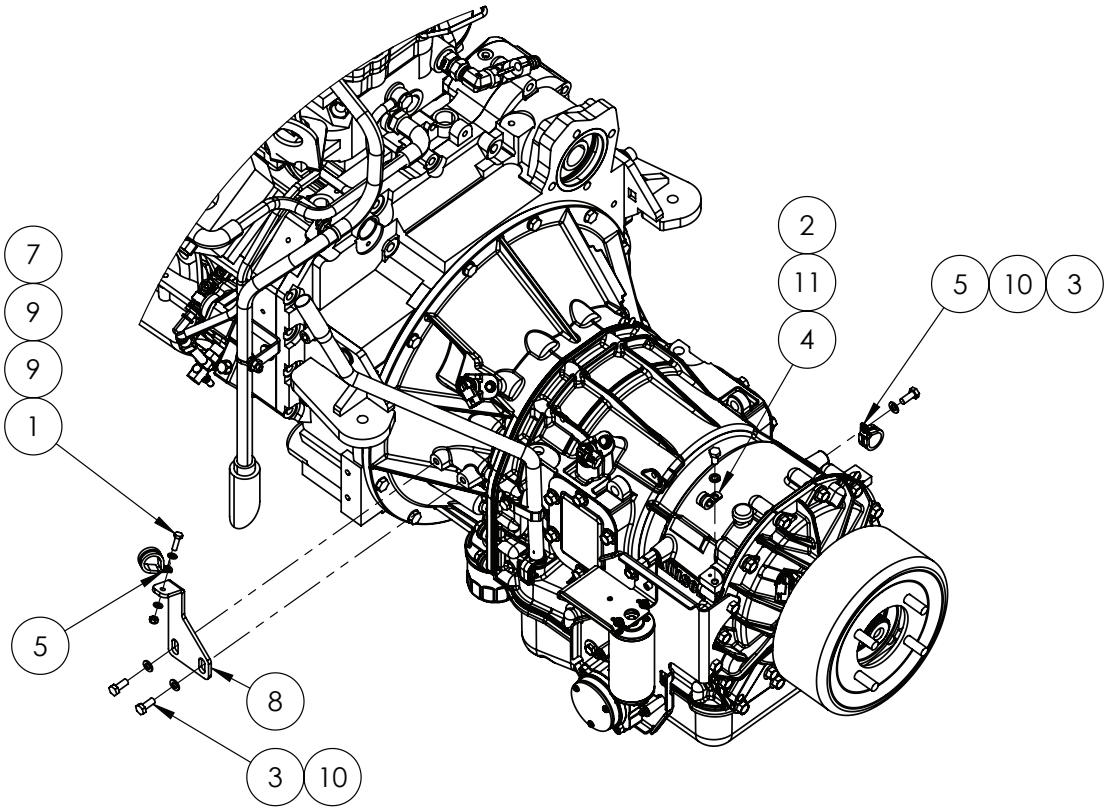

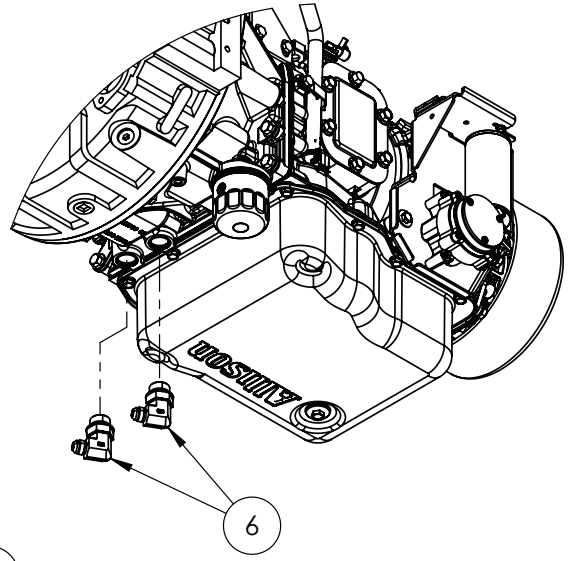

IF DESCRIPTION PREFIX IS ASSEMBLY DRAWING ONLY OR PRODUCTION DRAWING ONLY THE ITEM IS NOT FOR SALE			
ITEM	PART NUMBER	DESCRIPTION	QTY
1	GA5004065	BOLT M6 X 20 GR8.8 ZP	1
2	GA5011465	BOLT M8 X 16 GR8.8 ZP	1
3	GA5004085	BOLT M8 X 20 GR8.8 ZP	3
4	GA5055970	CLAMP P 10mm PC1020W1	1
5	GA5055975	CLAMP P 27mm PC2720W1	2
6	GA3500763	HYDRAULIC ADAPTOR, ELBOW, 1 1/16" UNO TO 3/4" JIC, 90 DEG, S91-1217	2
7	GA5048115	NUT M6 NYLOC ZP	1
8	GA4413095	PLATE, BRACKET,TRANSMISSION DIP STICK, G4, S2	1
9	GA5004437	WASHER 6mm FLAT SS	2
10	GA5003643	WASHER 8mm FLAT SS HD	3
11	GA5004919	WASHER 8mm SPRING SS	1
GA6101790-06 GOLDACRES		ENGINE & TRANSMISSION ASSEMBLY, G4 S2, MY24	REV 00.B

Park Brake Mounting

REPLACEMENT PARTS			
ITEM	PART NUMBER	DESCRIPTION	QTY
A	GA5068650	PAD ASSEMBLY, PARK BRAKE, ALLISON 2500 TRANSMISSION	1
B	GA2700002	BRAKE DRUM, PARK BRAKE, ALLISON 2500 TRANSMISSION	1

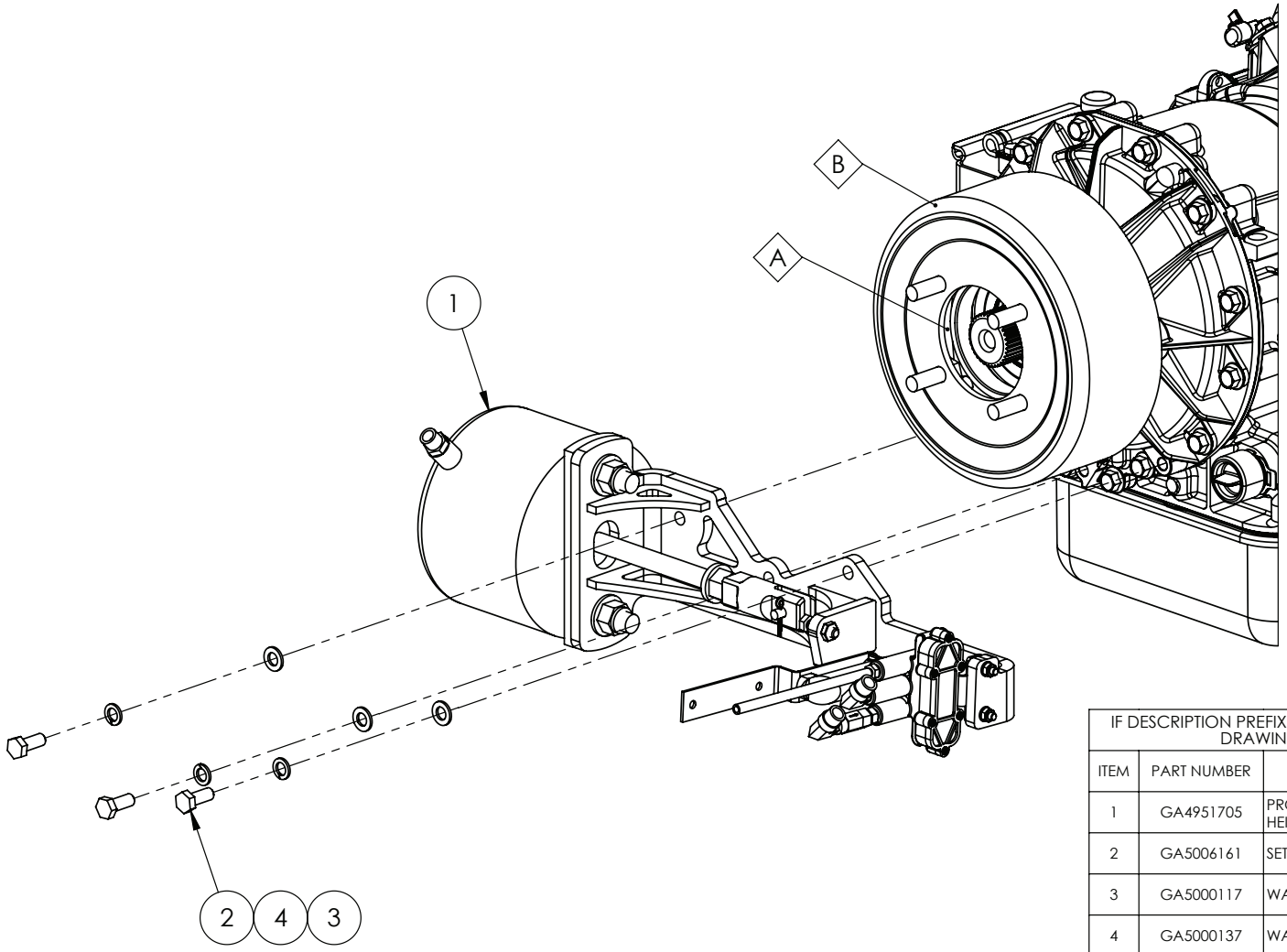

IF DESCRIPTION PREFIX IS ASSEMBLY DRAWING ONLY OR PRODUCTION DRAWING ONLY THE ITEM IS NOT FOR SALE			
ITEM	PART NUMBER	DESCRIPTION	QTY
1	GA4951705	PRODUCTION DRAWING ONLY, PARK BRAKE & RIDE HEIGHT ASSEMBLY, G4, S2	1
2	GA5006161	SET SCREW M10 X 25 GR8.8 ZP	3
3	GA5000117	WASHER 10mm FLAT SS HD	3
4	GA5000137	WASHER 10mm SPRING SS	3
GA6101790-07 GOLDACRES		ENGINE & TRANSMISSION ASSEMBLY, G4 S2, MY24	REV 00.B

Park Brake Assembly

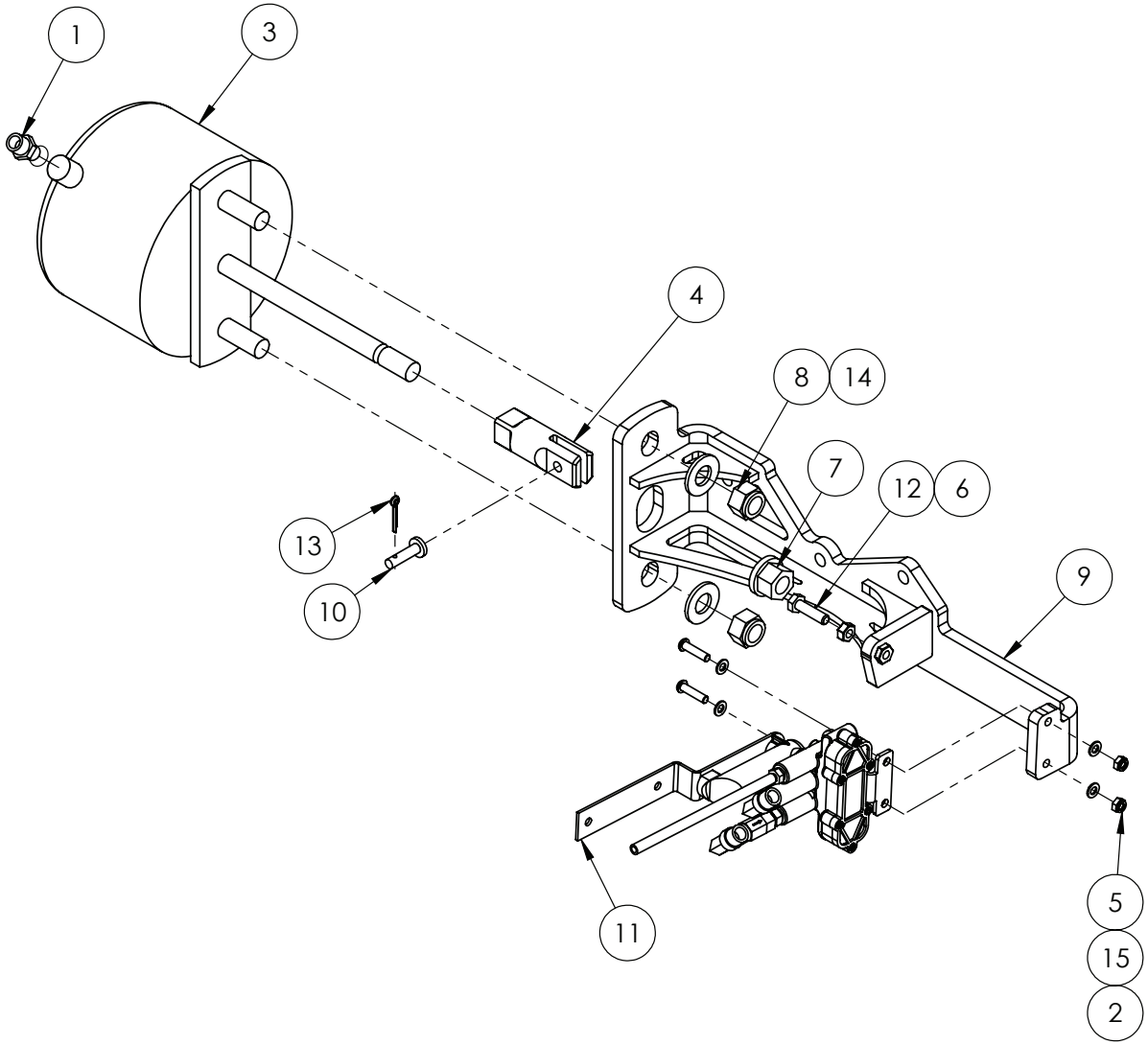

IF DESCRIPTION PREFIX IS ASSEMBLY DRAWING ONLY OR PRODUCTION DRAWING ONLY THE ITEM IS NOT FOR SALE			
ITEM	PART NUMBER	DESCRIPTION	QTY
1	GA5078517	AIR FITTING, STRAIGHT, 3/8" TUBE, 1/4" NPT MALE, PUSH IN, BRASS, ALKON - AQ68-DOT-6X4	1
2	GA5004067	BHCS M6 X 25 SS A2-70	2
3	GA7000088	BRAKE BOOSTER, PARKING BRAKE, HALDEX, SPRING PULL TYPE R, KSM0PT40, G4 S2	1
4	GA4583515	CLEVIS, 5/8-18 UNF THREAD TO 5/16" PIN	1
5	GA5048115	NUT M6 NYLOC ZP	2
6	GA5011499	NUT M8 ZP	1
7	GA4583675	NUT, 5/8 UNF, FLANGE, 4140 STEEL, G4, S2	1
8	GA0500140	NUT, 5/8" 18 TPI UNF, NYLOC, ZP	2
9	GA4604295	PARK BRAKE & RIDE HEIGHT MOUNTING BRAKET, G4, S2	1
10	GA5074560	PIN, CLEVIS, 5/16" DIA X 7/8" LONG	1
11	GA4949465	RIDE HEIGHT CONTROL VALVE, ASSEMBLY, REAR LEFT, G6 MY20	1
12	GA5011477	SET SCREW M8 X 30 GR8.8 ZP	1
13	GA5015683	SPLIT COTTER PIN M3.2 X 25 ZP	1
14	GA5001043	WASHER 16mm FLAT SS HD	2
15	GA5004437	WASHER 6mm FLAT SS	4
GA4951705 GOLDACRES		PRODUCTION DRAWING ONLY, PARK BRAKE & RIDE HEIGHT ASSEMBLY, G4, S2	REV 00

Hydraulic Pump, Assembly

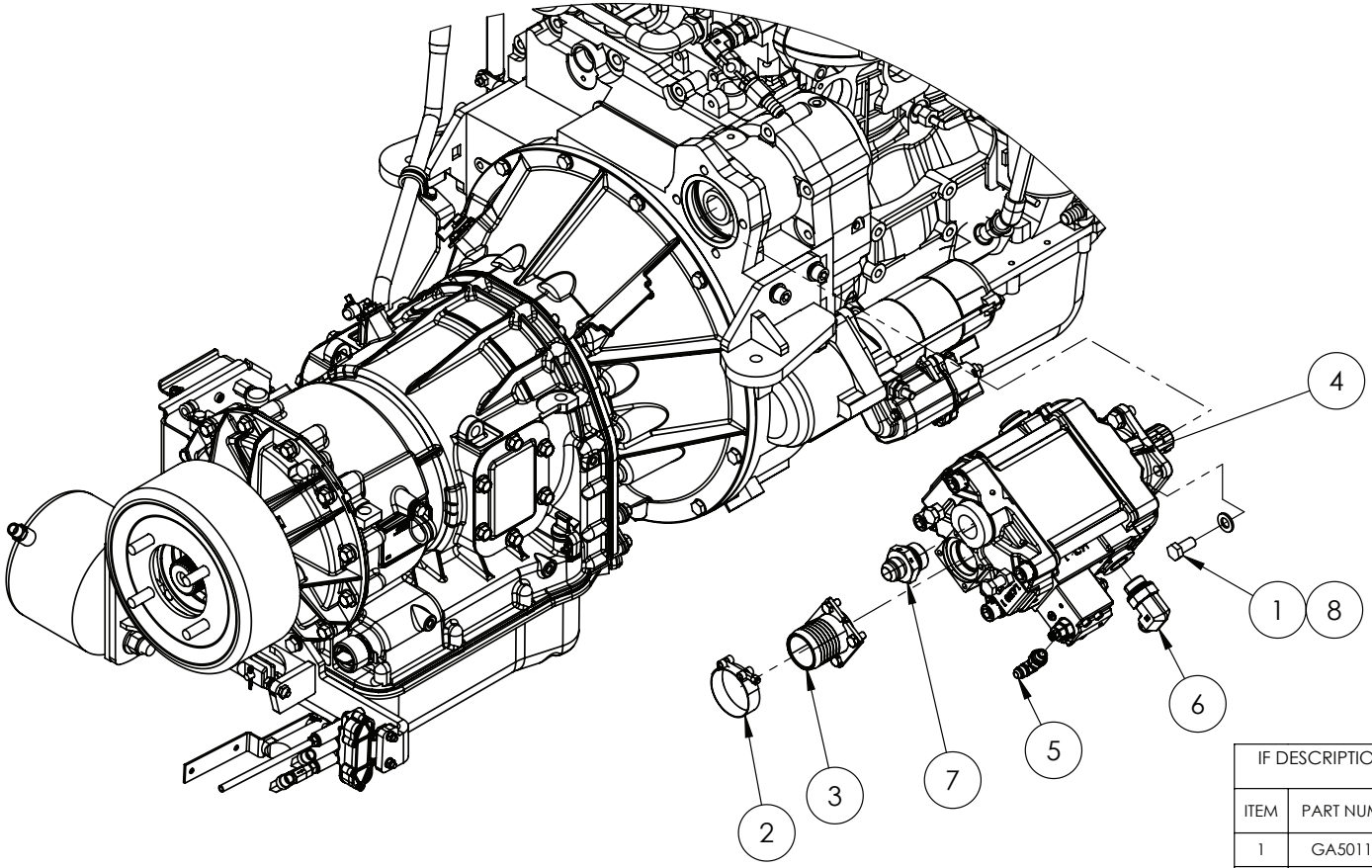

IF DESCRIPTION PREFIX IS ASSEMBLY DRAWING ONLY OR PRODUCTION DRAWING ONLY THE ITEM IS NOT FOR SALE			
ITEM	PART NUMBER	DESCRIPTION	QTY
1	GA5011229	BOLT M12 X 25 GR8.8 ZP	4
2	GA5078424	HOSE CLAMP, 60 - 63mm, WIDE BAND T-BOLT, SS, PERFORMER	1
3	GA3501212	HYDRAULIC PUMP SUCTION FITTING, STRAIGHT, FLANGE TO 2" BARB, G4 SERIES 2	1
4	GA3501210	HYDRAULIC PUMP, VARIABLE DISPLACEMENT, PISTON, 90CC, LOAD SENSING, PPV 90 ISO 90, G4 SERIES 2	1
5	GA3500734	HYDRAULIC ADAPTER, ELBOW, 90 DEGREE, 9/16" JIC X 1/4" BSPP MALE O-RING , S76-0409	1
6	GA3500733	HYDRAULIC ADAPTOR, ELBOW, 90 DEGREE, 3/4" JIC MALE X 3/4" BSPP MALE O-RING, S76-1212	1
7	GA3500735	HYDRAULIC ADAPTOR, NIPPLE, 1" BSPP O-RING MALE X 1 1/16" JIC MALE, S74-1617	1
8	GA5000577	WASHER 12mm FLAT SS HD	4
GA6101790-08 GOLDACRES		ENGINE & TRANSMISSION ASSEMBLY, G4 S2, MY24	REV 01

Engine Exhaust Pipe Bracket & Hardware

REPLACEMENT PARTS			
ITEM	PART NUMBER	DESCRIPTION	QTY
A	GA2700179	GASKET, EXHAUST CLAMP, V BAND	-
-	GA5053700	EXHAUST HEAT WRAP FIBREGLASS BLACK, SOLD PER ROLL	-
-	GA5055470	TIE CABLE SS 520MM SS316	-

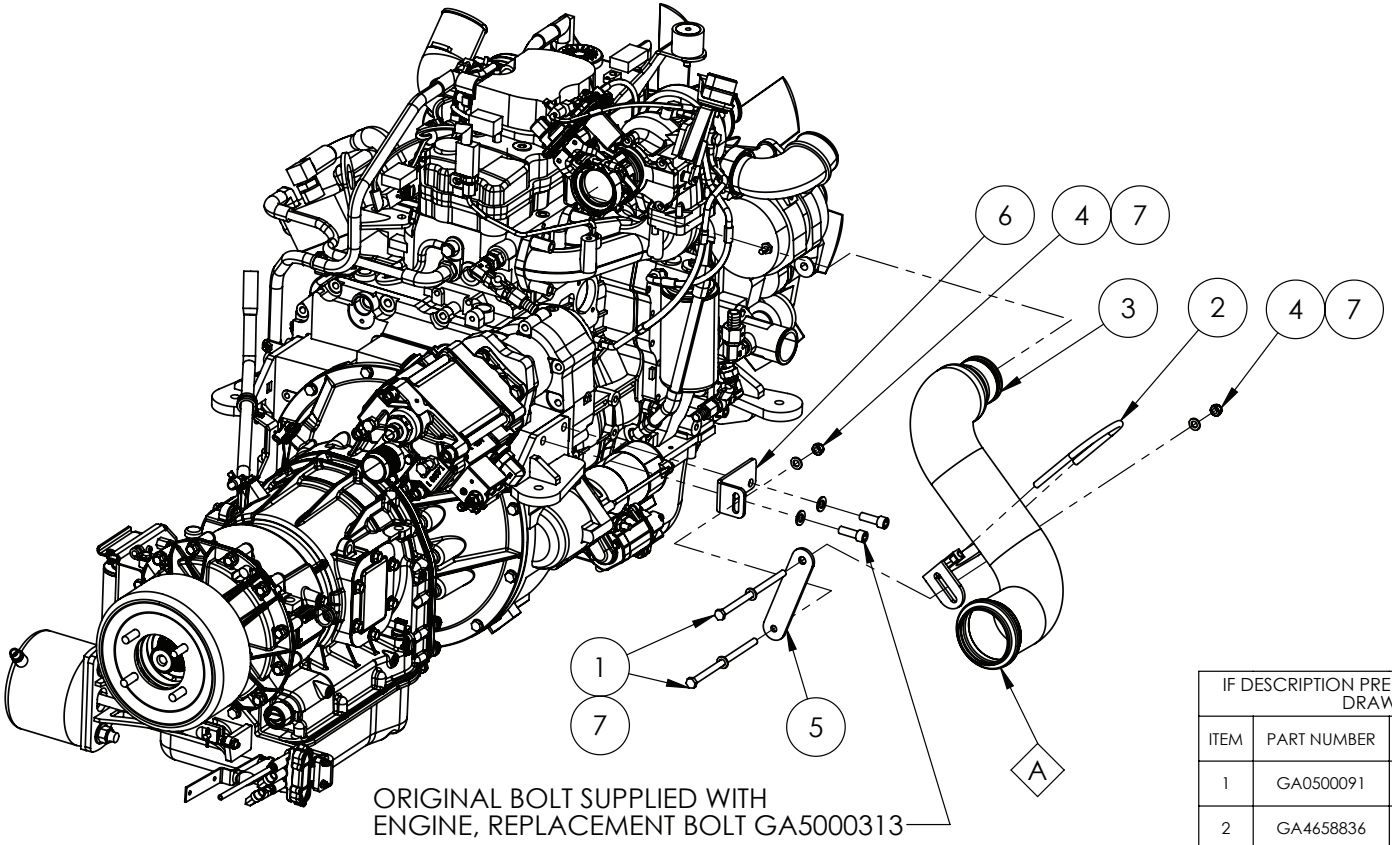

IF DESCRIPTION PREFIX IS ASSEMBLY DRAWING ONLY OR PRODUCTION DRAWING ONLY THE ITEM IS NOT FOR SALE			
ITEM	PART NUMBER	DESCRIPTION	QTY
1	GA0500091	BOLT M10 X 190 GR8.8 ZP	2
2	GA4658836	EXHAUST CLAMP/BUFFER BRACKET-SINGLE SP2011	1
3	GA2700109	EXHAUST PIPE, TURBO TO BELLOWS, M4	1
4	GA5000141	NUT M10 NYLOC ZP	2
5	GA4414255	PLATE, EXHAUST SUPPORT BRACKET, CROP CRUISER, G4.7, G5, G6, 2017	1
6	GA4413100	PLATE, EXHAUST TURBO DOWN PIPE SUPPORT BRACKET, G4, S2	1
7	GA5000117	WASHER 10mm FLAT SS HD	4
GA6101790-09 GOLDACRES		ENGINE & TRANSMISSION ASSEMBLY, G4 S2, MY24	REV 00.B

Exhaust System, Chassis Mount

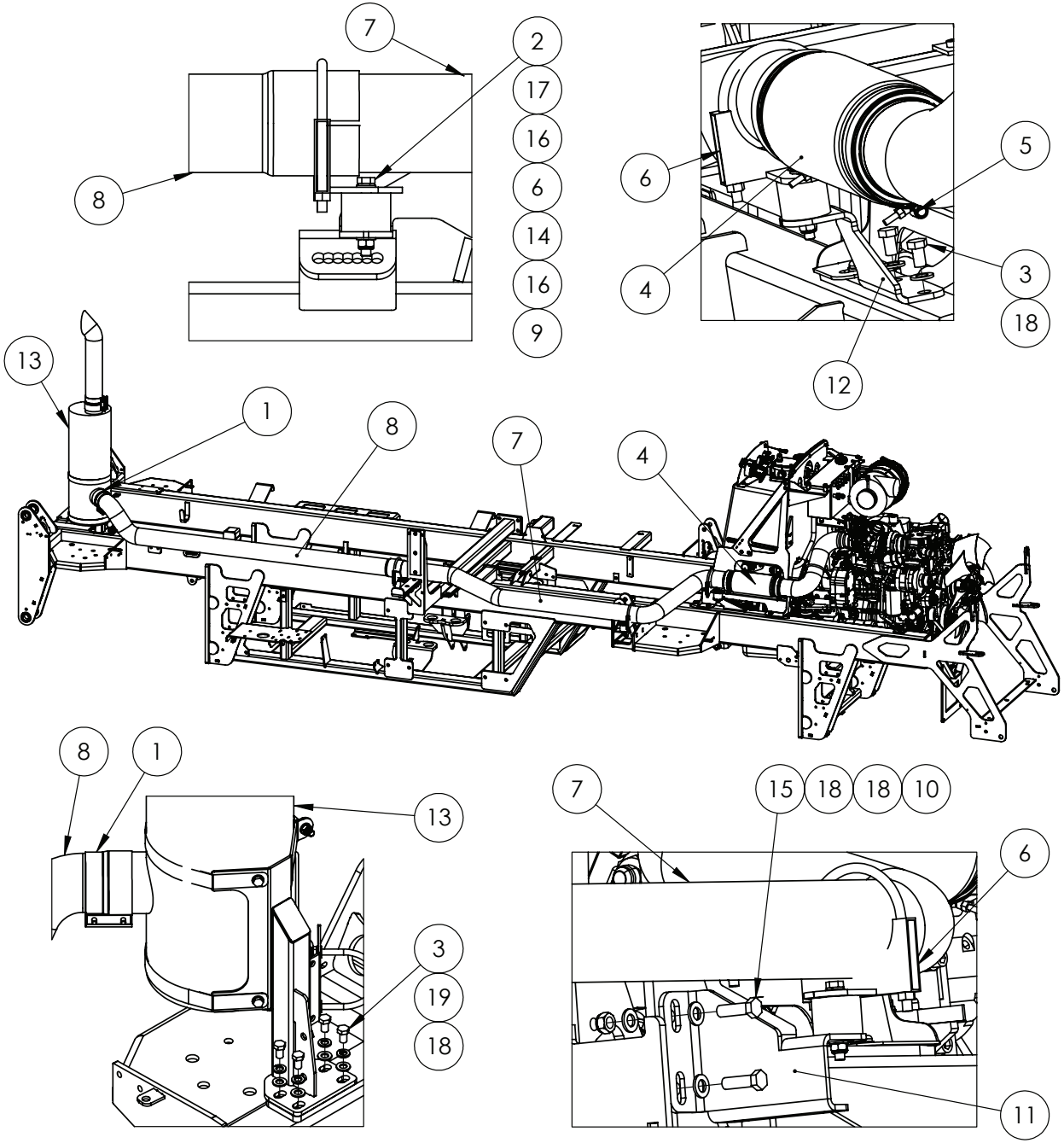

IF DESCRIPTION PREFIX IS ASSEMBLY DRAWING ONLY OR PRODUCTION DRAWING ONLY THE ITEM IS NOT FOR SALE			
ITEM	PART NUMBER	DESCRIPTION	QTY
1	GA2700015	4" TORCTITE EXHAUST CLAMP	1
2	GA5006113	BOLT M10 X 20 GR8.8 ZP	3
3	GA5011227	BOLT M12 X 20 GR8.8 ZP	6
4	GA2700113	EXHAUST BELLOWS, FLEX, 4", MARMON V BAND CLAMP	1
5	GA2700178	EXHAUST CLAMP, 4", V BAND	2
6	GA4658835	EXHAUST CLAMP/BUFFER BRACKET-SINGLE SP2011	3
7	GA2700132	EXHAUST PIPE, MIDDLE SECTION, G4, S2	1
8	GA2700133	EXHAUST PIPE, REAR SECTION, G4, S2	1
9	GA5000141	NUT M10 NYLOC ZP	3
10	GA5012461	NUT M12 NYLOC ZP	2
11	GA4414245	PLATE, BRACKET, EXHAUST, G4, S2	1
12	GA4414260	PLATE, EXHAUST SUPPORT BRACKET, CROP CRUISER, G4, S2	1
13	GA4914360	PRODUCTION DRAWING ONLY, EXHAUST, MUFFLER & MOUNT ASSEMBLY, G4 S2, MY24	1
14	GA5014609	RUBBER BUFFER, 50mm DIA X 40mm LONG, M10 X 25 MALE X M10 FEMALE	3
15	GA5000319	SET SCREW M12 X 40 GR8.8 ZP	2
16	GA5000117	WASHER 10mm FLAT SS HD	6
17	GA5000137	WASHER 10mm SPRING SS	3
18	GA5000577	WASHER 12mm FLAT SS HD	10
19	GA5000575	WASHER 12mm SPRING SS	4
GA7800211 GOLDACRES		ASSEMBLY DRAWING ONLY, EXHAUST SYSTEM, CHASSIS MOUNT, G4 S2, MY24	REV 00

Exhaust Stack Assembly

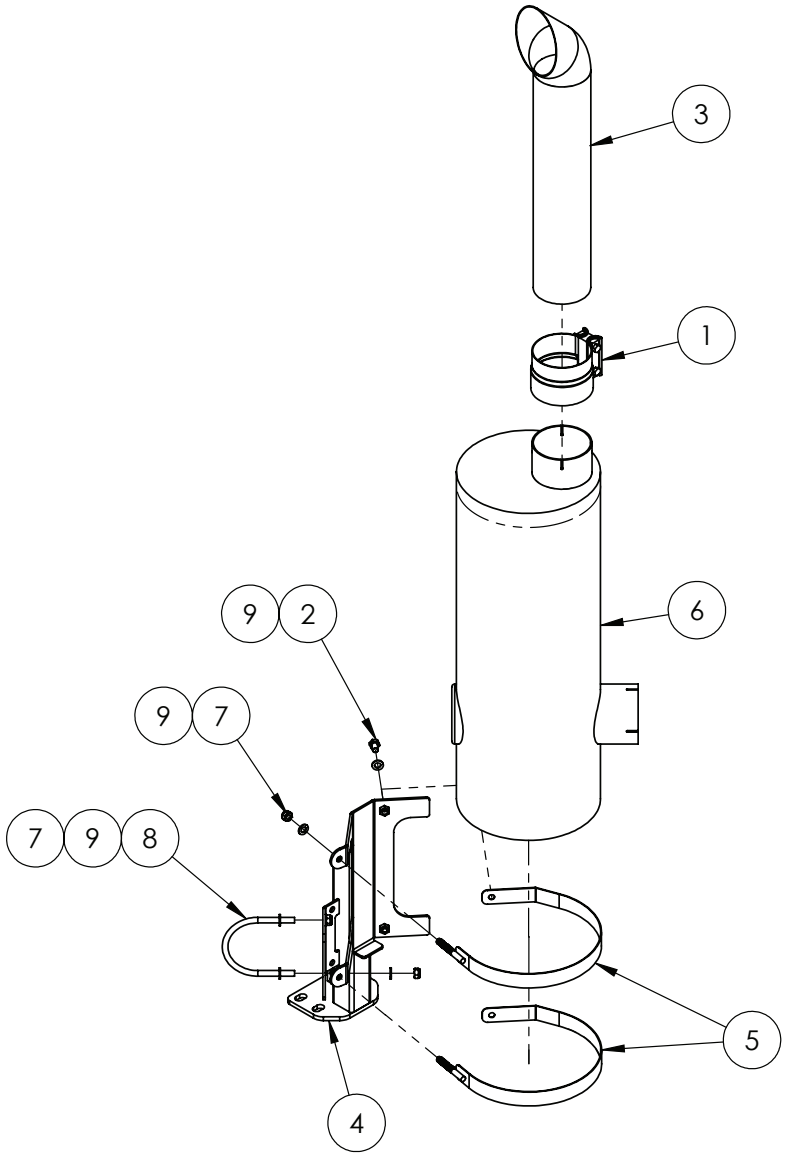

IF DESCRIPTION PREFIX IS ASSEMBLY DRAWING ONLY OR PRODUCTION DRAWING ONLY THE ITEM IS NOT FOR SALE			
ITEM	PART NUMBER	DESCRIPTION	QTY
1	GA2700015	4" TORCTITE EXHAUST CLAMP	1
2	GA5006143	BOLT M10 X 16 GR8.8 ZP	2
3	GA2700056	EXHAUST TIP, 4" X 635mm, G3V G4V	1
4	GA4604395	FABRICATED SUBASSEMBLY, EXHAUST MUFFLER MOUNT, G4, S2	1
5	GA4661580	MOUNT STRAP, EXHAUST MUFFLER, G3V G4V	2
6	GA5071590	MUFFLER, EXHAUST 4" 86148M, G3 G4 SERIES	1
7	GA5000141	NUT M10 NYLOC ZP	4
8	GA5070905	U BOLT SUIT PARALIFT ARM HYDRAULIC HOSE	1
9	GA5000117	WASHER 10mm FLAT SS HD	6
GA4914360 GOLDACRES		PRODUCTION DRAWING ONLY, EXHAUST, MUFFLER & MOUNT ASSEMBLY, G4 S2, MY24	REV 00

Combination Cooler, Base Connectors

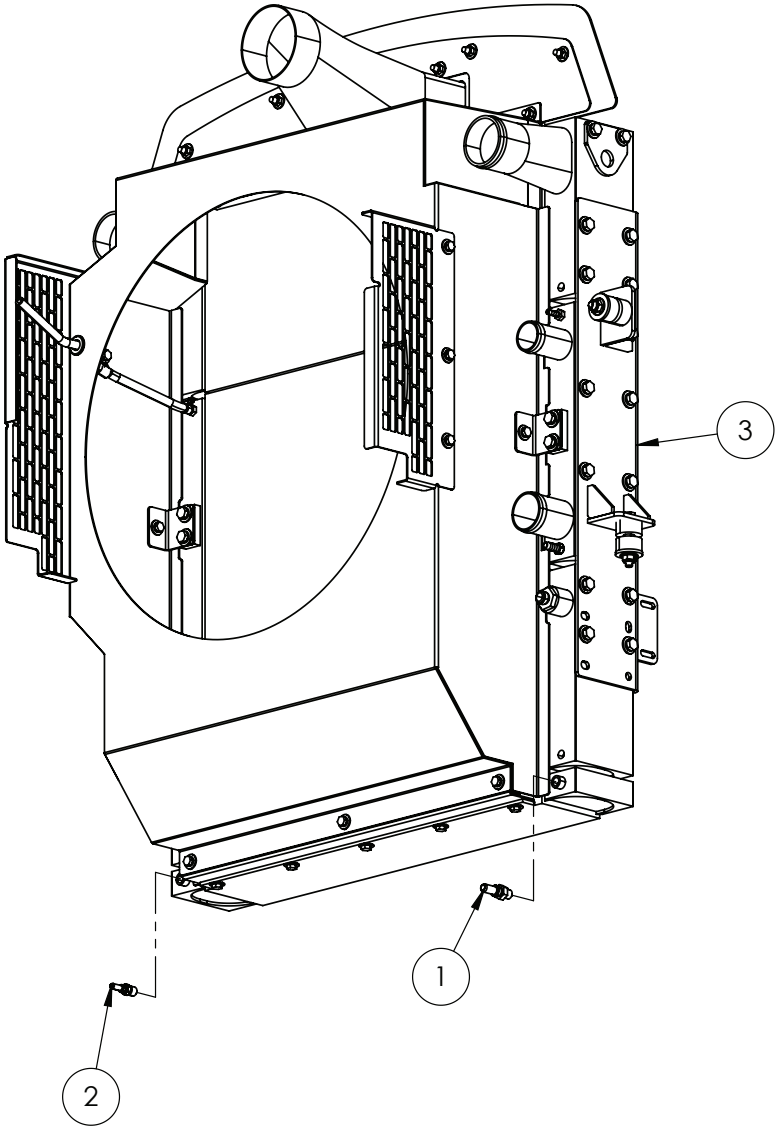

IF DESCRIPTION PREFIX IS ASSEMBLY DRAWING ONLY OR PRODUCTION DRAWING ONLY THE ITEM IS NOT FOR SALE			
ITEM	PART NUMBER	DESCRIPTION	QTY
1	GA4562340	BRASS FITTING, PUSH-TO-CONNECT, STRAIGHT, 1/2 MALE SAE J2044 TO 1/4 BSPT	1
2	GA5078840	BRASS FITTING, PUSH-TO-CONNECT, STRAIGHT, 5/16 MALE SAE J2044 TO 1/4 BSPT	1
3	GA2700145	ENGINE, COOLER/RADIATOR, COMBINATIONAL, KIT, G4, S2	1
GA7800178 GOLDACRES		ASSEMBLY DRAWING ONLY. RADIATOR COMBINATION COOLER, G4 S2, MY24	REV 00.B

Combination Cooler, Hoses

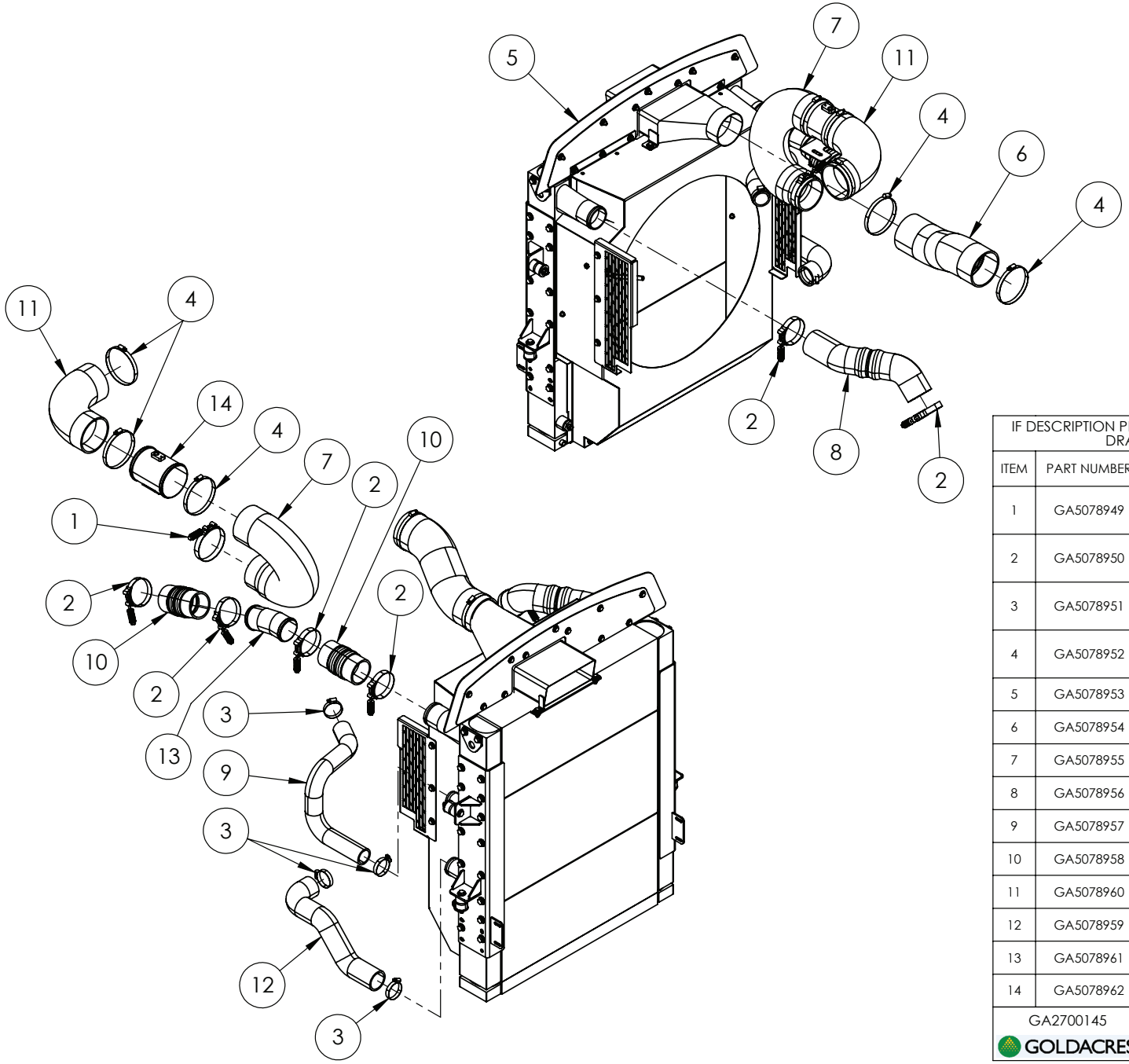

IF DESCRIPTION PREFIX IS ASSEMBLY DRAWING ONLY OR PRODUCTION DRAWING ONLY THE ITEM IS NOT FOR SALE			
ITEM	PART NUMBER	DESCRIPTION	QTY
1	GA5078949	COMBINATION COOLER, CLAMP, CONSTANT TORQUE, STAINLESS STEEL, DIA 106-116mm, 106-116-SS-NA-CLCT, G4 S2	1
2	GA5078950	COMBINATION COOLER, CLAMP, CONSTANT TORQUE, STAINLESS STEEL, DIA 79-89mm, 79-89-SS-NA-CLCT, G4 S2	6
3	GA5078951	COMBINATION COOLER, CLAMP, WORM, STAINLESS STEEL, DIA 46-70mm, 46-70-SS-NA-CLWO, G4 S2	4
4	GA5078952	COMBINATION COOLER, CLAMP, WORM, STAINLESS STEEL, WITH BAND LINER, DIA 117-140mm, 117-140-SS-NA-CLWOBL, G4 S2	5
5	GA5078953	COMBINATION COOLER, COOLING MODULE, CM220618, G4 S2	1
6	GA5078954	COMBINATION COOLER, HOSE, AIR FILTER, HO-130304-52, G4 S2	1
7	GA5078955	COMBINATION COOLER, HOSE, AIR INTAKE TO TURBO, HO220825, G4 S2	1
8	GA5078956	COMBINATION COOLER, HOSE, DIA 76mm, CHARGE AIR, HO-130304-06, G4 S2	1
9	GA5078957	COMBINATION COOLER, HOSE, DIA 58mm, RADIATOR, HO-130304-07, G4 S2	1
10	GA5078958	COMBINATION COOLER, HOSE, HUMP, 3 RING, DIA 76X150MM, HO-130408-01, G4 S2	2
11	GA5078960	COMBINATION COOLER, HOSE, INTAKE TO TURBO, HO220817, G4 S2	1
12	GA5078959	COMBINATION COOLER, HOSE, 76mm DIA, RADIATOR, HO220719, G4 S2	1
13	GA5078961	COMBINATION COOLER, PIPE, CHARGE AIR, DIA 76mm, PI201126, G4 S2	1
14	GA5078962	COMBINATION COOLER, PIPE, 114 DIA, INTAKE AIR , PI220840, G4 S2	1
GA2700145 GOLDACRES		RADIATOR, COMBINATION COOLER, G4, S2	REV 00

Combination Cooler, Intake, Guards & Mounting Hardware

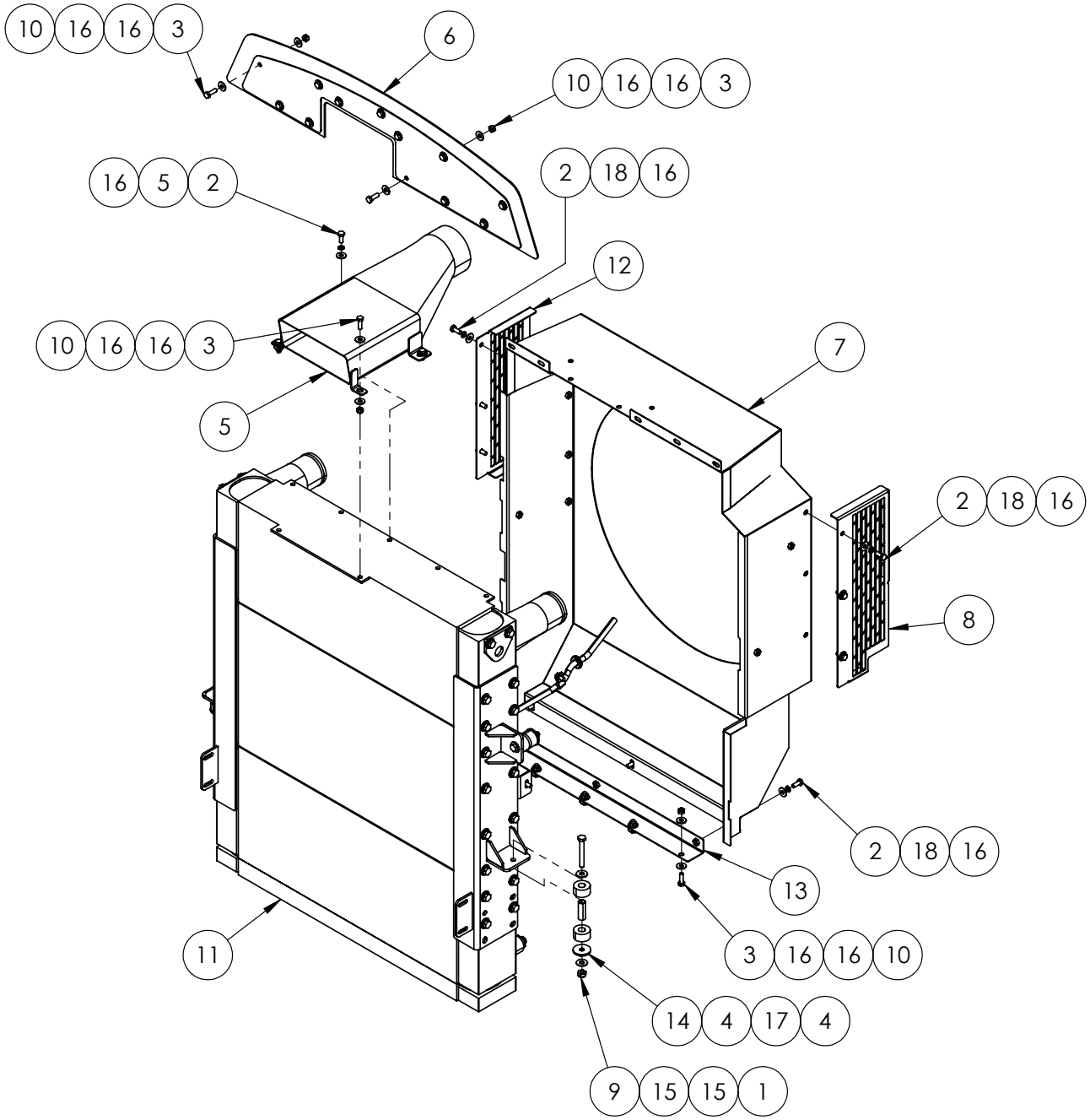

IF DESCRIPTION PREFIX IS ASSEMBLY DRAWING ONLY OR PRODUCTION DRAWING ONLY THE ITEM IS NOT FOR SALE			
ITEM	PART NUMBER	DESCRIPTION	QTY
1	GA5006073	BOLT M10 X 75 GR8.8 ZP	4
2	GA5004085	BOLT M8 X 20 GR8.8 ZP	11
3	GA5004711	BOLT M8 X 25 GR8.8 ZP	19
4	GA2700016	BUSH, ISOLATOR, COMBI COOLER, G3 G4	8
5	GA5078940	COMBINATION COOLER, AIR FILTER INTAKE, PA220912, G4 S2	1
6	GA5078942	COMBINATION COOLER, BONNET AIR WALL, KT220617, G4 S2	1
7	GA5078939	COMBINATION COOLER, FAN SHROUD ASSEMBLY, SH221108, G4 S2	1
8	GA5078943	COMBINATION COOLER, LEFT HAND GAURD, GU221100, G4 S2	1
9	GA5078970	COMBINATION COOLER, NUT, NYLOC M10 ZP, M10-8.8-ZP-HHNN, G4 S2	4
10	GA5078973	COMBINATION COOLER, NUT, NYLOC M8 ZP, M8-8.8-ZP-HHNN, G4 S2	19
11	GA5078938	COMBINATION COOLER, RADIATOR CORE ASSEMBLY, CL-140429-02, G4 S2	1
12	GA5078944	COMBINATION COOLER, RIGHT HAND GAURD, GU221099, G4 S2	1
13	GA5078941	COMBINATION COOLER, SHROUD BOTTOM MOUNT, PA-130304-39, G4 S2	1
14	GA5078963	COMBINATION COOLER, WASHER, ISOLATOR, PA-130304-53, G4 S2	4
15	GA5078969	COMBINATION COOLER, WASHER, PLAIN LARGE 10mm, 10-BS-ZP-FW, G4 S2	8
16	GA5078972	COMBINATION COOLER, WASHER, PLAIN LARGE 8mm, 8-BS-ZP-FW, G4 S2	49
17	GA2700017	SPACER, TUBE, COMBI COOLER, G3 G4	4
18	GA5004919	WASHER 8mm SPRING SS	11
GA5078953 GOLDACRES		COMBINATION COOLER, COOLING MODULE, CM220618, G4 S2	REV 00.C

Combination Cooler, Side Mount & Lifting Lug Hardware

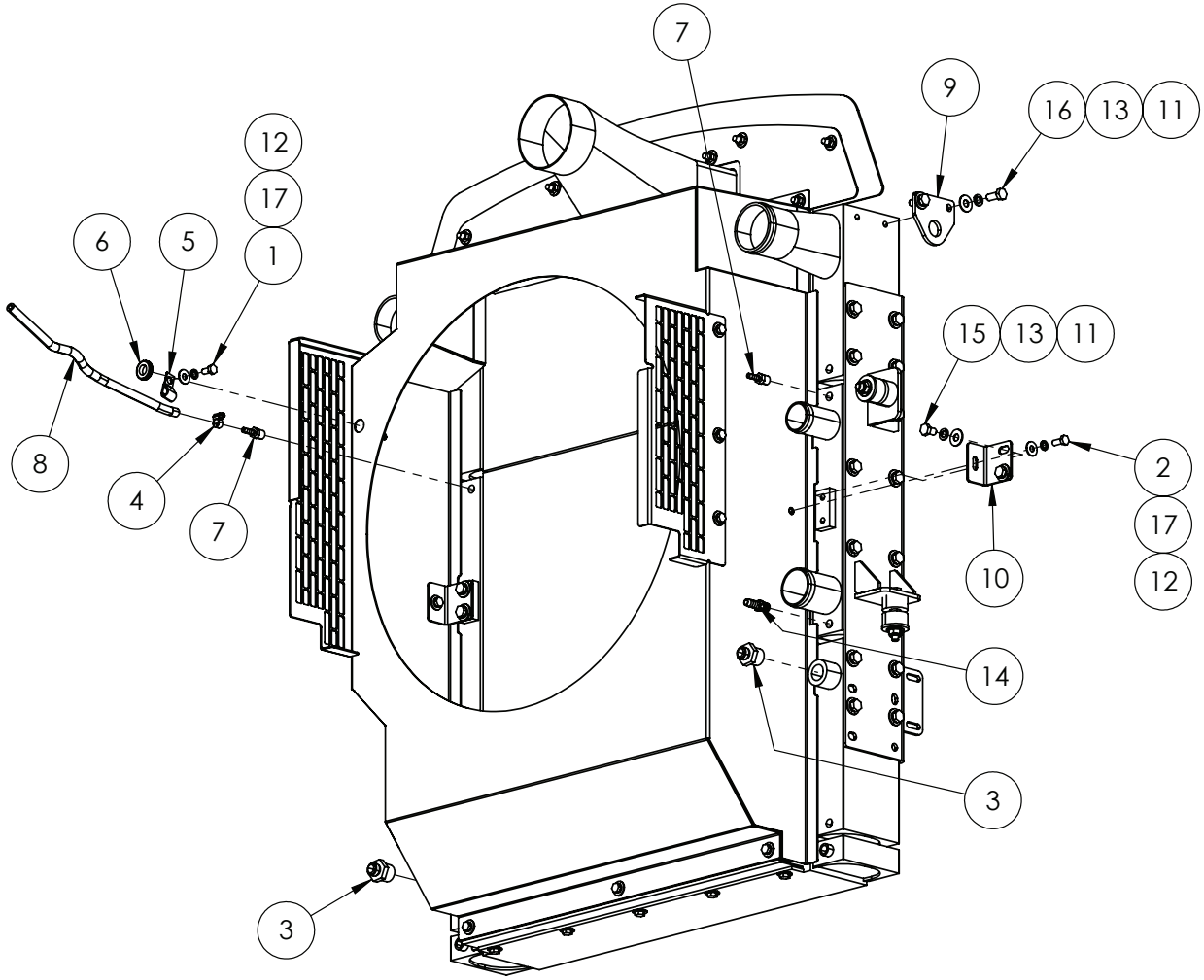

IF DESCRIPTION PREFIX IS ASSEMBLY DRAWING ONLY OR PRODUCTION DRAWING ONLY THE ITEM IS NOT FOR SALE			
ITEM	PART NUMBER	DESCRIPTION	QTY
1	GA5011465	BOLT M8 X 16 GR8.8 ZP	1
2	GA5004085	BOLT M8 X 20 GR8.8 ZP	2
3	GA5078971	COMBINATION COOLER, ADAPTOR, STRAIGHT 3/4BSP - 3/4JIC, JIC34-BSP34-ST-NP-NIH, G4 S2	2
4	GA5078968	COMBINATION COOLER, CLAMP, WORM, STAINLESS STEEL, DIA 6-16mm, 6-16-SS-NA-CLWO, G4 S2	1
5	GA5078965	COMBINATION COOLER, CLIP P, ZINC PLATE, 13-85-ST-ZP-CMP, G4 S2	1
6	GA5078966	COMBINATION COOLER, GROMMET, RUBBER, PA-150707-04, G4 S2	1
7	GA5078964	COMBINATION COOLER, HOSE BARB, NPT SS, NPT14-14-316-NA-HBMP, G4 S2	2
8	GA5078967	COMBINATION COOLER, HOSE, RADIATOR VENT LEFT, 6.4mm, G4 S2	1
9	GA5078947	COMBINATION COOLER, LIFTING LUG, LL110921A, G4 S2	2
10	GA5078945	COMBINATION COOLER, SHROUD SIDE MOUNT, KT220617, G4 S2	2
11	GA5078969	COMBINATION COOLER, WASHER, PLAIN LARGE 10mm, 10-BS-ZP-FW, G4 S2	8
12	GA5078972	COMBINATION COOLER, WASHER, PLAIN LARGE 8mm, 8-BS-ZP-FW, G4 S2	3
13	GA5078974	COMBINATION COOLER, WASHER, SPRING 10mm, 10-ST-ZP-SW, G4 S2	8
14	GA5050725	HOSETAIL BRASS P3 1/4 THREAD X 3/8 BARB	1
15	GA5006143	SET SCREW M10 X 16 GR8.8 ZP	4
16	GA5006161	SET SCREW M10 X 25 GR8.8 ZP	4
17	GA5004919	WASHER 8mm SPRING SS	3
GA5078953 GOLDACRES		COMBINATION COOLER, COOLING MODULE, CM220618, G4 S2	REV 00.C

16 - Driveline

Front Axle to Chassis Mounting

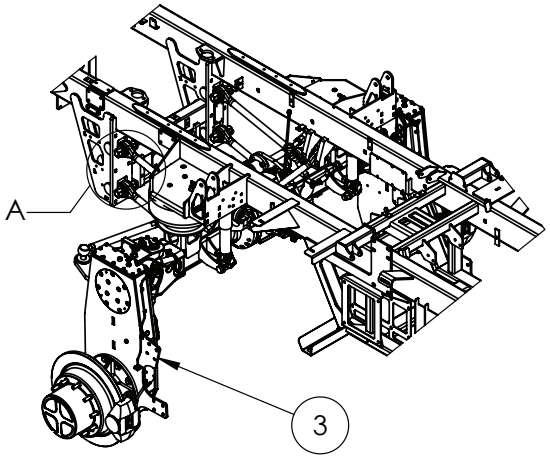

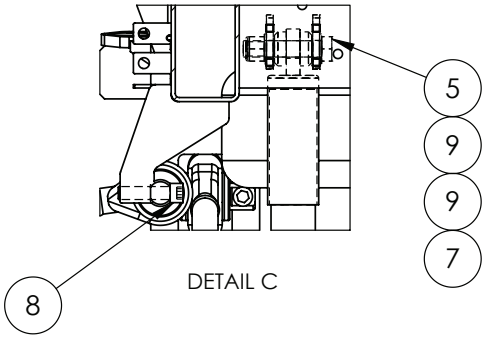

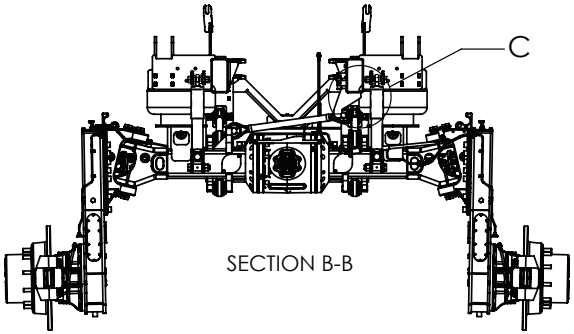

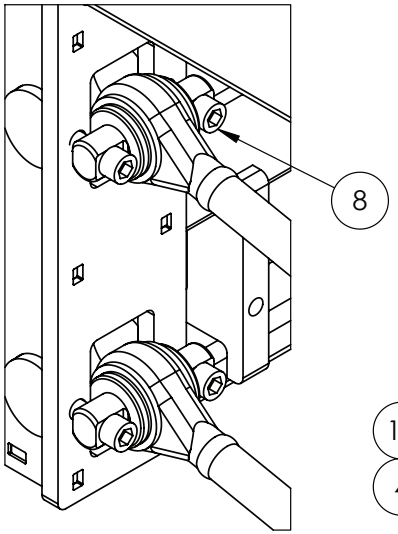

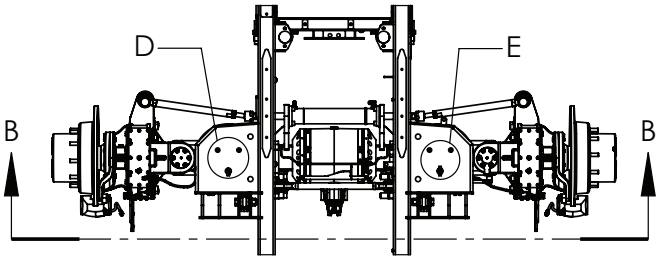

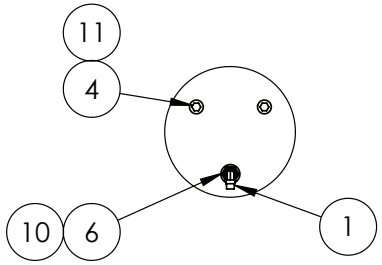

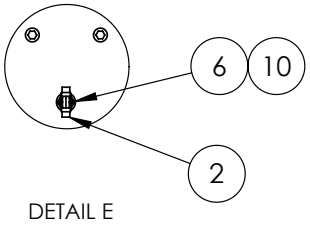

IF DESCRIPTION PREFIX IS ASSEMBLY DRAWING ONLY OR PRODUCTION DRAWING ONLY THE ITEM IS NOT FOR SALE			
ITEM	PART NUMBER	DESCRIPTION	QTY
1	GA5078518	AIR FITTING, ELBOW, SWIVEL, 3/8" TUBE, 1/4" NPT MALE, PUSH IN, BRASS, ALKON - AQ69-DOTS-6X4	1
2	GA5078515	AIR FITTING, TEE, 3/8" TUBE, 1/4" NPT MALE, PUSH IN, BRASS, ALKON - AQ72-DOT-6X4	1
3	GA4951925	ASSEMBLY DRAWING ONLY. FRONT AXLE, 4X4 ASSY, 3000mm WIDE, G4 S2, MY24	1
4	GA5002601	BOLT 3/8 UNC X 1 GR8 ZP YELLOW	4
5	GA5011346	BOLT M24 X 115 GR8.8 ZP SPECIAL 75 TO 77mm SHANK	2
6	GA5049495	NUT 3/4 UNF NYLOC ZP	2
7	GA5012469	NUT M24 NYLOC ZP	2
8	GA5053150	SHCS 3/4 UNF x 3 GR12.9 ZP Blue	10
9	GA5001891	WASHER 24mm FLAT HD SS	4
10	GA5069790	WASHER 3/4 X OD 1 3/8 HT ZINC YELLOW	2
11	GA5002565	WASHER 3/8 ID X 1 OD FLAT SS	4
GA7800193 GOLDACRES		ASSEMBLY DRAWING ONLY, FRONT AXLE, CHASSIS MOUNT, G4 S2, MY24	REV 01

Rear Axle to Chassis Mounting

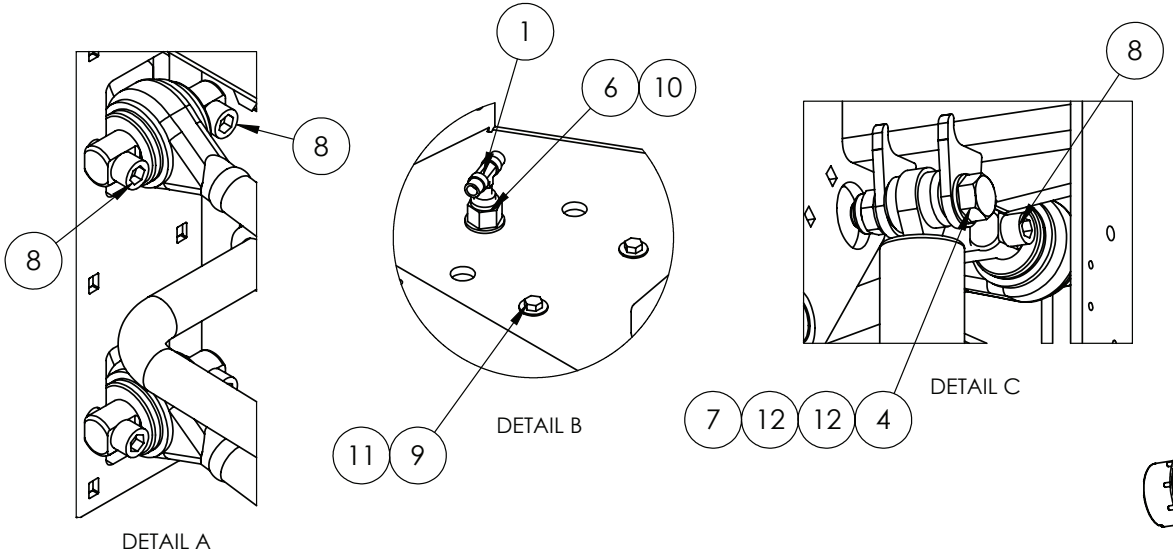

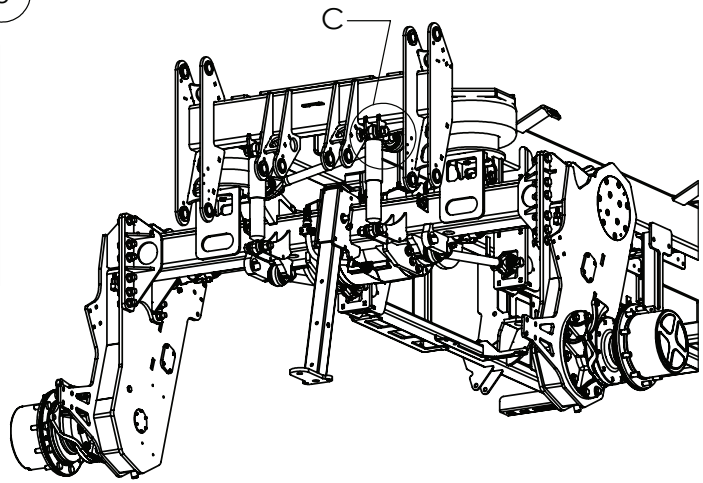

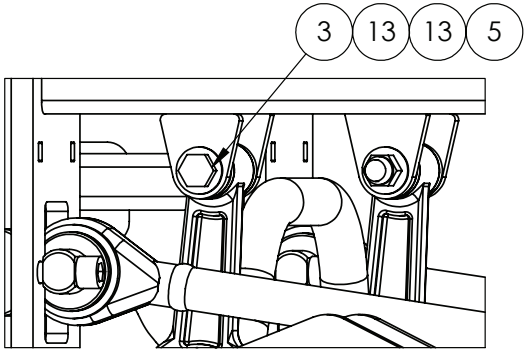

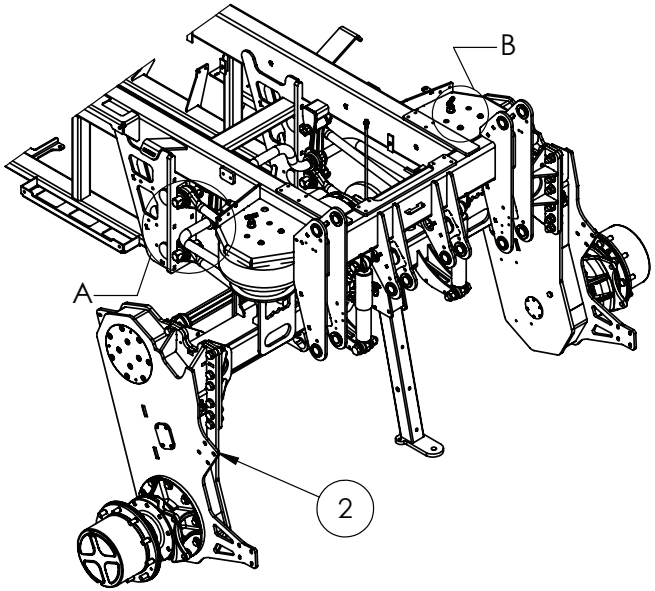

IF DESCRIPTION PREFIX IS ASSEMBLY DRAWING ONLY OR PRODUCTION DRAWING ONLY THE ITEM IS NOT FOR SALE			
ITEM	PART NUMBER	DESCRIPTION	QTY
1	GA5078515	AIR FITTING, TEE, 3/8" TUBE, 1/4" NPT MALE, PUSH IN, BRASS, ALKON - AQ72-DOT-6X4	2
2	GA4951910	ASSEMBLY DRAWING ONLY. REAR AXLE , 2X4 AND 4X4 ASSY, 3000mm WIDE, G4 S2, MY24	1
3	GA5002487	BOLT 3/4" UNC X 6"	2
4	GA5011346	Bolt M24 x 115 GR8.8 ZP 75-77mm Shank	2
5	GA5048430	NUT 3/4 UNC NYLOC ZP	2
6	GA5049495	NUT 3/4 UNF NYLOC ZP	2
7	GA5012469	Nut M24 Nyloc ZP	2
8	GA5053150	SHCS 3/4 UNF x 3 GR12.9 ZP Blue	10
9	GA5002599	SET SCREW 3/8 X 1 1/4 UNC S/STEEL	4
10	GA5069790	WASHER 3/4 X OD 1 3/8 HT ZINC YELLOW	2
11	GA5002565	WASHER 3/8 ID X 1 OD FLAT SS	4
12	GA5001891	Washer M24 Flat HD SS	4
13	GA5001045	WASHER, 3/4" FLAT, HD ZP	4
GA7800192 GOLDACRES		ASSEMBLY DRAWING ONLY, REAR AXLE, CHASSIS MOUNT, G4 S2, MY24	REV 01.A

Front Axle, 2WD, 2mt, Fixed

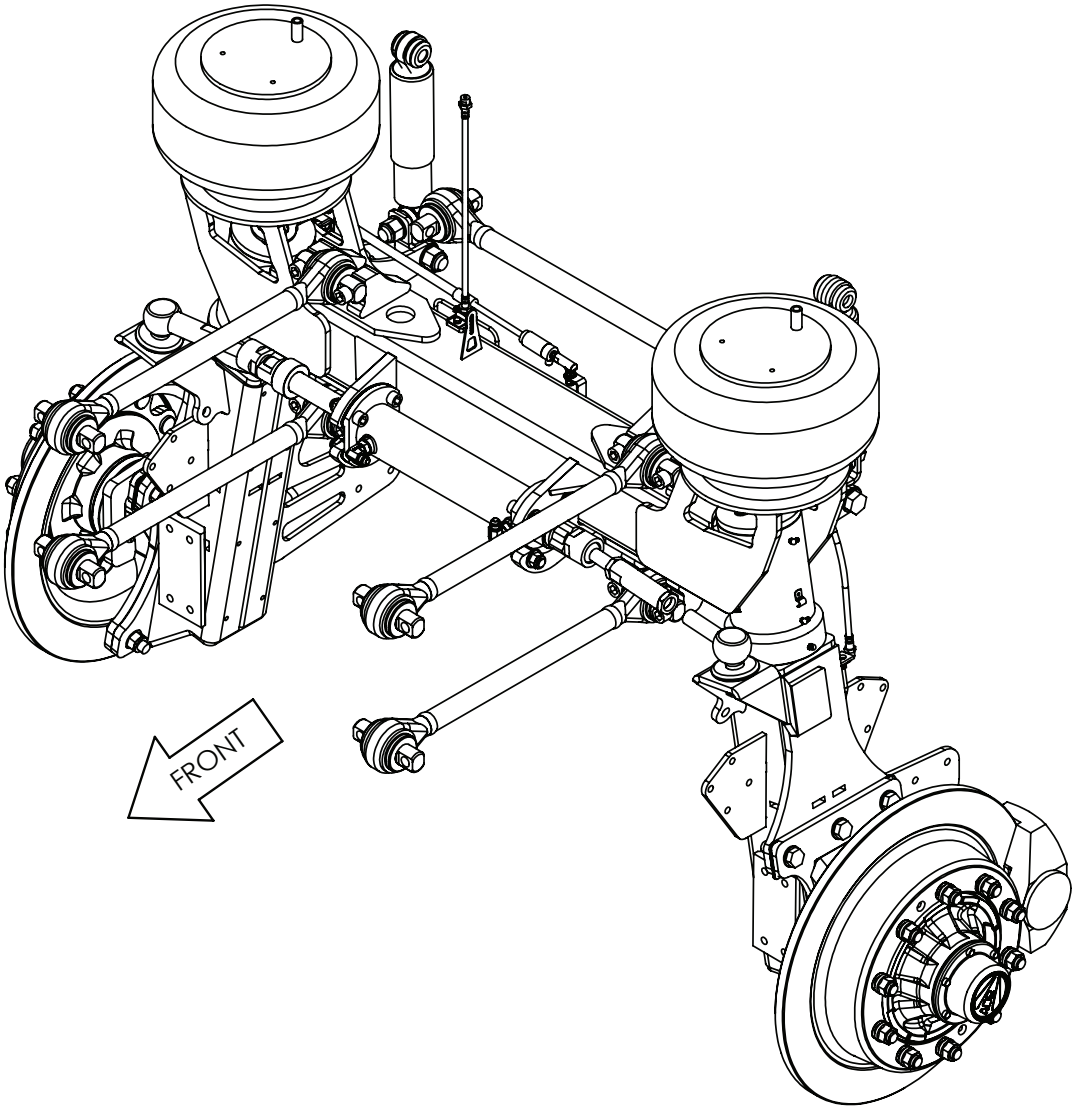

BUILD OPTIONS:
40071 - WHEEL TRACK 2000mm FIXED

GA4951935 GOLDACRES	ASSEMBLY DRAWING ONLY. FRONT AXLE, 2X4 ASSY, 2000mm WIDE, G4 S2 MY24	REV 00

Front Axle, 2WD, 2mt, Fixed, King Pin Assembly

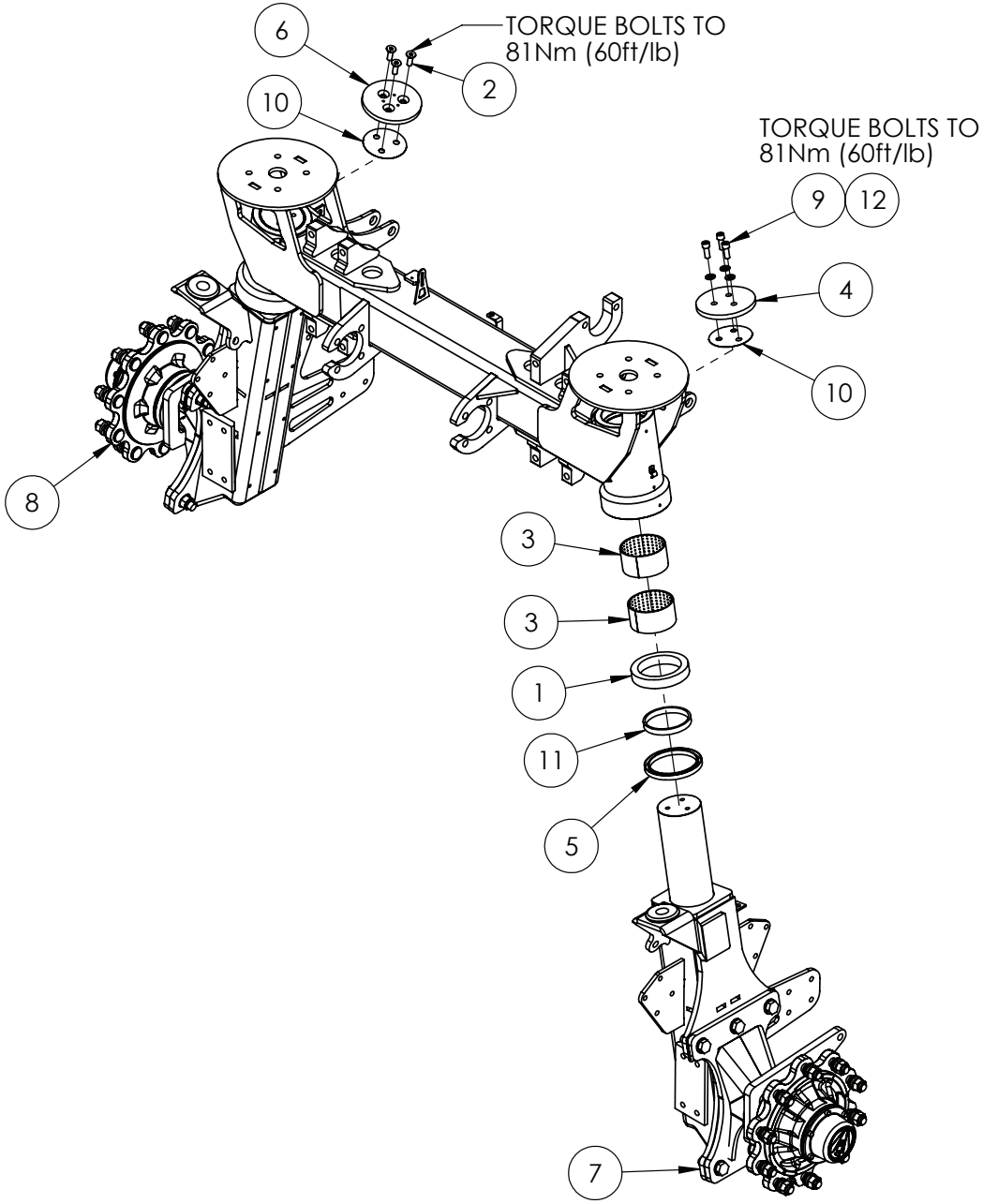

IF DESCRIPTION PREFIX IS ASSEMBLY DRAWING ONLY OR PRODUCTION DRAWING ONLY THE ITEM IS NOT FOR SALE			
ITEM	PART NUMBER	DESCRIPTION	QTY
1	GA5048245	BEARING BALL THRUST 51122	2
2	GA5069080	CSCS M12 X 35 GR12.9 ZP	3
3	GA5009454	GLACIER BUSH - M LINER 110	4
4	2M-FA011LAS	KING PIN RETAINING CAP, BOLT ON	1
5	GA5048635	OIL SEAL 145 X 120 X 12	2
6	GA4415325	PLATE, KING PIN RETAINING CAP, BOLT ON, STEER ANGLE, ADJUSTIBLE AXLES, FRONT, G4 S2	1
7	GA4952670	PRODUCTION DRAWING ONLY. DROP LEG, LHS, CAMBER ADJUSTIBLE, FRONT 2WD, G4 S2 MY24	1
8	GA4952675	PRODUCTION DRAWING ONLY. DROP LEG, RHS, CAMBER ADJUSTIBLE, FRONT 2WD, G4 S2 MY24	1
9	GA5000307	SHCS M12 X 30 GR12.9 ZP	3
10	F70544A	SHIM PLATE FOR 2WD FRONT AXLES	2
11	2MFA004-IGR	SPACER RING/THRUST BEARING MOUNT FOR 2WD FRONT AXLES	2
12	GA5000577	WASHER 12mm FLAT SS HD	3
GA4951935-02 GOLDACRES		ASSEMBLY DRAWING ONLY. FRONT AXLE, 2X4 ASSY, 2000mm WIDE, G4 S2 MY24	REV 00

Front Axle, 2WD, 2mt, Fixed, Linear Sensor & Brake Line Assembly

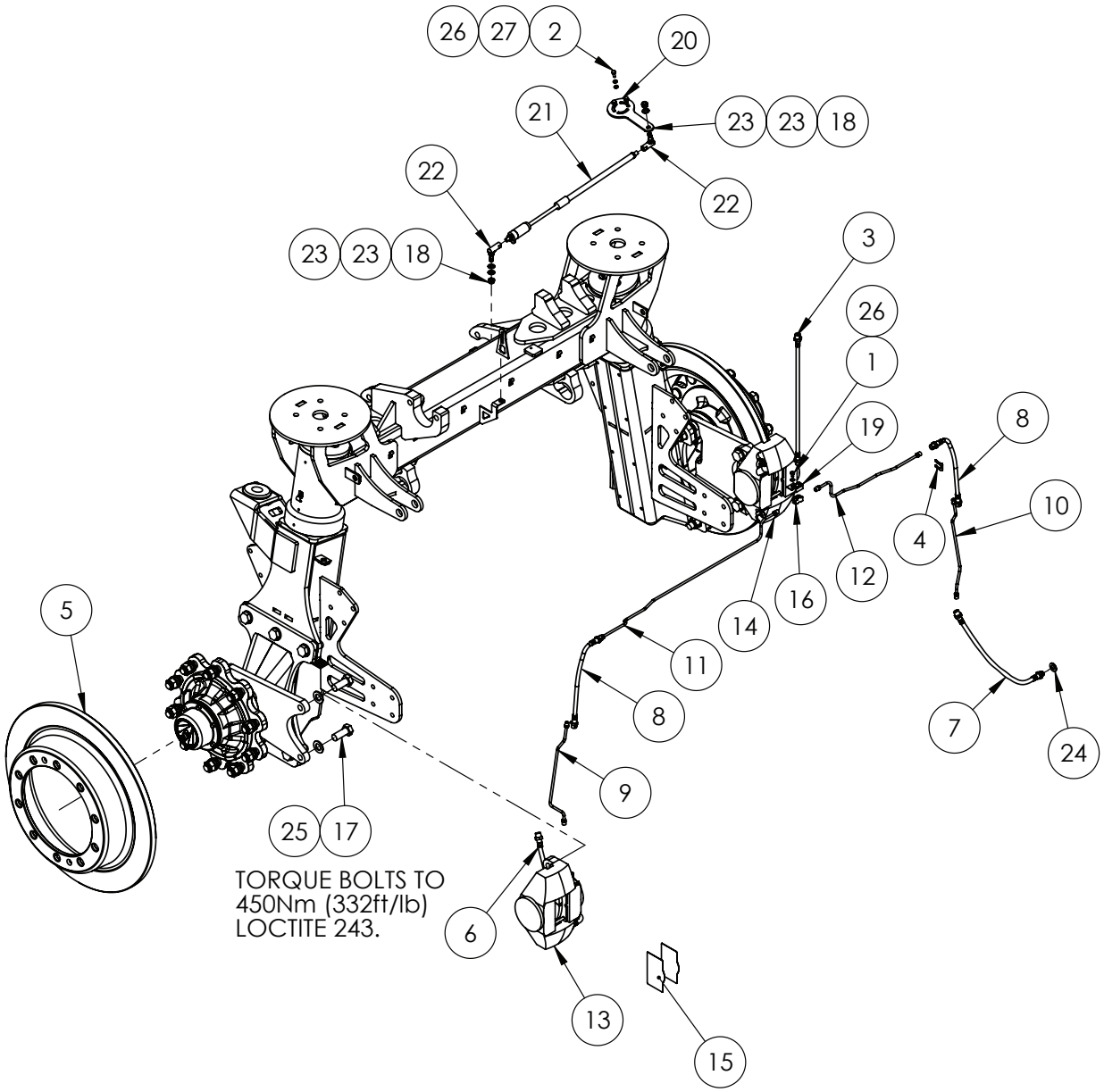

IF DESCRIPTION PREFIX IS ASSEMBLY DRAWING ONLY OR PRODUCTION DRAWING ONLY THE ITEM IS NOT FOR SALE			
ITEM	PART NUMBER	DESCRIPTION	QTY
1	GA5004029	BOLT M6 X 10 GR8.8 ZP	1
2	GA5004041	BOLT M6 X 16 GR8.8 ZP	3
3	GA5025923	BRAIDED BRAKE HOSE, CHASSIS TO AXLE, STD AXLE, 470mm LONG, DOT 4	1
4	GA5025917	BRAKE CLIP, BRAIDED BRAKE LINE, DOT 4	6
5	GA5070066	BRAKE DISC ROTOR, CAST, 335 PCD, 600mm OD, 292 CENTRE BORE, G4 4WD	2
6	GA5025919	BRAKE HOSE, DROP LEG TO CALIPER, 470mm, DOT 4	1
7	GA5025919	BRAKE HOSE, DROP LEG TO CALIPER, 470mm, DOT 4	1
8	GA5025921	BRAKE HOSE, FRONT AXLE TO DROPLEG, 515mm LONG	2
9	GA4954050	BRAKE LINE, FIXED AXLE, FRONT, DROP LEG, LHS, G4 S2	1
10	GA4954045	BRAKE LINE, FIXED AXLE, FRONT, DROP LEG, RHS, G4 S2	1
11	GA4954060	BRAKE LINE, FIXED AXLE, 2m, FRONT, CENTRE, LHS, G4 S2	1
12	GA4954055	BRAKE LINE, RHS, FIXED AXLE, 2m, FRONT, CENTRE, RHS, G4 S2	1
13	GA5016069	BRAKE CALIPER, 2 X 75mm, SUIT BRAKE FLUID, STILFRENI	1
14	GA5016069	BRAKE CALIPER, 2 X 75mm, SUIT BRAKE FLUID, STILFRENI	1
15	GA5055645	BRAKE PAD BACKING, ANTI SQUEAL, SELF ADHESIVE, PACK OF 4, SUIT SELF PROPELLED	4
16	GA5008793	FLARE TEE	1
17	GA5001515	M20X1.5PX50 HT BOLT	4
18	GA5000141	NUT M10 NYLOC ZP	2
19	GA4415490	PLATE, BRACKET, T PIECE MOUNTING, BRAKE LINES	1
20	GA4415365	PLATE, STEER ANGLE SENSOR, FRONT AXLE, OUTER KING PIN MOUNTED, G4 S2	1
21	GA3000144	SENSOR, LINEAR NON CONTACT, STEERING, 250mm, RAVEN	1
22	GA3000146	STUD END, M10 SUIT GA3000144, RAVEN	2
23	GA5000117	WASHER 10mm FLAT SS HD	4
24	GA5007475	WASHER 12 X 22mm COPPER	2
25	GA5001741	WASHER 20mm FLAT SS HD	4
26	GA5004437	WASHER 6mm FLAT SS	4
27	GA5004447	WASHER 6mm SPRING SS	3
GA4951935-03 GOLDACRES	ASSEMBLY DRAWING ONLY. FRONT AXLE, 2X4 ASSY, 2000mm WIDE, G4 S2 MY24		REV 00.B

Front Axle, 2WD, 2mt, Fixed, Steering Cylinder Assembly

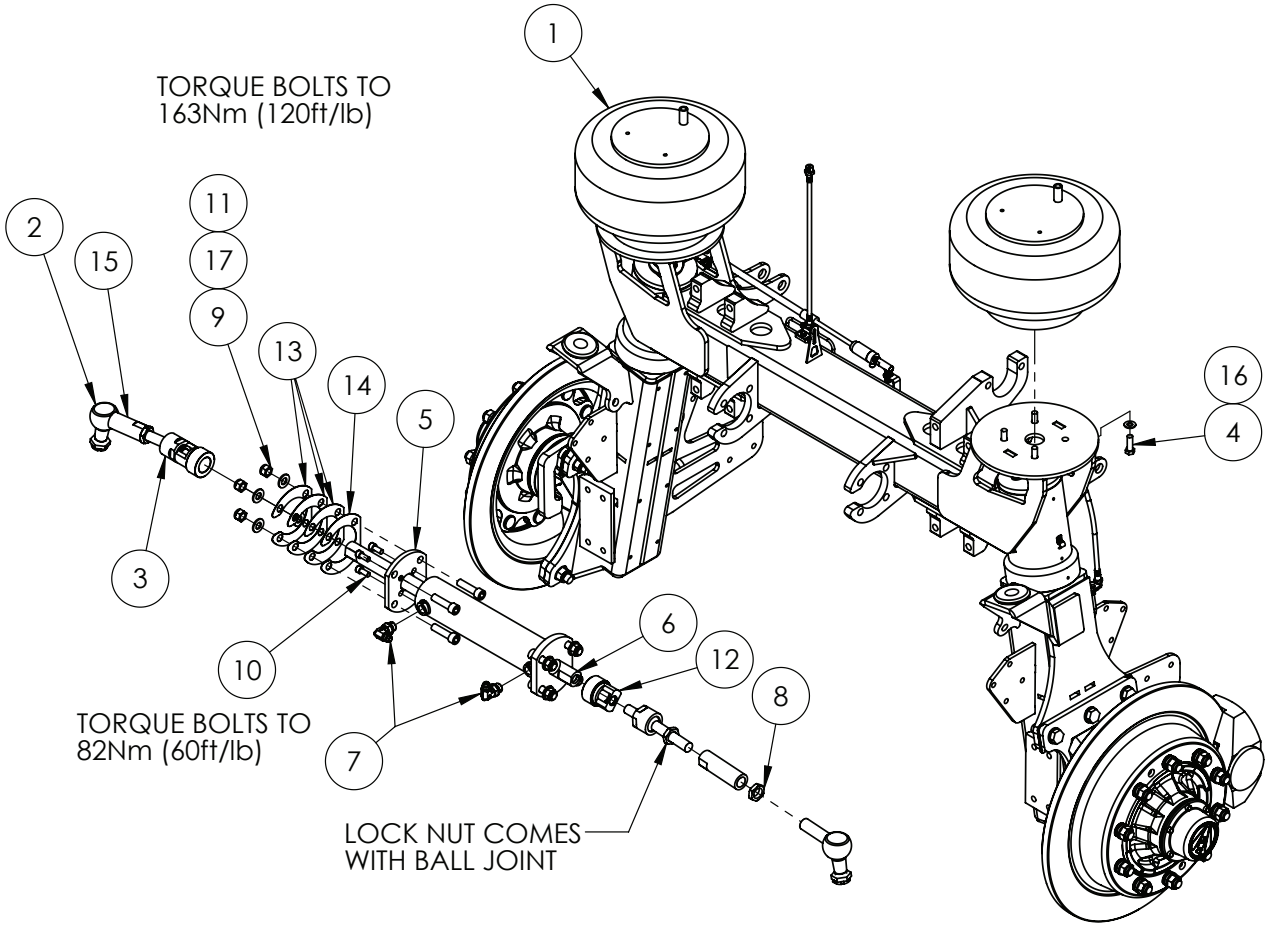

IF DESCRIPTION PREFIX IS ASSEMBLY DRAWING ONLY OR PRODUCTION DRAWING ONLY THE ITEM IS NOT FOR SALE			
ITEM	PART NUMBER	DESCRIPTION	QTY
1	GA5005311	AIR SPRING HT230 SINGLE AIR STUD	2
2	GA5065041	BALL JOINT, RIGHT ANGLE, M28X1.5	2
3	GA5065045	BALL JOINT, INLINE, M24 X 1.5 PITCH X M22 X 1.5 PITCH	2
4	GA5006167	BOLT 1/2 UNC X 1 1/2 GR8 ZP	8
5	GA4514635	FLANGE PLATE FOR STEERING RAM	1
6	GA5066586	HYDRAULIC CYLINDER, BORE 3", ROD 1.5", STROKE 7.5", STEERING	1
7	GA3500761	HYDRAULIC ADAPTOR, ELBOW, 7/8" UNO TO 3/4" JIC, 90 DEG, S91-1214	2
8	GA4572170	LOCK NUT, M28 X 1.5, SUIT TIE ROD END	2
9	GA5001029	NUT M16 NYLOC ZP	8
10	GA5070250	SHCS 7/16 UNF X 1 GR12.9 ZP	4
11	GA5048680	SHCS M16 X 60 GR12.9 ZP	8
12	GA4550155	STEERING STOP, SHORT, 2m WITH 520 TYRES, G3 G4	2
13	GA4514640	STEERING RAM SHIM PLATE	3
14	GA4000490	STEERING RAM SHIM PLATE 0.5mm	1
15	GA4572156	TIE ROD FOR 2m STD FRONT AXLE HEAVY	2
16	GA5017673	WASHER 1/2" HIGH TENSILE	8
17	GA5001043	WASHER 16mm FLAT SS HD	8
GA4951935-04 GOLDACRES		ASSEMBLY DRAWING ONLY. FRONT AXLE, 2X4 ASSY, 2000mm WIDE, G4 S2 MY24	REV 00.C

Front Axle, 2WD, Fixed, 2mt, Torque Rod & Shock Absorber Mounting

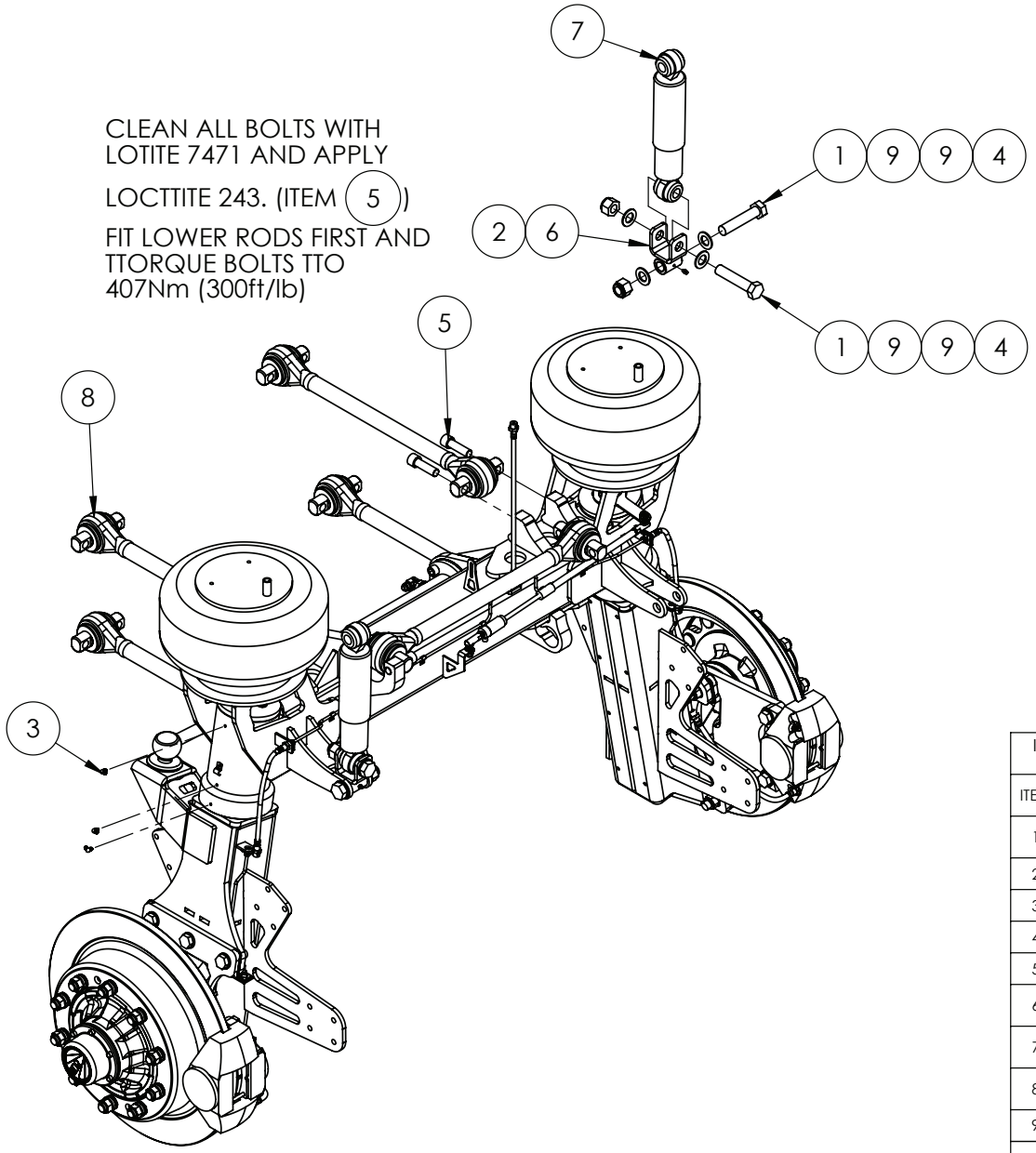

IF DESCRIPTION PREFIX IS ASSEMBLY DRAWING ONLY OR PRODUCTION DRAWING ONLY THE ITEM IS NOT FOR SALE			
ITEM	PART NUMBER	DESCRIPTION	QTY
1	GA5011346	BOLT M24 X 115 GR8.8 ZP SPECIAL 75 TO 77mm SHANK	4
2	GA5050450	GREASE NIPPLE, 6mm	2
3	GA5009637	GREASE NIPPLE, ELBOW, 90 DEGREE, 1/4" UNF MALE	6
4	GA5012469	NUT M24 NYLOC ZP	4
5	GA5053145	SHCS 3/4 UNF X 2 1/2 GR12.9 ZP BLUE	10
6	GA4660670	SHOCK ABSORBER MOUNT, FRONT AXLE, SELF PROPELLED 2015	2
7	GA2500000	SHOCK ABSORBER, SUSPENSION DAMPER, BLACK, MONROE	2
8	GA5068850	SUSPENSION LINK, TORQUE ROD, 650mm CENTRE, HOLLOW, ATRO	5
9	GA5001891	WASHER 24mm FLAT HD SS	8
GA4951935-05 GOLDACRES		ASSEMBLY DRAWING ONLY. FRONT AXLE, 2X4 ASSY, 2000mm WIDE, G4 S2 MY24	REV 00.B

Front Axle, 2WD, 3mt, Fixed

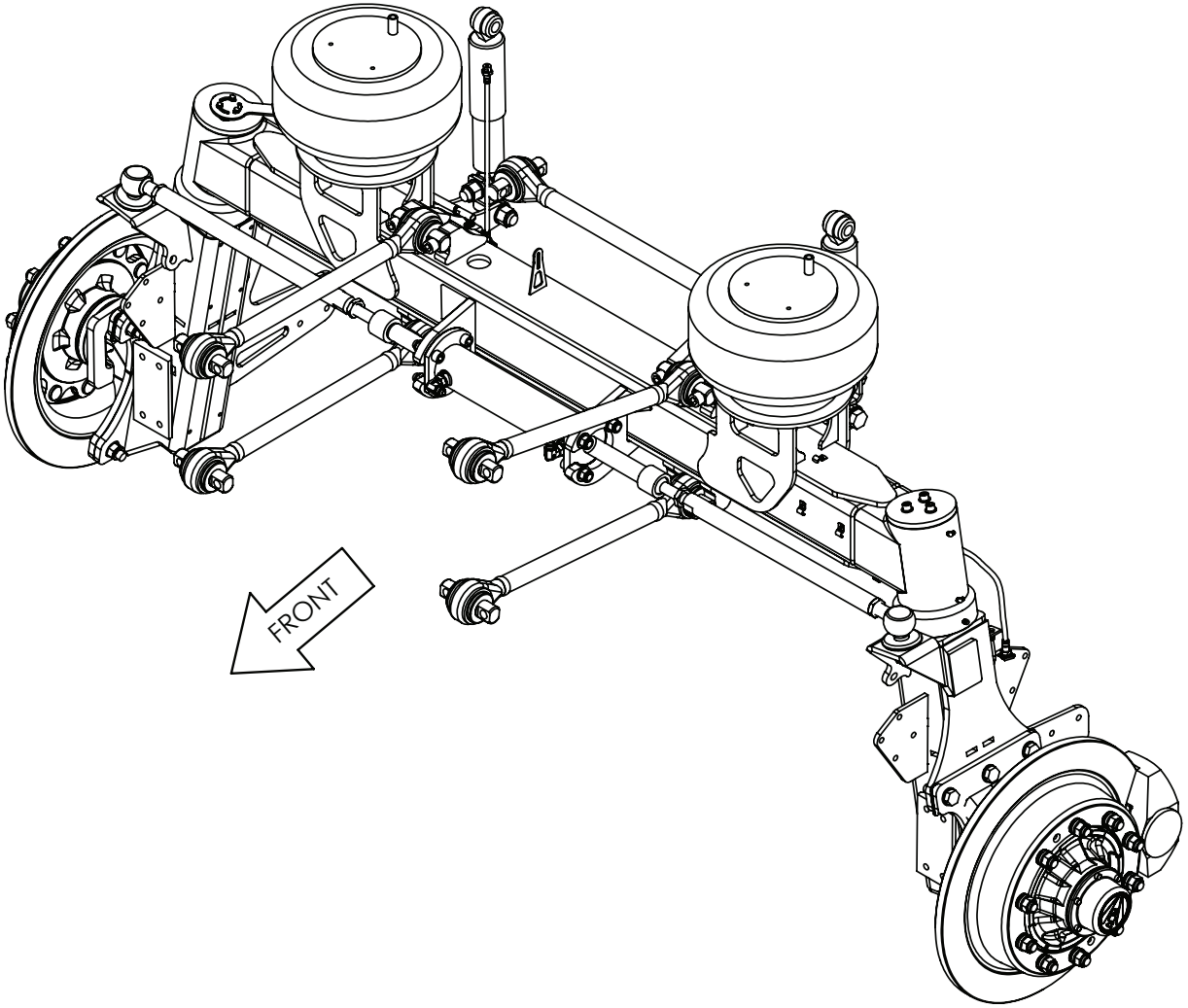

BUILD OPTIONS:
40069 - WHEEL TRACK 3000mm FIXED

GA4951930 GOLDACRES	ASSEMBLY DRAWING ONLY. FRONT AXLE, 2X4 ASSY, 3000mm WIDE, G4 S2 MY24	REV 00

Front Axle, 2WD, 3mt, Fixed, King Pin Assembly

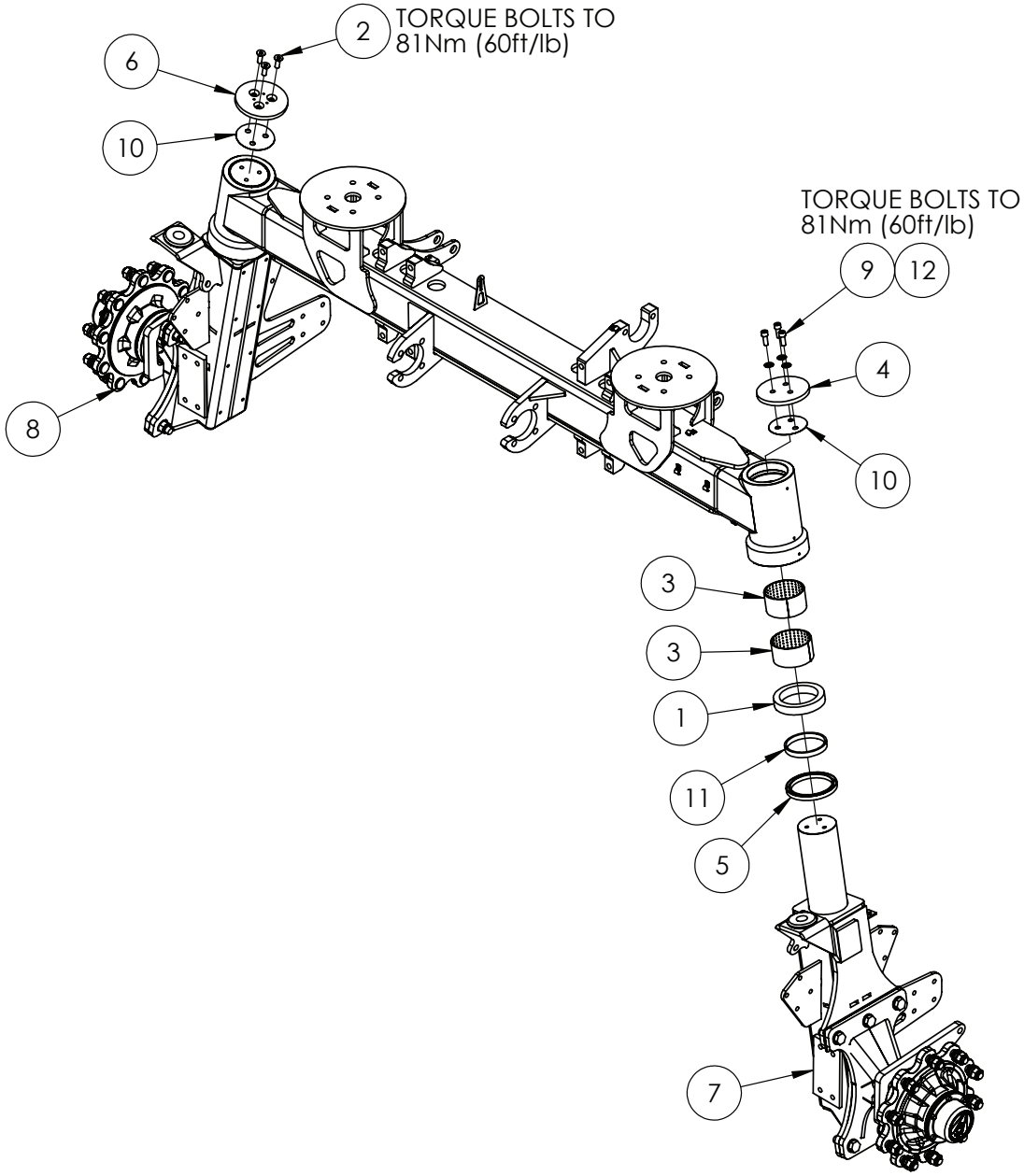

IF DESCRIPTION PREFIX IS ASSEMBLY DRAWING ONLY OR PRODUCTION DRAWING ONLY THE ITEM IS NOT FOR SALE			
ITEM	PART NUMBER	DESCRIPTION	QTY
1	GA5048245	BEARING BALL THRUST 51122	2
2	GA5069080	CSCS M12 X 35 GR12.9 ZP	3
3	GA5009454	GLACIER BUSH - M LINER 110	4
4	2M-FA011LAS	KING PIN RETAINING CAP, BOLT ON	1
5	GA5048635	OIL SEAL 145 X 120 X 12	2
6	GA4415325	PLATE, KING PIN RETAINING CAP, BOLT ON, STEER ANGLE, ADJUSTIBLE AXLES, FRONT, G4 S2	1
7	GA4952670	PRODUCTION DRAWING ONLY. DROP LEG, LHS, CAMBER ADJUSTIBLE, FRONT 2WD, G4 S2 MY24	1
8	GA4952675	PRODUCTION DRAWING ONLY. DROP LEG, RHS, CAMBER ADJUSTIBLE, FRONT 2WD, G4 S2 MY24	1
9	GA5000307	SHCS M12 X 30 GR12.9 ZP	3
10	F70544A	SHIM PLATE FOR 2WD FRONT AXLES	2
11	2MFA004-IGR	SPACER RING/THRUST BEARING MOUNT FOR 2WD FRONT AXLES	2
12	GA5017655	WASHER 1/2 FLAT SS	3
GA4951930-02 GOLDACRES		ASSEMBLY DRAWING ONLY. FRONT AXLE, 2X4 ASSY, 3000mm WIDE, G4 S2 MY24	REV 00

Front Axle, 2WD, 3mt, Fixed, Linear Sensor & Brake Line Assembly

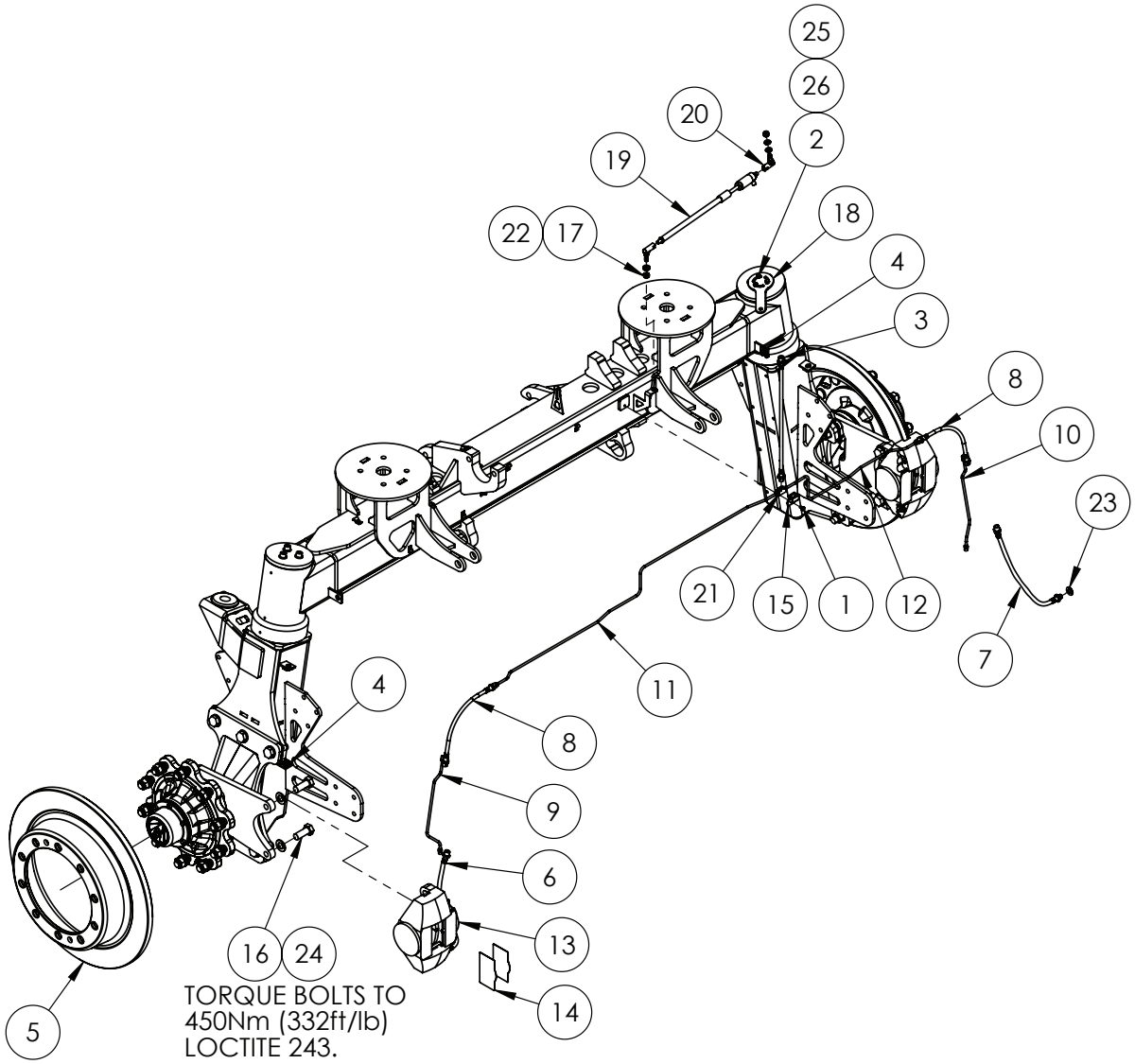

IF DESCRIPTION PREFIX IS ASSEMBLY DRAWING ONLY OR PRODUCTION DRAWING ONLY THE ITEM IS NOT FOR SALE			
ITEM	PART NUMBER	DESCRIPTION	QTY
1	GA5004029	BOLT M6 X 10 GR8.8 ZP	1
2	GA5004041	BOLT M6 X 16 GR8.8 ZP	3
3	GA5025923	BRAIDED BRAKE HOSE, CHASSIS TO AXLE, STD AXLE, 470mm LONG, DOT 4	1
4	GA5025917	BRAKE CLIP, BRAIDED BRAKE LINE, DOT 4	6
5	GA5070066	BRAKE DISC ROTOR, CAST, 335 PCD, 600mm OD, 292 CENTRE BORE, G4 4WD	2
6	GA5025919	BRAKE HOSE, DROP LEG TO CALIPER, 470mm, DOT 4	1
7	GA5025919	BRAKE HOSE, DROP LEG TO CALIPER, 470mm, DOT 4	1
8	GA5025921	BRAKE HOSE, FRONT AXLE TO DROPLEG, 515mm LONG	2
9	GA4954050	BRAKE LINE, FIXED AXLE, FRONT, DROP LEG, LHS, G4 S2	1
10	GA4954045	BRAKE LINE, FIXED AXLE, FRONT, DROP LEG, RHS, G4 S2	1
11	GA4954040	BRAKE LINE, FIXED AXLE, 3m, FRONT, CENTRE, LHS, G4 S2	1
12	GA4954035	BRAKE LINE, FIXED AXLE, 3m, FRONT, CENTRE, RHS, G4 S2	1
13	GA5016069	BRAKE CALIPER, 2 X 75mm, SUIT BRAKE FLUID, STILFRENI	2
14	GA5055645	BRAKE PAD BACKING, ANTI SQUEAL, SELF ADHESIVE, PACK OF 4, SUIT SELF PROPELLED	4
15	HYD002LAS	CLAMP BRACKET, HYDRAULIC FITTING	1
16	GA5001515	M20X1.5PX50 HT BOLT	4
17	GA5000141	NUT M10 NYLOC ZP	2
18	GA4415365	PLATE, STEER ANGLE SENSOR, FRONT AXLE, OUTER KING PIN MOUNTED, G4 S2	1
19	GA3000144	SENSOR, LINEAR NON CONTACT, STEERING, 250mm, RAVEN	1
20	GA3000146	STUD END, M10 SUIT GA3000144, RAVEN	2
21	GA5008793	TEE, FLARE, 7/16" 24 TPI FEMALE THREAD, SUIT 1/4" TUBE	1
22	GA5000117	WASHER 10mm FLAT SS HD	4
23	GA5007475	WASHER 12 X 22mm COPPER	2
24	GA5001741	WASHER 20mm FLAT SS HD	4
25	GA5004437	WASHER 6mm FLAT SS	3
26	GA5004447	WASHER 6mm SPRING SS	3
GA4951930-03 GOLDACRES	ASSEMBLY DRAWING ONLY. FRONT AXLE, 2X4 ASSY, 3000mm WIDE, G4 S2 MY24		REV 00.C

Front Axle, 2WD, 3mt, Fixed, Steering Cylinder Assembly

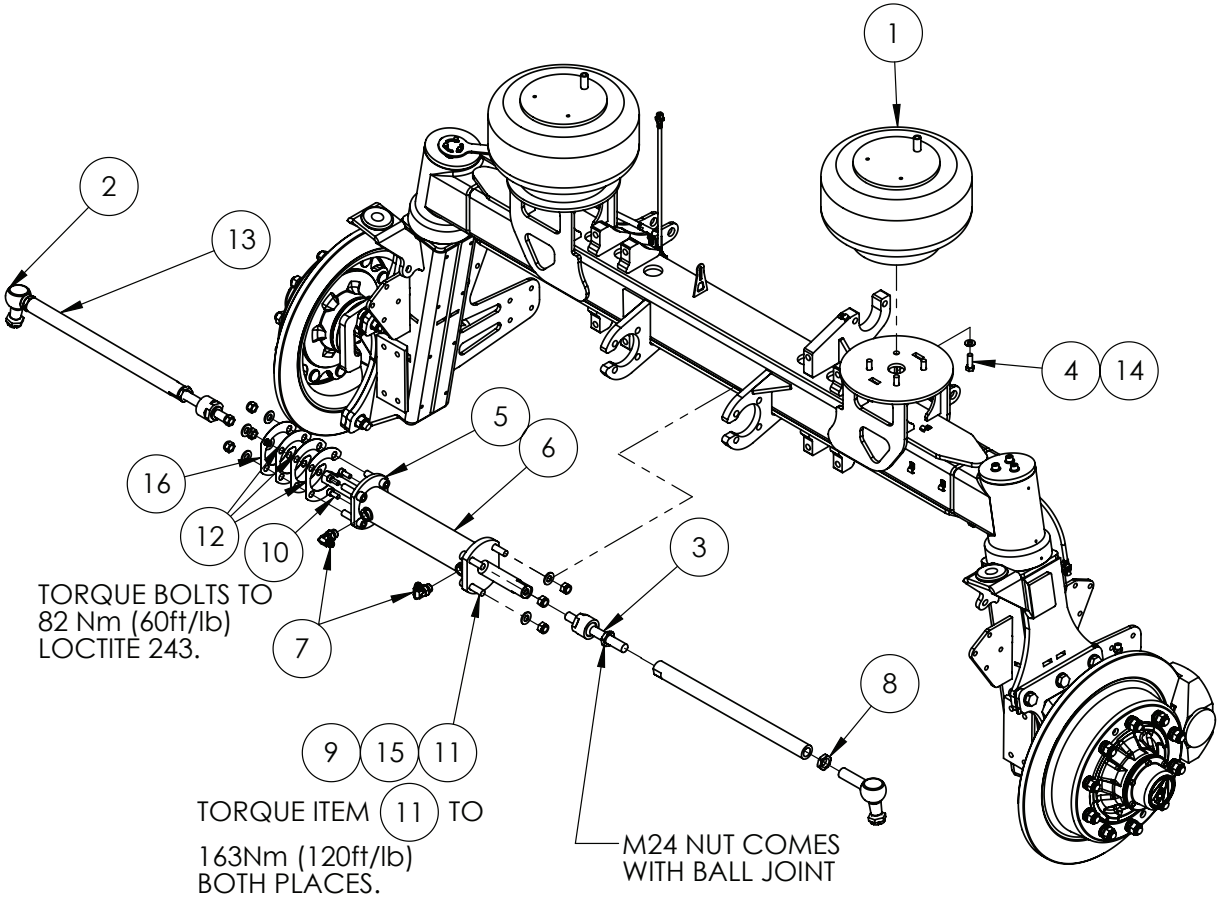

IF DESCRIPTION PREFIX IS ASSEMBLY DRAWING ONLY OR PRODUCTION DRAWING ONLY THE ITEM IS NOT FOR SALE			
ITEM	PART NUMBER	DESCRIPTION	QTY
1	GA5005311	AIR SPRING HT230 SINGLE AIR STUD	2
2	GA5065041	BALL JOINT, RIGHT ANGLE, M28X1.5	2
3	GA5065045	BALL JOINT, INLINE, M24 X 1.5 PITCH X M22 X 1.5 PITCH	2
4	GA5006167	BOLT 1/2 UNC X 1 1/2 GR8 ZP	8
5	GA4514635	FLANGE PLATE FOR STEERING RAM	1
6	GA5066586	HYDRAULIC CYLINDER, BORE 3", ROD 1.5", STROKE 7.5", STEERING	1
7	GA3500761	HYDRAULIC ADAPTOR, ELBOW, 7/8" UNO TO 3/4" JIC, 90 DEG, S91-1214	2
8	GA4572170	LOCK NUT, M28 X 1.5, SUIT TIE ROD END	2
9	GA5001029	NUT M16 NYLOC ZP	8
10	GA5070250	SHCS 7/16 UNF X 1 GR12.9 ZP	4
11	GA5048680	SHCS M16 X 60 GR12.9 ZP	8
12	GA4514640	STEERING RAM SHIM PLATE	3
13	GA4552385	TIE ROD, 3m 2WD, G3 G4	2
14	GA5017673	WASHER 1/2" HIGH TENSILE	8
15	GA5001043	WASHER 16mm FLAT SS HD	8
16	GA4000490	STEERING RAM SHIM PLATE 0.5mm	1
GA4951930-04 GOLDACRES	ASSEMBLY DRAWING ONLY. FRONT AXLE, 2X4 ASSY, 3000mm WIDE, G4 S2 MY24		REV 00.D

Front Axle, 2WD, 3mt, Fixed, Torque Rod & Shock Absorber Mounting

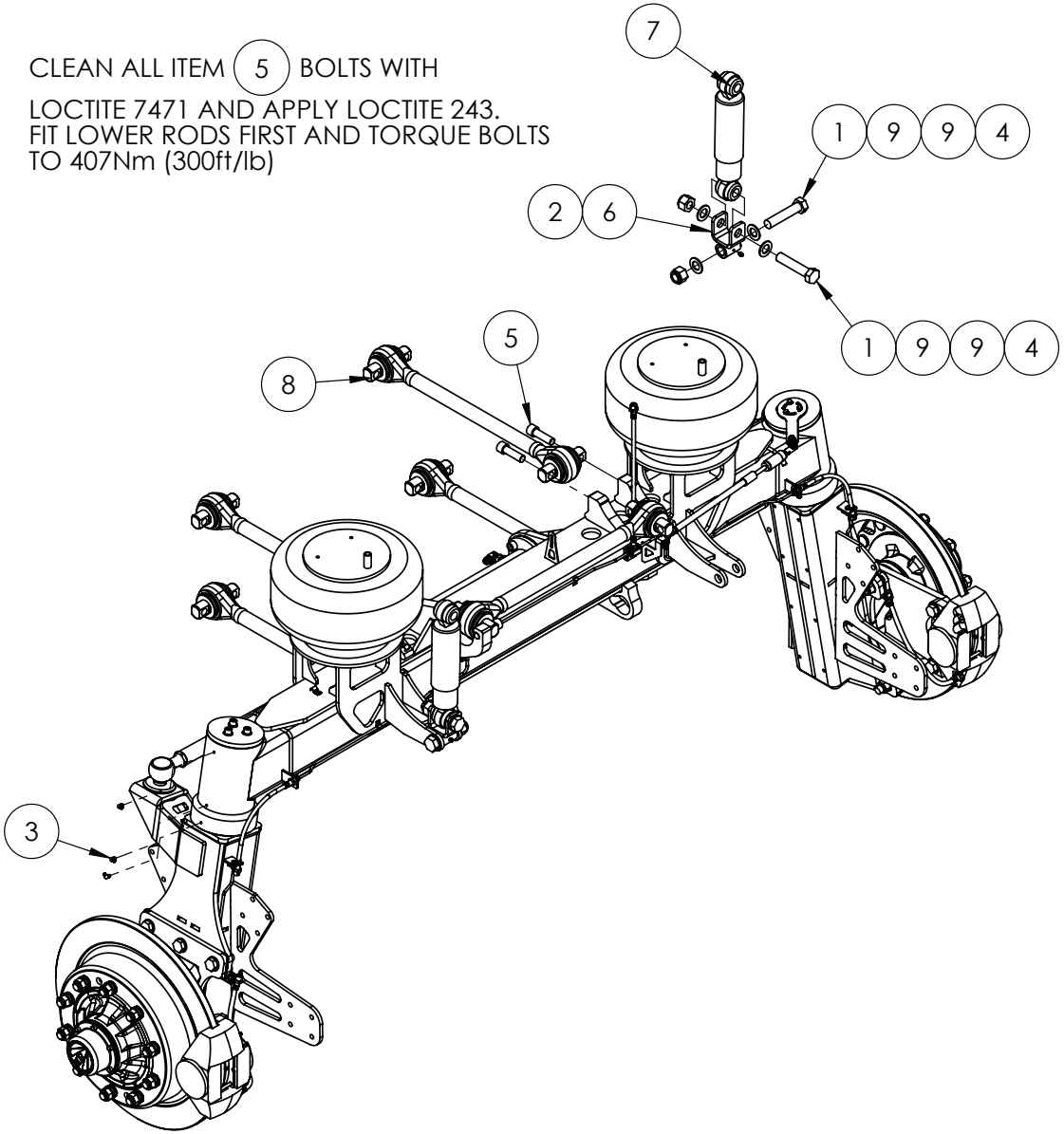

IF DESCRIPTION PREFIX IS ASSEMBLY DRAWING ONLY OR PRODUCTION DRAWING ONLY THE ITEM IS NOT FOR SALE			
ITEM	PART NUMBER	DESCRIPTION	QTY
1	GA5011346	BOLT M24 X 115 GR8.8 ZP SPECIAL 75 TO 77mm SHANK	4
2	GA5050450	GREASE NIPPLE, 6mm	2
3	GA5009637	GREASE NIPPLE, ELBOW, 90 DEGREE, 1/4" UNF MALE	6
4	GA5012469	NUT M24 NYLOC ZP	4
5	GA5053145	SHCS 3/4 UNF X 2 1/2 GR12.9 ZP BLUE	10
6	GA4660670	SHOCK ABSORBER MOUNT, FRONT AXLE, SELF PROPELLED 2015	2
7	GA2500000	SHOCK ABSORBER, SUSPENSION DAMPER, BLACK, MONROE	2
8	GA5068850	SUSPENSION LINK, TORQUE ROD, 650mm CENTRE, HOLLOW, ATRO	5
9	GA5001891	WASHER 24mm FLAT HD SS	8
GA4951930-05 GOLDACRES		ASSEMBLY DRAWING ONLY. FRONT AXLE, 2X4 ASSY, 3000mm WIDE, G4 S2 MY24	REV 00.C

Front Axle, 2WD, Drop Leg, Hub Mounting Assembly, LH Side

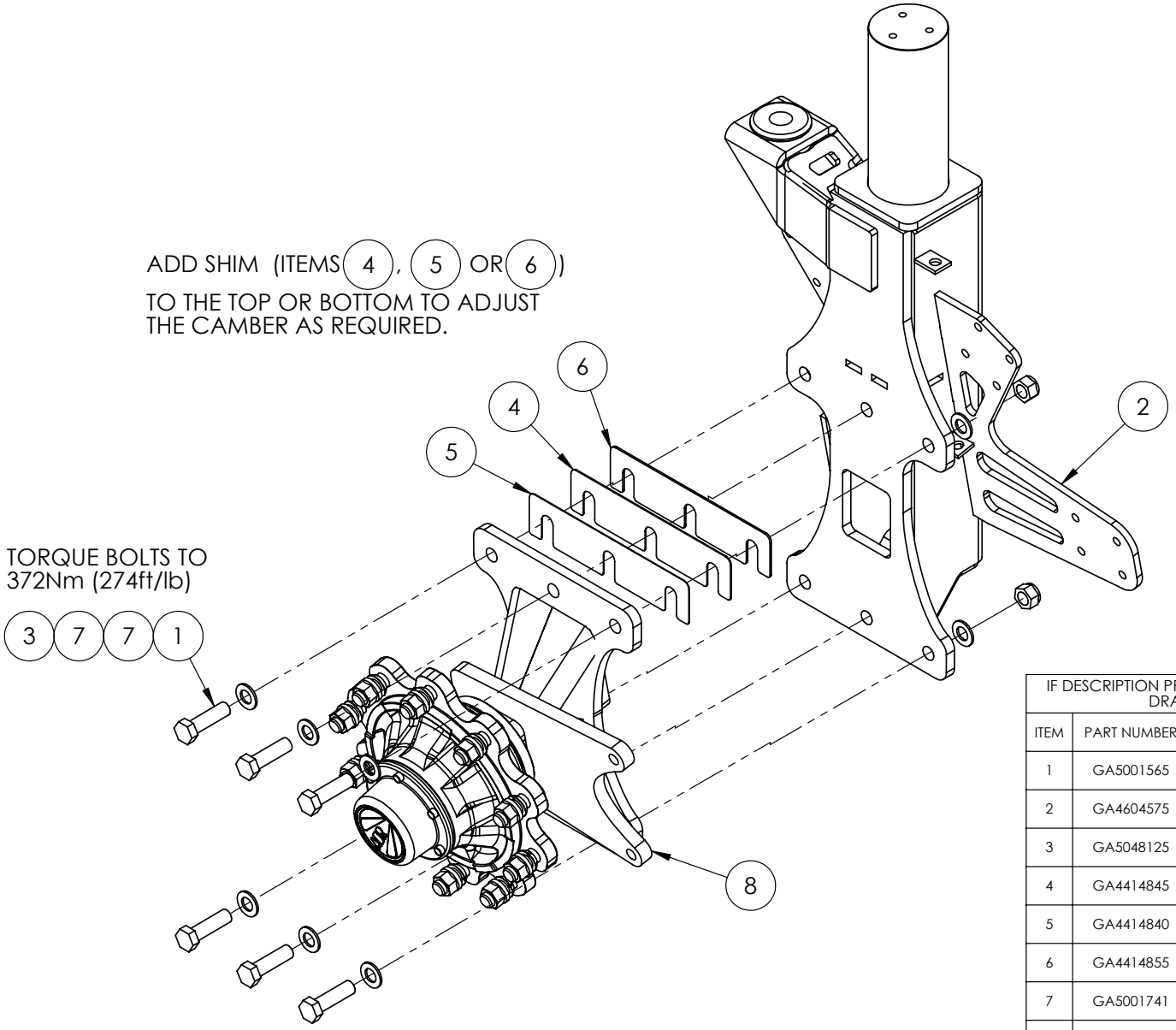

IF DESCRIPTION PREFIX IS ASSEMBLY DRAWING ONLY OR PRODUCTION DRAWING ONLY THE ITEM IS NOT FOR SALE			
ITEM	PART NUMBER	DESCRIPTION	QTY
1	GA5001565	BOLT M20 X 70 GR8.8 ZP	6
2	GA4604575	DROP LEG, LHS, CAMBER ADJUSTIBLE, FRONT 2WD, DROP LEG, G4 S2	1
3	GA5048125	NUT M20 NYLOC COARSE ZP	4
4	GA4414845	PLATE, SHIM, 1.6mm CAMBER ADJUSTIBLE, G4 S2	1
5	GA4414840	PLATE, SHIM, 1mm CAMBER ADJUSTIBLE, G4 S2	1
6	GA4414855	PLATE, SHIM, 3mm CAMBER ADJUSTIBLE, G4 S2	1
7	GA5001741	WASHER 20mm FLAT SS HD	10
8	GA4604570	WHEEL END, CAMBER ADJUSTIBLE, FRONT 2WD DROP LEG, LHS, G4 S2	1
GA4952670 GOLDACRES		PRODUCTION DRAWING ONLY. DROP LEG, LHS, CAMBER ADJUSTIBLE, FRONT 2WD, G4 S2 MY24	REV 00

Front Axle, 2WD, Drop Leg, Hub Mounting Assembly, RH Side

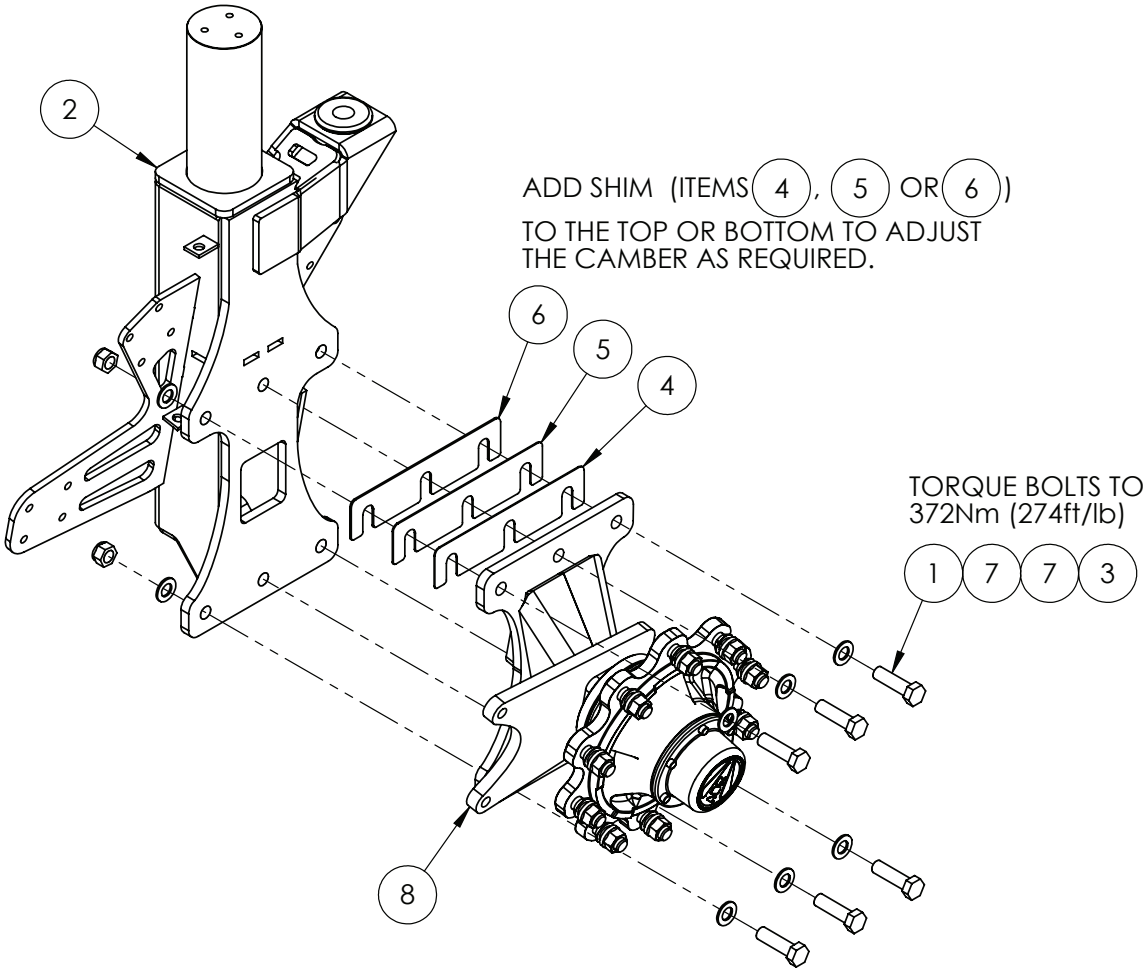

IF DESCRIPTION PREFIX IS ASSEMBLY DRAWING ONLY OR PRODUCTION DRAWING ONLY THE ITEM IS NOT FOR SALE			
ITEM	PART NUMBER	DESCRIPTION	QTY
1	GA5001565	BOLT M20 X 70 GR8.8 ZP	6
2	GA4604580	DROP LEG, LHS, CAMBER ADJUSTIBLE, FRONT 2WD, DROP LEG, G4 S2	1
3	GA5048125	NUT M20 NYLOC COARSE ZP	4
4	GA4414845	PLATE, SHIM, 1.6mm CAMBER ADJUSTIBLE, G4 S2	1
5	GA4414850	PLATE, SHIM, 2mm CAMBER ADJUSTIBLE, G4 S2	1
6	GA4414855	PLATE, SHIM, 3mm CAMBER ADJUSTIBLE, G4 S2	1
7	GA5001741	WASHER 20mm FLAT SS HD	10
8	GA4604595	WHEEL END, CAMBER ADJUSTIBLE, FRONT 2WD DROP LEG, RHS, G4 S2	1
GA4952675 GOLDACRES		PRODUCTION DRAWING ONLY. DROP LEG, RHS, CAMBER ADJUSTIBLE, FRONT 2WD, G4 S2 MY24	REV 00

Front Axle, 2WD, 2-3mt Adjustable

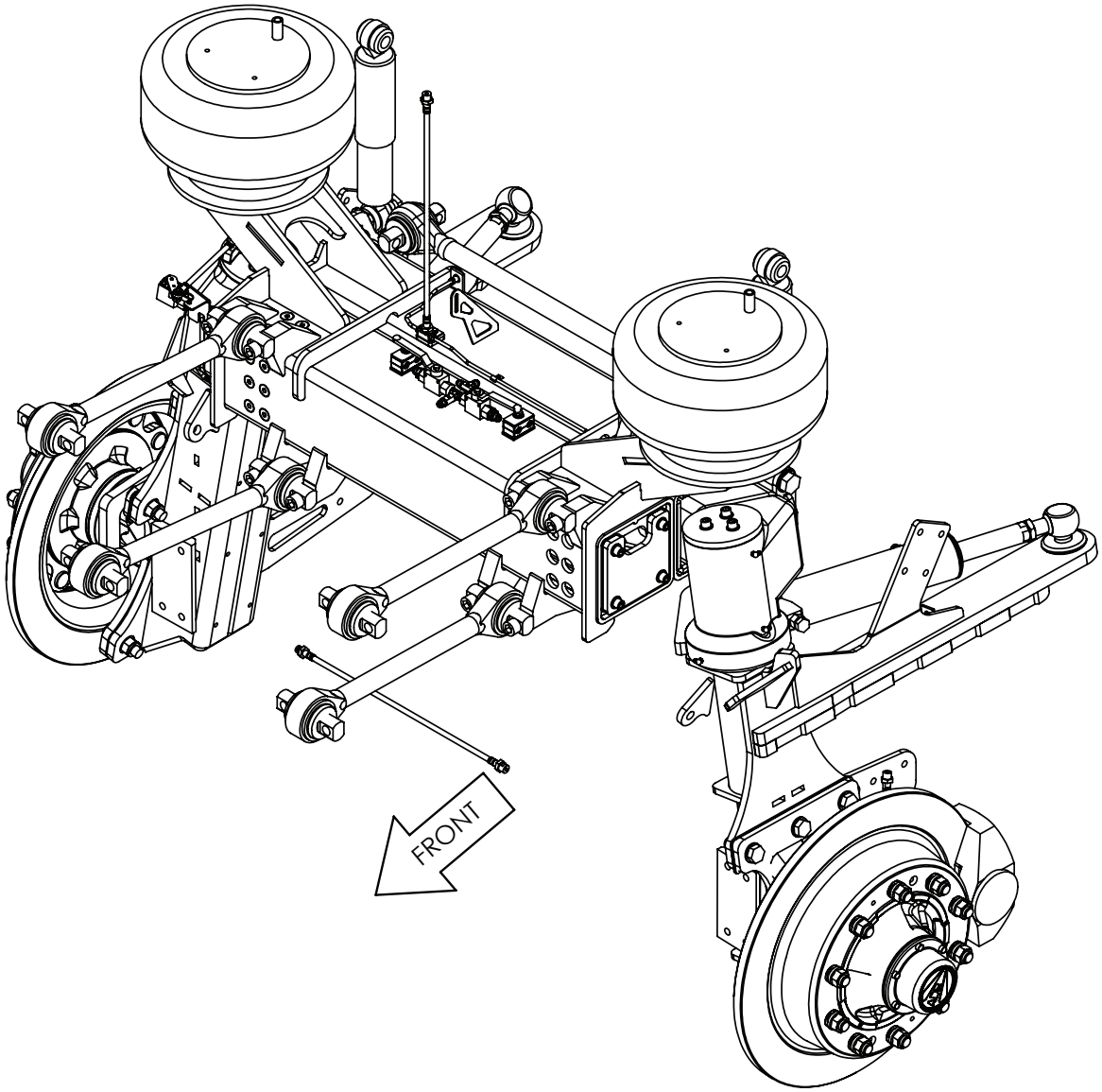

BUILD OPTIONS:
40077- HYDRAULIC ADJUSTABLE WHEEL TRACK 2000MM - 3000MM, 2WD

GA4952255 GOLDACRES	AXLE ASSEMBLY, 2X4, 2-3M FRONT, G4 S2 MY24	REV 00

Front Axle, 2WD, 2-3mt Adjustable, Airbag & Steering Cylinder

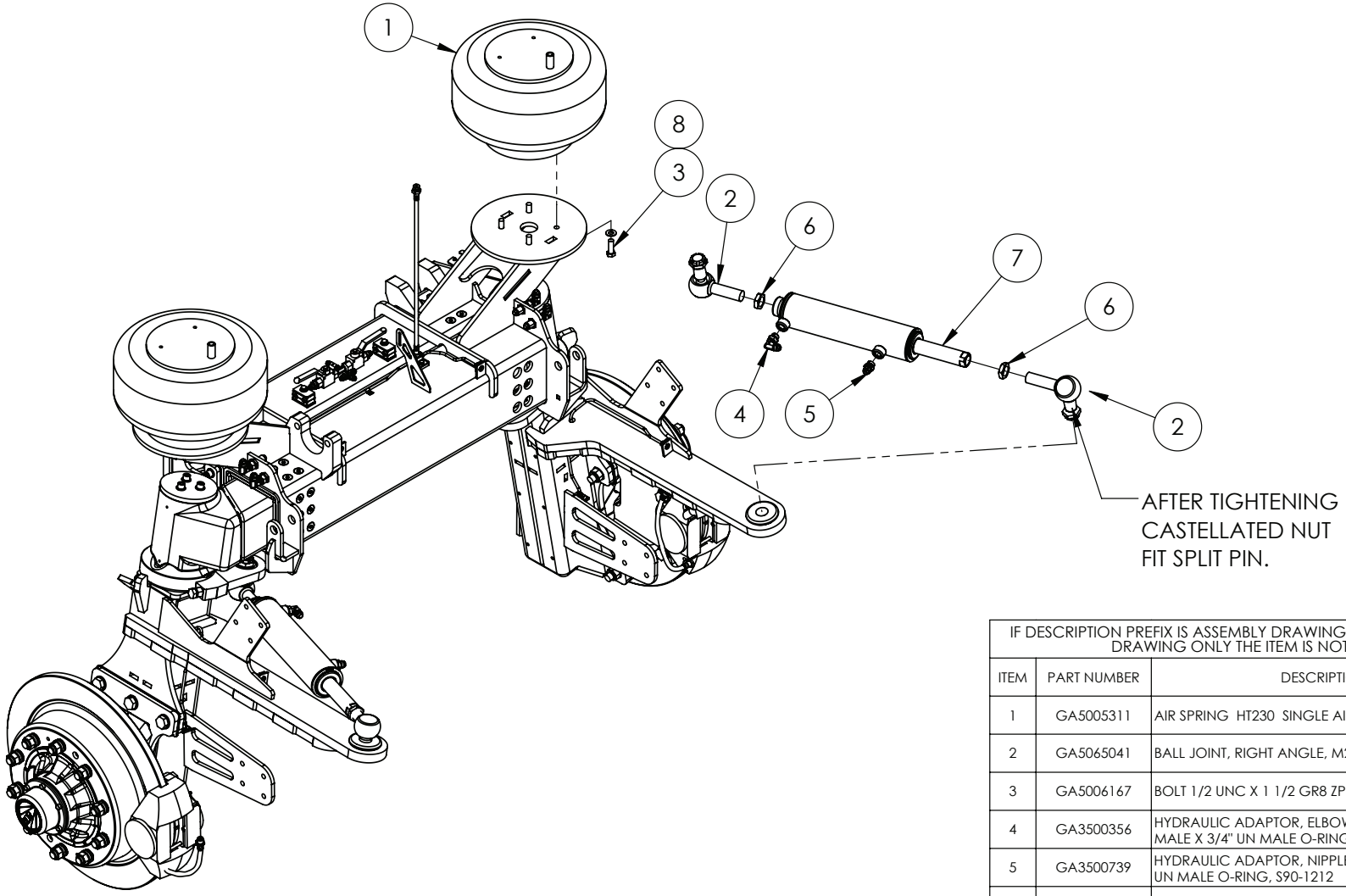

IF DESCRIPTION PREFIX IS ASSEMBLY DRAWING ONLY OR PRODUCTION DRAWING ONLY THE ITEM IS NOT FOR SALE			
ITEM	PART NUMBER	DESCRIPTION	QTY
1	GA5005311	AIR SPRING HT230 SINGLE AIR STUD	2
2	GA5065041	BALL JOINT, RIGHT ANGLE, M28X1.5	4
3	GA5006167	BOLT 1/2 UNC X 1 1/2 GR8 ZP	8
4	GA3500356	HYDRAULIC ADAPTOR, ELBOW, 90 DEGREE, 3/4" JIC MALE X 3/4" UN MALE O-RING, S91-1212	2
5	GA3500739	HYDRAULIC ADAPTOR, NIPPLE, 3/4" JIC MALE X 3/4" UN MALE O-RING, S90-1212	2
6	GA4572170	LOCK NUT, M28 X 1.5, SUIT TIE ROD END	4
7	GA3501631	RAM HYD PHASING 3.0"X 250mm STROKE FEMALE THREADED ENDS	2
8	GA5017673	WASHER 1/2" HIGH TENSILE	8
GA4952255-09 GOLDACRES		ASSEMBLY DRAWING ONLY. AXLE ASSEMBLY, 2X4, 2-3M FRONT, G4 S2 MY24	REV 00.C

Front Axle, 2WD, 2-3mt Adjustable, Brake & Brake Line Assembly

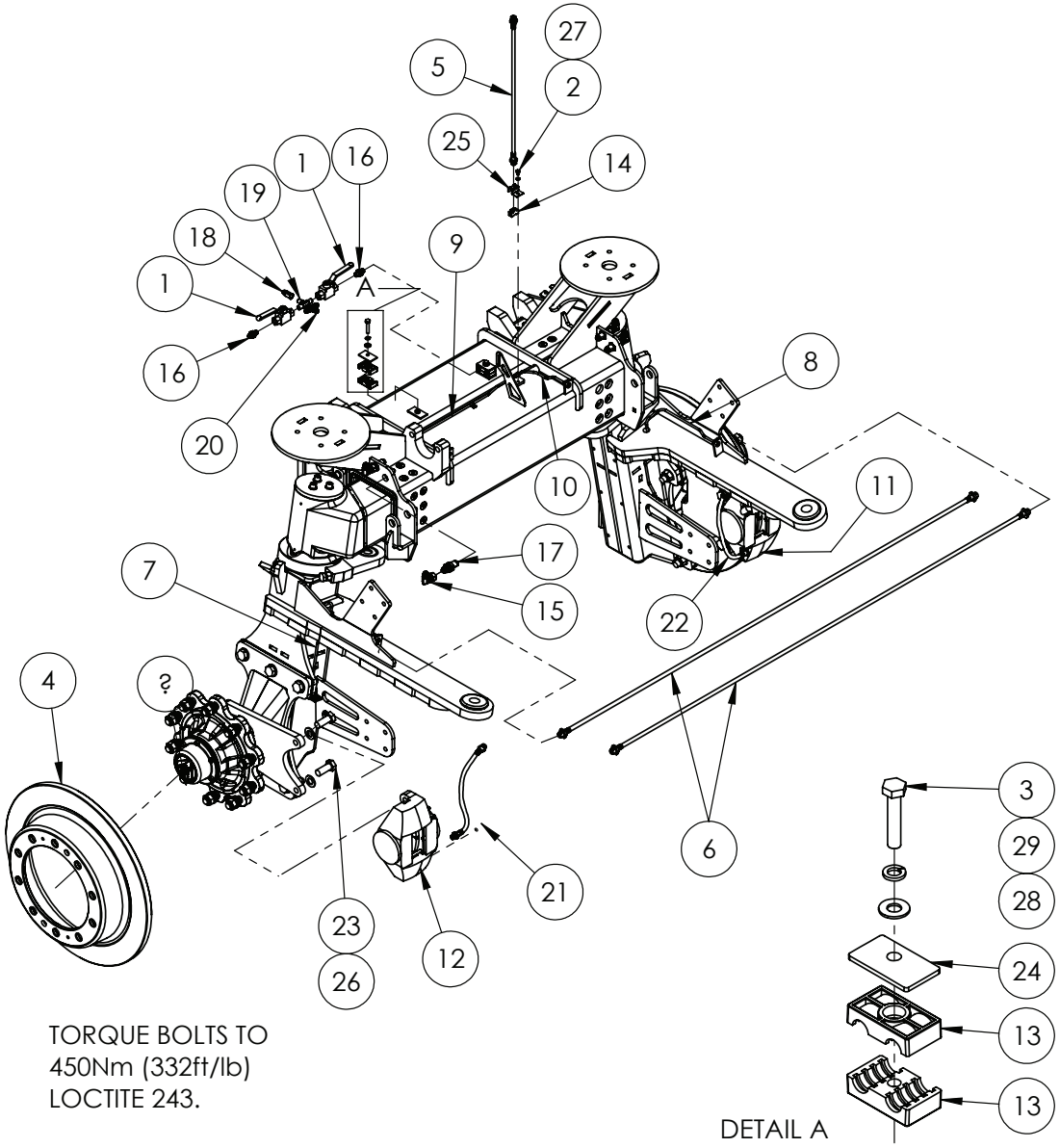

TORQUE BOLTS TO
450Nm (332ft/lb)
LOCTITE 243.

IF DESCRIPTION PREFIX IS ASSEMBLY DRAWING ONLY OR PRODUCTION DRAWING ONLY THE ITEM IS NOT FOR SALE

ITEM	PART NUMBER	DESCRIPTION	QTY
1	GA5078083	BALL VALVE 1/4" BSPP	2
2	GA5004029	BOLT M6 X 10 GR8.8 ZP	1
3	GA5048655	BOLT M8 X 40 GR8.8 ZP	2
4	GA5070065	BRAKE DISC ROTOR, SUIT DROP LEGS, CROP CRUISER, G4, G6	2
5	GA5025944	BRAIDED BRAKE HOSE, CHASSIS TO AXLE, ADJUSTIBLE AXLE, 550mm LONG, DOT 4	1
6	GA5025943	BRAIDED BRAKE HOSE, 1800mm LONG, 7/16" 24TPI FITTINGS, DOT 4	2
7	GA4954020	BRAKE LINE, ADJUSTIBLE AXLE, FRONT DROP LEG, LHS, G4 S2	1
8	GA4954015	BRAKE LINE, ADJUSTIBLE AXLE, FRONT DROP LEG, RHS, G4 S2	1
9	GA4954030	BRAKE LINE, ADJUSTIBLE AXLE, FRONT, CENTRE, LHS, G4 S2	1
10	GA4954025	BRAKE LINE, ADJUSTIBLE AXLE, FRONT, CENTRE, RHS, G4 S2	1
11	GA5016069	BRAKE CALIPER, 2 X 75mm, SUIT BRAKE FLUID, STILFRENI	1
12	GA5016069	BRAKE CALIPER, 2 X 75mm, SUIT BRAKE FLUID, STILFRENI	1
13	GA5078031	DOUBLE CLAMP JAWS PP GR 2 14mm	4
14	GA5008793	FLARE TEE	1
15	GA3500822	HYDRAULIC ADAPTOR ELBOW, 3/4" JIC MALE X 3/4" JIC FEMALE SWIVEL, S15-1212	4
16	GA3500544	HYDRAULIC ADAPTOR NIPPLE, 1/4" BSP O-RING X 9/16" JIC, S74-0409	2
17	GA3500803	HYDRAULIC ADAPTOR, BULKHEAD NIPPLE, 3/4" JIC MALE X 3/4" JIC MALE, S10-1212	4
18	GA3501287	HYDRAULIC ADAPTOR, STRAIGHT, 1/4" BSPTF X 9/16" JICM S16-0409	1
19	GA3500269	HYDRAULIC ADAPTOR, TEE, 1/4" BSPT MALE X 1/4" BSPT MALE X 1/4" BSPT MALE, S50-040404	1
20	GA3500719	HYDRAULIC ADAPTOR, TEE, 9/16" JIC MALE X 9/16" JIC MALE X 9/16" JIC MALE, S19-090909	1
21	GA5025919	BRAKE HOSE, DROP LEG TO CALIPER, 470mm, DOT 4	1
22	GA5025919	BRAKE HOSE, DROP LEG TO CALIPER, 470mm, DOT 4	1
23	GA5001515	M20X1.5PX50 HT BOLT	4
24	GA5078042	MOUNTING CLAMP, DOUBLE TYPE, PLATE, TOP, GROUP 2, RCD-2PT	2
25	GA4415490	PLATE, BRACKET, T PIECE MOUNTING, BRAKE LINES	1
26	GA5001741	WASHER 20mm FLAT SS HD	4
27	GA5004437	WASHER 6mm FLAT SS	1
28	GA5003643	WASHER 8mm FLAT SS HD	2
29	GA5004919	WASHER 8mm SPRING SS	2
30	GA5025917	BRAKE CLIP, BRAIDED BRAKE LINE, DOT 4	6
GA4952255-08 GOLDACRES		ASSEMBLY DRAWING ONLY. AXLE ASSEMBLY, 2X4, 2-3M FRONT, G4 S2 MY24	REV 00.G

Front Axle, 2WD, 2-3mt Adjustable, Angle Sensor, Shocker & Torque Rods

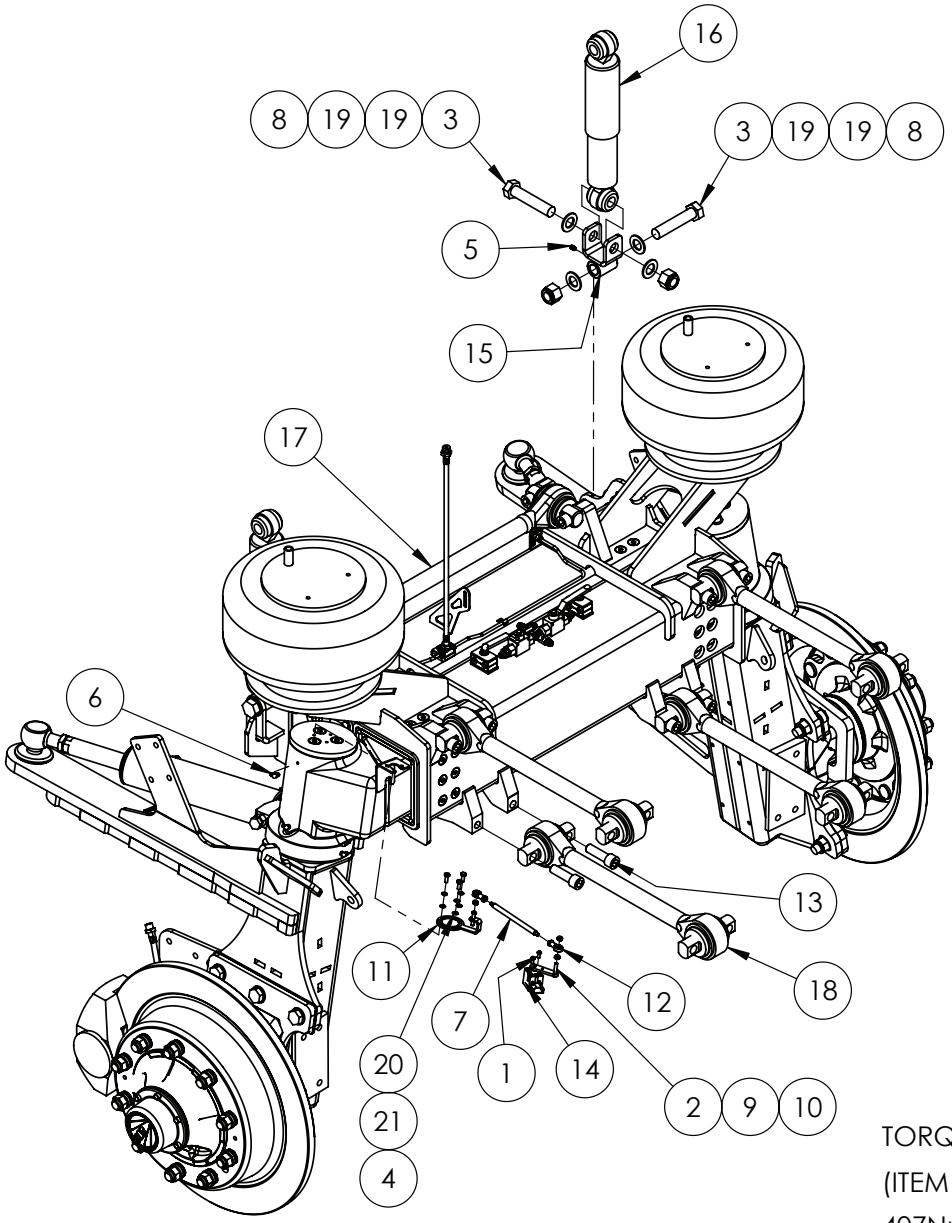

TORQUE ALL BOLTS (ITEM 13) TO 407Nm (300ft/lb)

IF DESCRIPTION PREFIX IS ASSEMBLY DRAWING ONLY OR PRODUCTION DRAWING ONLY THE ITEM IS NOT FOR SALE			
ITEM	PART NUMBER	DESCRIPTION	QTY
1	GA0500092	BHCS M5 X 12 GR12.9 ZP	2
2	GA5004075	BHCS M6 X 30 SS A2-70	2
3	GA5011346	BOLT M24 X 115 GR8.8 ZP SPECIAL 75 TO 77mm SHANK	4
4	GA5004041	BOLT M6 X 16 GR8.8 ZP	3
5	GA5050450	GREASE NIPPLE, 6mm	2
6	GA5009637	GREASE NIPPLE, ELBOW, 90 DEGREE, 1/4" UNF MALE	6
7	GA4583650	LINK ROD, STEER ANGLE SENSOR, ADJUSTABLE AXLE, 2-3m, G4 S2	1
8	GA5012469	NUT M24 NYLOC ZP	4
9	GA5049030	NUT M6 HEX SS	2
10	GA5004429	NUT M6 NYLOC SS	2
11	GA4415315	PLATE, STEER ANGLE SENSOR MOUNT, KING PIN, ADJUSTIBLE AXLES, FRONT, G4 S2	1
12	GA5052725	ROD END 6mm FEMALE	2
13	GA5053145	SHCS 3/4 UNF X 2 1/2 GR12.9 ZP BLUE	10
14	GA5047668	SENSOR, ANGLE OF ROTATION, WAS, 90DEG, 5V, SMART STEER AXLE, WS1T90/10, BOSCH	1
15	GA4660670	SHOCK ABSORBER MOUNT, FRONT AXLE, SELF PROPELLED 2015	2
16	GA2500000	SHOCK ABSORBER, DOUBLE EYE, 24mm EYE, 80mm OD, RED	2
17	GA5068850	SUSPENSION LINK, TORQUE ROD, 650mm CENTRE, HOLLOW, ATRO	1
18	GA5068852	TORQUE ROD, SUSPENSION LINK ADJUSTABLE AXLE 500mm CENTRES, SOLID, ATRO	4
19	GA5001891	WASHER 24mm FLAT HD SS	8
20	GA5004437	WASHER 6mm FLAT SS	3
21	GA5004447	WASHER 6mm SPRING SS	3
GA4952255-10 GOLDACRES		ASSEMBLY DRAWING ONLY. AXLE ASSEMBLY, 2X4, 2-3M FRONT, G4 S2 MY24	REV 00.D

Front Axle, 2WD, 2-3mt Adjustable, King Pin Assembly

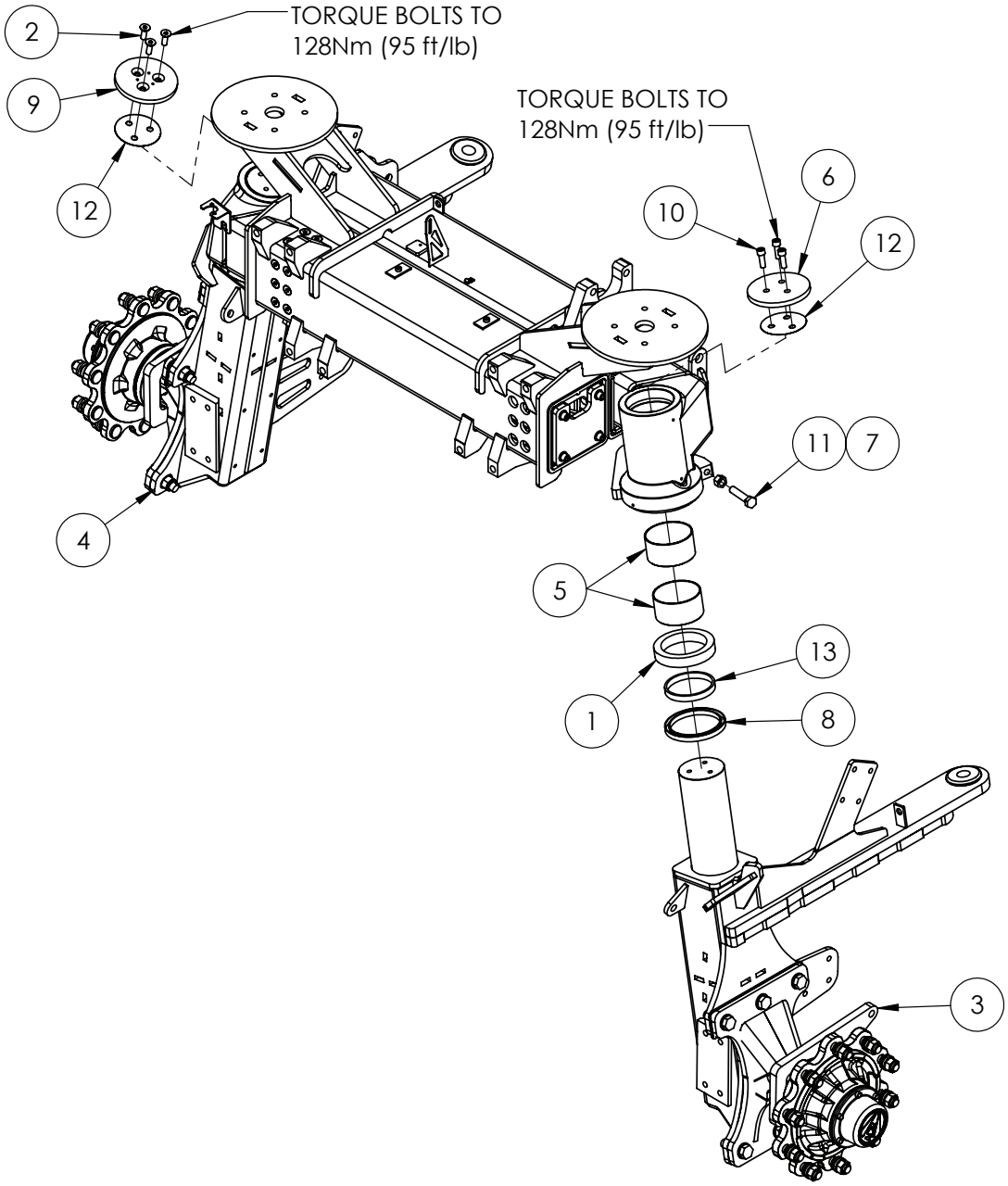

IF DESCRIPTION PREFIX IS ASSEMBLY DRAWING ONLY OR PRODUCTION DRAWING ONLY THE ITEM IS NOT FOR SALE			
ITEM	PART NUMBER	DESCRIPTION	QTY
1	GA5048245	BEARING BALL THRUST 51122	2
2	GA5069080	CSCS M12 X 35 GR12.9 ZP	3
3	GA4952680	DROP LEG, FRONT, LHS, 2WD, CAMBER ADJUSTIBLE, 2-3M AXLE, G4 S2 MY24	1
4	GA4952685	DROP LEG, FRONT, RHS, 2WD, CAMBER ADJUSTIBLE, 2-3M AXLE, G4 S2 MY24	1
5	GA5009453	GLACIER BUSH 110 ID X 60 LONG	4
6	2M-FA011LAS	KING PIN RETAINING CAP, BOLT ON	1
7	GA5012385	NUT M16 ZP	2
8	GA5048635	OIL SEAL 145 X 120 X 12	2
9	GA4415325	PLATE, KING PIN RETAINING CAP, BOLT ON, STEER ANGLE, ADJUSTIBLE AXLES, FRONT, G4 S2	1
10	GA5000313	SHCS M12 X 35 GR12.9 ZP	3
11	GA5011307	SET SCREW M16 X 80 GR8.8 ZP	2
12	F70544A	SHIM PLATE FOR 2WD FRONT AXLES	2
13	2MFA004-IGR	SPACER RING/THRUST BEARING MOUNT FOR 2WD FRONT AXLES	2
GA4952255-07 GOLDACRES		ASSEMBLY DRAWING ONLY. AXLE ASSEMBLY, 2X4, 2-3M FRONT, G4 S2 MY24	REV 00

Front Axle, 2WD, 2-3mt Adjustable, Extendable Inner, Shims & Side Plates

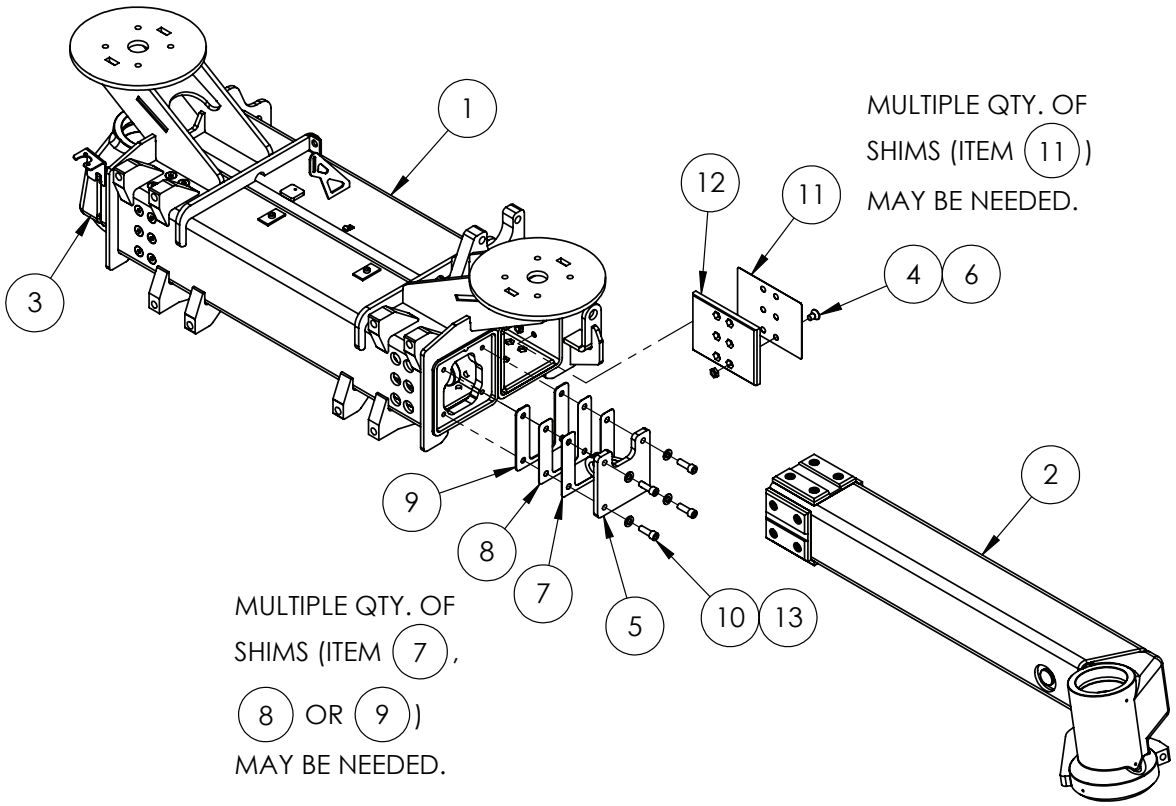

IF DESCRIPTION PREFIX IS ASSEMBLY DRAWING ONLY OR PRODUCTION DRAWING ONLY THE ITEM IS NOT FOR SALE			
ITEM	PART NUMBER	DESCRIPTION	QTY
1	GA4952255-01	ASSEMBLY DRAWING ONLY. AXLE ASSEMBLY, 2X4, 2-3M FRONT, G4 S2 MY24	1
2	GA4952255-04	ASSEMBLY DRAWING ONLY. AXLE ASSEMBLY, 2X4, 2-3M FRONT, G4 S2 MY24	1
3	GA4952255-05	ASSEMBLY DRAWING ONLY. AXLE ASSEMBLY, 2X4, 2-3M FRONT, G4 S2 MY24	1
4	GA5070860	CSCS M12 X 20 GR12.9 ZP	48
5	GA4604620	HYDRAULIC RAM MOUNT, EXTENDABLE AXLE, G4 S2	2
6	GA5071280	M12 PLAIN NUT HALF	48
7	GA4415255	PLATE, SHIM, 0.5mm, HYDRAULIC RAM END, EXTENDABLE AXLES, G4 S2	2
8	GA4415095	PLATE, SHIM, 1mm, HYDRAULIC RAM END, EXTENDABLE AXLES, G4 S2	2
9	GA4415260	PLATE, SHIM, 3mm, HYDRAULIC RAM END, EXTENDABLE AXLES, G4 S2	2
10	GA5000313	SHCS M12 X 35 GR12.9 ZP	8
11	GA4537840	SHIM OUTER ADJUSTABLE AXLE	8
12	GA4583390	SLIDER ADJUSTABLE AXLE OUTER	8
13	GA5000577	WASHER 12mm FLAT SS HD	8
GA4952255-06 GOLDACRES		ASSEMBLY DRAWING ONLY. AXLE ASSEMBLY, 2X4, 2-3M FRONT, G4 S2 MY24	REV 00

Front Axle, 2WD, 2-3mt Adjustable, Extendable Axle Inner, LH Side

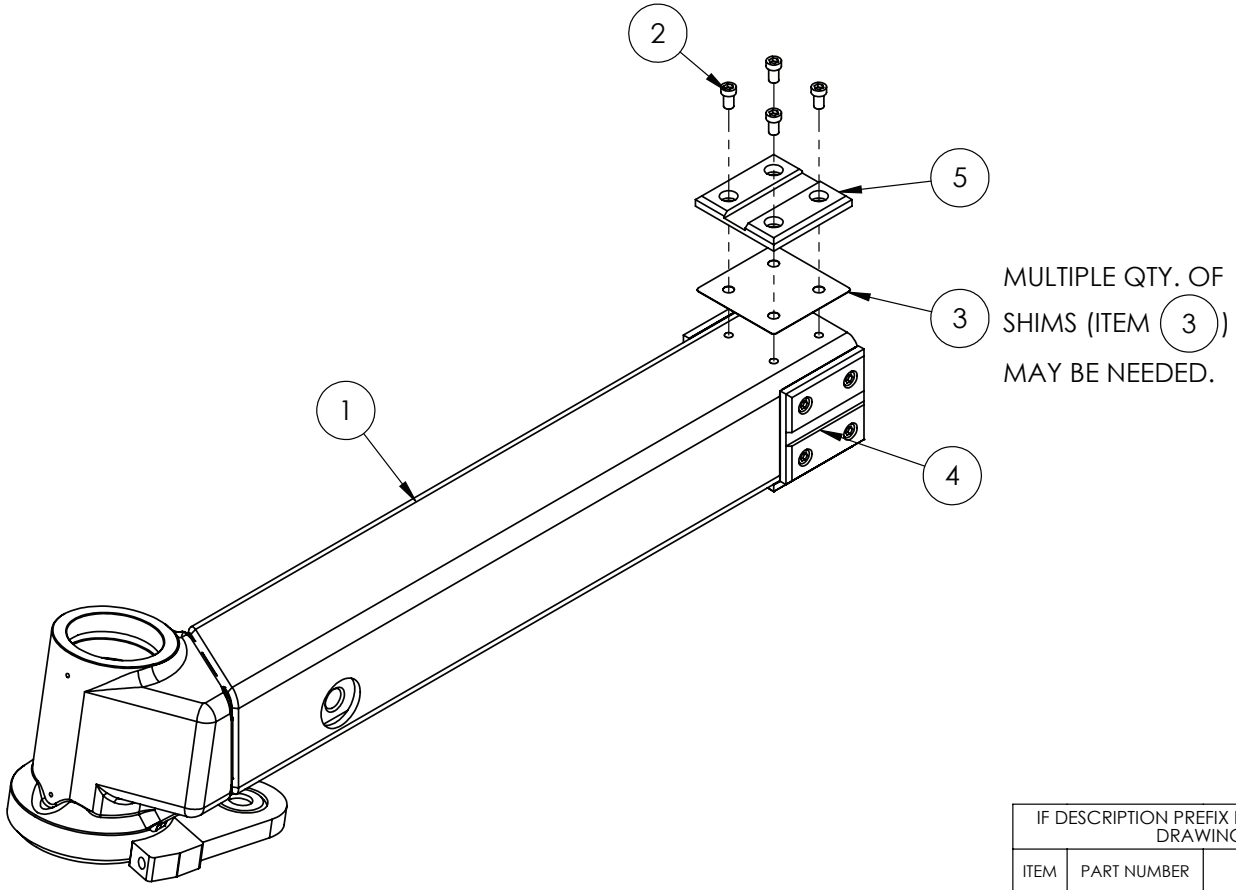

IF DESCRIPTION PREFIX IS ASSEMBLY DRAWING ONLY OR PRODUCTION DRAWING ONLY THE ITEM IS NOT FOR SALE			
ITEM	PART NUMBER	DESCRIPTION	QTY
1	GA4604630	EXTENDABLE AXLE, INNER LHS, 2-3m, FRONT, 2WD, G4 S2	1
2	GA0500015	SHCS, M12 X 20, LOW HEAD, BLACK	16
3	GA4537835	SHIM INNER ADJUSTABLE AXLE	4
4	GA4583385	WEAR PAD, ADJUSTABLE AXLE SLIDER, INNER, CAST NYLON GREEN	3
5	GA4583495	WEAR PAD, ADJUSTABLE AXLE SLIDER, INNER, CAST NYLON GREEN, 35mm SLOT	1
GA4952255-02 GOLDACRES		ASSEMBLY DRAWING ONLY. AXLE ASSEMBLY, 2X4, 2-3M FRONT, G4 S2 MY24	REV 00

Front Axle, 2WD, 2-3mt Adjustable, Extendable Axle Inner, RH Side

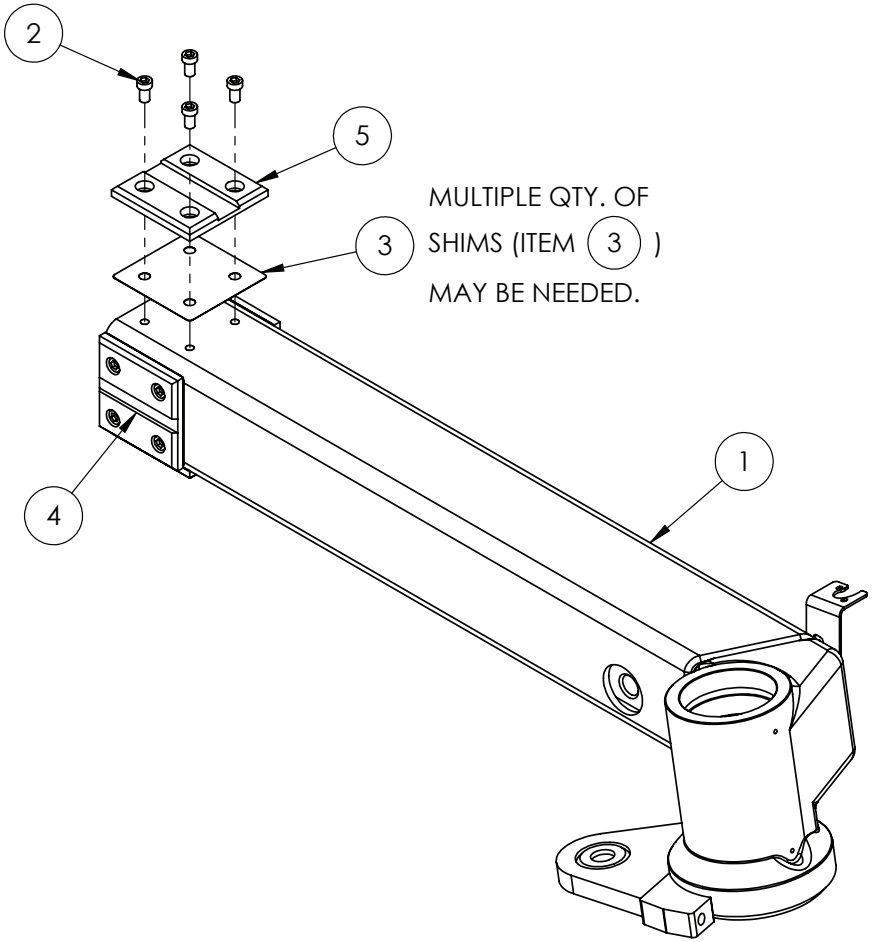

IF DESCRIPTION PREFIX IS ASSEMBLY DRAWING ONLY OR PRODUCTION DRAWING ONLY THE ITEM IS NOT FOR SALE			
ITEM	PART NUMBER	DESCRIPTION	QTY
1	GA4604625	EXTENDABLE AXLE, INNER RHS, 2-3m, FRONT, 2WD, G4 S2	1
2	GA0500015	SHCS, M12 X 20, LOW HEAD, BLACK	16
3	GA4537835	SHIM INNER ADJUSTABLE AXLE	4
4	GA4583385	WEAR PAD, ADJUSTABLE AXLE SLIDER, INNER, CAST NYLON GREEN	3
5	GA4583495	WEAR PAD, ADJUSTABLE AXLE SLIDER, INNER, CAST NYLON GREEN, 35mm SLOT	1
GA4952255-03 GOLDACRES		ASSEMBLY DRAWING ONLY. AXLE ASSEMBLY, 2X4, 2-3M FRONT, G4 S2 MY24	REV 00

Extendable Axle Inner, Hydraulic Cylinder Mounting, LH Side

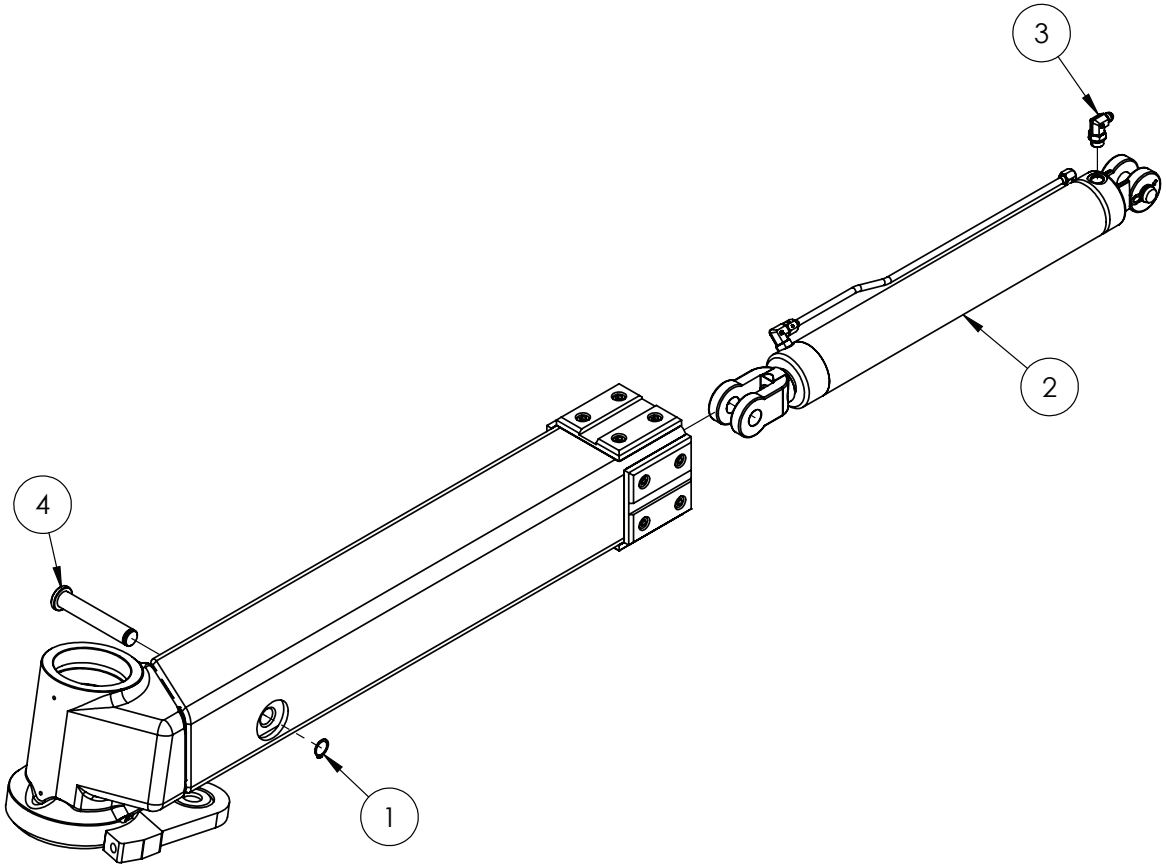

IF DESCRIPTION PREFIX IS ASSEMBLY DRAWING ONLY OR PRODUCTION DRAWING ONLY THE ITEM IS NOT FOR SALE			
ITEM	PART NUMBER	DESCRIPTION	QTY
1	GA5008519	CIRCLIP, EXTERNAL, 25mm	1
2	GA3500108	HYDRAULIC CYLINDER, 3" BORE, 500mm STROKE, ADJUSTABLE AXLE, G5 G6	1
3	GA3500700	HYDRAULIC ADAPTOR, ELBOW, 90 DEGREE, 9/16" JIC MALE X 3/4" UN MALE O-RING, S91-0912	1
4	GA4552695	PIN ADJUSTABLE AXLE EXTENSION CYLINDER	1
GA4952255-04 GOLDACRES		ASSEMBLY DRAWING ONLY. AXLE ASSEMBLY, 2X4, 2-3M FRONT, G4 S2 MY24	REV 00

Extendable Axle Inner, Hydraulic Cylinder Mounting, RH Side

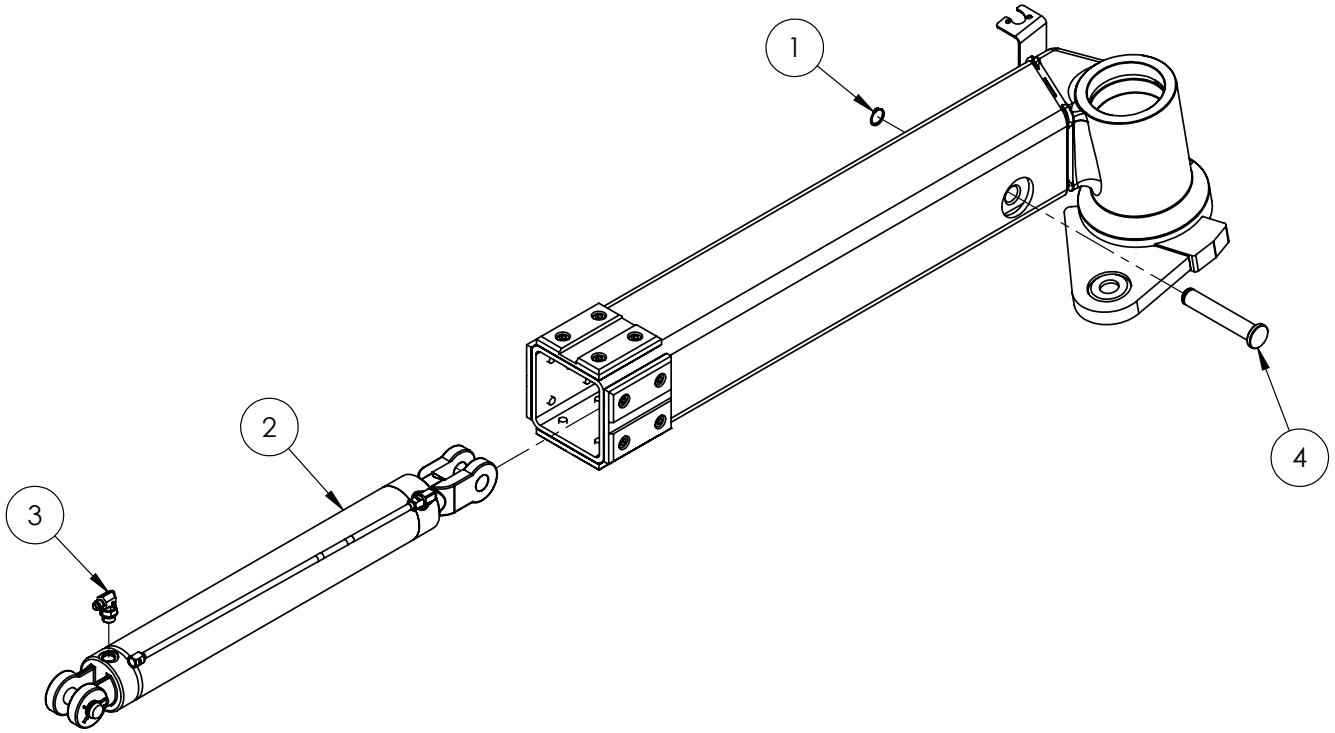

IF DESCRIPTION PREFIX IS ASSEMBLY DRAWING ONLY OR PRODUCTION DRAWING ONLY THE ITEM IS NOT FOR SALE			
ITEM	PART NUMBER	DESCRIPTION	QTY
1	GA5008519	CIRCLIP, EXTERNAL, 25mm	1
2	GA3500108	HYDRAULIC CYLINDER, 3" BORE, 500mm STROKE, ADJUSTABLE AXLE, G5 G6	1
3	GA3500700	HYDRAULIC ADAPTOR, ELBOW, 90 DEGREE, 9/16" JIC MALE X 3/4" UN MALE O-RING, S91-0912	1
4	GA4552695	PIN ADJUSTABLE AXLE EXTENSION CYLINDER	1
GA4952255-05 GOLDACRES		ASSEMBLY DRAWING ONLY. AXLE ASSEMBLY, 2X4, 2-3M FRONT, G4 S2 MY24	REV 00

Front Axle, 2WD, 2-3mt Adjustable, Drop Leg, Hub Mounting, LH

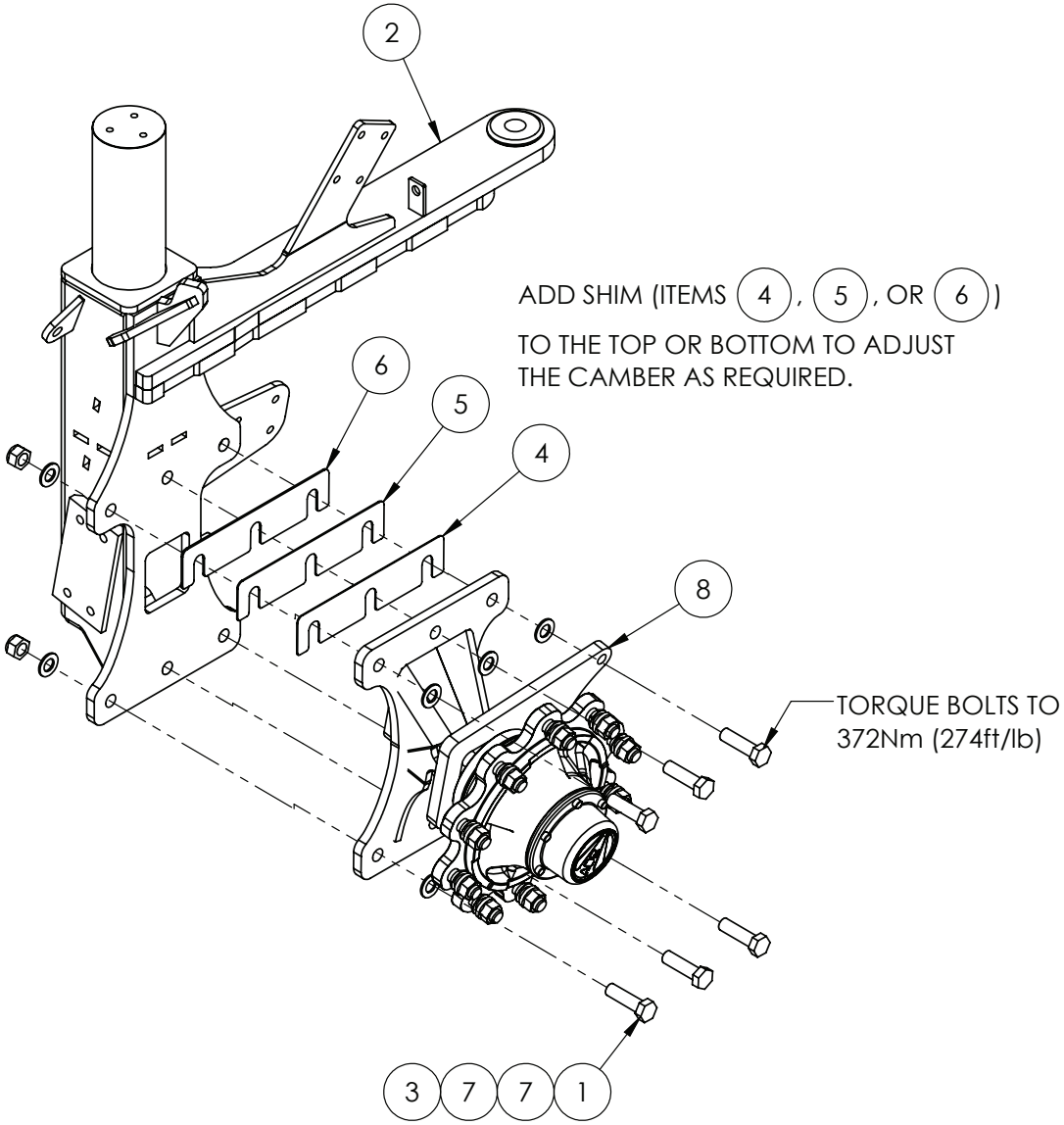

IF DESCRIPTION PREFIX IS ASSEMBLY DRAWING ONLY OR PRODUCTION DRAWING ONLY THE ITEM IS NOT FOR SALE			
ITEM	PART NUMBER	DESCRIPTION	QTY
1	GA5001565	BOLT M20 X 70 GR8.8 ZP	6
2	GA4604585	DROP LEG, LHS, CAMBER ADJUSTIBLE, FRONT 2WD, EXTENDABLE, DROP LEG, G4 S2	1
3	GA5048125	NUT M20 NYLOC COARSE ZP	4
4	GA4414845	PLATE, SHIM, 1.6mm CAMBER ADJUSTIBLE, G4 S2	1
5	GA4414850	PLATE, SHIM, 2mm CAMBER ADJUSTIBLE, G4 S2	1
6	GA4414855	PLATE, SHIM, 3mm CAMBER ADJUSTIBLE, G4 S2	1
7	GA5001741	WASHER 20mm FLAT SS HD	10
8	GA4604570	WHEEL END, CAMBER ADJUSTIBLE, FRONT 2WD DROP LEG, LHS, G4 S2	1
GA4952680 GOLDACRES		DROP LEG, FRONT, LHS, 2WD, CAMBER ADJUSTIBLE, 2-3M AXLE, G4 S2 MY24	REV 00

Front Axle, 2WD, 2-3mt Adjustable, Drop Leg, Hub Mounting, RH

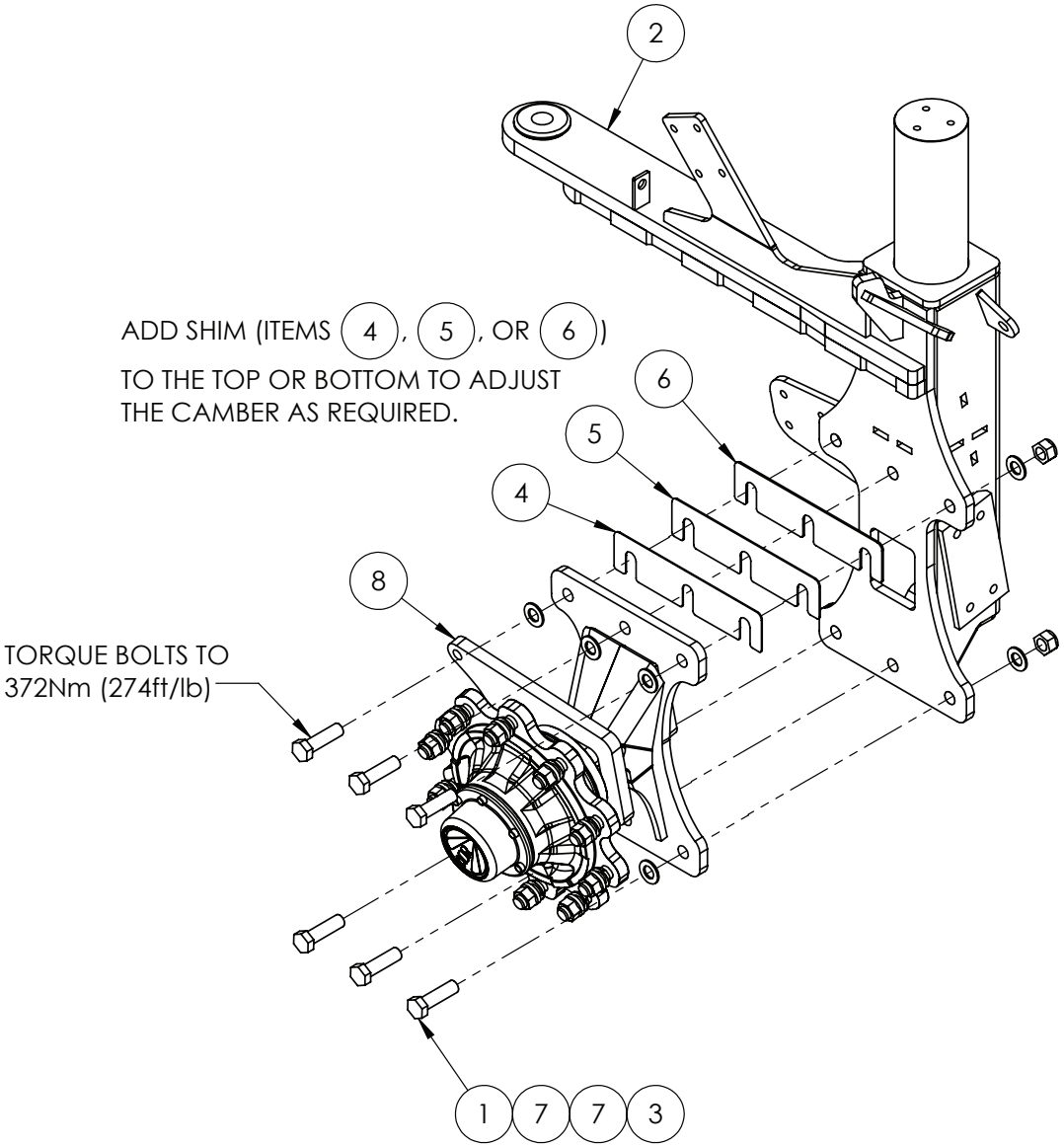

IF DESCRIPTION PREFIX IS ASSEMBLY DRAWING ONLY OR PRODUCTION DRAWING ONLY THE ITEM IS NOT FOR SALE			
ITEM	PART NUMBER	DESCRIPTION	QTY
1	GA5001565	BOLT M20 X 70 GR8.8 ZP	6
2	GA4604590	DROP LEG, RHS, CAMBER ADJUSTIBLE, FRONT 2WD, EXTENDABLE, DROP LEG, G4 S2	1
3	GA5048125	NUT M20 NYLOC COARSE ZP	4
4	GA4414845	PLATE, SHIM, 1.6mm CAMBER ADJUSTIBLE, G4 S2	1
5	GA4414850	PLATE, SHIM, 2mm CAMBER ADJUSTIBLE, G4 S2	1
6	GA4414855	PLATE, SHIM, 3mm CAMBER ADJUSTIBLE, G4 S2	1
7	GA5001741	WASHER 20mm FLAT SS HD	10
8	GA4604595	WHEEL END, CAMBER ADJUSTIBLE, FRONT 2WD DROP LEG, RHS, G4 S2	1
GA4952685 GOLDACRES		DROP LEG, FRONT, RHS, 2WD, CAMBER ADJUSTIBLE, 2-3M AXLE, G4 S2 MY24	REV 00

Front Axle, 2WD, 3-4mt Adjustable

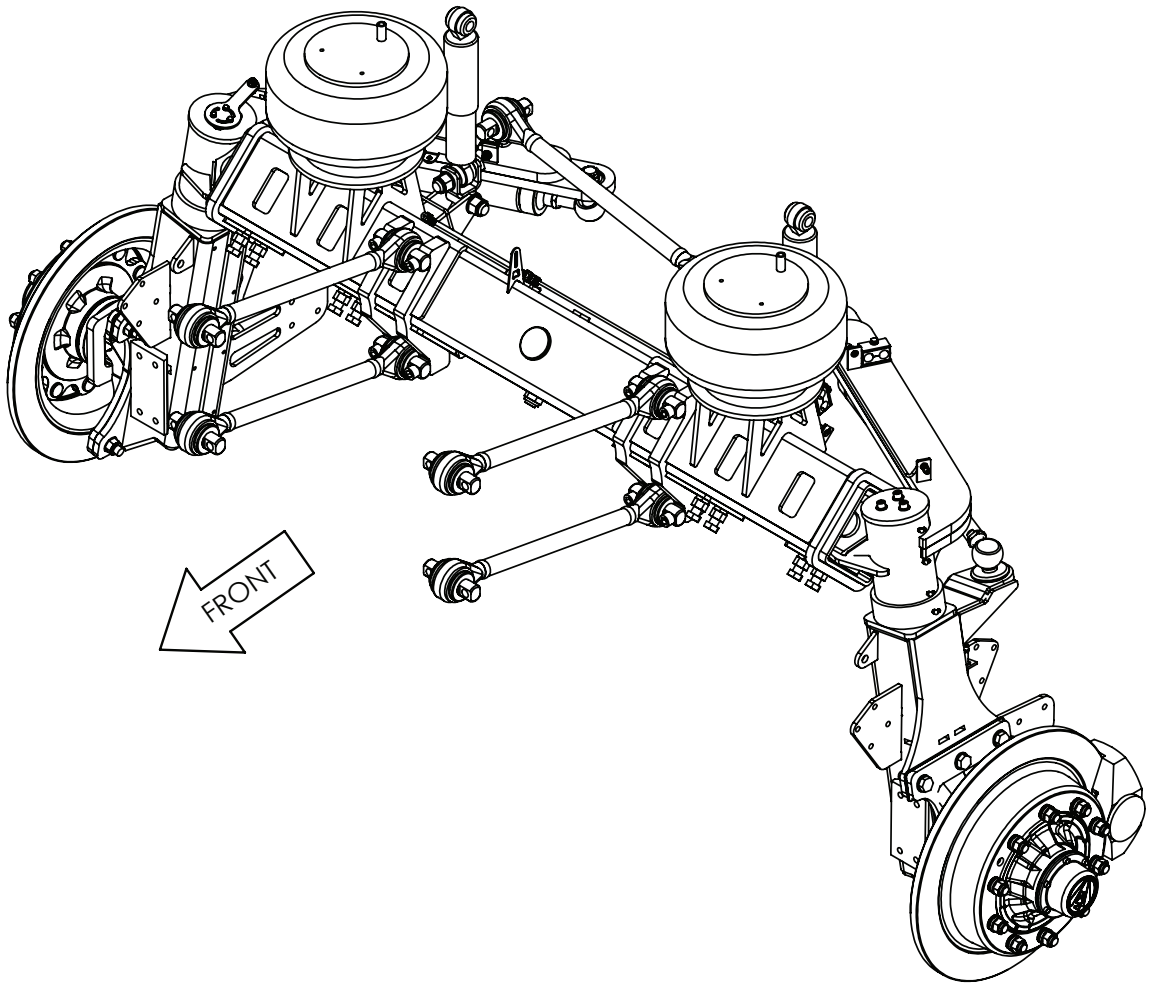

BUILD OPTIONS:
40047 - ADJUSTABLE WHEEL TRACK 3000-4000mm, MANUAL ADJUST

GA4952265 GOLDACRES	ASSEMBLY DRAWING ONLY. FRONT AXLE ASSY, 3000-4000mm WIDE, G4 S2, MY24	REV 00

Front Axle Housing Assembly, 2WD, 3-4mt Adjustable

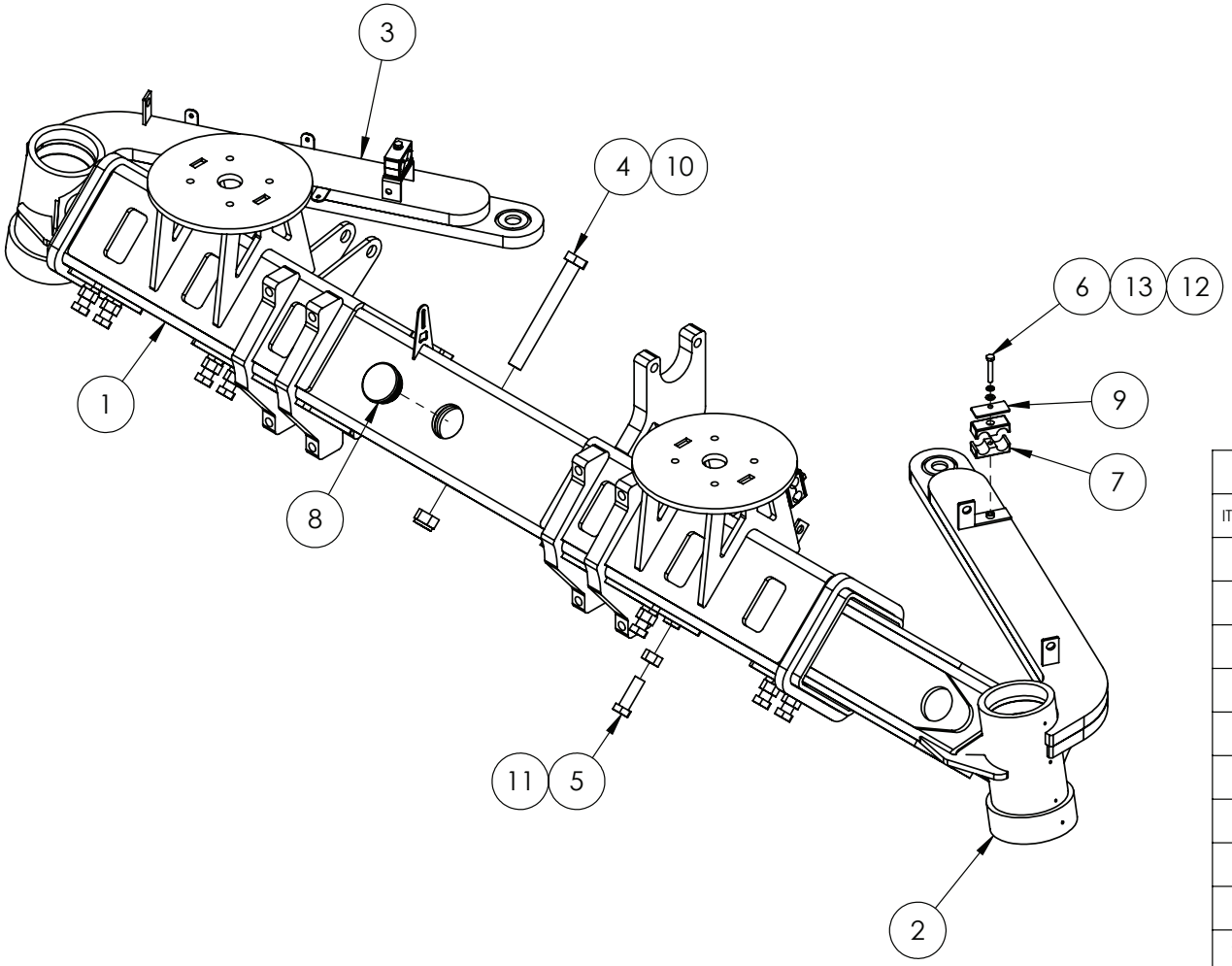

IF DESCRIPTION PREFIX IS ASSEMBLY DRAWING ONLY OR PRODUCTION DRAWING ONLY THE ITEM IS NOT FOR SALE			
ITEM	PART NUMBER	DESCRIPTION	QTY
1	GA4952265-01	ASSEMBLY DRAWING ONLY. FRONT AXLE ASSY, 3000-4000mm WIDE, G4 S2, MY24	1
2	GA4661115	AXLE HOUSING FRONT, 3-4m LH, G3 G4	1
3	GA4604735	AXLE SLIDER, FRONT, 3-4m RH, G4 S2	1
4	GA0500025	BOLT 1 UNF 12 TPI X 8 1/2 GR8 ZP	1
5	GA5011333	BOLT M20 X 60 GR8.8 ZP	16
6	GA5004727	BOLT M8 X 50 GR8.8 ZP	4
7	RCD-22J	HOSE CLAMP, RCD DOUBLE JAWS, 22mm, POLYPROPYLENE, BLACK	8
8	GA5050355	INSERT TO SUIT 65NB TUBE	1
9	GA5078046	MOUNTING CLAMP, DOUBLE TYPE, PLATE, TOP, GROUP 3	4
10	GA5012439	NUT 1" NYLOC UNC ZP	1
11	GA5001709	NUT M20 COARSE ZP	16
12	GA5003651	WASHER 8mm FLAT SS	4
13	GA5004919	WASHER 8mm SPRING SS	4
GA4952265-02 GOLDACRES		ASSEMBLY DRAWING ONLY. FRONT AXLE ASSY, 3000-4000mm WIDE, G4 S2, MY24	REV 00

Front Axle, 2WD, 3-4mt Adjustable, King Pin Assembly

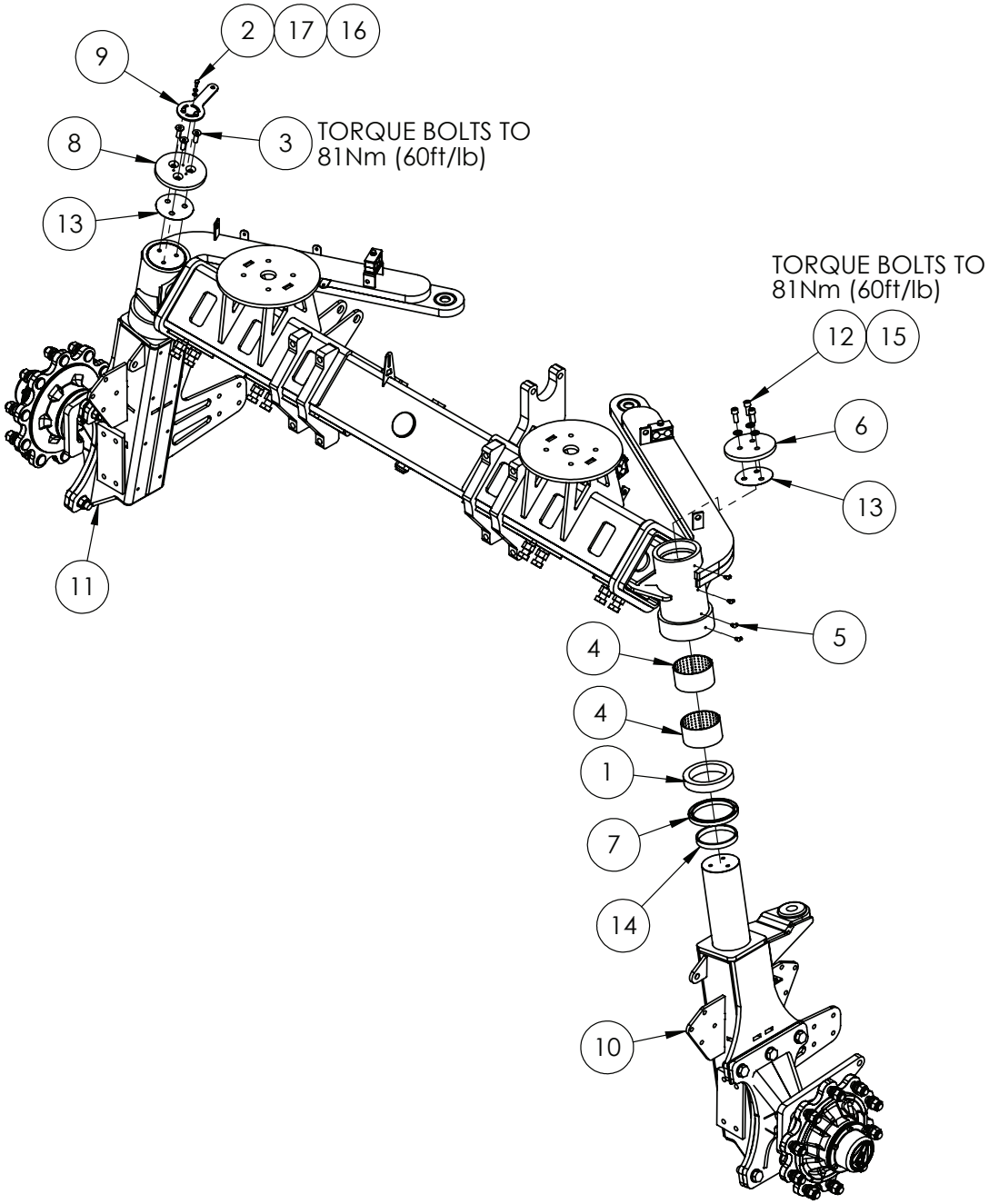

IF DESCRIPTION PREFIX IS ASSEMBLY DRAWING ONLY OR PRODUCTION DRAWING ONLY THE ITEM IS NOT FOR SALE			
ITEM	PART NUMBER	DESCRIPTION	QTY
1	GA5048245	BEARING BALL THRUST 51122	2
2	GA5004041	BOLT M6 X 16 GR8.8 ZP	3
3	GA5069080	CSCS M12 X 35 GR12.9 ZP	3
4	GA5009454	GLACIER BUSH - M LINER 110	4
5	GA5009637	GREASE NIPPLE, ELBOW, 90 DEGREE, 1/4" UNF MALE	8
6	2M-FA011LAS	KING PIN RETAINING CAP, BOLT ON	1
7	GA5048635	OIL SEAL 145 X 120 X 12	2
8	GA4415325	PLATE, KING PIN RETAINING CAP, BOLT ON, STEER ANGLE, ADJUSTIBLE AXLES, FRONT, G4 S2	1
9	GA4415365	PLATE, STEER ANGLE SENSOR, FRONT AXLE, OUTER KING PIN MOUNTED, G4 S2	1
10	GA4952690	PRODUCTION DRAWING ONLY. DROP LEG, LHS, CAMBER ADJUSTIBLE, FRONT 2WD, 3000-4000mm AXLE, G4 S2 MY24	1
11	GA4952695	PRODUCTION DRAWING ONLY. DROP LEG, LHS, CAMBER ADJUSTIBLE, FRONT 2WD, 3000-4000mm AXLE, G4 S2 MY24	1
12	GA5000307	SHCS M12 X 30 GR12.9 ZP	3
13	F70544A	SHIM PLATE FOR 2WD FRONT AXLES	2
14	2MFA004-IGR	SPACER RING/THRUST BEARING MOUNT FOR 2WD FRONT AXLES	2
15	GA5000577	WASHER 12mm FLAT SS HD	3
16	GA5004437	WASHER 6mm FLAT SS	3
17	GA5004447	WASHER 6mm SPRING SS	3
GA4952265-03 GOLDACRES	ASSEMBLY DRAWING ONLY. FRONT AXLE ASSY, 3000-4000mm WIDE, G4 S2, MY24		REV 00

Front Axle, 2WD, 3-4mt Adjustable, Brake & Brake Line Assembly

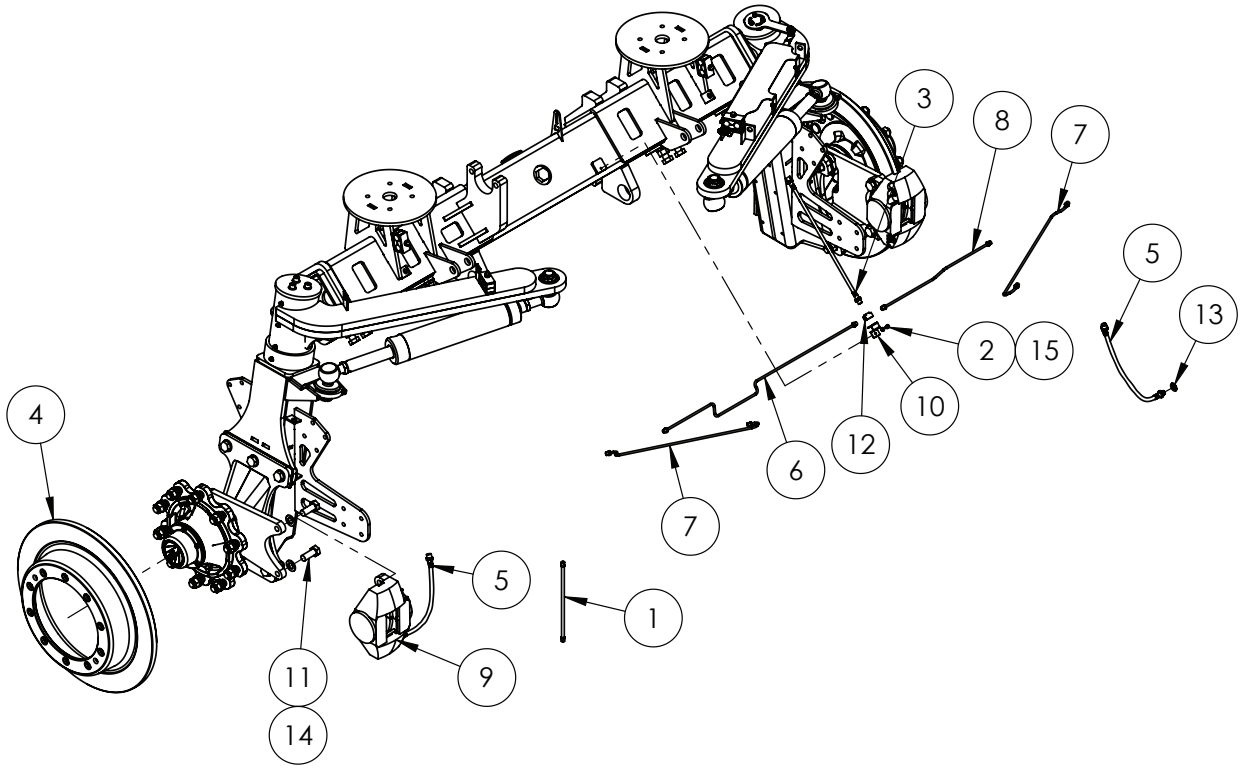

TORQUE BOLTS TO
450Nm (332ft/lb)
LOCTITE 243.

IF DESCRIPTION PREFIX IS ASSEMBLY DRAWING ONLY OR PRODUCTION DRAWING ONLY THE ITEM IS NOT FOR SALE			
ITEM	PART NUMBER	DESCRIPTION	QTY
1	GA4952570	ASSEMBLY DRAWING ONLY. BRAKE LINE ASSEMBLY, DROPLEG STANDARD, G4	2
2	GA5004029	BOLT M6 X 10 GR8.8 ZP	1
3	GA5025923	BRAIDED BRAKE HOSE, CHASSIS TO AXLE, STD AXLE, 470mm LONG, DOT 4	1
4	GA5070066	BRAKE DISC ROTOR, CAST, 335 PCD, 600mm OD, 292 CENTRE BORE, G4 4WD	2
5	GA5025919	BRAKE HOSE, DROP LEG TO CALIPER, 470mm, DOT 4	2
6	GA4913310	BRAKE LINE ASSEMBLY, FRONT LH, 3-4M G3 G4	1
7	GA4913300	BRAKE LINE ASSEMBLY, FRONT OUTER, 3-4M G3 G4	2
8	GA4913305	BRAKE LINE ASSEMBLY, FRONT RH, 3-4M G3 G4	1
9	GA5016069	BRAKE CALIPER, 2 X 75mm, SUIT BRAKE FLUID, STILFRENI	2
10	HYD002LAS	CLAMP BRACKET, HYDRAULIC FITTING	1
11	GA5001515	M20X1.5PX50 HT BOLT	4
12	GA5008793	TEE, FLARE, 7/16" 24 TPI FEMALE THREAD, SUIT 1/4" TUBE	1
13	GA5007475	WASHER 12 X 22mm COPPER	2
14	GA5001741	WASHER 20mm FLAT SS HD	4
15	GA5004437	WASHER 6mm FLAT SS	1
GA4952265-04 GOLDACRES		ASSEMBLY DRAWING ONLY. FRONT AXLE ASSY, 3000-4000mm WIDE, G4 S2, MY24	REV 00

Front Axle, 2WD, 3-4mt Adjustable, Linear Sensor & Phasing Cylinder

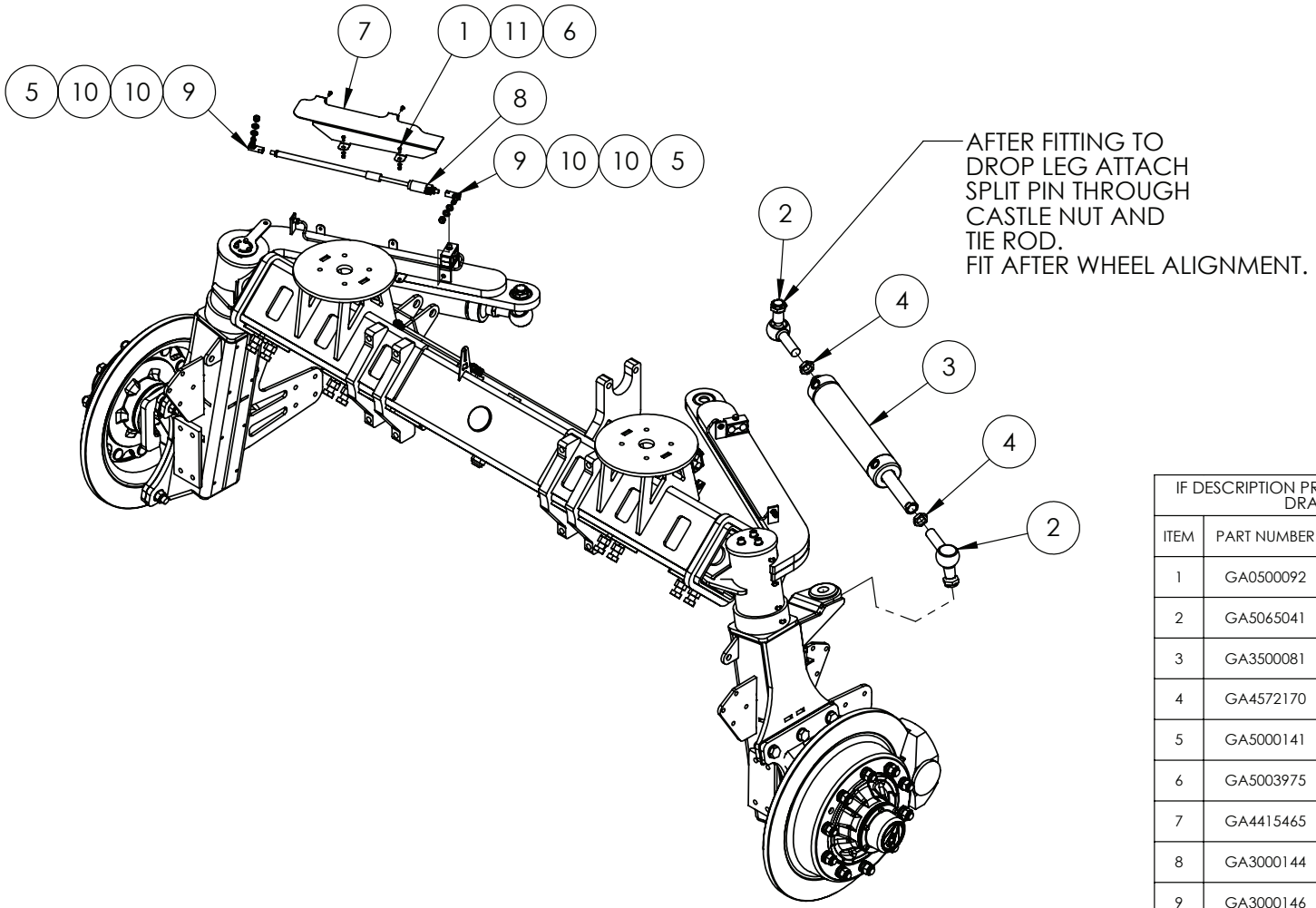

IF DESCRIPTION PREFIX IS ASSEMBLY DRAWING ONLY OR PRODUCTION DRAWING ONLY THE ITEM IS NOT FOR SALE			
ITEM	PART NUMBER	DESCRIPTION	QTY
1	GA0500092	BHCS M5 X 12 GR12.9 ZP	4
2	GA5065041	BALL JOINT, RIGHT ANGLE, M28X1.5	4
3	GA3500081	HYDRAULIC PHASING CYLINDER, STEERING, 3-4m, G3 G4	2
4	GA4572170	LOCK NUT, M28 X 1.5, SUIT TIE ROD END	4
5	GA5000141	NUT M10 NYLOC ZP	2
6	GA5003975	NUT M5 NYLOC SS	4
7	GA4415465	PLATE, COVER, STEERING ANGLE SENSOR, 3-4m ADJUSTIBLE AXLES, G4 S2	1
8	GA3000144	SENSOR, LINEAR NON CONTACT, STEERING, 250mm, RAVEN	1
9	GA3000146	STUD END, M10 SUIT GA3000144, RAVEN	2
10	GA5000117	WASHER 10mm FLAT SS HD	4
11	GA5003983	WASHER 5mm FLAT SS	4
GA4952265-04 GOLDACRES	ASSEMBLY DRAWING ONLY. FRONT AXLE ASSY, 3000-4000mm WIDE, G4 S2, MY24		REV 00

Front Axle, 2WD, 3-4mt Adjustable, Torque Rods & Shock Absorber

CLEAN ALL BOLTS WITH LOCTITE 7471 AND APPLY LOCTITE 243. (ITEM 6)

FIT LOWER RODS FIRST AND TORQUE BOLTS TO 407Nm (300ft/lb)

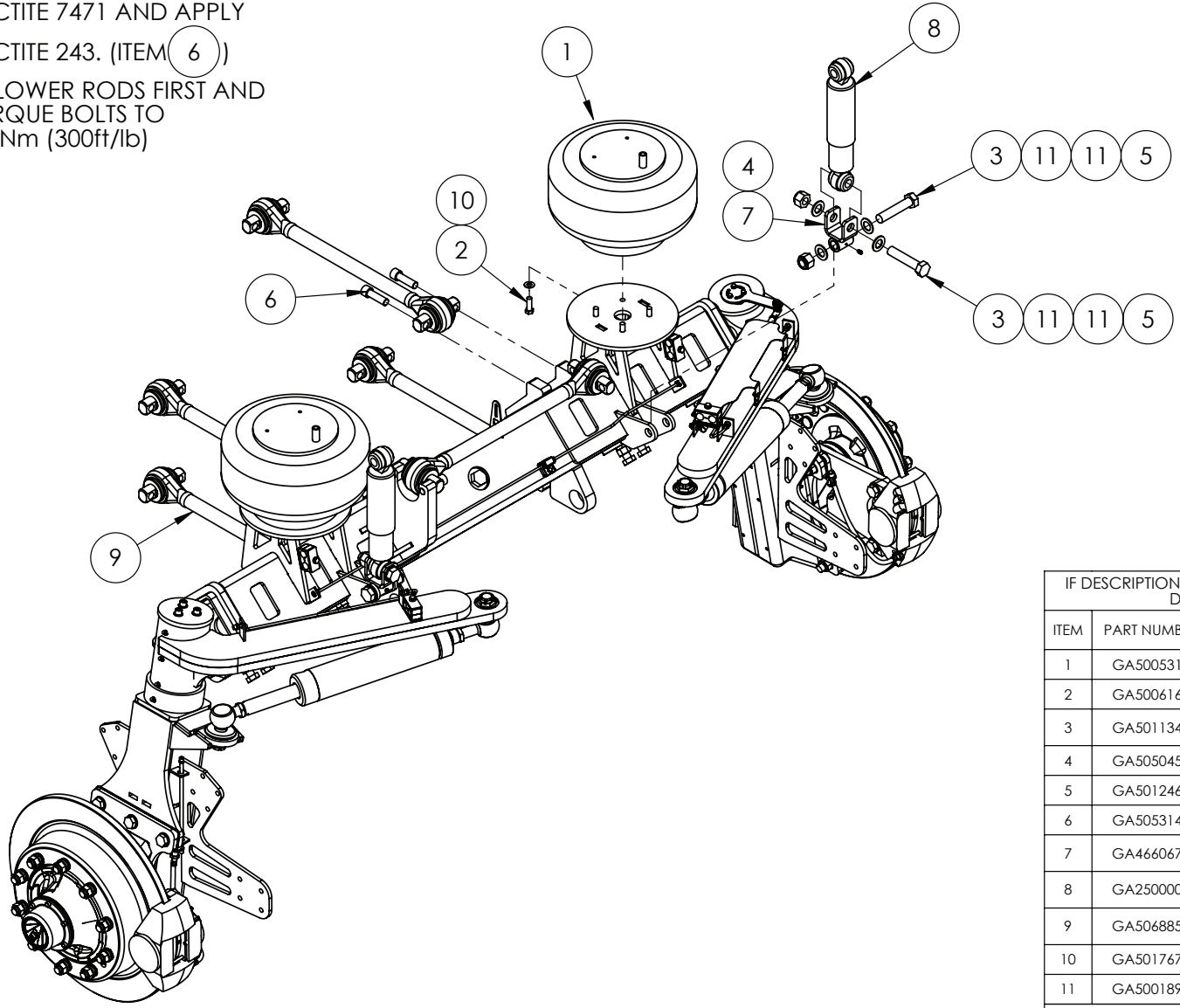

IF DESCRIPTION PREFIX IS ASSEMBLY DRAWING ONLY OR PRODUCTION DRAWING ONLY THE ITEM IS NOT FOR SALE			
ITEM	PART NUMBER	DESCRIPTION	QTY
1	GA5005311	AIR SPRING HT230 SINGLE AIR STUD	2
2	GA5006167	BOLT 1/2 UNC X 1 1/2 GR8 ZP	8
3	GA5011346	BOLT M24 X 115 GR8.8 ZP SPECIAL 75 TO 77mm SHANK	4
4	GA5050450	GREASE NIPPLE, 6mm	2
5	GA5012469	NUT M24 NYLOC ZP	4
6	GA5053145	SHCS 3/4 UNF X 2 1/2 GR12.9 ZP BLUE	10
7	GA4660670	SHOCK ABSORBER MOUNT, FRONT AXLE, SELF PROPELLED 2015	2
8	GA2500000	SHOCK ABSORBER, SUSPENSION DAMPER, BLACK, MONROE	2
9	GA5068850	SUSPENSION LINK, TORQUE ROD, 650mm CENTRE, HOLLOW, ATRO	5
10	GA5017673	WASHER 1/2" HIGH TENSILE	8
11	GA5001891	WASHER 24mm FLAT HD SS	8
GA4952265-05 GOLDACRES	ASSEMBLY DRAWING ONLY. FRONT AXLE ASSY, 3000-4000mm WIDE, G4 S2, MY24		REV 00.B

Front Axle, 2WD, 3-4mt Adjustable, Drop Leg, Hub Mounting, LH

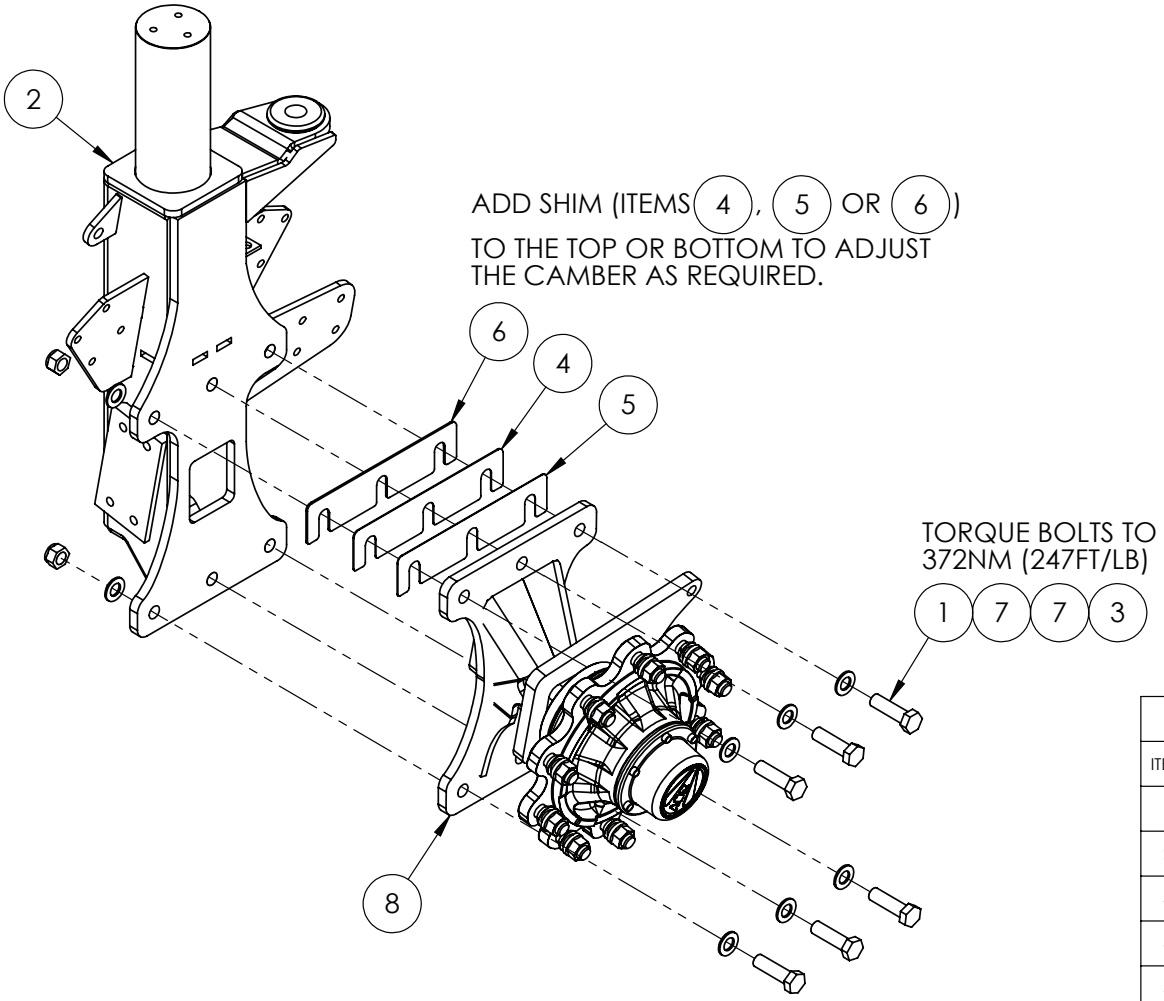

IF DESCRIPTION PREFIX IS ASSEMBLY DRAWING ONLY OR PRODUCTION DRAWING ONLY THE ITEM IS NOT FOR SALE			
ITEM	PART NUMBER	DESCRIPTION	QTY
1	GA5001565	BOLT M20 X 70 GR8.8 ZP	6
2	GA4604740	DROPLEG FRONT LH STANDARD, G3 G4	1
3	GA5048125	NUT M20 NYLOC COARSE ZP	4
4	GA4414845	PLATE, SHIM, 1.6mm CAMBER ADJUSTIBLE, G4 S2	1
5	GA4414840	PLATE, SHIM, 1mm CAMBER ADJUSTIBLE, G4 S2	1
6	GA4414855	PLATE, SHIM, 3mm CAMBER ADJUSTIBLE, G4 S2	1
7	GA5001741	WASHER 20mm FLAT SS HD	10
8	GA4604570	WHEEL END, CAMBER ADJUSTIBLE, FRONT 2WD DROP LEG, LHS, G4 S2	1
GA4952690 GOLDACRES		PRODUCTION DRAWING ONLY. DROP LEG, LHS, CAMBER ADJUSTIBLE, FRONT 2WD, 3000-4000mm AXLE, G4 S2 MY24	REV 00

Front Axle, 2WD, 3-4mt Adjustable, Drop Leg, Hub Mounting, RH

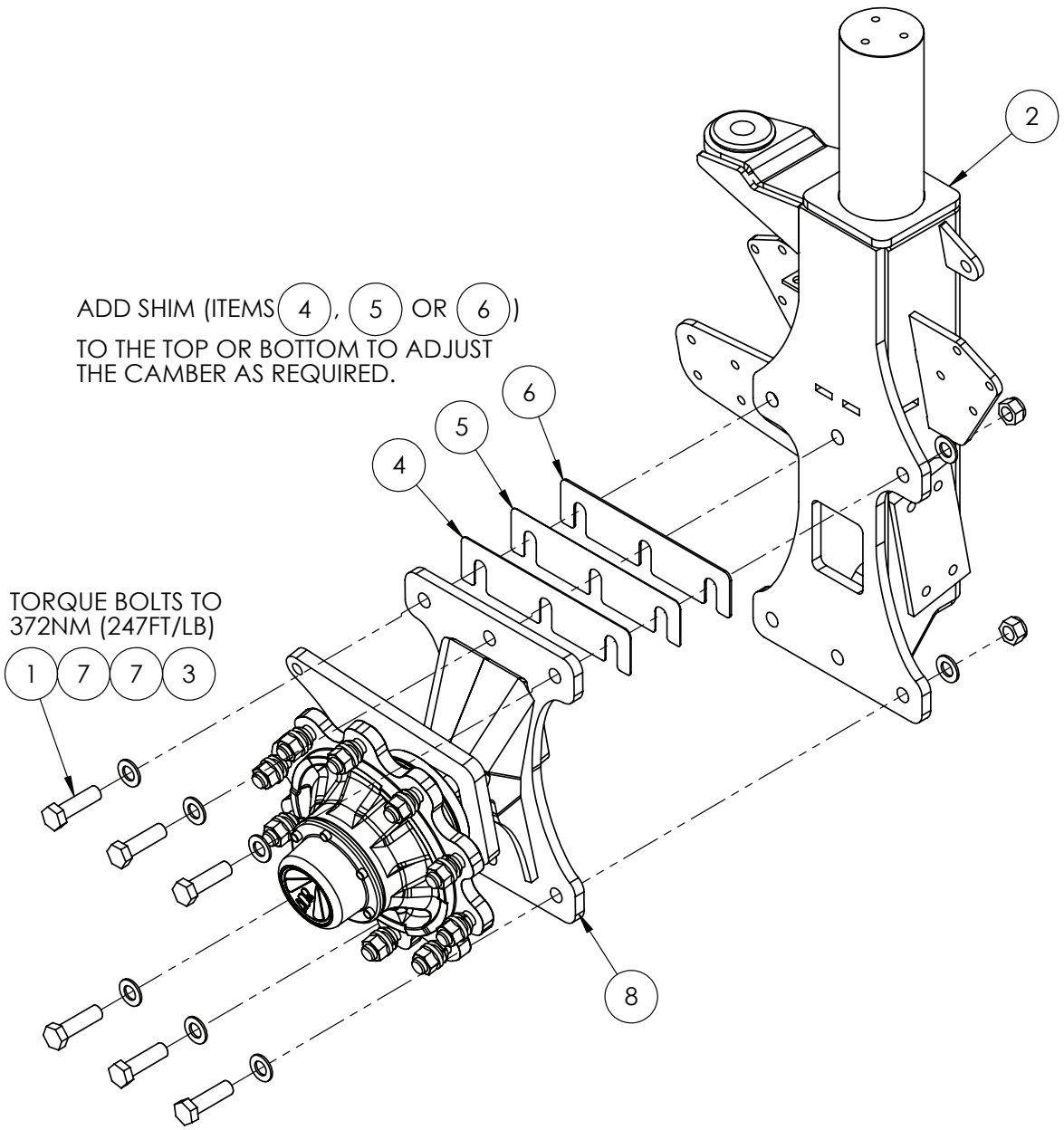

IF DESCRIPTION PREFIX IS ASSEMBLY DRAWING ONLY OR PRODUCTION DRAWING ONLY THE ITEM IS NOT FOR SALE			
ITEM	PART NUMBER	DESCRIPTION	QTY
1	GA5001565	BOLT M20 X 70 GR8.8 ZP	6
2	GA4604750	DROP LEG, RHS, CAMBER ADJUSTIBLE, FRONT 2WD, EXTENDABLE 3-4M, DROP LEG, G4 S2	1
3	GA5048125	NUT M20 NYLOC COARSE ZP	4
4	GA4414845	PLATE, SHIM, 1.6mm CAMBER ADJUSTIBLE, G4 S2	1
5	GA4414840	PLATE, SHIM, 1mm CAMBER ADJUSTIBLE, G4 S2	1
6	GA4414855	PLATE, SHIM, 3mm CAMBER ADJUSTIBLE, G4 S2	1
7	GA5001741	WASHER 20mm FLAT SS HD	10
8	GA4604595	WHEEL END, CAMBER ADJUSTIBLE, FRONT 2WD DROP LEG, RHS, G4 S2	1
GA4952695 GOLDACRES		PRODUCTION DRAWING ONLY. DROP LEG, LHS, CAMBER ADJUSTIBLE, FRONT 2WD, 3000-4000mm AXLE, G4 S2 MY24	REV 00

Hub, 90 Series, Un-Braked, G4 Series 2

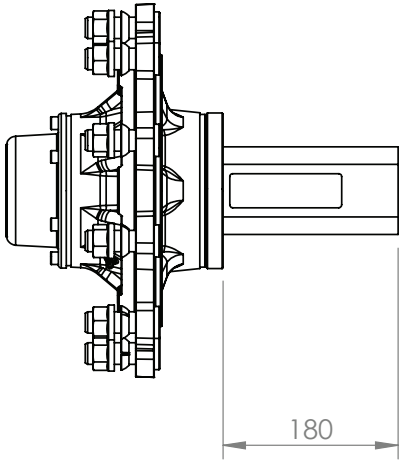

CUT DOWN GA5068826 TO THE BELOW MEASUREMENT

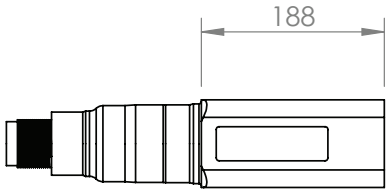

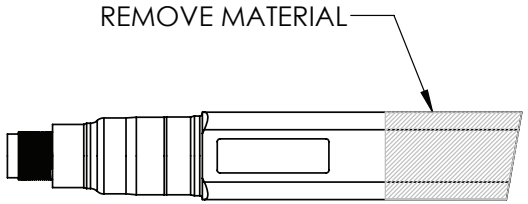

NOTE: Measure the cross section to determine size/series

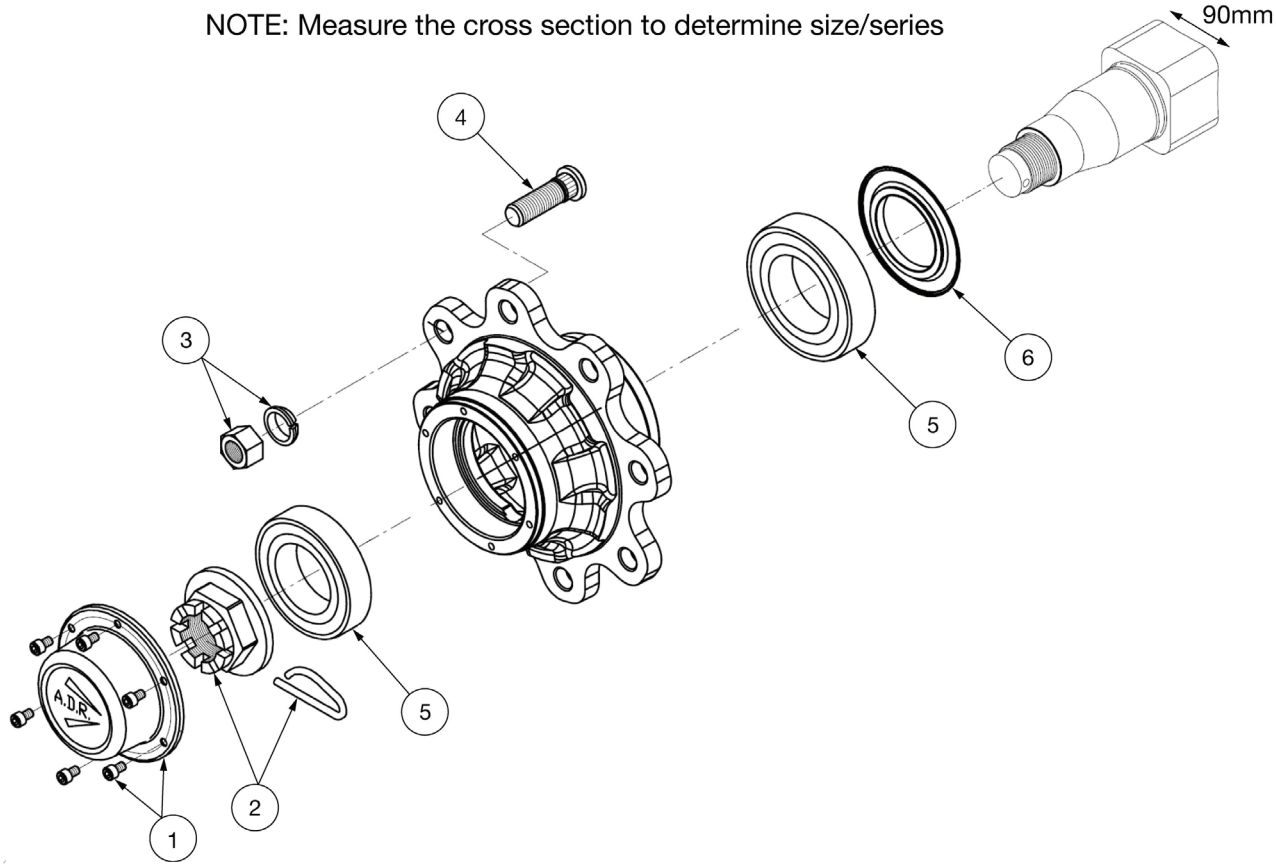

IF DESCRIPTION PREFIX IS ASSEMBLY DRAWING ONLY OR PRODUCTION DRAWING ONLY THE ITEM IS NOT FOR SALE			
ITEM	PART NUMBER	DESCRIPTION	QTY
-	GA5068826	ADR 90 SERIES STUB AXLE 10 STUD ON 335 PCD	-
1	GA5052120	CAP KIT, 90 SERIES, ADR	1
2	GA5052190	CROWN NUT KIT, 80/90 SERIES, ADR	1
3	GA5052165	WHEEL NUT & WASHER KIT, M22 X 1.5mm, SUIT 90, 110 & 150 SERIES, 10 PACK	-
	GA5018892	WHEEL NUT AND WASHER, M22 X 1.5mm, QTY 1 EACH	8
	GA5018900	TAPERED SPRING WASHERS SUIT M22 WHEEL STUD (329F003)	8
-	GA5054675	CAP M20 HEX WHEEL NUT COVER	8
4	GA5052205	STUD WHEEL KIT, M22 X 1.5 X 70, 90, 100, 110 SERIES, ADR (SET OF 10)	1
5	GA5052200	BEARING KIT, 90 SERIES, ADR	1
6	GA5066405	SEAL, HEAVY DUTY, SUIT ADR 90 SERIES AXLES (EACH), 160 X 82 X 18mm	1
GA5078890 GOLDACRES		ADR 90 SERIES STUB AXLE 10 STUD ON 335 PCD, G4 S2	REV 00

Front Axle, 4WD, 3mt

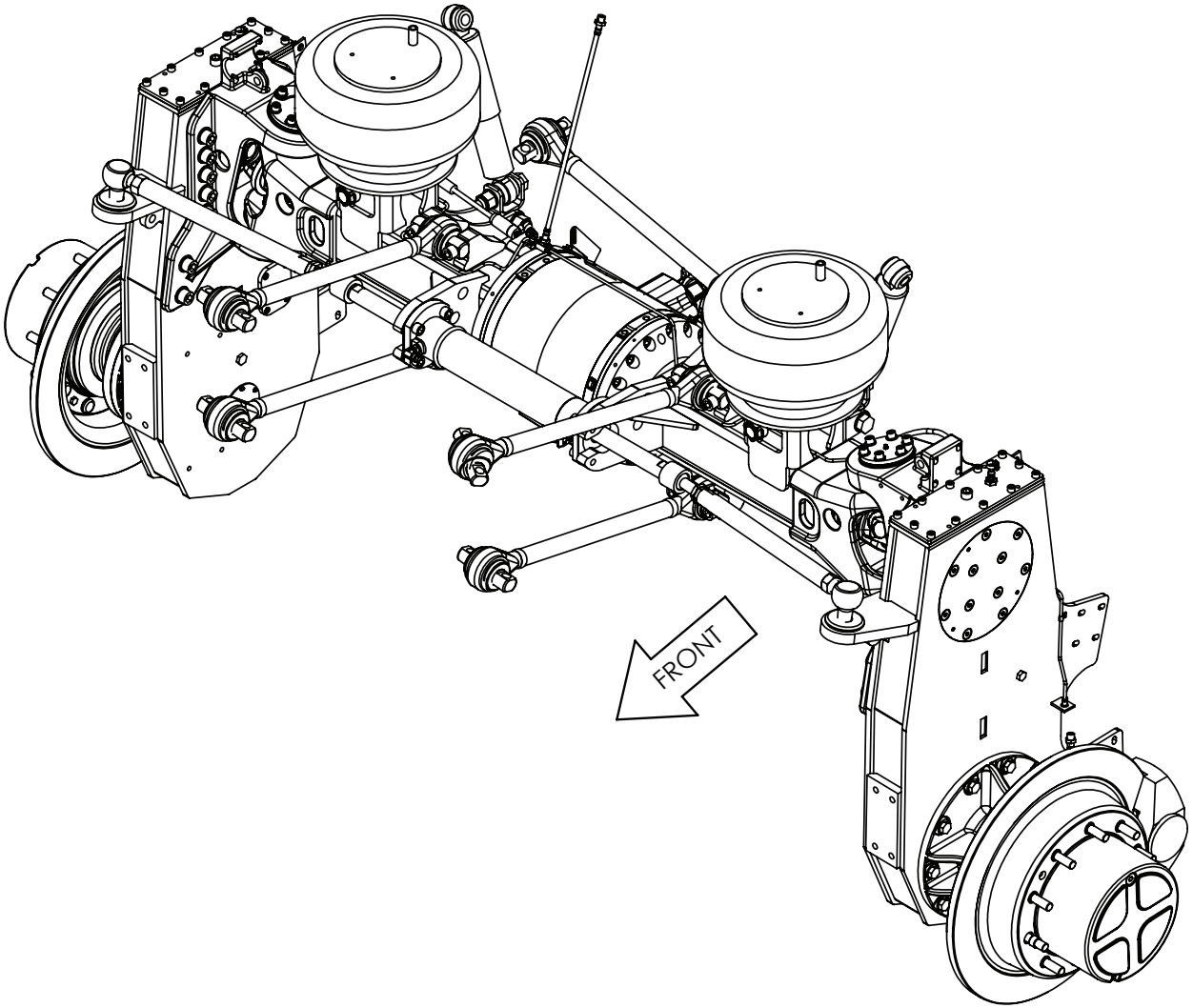

BUILD OPTIONS:
40079 - FOUR WHEEL DRIVE (4WD) WITH FIXED WHEEL TRACK SET TO 3000mm.

GA4951925 GOLDACRES	ASSEMBLY DRAWING ONLY. FRONT AXLE, 4X4 ASSY, 3000mm WIDE, G4 S2, MY24	REV 00

Axle Housing Assembly, 4WD, 3mt, Front, LH

LEFT HAND SIDE

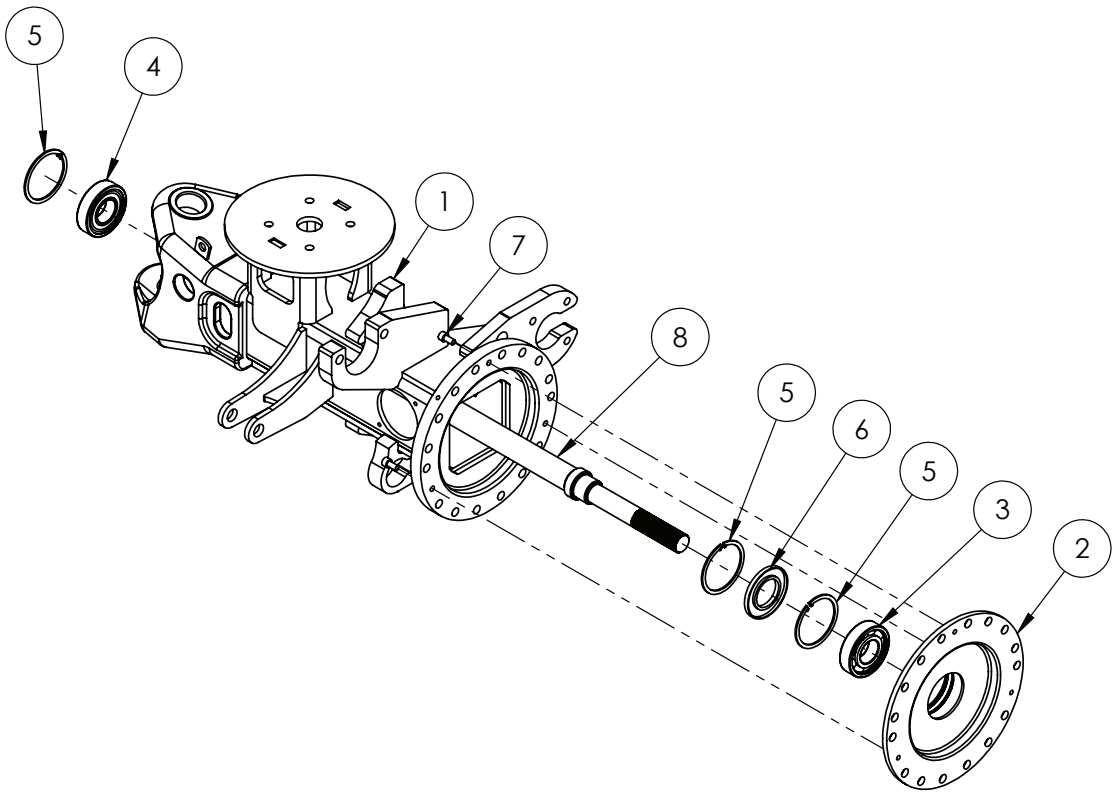

IF DESCRIPTION PREFIX IS ASSEMBLY DRAWING ONLY OR PRODUCTION DRAWING ONLY THE ITEM IS NOT FOR SALE			
ITEM	PART NUMBER	DESCRIPTION	QTY
1	GA4661275	AXLE HOUSING, 4WD FRONT LH, G3 G4	1
2	GA4550940	BEARING HOUSING, DIFF CENTRE, 4WD FRONT, G3 G4	1
3	GA1700025	BEARING, DEEP GROOVE BALL, NON SEALED, 6309, SKF	1
4	GA1700026	BEARING, DEEP GROOVE BALL, SEALED, 6309-2RS, SKF	1
5	GA5070210	CIRCLIP, 100mm METRIC, INTERNAL	3
6	GA5070195	OIL SEAL 100X55X8	1
7	GA5011153	SHCS M10 X 20 GR12.9 ZP	3
8	GA4550925	SHAFT, INTERNAL DRIVE, 3m 4WD, LH LONG, G4	1
GA4951925-01 GOLDACRES		ASSEMBLY DRAWING ONLY. AXLE HOUSING FRONT LH, G4 S2, MY24	REV 00

Axle Housing Assembly, 4WD, 3mt, Front, RH

RIGHT HAND SIDE

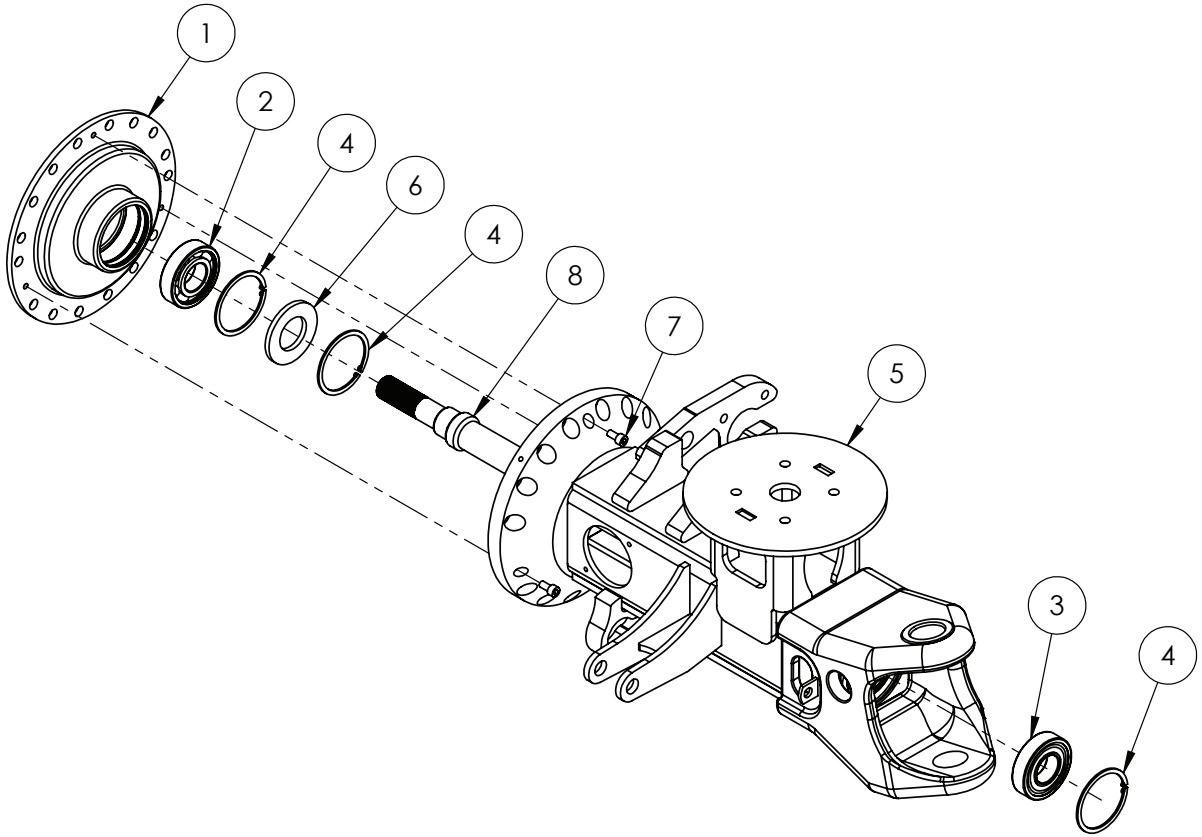

IF DESCRIPTION PREFIX IS ASSEMBLY DRAWING ONLY OR PRODUCTION DRAWING ONLY THE ITEM IS NOT FOR SALE			
ITEM	PART NUMBER	DESCRIPTION	QTY
1	GA4550940	BEARING HOUSING, DIFF CENTRE, 4WD FRONT, G3 G4	1
2	GA1700025	BEARING, DEEP GROOVE BALL, NON SEALED, 6309, SKF	1
3	GA1700026	BEARING, DEEP GROOVE BALL, SEALED, 6309-2RS, SKF	1
4	GA5070210	CIRCLIP, 100mm METRIC, INTERNAL	3
5	GA2500006	LHS AXLE TUBE, FRONT, 4 X 4, G4 S2	1
6	GA5070195	OIL SEAL 100X55X8	1
7	GA5011153	SHCS M10 X 20 GR12.9 ZP	3
8	GA4550920	SHAFT, INTERNAL DRIVE, 3m 4WD, RH SHORT, G4	1
GA4951925-02 GOLDACRES		ASSEMBLY DRAWING ONLY.FRONT AXLE, 4X4 ASSY, 3000mm WIDE, G4 S2, MY24	REV 00

Front Axle Housings to Differential Centre Mounting, 4WD, 3mt

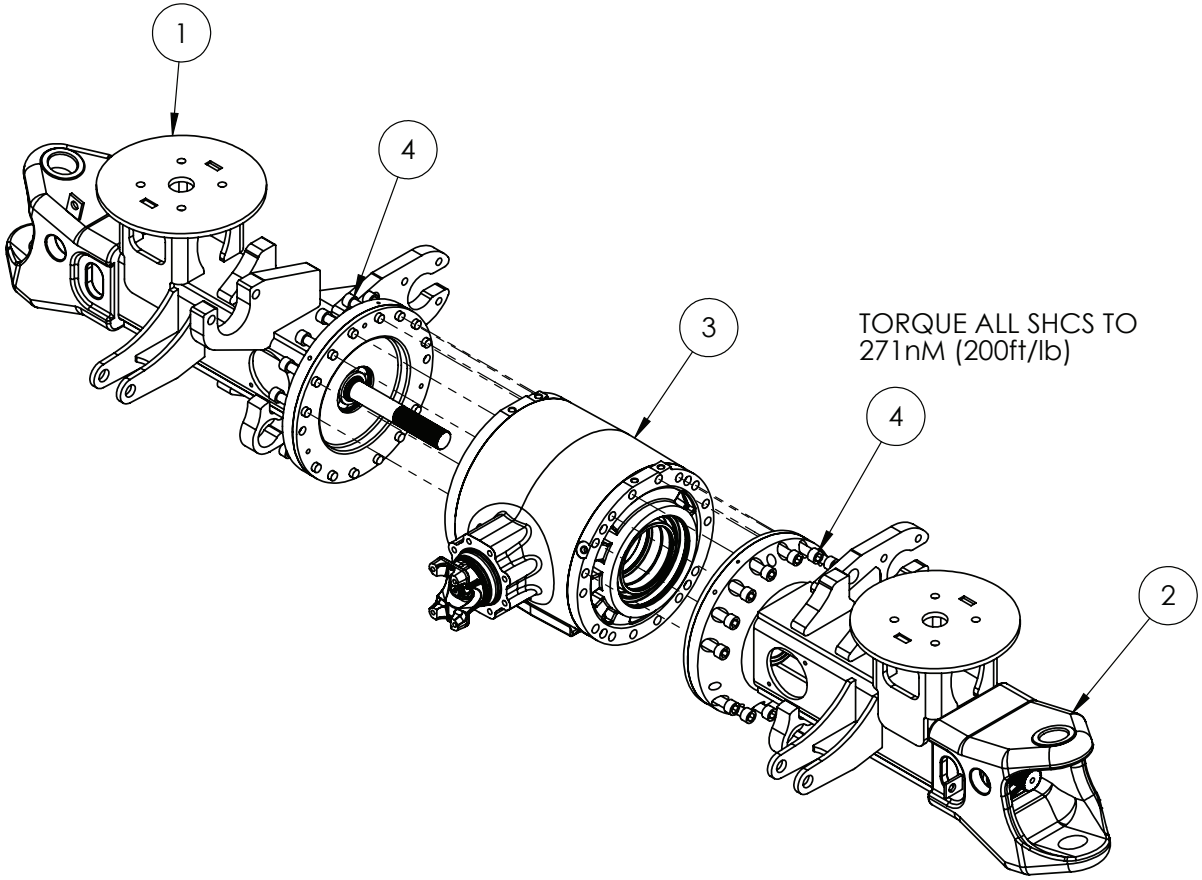

IF DESCRIPTION PREFIX IS ASSEMBLY DRAWING ONLY OR PRODUCTION DRAWING ONLY THE ITEM IS NOT FOR SALE			
ITEM	PART NUMBER	DESCRIPTION	QTY
1	GA4951925-01	ASSEMBLY DRAWING ONLY.FRONT AXLE, 4X4 ASSY, 3000mm WIDE, G4 S2, MY24	1
2	GA4951925-02	ASSEMBLY DRAWING ONLY.FRONT AXLE, 4X4 ASSY, 3000mm WIDE, G4 S2, MY24	1
3	GA5071175	DIFF CENTRE, 3.364:1 RATIO, SOFT ENGAGE DIFF, G3 G4, JCB, 485-20754	1
4	GA5011305	SHCS M16 X 70 GR12.9 ZP	28
GA4951925-03 GOLDACRES		ASSEMBLY DRAWING ONLY.FRONT AXLE, 4X4 ASSY, 3000mm WIDE, G4 S2, MY24	REV 00

Front Axle, 4WD, 3mt, King Pin Assembly

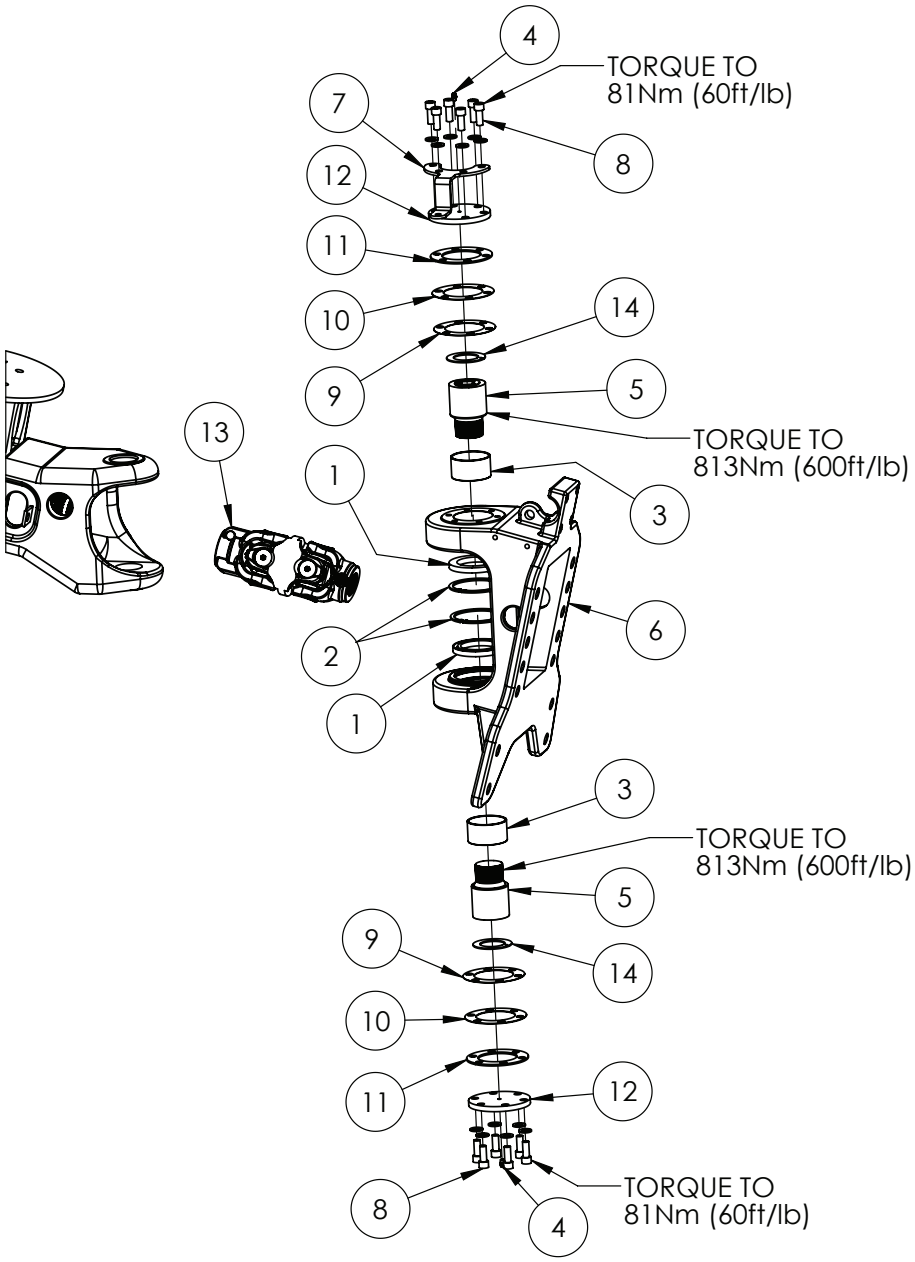

IF DESCRIPTION PREFIX IS ASSEMBLY DRAWING ONLY OR PRODUCTION DRAWING ONLY THE ITEM IS NOT FOR SALE			
ITEM	PART NUMBER	DESCRIPTION	QTY
1	GA5018907	BEARING SEAL - 100X70X10	4
2	GA5070210	CIRCLIP, 100mm METRIC, INTERNAL	4
3	GA5009481	GLACIER BUSH, 70 ID X 75 OD X 40 LONG	4
4	GA5012203	GREASE NIPPLE 1/4" UNF SHORT	4
5	MACH0039	KING PIN, SUIT 4WD AXLE	4
6	GA4550300	KINGPIN HOUSING, CAST OUTER, 4WD FRONT, MY15	2
7	GA4407085	PLATE, STEERING SENSOR ROD MOUNT, 4WD AXLE, G6 MY20	1
8	GA5000307	SHCS M12 X 30 GR12.9 ZP	24
9	STEERSHIM-MK2-0.5MM	STEER SHIM, (0.5mm FMS)	4
10	STEERSHIM-MK2-1MM	STEER SHIM, (1mm FMS), SUIT 4WD	4
11	STEERSHIM-MK2-3MM	STEER SHIM, (3mm FMS)	4
12	DL24	STEERING ASSEMBLY TOP CAP	4
13	GA2700225	UNIVERSAL JOINT, DOUBLE, 4WD, G4, EUROCARDAN	2
14	GA5009489	WASHER, GLACIER, 48 ID X 74 OD	4
15	GA5000577	WASHER 12mm FLAT SS HD	24
GA4951925-04 GOLDACRES	ASSEMBLY DRAWING ONLY.FRONT AXLE, 4X4 ASSY, 3000mm WIDE, G4 S2, MY24		REV 01

Front Axle, 4WD, 3mt, Drop Leg to Axle Mounting

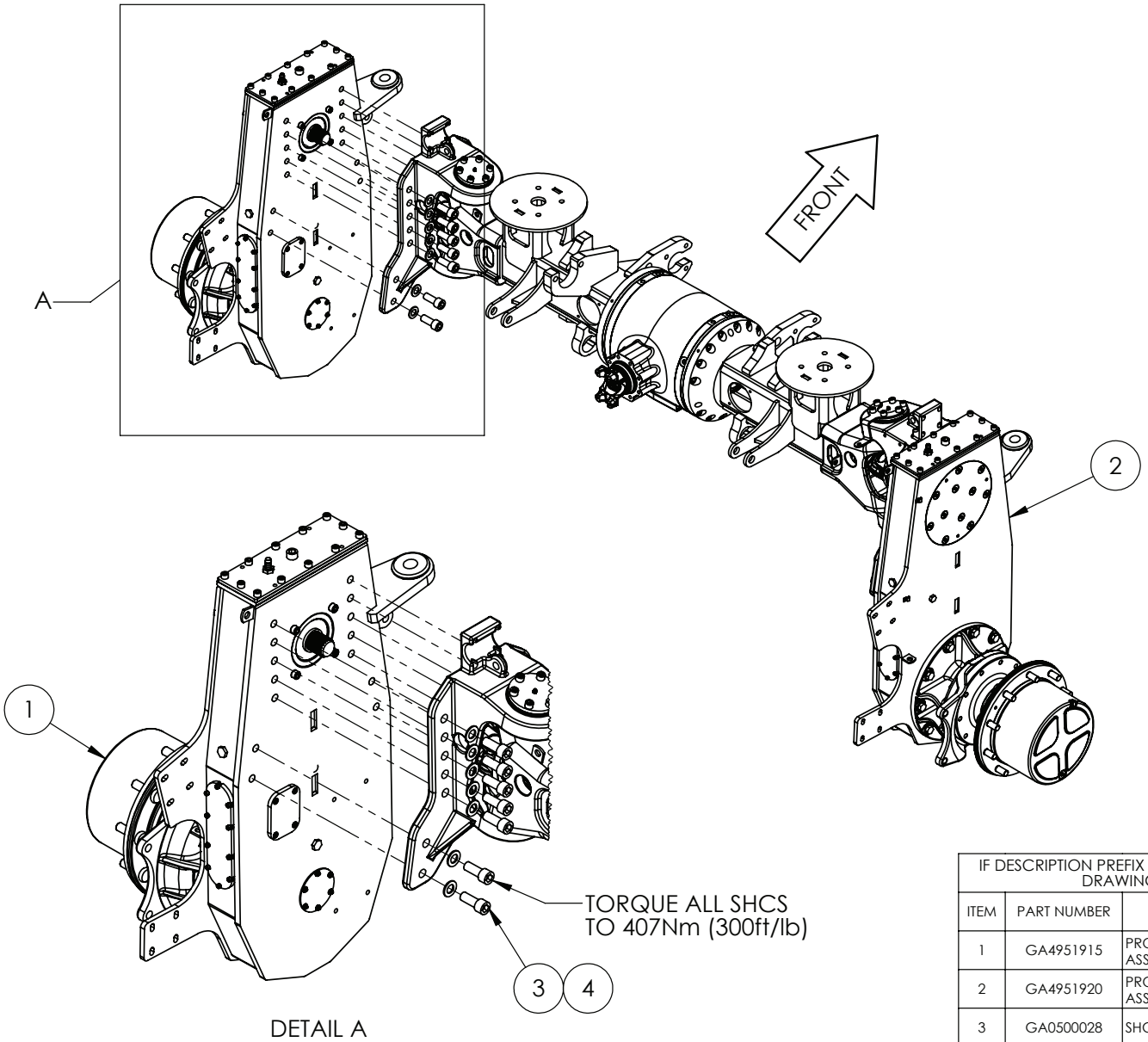

IF DESCRIPTION PREFIX IS ASSEMBLY DRAWING ONLY OR PRODUCTION DRAWING ONLY THE ITEM IS NOT FOR SALE			
ITEM	PART NUMBER	DESCRIPTION	QTY
1	GA4951915	PRODUCTION DRAWING ONLY. DROP LEG, 4 X 4 ASSEMLY LHS, FRONT, G4 S2 MY24	1
2	GA4951920	PRODUCTION DRAWING ONLY. DROP LEG, 4 X 4 ASSEMLY RHS, FRONT, G4 S2	1
3	GA0500028	SHCS, M20 X 50, ZP GR12.9	28
4	GA5001741	WASHER 20mm FLAT SS HD	28
GA4951925-05 GOLDACRES		ASSEMBLY DRAWING ONLY. FRONT AXLE, 4X4 ASSY, 3000mm WIDE, G4 S2, MY24	REV 00

Front Axle, 4WD, 3mt, Steering Cylinder Assembly

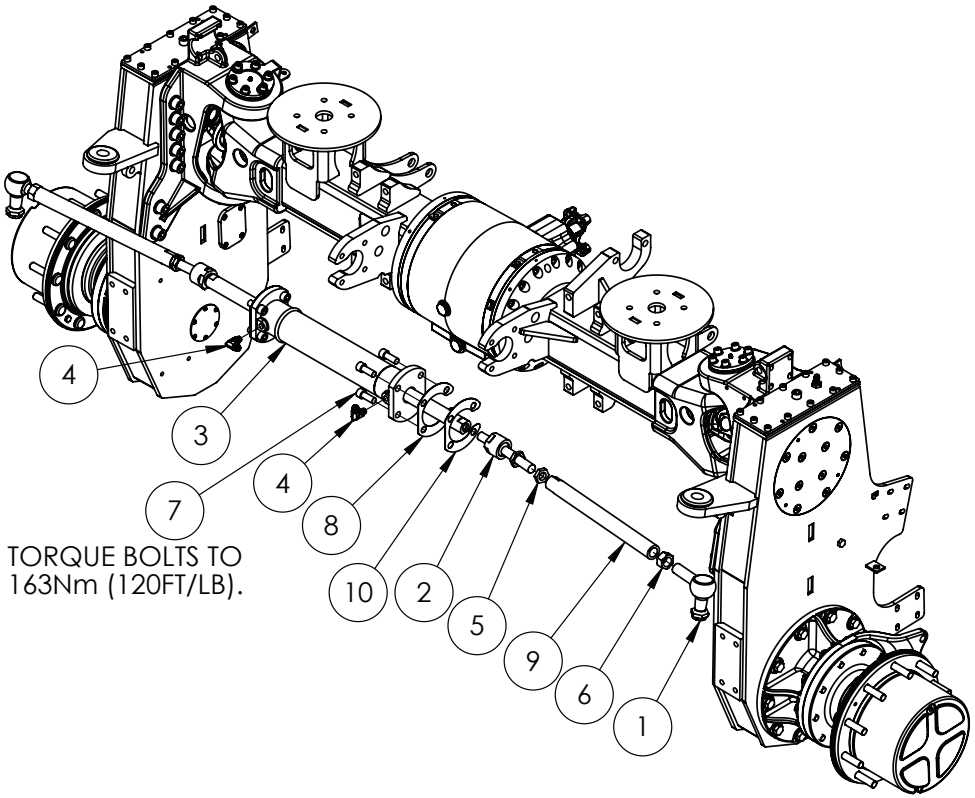

IF DESCRIPTION PREFIX IS ASSEMBLY DRAWING ONLY OR PRODUCTION DRAWING ONLY THE ITEM IS NOT FOR SALE			
ITEM	PART NUMBER	DESCRIPTION	QTY
1	GA5065041	BALL JOINT, RIGHT ANGLE, M28X1.5	2
2	GA5065045	BALL JOINT, INLINE, M24 X 1.5 PITCH X M22 X 1.5 PITCH	2
3	GA3500056	HYDRAULIC CYLINDER, STEERING 14" STROKE, FLANGE BOTH ENDS, 9/16" UNO PORTS	1
4	GA3500802	HYDRAULIC ADAPTOR, ELBOW, 90 DEGREE, 3/4" JIC MALE X 9/16" UN MALE O-RING, S91-1209	2
5	GA5011341	NUT M24 X 1.5P LOCK ZP	2
6	GA4553195	NUT, M28 X 1.5, 20mm WIDE, ZP	2
7	GA5000925	SHCS M16 X 40 GR12.9 ZP	8
8	GA4514640	STEERING RAM SHIM PLATE	2
9	GA4583135	TIE ROD 3m MY11	2
10	GA4000490	STEERING RAM SHIM PLATE 0.5mm	1
GA4951925-06 GOLDACRES		ASSEMBLY DRAWING ONLY. FRONT AXLE, 4X4 ASSY, 3000mm WIDE, G4 S2, MY24	REV 00.C

Front Axle, 4WD, 3mt, Linear Sensor & Air Breather

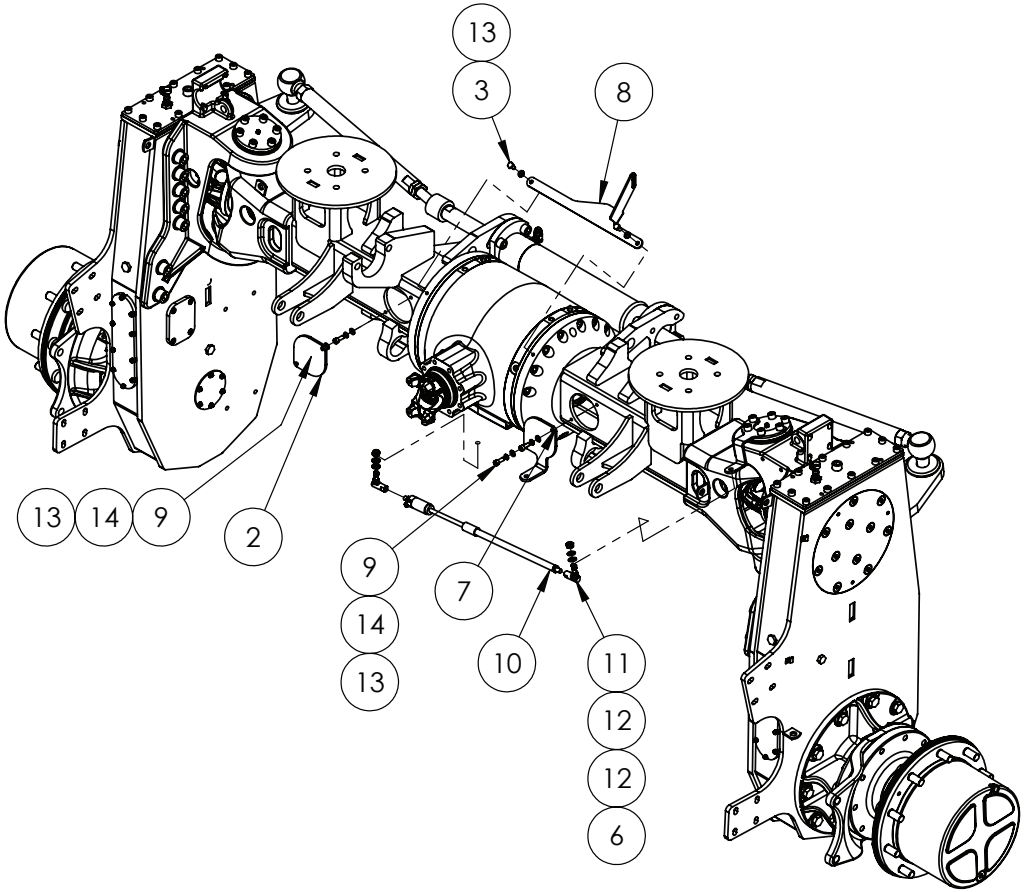

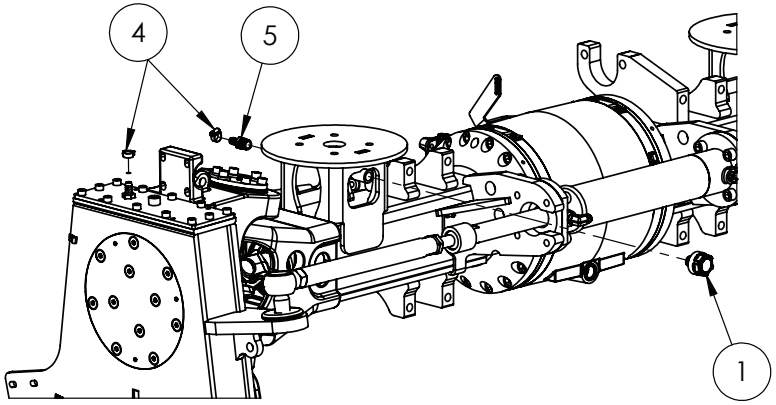

IF DESCRIPTION PREFIX IS ASSEMBLY DRAWING ONLY OR PRODUCTION DRAWING ONLY THE ITEM IS NOT FOR SALE			
ITEM	PART NUMBER	DESCRIPTION	QTY
1	GA5066770	AIR BREATHER SCREW IN STYLE 1/2"	2
2	GA4536100	AXLE COVER PLATE-DRIVE SHAFT BOLTS-4WS 4WD	1
3	GA5011465	BOLT M8 X 16 GR8.8 ZP	2
4	GA5000469	HOSE CLAMP, 1/2" SS 12-20/9W3	4
5	GA5049350	HOSE BARB, 1/2" BSP MALE X 1/2" HOSE, BRASS	2
6	GA5000141	NUT M10 NYLOC ZP	2
7	GA4413605	PLATE TRIMBLE SENSOR MOUNT, 4 X 4 FRONT AXLE, G4 S2	1
8	GA4413610	PLATE, HEIGHT CONTROL MOUNT, FRONT, 4 X 4 AXLE, G4 S2	1
9	GA5004707	SHCS M8 X 20 GR12.9 ZP	4
10	GA3000144	SENSOR, LINEAR NON CONTACT, STEERING, 250mm, RAVEN	1
11	GA3000146	STUD END, M10 SUIT GA3000144, RAVEN	2
12	GA5000117	WASHER 10mm FLAT SS HD	4
13	GA5003643	WASHER 8mm FLAT SS HD	6
14	GA5004919	WASHER 8mm SPRING SS	4
GA4951925-07 GOLDACRES	ASSEMBLY DRAWING ONLY. FRONT AXLE, 4X4 ASSY, 3000mm WIDE, G4 S2, MY24		REV 00

Front Axle, 4WD, 3mt, Brake Rotor & Brake Lines

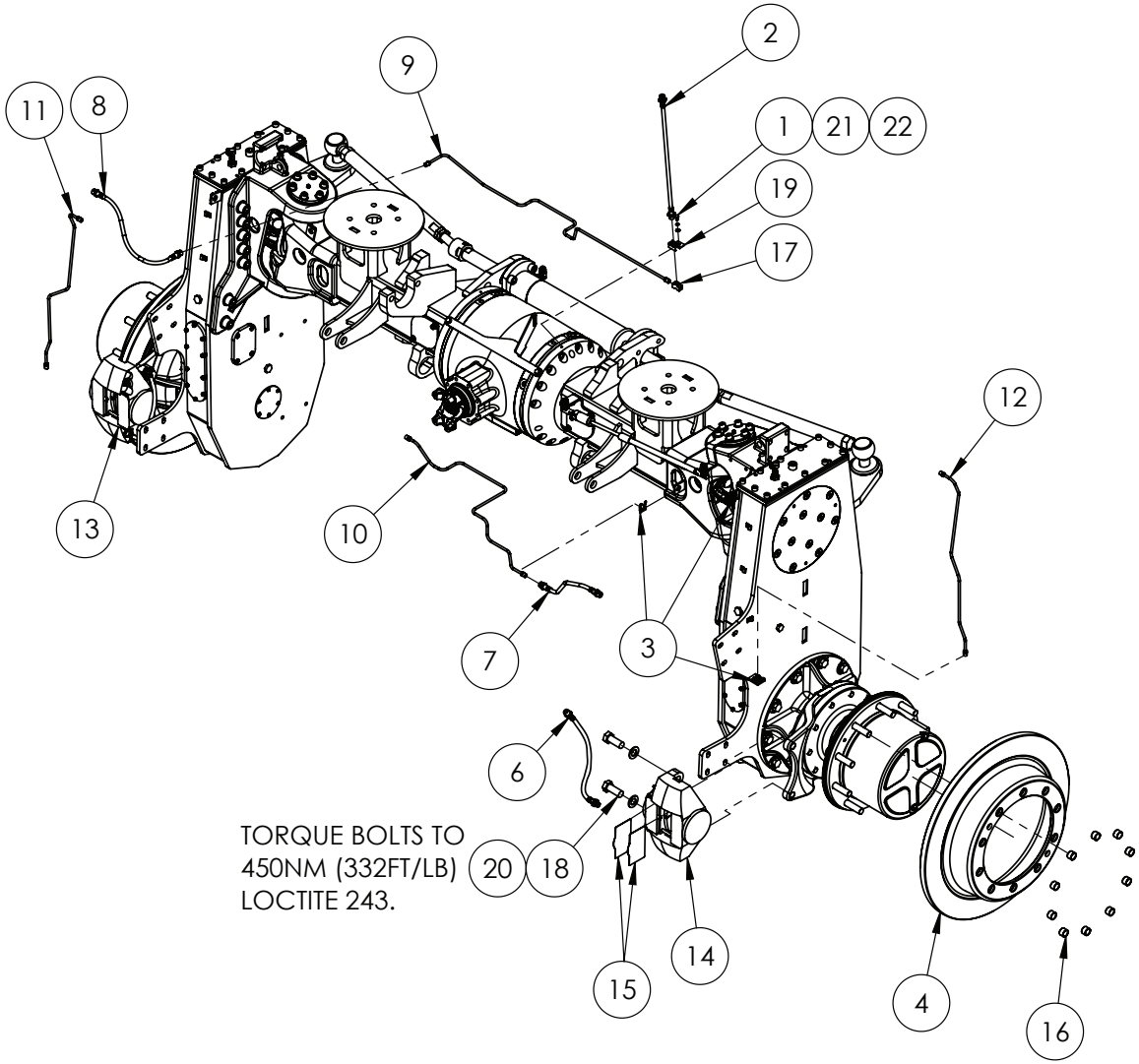

IF DESCRIPTION PREFIX IS ASSEMBLY DRAWING ONLY OR PRODUCTION DRAWING ONLY THE ITEM IS NOT FOR SALE			
ITEM	PART NUMBER	DESCRIPTION	QTY
1	GA5004029	BOLT M6 X 10 GR8.8 ZP	1
2	GA5025923	BRAIDED BRAKE HOSE, CHASSIS TO AXLE, STD AXLE, 470mm LONG, DOT 4	1
3	GA5025917	BRAKE CLIP, BRAIDED BRAKE LINE, DOT 4	6
4	GA5070066	BRAKE DISC ROTOR, CAST, 335 PCD, 600mm OD, 292 CENTRE BORE, G4 4WD	2
5	GA5025919	BRAKE HOSE, DROP LEG TO CALIPER, 470mm, DOT 4	1
6	GA5025919	BRAKE HOSE, DROP LEG TO CALIPER, 470mm, DOT 4	1
7	GA5025921	BRAKE HOSE, FRONT AXLE TO DROPLEG, 515mm LONG	1
8	GA5025921	BRAKE HOSE, FRONT AXLE TO DROPLEG, 515mm LONG	1
9	GA4954000	BRAKE LINE, 4WD, FRONT AXLE, LHS, G4 S2	1
10	GA4953995	BRAKE LINE, 4WD, FRONT AXLE, RHS, G4 S2	1
11	GA4954010	BRAKE LINE, 4WD, FRONT DROP LEG, LHS, G4 S2	1
12	GA4954005	BRAKE LINE, 4WD, FRONT DROP LEG, RHS, G4 S2	1
13	GA5016069	BRAKE CALIPER, 2 X 75mm, SUIT BRAKE FLUID, STILFRENI	1
14	GA5016069	BRAKE CALIPER, 2 X 75mm, SUIT BRAKE FLUID, STILFRENI	1
15	GA5055645	BRAKE PAD BACKING, ANTI SQUEAL, SELF ADHESIVE, PACK OF 4, SUIT SELF PROPELLED	4
16	GA4551075	BUSH, WHEEL STUD SPACER	20
17	GA5008793	FLARE TEE	1
18	GA5001515	M20X1.5PX50 HT BOLT	4
19	GA4415490	PLATE, BRACKET, T PIECE MOUNTING, BRAKE LINES	1
20	GA5001741	WASHER 20mm FLAT SS HD	4
21	GA5003629	WASHER 5mm SPRING SS	1
22	GA5004437	WASHER 6mm FLAT SS	1
GA4951925-08 GOLDACRES	ASSEMBLY DRAWING ONLY. FRONT AXLE, 4X4 ASSY, 3000mm WIDE, G4 S2, MY24		REV 00.E

Front Axle, 4WD, 3mt, Suspension Mounting

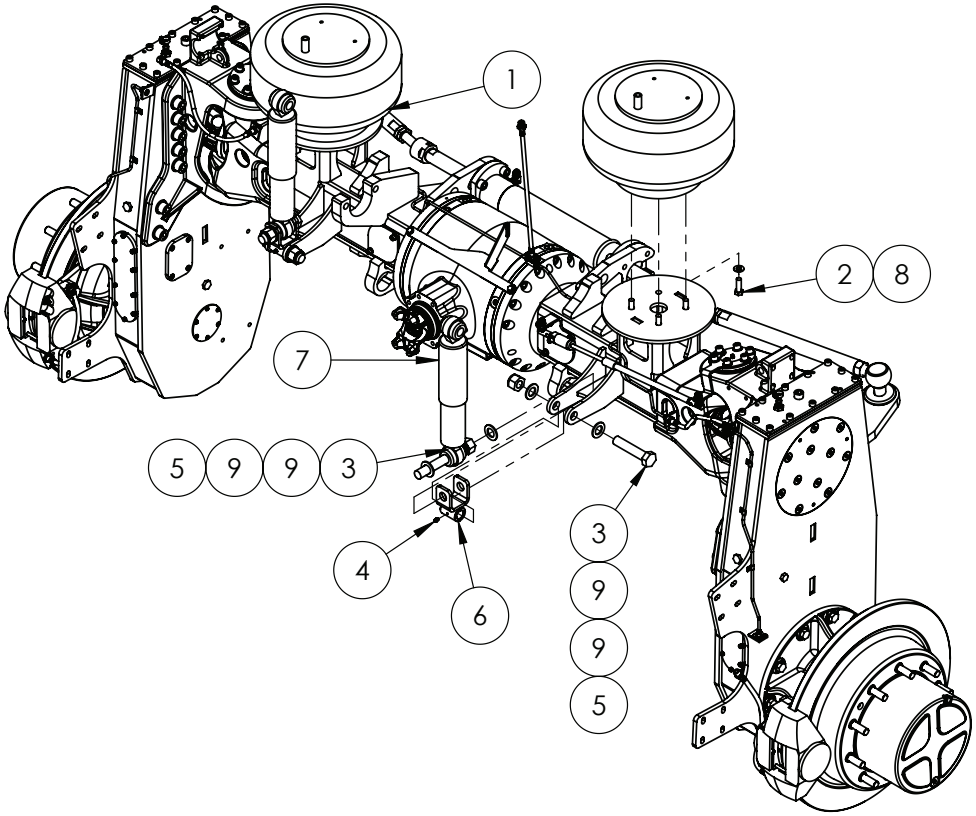

IF DESCRIPTION PREFIX IS ASSEMBLY DRAWING ONLY OR PRODUCTION DRAWING ONLY THE ITEM IS NOT FOR SALE			
ITEM	PART NUMBER	DESCRIPTION	QTY
1	GA5005311	AIR SPRING HT230 SINGLE AIR STUD	2
2	GA5006167	BOLT 1/2 UNC X 1 1/2 GR8 ZP	8
3	GA5011346	BOLT M24 X 115 GR8.8 ZP SPECIAL 75 TO 77mm SHANK	4
4	GA5050450	GREASE NIPPLE, 6mm	2
5	GA5012469	NUT M24 NYLOC ZP	4
6	GA4660670	SHOCK ABSORBER MOUNT, FRONT AXLE, SELF PROPELLED 2015	2
7	GA2500000	SHOCK ABSORBER, DOUBLE EYE, 24mm EYE, 80mm OD, RED	2
8	GA5017673	WASHER 1/2" HIGH TENSILE	8
9	GA5001891	WASHER 24mm FLAT HD SS	8
GA4951925-09 GOLDACRES	ASSEMBLY DRAWING ONLY. FRONT AXLE, 4X4 ASSY, 3000mm WIDE, G4 S2, MY24		REV 00.B

Front Axle, 4WD, 3mt, Linkage Arms

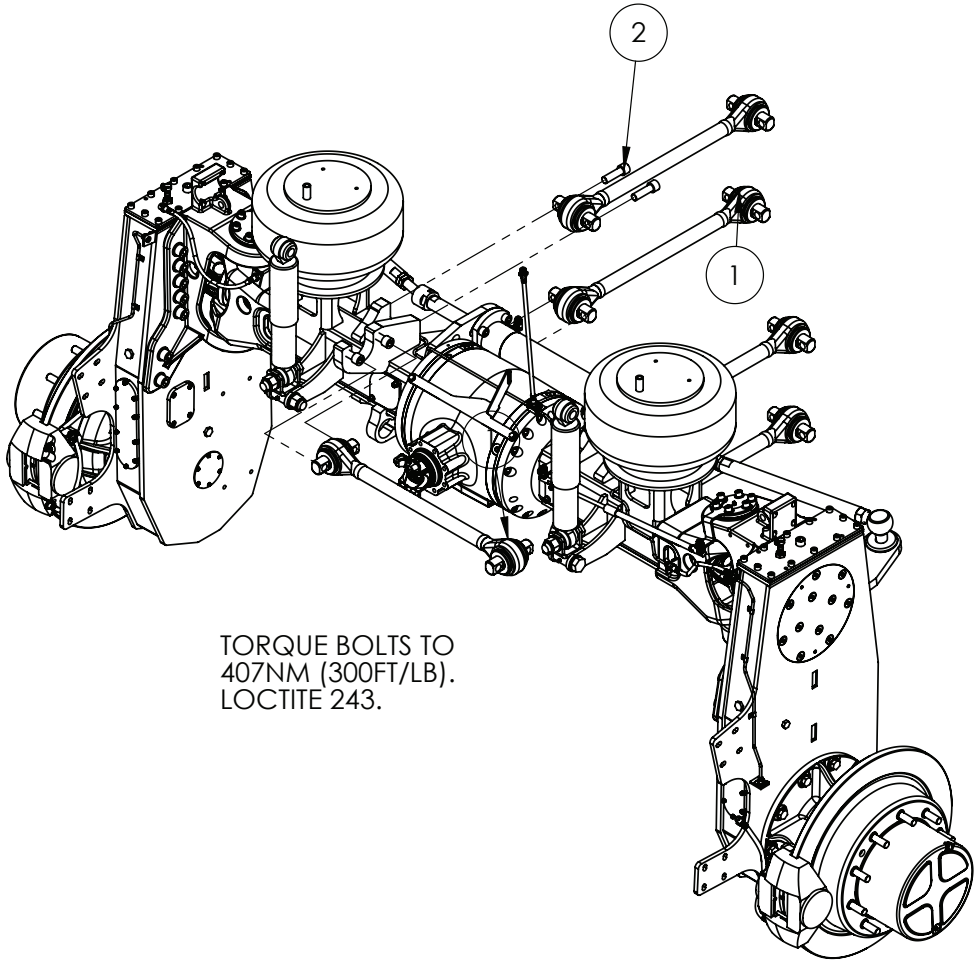

IF DESCRIPTION PREFIX IS ASSEMBLY DRAWING ONLY OR PRODUCTION DRAWING ONLY THE ITEM IS NOT FOR SALE			
ITEM	PART NUMBER	DESCRIPTION	QTY
1	GA5068850	SUSPENSION LINK, TORQUE ROD, 650mm CENTRE, HOLLOW, ATRO	5
2	GA5053145	SHCS 3/4 UNF X 2 1/2 GR12.9 ZP BLUE	10
GA4951925-10 GOLDACRES		ASSEMBLY DRAWING ONLY. FRONT AXLE, 4X4 ASSY, 3000mm WIDE, G4 S2, MY24	REV 00.C

Front Drop Leg, Internal Drive Assembly, 4WD, 3mt, LH

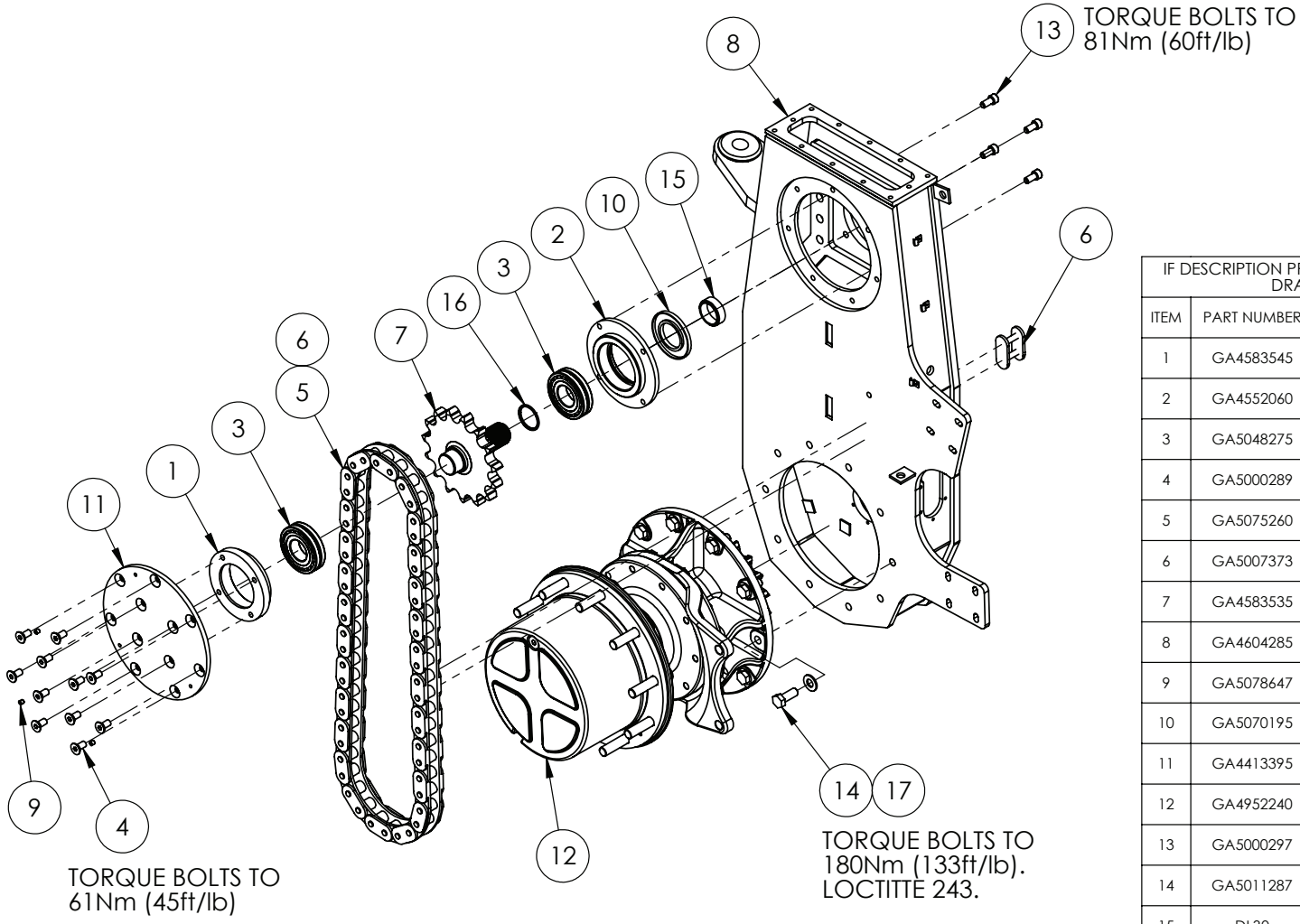

IF DESCRIPTION PREFIX IS ASSEMBLY DRAWING ONLY OR PRODUCTION DRAWING ONLY THE ITEM IS NOT FOR SALE			
ITEM	PART NUMBER	DESCRIPTION	QTY
1	GA4583545	BEARING HOLDER 45mm G3 G4	1
2	GA4552060	BEARING HOLDER - TOP INSIDE 45mm	1
3	GA5048275	BEARING, SPHERICAL ROLLER, SELF ALIGNING, 45 ID X 100 OD X 25 THICK, 21309E	2
4	GA5000289	CSCS M12 X 25 GR12.9 ZP	11
5	GA5075260	CHAIN, 120HT, G3 G4 SERIES, 120HT1N58P, 25 LINKS PLUS JOINER	1
6	GA5007373	CONNECTING LINK, CHAIN JOINING LINK, 120HT, TSUBAKI	1
7	GA4583535	DRIVE SPROCKET AND SHAFT ASSY, DROP LEG, G4 S2	1
8	GA4604285	DROP LEG HOUSING, 4 X 4, LHS, FRONT, G4 S2	1
9	GA5078647	GRUB SCREW, M8X8	3
10	GA5070195	OIL SEAL 100X55X8	1
11	GA4413395	PLATE, SPROCKET COVER, RECESSED, 15 TOOTH SPROCKET, G4 S2	1
12	GA4952240	PRODUCTION DRAWING ONLY. PLANETARY MOUNTING ASSY, G4 S2 MY24	1
13	GA5000297	SHCS M12 X 25 GR12.9 ZP	4
14	GA5011287	SET SCREW M16 X 40 GR 8.8 ZP	10
15	DL30	SPACER RING, SP DROP LEG DIFF OUTPUT SHAFT	1
16	GA4583540	SPACER, DRIVE SPROCKET, G4 S2	1
17	GA5001043	WASHER 16mm FLAT SS HD	10
GA4951915-01 GOLDACRES		PRODUCTION DRAWING ONLY. DROP LEG, 4 X 4 ASSEMLY LHS, FRONT, G4 S2 MY24	REV 00

Front Drop Leg, Internal Drive Assembly, 4WD, 3mt, RH

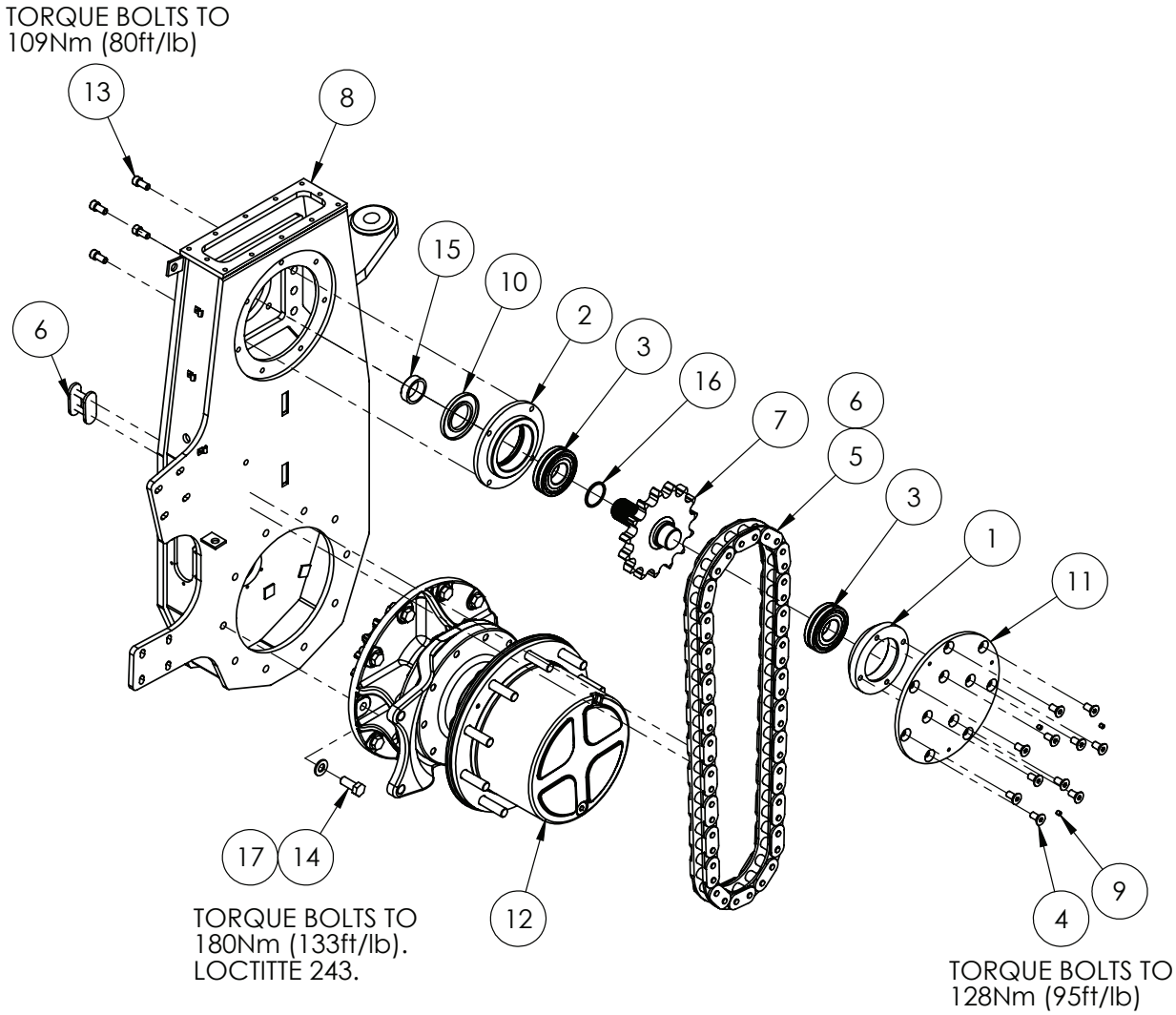

IF DESCRIPTION PREFIX IS ASSEMBLY DRAWING ONLY OR PRODUCTION DRAWING ONLY THE ITEM IS NOT FOR SALE			
ITEM	PART NUMBER	DESCRIPTION	QTY
1	GA4583545	BEARING HOLDER 45mm G3 G4	1
2	GA4552060	BEARING HOLDER - TOP INSIDE 45mm	1
3	GA5048275	BEARING, SPHERICAL ROLLER, SELF ALIGNING, 45 ID X 100 OD X 25 THICK, 21309E	2
4	GA5000289	CSCS M12 X 25 GR12.9 ZP	11
5	GA5075260	CHAIN, 120HT, G3 G4 SERIES, 120HT1N58P, 25 LINKS PLUS JOINER	1
6	GA5007373	CONNECTING LINK, CHAIN JOINING LINK, 120HT, TSUBAKI	1
7	GA4583535	DRIVE SPROCKET AND SHAFT ASSY, DROP LEG, G4 S2	1
8	GA4604270	DROP LEG HOUSING, 4 X 4, RHS, FRONT, G4 S2	1
9	GA5078647	GRUB SCREW, M8X8	3
10	GA5070195	OIL SEAL 100X55X8	1
11	GA4413395	PLATE, SPROCKET COVER, RECESSED, 15 TOOTH SPROCKET, G4 S2	1
12	GA4952240	PRODUCTION DRAWING ONLY. PLANETARY MOUNTING ASSY, G4 S2 MY24	1
13	GA5000297	SHCS M12 X 25 GR12.9 ZP	4
14	GA5011287	SET SCREW M16 X 40 GR 8.8 ZP	10
15	DL30	SPACER RING, SP DROP LEG DIFF OUTPUT SHAFT	1
16	GA4583540	SPACER, DRIVE SPROCKET, G4 S2	1
17	GA5001043	WASHER 16mm FLAT SS HD	10
GA4951920-01 GOLDACRES		PRODUCTION DRAWING ONLY. DROP LEG, 4 X 4 ASSEMLY RHS, FRONT, G4 S2	REV 00

Front Drop Leg, 4WD, 3mt, Cover Plates, LH

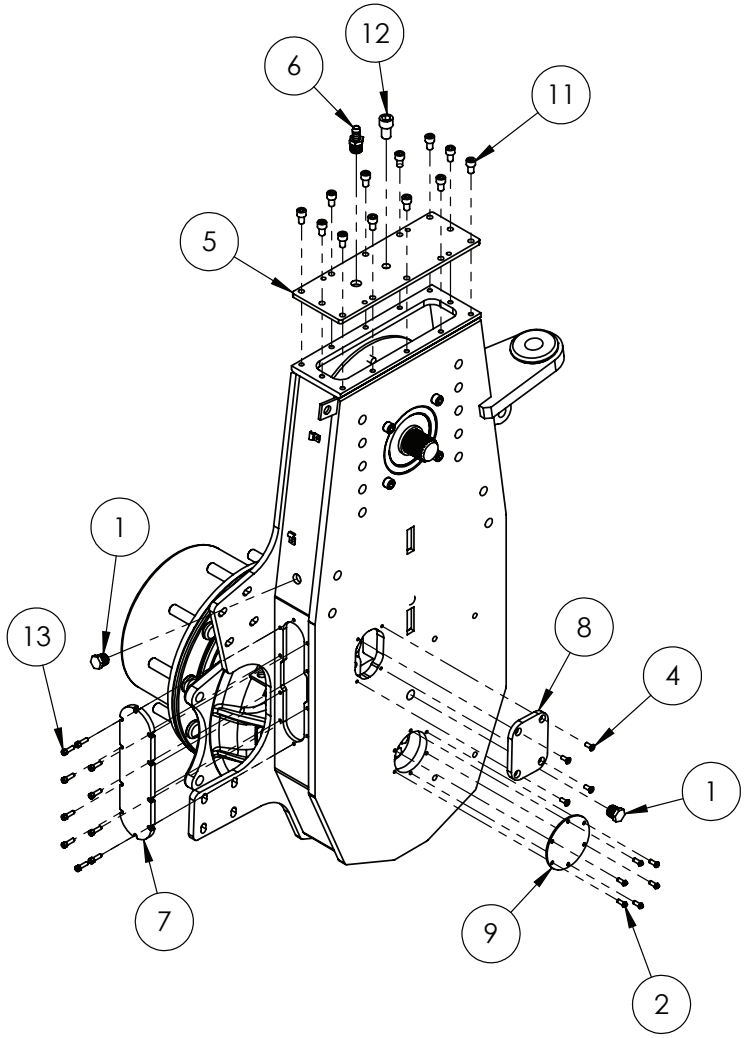

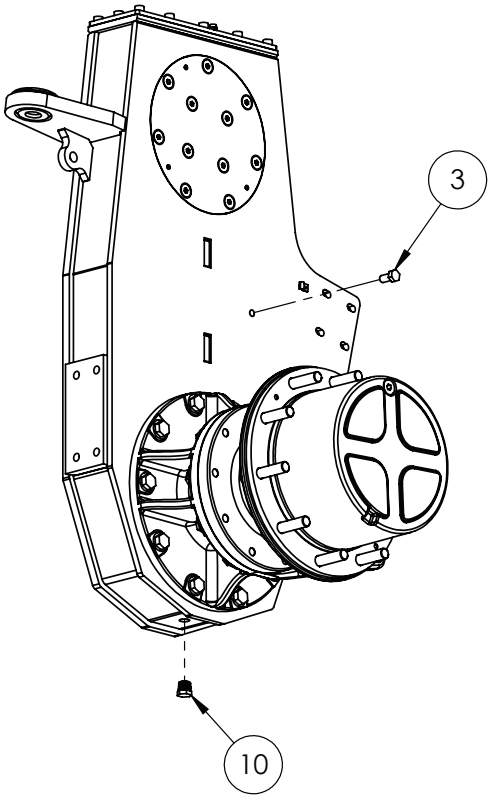

IF DESCRIPTION PREFIX IS ASSEMBLY DRAWING ONLY OR PRODUCTION DRAWING ONLY THE ITEM IS NOT FOR SALE			
ITEM	PART NUMBER	DESCRIPTION	QTY
1	GA5050670	1/2" BRASS PLUG	2
2	GA5004050	BHCS M6 X 16 SS A2-70	6
3	GA5015005	BOLT 0.5 IN UNF X 1.0 IN	1
4	GA5074550	CSCS M6 X 16 - SS	4
5	GA4604275	DROPLEG COVER, TOP, 4WD FRONT DROPLEG, G3 G4	1
6	GA5049350	HOSE BARB, 1/2" BSP MALE X 1/2" HOSE, BRASS	1
7	GA4413450	PLATE, CHAIN ACCESS COVER, G4 S2	1
8	GA4413385	PLATE, CHAIN ACCESS, G4 S2	1
9	GA4509455	PLATE, DROPLEG INSPECTION HOLE, LOWER, G3 G4	1
10	GA5048560	PLUG, MAGNETIC, 1/2" BSPT MALE	1
11	GA5006139	SHCS M10 X 16 GR12.9 ZP	12
12	GA5000905	SHCS M16 X 25 GR12.9 ZP	1
13	GA5004055	SHCS M6 X 20 GR12.9 ZP	10
GA4951915-02 GOLDACRES		PRODUCTION DRAWING ONLY. DROP LEG, 4 X 4 ASSEMLY LHS, FRONT, G4 S2 MY24	REV 00

Front Drop Leg, 4WD, 3mt, Cover Plates, RH Side

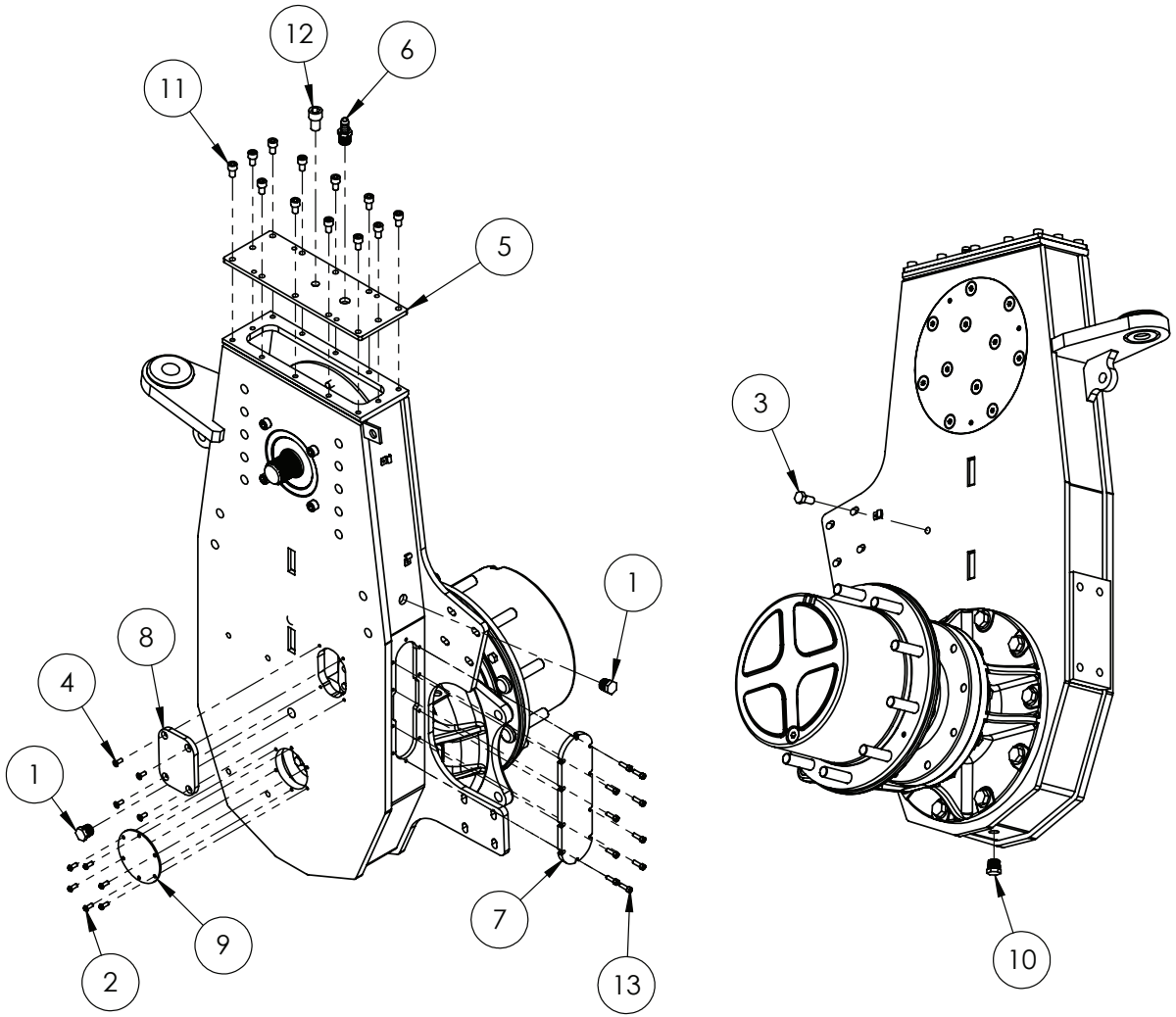

IF DESCRIPTION PREFIX IS ASSEMBLY DRAWING ONLY OR PRODUCTION DRAWING ONLY THE ITEM IS NOT FOR SALE			
ITEM	PART NUMBER	DESCRIPTION	QTY
1	GA5050670	1/2" BRASS PLUG	2
2	GA5004050	BHCS M6 X 16 SS A2-70	6
3	GA5015005	BOLT 0.5 IN UNF X 1.0 IN	1
4	GA5074550	CSCS M6 X 16 - SS	4
5	GA4604275	DROPLEG COVER, TOP, 4WD FRONT DROPLEG, G3 G4	1
6	GA5049350	HOSE BARB, 1/2" BSP MALE X 1/2" HOSE, BRASS	1
7	GA4413450	PLATE, CHAIN ACCESS COVER, G4 S2	1
8	GA4413385	PLATE, CHAIN ACCESS, G4 S2	1
9	GA4509455	PLATE, DROPLEG INSPECTION HOLE, LOWER, G3 G4	1
10	GA5048560	PLUG, MAGNETIC, 1/2" BSPT MALE	1
11	GA5006139	SHCS M10 X 16 GR12.9 ZP	12
12	GA5000905	SHCS M16 X 25 GR12.9 ZP	1
13	GA5004055	SHCS M6 X 20 GR12.9 ZP	10
GA4951920-02 GOLDACRES		PRODUCTION DRAWING ONLY. DROP LEG, 4 X 4 ASSEMLY RHS, FRONT, G4 S2	REV 00

Rear Axle, 2mt

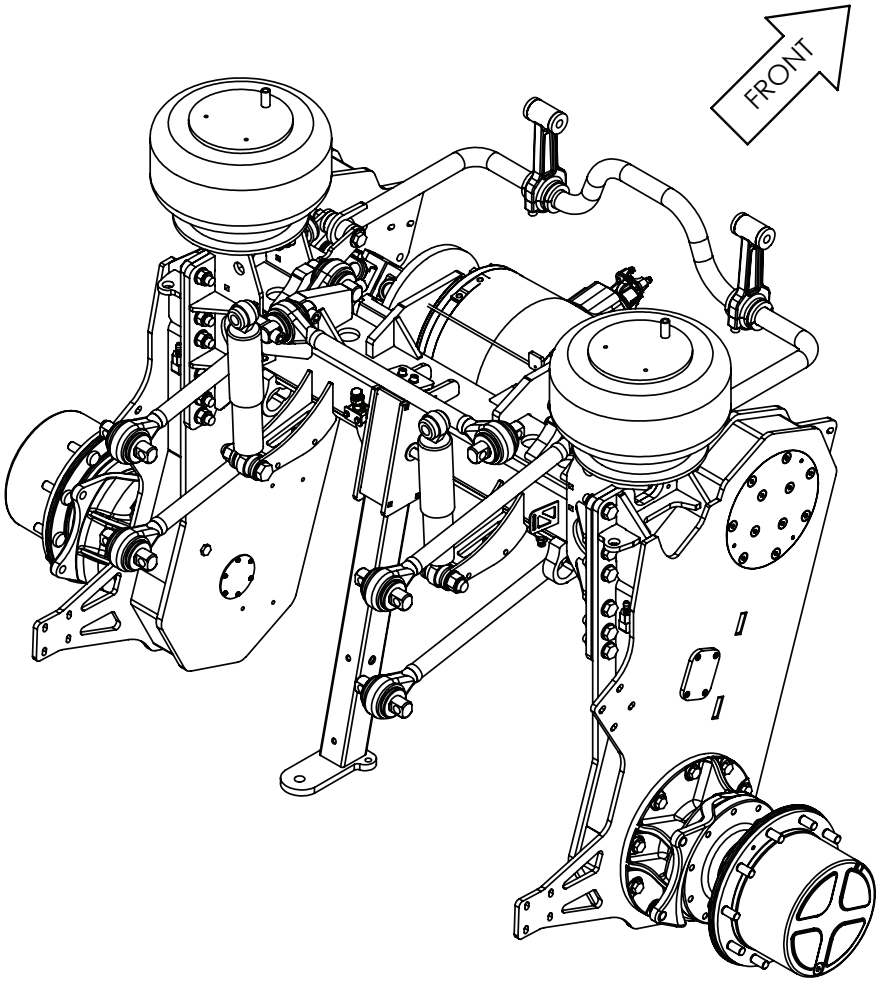

BUILD OPTIONS:
40071 - WHEEL TRACK 2000mm FIXED.
40082 - TOWBAR (ONLY FOR SPRAYERS WITH FIXED AXLE TRACK WIDTH).

GA4951940 GOLDACRES	ASSEMBLY DRAWING ONLY. REAR AXLE ASSY, 2000mm WIDE, G4 S2, MY24	REV 00

Rear Axle, 2mt, Diff Centre Mounting

BOLTS ARE SINGLE USE ONLY ONCE TORQUED.
TORQUE BOLTS TO 244Nm (180ft/lb) LOCTITE 243.

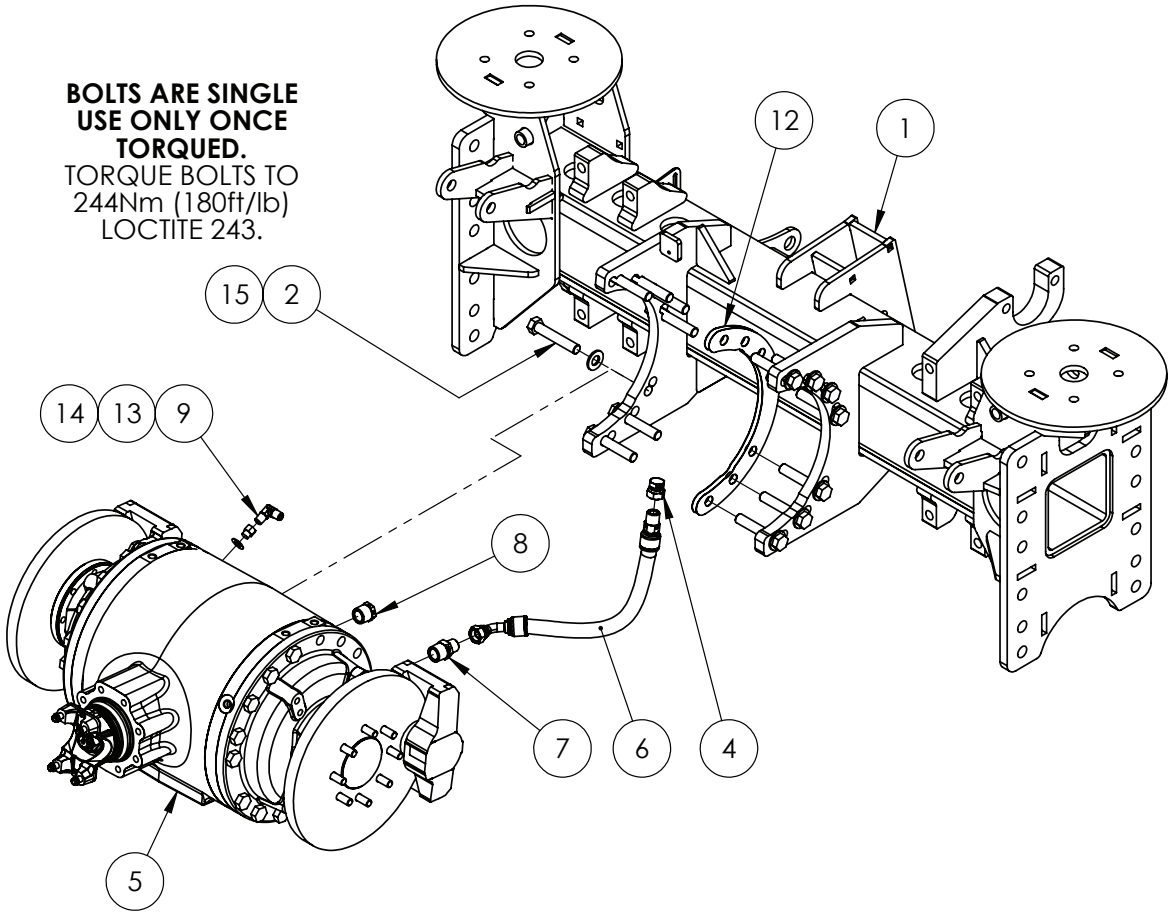

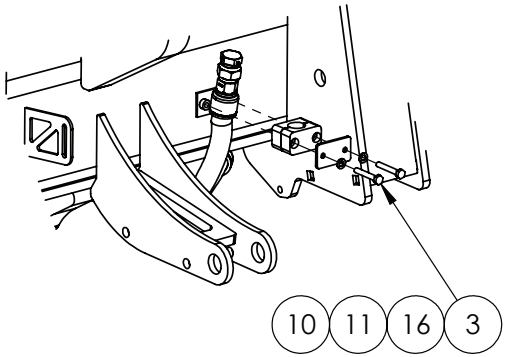

IF DESCRIPTION PREFIX IS ASSEMBLY DRAWING ONLY OR PRODUCTION DRAWING ONLY THE ITEM IS NOT FOR SALE			
ITEM	PART NUMBER	DESCRIPTION	QTY
1	GA4951940-01	ASSEMBLY DRAWING ONLY. REAR AXLE ASSY, 2000mm WIDE, G4 S2, MY24	1
2	GA5011297	BOLT M16 X 90 GR8.8 ZP	14
3	GA5004081	BOLT M6 X 40 GR8.8 ZP	2
4	GA3500278	CAP, SWIVEL, 1/2" BSPP FEMALE, S59-08	1
5	GA5071175	DIFF CENTRE, 3.364:1 RATIO, SOFT ENGAGE DIFF, G3 G4, JCB	1
6	GA3501771	HYDRAULIC HOSE ASSEMBLY, 1/2", 1/2" BSPT 45 TUBE FEMALE, 1/2" BSPT ST MALE	1
7	GA3500226	HYDRAULIC ADAPTOR, NIPPLE, 3/4" BSPT MALE X 1/2" BSPT MALE	1
8	GA3500288	HYDRAULIC ADAPTOR, PLUG, 3/4" BSPT MALE	1
9	GA3500258	HYDRAULIC COUPLING, ELBOW, 90 DEGREE, 1/4" BSPT MALE X 1/4" BSPT MALE, S49-0404	1
10	GA5078065	MOUNTING CLAMP, SINGLE TYPE, JAW, PAIR, GROUP 3, 22mm, RCS-22J	1
11	GA5078072	MOUNTING CLAMP, SINGLE TYPE, PLATE, TOP, GROUP 3, RCS-3PT	1
12	GA4508960	PLATE, SHIM 0.5mm, JCB DIFF CENTRE, G3 G4	2
13	GA2000020	THREAD ADAPTOR MALE M12 X 1.0 TO FEMALE 1/4" BSPT BRASS, DIFF LOCK	1
14	GA5007475	WASHER 12 X 22mm COPPER	1
15	GA5001043	WASHER 16mm FLAT SS HD	14
16	GA5004437	WASHER 6mm FLAT SS	2
GA4951940-02 GOLDACRES		ASSEMBLY DRAWING ONLY. REAR AXLE ASSY, 2000mm WIDE, G4 S2, MY24	REV 00

Rear Axle, 2mt, Drop Leg Mounting

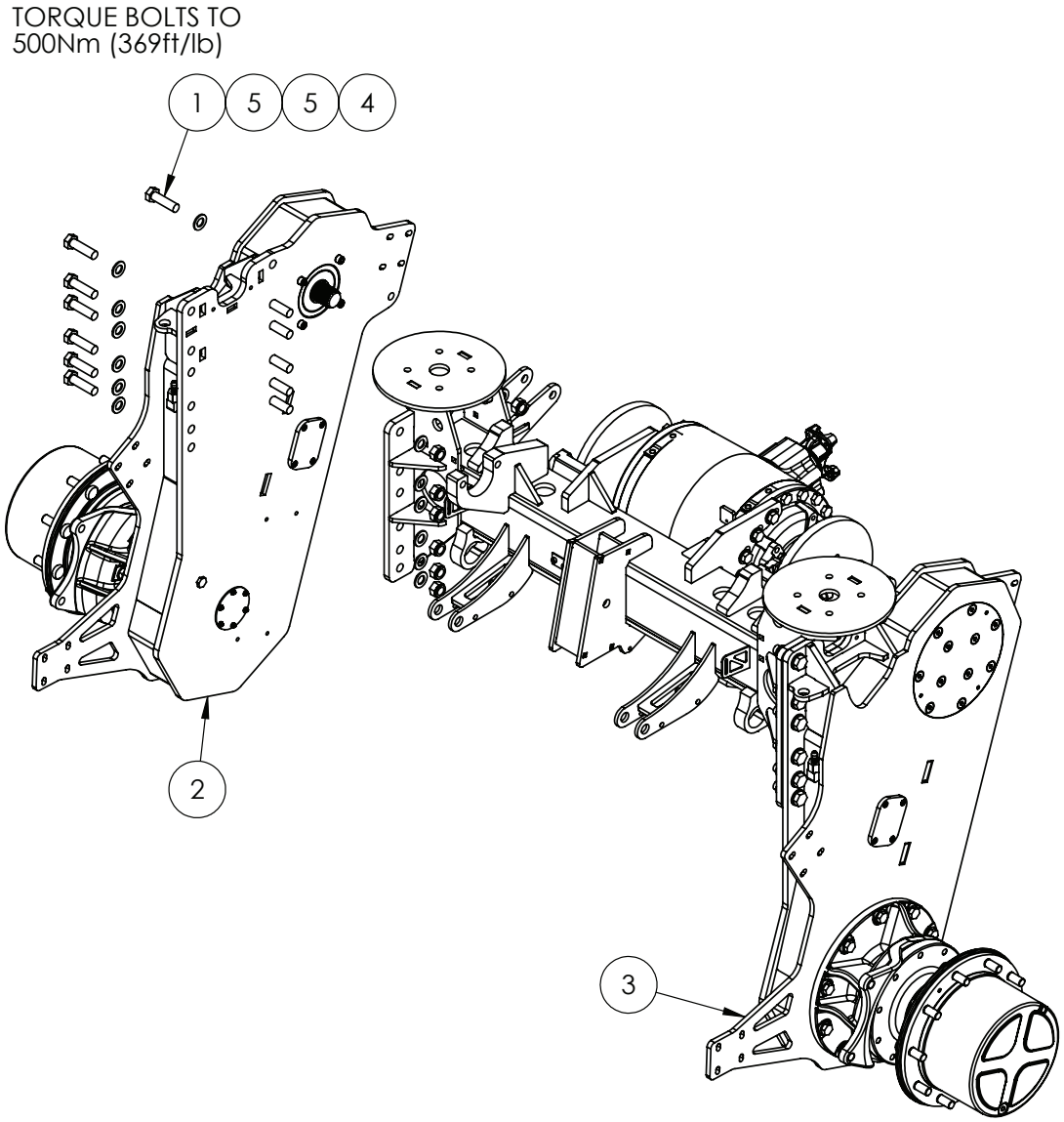

IF DESCRIPTION PREFIX IS ASSEMBLY DRAWING ONLY OR PRODUCTION DRAWING ONLY THE ITEM IS NOT FOR SALE			
ITEM	PART NUMBER	DESCRIPTION	QTY
1	GA0500094	BOLT, M20 X 1.5P X 70, GR 8.8, ZP	14
2	GA4951895	DROP LEG, 2X4 AND 4X4 ASSEMLY LHS, REAR, G4 S2, MY24	1
3	GA4951900	DROP LEG, 2X4 AND 4X4 ASSEMLY RHS, REAR, G4 S2, MY24	1
4	GA5001513	NUT M20 X 1.5P NYLOC ZP	24
5	GA5001741	WASHER 20mm FLAT SS HD	38
GA4951940-03 GOLDACRES		ASSEMBLY DRAWING ONLY. REAR AXLE ASSY, 2000mm WIDE, G4 S2, MY24	REV 00

Rear Axle, 2mt, Breather, Diff Drain & Brake Line Assembly

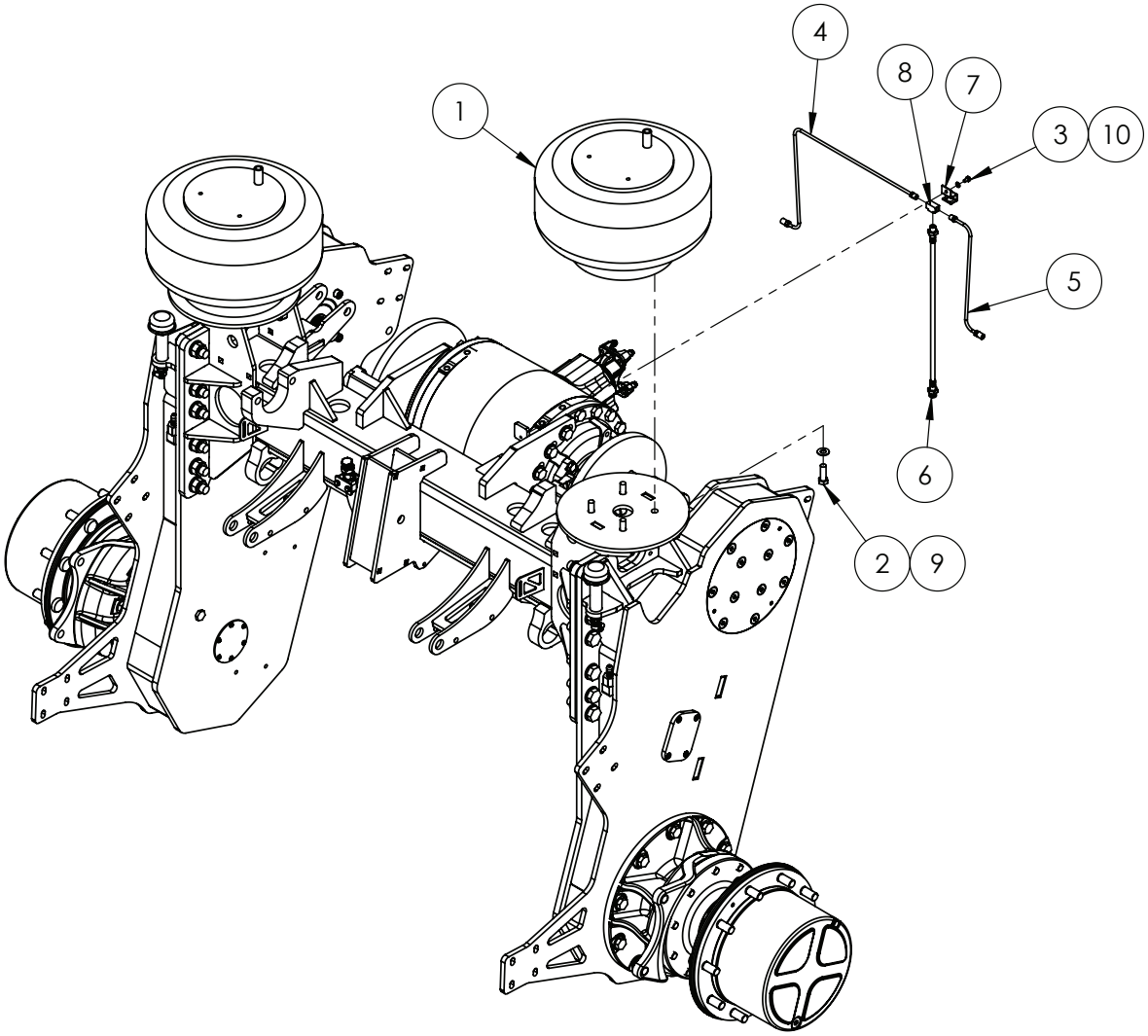

IF DESCRIPTION PREFIX IS ASSEMBLY DRAWING ONLY OR PRODUCTION DRAWING ONLY THE ITEM IS NOT FOR SALE			
ITEM	PART NUMBER	DESCRIPTION	QTY
1	GA5005311	AIR SPRING HT230 SINGLE AIR STUD	2
2	GA5006167	BOLT 1/2 UNC X 1 1/2 GR8 ZP	8
3	GA5004029	BOLT M6 X 10 GR8.8 ZP	1
4	GA4908745	BRAKE LINE, REAR LH, 2m AND 3m, G3 G4, MY18	1
5	GA4908740	BRAKE LINE, REAR RH, 2m AND 3m, G3 G4, MY18	1
6	GA5006303	BRAKE HOSE, CHASSIS TO AXLE, STD AXLE, 470mm LONG	1
7	HYD002LAS	CLAMP BRACKET, HYDRAULIC FITTING	1
8	GA5008793	TEE, FLARE, 7/16" 24 TPI FEMALE THREAD, SUIT 1/4" TUBE	1
9	GA5017673	WASHER 1/2" HIGH TENSILE	8
10	GA5004437	WASHER 6mm FLAT SS	1
GA4951940-04 GOLDACRES		ASSEMBLY DRAWING ONLY. REAR AXLE ASSY, 2000mm WIDE, G4 S2, MY24	REV 01

Rear Axle, 2mt, Shock Absorber & Drive Shaft Mounting

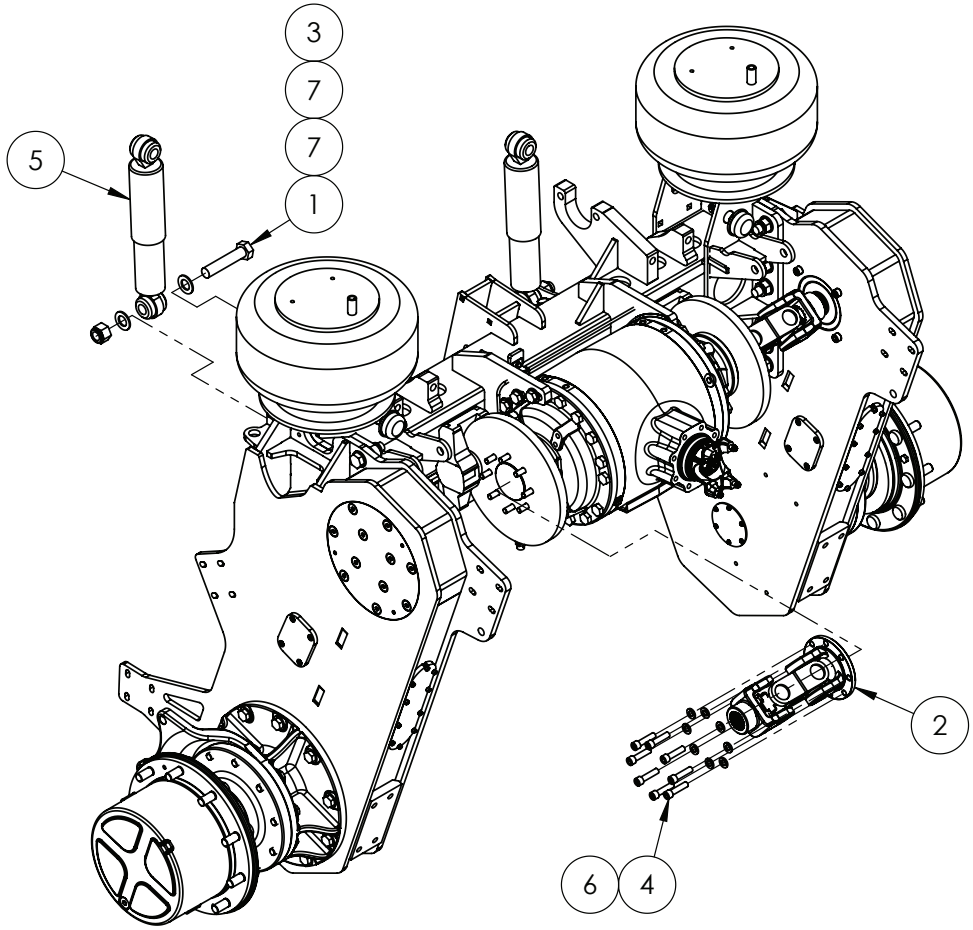

CLEAN BOLTS AND HOLES
WITH LOCTITE 7471.
TORQUE BOLTS TO
128Nm (94.5ft/lb)
APPLY LOCTITE 243.

IF DESCRIPTION PREFIX IS ASSEMBLY DRAWING ONLY OR PRODUCTION DRAWING ONLY THE ITEM IS NOT FOR SALE			
ITEM	PART NUMBER	DESCRIPTION	QTY
1	GA5011346	BOLT M24 X 115 GR8.8 ZP SPECIAL 75 TO 77mm SHANK	2
2	GA5071730	DRIVE SHAFT ASSEMBLY, DOUBLE YOKE, 2M, G SERIES	2
3	GA5012469	NUT M24 NYLOC ZP	2
4	GA5051470	SHCS M12 X 50 GR12.9 ZP	16
5	GA2500000	SHOCK ABSORBER, DOUBLE EYE, 24mm EYE, 80mm OD, RED	2
6	GA5000577	WASHER 12mm FLAT SS HD	16
7	GA5001891	WASHER 24mm FLAT HD SS	4
GA4951940-05 GOLDACRES		ASSEMBLY DRAWING ONLY. REAR AXLE ASSY, 2000mm WIDE, G4 S2, MY24	REV 00.B

Rear Axle, 2mt, Sway Bar, Torque Rod & Tow Bar Mounting

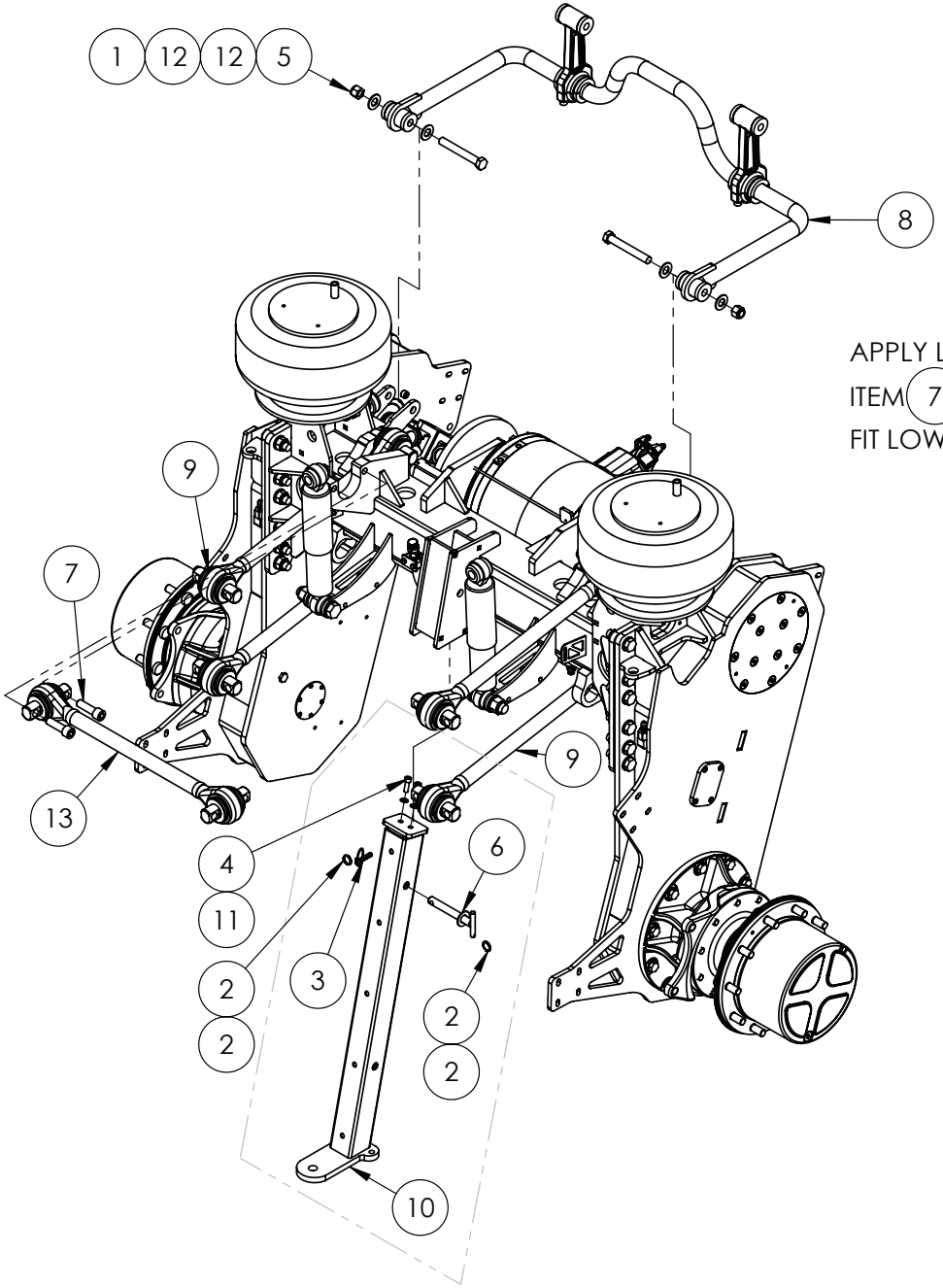

APPLY LOCTITE 7471 AND LOCTITE 243 TO ALL
ITEM 7 BOLTS MOUNTED ON FRONT SIDE ONLY.
FIT LOWER RODS FIRST AND TORQUE TO 407Nm (300ft/lb)

IF DESCRIPTION PREFIX IS ASSEMBLY DRAWING ONLY OR PRODUCTION DRAWING ONLY THE ITEM IS NOT FOR SALE			
ITEM	PART NUMBER	DESCRIPTION	QTY
1	GA5070335	BOLT 3/4 UNC X 5 1/2 GR8 ZP	2
2	GA5002077	KEY RING, 25mm, SS	2
3	GA5010905	LINCH PIN, 7/16" OD X 45 LONG	1
4	GA5006129	M10 X 30 UNBRAKO	2
5	GA5048430	NUT 3/4 UNC NYLOC ZP	2
6	GA4659185	PIN, TOW BAR, SELF PROPELLED	1
7	GA5053145	SHCS 3/4 UNF X 2 1/2 GR12.9 ZP BLUE	10
8	GA2500007	SWAY BAR ASSEMBLY	1
9	GA5068850	SUSPENSION LINK, TORQUE ROD, 650mm CENTRE, HOLLOW, ATRO	4
10	GA4660665	TOW BAR, REAR AXLE, G3 G4, 2015	1
11	GA5000117	WASHER 10mm FLAT SS HD	2
12	GA5001045	WASHER, 3/4" FLAT, HD ZP	4
13	GA5068850	SUSPENSION LINK, TORQUE ROD, 650mm CENTRE, HOLLOW, ATRO	1
14	GA5001491	CHAIN 2mm X 20mm S/S 316	1
GA4951940-06 GOLDACRES		ASSEMBLY DRAWING ONLY. REAR AXLE ASSY, 2000mm WIDE, G4 S2, MY24	REV 00.B

Rear Axle, 2WD & 4WD, 3mt, Fixed

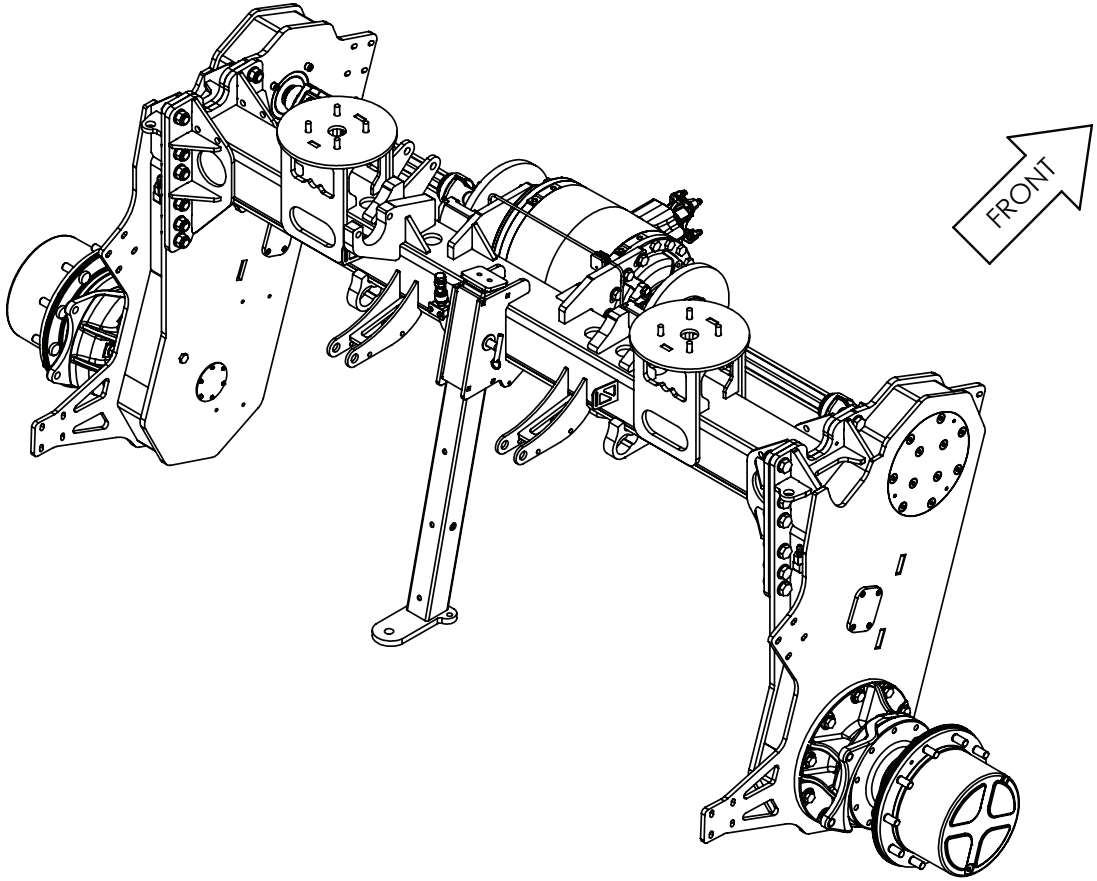

BUILD OPTIONS:
40069 - WHEEL TRACK 3000mm FIXED.
40079 - FOUR WHEEL DRIVE (4WD) WITH FIXED TRACK SETR TO 2970mm.
40082 - TOWBAR (ONLY FOR SPRAYERS WITH FIXED AXLE TRACK WIDTH).

GA4951910 GOLDACRES	ASSEMBLY DRAWING ONLY. REAR AXLE , 2X4 AND 4X4 ASSY, 3000mm WIDE, G4 S2, MY24	REV 00

Rear Axle, 2WD & 4WD, 3mt, Fixed, Diff Centre Mounting

BOLTS ARE SINGLE USE ONLY ONCE TORQUED.

TORQUE BOLTS TO 244Nm (180ft/lb) LOCTITE 243.

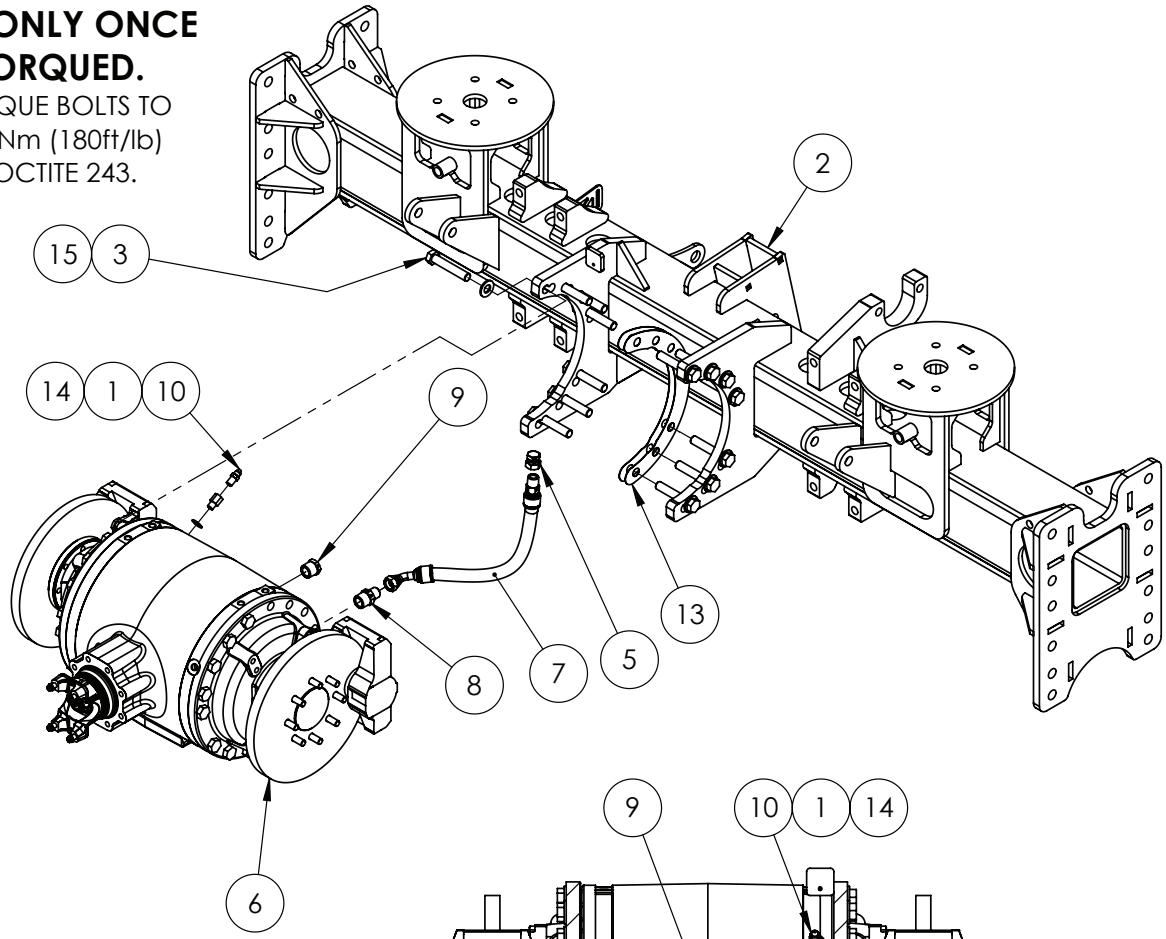

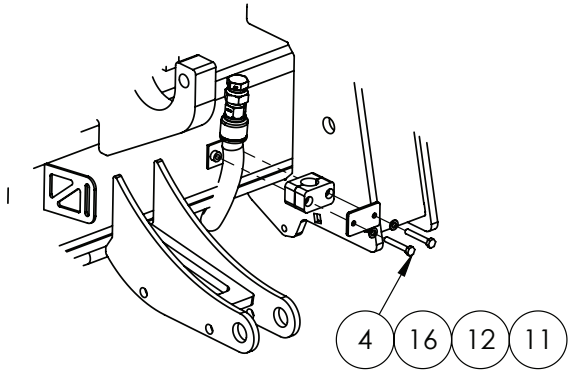

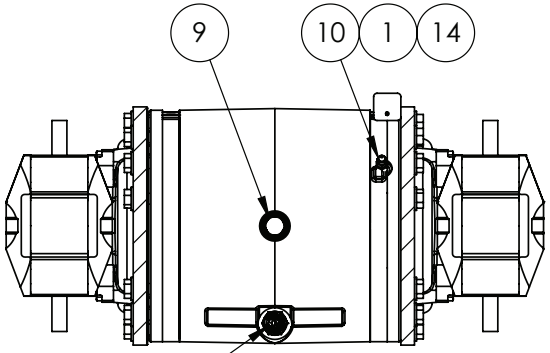

HYDRAULIC FITTINGS LOCATION

IF DESCRIPTION PREFIX IS ASSEMBLY DRAWING ONLY OR PRODUCTION DRAWING ONLY THE ITEM IS NOT FOR SALE			
ITEM	PART NUMBER	DESCRIPTION	QTY
1	GA5025903	ADAPTOR, M12 X 1 MALE TO M12 X 1 DRILL POINT FEMALE, STAINLESS	1
2	GA4951910-01	ASSEMBLY DRAWING ONLY. REAR AXLE , 2X4 AND 4X4 ASSY, 3000mm WIDE, G4 S2, MY24	1
3	GA5011297	BOLT M16 X 90 GR8.8 ZP	14
4	GA5004081	BOLT M6 X 40 GR8.8 ZP	2
5	GA3500278	CAP, SWIVEL, 1/2" BSPP FEMALE, S59-08	1
6	GA5071175	DIFF CENTRE, 3.364:1 RATIO, SOFT ENGAGE DIFF, G3 G4, JCB	1
7	GA3501771	HYDRAULIC HOSE ASSEMBLY, 1/2", 1/2" BSPT 45 TUBE FEMALE, 1/2" BSPT ST MALE	1
8	GA3500226	HYDRAULIC ADAPTOR, NIPPLE, 3/4" BSPT MALE X 1/2" BSPT MALE	1
9	GA3500288	HYDRAULIC ADAPTOR, PLUG, 3/4" BSPT MALE	1
10	GA5025904	JOINER, M12 X 1 MALE TO 7/16 MALE JIC, STAINLESS STEEL	1
11	GA5078065	MOUNTING CLAMP, SINGLE TYPE, JAW, PAIR, GROUP 3, 22mm, RCS-22J	1
12	GA5078072	MOUNTING CLAMP, SINGLE TYPE, PLATE, TOP, GROUP 3, RCS-3PT	1
13	GA4508960	PLATE, SHIM 0.5mm, JCB DIFF CENTRE, G3 G4	2
14	GA5007475	WASHER 12 X 22mm COPPER	1
15	GA5001043	WASHER 16mm FLAT SS HD	14
16	GA5004437	WASHER 6mm FLAT SS	2
GA4951910-02 GOLDACRES		ASSEMBLY DRAWING ONLY. REAR AXLE , 2X4 AND 4X4 ASSY, 3000mm WIDE, G4 S2, MY24	REV 00.B

Rear Axle, 2WD & 4WD, 3mt, Fixed, Diff Drain & Brake Line Assembly

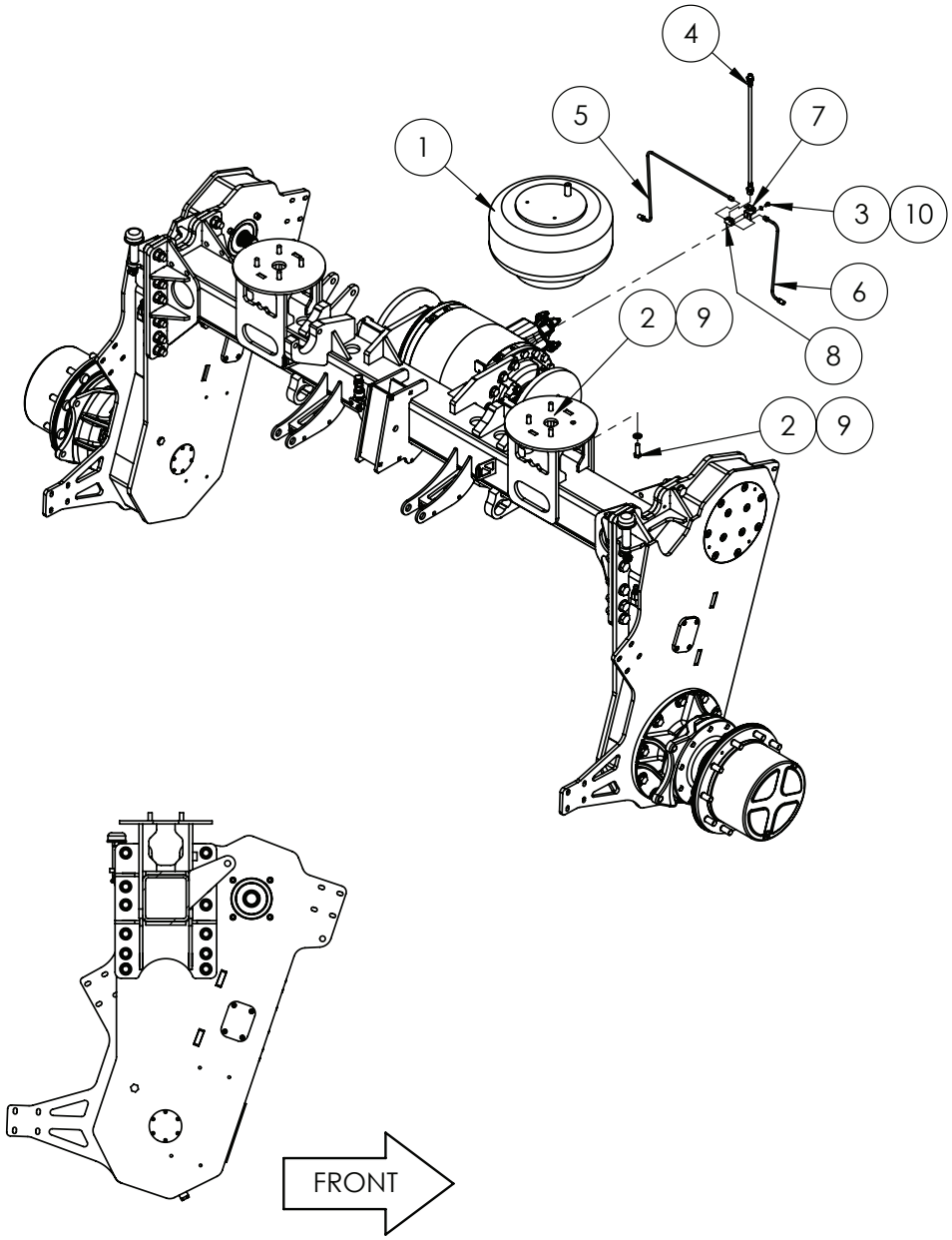

IF DESCRIPTION PREFIX IS ASSEMBLY DRAWING ONLY OR PRODUCTION DRAWING ONLY THE ITEM IS NOT FOR SALE			
ITEM	PART NUMBER	DESCRIPTION	QTY
1	GA5005311	AIR SPRING HT230 SINGLE AIR STUD	2
2	GA5006167	BOLT 1/2 UNC X 1 1/2 GR8 ZP	8
3	GA5004029	BOLT M6 X 10 GR8.8 ZP	1
4	GA5025923	BRAIDED BRAKE HOSE, CHASSIS TO AXLE, STD AXLE, 470mm LONG, DOT 4	1
5	GA4908745	BRAKE LINE, REAR LH, 2m AND 3m, G3 G4, MY18	1
6	GA4908740	BRAKE LINE, REAR RH, 2m AND 3m, G3 G4, MY18	1
7	HYD002LAS	CLAMP BRACKET, HYDRAULIC FITTING	1
8	GA5008793	TEE, FLARE, 7/16" 24 TPI FEMALE THREAD, SUIT 1/4" TUBE	1
9	GA5017673	WASHER 1/2" HIGH TENSILE	8
10	GA5004437	WASHER 6mm FLAT SS	1
GA4951910-04 GOLDACRES	ASSEMBLY DRAWING ONLY. REAR AXLE , 2X4 AND 4X4 ASSY, 3000mm WIDE, G4 S2, MY24		REV 01

Rear Axle, 2WD & 4WD, 3mt, Fixed, Drive Shaft & Shocker Mounting

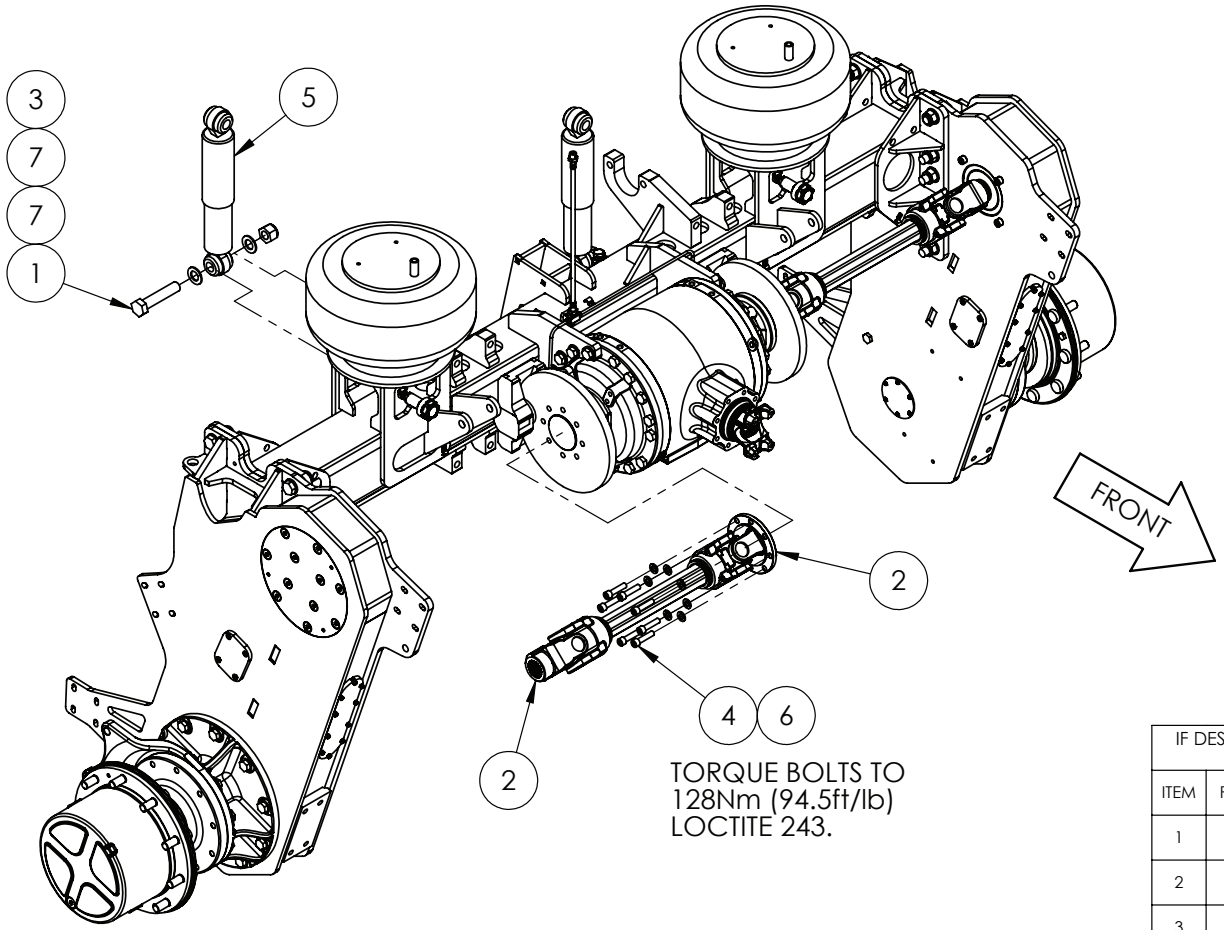

IF DESCRIPTION PREFIX IS ASSEMBLY DRAWING ONLY OR PRODUCTION DRAWING ONLY THE ITEM IS NOT FOR SALE			
ITEM	PART NUMBER	DESCRIPTION	QTY
1	GA5011346	BOLT M24 X 115 GR8.8 ZP SPECIAL 75 TO 77mm SHANK	2
2	GA5071740	DRIVE SHAFT ASSEMBLY, DOUBLE YOKE, 3M, G3 G4 SERIES	2
3	GA5012469	NUT M24 NYLOC ZP	2
4	GA5051470	SHCS M12 X 50 GR12.9 ZP	16
5	GA2500000	SHOCK ABSORBER, DOUBLE EYE, 24mm EYE, 80mm OD, RED	2
6	GA5000577	WASHER 12mm FLAT SS HD	16
7	GA5001891	WASHER 24mm FLAT HD SS	4
GA4951910-05 GOLDACRES		ASSEMBLY DRAWING ONLY. REAR AXLE , 2X4 AND 4X4 ASSY, 3000mm WIDE, G4 S2, MY24	REV 00

Rear Axle, 2WD & 4WD, 3mt, Fixed, Sway Bar, Torque Rod & Towbar

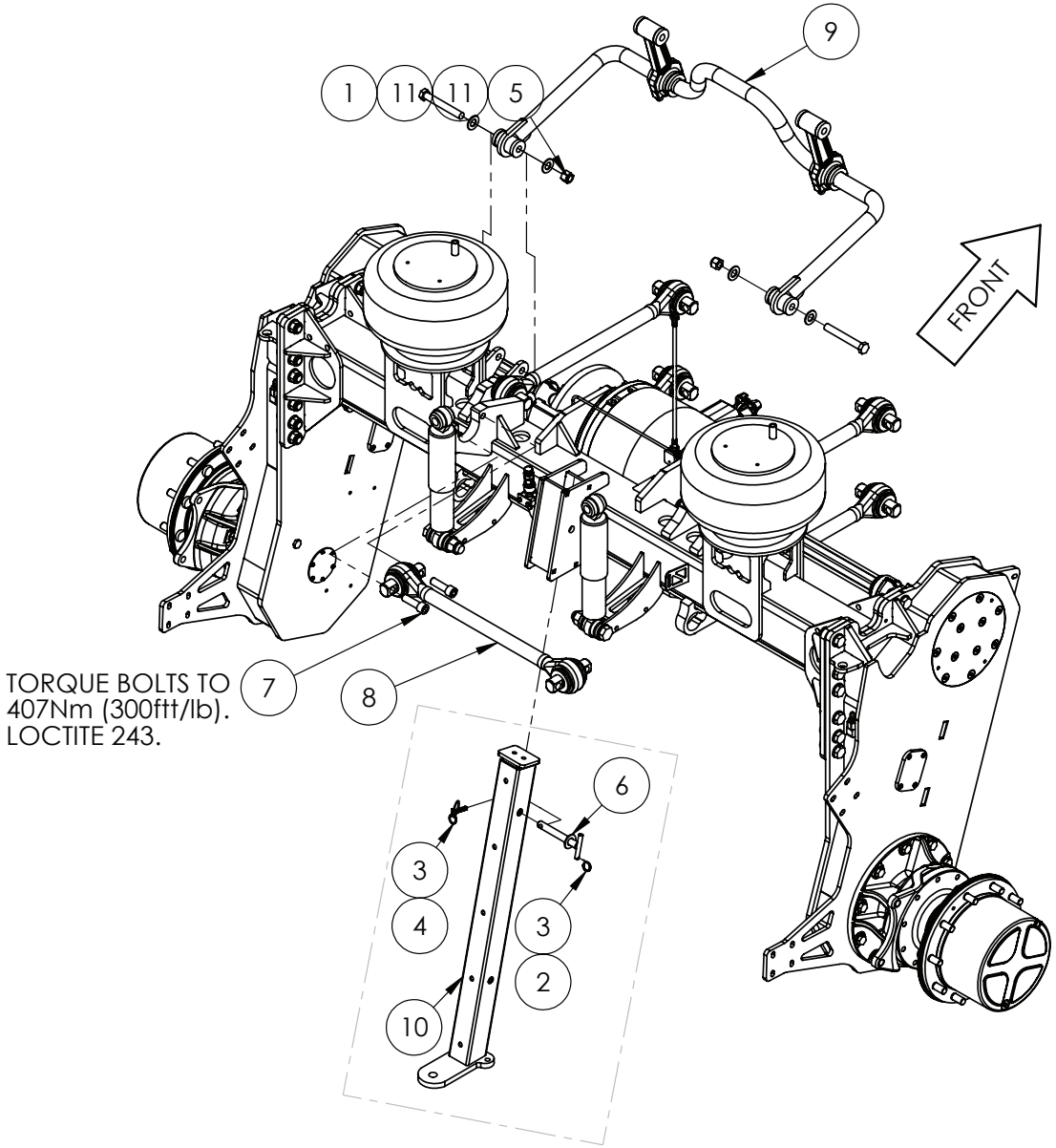

IF DESCRIPTION PREFIX IS ASSEMBLY DRAWING ONLY OR PRODUCTION DRAWING ONLY THE ITEM IS NOT FOR SALE			
ITEM	PART NUMBER	DESCRIPTION	QTY
1	GA5070335	BOLT 3/4 UNC X 5 1/2 GR8 ZP	2
2	GA5001491	CHAIN 2 X 20 mm SS 316, 146102	1
3	GA5002077	KEY RING, 25mm, SS	2
4	GA5010905	LINCH PIN, 7/16" OD X 45 LONG	1
5	GA5048430	NUT 3/4 UNC NYLOC ZP	2
6	GA4659185	PIN, TOW BAR, SELF PROPELLED	1
7	GA5053145	SHCS 3/4 UNF X 2 1/2 GR12.9 ZP BLUE	10
8	GA5068850	SUSPENSION LINK, TORQUE ROD, 650mm CENTRE, HOLLOW, ATRO	5
9	GA2500007	SWAY BAR ASSEMBLY	1
10	GA4660665	TOW BAR, REAR AXLE, G3 G4, 2015	1
11	GA5001045	WASHER, 3/4" FLAT, HD ZP	4
GA4951910-06 GOLDACRES		ASSEMBLY DRAWING ONLY. REAR AXLE , 2X4 AND 4X4 ASSY, 3000mm WIDE, G4 S2, MY24	REV 00

Rear Axle, 2WD & 4WD, 3mt, Fixed, Linkage Arms

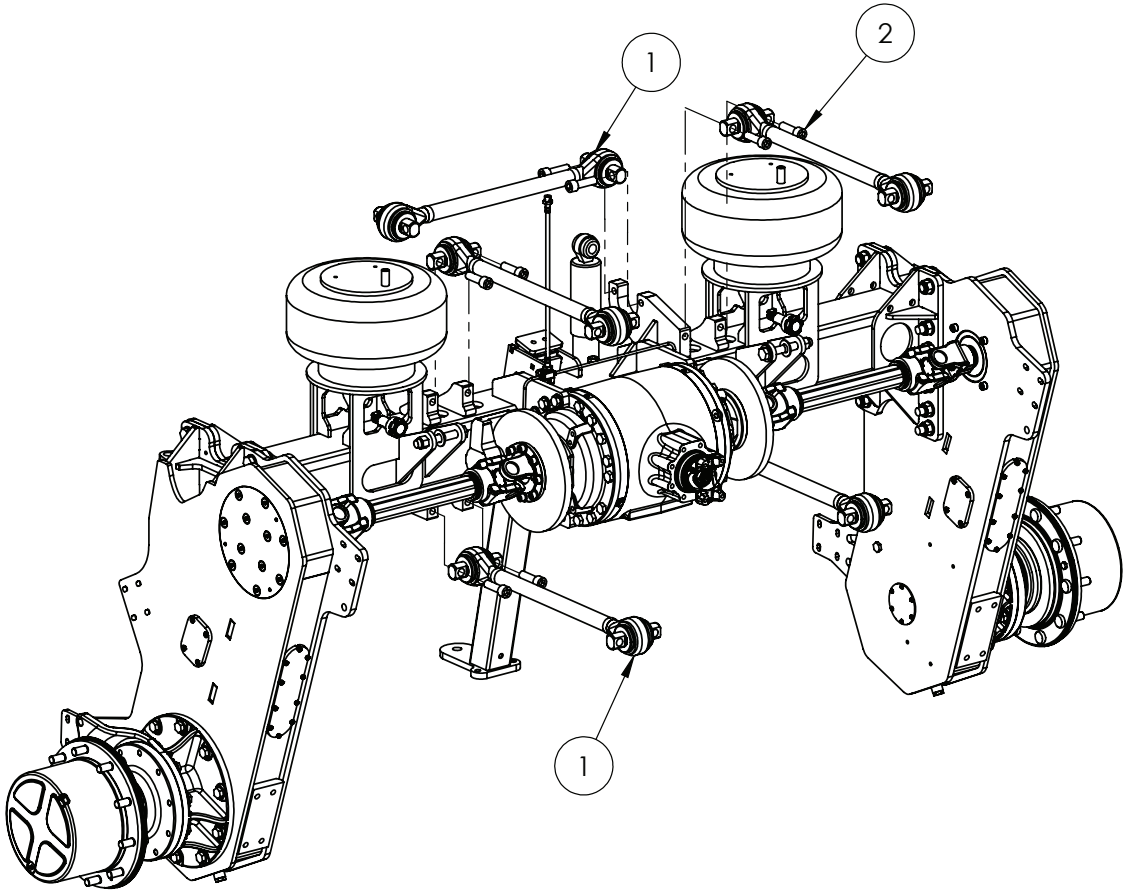

IF DESCRIPTION PREFIX IS ASSEMBLY DRAWING ONLY OR PRODUCTION DRAWING ONLY THE ITEM IS NOT FOR SALE			
ITEM	PART NUMBER	DESCRIPTION	QTY
1	GA5068850	SUSPENSION LINK, TORQUE ROD, 650mm CENTRE, HOLLOW, ATRO	5
2	GA5053145	SHCS 3/4 UNF X 2 1/2 GR12.9 ZP BLUE	10
GA4951910-06 GOLDACRES		ASSEMBLY DRAWING ONLY. REAR AXLE , 2X4 AND 4X4 ASSY, 3000mm WIDE, G4 S2, MY24	REV 00

Rear Axle, 2WD & 4WD, 3mt, Fixed, Drop Leg Mounting

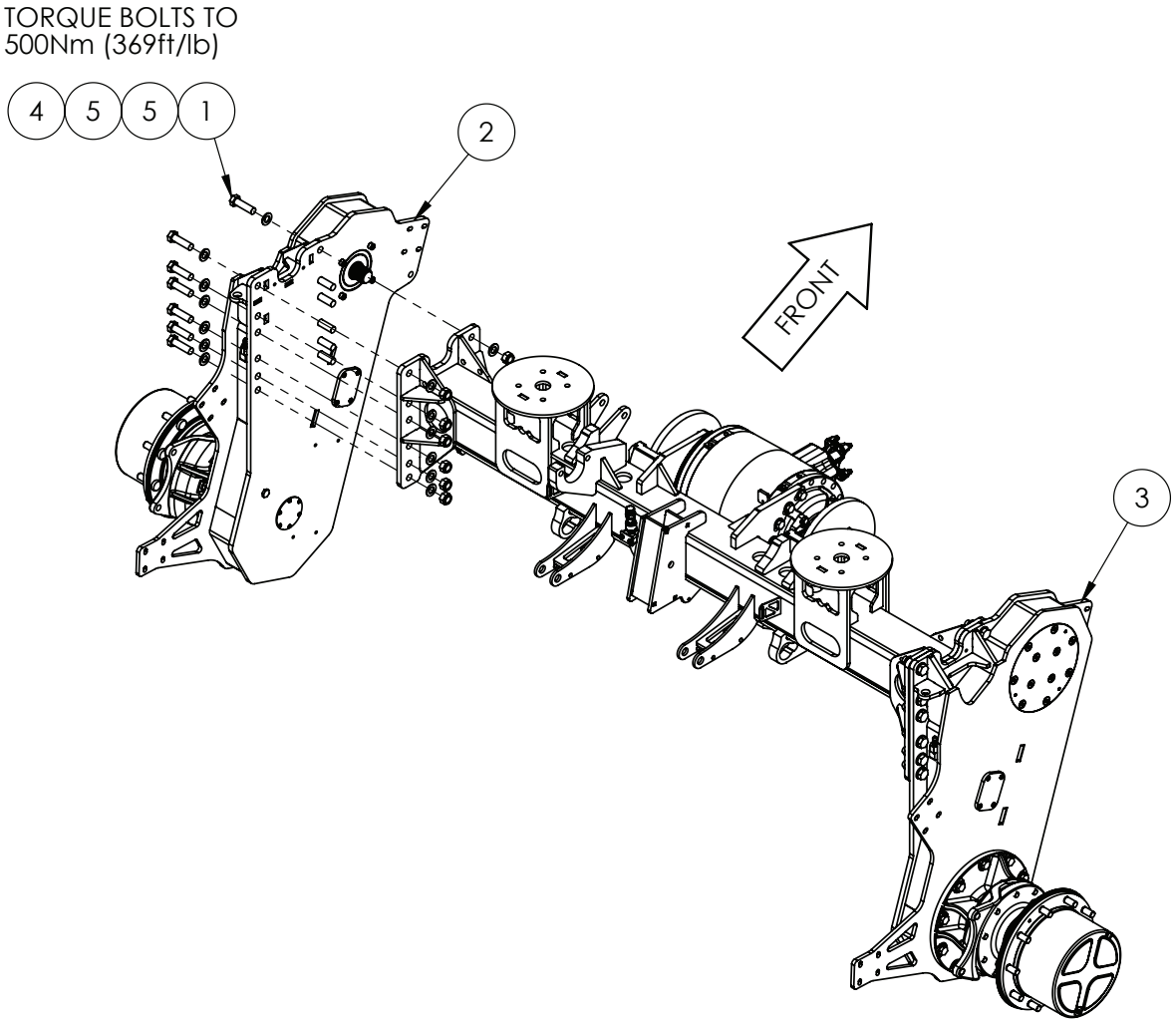

IF DESCRIPTION PREFIX IS ASSEMBLY DRAWING ONLY OR PRODUCTION DRAWING ONLY THE ITEM IS NOT FOR SALE			
ITEM	PART NUMBER	DESCRIPTION	QTY
1	GA0500094	BOLT, M20 X 1.5P X 70, GR 8.8, ZP	14
2	GA4951895	DROP LEG, 2X4 AND 4X4 ASSEMLY LHS, REAR, G4 S2, MY24	1
3	GA4951900	DROP LEG, 2X4 AND 4X4 ASSEMLY RHS, REAR, G4 S2, MY24	1
4	GA5001513	NUT M20 X 1.5P NYLOC ZP	24
5	GA5001741	WASHER 20mm FLAT SS HD	38
GA4951910-03 GOLDACRES		ASSEMBLY DRAWING ONLY. REAR AXLE , 2X4 AND 4X4 ASSY, 3000mm WIDE, G4 S2, MY24	REV 00.B

Rear Axle, Adjustable, 2-3mt

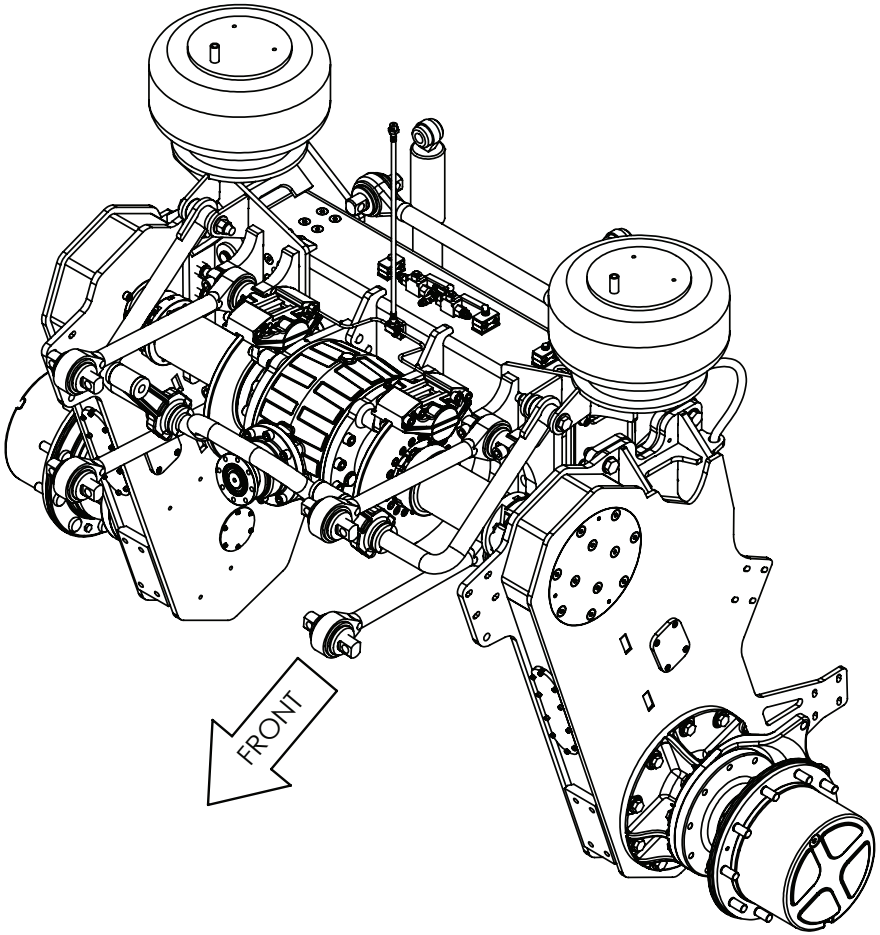

BUILD OPTIONS:
40077 - HYDRAULIC ADJUST WHEEL TRACK 2000-3000mm 2WD (BASED ON 380 WIDE TYRES ONLY)

GA4952260 GOLDACRES	ASSEMBLY DRAWING ONLY. REAR AXLE ADJUSTABLE, 2000-3000mm WIDE, G4 S2 MY24	REV 00

Rear Axle, Adjustable Inner, 2-3mt, Shims & Slider Plates

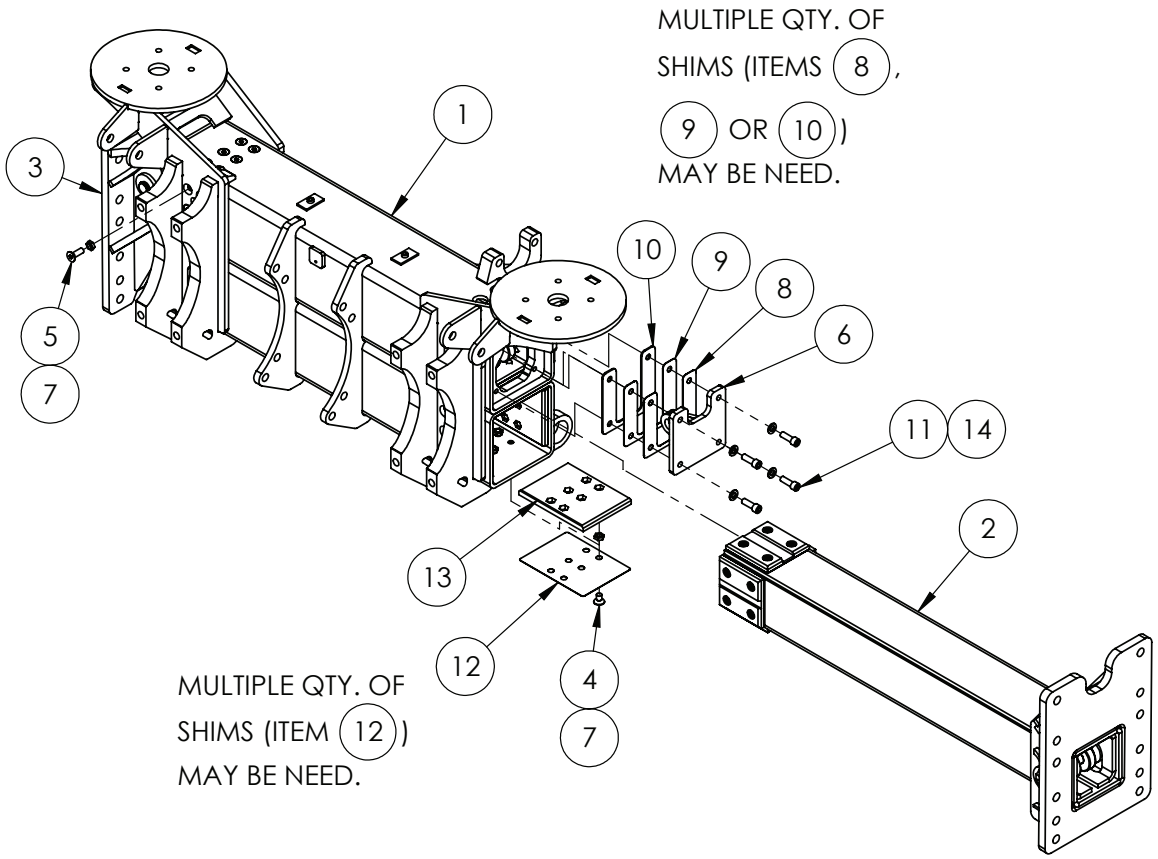

IF DESCRIPTION PREFIX IS ASSEMBLY DRAWING ONLY OR PRODUCTION DRAWING ONLY THE ITEM IS NOT FOR SALE			
ITEM	PART NUMBER	DESCRIPTION	QTY
1	GA4952260-01	ASSEMBLY DRAWING ONLY. REAR AXLE ASSY, 2000-3000mm WIDE, G4 S2 MY24	1
2	GA4952260-05	ASSEMBLY DRAWING ONLY. REAR AXLE ADJUSTABLE, 2000-3000mm WIDE, G4 S2 MY24	1
3	GA4952260-04	ASSEMBLY DRAWING ONLY. REAR AXLE ADJUSTABLE, 2000-3000mm WIDE, G4 S2 MY24	1
4	GA5070860	CSCS M12 X 20 GR12.9 ZP	42
5	GA5069080	CSCS M12 X 35 GR12.9 ZP	6
6	GA4604620	HYDRAULIC RAM MOUNT, EXTENDABLE AXLE, G4 S2	2
7	GA5071280	M12 PLAIN NUT HALF	48
8	GA4415255	PLATE, SHIM, 0.5mm, HYDRAULIC RAM END, EXTENDABLE AXLES, G4 S2	2
9	GA4415095	PLATE, SHIM, 1mm, HYDRAULIC RAM END, EXTENDABLE AXLES, G4 S2	2
10	GA4415260	PLATE, SHIM, 3mm, HYDRAULIC RAM END, EXTENDABLE AXLES, G4 S2	2
11	GA5000313	SHCS M12 X 35 GR12.9 ZP	8
12	GA4537840	SHIM OUTER ADJUSTABLE AXLE	8
13	GA4583390	SLIDER ADJUSTABLE AXLE OUTER	8
14	GA5000577	WASHER 12mm FLAT SS HD	8
GA4952260-06 GOLDACRES		ASSEMBLY DRAWING ONLY. REAR AXLE ADJUSTABLE, 2000-3000mm WIDE, G4 S2 MY24	REV 00

Rear Extendable Axle Inner, 2-3mt, RH Side

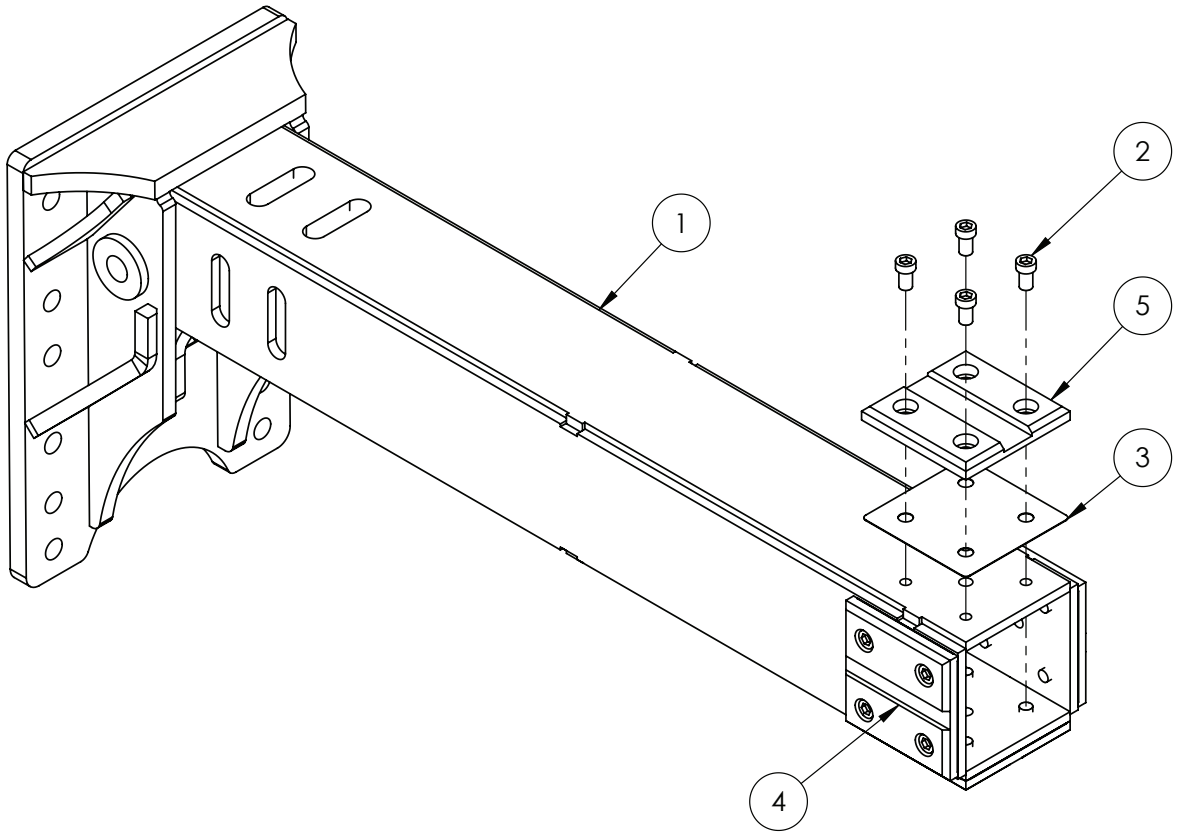

RIGHT HAND SIDE

MULTIPLE QTY. OF SHIMS (ITEM 3) MAY BE NEED.

IF DESCRIPTION PREFIX IS ASSEMBLY DRAWING ONLY OR PRODUCTION DRAWING ONLY THE ITEM IS NOT FOR SALE			
ITEM	PART NUMBER	DESCRIPTION	QTY
1	GA4605000	EXTENDABLE AXLE, INNER, RHS, G4 S2	1
2	GA0500015	SHCS, M12 X 20, LOW HEAD, BLACK	16
3	GA4537835	SHIM INNER ADJUSTABLE AXLE	4
4	GA4583385	WEAR PAD, ADJUSTABLE AXLE SLIDER, INNER, CAST NYLON GREEN	3
5	GA4583495	WEAR PAD, ADJUSTABLE AXLE SLIDER, INNER, CAST NYLON GREEN, 35mm SLOT	1
GA4952260-02 GOLDACRES		ASSEMBLY DRAWING ONLY. REAR AXLE ADJUSTABLE, 2000-3000mm WIDE, G4 S2 MY24	REV 00.B

Rear Extendable Axle Inner, 2-3mt, LH Side

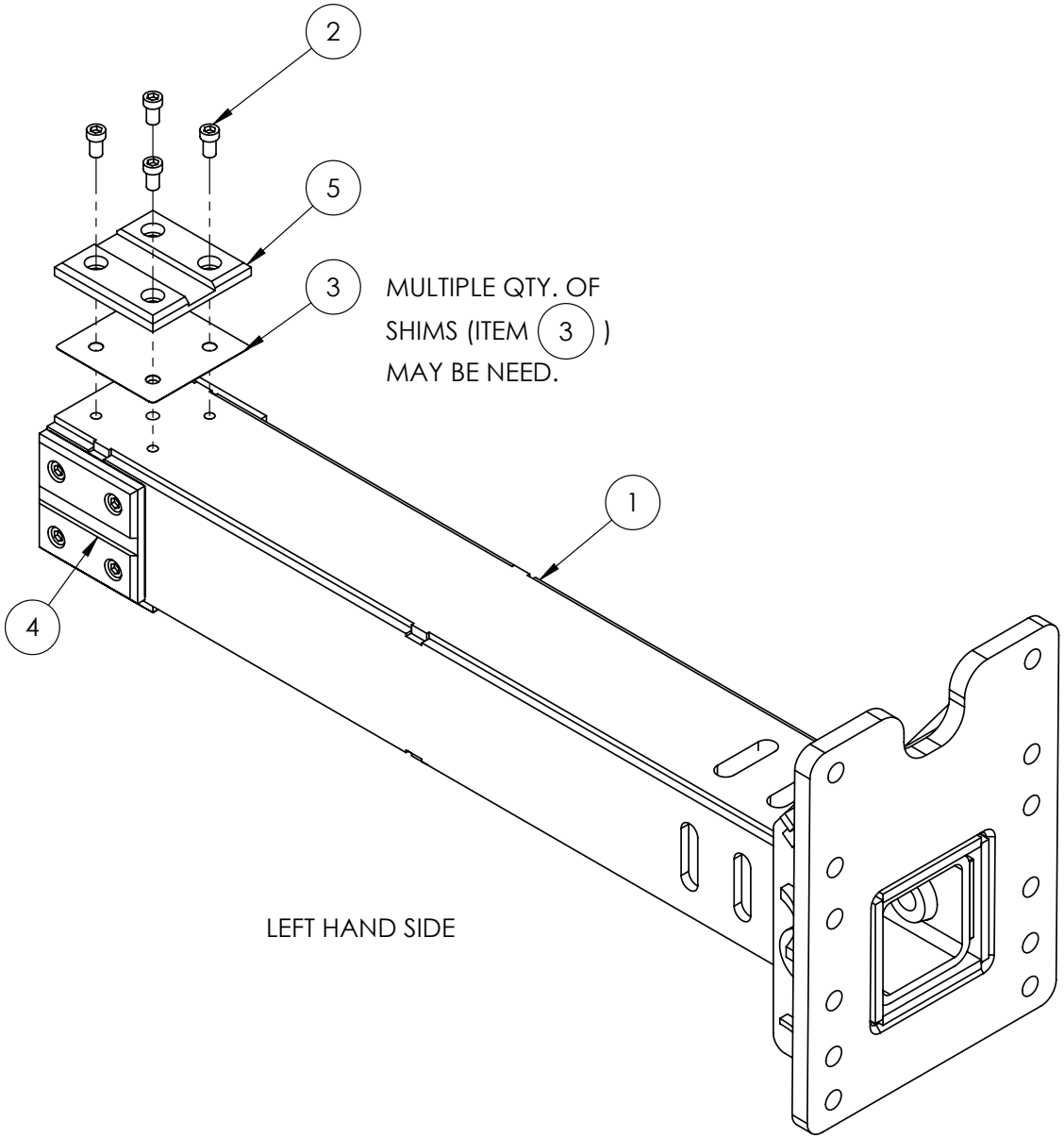

IF DESCRIPTION PREFIX IS ASSEMBLY DRAWING ONLY OR PRODUCTION DRAWING ONLY THE ITEM IS NOT FOR SALE			
ITEM	PART NUMBER	DESCRIPTION	QTY
1	GA4605034	EXTENDABLE AXLE, INNER, LHS, G4 S2	1
2	GA0500015	SHCS, M12 X 20, LOW HEAD, BLACK	16
3	GA4537835	SHIM INNER ADJUSTABLE AXLE	4
4	GA4583385	WEAR PAD, ADJUSTABLE AXLE SLIDER, INNER, CAST NYLON GREEN	3
5	GA4583495	WEAR PAD, ADJUSTABLE AXLE SLIDER, INNER, CAST NYLON GREEN, 35mm SLOT	1
GA4952260-03 GOLDACRES		ASSEMBLY DRAWING ONLY. REAR AXLE ADJUSTABLE, 2000-3000mm WIDE, G4 S2 MY24	REV 00.F

Rear Extendable Axle Inner, Hydraulic Cylinder Mounting, 2-3mt, RH Side

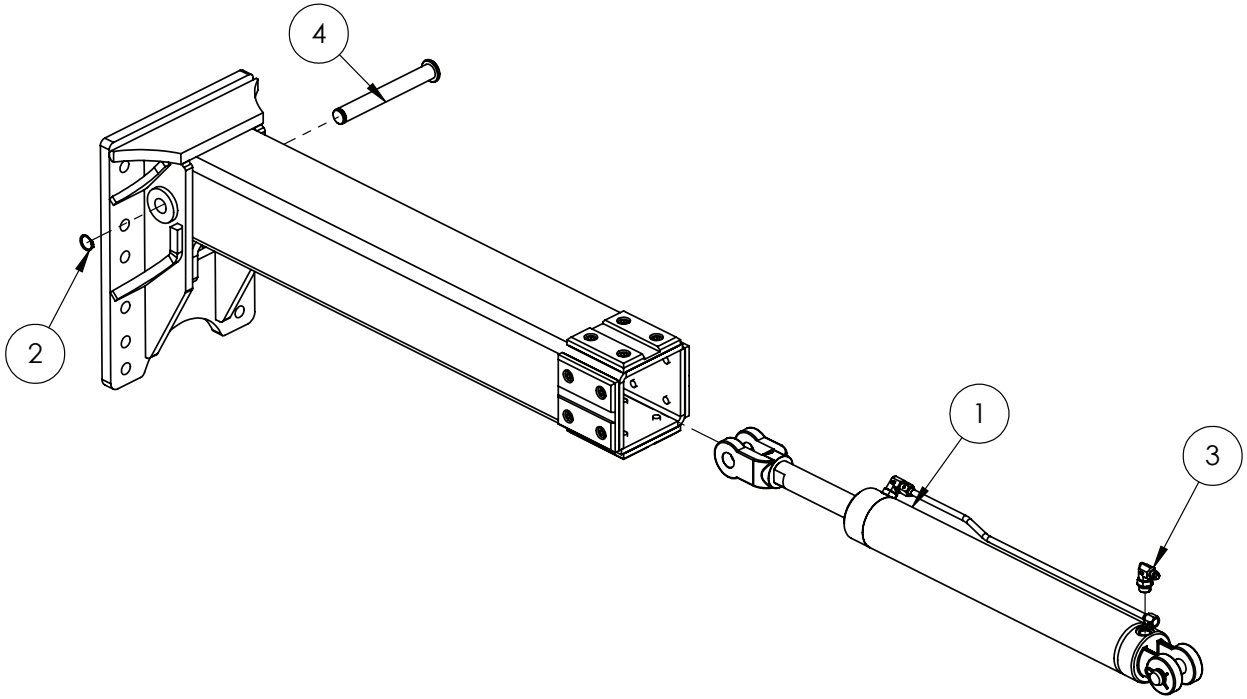

IF DESCRIPTION PREFIX IS ASSEMBLY DRAWING ONLY OR PRODUCTION DRAWING ONLY THE ITEM IS NOT FOR SALE			
ITEM	PART NUMBER	DESCRIPTION	QTY
1	GA3501586	ASSEMBLY DRAWING ONLY, HYDRAULIC CYLINDER, 3" BORE, 500mm STROKE, EXTENDABLE AXLE, REAR, G4 S2	1
2	GA5008519	CIRCLIP, EXTERNAL, 25mm	1
3	GA3500700	HYDRAULIC ADAPTOR, ELBOW, 90 DEGREE, 9/16" JIC MALE X 3/4" UN MALE O-RING, S91-0912	1
4	GA4583615	PIN, RAM, EXTENDABLE AXLE, G4 S2	1
GA4952260-04 GOLDACRES		ASSEMBLY DRAWING ONLY. REAR AXLE ADJUSTABLE, 2000-3000mm WIDE, G4 S2 MY24	REV 00

Rear Extendable Axle Inner, Hydraulic Cylinder Mounting, 2-3mt, LH Side

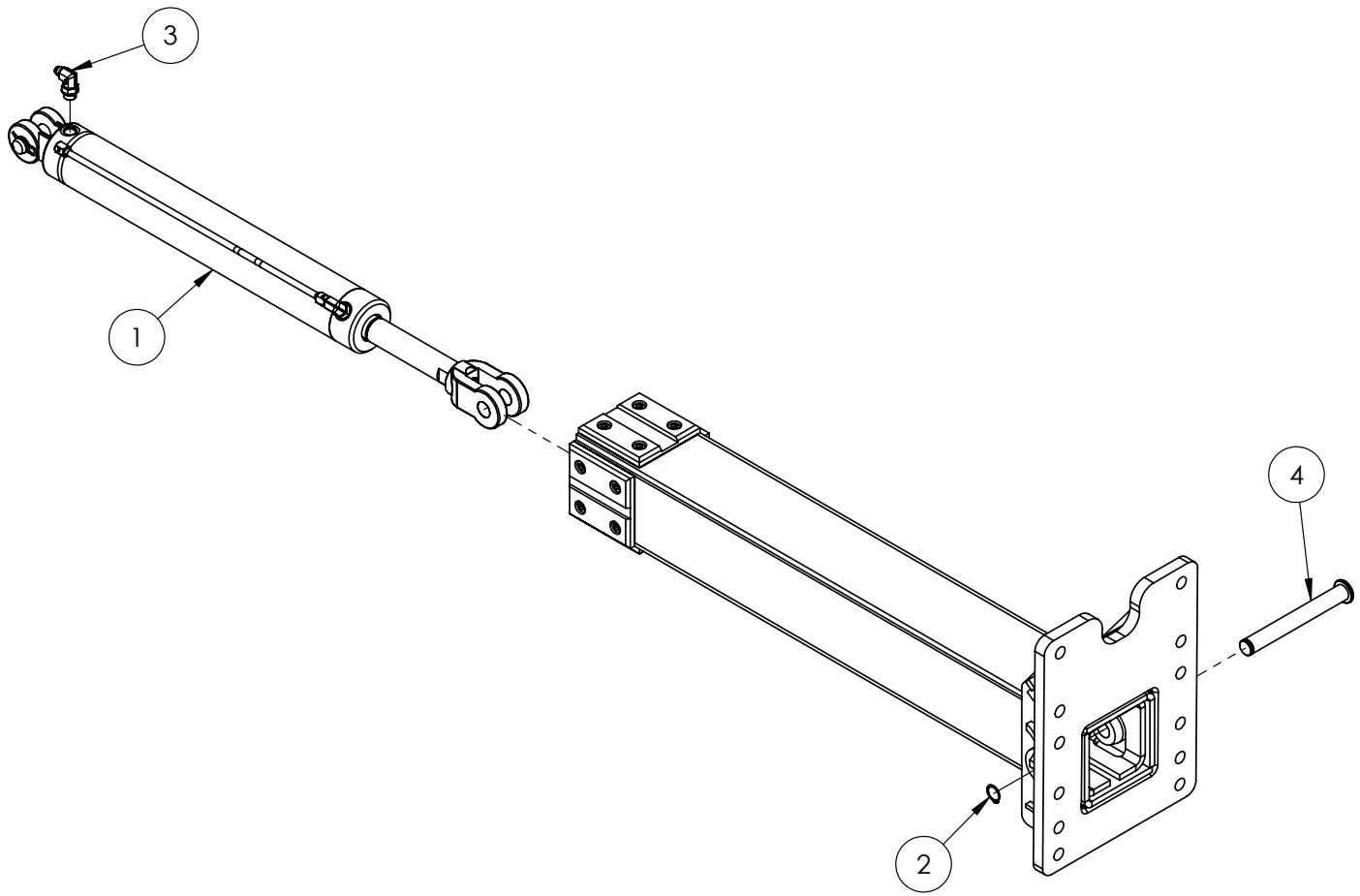

IF DESCRIPTION PREFIX IS ASSEMBLY DRAWING ONLY OR PRODUCTION DRAWING ONLY THE ITEM IS NOT FOR SALE			
ITEM	PART NUMBER	DESCRIPTION	QTY
1	GA3501586	ASSEMBLY DRAWING ONLY, HYDRAULIC CYLINDER, 3" BORE, 500mm STROKE, EXTENDABLE AXLE, REAR, G4 S2	1
2	GA5008519	CIRCLIP, EXTERNAL, 25mm	1
3	GA3500700	HYDRAULIC ADAPTOR, ELBOW, 90 DEGREE, 9/16" JIC MALE X 3/4" UN MALE O-RING, S91-0912	1
4	GA4583615	PIN, RAM, EXTENDABLE AXLE, G4 S2	1
GA4952260-05 GOLDACRES		ASSEMBLY DRAWING ONLY. REAR AXLE ADJUSTABLE, 2000-3000mm WIDE, G4 S2 MY24	REV 00

Cylinder Hydraulic, Extendable Axle with Ram Extension

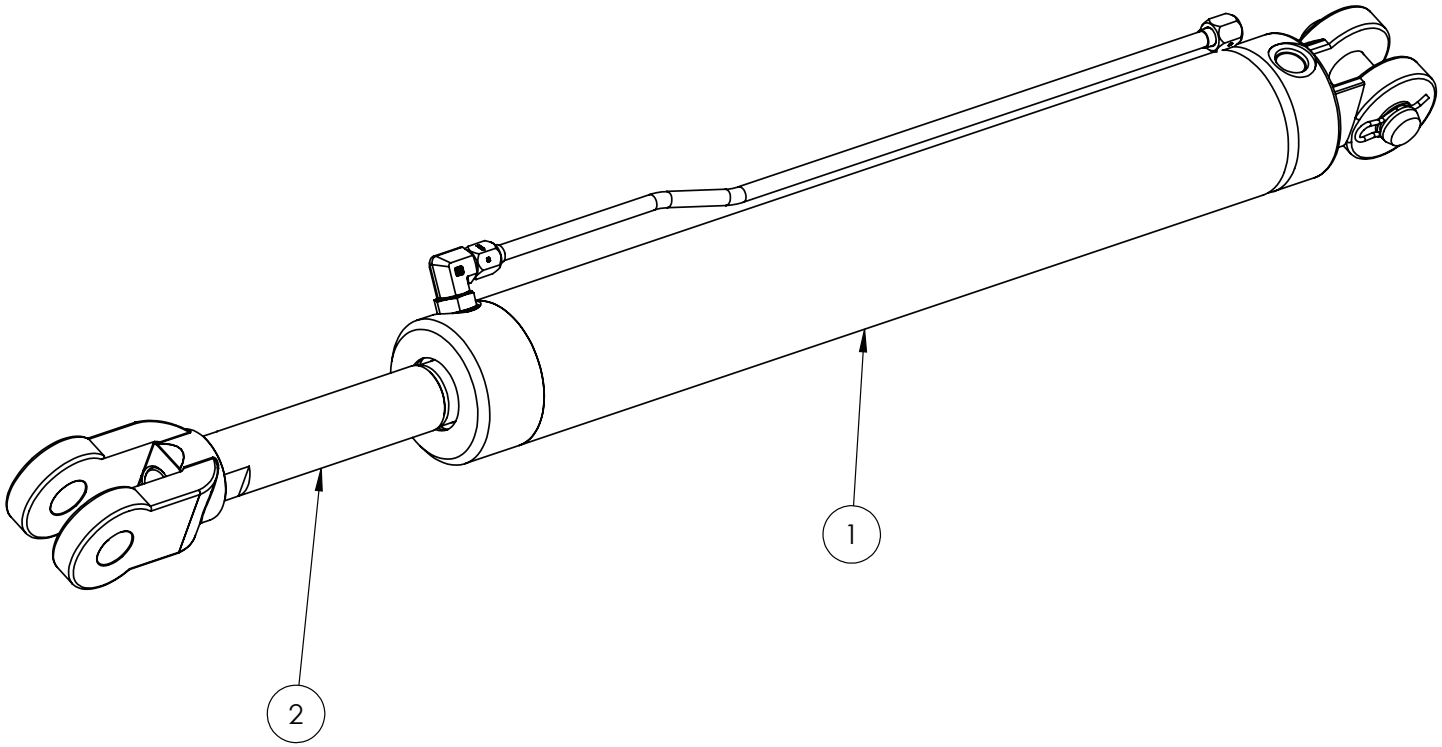

IF DESCRIPTION PREFIX IS ASSEMBLY DRAWING ONLY OR PRODUCTION DRAWING ONLY THE ITEM IS NOT FOR SALE			
ITEM	PART NUMBER	DESCRIPTION	QTY
1	GA3500108	HYDRAULIC CYLINDER, 3" BORE, 500mm STROKE, ADJUSTABLE AXLE, G5 G6	1
2	GA4583630	RAM EXTENSION, REAR EXTENDABLE AXLES, 2-3M, G4 S2	1
GA3501586 GOLDACRES		ASSEMBLY DRAWING ONLY, HYDRAULIC CYLINDER, 3" BORE, 500mm STROKE, EXTENDABLE AXLE, REAR, G4 S2	REV 00

Rear Axle, 2-3mt, Adjustable, Differential Centre Mounting, Dromos

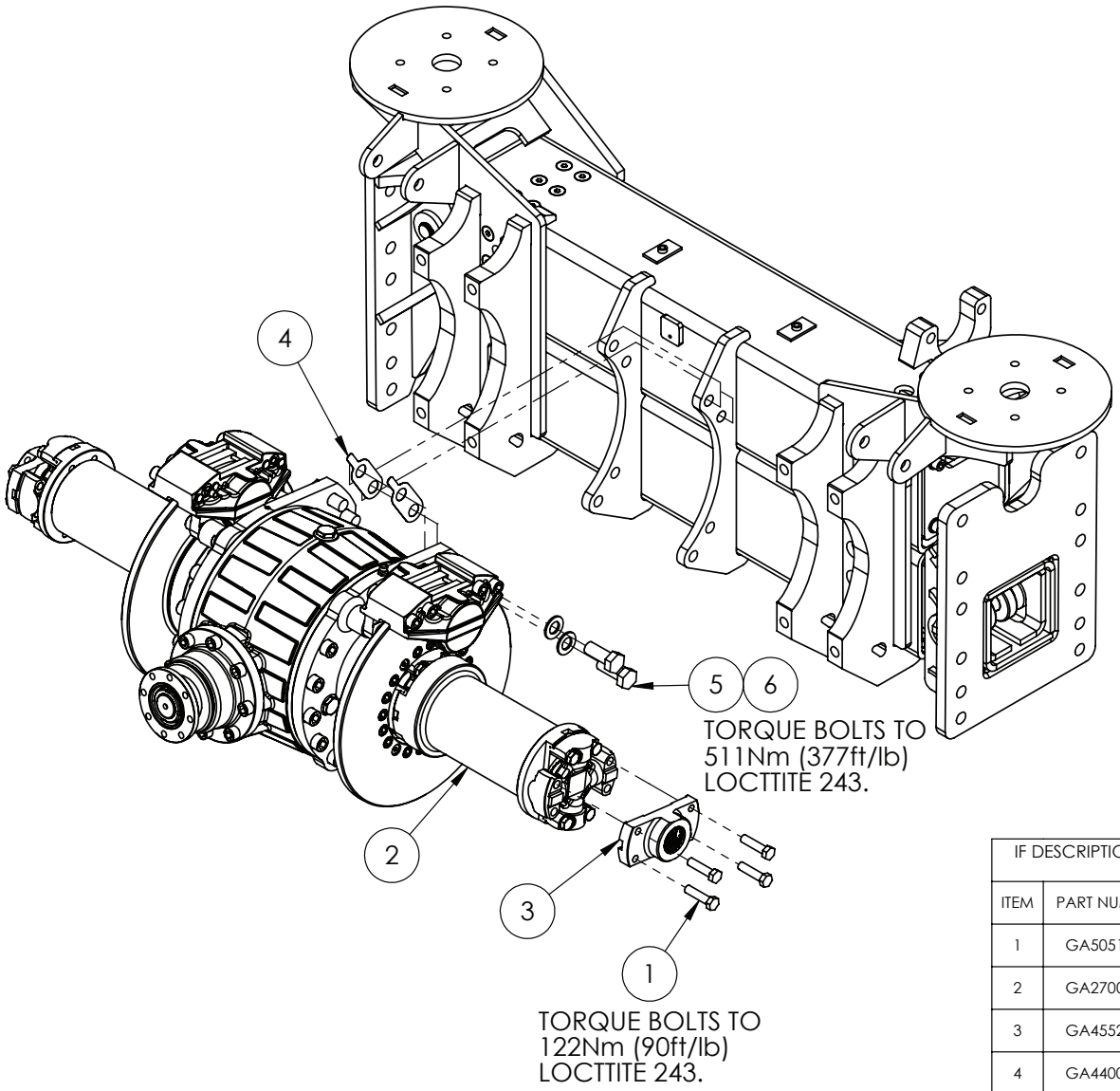

IF DESCRIPTION PREFIX IS ASSEMBLY DRAWING ONLY OR PRODUCTION DRAWING ONLY THE ITEM IS NOT FOR SALE			
ITEM	PART NUMBER	DESCRIPTION	QTY
1	GA5051295	BOLT 1/2" UNF X 2" G8 ZP	8
2	GA2700001	DIFFERENTIAL, WITH ADJUSTABLE DRIVE SHAFTS AND BRAKES FITTED SUIT 2 TO 3m, DROMOS	1
3	GA4552201	DRIVE SHAFT FLANGE DROPLEG INPUT ADJUSTABLE AXLE	2
4	GA4400275	PLATE, DIFF SHIM, DROMOS 2-3M, 0.5mm	4
5	GA5001515	SET SCREW M20 X 1.5P X 50 GR8.8 ZP	8
6	GA5001741	WASHER 20mm FLAT SS HD	8
GA4952260-07 GOLDACRES		ASSEMBLY DRAWING ONLY. REAR AXLE ADJUSTABLE, 2000-3000mm WIDE, G4 S2 MY24	REV 00

Rear Axle, 2-3mt, Adjustable, Drop Leg Mounting

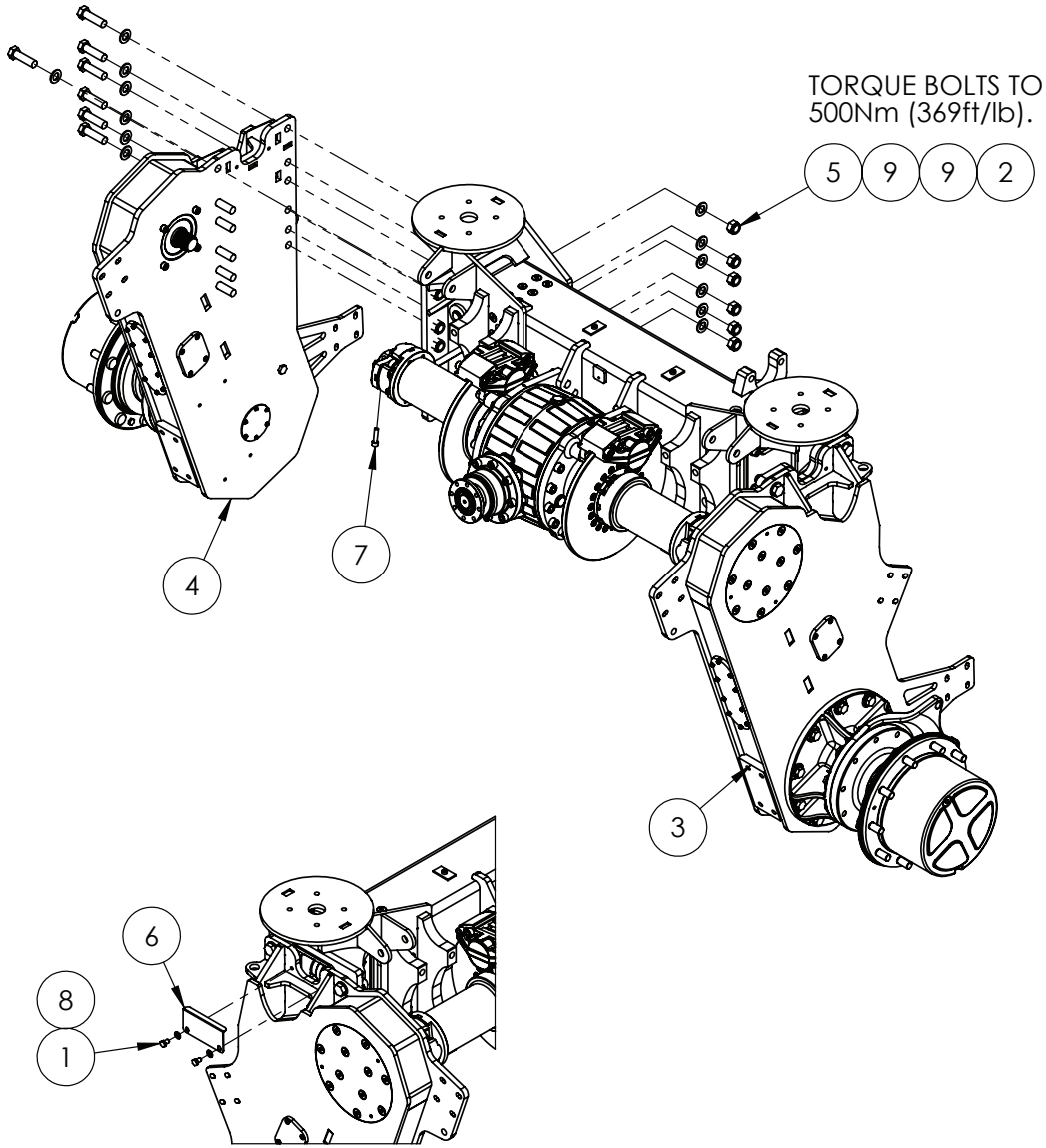

IF DESCRIPTION PREFIX IS ASSEMBLY DRAWING ONLY OR PRODUCTION DRAWING ONLY THE ITEM IS NOT FOR SALE			
ITEM	PART NUMBER	DESCRIPTION	QTY
1	GA5006143	BOLT M10 X 16 GR8.8 ZP	2
2	GA0500094	BOLT, M20 X 1.5P X 70, GR 8.8, ZP	14
3	GA4951895	DROP LEG, 2X4 AND 4X4 ASSEMLY LHS, REAR, G4 S2, MY24	1
4	GA4951900	DROP LEG, 2X4 AND 4X4 ASSEMLY RHS, REAR, G4 S2, MY24	1
5	GA5001513	NUT M20 X 1.5P NYLOC ZP	24
6	GA4415170	PLATE, DROPLEG DUST COVER, 2-3m G4	1
7	GA5006141	SHCS M10 X 40 GR12.9 ZP	2
8	GA5000117	WASHER 10mm FLAT SS HD	2
9	GA5001741	WASHER 20mm FLAT SS HD	38
GA4952260-08 GOLDACRES		ASSEMBLY DRAWING ONLY. REAR AXLE ADJUSTABLE, 2000-3000mm WIDE, G4 S2 MY24	REV 00

Rear Axle, 2-3mt, Adjustable, Breather & Brake Line Hardware

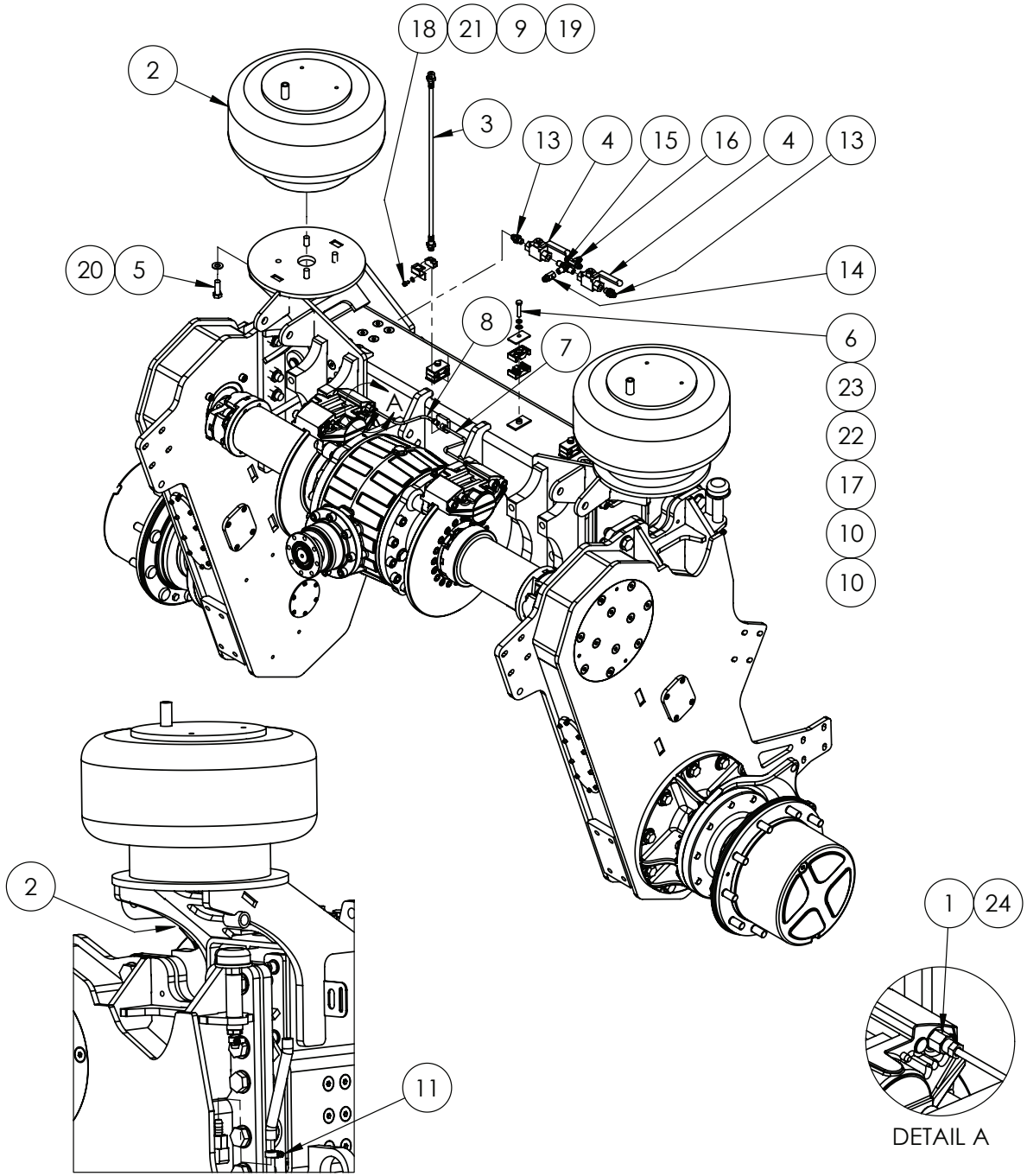

IF DESCRIPTION PREFIX IS ASSEMBLY DRAWING ONLY OR PRODUCTION DRAWING ONLY THE ITEM IS NOT FOR SALE			
ITEM	PART NUMBER	DESCRIPTION	QTY
1	GA5067625	ADAPTOR, M10 X 1mm MALE - M12 X 1mm FEMALE	2
2	GA5005311	AIR SPRING HT230 SINGLE AIR STUD	2
3	GA5025944	BRAIDED BRAKE HOSE, CHASSIS TO AXLE, ADJUSTIBLE AXLE, 550mm LONG, DOT 4	1
4	GA5078083	BALL VALVE 1/4" BSPP	2
5	GA5006167	BOLT 1/2 UNC X 1 1/2 GR8 ZP	8
6	GA5048655	BOLT M8 X 40 GR8.8 ZP	5
7	GA4954095	BRAKE LINE, RHS, ADJUSTIBLE AXLE, REAR, CENTRE, LHS, G4 S2	1
8	GA4954090	BRAKE LINE, RHS, ADJUSTIBLE AXLE, REAR, CENTRE, RHS, G4 S2	1
9	HYD002LAS	CLAMP BRACKET, HYDRAULIC FITTING	1
10	GA5078031	DOUBLE CLAMP JAWS PP GR 2 14mm	10
11	GA5000469	HOSE CLAMP, 1/2" SS 12-20/9W3	2
12	GA2000211	HOSE, 1/2" PRESSURE, CUT 900mm	1800
13	GA3500544	HYDRAULIC ADAPTOR NIPPLE, 1/4" BSP O-RING X 9/16" JIC, S74-0409	2
14	GA3501287	HYDRAULIC ADAPTOR, STRAIGHT, 1/4" BSPTF X 9/16" JICM S16-0409	1
15	GA3500269	HYDRAULIC ADAPTOR, TEE, 1/4" BSPT MALE X 1/4" BSPT MALE X 1/4" BSPT MALE, S50-040404	1
16	GA3500719	HYDRAULIC ADAPTOR, TEE, 9/16" JIC MALE X 9/16" JIC MALE X 9/16" JIC MALE, S19-090909	1
17	GA5078042	MOUNTING CLAMP, DOUBLE TYPE, PLATE, TOP, GROUP 2, RCD-2PT	5
18	GA5004025	SHCS M6 X 10 SS A2-70	1
19	GA5008793	TEE, FLARE, 7/16" 24 TPI FEMALE THREAD, SUIT 1/4" TUBE	1
20	GA5017673	WASHER 1/2" HIGH TENSILE	8
21	GA5004437	WASHER 6mm FLAT SS	1
22	GA5003643	WASHER 8mm FLAT SS HD	4
23	GA5004919	WASHER 8mm SPRING SS	5
24	GA5072395	WASHER, M10 X 14 X 1mm, COPPER	2
GA4952260-09 GOLDACRES		ASSEMBLY DRAWING ONLY. REAR AXLE ADJUSTABLE, 2000-3000mm WIDE, G4 S2 MY24	REV 01

Rear Axle, 2-3mt, Adjustable, Sway Bar & Torque Rod Mounting

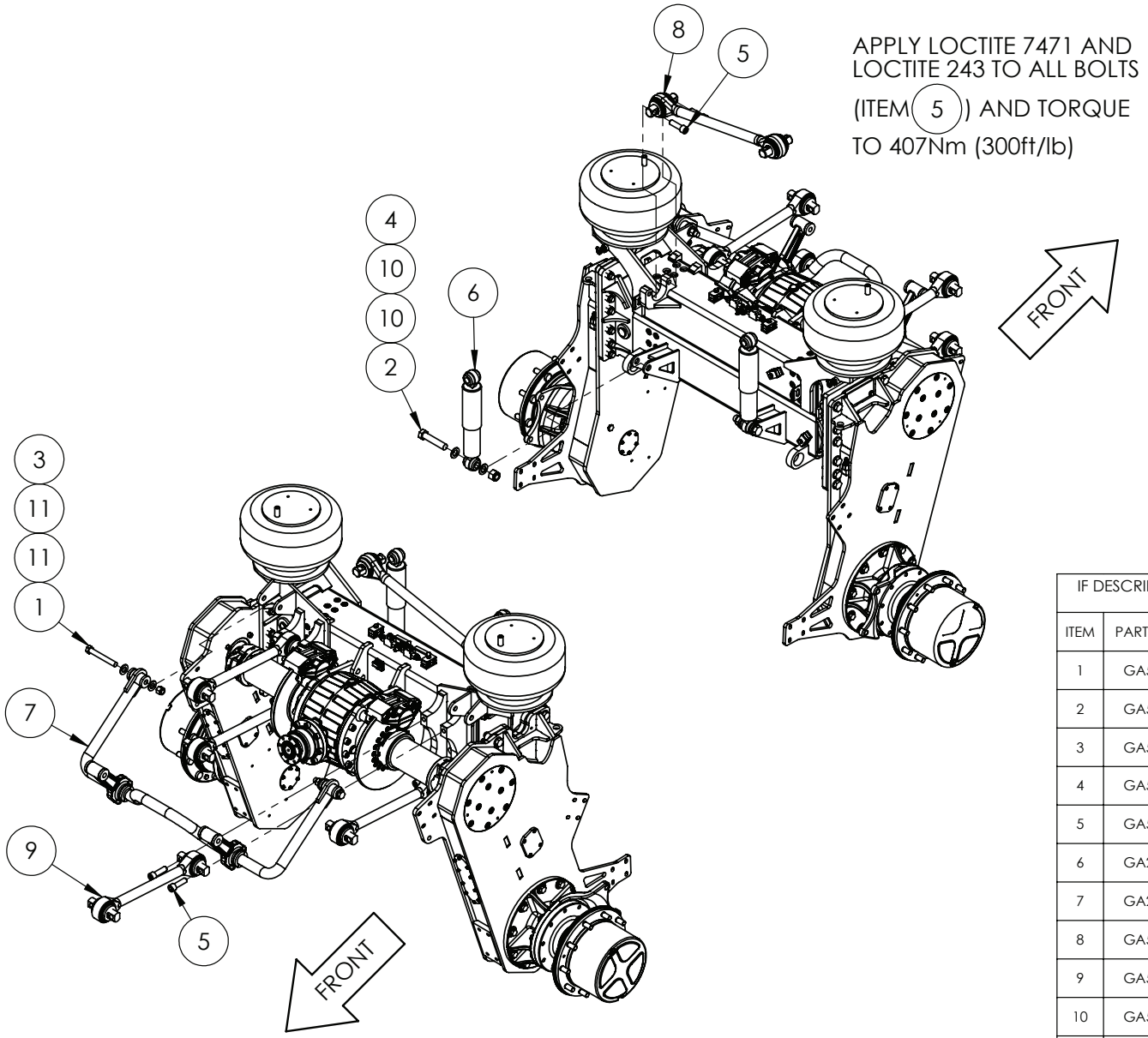

IF DESCRIPTION PREFIX IS ASSEMBLY DRAWING ONLY OR PRODUCTION DRAWING ONLY THE ITEM IS NOT FOR SALE			
ITEM	PART NUMBER	DESCRIPTION	QTY
1	GA5070335	BOLT 3/4 UNC X 5 1/2 GR8 ZP	2
2	GA5011346	BOLT M24 X 115 GR8.8 ZP SPECIAL 75 TO 77mm SHANK	2
3	GA5048430	NUT 3/4 UNC NYLOC ZP	2
4	GA5012469	NUT M24 NYLOC ZP	2
5	GA5053145	SHCS 3/4 UNF X 2 1/2 GR12.9 ZP BLUE	10
6	GA2500000	SHOCK ABSORBER, DOUBLE EYE, 24mm EYE, 80mm OD, RED	2
7	GA2500007	SWAY BAR ASSEMBLY	1
8	GA5068850	TORQUE ROD (HOLLOW) ATRO 650mm CENTRE	1
9	GA5068852	TORQUE ROD, 500mm, HOLLOW	4
10	GA5001891	WASHER 24mm FLAT HD SS	4
11	GA5001045	WASHER, 3/4" FLAT, HD ZP	4
GA4952260-10 GOLDACRES		ASSEMBLY DRAWING ONLY. REAR AXLE ADJUSTABLE, 2000-3000mm WIDE, G4 S2 MY24	REV 00

Rear Axle, 3-4mt, Manual Adjust

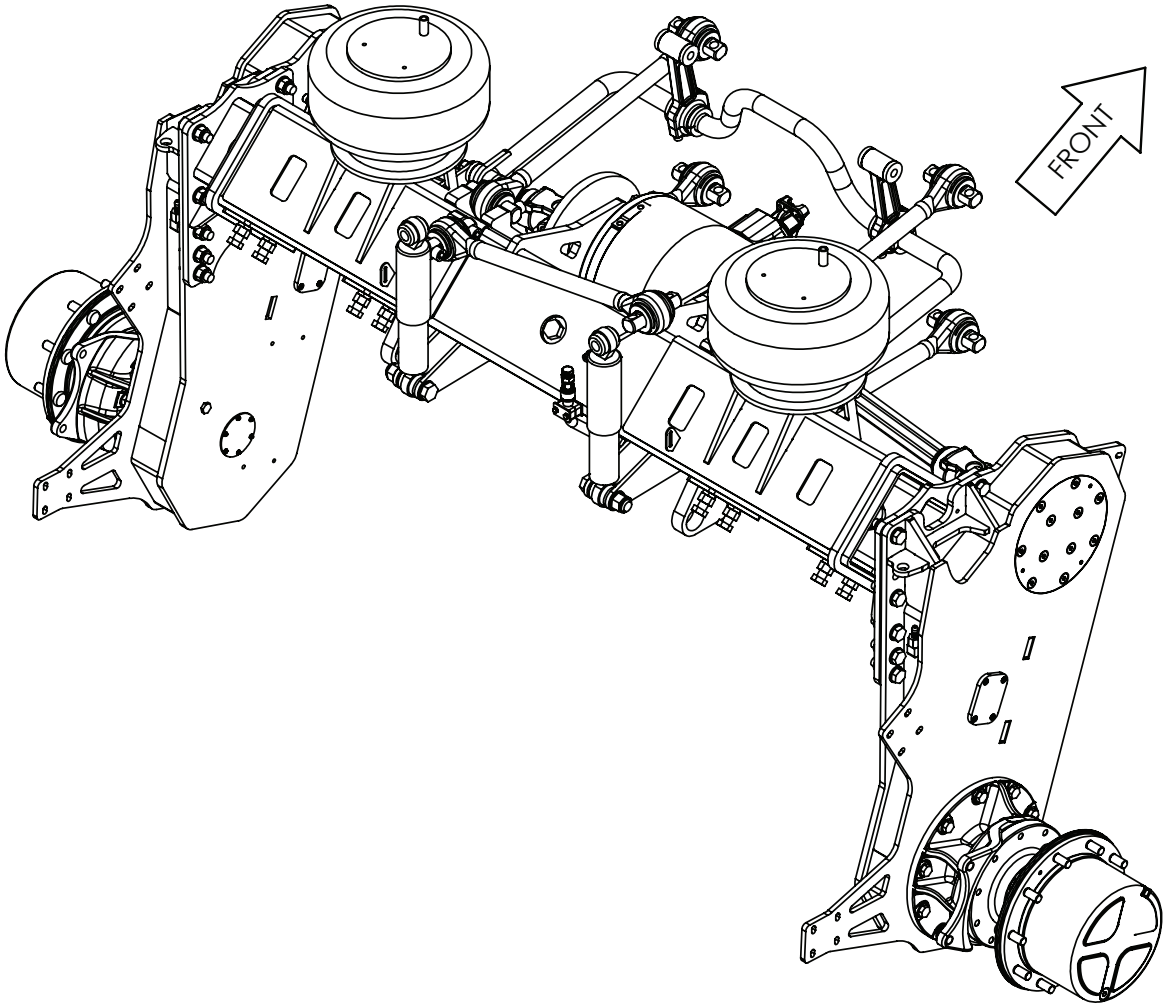

BUILD OPTIONS:
40047 - ADJUSTABLE WHEEL TRACK 3000-4000mm, MANUAL ADJUST

GA4952270 GOLDACRES	ASSEMBLY DRAWING ONLY. REAR AXLE ASSY, 3000-4000mm WIDE, G4 S2, MY24	REV 00

Rear Axle, 3-4mt, Manual Adjust, Differential Centre Mounting

BOLTS ARE SINGLE USE ONLY ONCE TORQUED.
TORQUE BOLTS TO 244Nm (180ft/lb) LOCTITE 243.

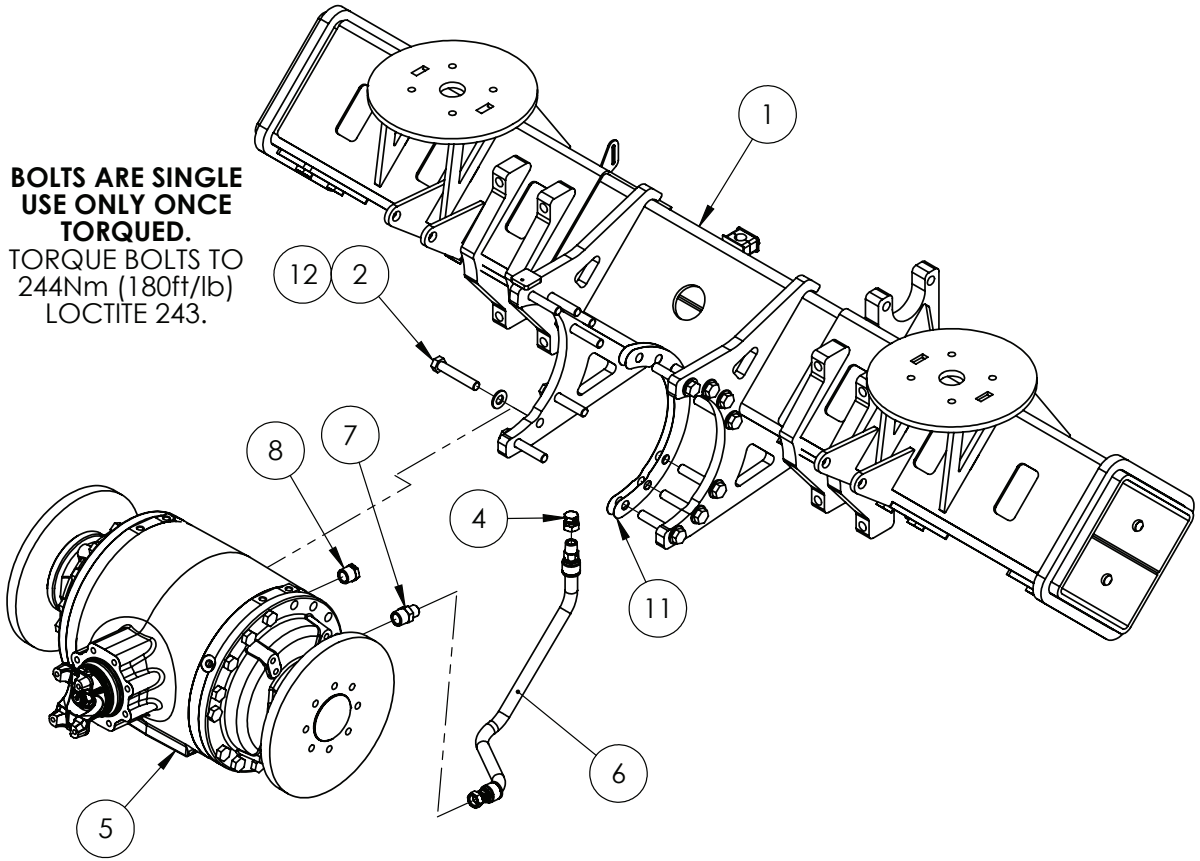

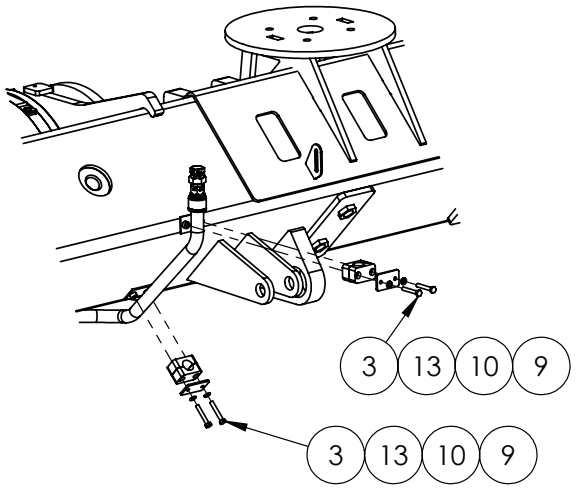

IF DESCRIPTION PREFIX IS ASSEMBLY DRAWING ONLY OR PRODUCTION DRAWING ONLY THE ITEM IS NOT FOR SALE			
ITEM	PART NUMBER	DESCRIPTION	QTY
1	GA4952270-01	ASSEMBLY DRAWING ONLY. REAR AXLE ASSY, 3000-4000mm WIDE, G4 S2, MY24	1
2	GA5011297	BOLT M16 X 90 GR8.8 ZP	14
3	GA5004081	BOLT M6 X 40 GR8.8 ZP	4
4	GA3500278	CAP, SWIVEL, 1/2" BSPP FEMALE, S59-08	1
5	GA5071175	DIFF CENTRE, 3.364:1 RATIO, SOFT ENGAGE DIFF, G3 G4, JCB	1
6	GA3501772	HYDRAULIC HOSE ASSEMBLY, 1/2", 1/2" BSPT ST FEMALE, 1/2" BSPT ST MALE	1
7	GA3500226	HYDRAULIC ADAPTOR, NIPPLE, 3/4" BSPT MALE X 1/2" BSPT MALE	1
8	GA3500288	HYDRAULIC ADAPTOR, PLUG, 3/4" BSPT MALE	1
9	GA5078065	MOUNTING CLAMP, SINGLE TYPE, JAW, PAIR, GROUP 3, 22mm, RCS-22J	2
10	GA5078072	MOUNTING CLAMP, SINGLE TYPE, PLATE, TOP, GROUP 3, RCS-3PT	2
11	GA4508960	PLATE, SHIM 0.5mm, JCB DIFF CENTRE, G3 G4	2
12	GA5001043	WASHER 16mm FLAT SS HD	14
13	GA5004437	WASHER 6mm FLAT SS	4
GA4952270-02 GOLDACRES		ASSEMBLY DRAWING ONLY. REAR AXLE ASSY, 3000-4000mm WIDE, G4 S2, MY24	REV 00

Rear Axle, 3-4mt, Manual Adjust, Drop Leg Mounting

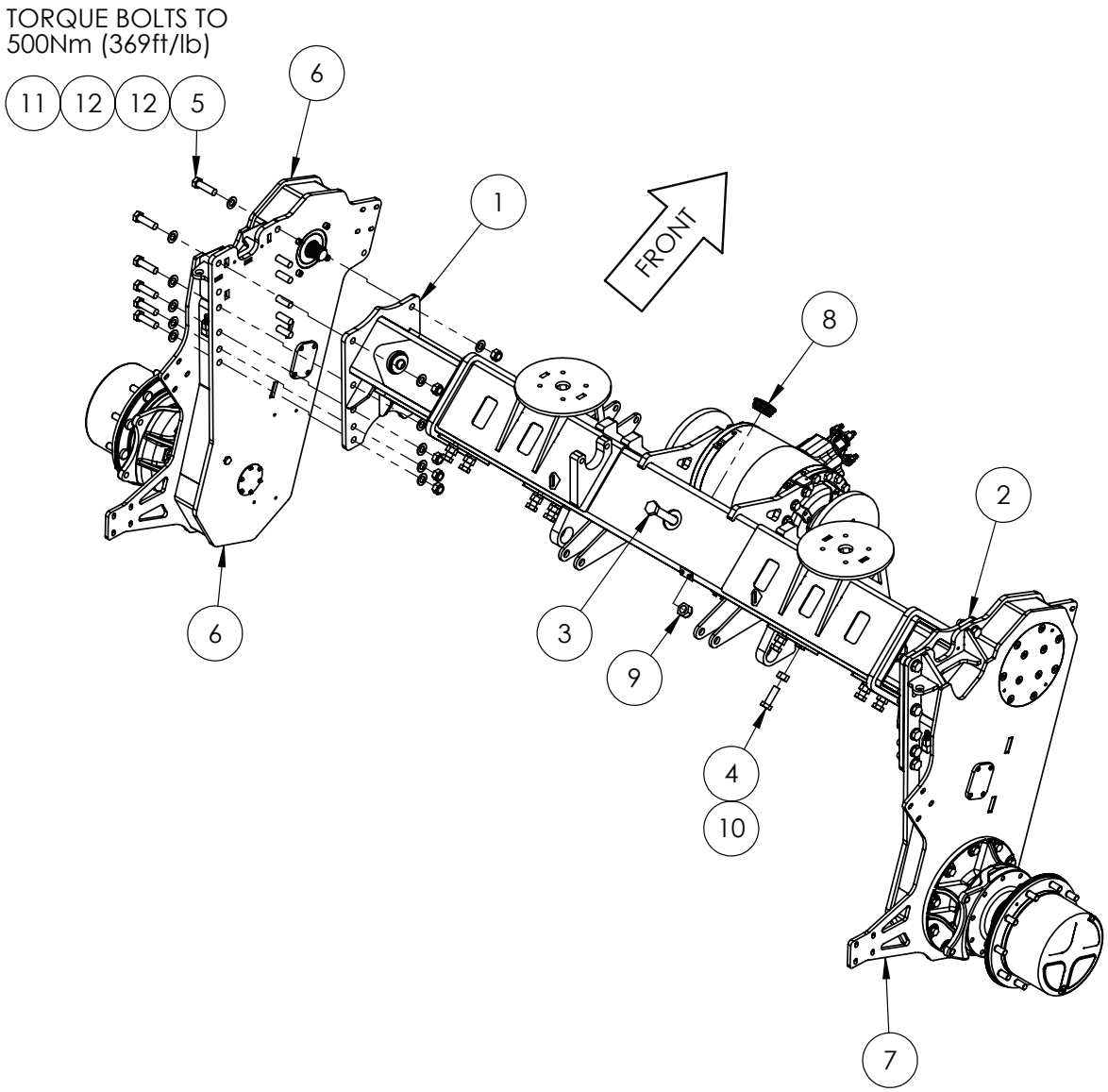

IF DESCRIPTION PREFIX IS ASSEMBLY DRAWING ONLY OR PRODUCTION DRAWING ONLY THE ITEM IS NOT FOR SALE			
ITEM	PART NUMBER	DESCRIPTION	QTY
1	GA4661130	AXLE HOUSING REAR, 3-4m LH, G3 G4	1
2	GA4661125	AXLE HOUSING REAR, 3-4m RH, G3 G4	1
3	GA0500159	BOLT 1 UNF	1
4	GA5011333	BOLT M20 X 60 GR8.8 ZP	16
5	GA0500094	BOLT, M20 X 1.5P X 70, GR 8.8, ZP	12
6	GA4951895	DROP LEG, 2X4 AND 4X4 ASSEMLY LHS, REAR, G4 S2, MY24	1
7	GA4951900	DROP LEG, 2X4 AND 4X4 ASSEMLY RHS, REAR, G4 S2, MY24	1
8	GA5050355	INSERT TO SUIT 65NB TUBE	1
9	GA5012439	NUT 1" NYLOC UNC ZP	1
10	GA5001709	NUT M20 COARSE ZP	16
11	GA5001513	NUT M20 X 1.5P NYLOC ZP	20
12	GA5001741	WASHER 20mm FLAT SS HD	32
GA4952270-03 GOLDACRES		ASSEMBLY DRAWING ONLY. REAR AXLE ASSY, 3000-4000mm WIDE, G4 S2, MY24	REV 00

Rear Axle, 3-4mt, Manual Adjust, Diff Drain & Air Spring

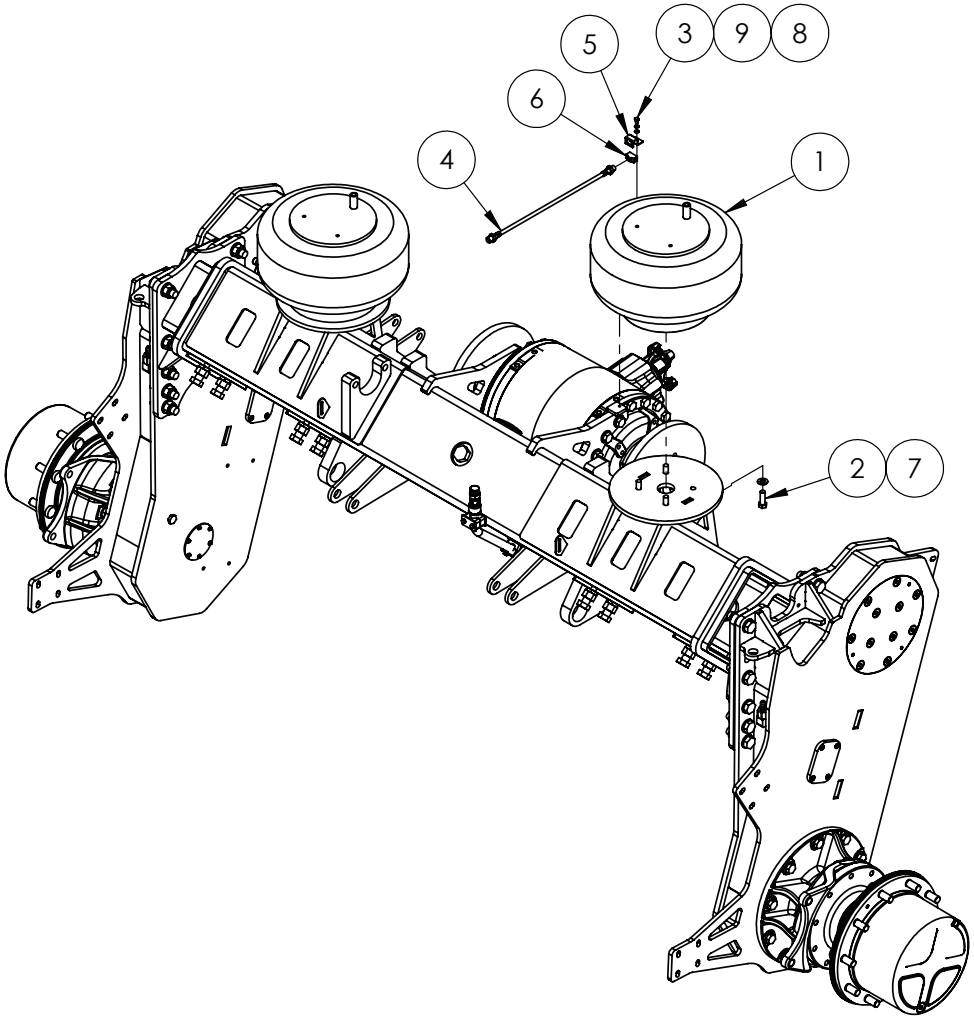

IF DESCRIPTION PREFIX IS ASSEMBLY DRAWING ONLY OR PRODUCTION DRAWING ONLY THE ITEM IS NOT FOR SALE			
ITEM	PART NUMBER	DESCRIPTION	QTY
1	GA5005311	AIR SPRING HT230 SINGLE AIR STUD	2
2	GA5006167	BOLT 1/2 UNC X 1 1/2 GR8 ZP	8
3	GA5004029	BOLT M6 X 10 GR8.8 ZP	1
4	GA5006303	BRAKE HOSE, CHASSIS TO AXLE, STD AXLE, 470mm LONG	1
5	HYD002LAS	CLAMP BRACKET, HYDRAULIC FITTING	1
6	GA5008793	TEE, FLARE, 7/16" 24 TPI FEMALE THREAD, SUIT 1/4" TUBE	1
7	GA5017673	WASHER 1/2" HIGH TENSILE	8
8	GA5004437	WASHER 6mm FLAT SS	1
9	GA5004447	WASHER 6mm SPRING SS	1
GA4952270-04 GOLDACRES		ASSEMBLY DRAWING ONLY. REAR AXLE ASSY, 3000-4000mm WIDE, G4 S2, MY24	REV 00

Rear Axle, 3-4mt, Manual Adjust, Drive Shaft & Shocker Mounting

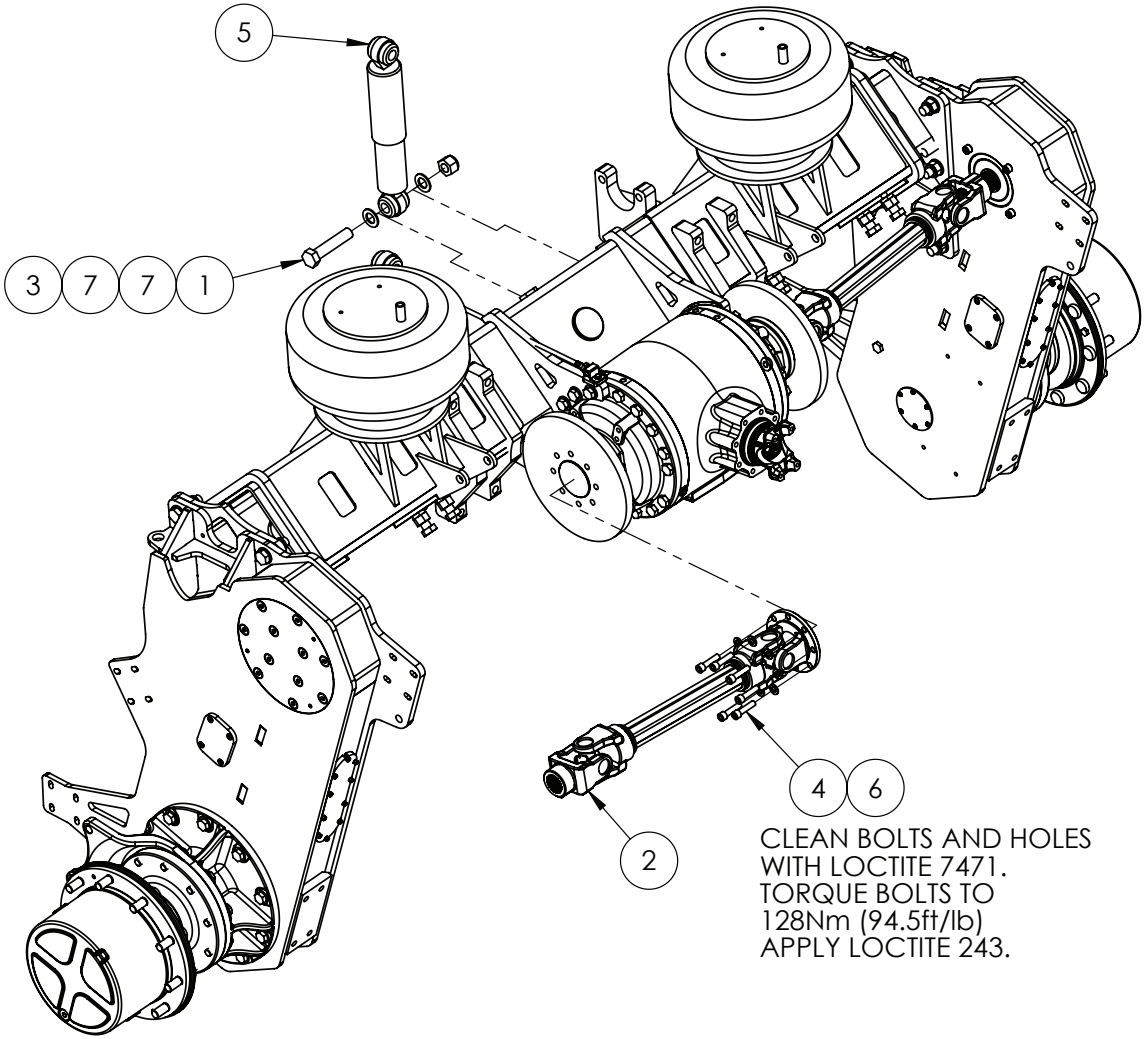

CLEAN BOLTS AND HOLES WITH LOCTITE 7471. TORQUE BOLTS TO 128Nm (94.5ft/lb) APPLY LOCTITE 243.

IF DESCRIPTION PREFIX IS ASSEMBLY DRAWING ONLY OR PRODUCTION DRAWING ONLY THE ITEM IS NOT FOR SALE			
ITEM	PART NUMBER	DESCRIPTION	QTY
1	GA5011346	BOLT M24 X 115 GR8.8 ZP SPECIAL 75 TO 77mm SHANK	2
2	GA5071740	DRIVE SHAFT ASSEMBLY, DOUBLE YOKE, 3M, G3 G4 SERIES	2
	GA5072040	DRIVE SHAFT ASSEMBLY, DOUBLE YOKE, 4M, G3 G4	2
3	GA5012469	NUT M24 NYLOC ZP	2
4	GA5051470	SHCS M12 X 50 GR12.9 ZP	16
5	GA2500000	SHOCK ABSORBER, DOUBLE EYE, 24mm EYE, 80mm OD, RED	2
6	GA5000577	WASHER 12mm FLAT SS HD	16
7	GA5001891	WASHER 24mm FLAT HD SS	4
GA4952270-05 GOLDACRES		ASSEMBLY DRAWING ONLY. REAR AXLE ASSY, 3000-4000mm WIDE, G4 S2, MY24	REV 00.B

Rear Axle, 3-4mt, Manual Adjust, Sway Bar & Linkage Arms

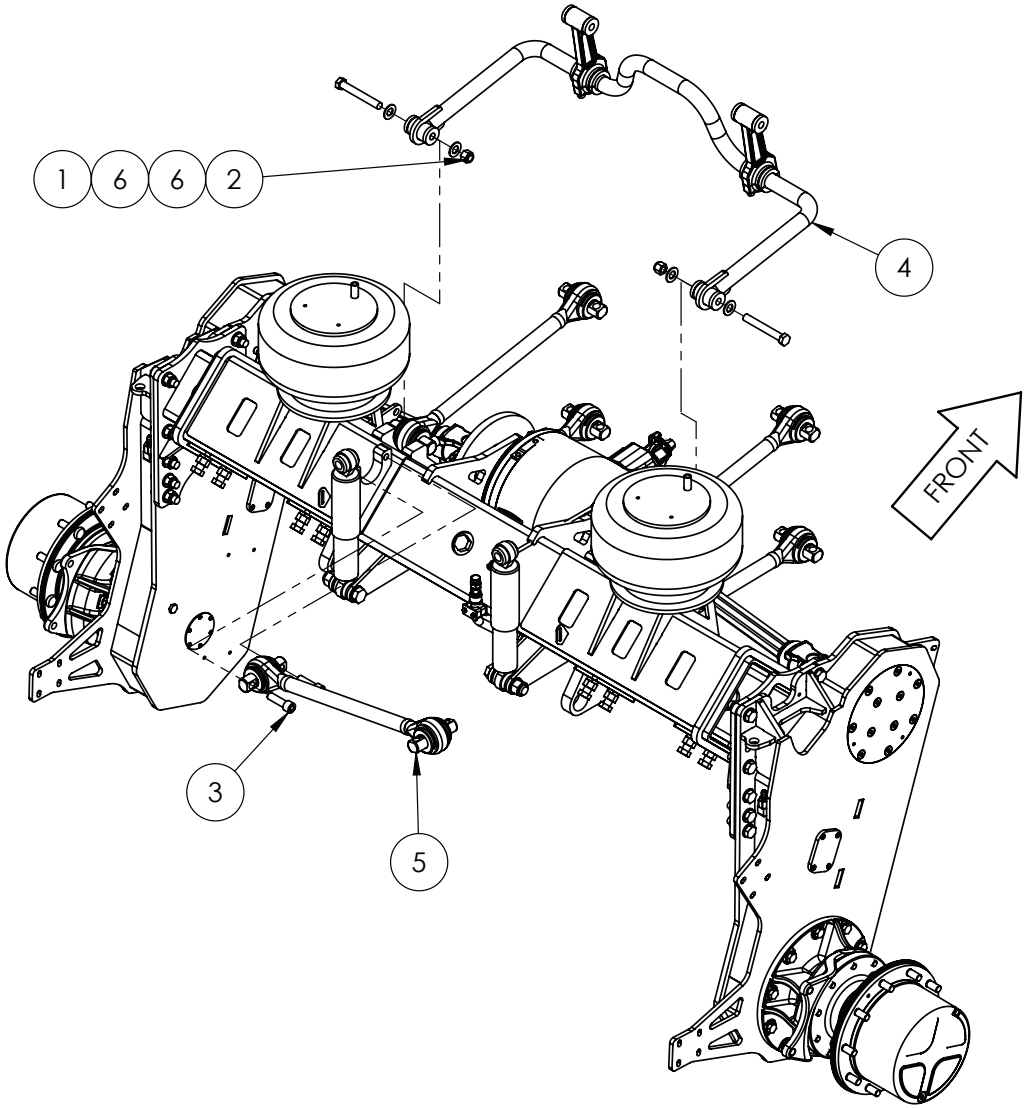

APPLY LOCTITE 7471 AND
LOCTITE 243 TO ALL BOLTS

(ITEM 3) ON FRONT SIDE ONLY.

FIT LOWER RODS FIRST AND
TORQUE TO 407Nm (300ft/lb)

IF DESCRIPTION PREFIX IS ASSEMBLY DRAWING ONLY OR PRODUCTION DRAWING ONLY THE ITEM IS NOT FOR SALE			
ITEM	PART NUMBER	DESCRIPTION	QTY
1	GA5070335	BOLT 3/4 UNC X 5 1/2 GR8 ZP	2
2	GA5048430	NUT 3/4 UNC NYLOC ZP	2
3	GA5053145	SHCS 3/4 UNF X 2 1/2 GR12.9 ZP BLUE	10
4	GA2500007	SWAY BAR ASSEMBLY	1
5	GA5068850	TORQUE ROD (HOLLOW) ATRO 650mm CENTRE	5
6	GA5001045	WASHER, 3/4" FLAT, HD ZP	4
GA4952270-06 GOLDACRES		ASSEMBLY DRAWING ONLY. REAR AXLE ASSY, 3000-4000mm WIDE, G4 S2, MY24	REV 00.B

Sway Bar Assembly

REPLACEMENT PARTS			
ITEM	PART NUMBER	DESCRIPTION	QTY
A	GA5024595	SWAY BAR HANGER KIT, SELF PROPELLED, MY17 ON	2

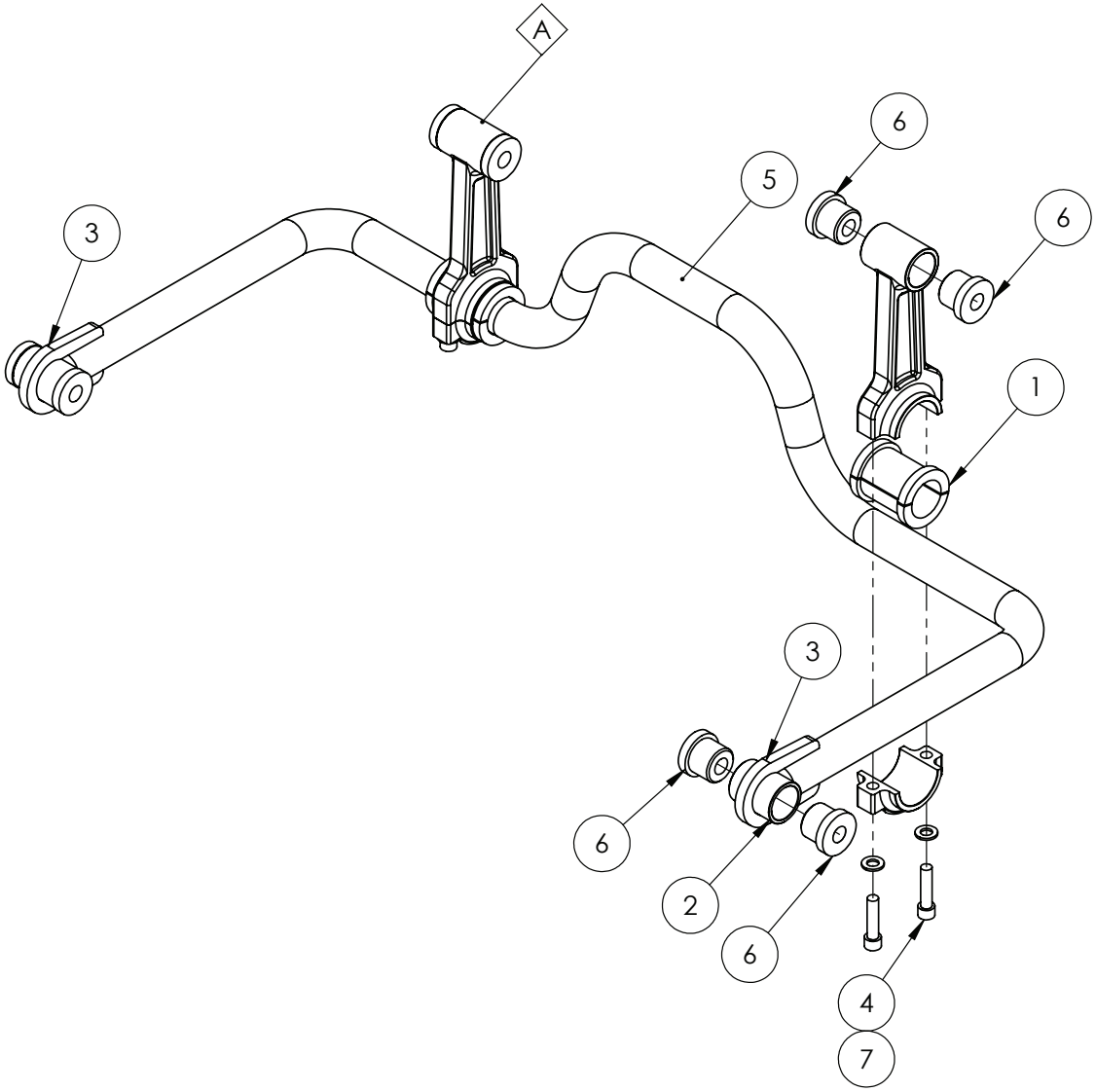

IF DESCRIPTION PREFIX IS ASSEMBLY DRAWING ONLY OR PRODUCTION DRAWING ONLY THE ITEM IS NOT FOR SALE			
ITEM	PART NUMBER	DESCRIPTION	QTY
1	GA4583635	BUSH, LOWER SWAY BAR, 48mm ID NYLON, G3V G4V	2
2	GA4662685	BUSH, SWAY BAR END MOUNT	2
3	GA4413630	PLATE, GUSSET, SWAY BAR BUSH HOUSING, G4 S2	2
4	GA0500052	SHCS, M12 X 50 GR10.9, ZP	4
5	GA2500008	SWAY BAR	1
6	GA5016195	SWAY BAR PIVOT BUSH	8
7	GA5000577	WASHER 12mm FLAT SS HD	4
GA2500007 GOLDACRES	SWAY BAR ASSEMBLY, G4 S2		REV 01.B

Torque Rod Assembly, 650mm

REPLACEMENT PARTS			
ITEM	PART NUMBER	DESCRIPTION	QTY
-	GA4537165	SHIM, PANHARD ROD, 1mm, SELF PROPELLED	-
-	GA4537170	SHIM, PANHARD ROD, 3mm, SELF PROPELLED	-
-	GA4537175	SHIM, PANHARD ROD, 5mm, SELF PROPELLED	-
-	GA4505076	SHIM, SPACER BLOCK TORQUE ROD SUSPENSION ARM, 1mm	-
-	GA4505075	SHIM, SPACER BLOCK TORQUE ROD SUSPENSION ARM, 5mm	-

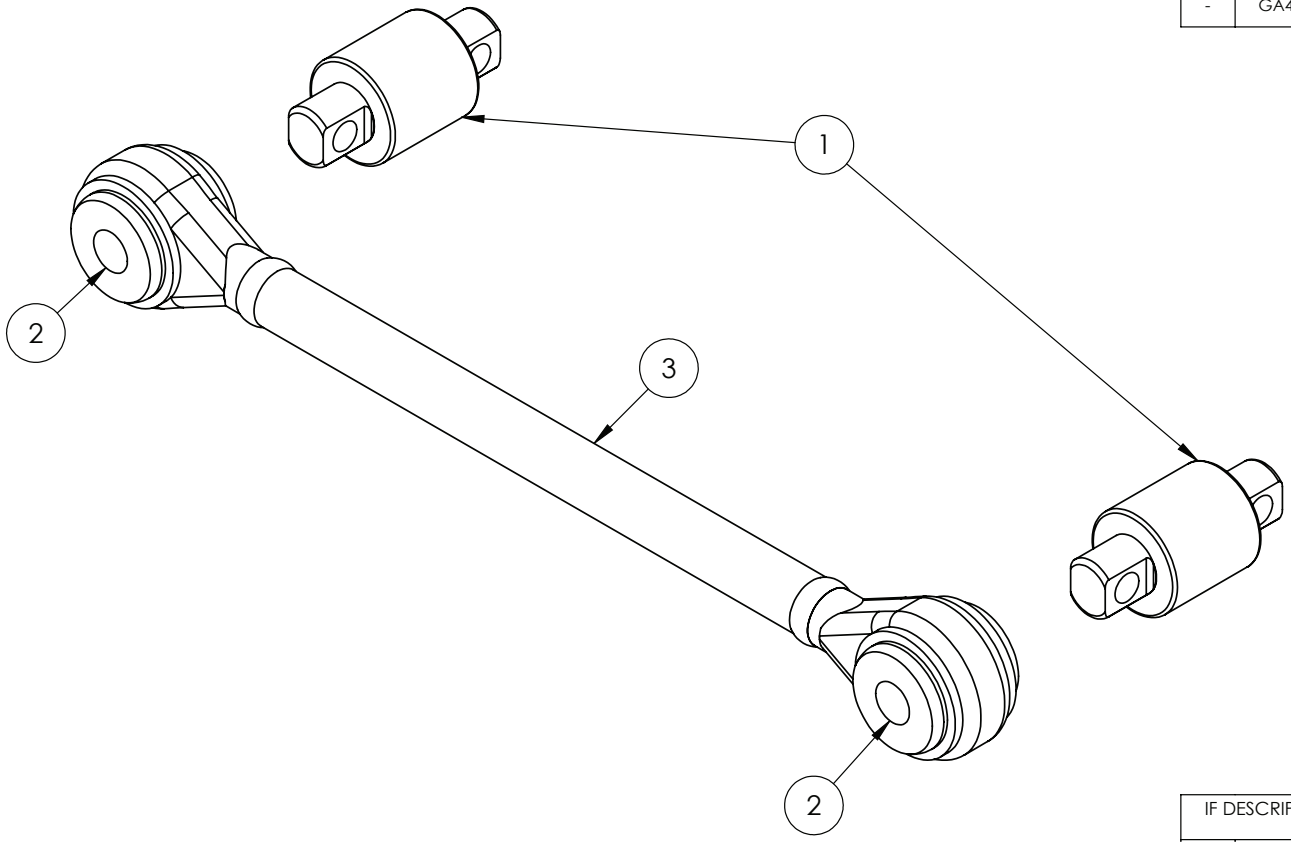

IF DESCRIPTION PREFIX IS ASSEMBLY DRAWING ONLY OR PRODUCTION DRAWING ONLY THE ITEM IS NOT FOR SALE			
ITEM	PART NUMBER	DESCRIPTION	QTY
1	GA5069825	BUSH SUIT ATRO SUSPENSION LINK	2
2	GA5053450	INSERT, RUBBER, SUIT KONI SHOCK ABSORBER A498/33/24 X 55	2
3	GA5068850	TORQUE ROD ATRO 650mm CENTRE	1
GA5068850 GOLDACRES		SUSPENSION LINK, TORQUE ROD, 650mm CENTRE, HOLLOW, ATRO	REV

TOOLS:
GA4660730 - PRESS TOOL BASE, ATRO TOQUE ROD
GA5055770 - PRESS TOOL, TORQUE ROD BUSH REMOVING, ATRO
GA5055775 - PRESS TOOL, TORQUE ROD BUSH INSTALLATION, ATRO

Torque Rod Assembly, 500mm

REPLACEMENT PARTS			
ITEM	PART NUMBER	DESCRIPTION	QTY
-	GA4537165	SHIM, PANHARD ROD, 1mm, SELF PROPELLED	-
-	GA4537170	SHIM, PANHARD ROD, 3mm, SELF PROPELLED	-
-	GA4537175	SHIM, PANHARD ROD, 5mm, SELF PROPELLED	-
-	GA4505076	SHIM, SPACER BLOCK TORQUE ROD SUSPENSION ARM, 1mm	-
-	GA4505075	SHIM, SPACER BLOCK TORQUE ROD SUSPENSION ARM, 5mm	-

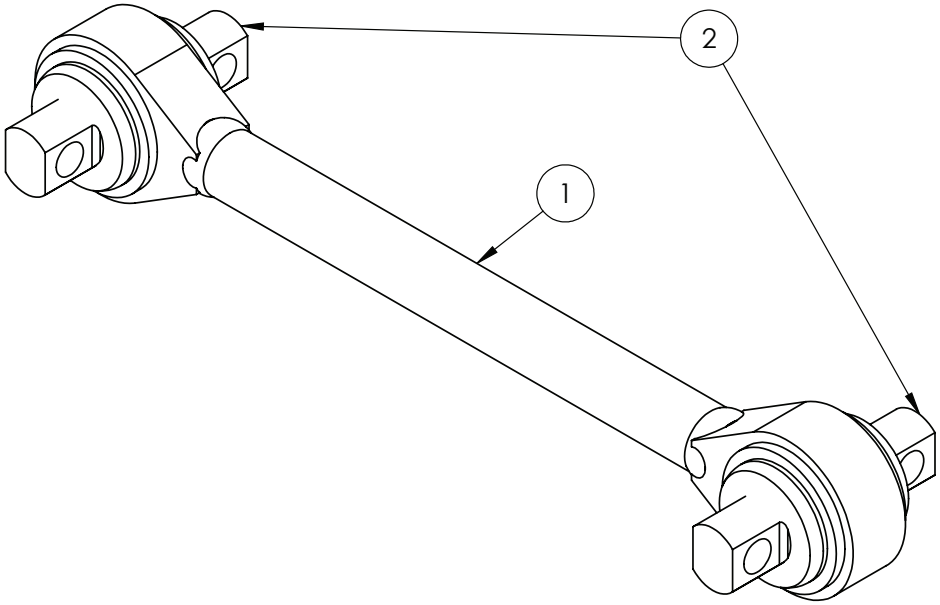

IF DESCRIPTION PREFIX IS ASSEMBLY DRAWING ONLY OR PRODUCTION DRAWING ONLY THE ITEM IS NOT FOR SALE			
ITEM	PART NUMBER	DESCRIPTION	QTY
1	GA5068852	TORQUE ROD, SUSPENSION LINK ADJUSTABLE AXLE 500mm CENTRES, SOLID, ATRO	1
2	GA5069825	BUSH, SUSPENSION LINK END REPLACEMENT, 3/4" BOLT HOLES, TS38750, ATRO	2
GA5068852 GOLDACRES		TORQUE ROD, SUSPENSION LINK ADJUSTABLE AXLE 500mm CENTRES, SOLID, ATRO	REV 01.B

TOOLS;
GA4660730 - PRESS TOOL BASE, ATRO TORQUE ROD
GA5055770 - PRESS TOOL, TORQUE ROD BUSH REMOVING, ATRO
GA5055775 - PRESS TOOL, TORQUE ROD BUSH INSTALLATION, ATRO

Rear Axle, 2WD & 4WD, Drop Leg Cover Plates, LH Side

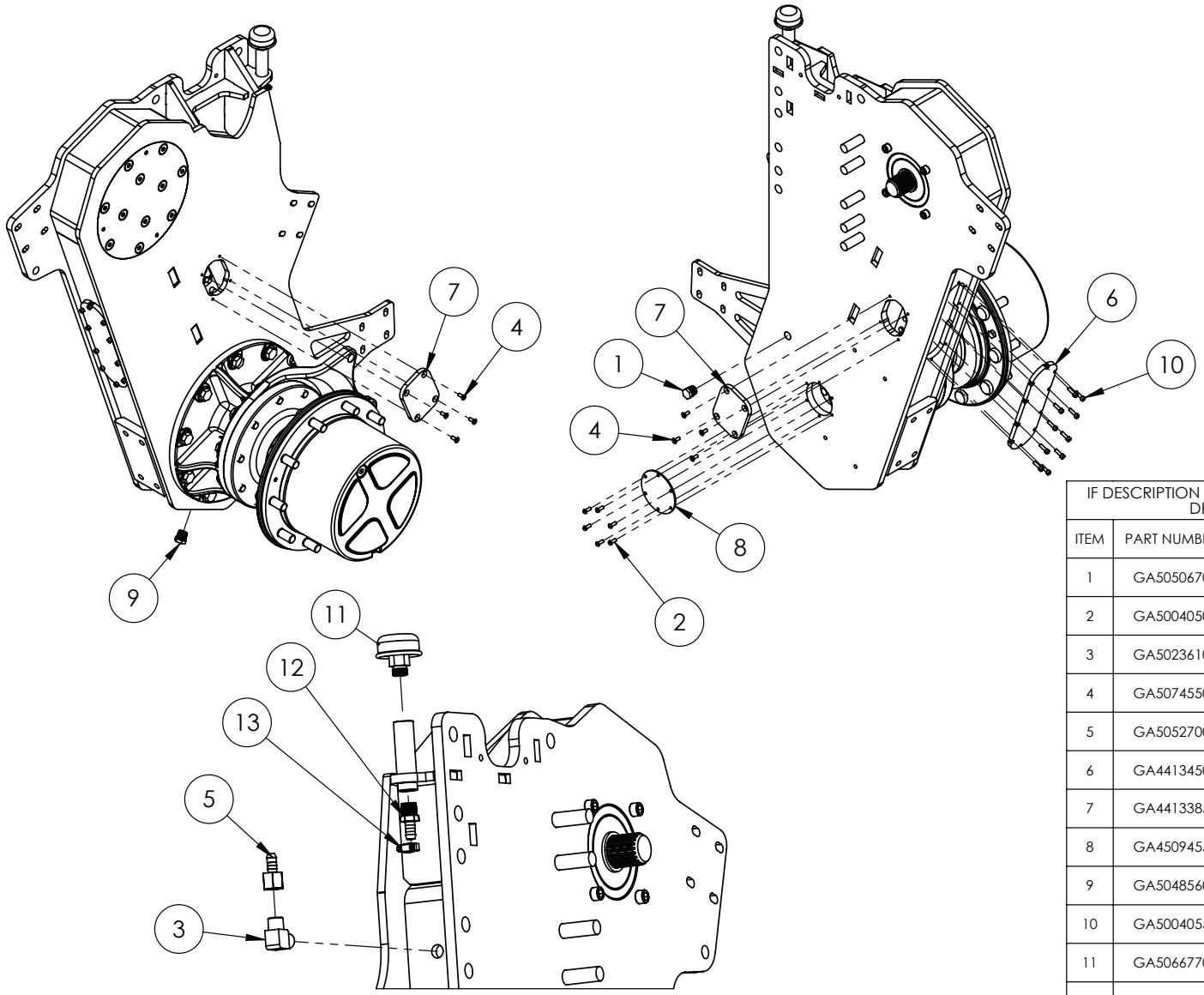

IF DESCRIPTION PREFIX IS ASSEMBLY DRAWING ONLY OR PRODUCTION DRAWING ONLY THE ITEM IS NOT FOR SALE			
ITEM	PART NUMBER	DESCRIPTION	QTY
1	GA5050670	1/2" BRASS PLUG	1
2	GA5004050	BHCS M6 X 16 SS A2-70	6
3	GA5023610	BRASS ELBOW 1/2 X 1/2 MALE THREAD	1
4	GA5074550	CSCS M6 X 16 - SS	8
5	GA5052700	HOSE BARB, 1/2" BSP FEMALE X 1/2" HOSE, BRASS	1
6	GA4413450	PLATE, CHAIN ACCESS COVER, G4 S2	1
7	GA4413385	PLATE, CHAIN ACCESS, G4 S2	2
8	GA4509455	PLATE, DROPLEG INSPECTION HOLE, LOWER, G3 G4	1
9	GA5048560	PLUG, MAGNETIC, 1/2" BSPT MALE	1
10	GA5004055	SHCS M6 X 20 GR12.9 ZP	10
11	GA5066770	AIR BREATHER SCREW IN STYLE 1/2"	1
12	GA5049350	HOSE BARB, 1/2" BSPT MALE X 1/2" HOSE, BRASS	1
13	GA5000469	HOSE CLAMP, 1/2" SS 12-20/9W3	1
GA4951895-02 GOLDACRES		DROP LEG, 2X4 AND 4X4 ASSEMLY LHS, REAR, G4 S2, MY24	REV 01

Rear Axle, 2WD & 4WD, Drop Leg Cover Plates, RH Side

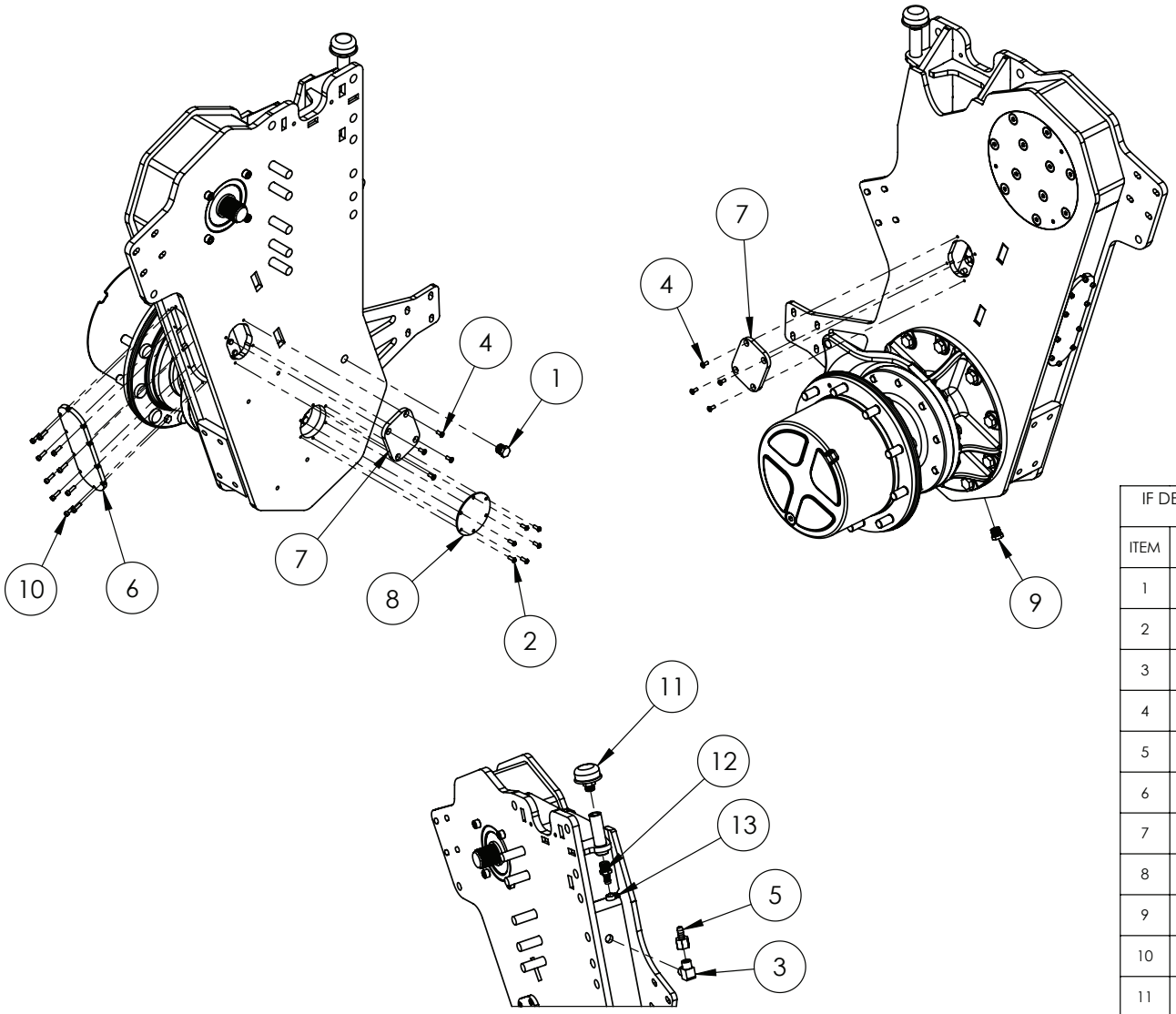

IF DESCRIPTION PREFIX IS ASSEMBLY DRAWING ONLY OR PRODUCTION DRAWING ONLY THE ITEM IS NOT FOR SALE			
ITEM	PART NUMBER	DESCRIPTION	QTY
1	GA5050670	1/2" BRASS PLUG	1
2	GA5004050	BHCS M6 X 16 SS A2-70	6
3	GA5023610	BRASS ELBOW 1/2 X 1/2 MALE THREAD	1
4	GA5074550	CSCS M6 X 16 - SS	8
5	GA5052700	HOSE BARB, 1/2" BSP FEMALE X 1/2" HOSE, BRASS	1
6	GA4413450	PLATE, CHAIN ACCESS COVER, G4 S2	1
7	GA4413385	PLATE, CHAIN ACCESS, G4 S2	2
8	GA4509455	PLATE, DROPLEG INSPECTION HOLE, LOWER, G3 G4	1
9	GA5048560	PLUG, MAGNETIC, 1/2" BSPT MALE	1
10	GA5004055	SHCS M6 X 20 GR12.9 ZP	10
11	GA5066770	AIR BREATHER SCREW IN STYLE 1/2"	1
12	GA5049350	HOSE BARB, 1/2" BSPT MALE X 1/2" HOSE, BRASS	1
13	GA5000469	HOSE CLAMP, 1/2" SS 12-20/9W3	1
GA4951900-02 GOLDACRES		DROP LEG, 2X4 AND 4X4 ASSEMLY RHS, REAR, G4 S2, MY24	REV 01

Rear Axle, 2WD & 4WD, Drop Leg, Internal Drive Assembly, LH Side

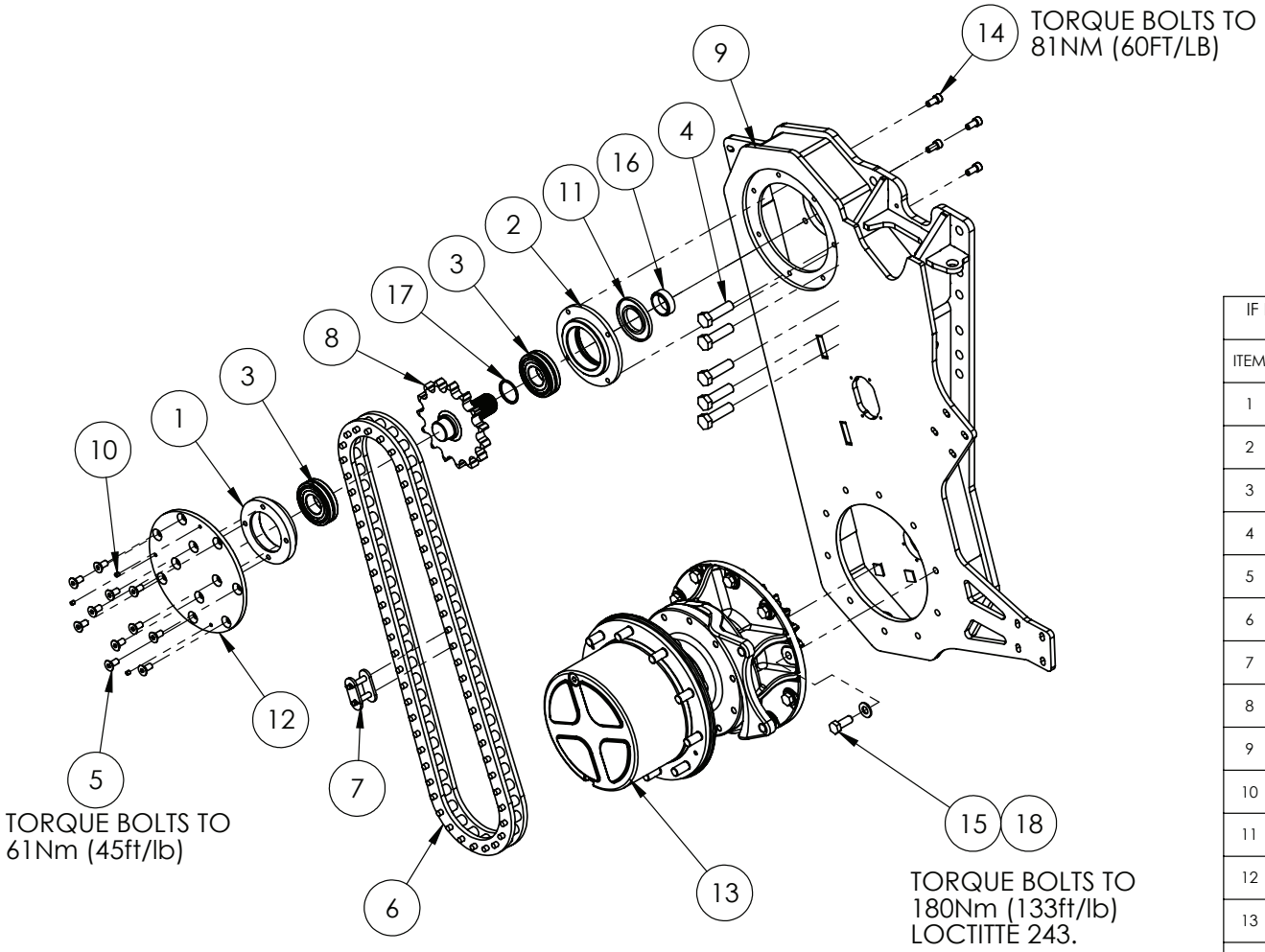

IF DESCRIPTION PREFIX IS ASSEMBLY DRAWING ONLY OR PRODUCTION DRAWING ONLY THE ITEM IS NOT FOR SALE			
ITEM	PART NUMBER	DESCRIPTION	QTY
1	GA4583545	BEARING HOLDER 45mm G3 G4	1
2	GA4552060	BEARING HOLDER - TOP INSIDE 45mm	1
3	GA5048275	BEARING, SPHERICAL ROLLER, SELF ALIGNING, 45 ID X 100 OD X 25 THICK, 21309E	2
4	GA0500094	BOLT, M20 X 1.5P X 70, GR 8.8, ZP	5
5	GA5000289	CSCS M12 X 25 GR12.9 ZP	11
6	GA5075260	CHAIN, 120HT, G3 G4 SERIES, 120HT1N58P	1
7	GA5007373	CONNECTING LINK, CHAIN JOINING LINK, 120HT, TSUBAKI	1
8	GA4583535	DRIVE SPROCKET AND SHAFT ASSY, DROP LEG, G4 S2	1
9	GA4604250	DROP LEG HOUSING, LHS, REAR, G4 S2	1
10	GA5078647	GRUB SCREW, M8X8	3
11	GA5070195	OIL SEAL 100X55X8	1
12	GA4413395	PLATE, SPROCKET COVER, RECESSED, 15 TOOTH SPROCKET, G4 S2	1
13	GA4951905	PRODUCTION DRAWING ONLY. PLANETARY MOUNTING ASSY, G4 S2 MY24	1
14	GA5000297	SHCS M12 X 25 GR12.9 ZP	4
15	GA5011287	SET SCREW M16 X 40 GR 8.8 ZP	10
16	DL30	SPACER RING, SP DROP LEG DIFF OUTPUT SHAFT	1
17	GA4583540	SPACER, DRIVE SPROCKET, G4 S2	1
18	GA5001043	WASHER 16mm FLAT SS HD	10
GA4951895-01 GOLDACRES		DROP LEG, 2X4 AND 4X4 ASSEMLY LHS, REAR, G4 S2, MY24	REV

Rear Axle, 2WD & 4WD, Drop Leg, Internal Drive Assembly, RH Side

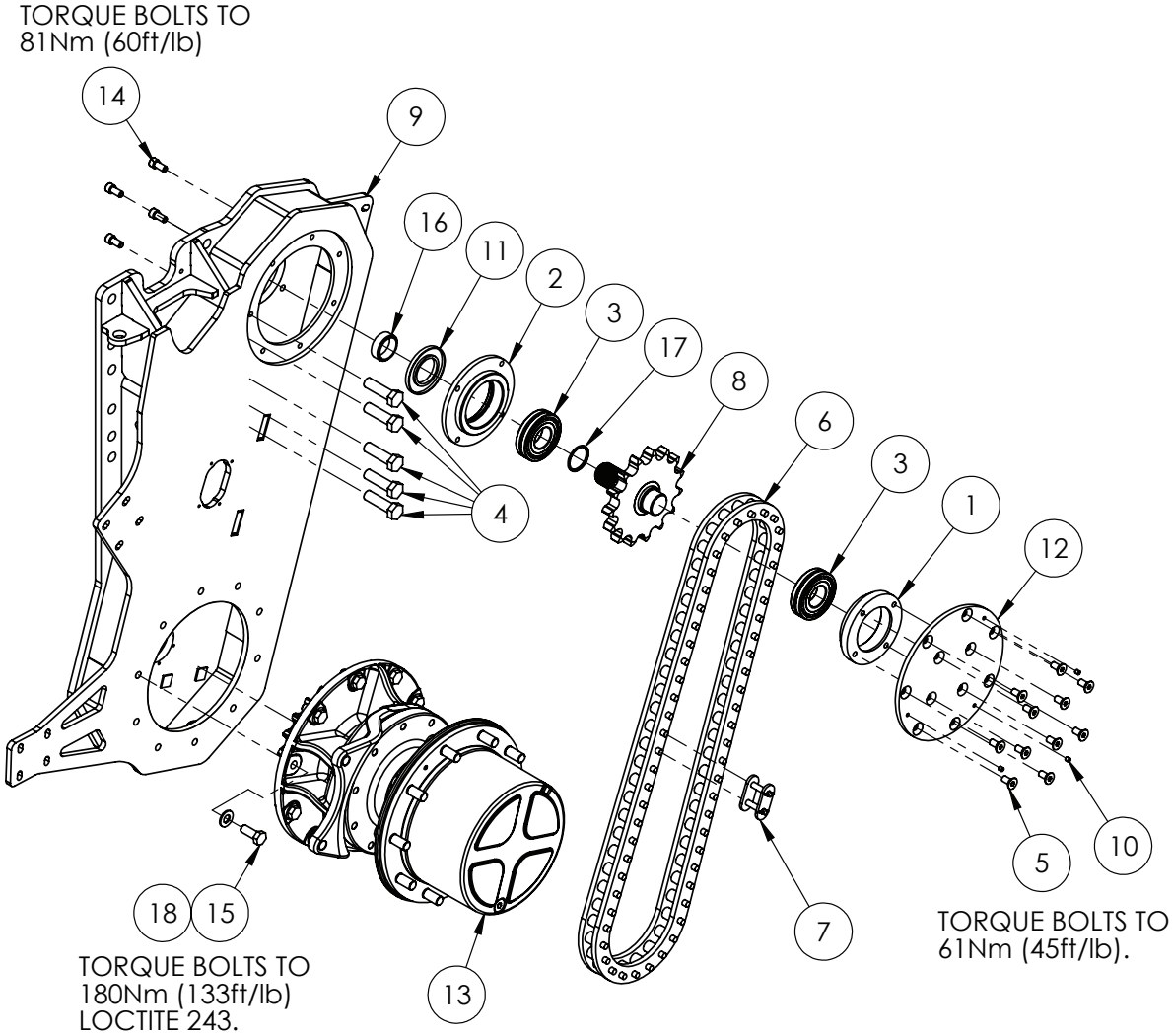

IF DESCRIPTION PREFIX IS ASSEMBLY DRAWING ONLY OR PRODUCTION DRAWING ONLY THE ITEM IS NOT FOR SALE			
ITEM	PART NUMBER	DESCRIPTION	QTY
1	GA4583545	BEARING HOLDER 45mm G3 G4	1
2	GA4552060	BEARING HOLDER - TOP INSIDE 45mm	1
3	GA5048275	BEARING, SPHERICAL ROLLER, SELF ALIGNING, 45 ID X 100 OD X 25 THICK, 21309E	2
4	GA0500094	BOLT, M20 X 1.5P X 70, GR 8.8, ZP	5
5	GA5000289	CSCS M12 X 25 GR12.9 ZP	11
6	GA5075260	CHAIN, 120HT, G3 G4 SERIES, 120HT1N58P	1
7	GA5007373	CONNECTING LINK, CHAIN JOINING LINK, 120HT, TSUBAKI	1
8	GA4583535	DRIVE SPROCKET AND SHAFT ASSY, DROP LEG, G4 S2	1
9	GA4604255	DROP LEG HOUSING, RHS, REAR, G4 S2	1
10	GA5078647	GRUB SCREW, M8X8	3
11	GA5070195	OIL SEAL 100X55X8	1
12	GA4413395	PLATE, SPROCKET COVER, RECESSED, 15 TOOTH SPROCKET, G4 S2	1
13	GA4951905	PRODUCTION DRAWING ONLY. PLANETARY MOUNTING ASSY, G4 S2 MY24	1
14	GA5000297	SHCS M12 X 25 GR12.9 ZP	4
15	GA5011287	SET SCREW M16 X 40 GR 8.8 ZP	10
16	DL30	SPACER RING, SP DROP LEG DIFF OUTPUT SHAFT	1
17	GA4583540	SPACER, DRIVE SPROCKET, G4 S2	1
18	GA5001043	WASHER 16mm FLAT SS HD	10
GA4951900-01 GOLDACRES		DROP LEG, 2X4 AND 4X4 ASSEMLY RHS, REAR, G4 S2, MY24	REV 00

Planetary Hub, JCB

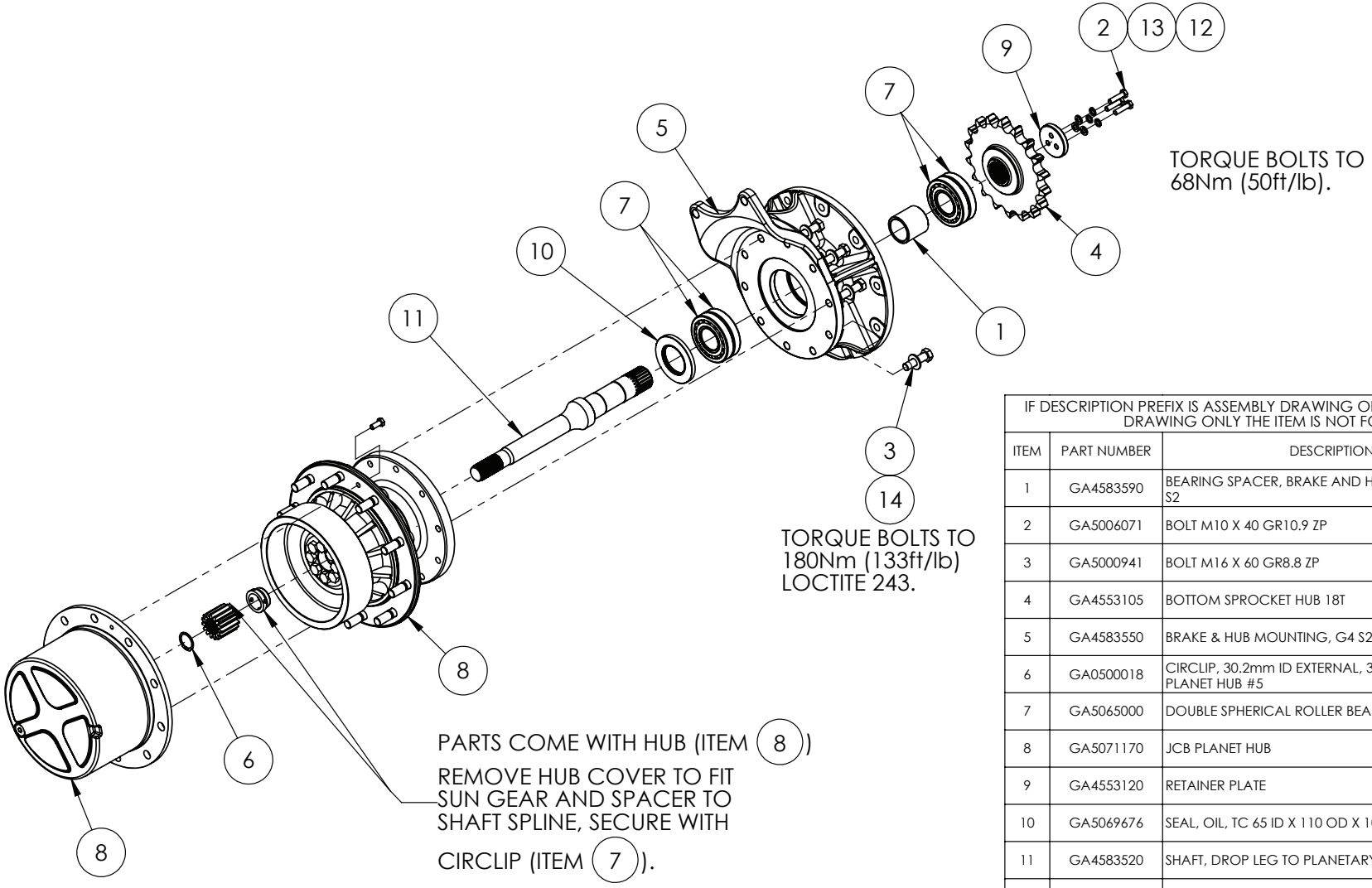

IF DESCRIPTION PREFIX IS ASSEMBLY DRAWING ONLY OR PRODUCTION DRAWING ONLY THE ITEM IS NOT FOR SALE			
ITEM	PART NUMBER	DESCRIPTION	QTY
1	GA4583590	BEARING SPACER, BRAKE AND HUB MOUNTING, G4 S2	1
2	GA5006071	BOLT M10 X 40 GR10.9 ZP	3
3	GA5000941	BOLT M16 X 60 GR8.8 ZP	10
4	GA4553105	BOTTOM SPROCKET HUB 18T	1
5	GA4583550	BRAKE & HUB MOUNTING, G4 S2.	1
6	GA0500018	CIRCLIP, 30.2mm ID EXTERNAL, 36.2OD, JCB PLANET HUB #5	1
7	GA5065000	DOUBLE SPHERICAL ROLLER BEARING 22310	2
8	GA5071170	JCB PLANET HUB	1
9	GA4553120	RETAINER PLATE	1
10	GA5069676	SEAL, OIL, TC 65 ID X 110 OD X 10, VITON	1
11	GA4583520	SHAFT, DROP LEG TO PLANETARY HUB, G4 S2	1
12	GA5000117	WASHER 10mm FLAT SS HD	3
13	GA5000137	WASHER 10mm SPRING SS	3
14	GA5001043	WASHER 16mm FLAT SS HD	10
GA4951905 GOLDACRES		PRODUCTION DRAWING ONLY. PLANETARY MOUNTING ASSY, G4 S2 MY24	REV 01.C

Rear Axle, Driveshaft Assembly, Dromos

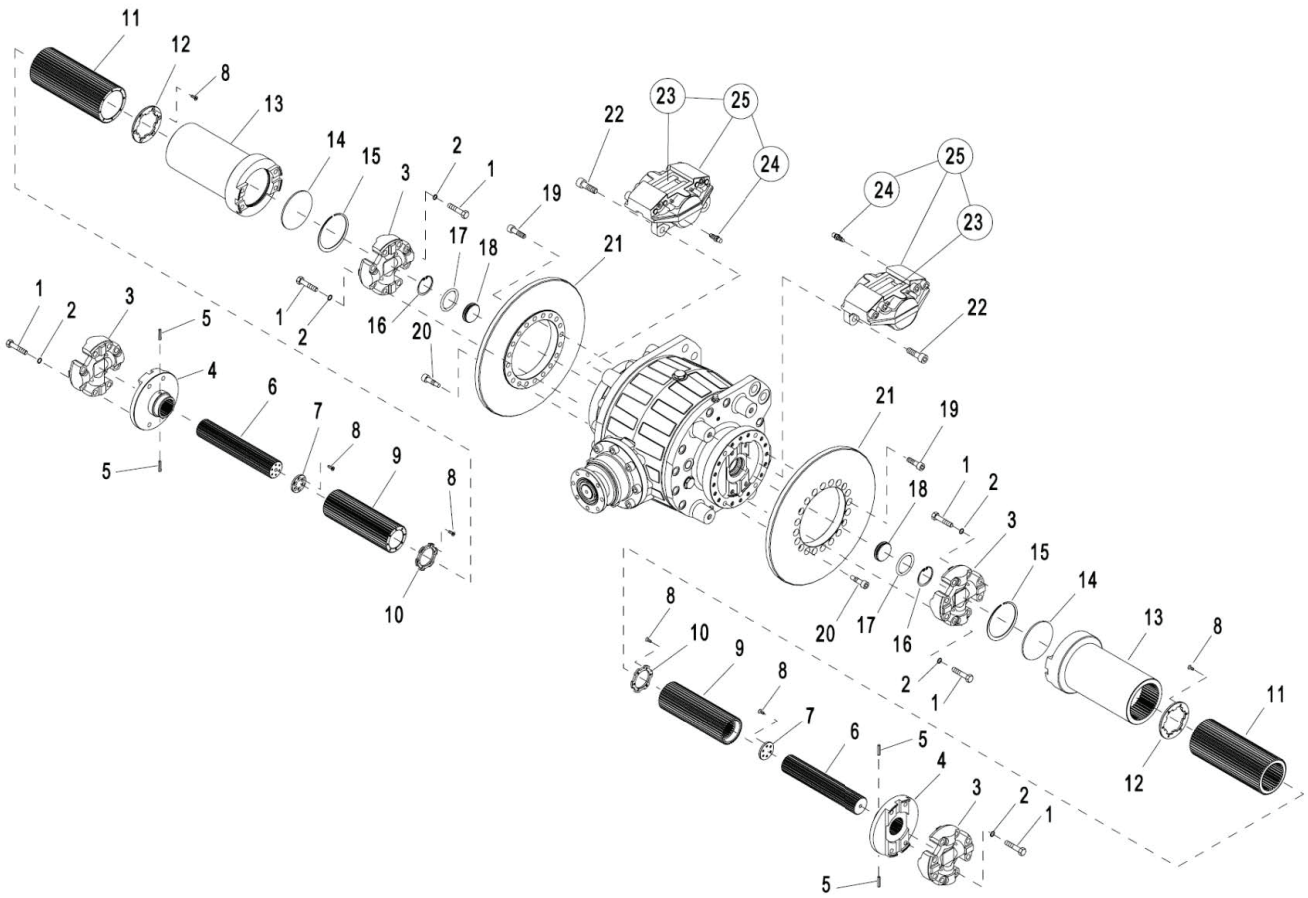

IF DESCRIPTION PREFIX IS ASSEMBLY DRAWING ONLY OR PRODUCTION DRAWING ONLY THE ITEM IS NOT FOR SALE			
ITEM	PART NUMBER	DESCRIPTION	QTY
1	GA5079090	SHCS, 1/2 X 20mm UNF X 2 1/4", ANSI BI 18.2.1 GR8 10.9	24
2	GA5078864	NOTCHED WASHER, SUIT, DROMOS, DRIVESHAFT ASSEMBLY	24
3	GA5055885	UNI CROSS, REAR, ADJUSTABLE AXLE, G3 G4, DROMOS	4
4	GA5055890	OUTPUT FLANGE, DRIVESHAFT END, REAR, ADJUSTABLE AXLE, G3 G4, DROMOS	2
5	GA5055915	SPIRAL DOWEL PIN, M6 X 30 DIN 7344, ADJUSTABLE DRIVE SHAFT, G3 G4, DROMOS	4
6	GA4550475	SPLINED SHAFT, 2-3m INNER, G3 G4, DROMOS	2
7	GA5055900	PLATE, INNER SPLINE RETAINER, ADJUSTABLE DRIVE SHAFT, G3 G4, DROMOS	2
8	GA5025725	SCREW, SUIT, LOCK WASHER, DROMOS	36
9	GA5055905	DRIVESHAFT, SPLINED EXTENSION SLEEVE, INNERMOST, ADJUSTABLE DRIVE SHAFT, G3 G4, DROMOS	2
10	GA5078865	LOCK WASHER, SUIT, DROMOS, DRIVESHAFT ASSEMBLY	2
11	GA5055910	DRIVESHAFT, SPLINED EXTENSION SLEEVE, MIDDLE, ADJUSTABLE DRIVE SHAFT, G3 G4, DROMOS	2
12	GA5078862	LOCK WASHER, SUIT, DROMOS AXLE, DRIVESHAFT ASSEMBLY	2
13	GA5025730	SLEEVE, DIFFERENTIAL, SUIT, DROMOS	2
14	GA5025735	COVER, SLEEVE, SUIT, DROMOS, DIFFERENTIAL	2
15	GA5078884	CIRCLIP, INTERNAL END COVER, 2-3m DRIVE SHAFT	2
16	GA5079092	CIRCLIP, RETAINING RING, DROMOS	2
17	GA5079093	O-RING, TORQUE JOINT, SUIT, DROMOS, DRIVESHAFT	2
18	GA5079094	COVER, O-RING/CIRCLIP, DROMOS	2
19	GA5078867	CAP SCREW M12X40 UNI 5931 12.9, EX. SKT. HD	32
20	GA5078868	CAP SCREW / SCHOULDER DIAM.12 H8 -M10X25, HEX. SKT. HD	8
21	GA5055875	BRAKE DISC, REAR, ADJUSTABLE AXLE, G3 G4, DROMOS	2
22	GA5078869	HEXAGON SOCKET HEAD CAP SCREW M16X45 GR12.9	4
23	GA5055880	BRAKE PAD KIT, 2 PADS ONLY, REAR, ADJUSTABLE AXLE, SUITS DROMOS AND JCB BRAKE CALIPER G3 G4	2
24	GA5073310	BLEEDER VALVE, M10X1, BRAKE CALIPER, STILFRENI	2
25	GA5055895	BRAKE CALIPER, REAR, ADJUSTABLE AXLE, G3 G4, DROMOS	2
GA7800236 GOLDACRES		DIFFERENTIAL, WITH ADJUSTABLE DRIVE SHAFTS AND BRAKES FITTED SUIT 2-3m, DROMOS	REV

Rear Axle, Differential Assembly, Dromos

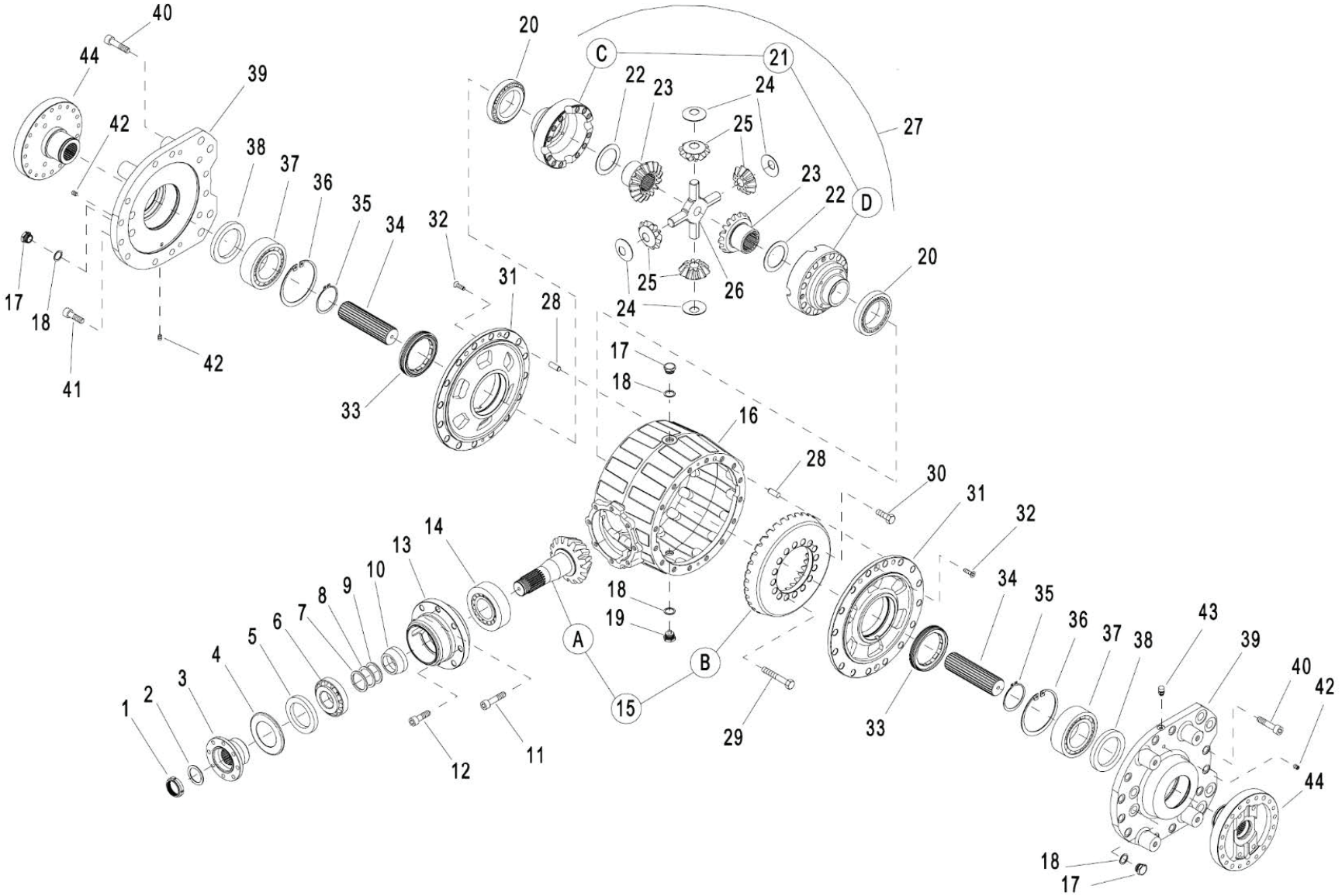

CONTINUE OVER PAGE

GA7800237 GOLDACRES	DIFFERENTIAL ASSEMBLY, REAR AXLE, DROMOS	REV

Rear Axle, Differential Assembly, Dromos, Parts List

IF DESCRIPTION PREFIX IS ASSEMBLY DRAWING ONLY OR PRODUCTION DRAWING ONLY THE ITEM IS NOT FOR SALE			
ITEM	PART NUMBER	DESCRIPTION	QTY
1	GA5078475	RING NUT, SUIT, DROMOS, DIFFERENTIAL	
2	GA5078476	THRUST WASHER, 40X60X1 mm, DROMOS DIFF, G4 ADJUSTABLE AXLE	1
3	GA5078477	INPUT FLANGE, DROMOS DIFF, G4 ADJUSTABLE AXLE	1
4	GA5078478	OIL SEAL, INPUT FLANGE, DROMOS DIFF, G4 ADJUSTABLE AXLE	1
5	GA5018907	SEAL, 70 ID X 100 OD X 10 mm	1
6	GA5078479	TAPERED BEARING SMALL, INPUT SHAFT, DROMOS DIFF, G4 ADJUSTABLE AXLE	1
7	GA5078480	SHIM, INPUT SHAFT, TOP, DROMOS DIFF, G4 ADJUSTABLE AXLE	2
8	GA5078481	SHIM, INPUT SHAFT, MIDDLE, DROMOS DIFF, G4 ADJUSTABLE AXLE	4
9	GA5078482	SHIM, INPUT SHAFT, BOTTOM, DROMOS DIFF, G4 ADJUSTABLE AXLE	2
10	GA5078483	SPACER, INPUT SHAFT, DROMOS DIFF, G4 ADJUSTABLE AXLE	1
11	GA5079096	SHCS, M14 X 45mm, UNI 5931 12.9, DROMOS	6
12	GA5056090	CAP SCREW, SOCKET HEAD, HEXAGON, M14X40 UNI 5931 12.9, DROMOS	2
13	GA5079097	BEARING SUPPORT BUSH, SUIT, DROMOS, DIFFERENTIAL	1
14	GA5078484	TAPERED BEARING LARGE, INPUT SHAFT, DROMOS DIFF, G4 ADJUSTABLE AXLE	1
15	GA5078485	BEVEL GEAR & PINION, DROMOS DIFF, G4 ADJUSTABLE AXLE	1
16	GA5079098	CENTRAL CASING, SUIT, DROMOS, DIFFERENTIAL	1
17	GA5078486	FILL PLUG, M22 X 1.5, DROMOS	3
18	GA5073435	WASHER, COPPER GASKET, 22 X 28 X 1.5 mm, DROMOS	4
19	GA5073445	PLUG, DRAIN, MAGNETIC, M22 X 1.5, DROP LEG, G5 G6, DROMOS	1
20	GA5078487	TAPERED BEARING, DIFFERENTIAL UNIT, DROMOS DIFF, G4 ADJUSTABLE AXLE	2
21	GA5079099	DIFFERENTIAL ASSEMBLY UNIT, DROMOS	1
22	GA5079100	SUPPORT RING, CROWN WHEEL, DROMOS	2

IF DESCRIPTION PREFIX IS ASSEMBLY DRAWING ONLY OR PRODUCTION DRAWING ONLY THE ITEM IS NOT FOR SALE			
ITEM	PART NUMBER	DESCRIPTION	QTY
23	GA5079086	BEVEL, PLANETARY GEAR, DROMOS	1
24	GA5079091	SUPPORT RING, PLANETARY, DIFFERENTIAL, DROMOS	4
25	GA5079101	PLANETARY GEAR, SUIT, DROMOS, DIFFERENTIAL	4
26	GA5079102	CROSS, SPIDER GEAR, SUIT, DROMOS, DIFFERENTIAL	1
27	GA5078488	DIFFERENTIAL UNIT, DROMOS DIFF, G4 ADJUSTABLE AXLE	1
28	GA5079103	PIN, PARALLEL, SUIT, DROMOS, DIFFERENTIAL	2
29	GA5079104	HEXAGON HEAD CAP SCREW M16X1.5X100 UNI 5738 10.9	12
30	GA5079105	HEXAGON HEAD CAP SCREW M16X1.5X45 UNI 5740 10.9	4
31	GA5079106	DIFFERENTIAL SUPPORT, DROMOS	2
32	GA0500060	HEX SOCKET COUNTERSUNK FLAT HEAD CAP SCREW M8X25 UNI 593310.9	2
33	GA5078489	RING NUT, DROMOS DIFF, G4 ADJUSTABLE AXLE	2
34	GA5078490	DRIVE SHAFT, OUTPUT, DROMOS DIFF, G4 ADJUSTABLE AXLE	2
35	GA5079107	CIRCLIP, RETAINING RIN, SUIT, DROMOS, DIFFERENTIAL	2
36	GA5079108	CIRCLIP, RETAINING RIN, SUIT, DROMOS, DIFFERENTIAL	2
37	GA5078491	BEARING, DOUBLE ROW, ANGULAR CONTACT, DROMOS DIFF, G4 ADJUSTABLE AXLE	2
38	GA5078492	OIL SEAL, 80X110X10 mm, DROMOS DIFF, G4 ADJUSTABLE AXLE	2
39	GA5079109	SUPPORT PLATE, DOROMOS, DIFFERENTIAL	2
40	GA5079110	HEXAGON HEAD CAP SCREW M16X60XUNI 5931 12.9, DROMOS	1
41	GA5078869	HEXAGON SOCKET HEAD CAP SCREW M16X45 GR12.9	3
42	GA5056220	CONICAL PLUG, HEXAGON SOCKET, HEAD CAP, M10X1, DIN 906 5.8, DROMOS	1
43	GA5079111	CONICAL BREATHER PLUG, DROMOS	2
44	GA5079112	FLANGE ,TRANSMISSION, SUIT, DROMOS, DIFFERENTIAL	1

GA7800237 GOLDACRES	DIFFERENTIAL ASSEMBLY, REAR AXLE, DROMOS	REV

Rear Axle, Differential Assembly, JCB

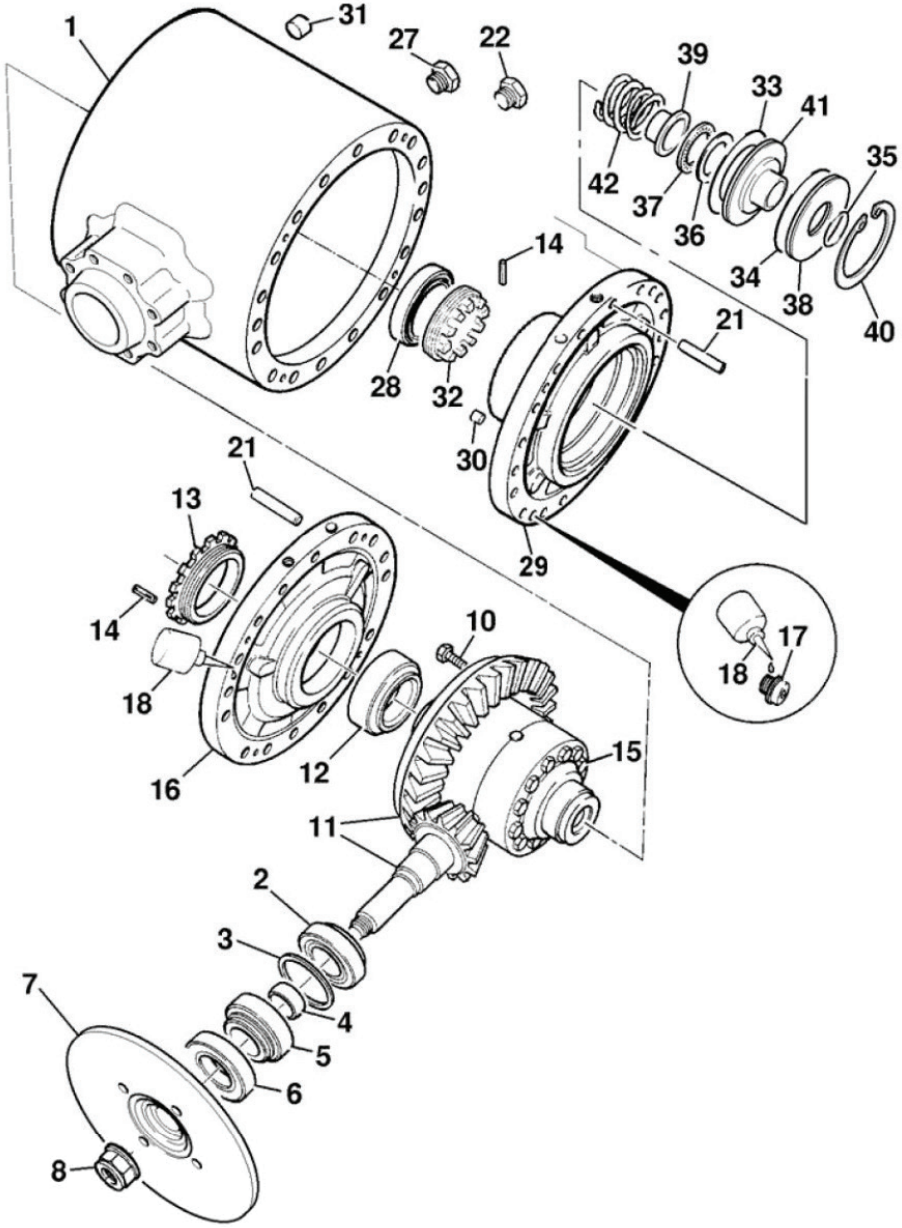

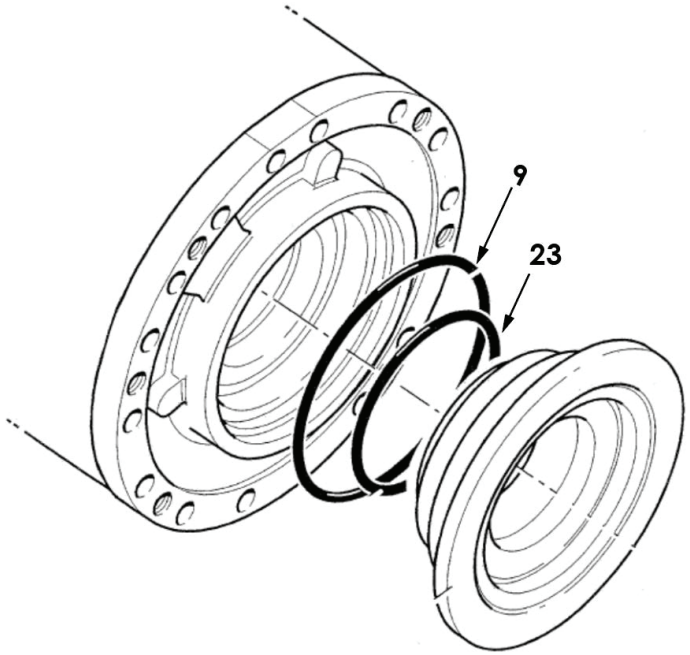

CONTINUE OVER PAGE

GA7800238 GOLDACRES	DIFF CENTRE, 3.364:1 RATIO, SOFT ENGAGE DIFF, G3 G4, JCB	REV

Rear Axle, Differential Assembly, JCB, Parts List

IF DESCRIPTION PREFIX IS ASSEMBLY DRAWING ONLY OR PRODUCTION DRAWING ONLY THE ITEM IS NOT FOR SALE			
ITEM	PART NUMBER	DESCRIPTION	QTY
-	GA5071175	DIFF CENTRE, 3.364:1 RATIO, SOFT ENGAGE DIFF, G3 G4, JCB	1
1	GA5079064	CASING, DRIVEHEAD, SOFT ENGAGE, DIFFLOCK, SUIT, JCB DIFFERENTIAL	1
2	GA5079031	BEARING ROLLER, SUIT, JCB DIFFERENTIAL	1
3	GA5079032	KIT, SHIM, SUIT JCB DIFFERENTIAL	1
4	GA5079033	KIT SET OF SPACERS FROM 12.625 TO 14.200 THICK	1
5	GA5079034	BEARING, TAPER ROLLER, SUIT, JCB DIFFERENTIAL	1
6	GA2700031	SEAL, INPUT PINION SHAFT, JCB DIFF, G3 G4	1
7	-	NOT USED	-
8	GA5079036	NUT, STAKE, M30 X 2, SUIT, JCB DIFFERENTIAL	1
9	GA5079065	SEAL, BRAKE PISTON, SUIT, JCB DIFFERENTIAL	2
10	GA5079037	BOLT, FLANGED, M12 X 60mm, SUIT, JCB DIFFERENTIAL	20
11	GA5079038	CROWN WHEEL & PINION, 11/37, SUIT, JCB, DIFFERENTIAL	1
12	GA5079039	BEARING, TAPERED ROLLER SUIT, JCB DIFFERENTIAL	1
13	GA5079040	NUT, SIDE DIFF, SUIT, JCB DIFFERENTIAL	1
14	GA5079041	PIN, TENSION, SUIT, JCB DIFFERENTIAL	2
15	GA5079042	DIFFERENTIAL ASSEMBLY, JCB	1
16	GA5079043	BRAKE PISTON HOUSING, SUIT, JCB DIFFERENTIAL	1
17	GA5079044	CAP SCREW, M10X25, SUIT, JCB DIFFERENTIAL	8
18	GA5079045	SEALANT, JCB PARTS	-

IF DESCRIPTION PREFIX IS ASSEMBLY DRAWING ONLY OR PRODUCTION DRAWING ONLY THE ITEM IS NOT FOR SALE			
ITEM	PART NUMBER	DESCRIPTION	QTY
21	GA5079046	DOWEL, SUIT, JCB DIFFERENTIAL	4
22	GA5079047	PLUG, TAPERED, 3/4" SUIT, JCB DIFFERENTIAL	1
23	GA5079066	SEAL, BRAKE PISTON, SQUARE, SUIT, JCB DIFFERENTIAL	2
27	GA5079048	PLUG, TAPERED, 3/4", SUIT, JCB DIFFERENTIAL	1
28	GA5079049	BEARING, TAPERED, ROLLER, SUIT, JCB DIFFERENTIAL	1
29	GA5079050	HOUSING, BRAKE PISTON, PD70 S-ENG/DIFF, JCB	1
30	GA5079051	PLUG, 1/8", TAPERED, SUIT, JCB DIFFERENTIAL	1
31	GA5079052	PLUG, 1/4", SUIT, JCB DIFFERENTIAL	2
32	GA5079053	NUT, ADJUSTING, SUIT, JCB DIFFERENTIAL	1
33	GA5079054	O-RING, SUIT, JCB DIFFERENTIAL	1
34	GA5079055	O-RING, SUIT, JCB DIFFERENTIAL	1
35	GA5079056	O-RING, SUIT, JCB DIFFERENTIAL	1
36	GA5079057	THRUST WASHER, SUIT, JCB DIFFERENTIAL	1
37	GA5079058	BEARING, CYLINDRICAL ROLLER, JCB DIFFERENTIAL	1
38	GA5079059	END PLATE, SUIT, JCB DIFFERENTIAL	1
39	GA5079060	SLEEVE, THRUST, SUIT, JCB DIFFERENTIAL	1
40	GA5079061	CIRCLIP, SUIT, JCB DIFFERENTIAL	1
41	GA5079062	PISTON, SUIT, JCB DIFFERENTIAL	1
42	GA5079063	SPRING, SUIT, JCB DIFFERENTIAL	1

GA7800238 GOLDACRES	DIFF CENTRE, 3.364:1 RATIO, SOFT ENGAGE DIFF, G3 G4, JCB	REV

Planetary Hub, JCB

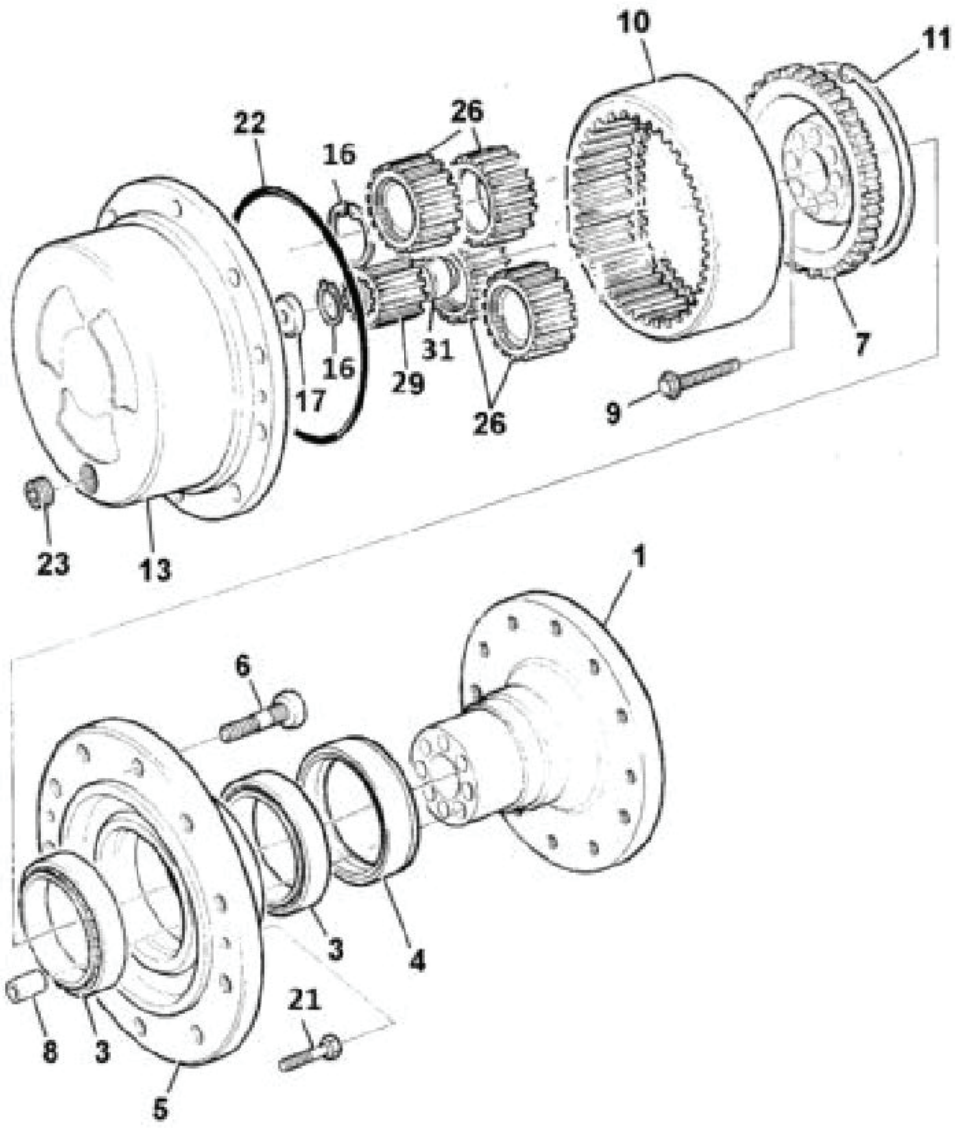

IF DESCRIPTION PREFIX IS ASSEMBLY DRAWING ONLY OR PRODUCTION DRAWING ONLY THE ITEM IS NOT FOR SALE			
ITEM	PART NUMBER	DESCRIPTION	QTY
1	GA5079071	STUB AXLE, JCB, PLANETARY HUB	1
3	GA5079072	BEARING ASSEMBLY, JCB, PLANETARY HUB, (2PACK)	2
4	GA5079073	SEAL, PLANETARY HUB, JCB	1
5	GA5079074	CARRIER WHEEL BEARING, JCB, PLANETARY HUB	1
6	GA5079075	WHEEL STUD, 3/4", UNFX82, JCB, PLANETARY HUB, PK10	10
7	GA5079076	CARRIER ANNULUS, JCB, PLANETARY HUB	1
8	GA5079077	DOWEL, SUIT, JCB, PLANETARY HUB, 8PK	8
9	GA5079078	BOLT, M14X70MM, SUIT, JCB, PLANETARY HUB, 8PK	8
10	GA5079079	GEAR ANNULUS RING, JCB, PLANETARY HUB	1
11	GA5079080	CIRCLIP, JCB, PLANETARY HUB	1
13	GA5079081	PLANETARY HUB, CARRIER, JCB	1
16	GA5079082	CIRCLIP, JCB, PLANETARY HUB	1
17	GA5079083	PAD, THRUST, JCB, PLANETARY HUB	1
21	GA5079084	BOLT, COATED, M10X25MM, SUIT, JCB, PLANETARY HUB, (2PK)	2
22	GA5079085	O-RING, JCB, PLANETARY HUB	1
23	GA5079047	PLUG, TAPERED, 3/4" SUIT, JCB DIFFERENTIAL	1
26	GA5079087	GEAR PLANET & BEARING, JCB, PLANETARY HUB, KIT, GEAR PLANET & BEARING, JCB, PLANETARY HUB	1
29	GA5079088	GEAR, SUN, JCB, PLANETARY HUB	1
31	GA5079089	SPACER, DRIVESHAFT, JCB, PLANETARY HUB	1
GA7800239 GOLDACRES		PLANETARY HUB, JCB, 2WD & 4WD	REV

Drive Shaft, 2WD, (Dromos Differential)

NOTE: 40077 OPTION

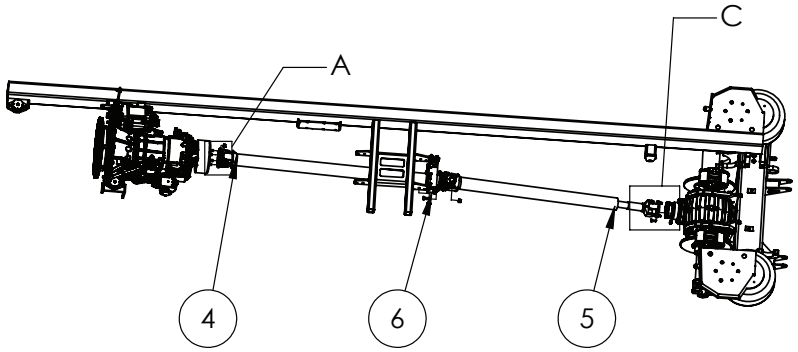

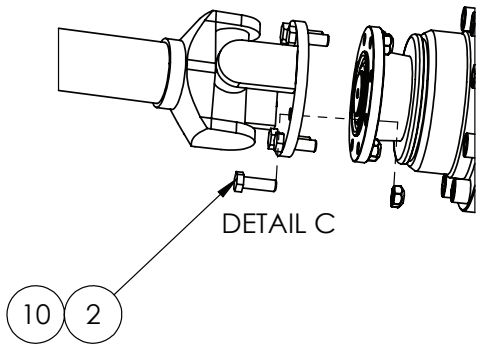

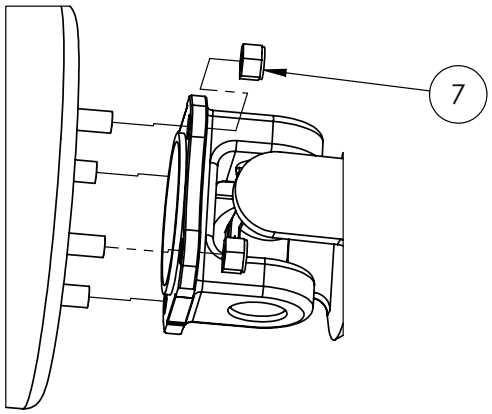

DETAIL A

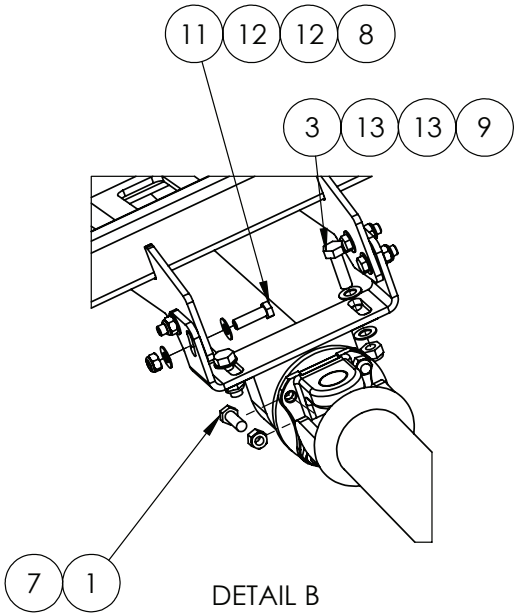

DETAIL B

IF DESCRIPTION PREFIX IS ASSEMBLY DRAWING ONLY OR PRODUCTION DRAWING ONLY THE ITEM IS NOT FOR SALE			
ITEM	PART NUMBER	DESCRIPTION	QTY
1	GA5009781	BOLT 1/2" UNF X 1 1/2" G8 ZP	4
2	GA5065455	BOLT M10 X 30 GR8.8 ZP	6
3	GA5000343	BOLT M14 X 45 GR8.8 ZP	2
4	GA2700150	DRIVE SHAFT, CENTRE BEARING SHAFT, 2WD, G4, S2	1
5	GA2700032	DRIVE SHAFT, CENTRE BEARING TO DIFF CENTRE, 2-3m DROMOS, G3 G4	1
6	GA4536225	MOUNT CENTRE BEARING PLATE	1
7	GA5049605	NUT 1/2 UNF NYLOC ZP	8
8	GA5012461	NUT M12 NYLOC ZP	4
9	GA5012427	NUT M14 NYLOC ZP	2
10	GA0500069	NUT, M10, CONELOCK, ZP	6
11	GA5000319	SET SCREW M12 X 40 GR8.8 ZP	4
12	GA5000577	WASHER 12mm FLAT SS HD	8
13	GA5050325	WASHER 14mm FLAT SS	5
GA7800218 GOLDACRES		ASSEMBLY DRAWING ONLY, 2WD ONLY, DRIVE SHAFTS, DROMO DIFF, G4 S2, MY24	REV 00

Drive Shaft, 2WD, (JCB Differential)

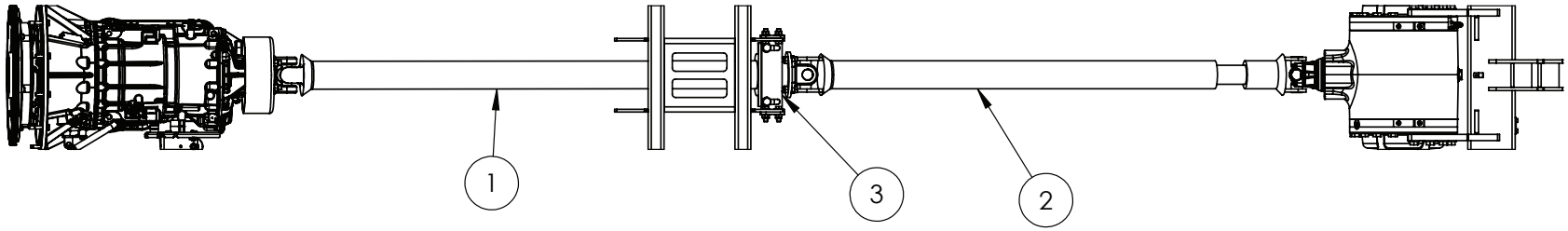

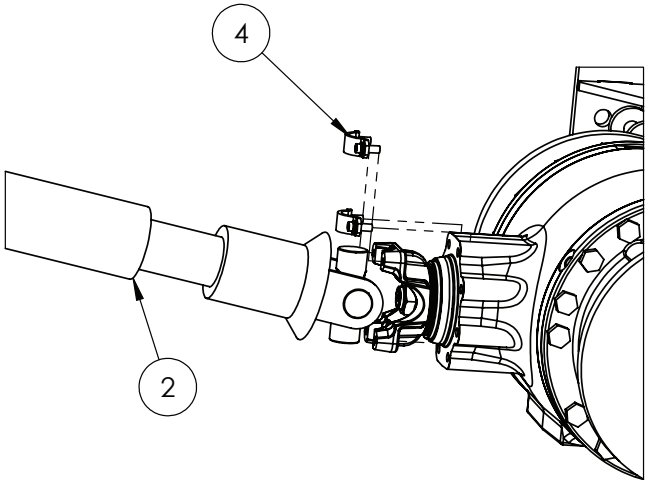

IF DESCRIPTION PREFIX IS ASSEMBLY DRAWING ONLY OR PRODUCTION DRAWING ONLY THE ITEM IS NOT FOR SALE			
ITEM	PART NUMBER	DESCRIPTION	QTY
1	GA2700150	DRIVE SHAFT, CENTRE BEARING SHAFT, 2WD, G4, S2	1
2	GA5070933	DRIVESHAFT, PROP SHAFT, ALLISON TRANSMISSION AND JCB DIFF, G3 G4 SERIES	1
3	GA4536225	MOUNT CENTRE BEARING PLATE	1
4	GA5072070	STRAP KIT SPL	1
GA7800223 GOLDACRES		ASSEMBLY DRAWING ONLY, 2WD ONLY, DRIVE SHAFTS, JCB DIFF, G4 S2, MY24	REV 00

Drive Shaft, Transmission to Centre Bearing, 2WD (JCB Differential)

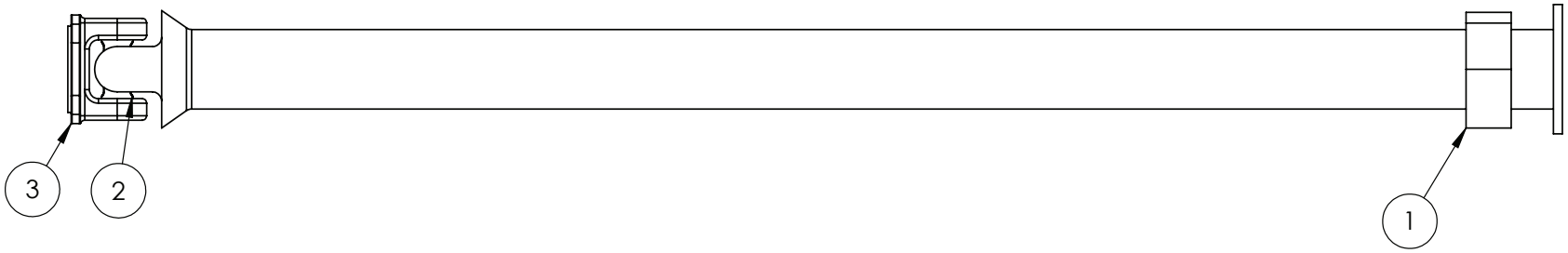

IF DESCRIPTION PREFIX IS ASSEMBLY DRAWING ONLY OR PRODUCTION DRAWING ONLY THE ITEM IS NOT FOR SALE			
ITEM	PART NUMBER	DESCRIPTION	QTY
1	GA5025845	BEARING, CENTRE, 40mm, SUIT, DRIVE SHAFT, 210391-1X	1
2	GA5025850	KIT, UNI JOINT, 1480 SERIES, HEAVY DUTY, 5-188XHD	1
3	GA5008779	YOKE, FLANGE, 1480 SERIES, 3-2-479, 77.55 X 92.42 RECTANGULAR 4 BOLT PATTERN	1
GA2700150 GOLDACRES		DRIVE SHAFT, CENTRE BEARING SHAFT, 2WD, G4, S2	REV 03

Drive Shaft, Transmission to JCB Differential

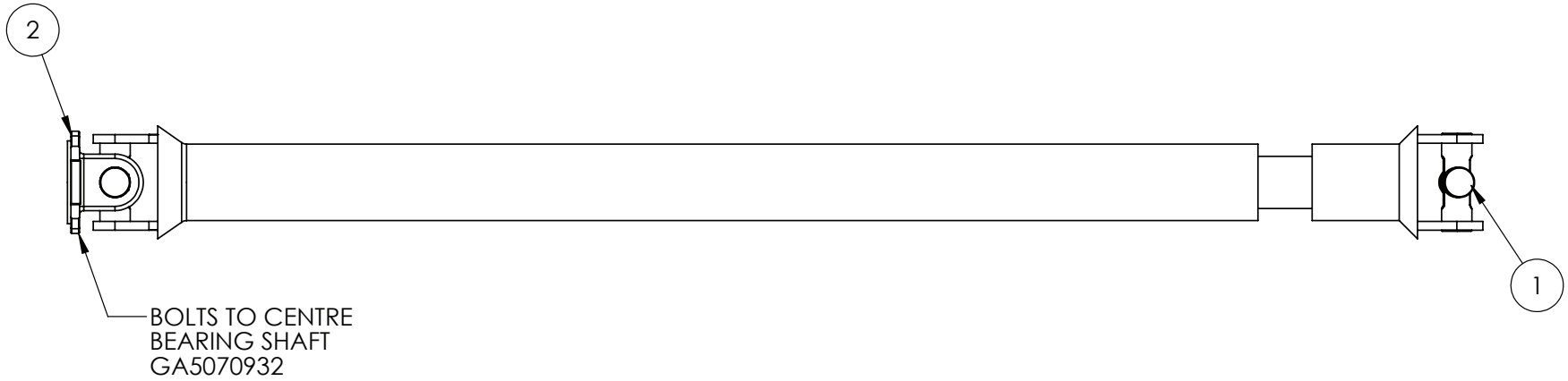

IF DESCRIPTION PREFIX IS ASSEMBLY DRAWING ONLY OR PRODUCTION DRAWING ONLY THE ITEM IS NOT FOR SALE			
ITEM	PART NUMBER	DESCRIPTION	QTY
1	GA5017113	UNI JOINT KIT 1480 SERIES	2
2	GA5008779	YOKE, FLANGE, 1480 SERIES, 3-2-479, 77.55 X 92.42 RECTANGULAR 4 BOLT PATTERN	1
GA5070933 GOLDACRES		DRIVESHAFT, PROP SHAFT, ALLISON TRANSMISSION AND JCB DIFF, G3 G4 SERIES	REV

Drive Shaft, 4WD, (JCB Differential)

NOTE: IF 40079 OPTIONED

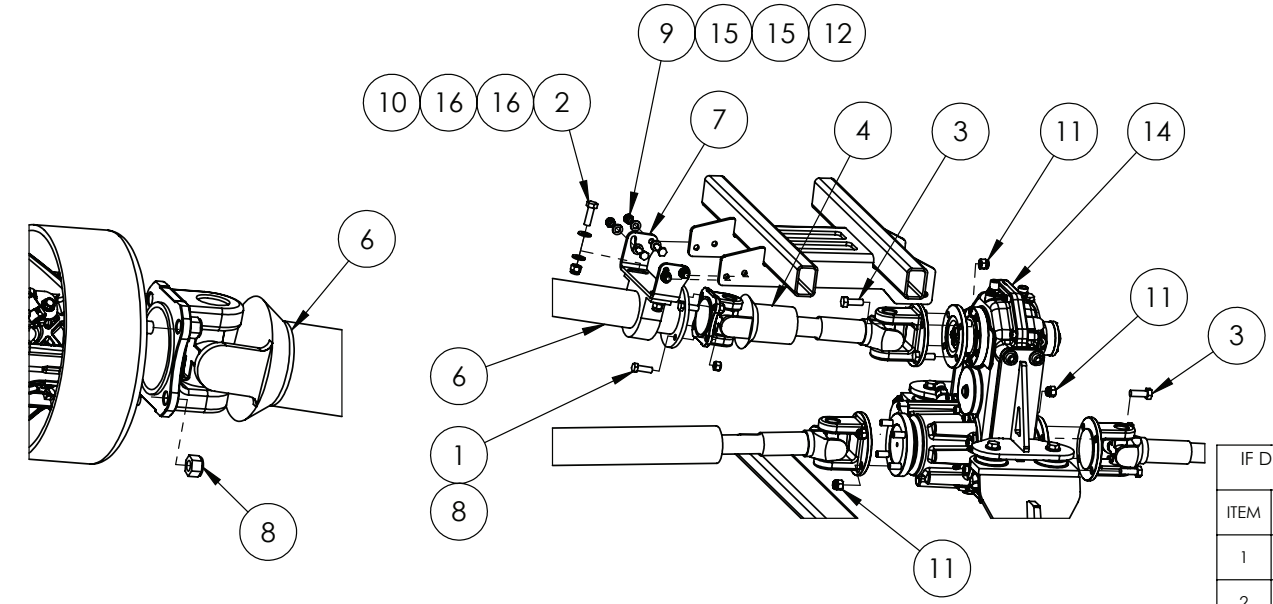

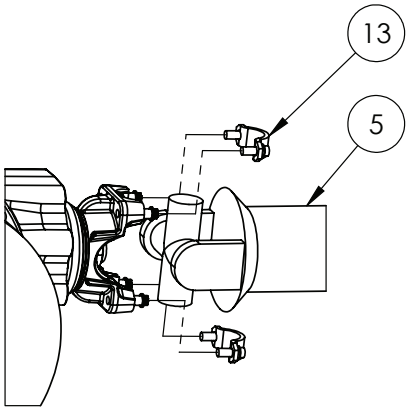

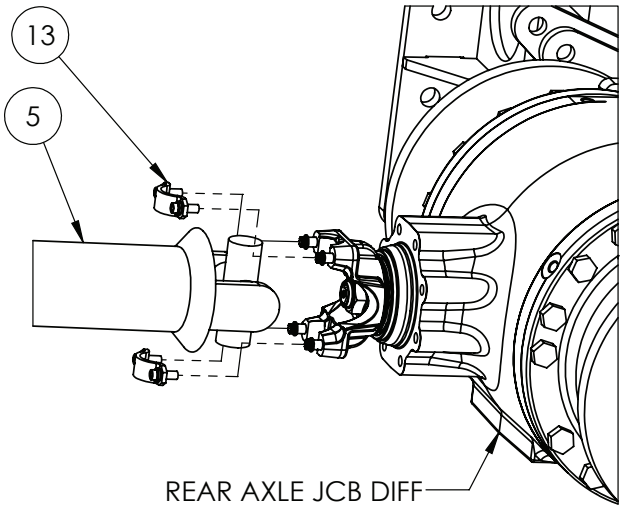

IF DESCRIPTION PREFIX IS ASSEMBLY DRAWING ONLY OR PRODUCTION DRAWING ONLY THE ITEM IS NOT FOR SALE			
ITEM	PART NUMBER	DESCRIPTION	QTY
1	GA5009781	BOLT 1/2" UNF X 1 1/2" G8 ZP	4
2	GA5000343	BOLT M14 X 45 GR8.8 ZP	2
3	GA0500076	BOLT M14X1.5 X 40 ZP GR10.9	8
4	GA2700181	DRIVE SHAFT, CENTRE BEARING TO TRANSFER CASE, 4WD, G3 G4	1
5	GA2700182	DRIVE SHAFT, TRANSFER CASE TO DIFF CENTRE, FRONT AND REAR, 4WD, G4 S2	2
6	GA2700149	DRIVE SHAFT, TRANSMISSION TO CENTRE BEARING, 4WD, G4, S2	1
7	GA4536225	MOUNT CENTRE BEARING PLATE	1
8	GA5049605	NUT 1/2 UNF NYLOC ZP	8
9	GA5012461	NUT M12 NYLOC ZP	4
10	GA5012427	NUT M14 NYLOC ZP	2
11	GA0500077	NUT M14X1.5 NYLOC ZP	12
12	GA5000319	SET SCREW M12 X 40 GR8.8 ZP	4
13	GA5072070	STRAP KIT SPL	2
14	GA4908505	TRANSFER CASE ASSEMBLY, G3 G4	1
15	GA5000577	WASHER 12mm FLAT SS HD	8
16	GA5066235	WASHER M14 FLAT ZP HT YELLOW	4
GA7800224 GOLDACRES		ASSEMBLY DRAWING ONLY, 4WD ONLY, DRIVE SHAFTS, JCB DIFF, G4 S2, MY24	REV 00.D

Drive Shaft, Centre Bearing to Transfer Case, 4WD

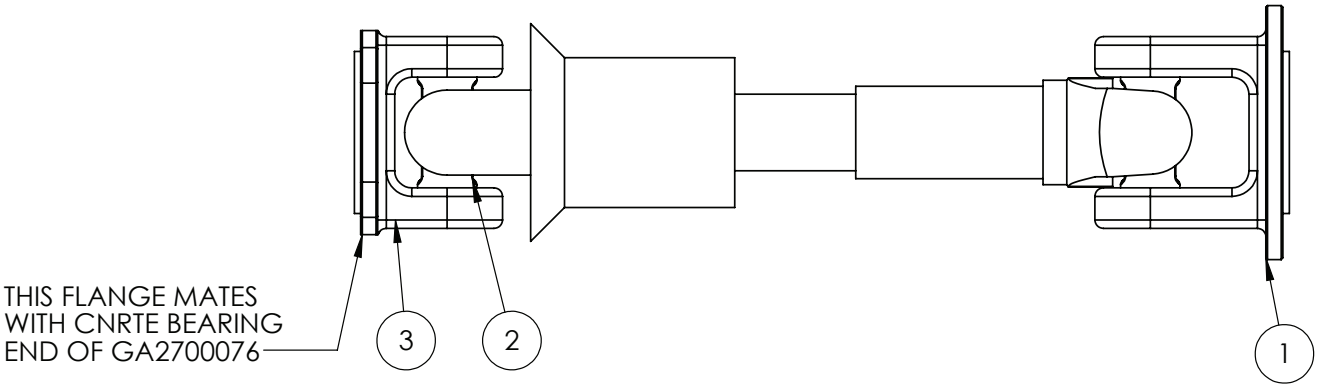

IF DESCRIPTION PREFIX IS ASSEMBLY DRAWING ONLY OR PRODUCTION DRAWING ONLY THE ITEM IS NOT FOR SALE			
ITEM	PART NUMBER	DESCRIPTION	QTY
1	GA5079229	YOKE, FLANGE, SAE 1500, (SAE 151) 14.25MM HOLES, 2-687-302400080	1
2	GA5025850	KIT, UNI JOINT, 1480 SERIES, HEAVY DUTY, 5-188XHD	2
3	GA5008779	YOKE, FLANGE, 1480 SERIES, 3-2-479, 77.55 X 92.42 RECTANGULAR 4 BOLT PATTERN	1
GA2700181 GOLDACRES		DRIVE SHAFT, CENTRE BEARING TO TRANSFER CASE, 4WD, G4 S2	REV 00

Drive Shaft, Transmission to Centre Bearing, 4WD

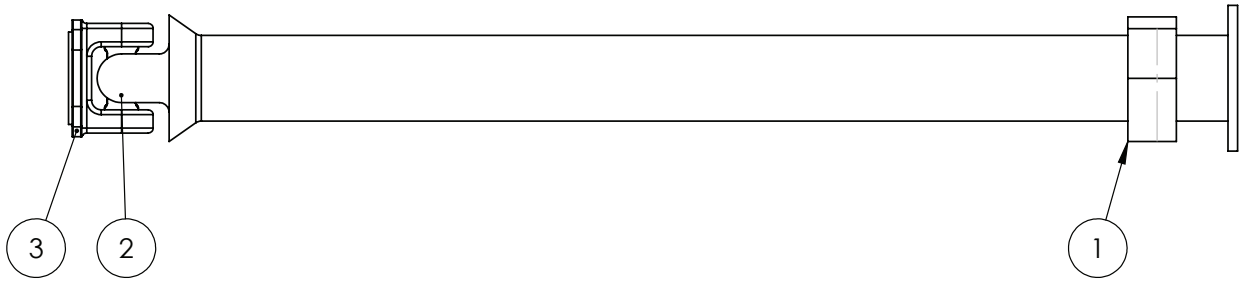

IF DESCRIPTION PREFIX IS ASSEMBLY DRAWING ONLY OR PRODUCTION DRAWING ONLY THE ITEM IS NOT FOR SALE			
ITEM	PART NUMBER	DESCRIPTION	QTY
1	GA5025845	BEARING, CENTRE, 40mm, SUIT, DRIVE SHAFT, 210391-1X	1
2	GA5025850	KIT, UNI JOINT, 1480 SERIES, HEAVY DUTY, 5-188XHD	1
3	GA5008779	YOKE, FLANGE, 1480 SERIES, 3-2-479, 77.55 X 92.42 RECTANGULAR 4 BOLT PATTERN	1
GA2700149 GOLDACRES		DRIVE SHAFT, TRANSMISSION TO CENTRE BEARING, 4WD, G4, S2	REV 00

Drive Shaft, Transfer Case to Diff Centre, Front, 4WD

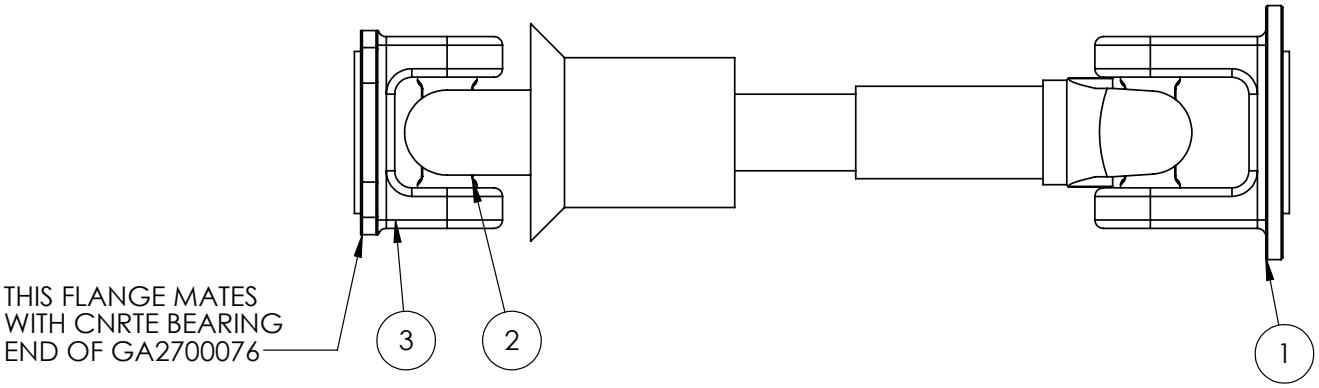

IF DESCRIPTION PREFIX IS ASSEMBLY DRAWING ONLY OR PRODUCTION DRAWING ONLY THE ITEM IS NOT FOR SALE			
ITEM	PART NUMBER	DESCRIPTION	QTY
1	GA5079229	YOKE, FLANGE, SAE 1500, (SAE 151) 14.25MM HOLES, 2-687-302400080	1
2	GA5025850	KIT, UNI JOINT, 1480 SERIES, HEAVY DUTY, 5-188XHD	2
3	GA5008779	YOKE, FLANGE, 1480 SERIES, 3-2-479, 77.55 X 92.42 RECTANGULAR 4 BOLT PATTERN	1
GA2700181 GOLDACRES		DRIVE SHAFT, CENTRE BEARING TO TRANSFER CASE, 4WD, G4 S2	REV 00

Transfer Case, Dromos, Upper Drive Assembly

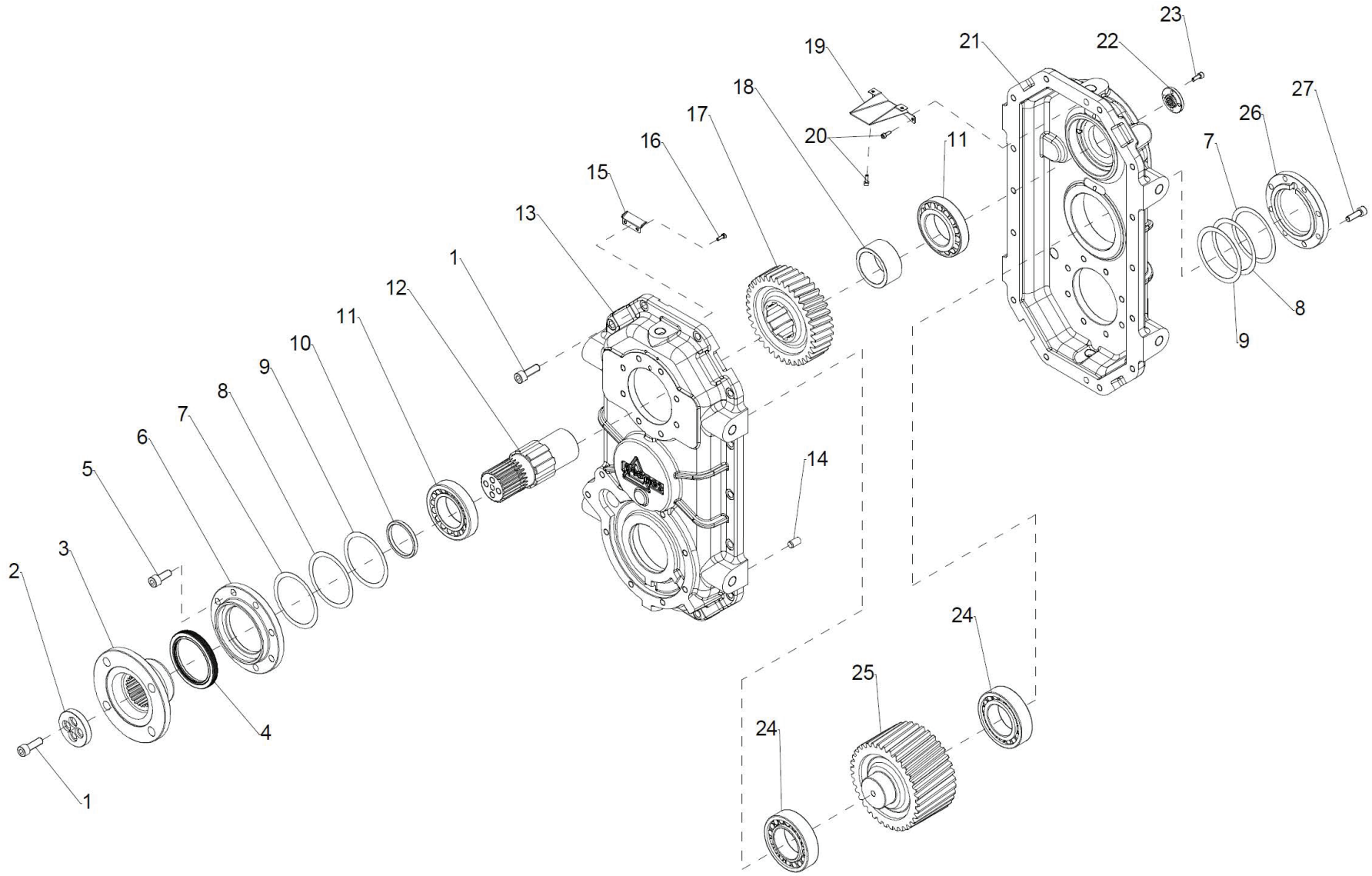

PARTS LIST ON FOLLOWING PAGE

GA2700069 GOLDACRES	TRANSFER CASE, G4, DROMOS	REV 00

Transfer Case, Dromos, Upper Drive Assembly, Parts List

IF DESCRIPTION PREFIX IS ASSEMBLY DRAWING ONLY OR PRODUCTION DRAWING ONLY THE ITEM IS NOT FOR SALE			
ITEM	PART NUMBER	DESCRIPTION	QTY
1	GA5056265	ADAPTOR, HYDRAULIC, 90°, SUIT, DROMOS, TRANSFER CASE	18
2	GA5079147	WASHER, GEAR, 10,5X20X2,0 ISO 7089 - HV 200, DROMOS	1
3	GA5079148	FLANGE, TRANSMISSION, SUIT, DROMOS, TRANSFER CASE, UPPER DRIVE, INPUT SHAFT	1
4	GA5079149	SEAL, OIL, SUIT, DROMOS, TRANSFER CASE, UPPER DRIVE, INPUT SHAFT	1
5	GA5071085	SHCS M10 X 25 GR12.9 ZP	8
6	GA5079151	RING SUPPORT COVER, SUIT, DROMOS, TRANSFER CASE, UPPER DRIVE, INPUT SHAFT	1
7	GA5079152	SHIM, 75,3X89,8X0,15, DROMOS	8
8	GA5079153	SHIM, 75,3X89,8X0,20, DROMOS	8
9	GA5079154	SHIM, 75,3X89,8X0,30, DROMOS	8
10	GA5079155	SPACER, SUIT, DROMOS, UPPER DRIVE, INPUT SHAFT	1
11	GA5079156	BEARING, SUIT, DROMOS, TRANSFER CASE, UPPER DRIVE, INPUT SHAFT	2
12	GA5079157	DRIVE INPUT SHAFT, SUIT, DROMOS, TRANSFER CASE, UPPER DRIVE	1
13	GA5079158	TRANSFER CASING, DROMOS, 4WD, G3 G4, TRANSFER CASE	1
14	GA5079159	PIN, PARALLEL, SUIT, DROMOS, TRANSFER CASE, UPPER DRIVE, INPUT SHAFT	2

IF DESCRIPTION PREFIX IS ASSEMBLY DRAWING ONLY OR PRODUCTION DRAWING ONLY THE ITEM IS NOT FOR SALE			
ITEM	PART NUMBER	DESCRIPTION	QTY
15	GA5079160	OIL GUTTER, SMALL, SUIT, DROMOS, TRANSFER CASE	1
16	GA5079161	SHCS, TCEI M4 X 12 UNI 5931 12.9	2
17	GA5079162	GEAR, SUIT, DROMOS, TRANSFER CASE, UPPER DRIVE, INPUT SHAFT	1
18	GA5079163	SPACER, SUIT, DROMOS, TRANSFER CASE, UPPER DRIVE, INPUT SHAFT	
19	GA5079164	OIL GUTTER, LARGE, SUIT, DROMOS, TRANSFER CASE	1
20	GA5079165	SHCS, TCEI M4 X 12 UNI 5931 12.9	4
21	GA5079166	TRANSFER COVER, DROMOS, TRANSFER CASE	1
22	GA5079167	RING, GEAR, SUIT, TRANSFER COVER, DROMOS, TRANSFER CASE, UPPER DRIVE, INPUT SHAFT	1
23	GA5079168	SHCS, TCEI M5 X 14 UNI 5931 12.9	4
24	GA5079169	BEARING, SUIT, DROMOS, TRANSFER CASE, CENTRE DRIVE	2
25	GA5079170	GEAR, SHAFT, SUIT, DROMOS, TRANSFER CASE, CENTRE DRIVE	
26	GA5079171	FLANGE, COVER, SUIT, DROMOS, TRANSFER CASE, LOWER DRIVE	1
27	GA5056365	CAP SCREW, SOCKET HEAD, HEXAGON, M8X25, UNI 5931 12.9, DROMOS	8

GA2700069 GOLDACRES	TRANSFER CASE, G4, DROMOS	REV 00

Transfer Case, Dromos, Disengagement Casing Assembly

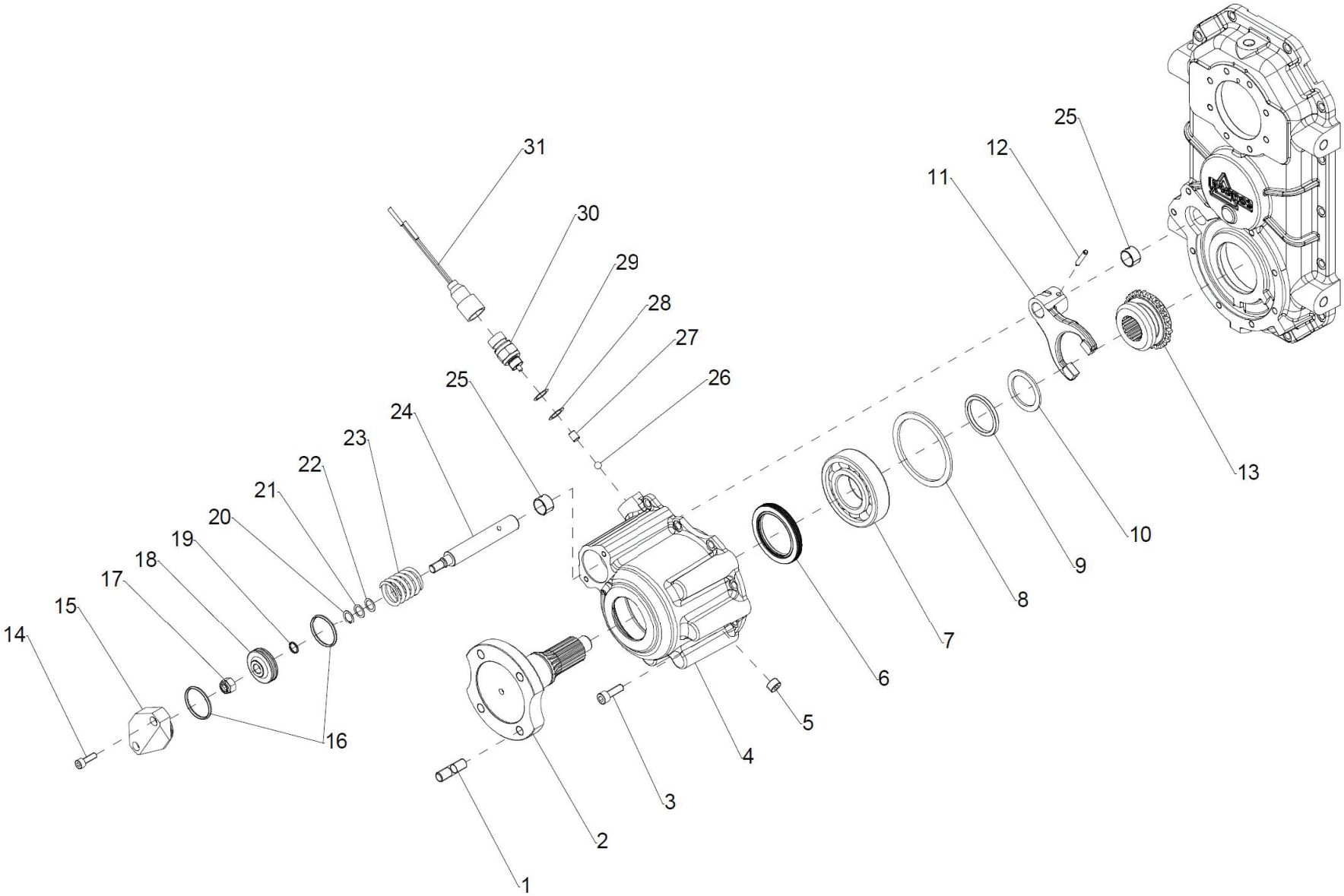

PARTS LIST ON FOLLOWING PAGE

GA2700069 GOLDACRES	TRANSFER CASE, G4, DROMOS	REV 00

Transfer Case, Dromos, Disengagement Casing Assembly, Parts List

IF DESCRIPTION PREFIX IS ASSEMBLY DRAWING ONLY OR PRODUCTION DRAWING ONLY THE ITEM IS NOT FOR SALE			
ITEM	PART NUMBER	DESCRIPTION	QTY
1	GA5079172	ADAPTOR, HYDRAULIC, 90°, SUIT, DROMOS, TRANSFER CASE	4
2	GA5079173	FLANGE, TRANSMISION, SUIT, DROMOS, TRANSFER CASE, DISENGAGEMENT CASING	1
3	GA5056265	CAP SCREW, SOCKET HEAD, HEXAGON, M10X30 UNI 5931 12.9, DROMOS	9
4	GA5079174	DISENGAGEMENT CASING, SUIT, DROMOS, TRANSFER CASE	1
5	GA5079175	PLUG, SUIT, DROMOS, TRANSFER CASE, DISENGAGEMENT CASING	1
6	GA5079176	SEAL, OIL, SUIT, DROMOS, TRANSFER CASE, DISENGAGEMENT CASING	1
7	GA5079177	BEARING, SUIT, DROMOS, TRANSFER CASE, DISENGAGEMENT CASING	1
8	GA5079178	RETAINING RING, SUIT, DROMOS, TRANSFER CASE, DISENGAGEMENT CASING	1
9	GA5079179	SPACER, SUIT, DROMOS, TRANSFER CASE, DISENGAGEMENT CASING	1
10	GA5079180	RETAINING RING, SUIT, DROMOS, TRANSFER CASE, DISENGAGEMENT CASING	1
11	GA5079181	FORK, SUIT, DROMOS, TRANSFER CASE, DISENGAGEMENT CASING	1
12	GA5079182	SPRING PIN, SUIT, DROMOS, TRANSFER CASE, DISENGAGEMENT CASING	1
13	GA5079183	CLUTCH SLEEVE, SUIT, DROMOS, TRANSFER CASE, DISENGAGEMENT CASING	1
14	GA5056365	CAP SCREW, SOCKET HEAD, HEXAGON, M8X25, UNI 5931 12.9, DROMOS	2
15	GA5079184	COVER, FORK ROD, SUIT, DROMOS, TRANSFER CASE, DISENGAGEMENT CASING	1
16	GA5079185	O-RING, SUIT, DROMOS, TRANSFER CASE, DISENGAGEMENT CASING	2

IF DESCRIPTION PREFIX IS ASSEMBLY DRAWING ONLY OR PRODUCTION DRAWING ONLY THE ITEM IS NOT FOR SALE			
ITEM	PART NUMBER	DESCRIPTION	QTY
17	GA5079186	LOCK NUT, SUIT, DROMOS, TRANSFER CASE, DISENGAGEMENT CASING	1
18	GA5079187	PISTON, SUIT, DROMOS, TRANSFER CASE, DISENGAGEMENT CASING	1
19	GA5056405	O-RING 2-015 - 14,00X1,78, NBR 70, PARKER, SUIT, REAR AXLE, DROMOS	1
20	GA5079188	SHIM, 14X20X0,30, SUIT, DROMOS TRANSFER CASE	2
21	GA5079189	SHIM, 14X20X0,20, SUIT, DROMOS TRANSFER CASE	4
22	GA5079190	SHIM 14X20X0,15, SUIT, DROMOS TRANSFER CASE	2
23	GA5079191	SPRING, SUIT, DROMOS, TRANSFER CASE, DISENGAGEMENT CASING	1
24	GA5079192	FORK ROD, SUIT, DROMOS, TRANSFER CASE, DISENGAGEMENT CASING	1
25	GA5079193	BUSHING, SUIT, DROMOS, TRANSFER CASE, DISENGAGEMENT CASING	2
26	GA5056425	BALL DIAM. 3/8", 9,525, G40 - AISI52100, TRIDELLA, DROMOS	1
27	GA5079194	PIN, SUIT, DROMOS, TRANSFER CASE, DISENGAGEMENT CASING	1
28	GA5079195	SHIM 18X25X0,20, SUIT, DROMOS, TRANSFER CASE	5
29	GA5079196	SHIM 18X25X0,10, SUIT, DROMOS, TRANSFER CASE	5
30	GA5079197	SWITCH, SUIT, DROMOS, TRANSFER CASE, DISENGAGEMENT CASING	1
31	GA5056450	CABLE CONNECTOR, SUIT, REAR AXLE, DROMOS	1

GA2700069 GOLDACRES	TRANSFER CASE, G4, DROMOS	REV 00

Transfer Case, Dromos, Bottom Drive Assembly

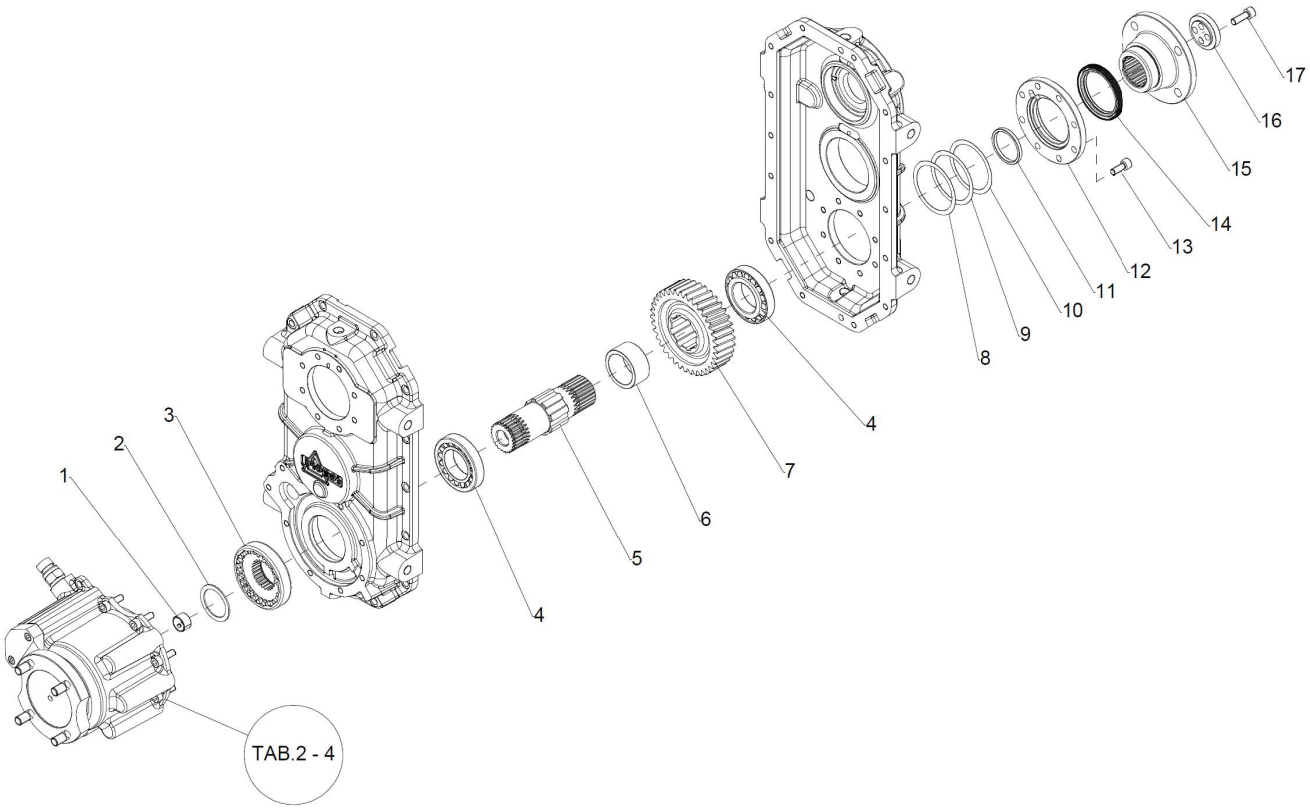

IF DESCRIPTION PREFIX IS ASSEMBLY DRAWING ONLY OR PRODUCTION DRAWING ONLY THE ITEM IS NOT FOR SALE			
ITEM	PART NUMBER	DESCRIPTION	QTY
1	GA5079193	BUSHING, SUIT, DROMOS, TRANSFER CASE, BOTTOM DRIVE SHAFT	1
2	GA5079216	RETAINING RING, SUIT, DROMOS, TRANSFER CASE, BOTTOM DRIVE SHAFT	1
3	GA5079217	CLUTCH RING, SUIT, DROMOS, TRANSFER CASE, BOTTOM DRIVE SHAFT	1
4	GA5079218	BEARING, SUIT, DROMOS, TRANSFER CASE, BOTTOM DRIVE SHAFT	2
5	GA5079219	DRIVE SHAFT, BOTTOM, SUIT, DROMOS, TRANSFER CASE	1
6	GA5079163	SPACER, SUIT, DROMOS, TRANSFER CASE, UPPER DRIVE, INPUT SHAFT	1
7	GA5079162	GEAR, SUIT, DROMOS, TRANSFER CASE, UPPER DRIVE, INPUT SHAFT	1
8	GA5079154	SHIM, 75,3X89,8X0,30, DROMOS	4
9	GA5079153	SHIM, 75,3X89,8X0,20, DROMOS	4
10	GA5079152	SHIM, 75,3X89,8X0,15, DROMOS	4
11	GA5079155	SPACER, SUIT, DROMOS, UPPER DRIVE, INPUT SHAFT	1
12	GA5079151	RING SUPPORT COVER, SUIT, DROMOS, TRANSFER CASE, UPPER DRIVE, INPUT SHAFT	1
13	GA5071085	SHCS M10 X 25 GR12.9 ZP	8
14	GA5079149	SEAL, OIL, SUIT, DROMOS, TRANSFER CASE, UPPER DRIVE, INPUT SHAFT	1
15	GA5079148	FLANGE, TRANSMISSION, SUIT, DROMOS, TRANSFER CASE, UPPER DRIVE, INPUT SHAFT	1
16	GA5079147	WASHER, GEAR, 10,5X20X2,0 ISO 7089 - HV 200, DROMOS	1
17	GA5056265	CAP SCREW, SOCKET HEAD, HEXAGON, M10X30 UNI 5931 12.9, DROMOS	4
GA2700069 GOLDACRES		TRANSFER CASE, G4, DROMOS	REV 00

Transfer Case, Dromos, Lubrication Pump Assembly

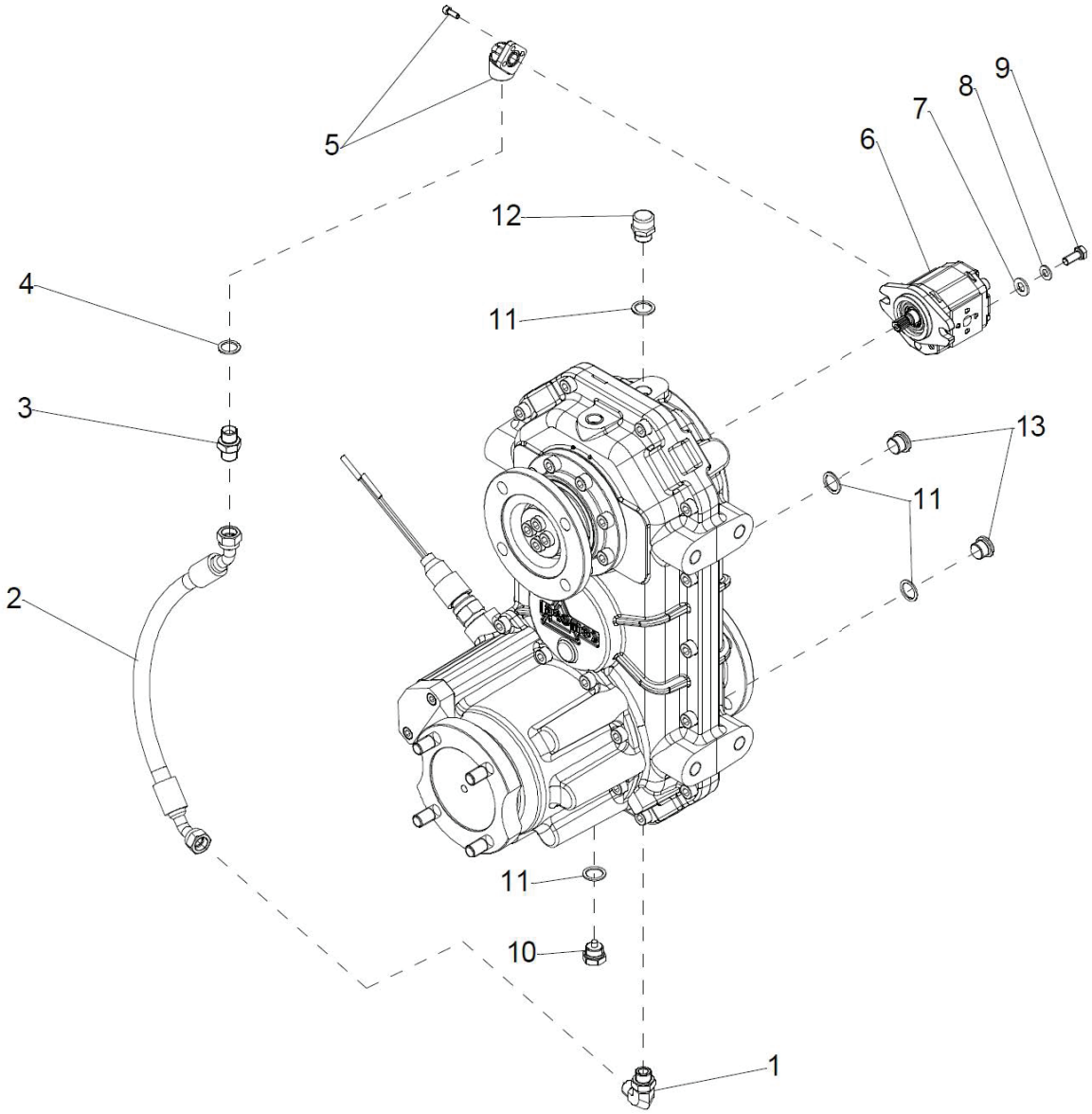

IF DESCRIPTION PREFIX IS ASSEMBLY DRAWING ONLY OR PRODUCTION DRAWING ONLY THE ITEM IS NOT FOR SALE			
ITEM	PART NUMBER	DESCRIPTION	QTY
1	GA5079198	ADAPTOR, HYDRAULIC, 90°, SUIT, DROMOS, TRANSFER CASE	1
2	GA5079199	LUBRICANT TUBE, SUIT, DROMOS, TRANSFER CASE	1
3	GA5079200	ADAPTOR, HYDRAULIC, STRAIGHT, SUIT, DROMOS, TRANSFER CASE	1
4	GA5079201	GASKET, SUIT, ADAPTOR, DROMOS, TRANSFER CASE	1
5	GA5079202	PORT, CONNECTOR, SUIT, LUBRICATION PUMP, DROMOS, TRANSFER CASE	1
6	GA5079203	PUMP, LUBRICATION, SUIT, DROMOS, TRANSFER CASE	1
7	GA5079204	WASHER 10,5X20X2,0 ISO 7089 - HV 200, SUIT, DROMOS	2
8	GA5079205	WASHER 8,4X16X1,6 ISO 7089 - HV 200, SUIT, DROMOS	2
9	GA5004085	BOLT M8 X 20 GR8.8 ZP	2
10	GA5079207	PLUG, DRAIN, MAGNETIC, SUIT, DROMOS, TRANSFER CASE	1
11	GA5073430	WASHER, COPPER GASKET, 18 X 24 X 1.5 mm, DROMOS	4
12	GA5079209	BREATHER, SUIT, DROMOS, TRANSFER CASE	
13	GA5079210	PLUG, SUIT, DROMOS, TRANSFER CASE	2
GA2700069 GOLDACRES		TRANSFER CASE, G4, DROMOS	REV 00

17 - Cabin

Cabin, Chassis Mounting & Beacon

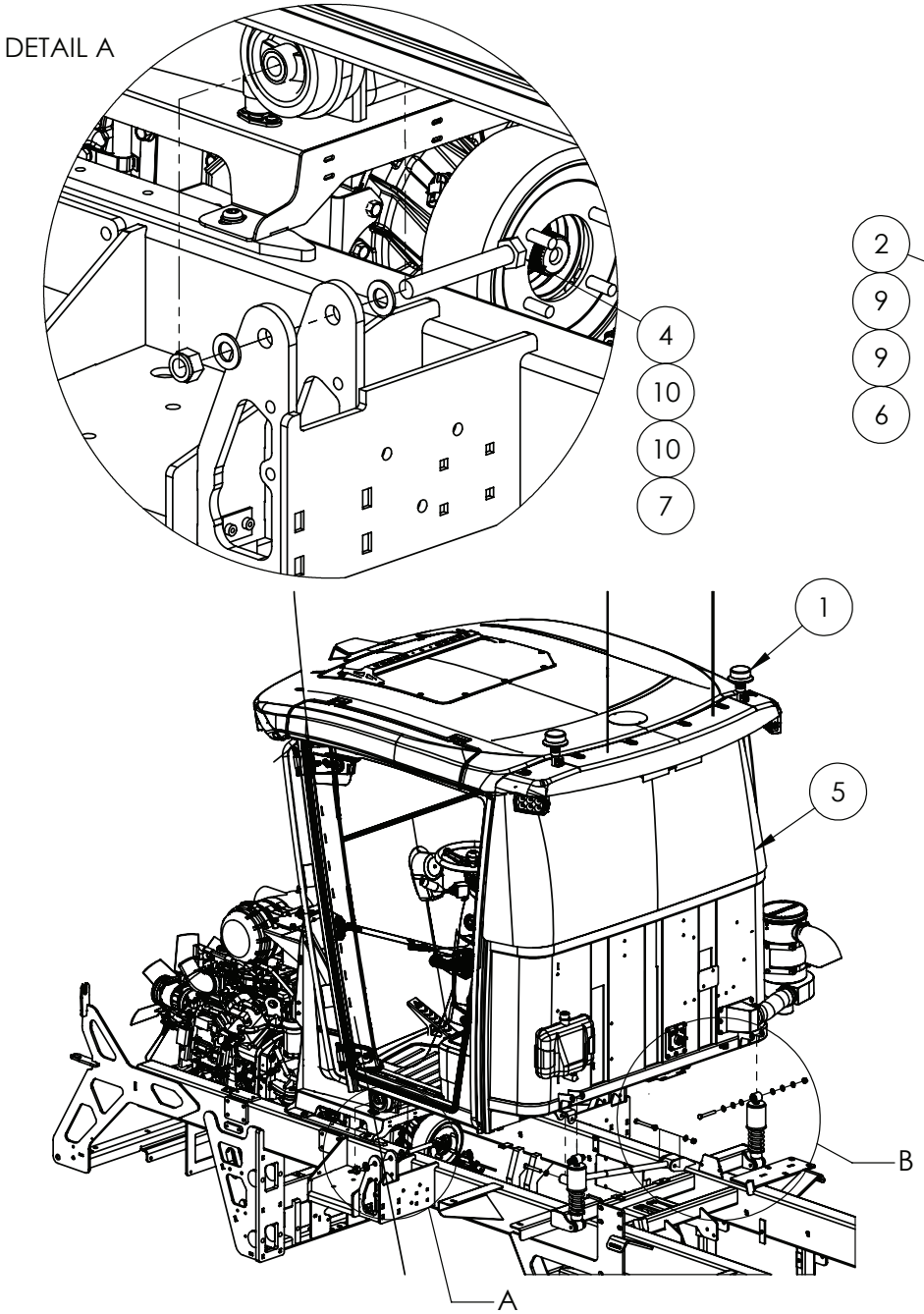

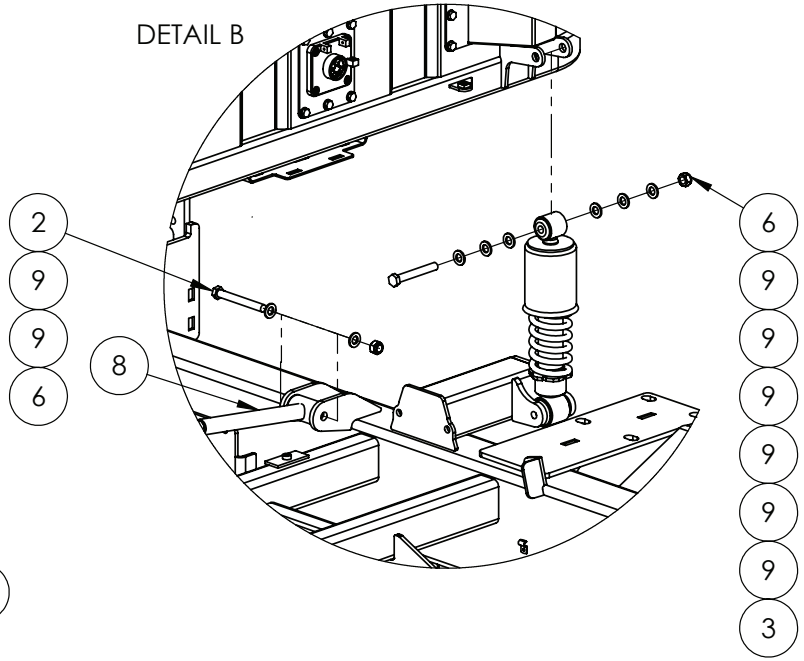

IF DESCRIPTION PREFIX IS ASSEMBLY DRAWING ONLY OR PRODUCTION DRAWING ONLY THE ITEM IS NOT FOR SALE			
ITEM	PART NUMBER	DESCRIPTION	QTY
1	GA5048976	BEACON, LED, AMBER, DIN A POLE MOUNT, FLEXIBLE	2
2	GA5000259	BOLT M12 X 100 GR8.8 ZP	1
3	GA5011263	BOLT M12 X 90 GR8.8 ZP	3
4	GA5001531	BOLT M20 X 150 GR8.8 ZP	2
5	GA6100791	CABIN ASSEMBLY, CLAAS, G4, MY24, CONFIGURABLE	1
6	GA5012461	NUT M12 NYLOC ZP	4
7	GA5048125	NUT M20 NYLOC COARSE ZP	2
8	GA4659380	PANHARD ROD, 655mm CENTRES, CROPCRUISER, CLAAS CABIN	1
9	GA5000577	WASHER 12mm FLAT SS HD	16
10	GA5001741	WASHER 20mm FLAT SS HD	4
GA7800203 GOLDACRES		ASSEMBLY DRAWING ONLY, CABIN, CHASSIS MOUNT, G4 S2, MY24	REV 00

Claas Cabin, Front View

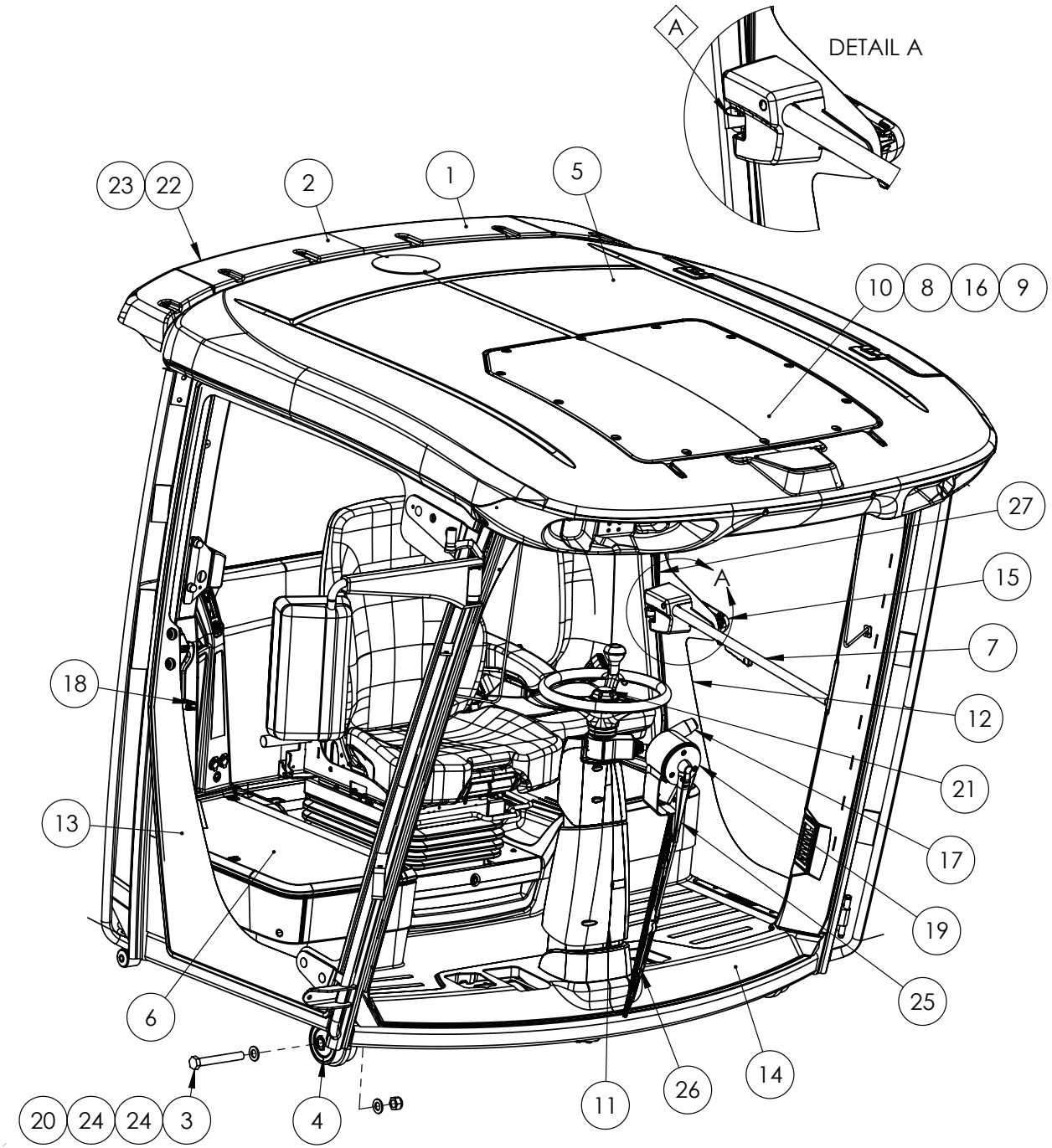

REPLACEMENT PARTS			
ITEM	PART NUMBER	DESCRIPTION	QTY
A	GA5026230	PIN, DOOR LATCH, CLAAS, CABIN, X10	1
-	GA5026231	LATCH BOW, SUIT, CLAAS, CABIN, PIN, X10	1
-	GA5026232	WASHER, 13X30X4, CLAAS, DOOR LATCH PIN, X10	1
-	GA5026233	NUT, CLAAS, SUIT, DOOR LATCH PIN, X10	1

IF DESCRIPTION PREFIX IS ASSEMBLY DRAWING ONLY OR PRODUCTION DRAWING ONLY THE ITEM IS NOT FOR SALE			
ITEM	PART NUMBER	DESCRIPTION	QTY
1	GA5054265	AERIAL, UHF, AE409L GME (INCLUDES BASE & LEAD)	1
2	GA5054255	ANTENNA AERIAL RADIO AM FM WITH BASE AND LEAD	1
3	GA5001531	BOLT M20 X 150 GR8.8 ZP	2
4	GA5054110	BUSHING SUIT CLAAS CAB 2011	2
5	GA5054530	CABIN ROOF SUIT CLAAS CAB 2011	1
6	GA5070404	COVER PANEL, CABIN FUSE BOX, EXCLUDING DECAL, CLAAS	1
7	GA5026473	DOOR LOCK, CABIN, CLAAS, X10 & X11	1
8	GA5054185	EVAPORATOR COIL SUIT CLAAS CAB 2011	1
9	GA5054190	EXPANSION VALVE SUIT CLAAS CAB 2011	1
10	GA5054275	FAN BLOWER ASSEMBLY, SUIT CLAAS CABIN, MY11 - ON	1
11	GA5055540	GAS STRUT, STEERING COLUMN LOWER, CLAAS	1
12	GA5065484	GLASS SUIT CLAAS CAB DOOR LEFT	1
13	GA5065483	GLASS SUIT CLAAS CAB DOOR RIGHT	1
14	GA5065489	GLASS, FRONT WINDSCREEN, LAMINATED, FITTED FROM CABIN S/N X1003708, CLAAS	1
15	GA5054180	HANDLE EXTERIOR SUIT CLAAS CAB 2011	1
16	GA5054115	HEATER EXCHANGE / CORE SUIT CLAAS CAB 2011	1
17	GA5054195	INDICATOR STALK SUIT CLAAS CAB 2011	1
18	GA5054135	LATCH HANDLE, RH DOOR, CLAAS CABIN	1
19	GA5078977	MOTOR, 12V, WINSCREEN WIPER, CLAAS CABIN, SERIAL NUMBER X1012900 ON, 00 2683 436 1	1
20	GA5048125	NUT M20 NYLOC COARSE ZP	2
21	GA4504105	PLATE-ROUND ALU -STEERING WHEEL SP2011	1
22	GA5066805	ROOF PANEL, REAR ROOF, CLAAS CABIN	1
23	GA5071950	ROOF SUPPORT PANEL, REAR ROOF, CLAAS CABIN	1
24	GA5001741	WASHER 20mm FLAT SS HD	4
25	GA5078978	WIPER ARM & BLADE, SUIT, CLAAS CABIN, SERIAL NUMBER X1012900 ON, 00 2716 405 1	1
26	GA5054155	WIPER BLADE SUIT CLAAS CAB 2011, PRE CABIN X1003708	1
27	GA5065461	SEAL SUIT CLAAS CAB DOOR	1
GA7800229 GOLDACRES		CLAAS CABIN, FULL ASSEMBLY, FRONT	REV

Claas Cabin, Rear View

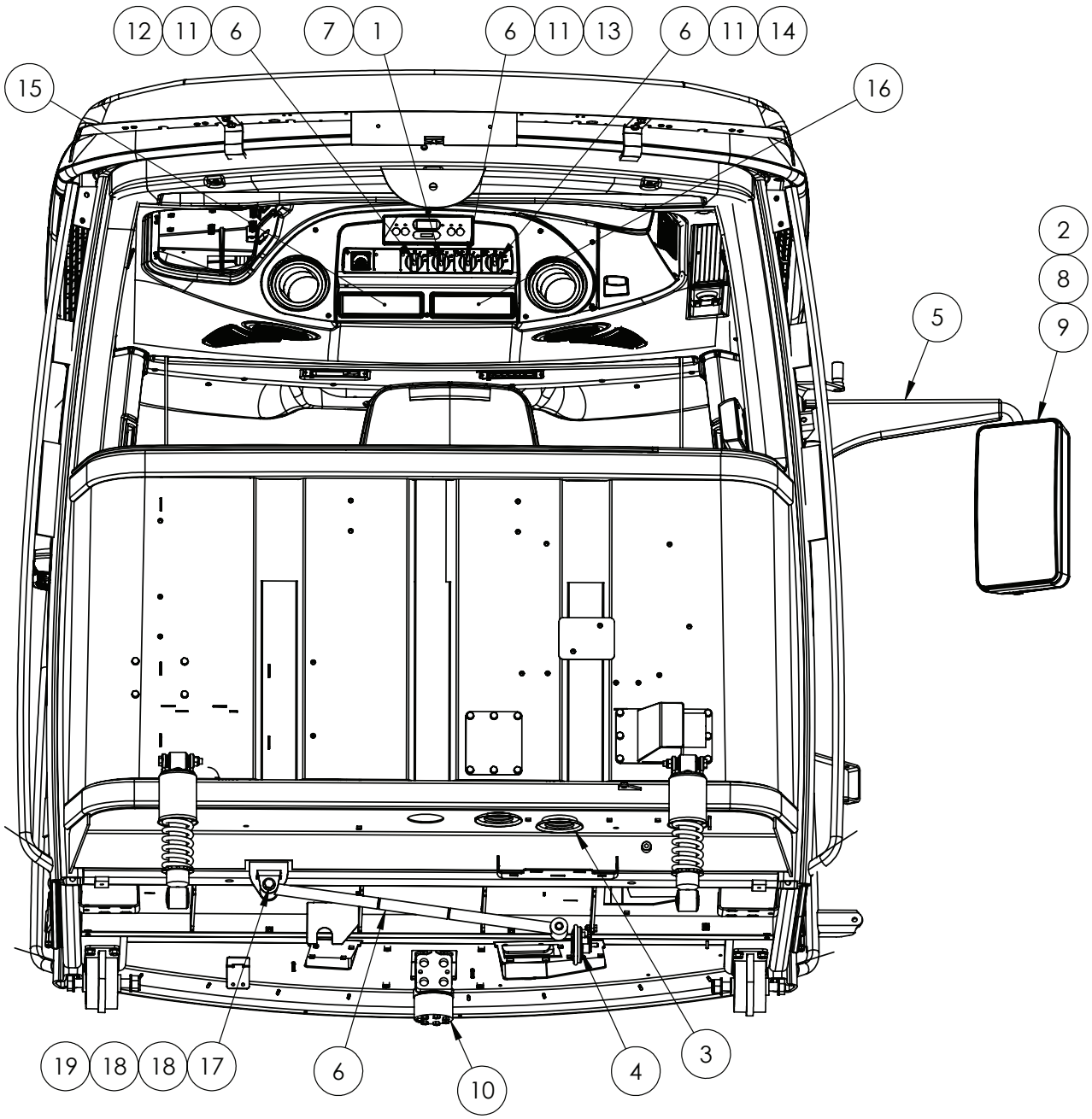

IF DESCRIPTION PREFIX IS ASSEMBLY DRAWING ONLY OR PRODUCTION DRAWING ONLY THE ITEM IS NOT FOR SALE			
ITEM	PART NUMBER	DESCRIPTION	QTY
1	GA5054285	CONTROL MODULE, A/C AND HEATER UNIT, AC MATIC, 12V, CLAAS CAB, 0558 817	1
2	GA5054130	COVER CAP MIRROR SUIT CLAAS CAB 2011	1
3	GA5069725	GROMET SLOP STOP BLA 105 X 60	2
4	GA5011983	HORN, 12V NARVA, 72517	1
5	GA5075270	MIRROR BRACKET, ADJUSTABLE, CLAAS	1
6	GA5054250	ROTORY KNOB FOR LIGHT SUIT CLAAS CAB 2012	3
7	GA5054280	SENDER TEMPERATURE SUIT CLAAS CAB 2011	3
8	GA5054125	SIDE MIRROR GLASS, SUIT CLAAS CAB	1
9	GA5054120	SIDE MIRROR, COMPLETE ASSEMBLY, SUIT CLAAS CAB	1
10	GA5000031	STEERING UNIT ORBITAL 102M203 T/s SP	1
11	GA5054270	SWITCH INSERT FOR LIGHTING KNOB SUIT CLAAS CAB 2011	3
12	GA5054210	SWITCH LIGHT LHS SUIT CLAAS CAB 2011	1
13	GA5054215	SWITCH LIGHT MIDDLE SUIT CLAAS CAB 2011	1
14	GA5054095	SWITCH LIGHT RHS SUIT CLAAS CAB 2011	1
15	GA5017409	AUDIO HEAD UNIT RECEIVER WITH BUILT IN BLUETOOTH	1
16	GA5017131	UHF 477 MHZ CB RADIO, GME TX4500 DIN SIZE	1
17	GA5000259	BOLT M12 X 100 GR8.8 ZP	2
18	GA5000577	WASHER M12 FLAT SS HD	4
19	GA5012461	NUT M12 NYLOC ZP	2
GA7800229 GOLDACRES		CLAAS CABIN, FULL ASSEMBLY, REAR VIEW	REV

Claas Cabin, Extinguisher, Cover Plates

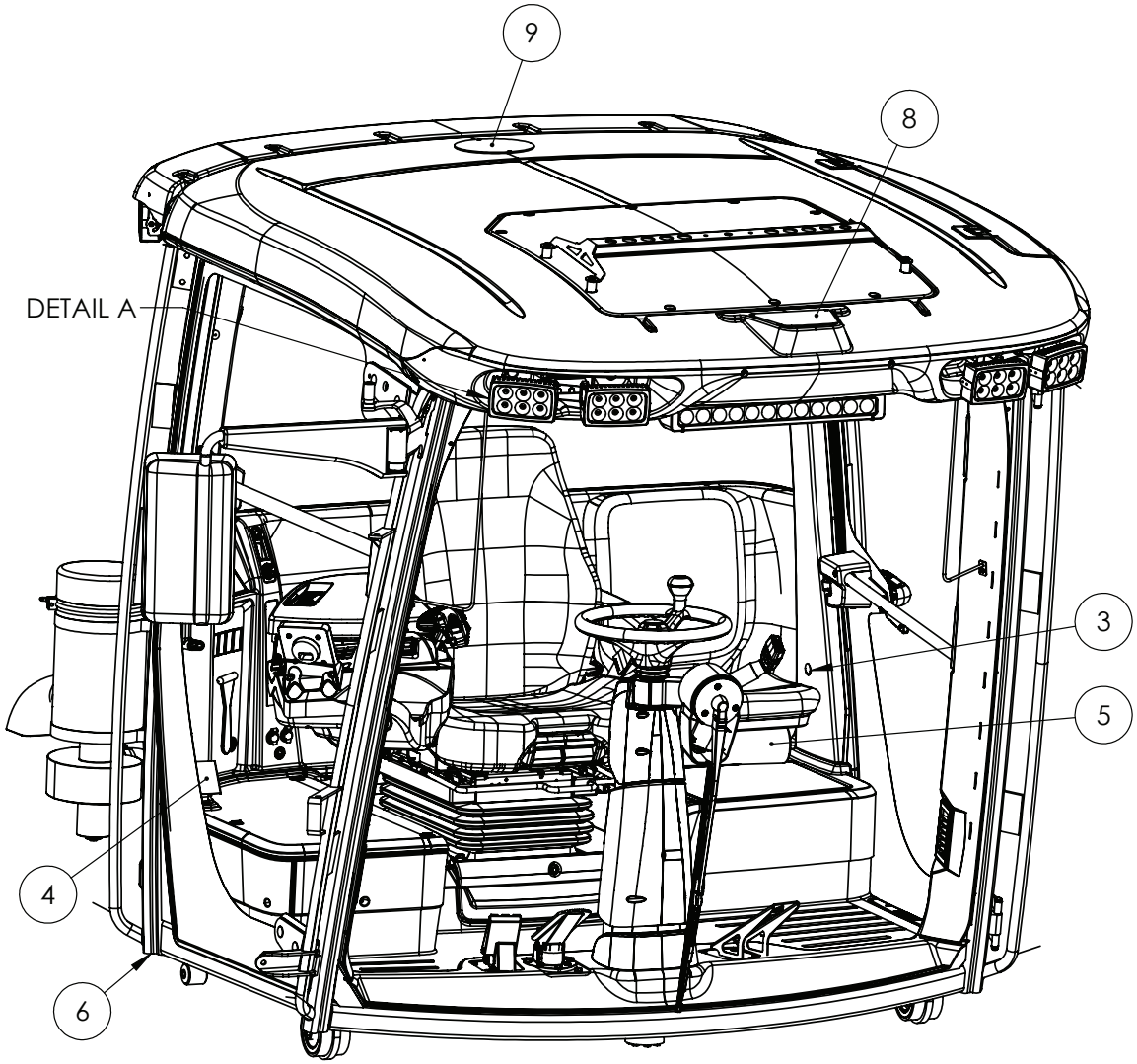

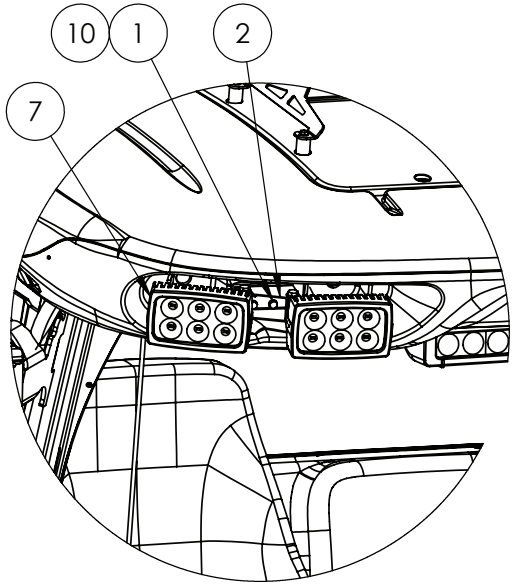

DETAIL A

(FOR ISOBUS PLUGS AND BEACON LIGHT SEE ELECTRICAL CHAPTER)

IF DESCRIPTION PREFIX IS ASSEMBLY DRAWING ONLY OR PRODUCTION DRAWING ONLY THE ITEM IS NOT FOR SALE			
ITEM	PART NUMBER	DESCRIPTION	QTY
1	GA5004041	BOLT M6 X 16 GR8.8 ZP	8
2	GA4404375	BRACKET, LIGHT MOUNT, CLAAS CABIN	4
3	GA5004437	COVER CAP FOR SCREWS SUIT CLAAS CAB 2011	-
4	GA4504390	COVER PLATE, ACCESS PORT, RIGHT SIDE DOOR JAM, CLAAS CABIN	1
5	GA5007099	EXTINGUISHER, FIRE B&E FLAMEGUARD 1KG ABE	1
6	GA5069905	FITTING BRASS 5/8 - 5/8 STRAIGHT HOSE BARB	2
7	GA3000250	LIGHT, LED, WORK, CABIN, 30 WATT, WITH CONNECTOR, BRACKETS & MOUNTING HARDWARE	6
8	GA4503815	PLATE RECEIVER MOUNT FRONT CLAAS CABIN	1
9	GA4503820	PLATE RECEIVER MOUNT REAR CLAAS CABIN	8
10	GA5004437	WASHER M6 FLAT SS	8
GA7800229 GOLDACRES	CLAAS CABIN, ASSEMBLED, FRONT VIEW		REV

Claas Cabin, LED Light Bar & Front Working Light Mounting

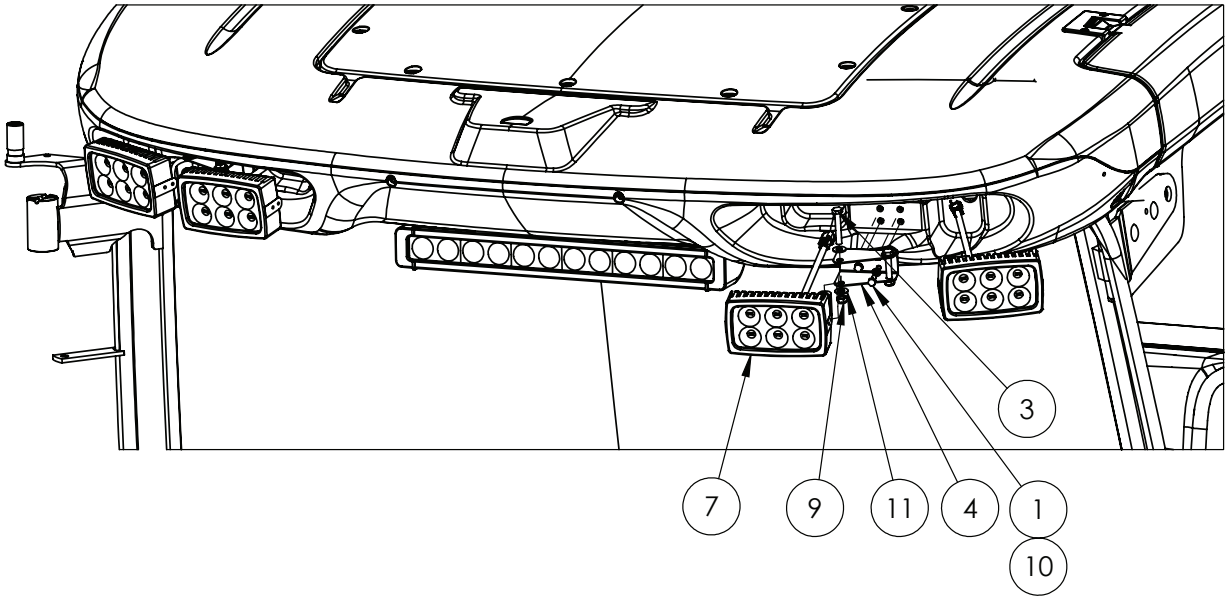

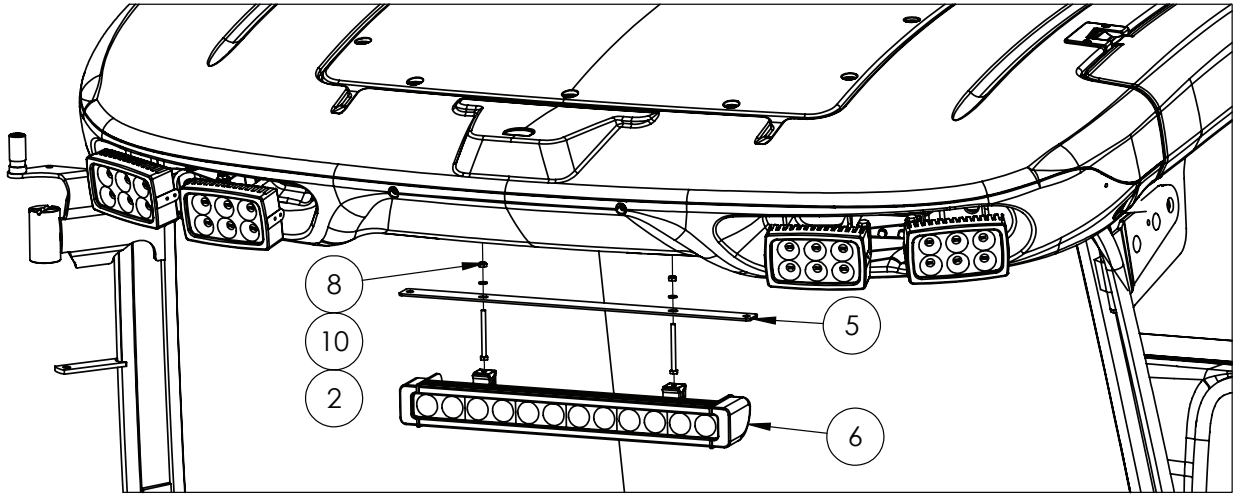

IF DESCRIPTION PREFIX IS ASSEMBLY DRAWING ONLY OR PRODUCTION DRAWING ONLY THE ITEM IS NOT FOR SALE			
ITEM	PART NUMBER	DESCRIPTION	QTY
1	GA5004041	BOLT M6 X 16 GR8.8 ZP	4
2	GA5004107	BOLT M6 X 70 GR8.8 ZP	2
3	GA5004727	BOLT M8 X 50 GR8.8 ZP	2
4	GA4404375	BRACKET, LIGHT MOUNT, CLAAS CABIN	1
5	GA4000188	LED LIGHT BAR MOUNT PLATE SUIT CLAAS ROOF X10	1
6	GA5075505	LIGHT, LED, BAR, 21.5 INCH 20 LED SLIM, LEDST3K-20L, STEDI	1
7	GA3000250	LIGHT, LED, WORK, CABIN, 30 WATT	2
8	GA5048115	NUT M6 NYLOC ZP	2
9	GA5004917	NUT M8 NYLOC ZP	2
10	GA5004437	WASHER 6mm FLAT SS	10
11	GA5003643	WASHER 8mm FLAT SS HD	4
GA7800360 GOLDACRES		LIGHTING, CLAAS CAB, WORK LIGHTS & LIGHT BAR, FRONT & REAR	REV 01.B

Claas Cabin, Rear Work Light Mounting

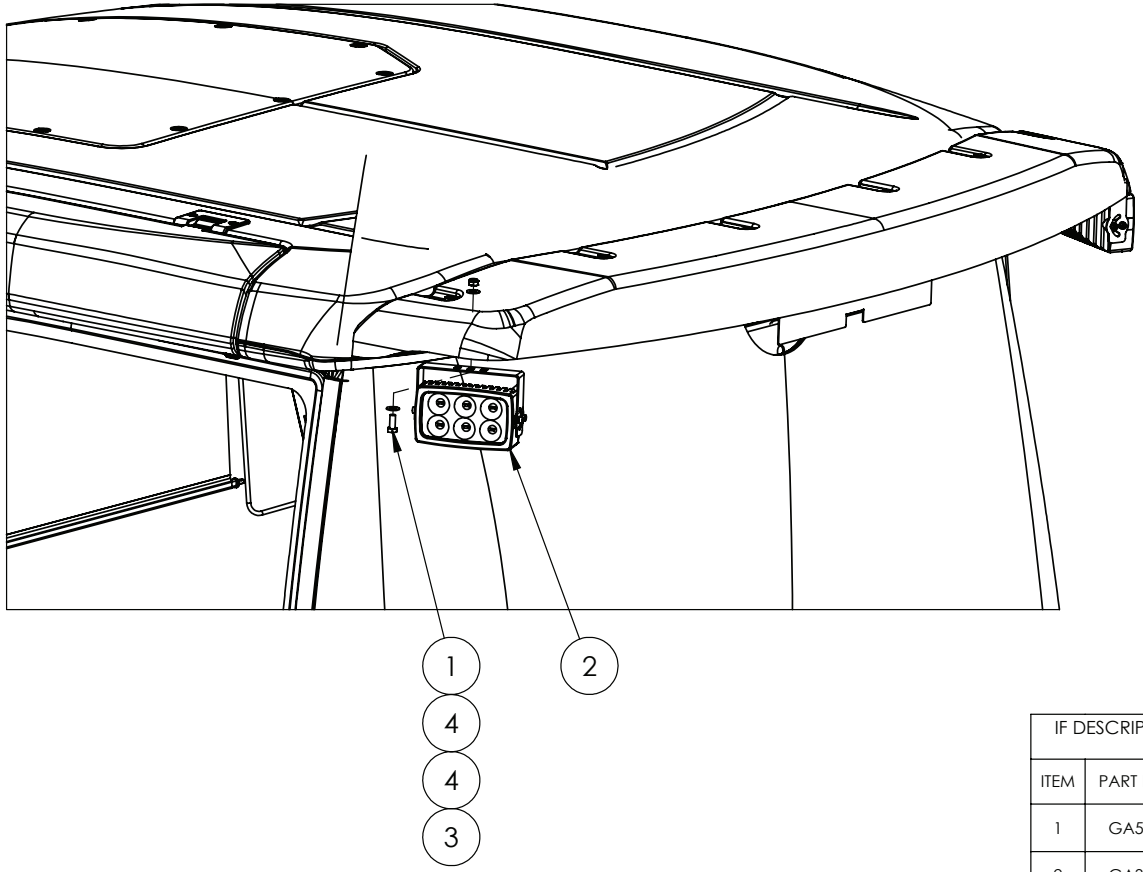

IF DESCRIPTION PREFIX IS ASSEMBLY DRAWING ONLY OR PRODUCTION DRAWING ONLY THE ITEM IS NOT FOR SALE			
ITEM	PART NUMBER	DESCRIPTION	QTY
1	GA5004085	BOLT M8 X 20 GR8.8 ZP	1
2	GA3000250	LIGHT, LED, WORK, CABIN, 30 WATT	2
3	GA5004917	NUT M8 NYLOC ZP	1
4	GA5003643	WASHER 8mm FLAT SS HD	2
GA7800360 GOLDACRES		LIGHTING, CLAAS CAB, WORK LIGHTS & LIGHT BAR, FRONT & REAR	REV 01.B

Claas Cabin, Washer Bottle & Air Intake

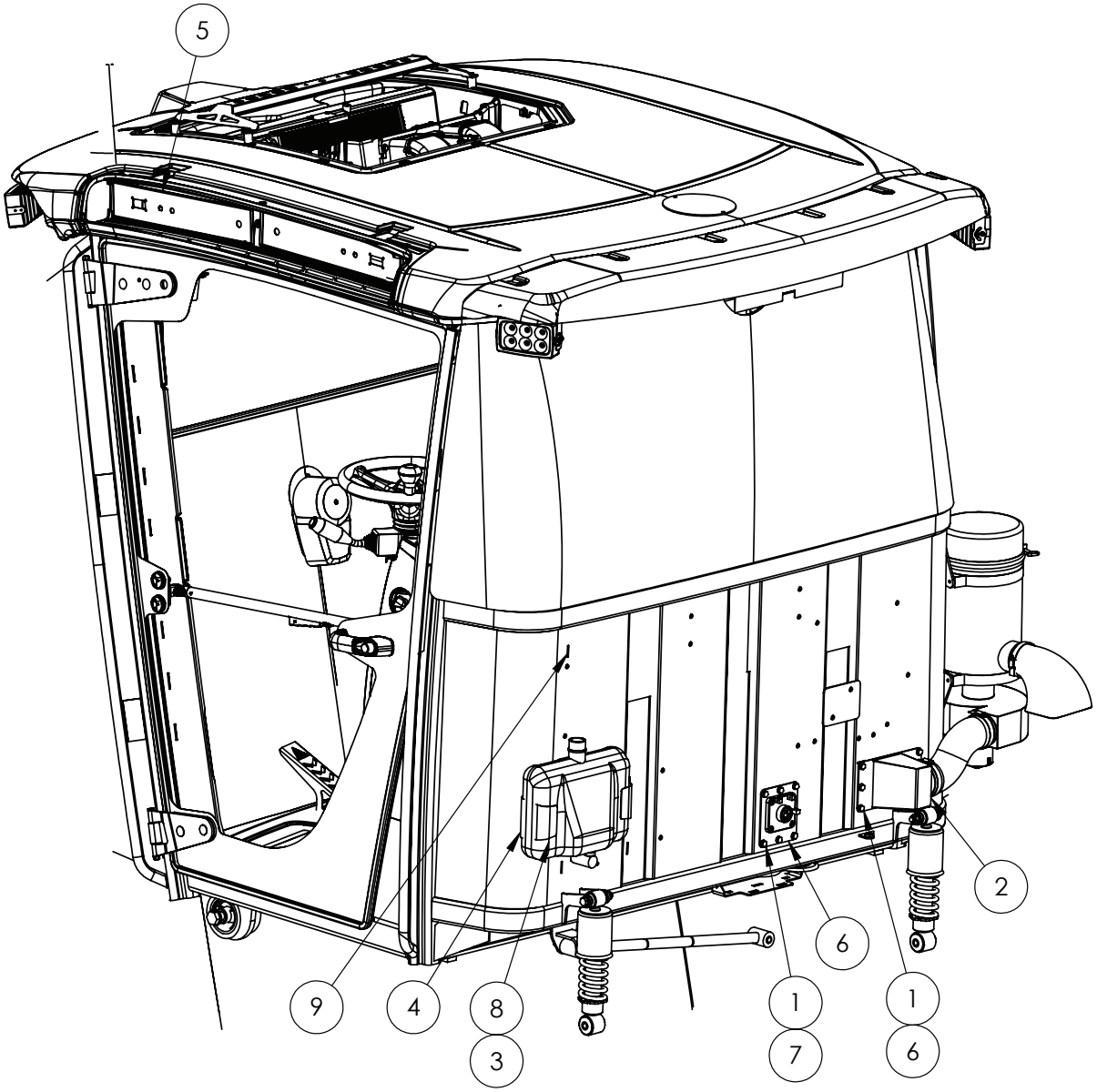

(FOR ISOBUS PLUGS AND BEACON LIGHT SEE ELECTRICAL CHAPTER)

IF DESCRIPTION PREFIX IS ASSEMBLY DRAWING ONLY OR PRODUCTION DRAWING ONLY THE ITEM IS NOT FOR SALE			
ITEM	PART NUMBER	DESCRIPTION	QTY
1	GA5011465	BOLT M8 X 16 GR8.8 ZP	12
2	GA4658850	CARBON FILTER AIR INTAKE	1
3	GA5012199	GROMMET, 29MM OD, NEOPRENE	1
4	GA4505035	MOUNTING BRACKET WASHER BOTTLE	1
5	GA4504015	PLATE, BLANKING A/C AIR INTAKE, CLAAS CABIN SP	1
6	GA4509350	PLATE, ISO CONNECTOR MOUNT, CABIN REAR, CROP CRUISER	1
7	GA5003643	WASHER 8mm FLAT SS HD	8
8	GA5070785	WINDSCREEN WASHER BOTTLE 5.8L	1
9	GA5017909	XMAS TREE CLIP, BLACK, 16mm HEAD, 27mm LENGTH 6.6 - 7.5mm HOLE SIZE	17
GA7800229 GOLDACRES		CLAAS CABIN, ASSEMBLY, REAR VIEW	REV

ISO Connector Plate & Plug

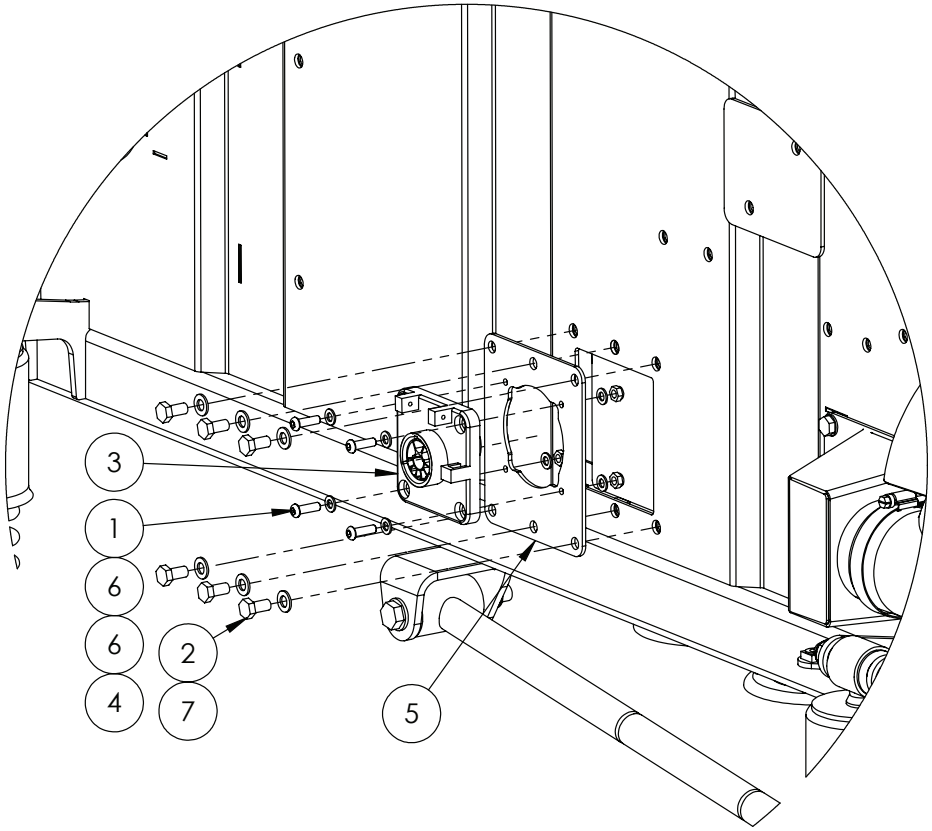

IF DESCRIPTION PREFIX IS ASSEMBLY DRAWING ONLY OR PRODUCTION DRAWING ONLY THE ITEM IS NOT FOR SALE			
ITEM	PART NUMBER	DESCRIPTION	QTY
1	GA5004053	BHCS M6 X 20 SS A2-70	4
2	GA5011465	BOLT M8 X 16 GR8.8 ZP	6
3	GA3000872	ELECTRICAL CONNECTOR, ISO BUS, 11783-2, 9 PIN, BOX, IBBC BREAKAWAY 14084002131	1
4	GA5004429	NUT M6 NYLOC SS	4
5	GA4509350	PLATE, ISO CONNECTOR MOUNT, CABIN REAR, CROP CRUISER	1
6	GA5054170	WASHER 6mm FLAT SS	8
7	GA5003651	WASHER 8mm FLAT SS	6
GA6100450 GOLDACRES	G4.7 G5 G6 MY15 CABIN		REV

Claas Cabin Roof Mount, John Deere

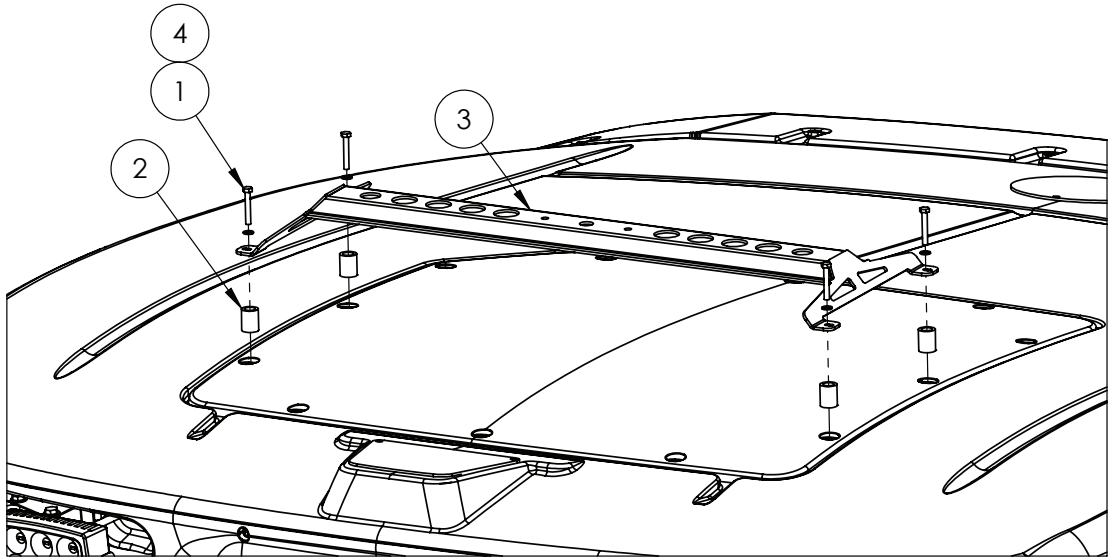

(FOR ISOBUS PLUGS AND BEACON LIGHT SEE ELECTRICAL CHAPTER)

IF DESCRIPTION PREFIX IS ASSEMBLY DRAWING ONLY OR PRODUCTION DRAWING ONLY THE ITEM IS NOT FOR SALE			
ITEM	PART NUMBER	DESCRIPTION	QTY
1	GA5004081	BOLT M6 X 40 GR8.8 ZP	4
2	GA4552075	CRUSH TUBE, 10.2 ID X 15 OD X 15 LONG	4
3	GA4660140	RECEIVER MOUNT SUIT JOHN DEERE	1
4	GA5004437	WASHER M6 FLAT SS	4
GA7800229 GOLDACRES		CLAAS CABIN, JOHN DEERE ROOF MOUNT	REV

Claas Cabin, Cup Holder & Master Key Locking Cylinder

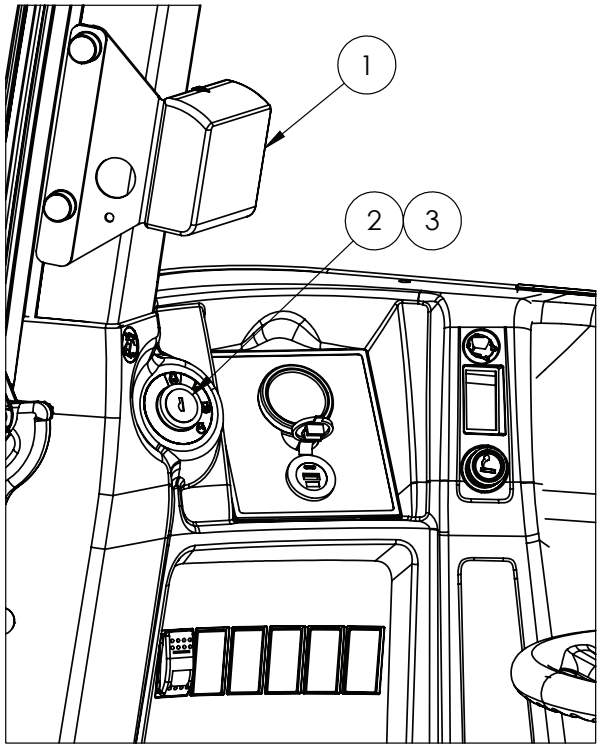

IF DESCRIPTION PREFIX IS ASSEMBLY DRAWING ONLY OR PRODUCTION DRAWING ONLY THE ITEM IS NOT FOR SALE			
ITEM	PART NUMBER	DESCRIPTION	QTY
1	GA5054100	CUPHOLDER SUIT CLAAS CAB 2011	1
2	GA5054635	LOCKING CYLINDER SUIT CLASS CAB 2017, 00 0536 213 0	1
3	GA5054206	MASTER KEY, SUIT CLAAS CABIN DOOR AND IGNITION, 2017 ON	1
GA7800229 GOLDACRES		CLAAS CABIN, FRONT BASE, CORNER VIEW	REV

Claas Cabin, GPS Accessories Bar

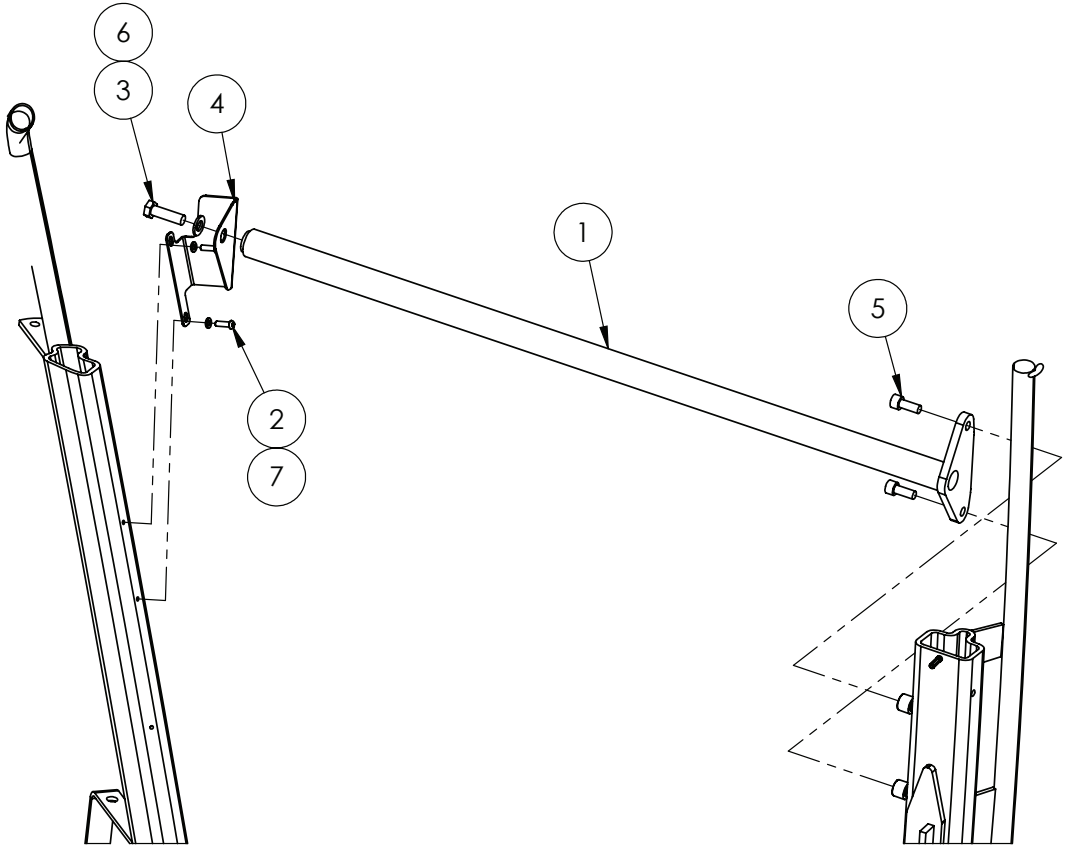

IF DESCRIPTION PREFIX IS ASSEMBLY DRAWING ONLY OR PRODUCTION DRAWING ONLY THE ITEM IS NOT FOR SALE			
ITEM	PART NUMBER	DESCRIPTION	QTY
1	GA4660680	ACCESSORY RAIL BAR, STRAIGHT, CABIN, CROP CRUISER, 2015	1
2	GA5004053	BHCS M6 X 20 SS A2-70	2
3	GA5011263	BOLT M12 X 90 GR8.8 ZP	1
4	GA4509450	PLATE, BENT, CONSOLE RAIL MOUNT FRONT, CLASS CABIN	1
5	GA5071085	SHCS M10 X 25 GR12.9 ZP	2
6	GA5000577	WASHER 12mm FLAT SS HD	1
7	GA5004437	WASHER 6mm FLAT SS	2
GA7800229 GOLDACRES		CLAAS CABIN, GPS ACCESS BAR	REV

Claas Cabin, Bracket, Fuse Box Cover Mount

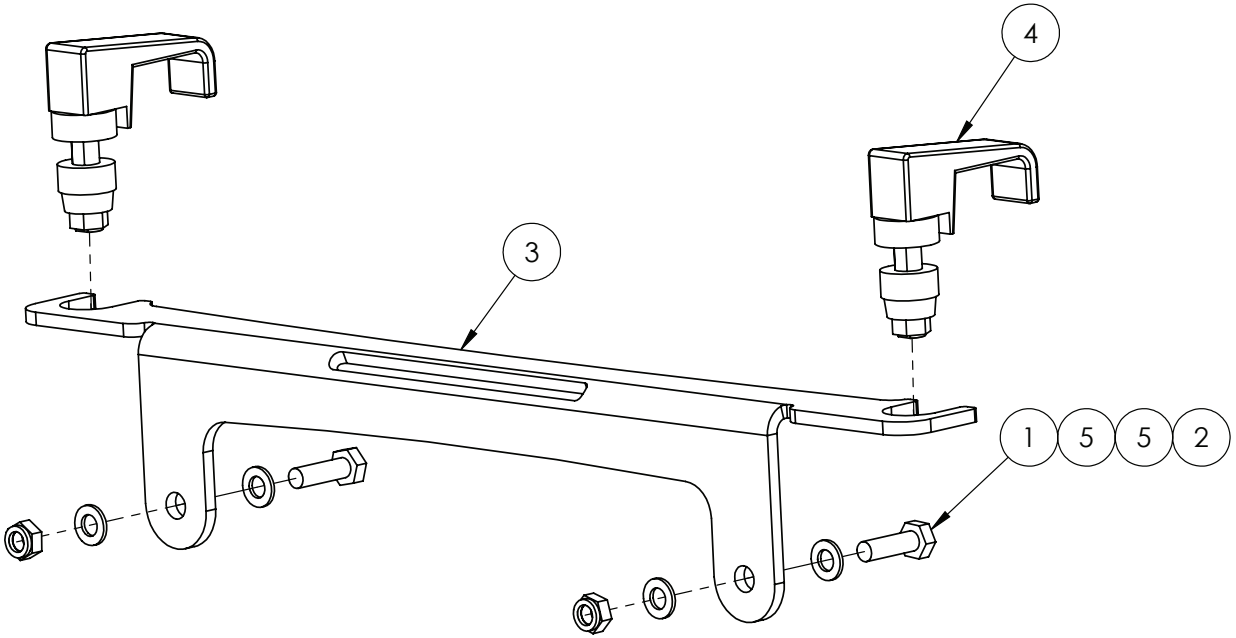

IF DESCRIPTION PREFIX IS ASSEMBLY DRAWING ONLY OR PRODUCTION DRAWING ONLY THE ITEM IS NOT FOR SALE			
ITEM	PART NUMBER	DESCRIPTION	QTY
1	GA5004065	BOLT M6 X 20 GR8.8 ZP	2
2	GA5048115	NUT M6 NYLOC ZP	2
3	GA4402220	PLATE, FUSE BOX LID MOUNT SUIT CLAAS CABIN	1
4	GA5066600	RAWL ACTION LATCH BLACK	2
5	GA5054170	WASHER 6mm FLAT SS	4
GA7800230 GOLDACRES		FUSE BOX COVER MOUNT	REV

Claas Cabin, Seat & Side Console

REPLACEMENT PARTS			
ITEM	PART NUMBER	DESCRIPTION	QTY
A	GA5071930	SEAT COVER, DRIVER AND TRAINING SEAT, SUIT CLAAS SEAT, G5 G6 MY15	-

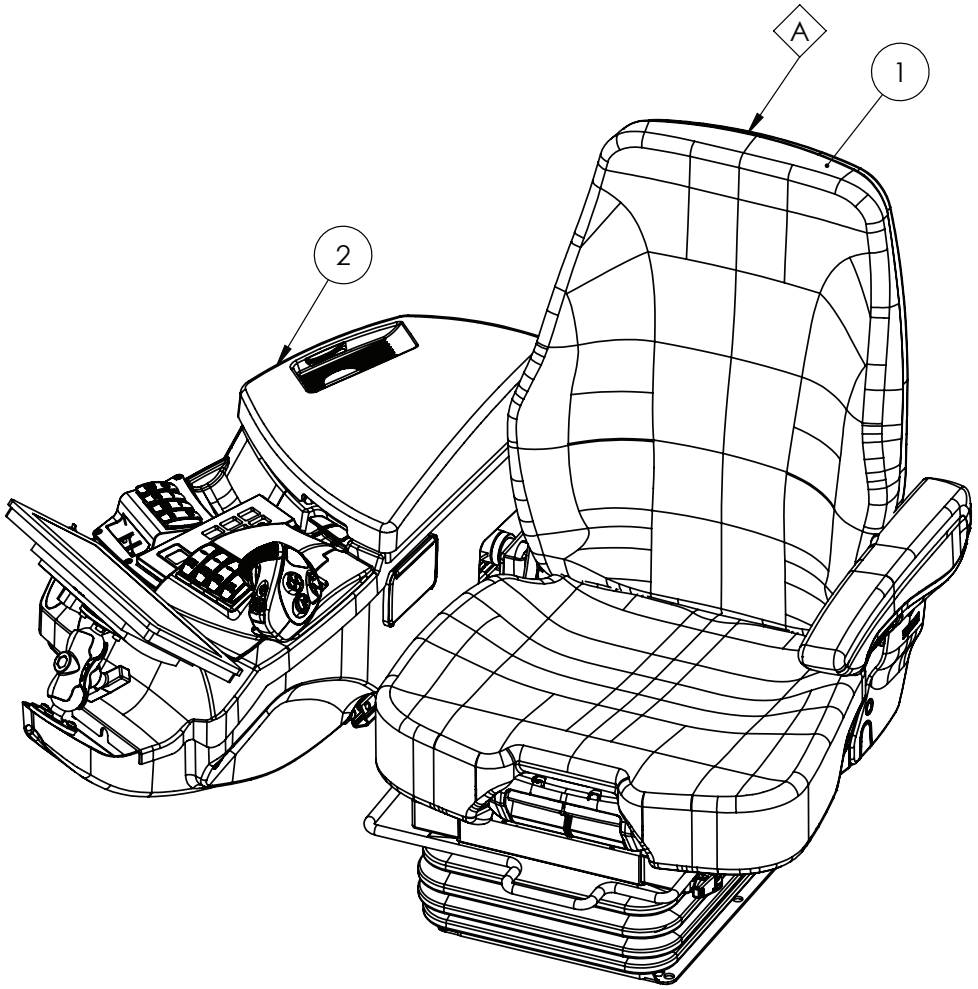

CONTINUE OVER PAGE

IF DESCRIPTION PREFIX IS ASSEMBLY DRAWING ONLY OR PRODUCTION DRAWING ONLY THE ITEM IS NOT FOR SALE			
ITEM	PART NUMBER	DESCRIPTION	QTY
1	GA5070385	SEAT, CABIN, ASSEMBLY WITH 12V AIR SUSPENSION, GRAMMER MSG95A/74, CLAAS	1
2	*	CONSOLE ASSEMBLY, CLAAS, G5 G6, MY15	1
GA7800231 GOLDACRES		CLAAS CABIN, SEAT & SIDE SONSOLE	REV 00

Claas Cabin, Seat, Upper Assembly

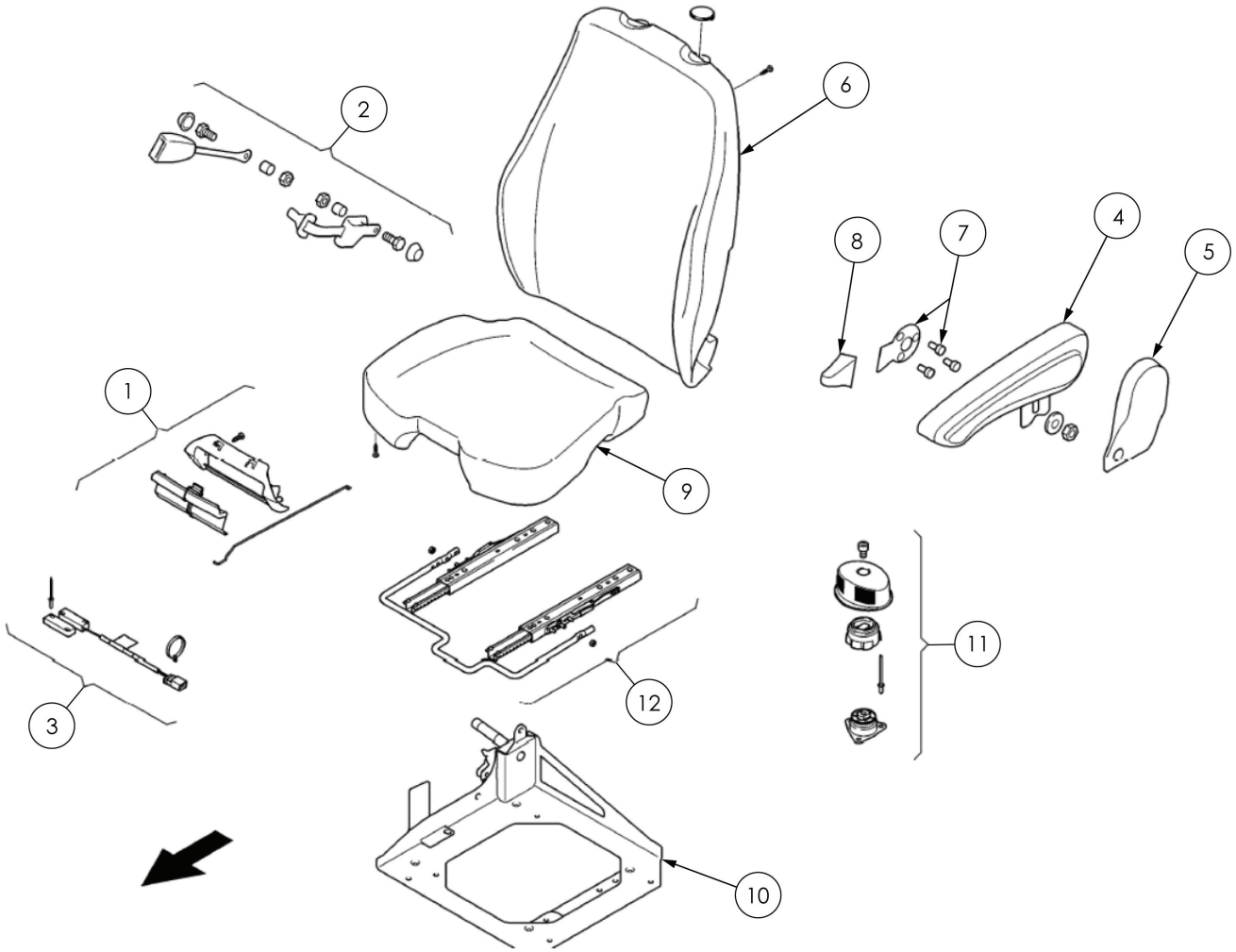

IF DESCRIPTION PREFIX IS ASSEMBLY DRAWING ONLY OR PRODUCTION DRAWING ONLY THE ITEM IS NOT FOR SALE			
ITEM	PART NUMBER	DESCRIPTION	QTY
1	GA5078557	HANDLE, FRONT ADJUSTMENT, CLAAS SEAT, 1139782.0	1
2	GA5078556	SEAT BELT BUCKLE, CLAAS SEAT, 0559791.0	1
3	GA5078558	SEAT SWITCH, CLAAS SEAT, 0559720.0	1
4	GA5079020	ARM REST, SUIT, CLAAS SEAT, 00 0546 102 0	1
5	GA5079021	COVER, ARM REST, SUIT, CLAAS SEAT, 00 0546 103 0	1
6	GA5079017	BACK REST, SUIT, CLAAS SEAT, 00 0559 914 0	1
7	GA5079019	ADAPTOR PLATE, SUIT, CLAAS SEAT ARM REST, 00 0565 233 0	1
8	GA5079018	HANDLE, ADAPTOR PLATE, SUIT, CLAAS SEAT, 00 0546 522 0	1
9	GA5079022	CUSHION, SUIT, CLAAS SEAT, 00 0559 749 1	1
10	GA5079025	ADAPTER BRACKET, SUIT, CLAAS SEAT, 00 0559 719 0	1
11	GA5079023	LEVER, ADJUSTMENT, SUIT, CLAAS SEAT, 00 0559 716 0	1
12	GA5079024	ADJUSTMENT BRACKET, SUIT, CLAAS SEAT, 00 0559 718 0	1
GA7800232 GOLDACRES		CLAAS SEAT, FULL ASSEMBLY, PARTS BREAKDOWN	REV

Claas Cabin, Seat, Lower Assembly

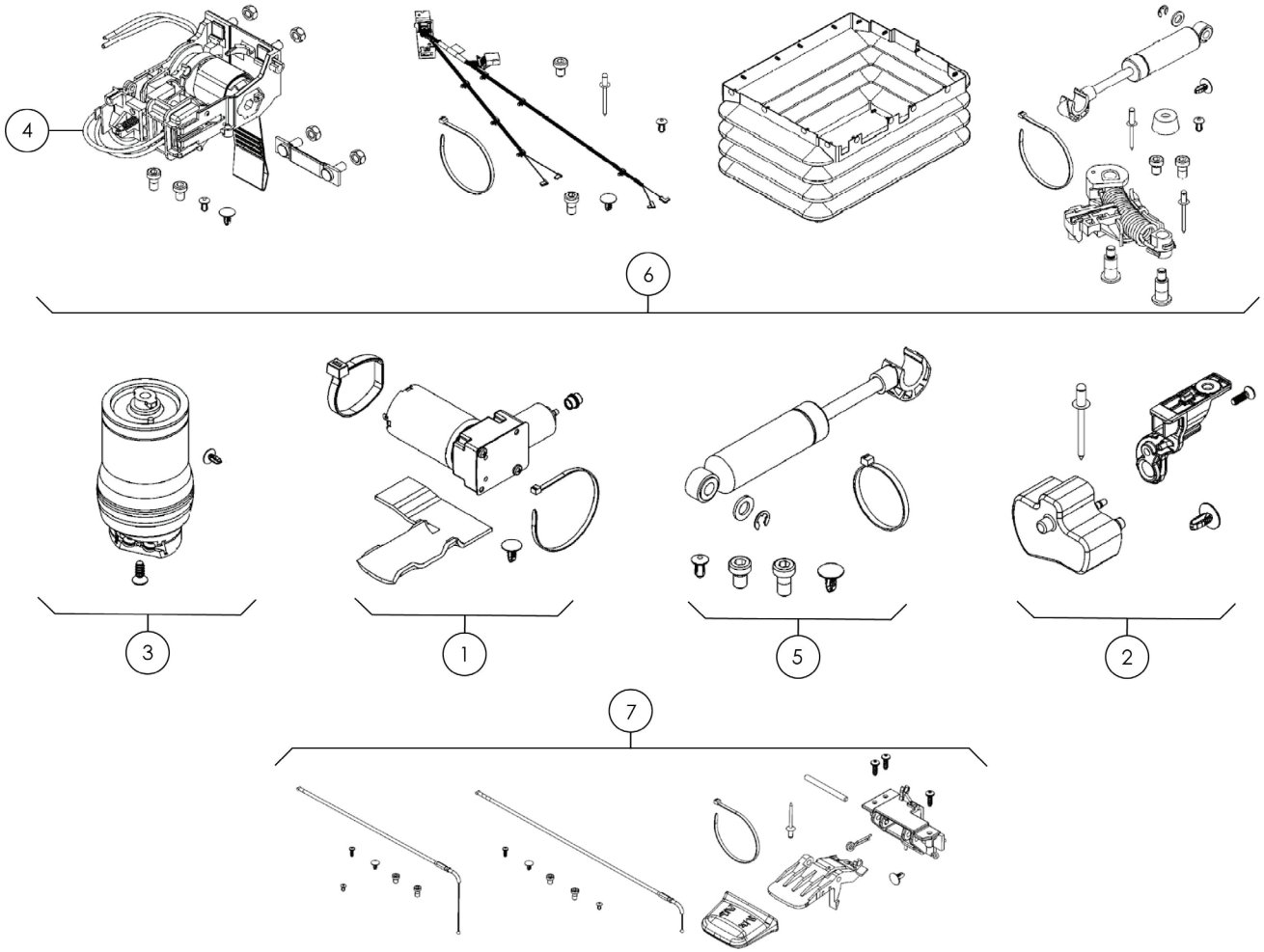

IF DESCRIPTION PREFIX IS ASSEMBLY DRAWING ONLY OR PRODUCTION DRAWING ONLY THE ITEM IS NOT FOR SALE			
ITEM	PART NUMBER	DESCRIPTION	QTY
1	GA5078562	AIR COMPRESSOR, CLAAS SEAT, 1139798.0	1
2	GA5078565	AIR OUTLET PANEL, CLAAS SEAT, 1158905.0	1
3	GA5078561	AIR SPRING, CLAAS SEAT, 1139799.0	1
4	GA5078560	LEVEL CONTROL MECHANISM, CLAAS SEAT, 1139828.0	1
5	GA5078563	SHOCK ABSORBER, CLAAS SEAT, 1139794.0	1
6	GA5078559	SUSPENSION KIT, CLAAS SEAT, 1139792.0	1
7	GA5078564	SWIVEL HANDLE KIT, CLAAS SEAT, 0536761.0	1
GA7800233 GOLDACRES		CLAAS SEAT, LOWER SECTION, PARTS BREAKDOWN	REV

Side Console, Gear Selector & Switch Panel

REPLACEMENT PARTS			
ITEM	PART NUMBER	DESCRIPTION	QTY
A	GA5025330	GAS STRUT, SIDE CONSOLE, CLAAS, 0565 733.0	1

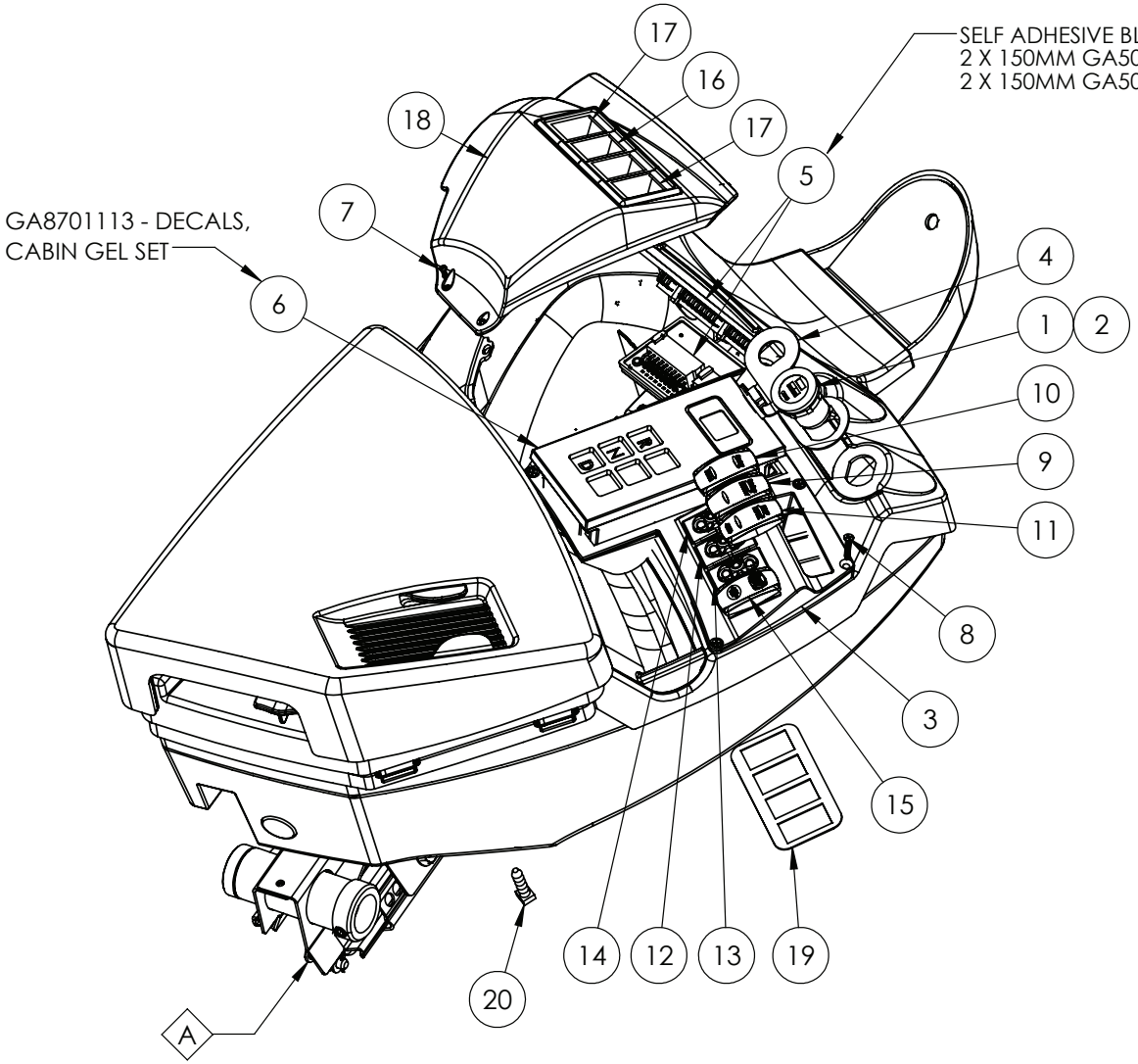

IF DESCRIPTION PREFIX IS ASSEMBLY DRAWING ONLY OR PRODUCTION DRAWING ONLY THE ITEM IS NOT FOR SALE			
ITEM	PART NUMBER	DESCRIPTION	QTY
1	GA3000084	AUXILIARY POWER SOCKET, DUAL USB, NARVA	1
2	GA3000470	AUXILIARY POWER SOCKET, DUAL USB, NARVA	1
3	GA5078543	CONSOLE PANEL, RH SIDE SWITCH AND GEAR SELECTOR, CLAAS	1
4	GA4525020	COVER PLATE, SUIT CLASS SIDE CONSOLE MY20	1
5	GA3000278	I/O MODULE, 16 CHANNEL, CR2012	2
6	GA3000076	PUSH BUTTON GEAR SELECTOR CONTROLLER, PROGRAMMED, ARENS	1
7	GA0500023	SCREW, 4G X 1/2", SELF TAPPING, PHILLIPS HEAD, SS	2
8	GA0500088	SCREW, 8G X 1/2", SELF TAPPING, COUNTERSUNK PHILLIPS, BLACK	5
9	GA3000354	SWITCH ACTUATOR, CRUISE, LASER ETCHED, G6 MY20	1
10	GA3000353	SWITCH ACTUATOR, SRAYROAD, LASER ETCHED, G6 MY20	1
11	GA3000887	SWITCH ACTUATOR, 4WD / DIFF LOCK LASER ETCHED, G4 MY24	1
12	GA3000343	SWITCH BODY, MOM/OFF, DPDT, 2P2T, BLUE LED	1
13	GA3000342	SWITCH BODY, MOM/OFF/MOM, DPDP, 2P2T, BLUE LED	1
14	GA3000344	SWITCH BODY, ON/ON, 2P2T, BLUE LED, NO ACTUATOR, CARLING	1
15	GA3000362	SWITCH CARLING, LOCKING, PARK BRAKE, CONTURA V, G6 MY20	1
16	GA5006387	SWITCH HOUSING CENTRE	2
17	GA5006397	SWITCH HOUSING END	2
18	GA5072140	SWITCH PANEL, SIDE CONSOLE, G5 G6 G8, CLAAS CONSOLE	1
19	GA4525105	SWITCH RETAINING PLATE SUIT MY20 G6 SIDE CONSOLE	1
20	GA5069385	WALL PLUG XMAS TREE 6mm X 30mm BLACK	4
GA4949471 GOLDACRES		CONSOLE ASSEMBLY, CLAAS, G4, MY24	REV 01.B

Side Console, Boom Switches

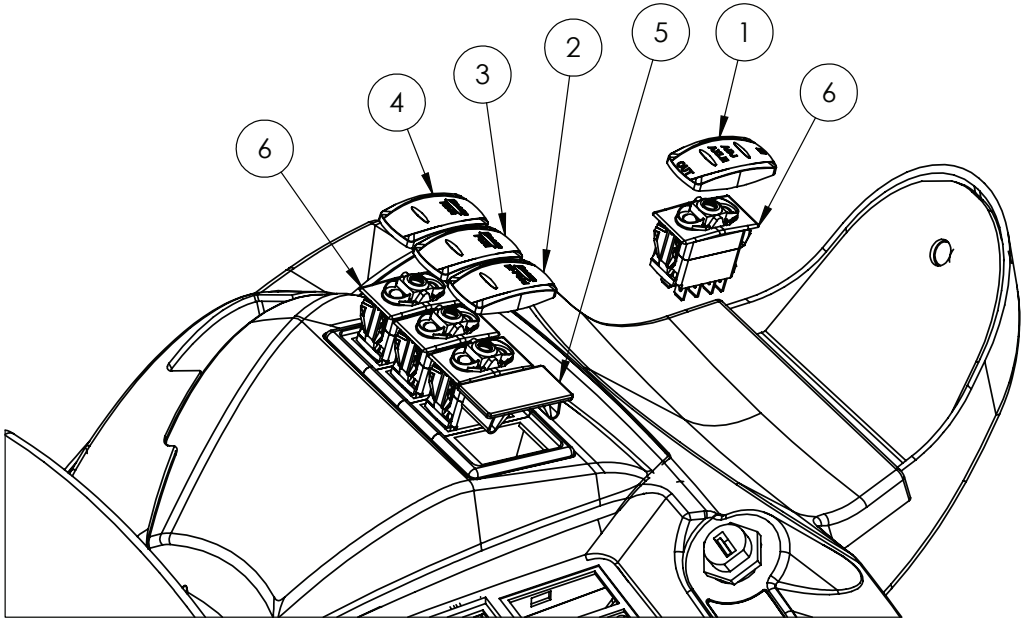

IF DESCRIPTION PREFIX IS ASSEMBLY DRAWING ONLY OR PRODUCTION DRAWING ONLY THE ITEM IS NOT FOR SALE			
ITEM	PART NUMBER	DESCRIPTION	QTY
1	GA3000886	SWITCH ACTUATOR, ADJ AXLE LASER ETCHED, G4 MY24	1
2	GA3000350	SWITCH ACTUATOR, BIFOLD, LASER ETCHED, G6 MY20	1
3	GA3000349	SWITCH ACTUATOR, FOLD, LASER ETCHED, G6 MY20	1
4	GA3000352	SWITCH ACTUATOR, REST, LASER ETCHED, G6 MY20	1
5	GA5006421	SWITCH BLANK HOLE PANEL	2
6	GA3000342	SWITCH BODY, MOM/OFF/MOM, DPDP, 2P2T, BLUE LED	4
7	GA5004053	BHCS M6 X 20 SS A2-70	1
8	GA3000470	AUXILIARY POWER SOCKET, DUAL USB, NARVA	1
GA4949471 GOLDACRES		CONSOLE ASSEMBLY, CLAAS, G4, MY24	REV 01.B

Side Console, G-Hub Display Assembly

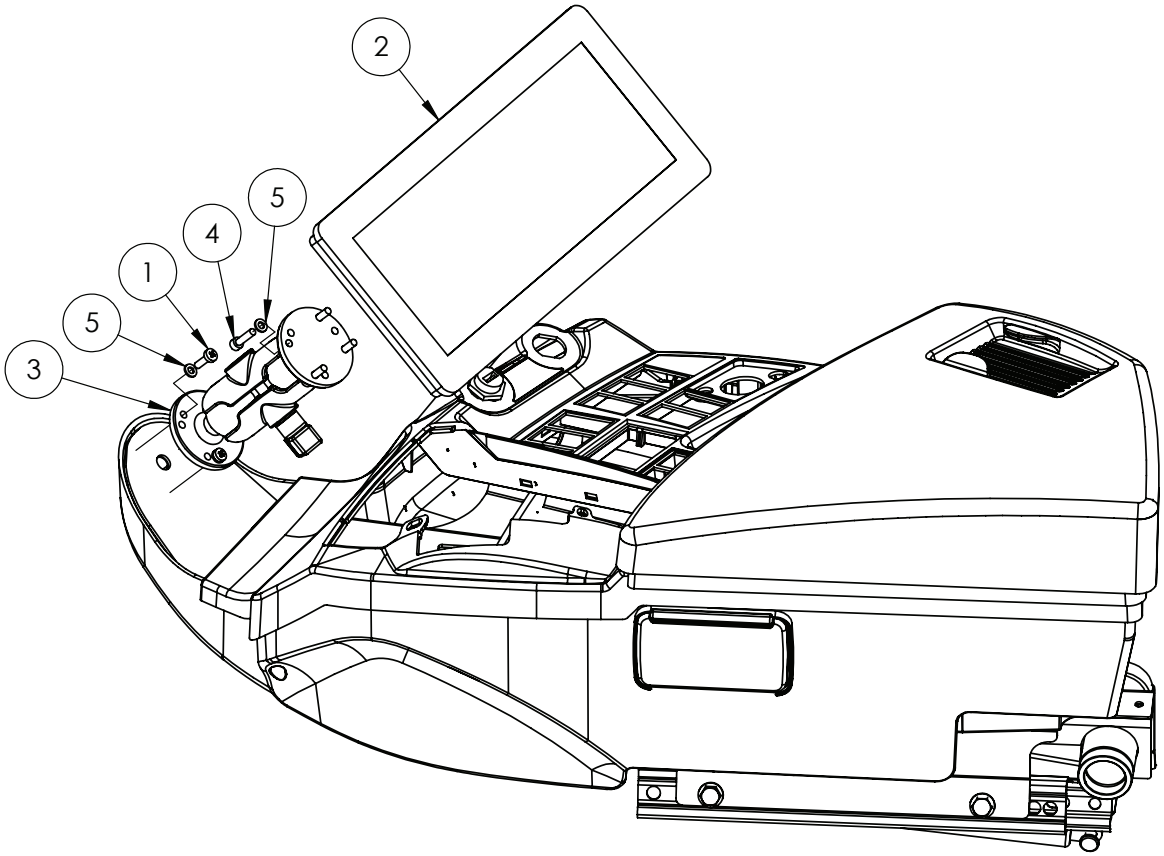

IF DESCRIPTION PREFIX IS ASSEMBLY DRAWING ONLY OR PRODUCTION DRAWING ONLY THE ITEM IS NOT FOR SALE			
ITEM	PART NUMBER	DESCRIPTION	QTY
1	GA5003977	BOLT PAN HEAD M5 X 16 SS A2-70	3
2	GA3000905	DISPLAY SCREEN, 12", TOUCH, CR1203, IFM, G4	1
3	GA5020826	RAM MOUNT, UNIVERSAL, ADJUSTABLE, C SIZE 1.5" BALL, 5.24", WITH ROUND MOUNTS, RAM-101U-B	1
4	GA5003581	SHCS M5 X 20 SS A2-70	4
5	GA5003983	WASHER 5mm FLAT SS	7
6	GA3000470	AUXILIARY POWER SOCKET, DUAL USB, NARVA	1
GA4949471 GOLDACRES		CONSOLE ASSEMBLY, CLAAS, G4, MY24	REV 01.C

Side Console, Joystick Assembly

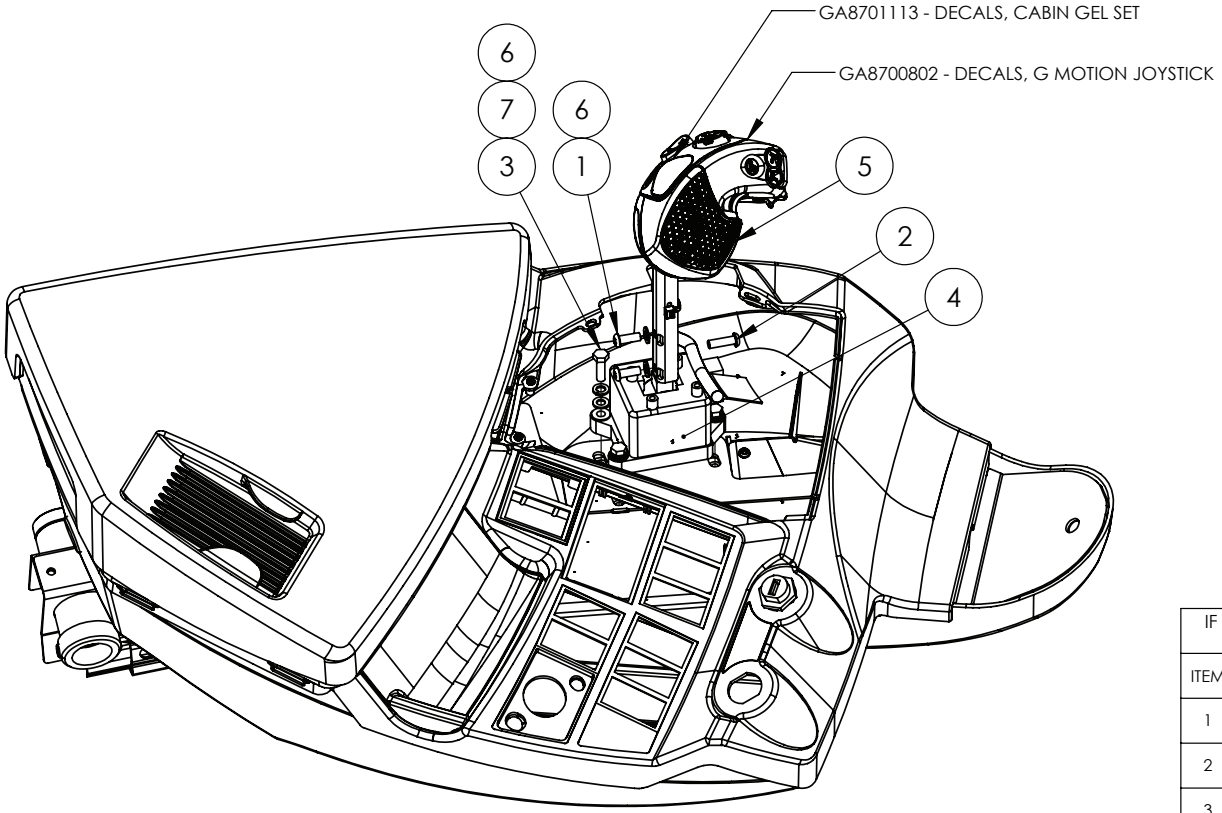

IF DESCRIPTION PREFIX IS ASSEMBLY DRAWING ONLY OR PRODUCTION DRAWING ONLY THE ITEM IS NOT FOR SALE			
ITEM	PART NUMBER	DESCRIPTION	QTY
1	GA5004050	BHCS M6 X 16 SS A2-70	2
2	GA5004053	BHCS M6 X 20 SS A2-70	1
3	GA5004065	BOLT M6 X 20 GR8.8 ZP	3
4	GA3000107	HAND THROTTLE CONTROL CLAAS	1
5	GA3000071	JOYSTICK, MULTI FUNCTION, ERGONOMIC, CLAAS	1
6	GA5004437	WASHER 6mm FLAT SS	5
7	GA5004447	WASHER 6mm SPRING SS	3
8	GA3000470	AUXILIARY POWER SOCKET, DUAL USB, NARVA	1
GA4949471 GOLDACRES		CONSOLE ASSEMBLY, CLAAS, G4, MY24	REV 01.B

Cabin Foot Rest

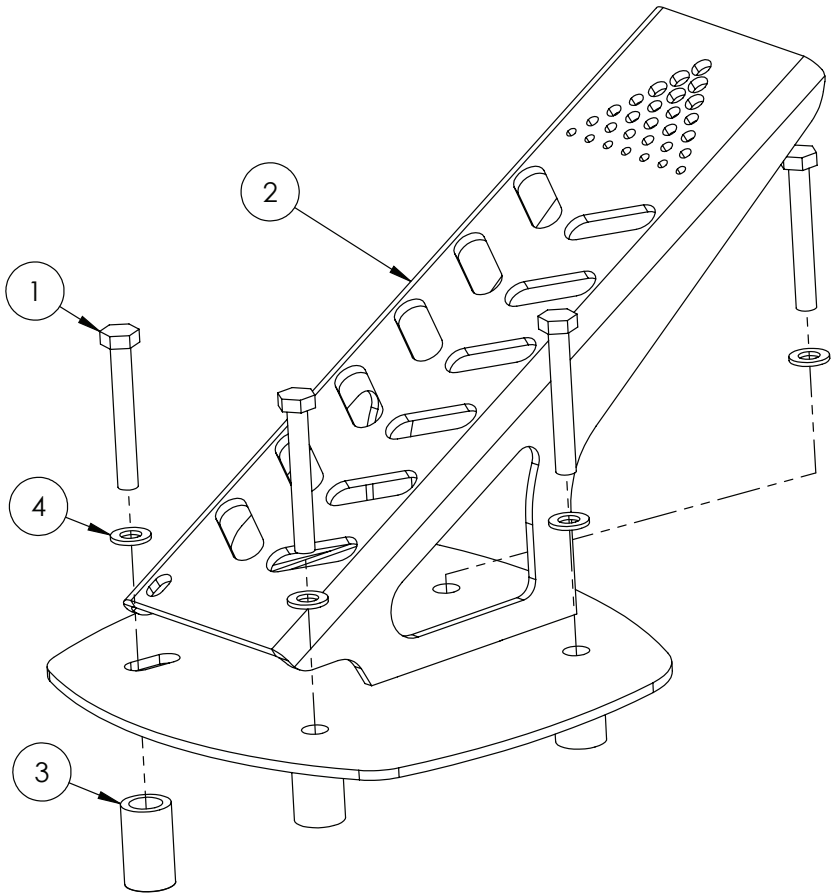

IF DESCRIPTION PREFIX IS ASSEMBLY DRAWING ONLY OR PRODUCTION DRAWING ONLY THE ITEM IS NOT FOR SALE			
ITEM	PART NUMBER	DESCRIPTION	QTY
1	GA5007099	BOLT M6 X 45 GR8.8 ZP	4
2	GA4658680	CABIN LEFT FOOT REST	1
3	GA4583150	CRUSH TUBE - 15 OD X 10 ID X 25 LONG	1
4	GA5054170	WASHER 6mm FLAT SS	4
GA7800234 GOLDACRES		CABIN FOOT REST	REV 00

Pedal Assembly

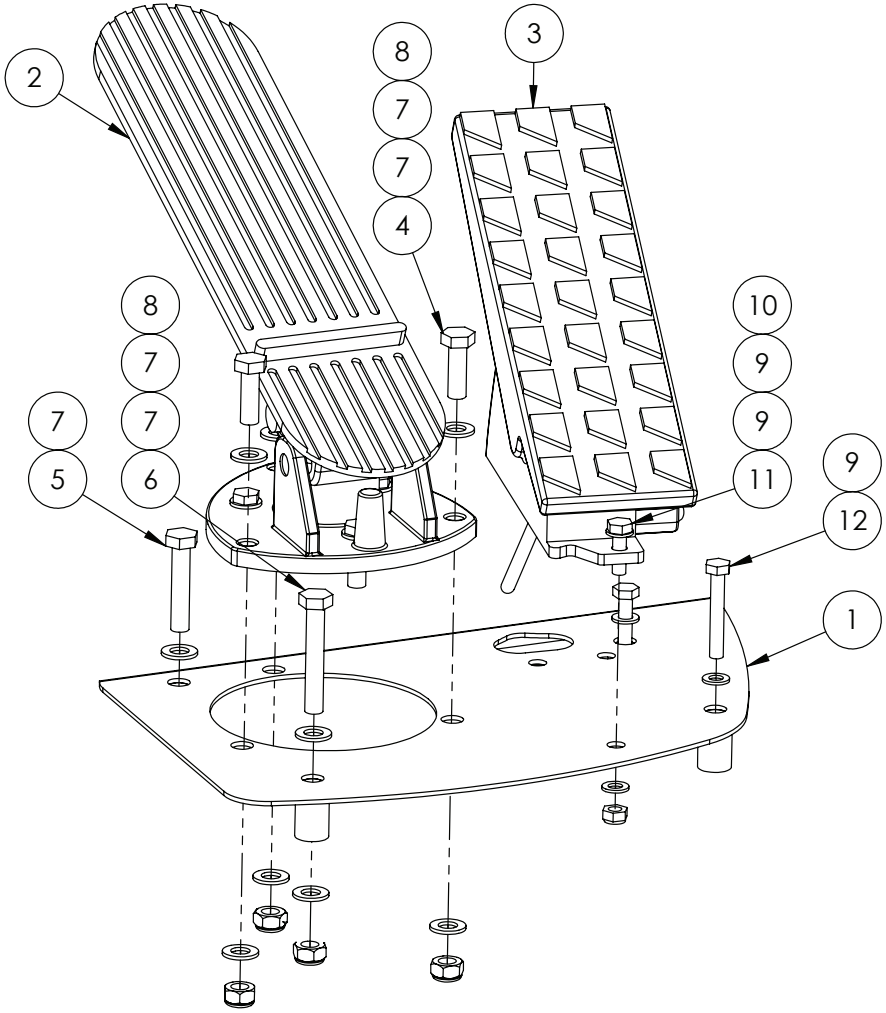

IF DESCRIPTION PREFIX IS ASSEMBLY DRAWING ONLY OR PRODUCTION DRAWING ONLY THE ITEM IS NOT FOR SALE			
ITEM	PART NUMBER	DESCRIPTION	QTY
1	GA4658681	BRAKE THROTTLE PEDAL MOUNT	1
2	GA5016965	TREADLE ASSEMBLY, BRAKE PEDAL, AIR	1
3	GA5065460	THROTTLE PEDAL ELECTRONIC, FOOT, WITH IDLE VALIDATION	1
4	GA5004711	BOLT M8 X 25 GR8.8 ZP	3
5	GA5048655	BOLT M8 X 40 GR8.8 ZP	1
6	GA5004727	BOLT M8 X 50 GR8.8 ZP	1
7	GA5003643	WASHER 8mm FLAT SS HD	9
8	GA5004917	NUT M8 NYLOC ZP	4
9	GA5004437	WASHER 6mm FLAT SS	8
10	GA5048115	NUT M6 NYLOC ZP	3
11	GA5004065	BOLT M6 X 20 GR8.8 ZP	3
12	GA5004081	BOLT M6 X 40 GR8.8 ZP	2
GA4906210 GOLDACRES		CABIN PEDAL ASSEMBLY	REV

Brake Unit, Foot Valve Assembly, Air Actuated

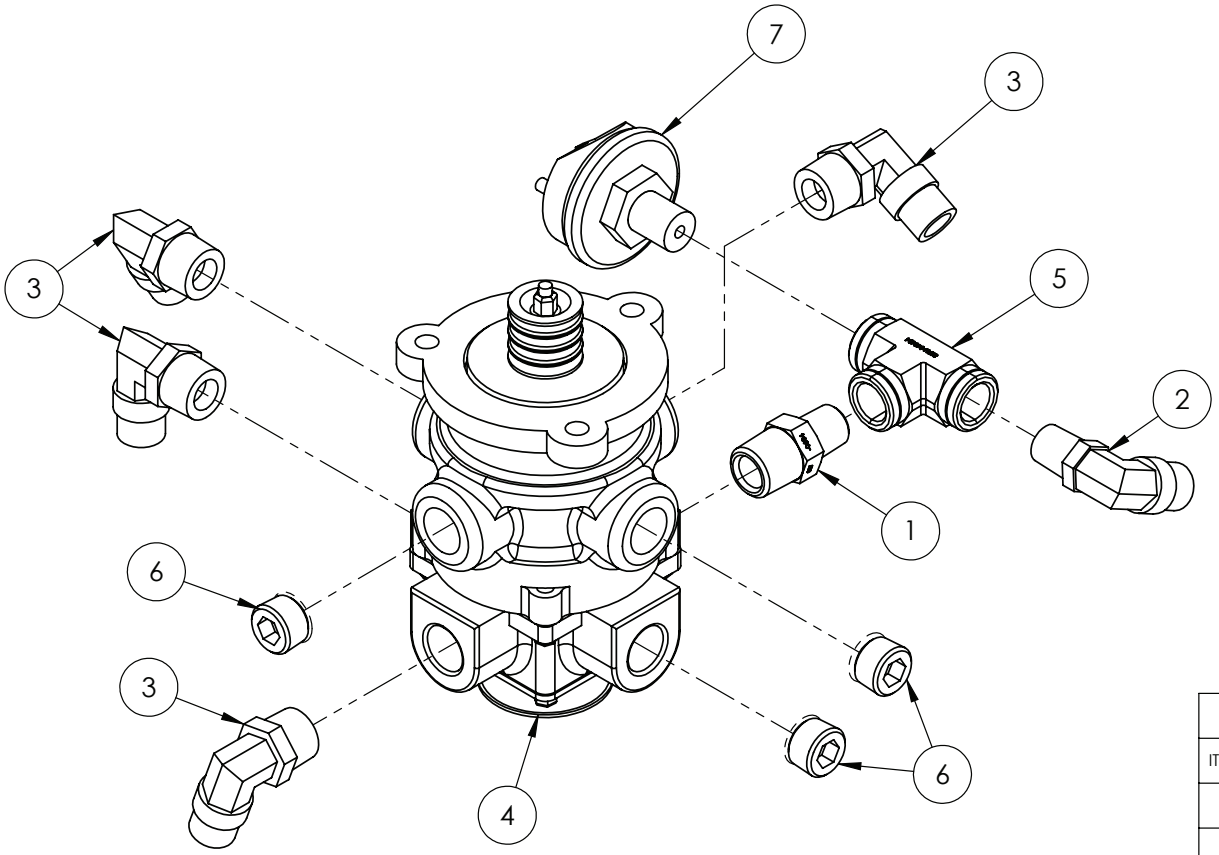

NOTE: USE THREAD SEALANT IF NOT ALLREADY APPLIED TO FITTINGS

IF DESCRIPTION PREFIX IS ASSEMBLY DRAWING ONLY OR PRODUCTION DRAWING ONLY THE ITEM IS NOT FOR SALE			
ITEM	PART NUMBER	DESCRIPTION	QTY
1	GA3500220	0604 NIPPLE, S27-0604	1
2	GA5078518	AIR FITTING, ELBOW, SWIVEL, 3/8" TUBE, 1/4" NPT MALE, PUSH IN, BRASS, ALKON - AQ69-DOTS-6X4	1
3	GA5078676	AIR FITTING, ELBOW, SWIVEL, 3/8" TUBE, 3/8" NPT MALE, PUSH IN, BRASS, ALKON - AQ69-DOTS-6X6	4
4	GA5005769	BASIC FOOT VALVE, DUAL CIRCUIT	1
5	GA3501313	HYDRAULIC ADAPTOR, TEE, 1/4" NPT FEMALE X 1/4" NPT FEMALE X 1/4" NPT FEMALE, S29N-040404	1
6	GA5078990	PLUG, 3/8 NPT, FLUSH MOUNT, ALLEN KEY, 10AL-6	3
7	GA5016081	PRESSURE SWITCH, STOP LIGHT, 3-5 PSI ACTUATION, NORMALLY OPEN, SPST, 1/4"	1
GA4951870 GOLDACRES		BRAKE UNIT, AIR ACTUATED, PEDDAL OPERATED, G4, S2	REV

Claas Cabin, Carbon Filter Assembly, 12v, Ultraguard (Up to S/N 105885)

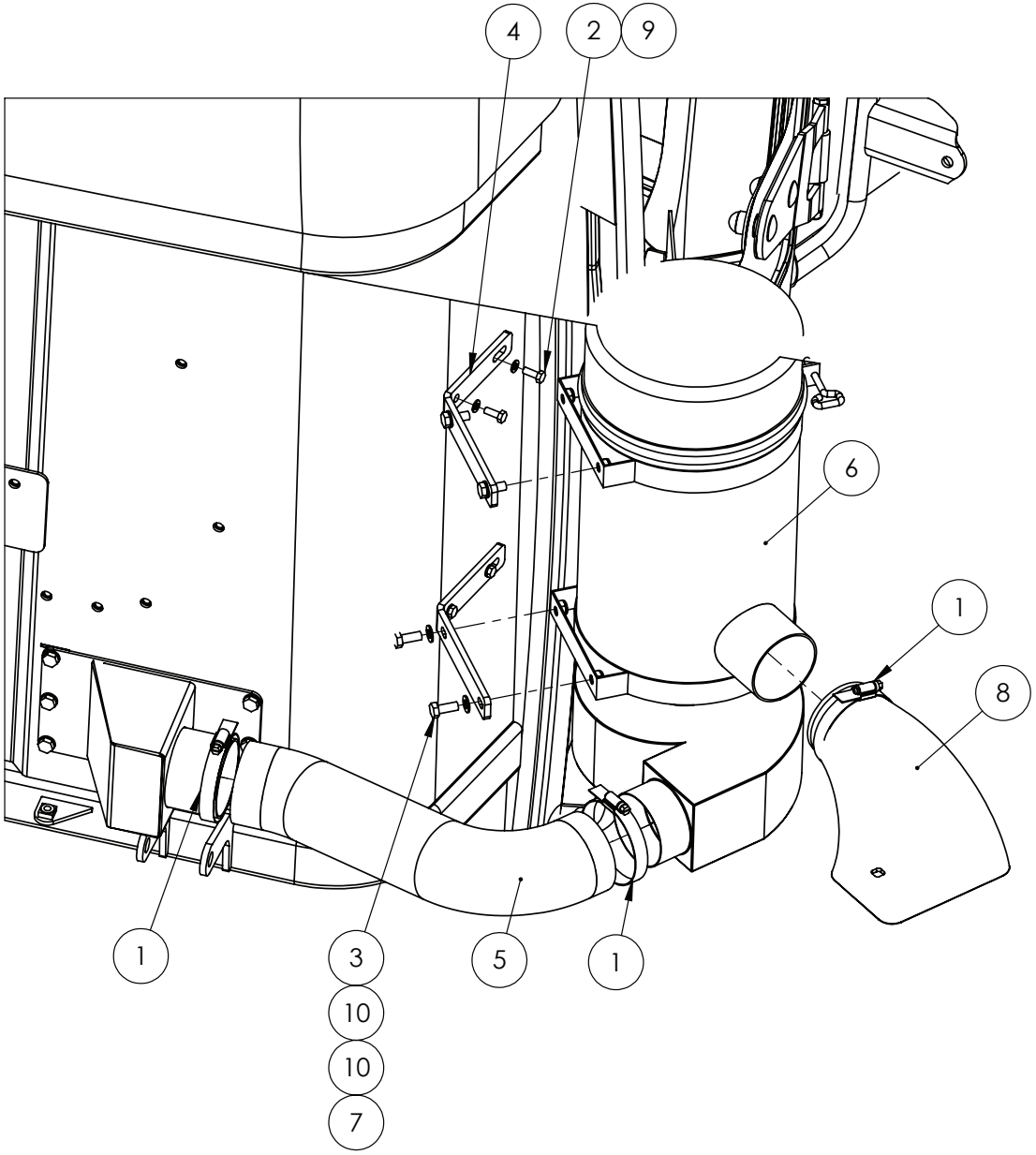

IF DESCRIPTION PREFIX IS ASSEMBLY DRAWING ONLY OR PRODUCTION DRAWING ONLY THE ITEM IS NOT FOR SALE			
ITEM	PART NUMBER	DESCRIPTION	QTY
1	GA5004241	60-80mm S/S 31/2 HOSE CLAMPS	3
2	GA5011395	BOLT M6 X 16 SS A2-70	4
3	GA5004085	BOLT M8 X 20 GR8.8 ZP	4
4	GA4406015	BRACKET, CARBON FILTER MOUNT, CLAAS, G6 MY20	2
5	GA5016849	DUCT 3" TPRDS	1
6	GA5066741	EXTERNAL MOUNT 12V ULTRGUARD CARBON FILTER	1
7	GA5004917	NUT M8 NYLOC ZP	4
8	GA5002179	RAM AIR INTAKE CARBON FILTER	1
9	GA5004437	WASHER 6mm FLAT SS	4
10	GA5003643	WASHER 8mm FLAT SS HD	8
GA7800235 GOLDACRES		CARBON FILTER, CLAAS CABIN	REV

Claas Cabin, Carbon Filter, 12v, Ultraguard (Up to S/N 105885)

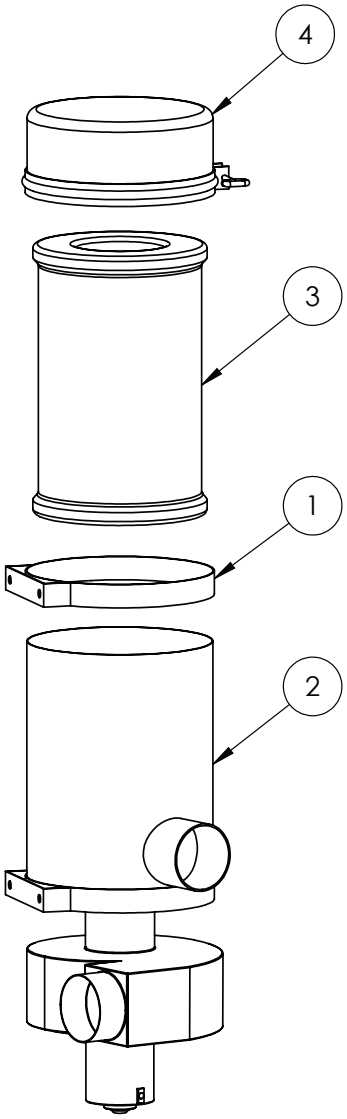

REPLACEMENT PARTS			
ITEM	PART NUMBER	DESCRIPTION	QTY
-	GA5025795	WINGNUT, SUIT, ULTRAGUARD CARBON FILTER, GA5025740	1

IF DESCRIPTION PREFIX IS ASSEMBLY DRAWING ONLY OR PRODUCTION DRAWING ONLY THE ITEM IS NOT FOR SALE			
ITEM	PART NUMBER	DESCRIPTION	QTY
1	GA5025785	BELT, BRACKET, SUIT, ULTRAGUARD CARBON FILTER, GA5066741 & GA5025740	2
2	GA5025930	BODY, FILTER BARREL, SUIT, 12V ULTRAGUARD, SUIT, GA5066741	1
3	GA5066740	CARBON FILTER INSERT SUIT DONALDSON	1
4	GA5025934	LID, SUIT, CARBON FILTER, ULTRAGUARD, GA5066741	1
GA5066741 GOLDACRES		CARBON FILTER, EXTERNAL MOUNT, 12V, ULTRAGUARD, MY11 - MY23	REV 01.B

Claas Cabin, Carbon Filter, 12v, Ultraguard (From S/N 105886)

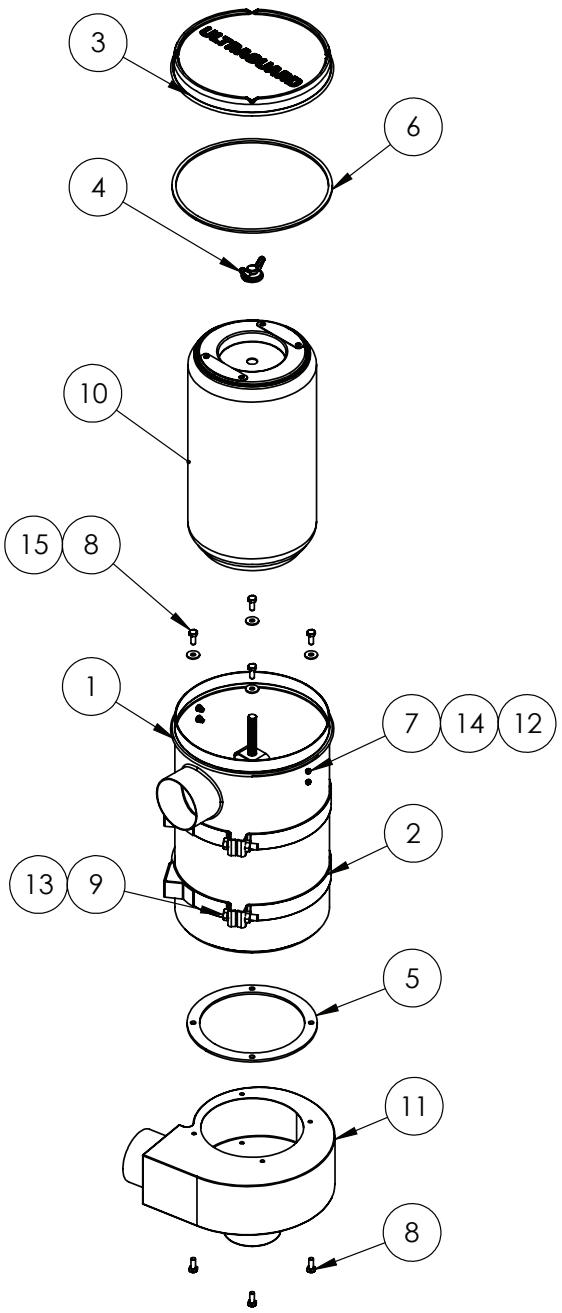

IF DESCRIPTION PREFIX IS ASSEMBLY DRAWING ONLY OR PRODUCTION DRAWING ONLY THE ITEM IS NOT FOR SALE			
ITEM	PART NUMBER	DESCRIPTION	QTY
1	GA5025780	BODY, FILTER BARREL, SUIT, ULTRAGUARD CARBON FILTER, GA5025740	1
2	GA5025785	BELT, BRACKET, SUIT, ULTRAGUARD CARBON FILTER, GA5025740	2
3	GA5025790	LID, SUIT, ULTRAGUARD CARBON FILTER, GA5025740	1
4	GA5025795	WINGNUT, SUIT, ULTRAGUARD CARBON FILTER, GA5025740	1
5	GA5025800	GASKET, FAN BLOWER, SUIT, ULTRAGUARD CARBON FILTER, GA5075740	1
6	GA5025805	GASKET, LID, SUIT, ULTRAGUARD CARBON FILTER, GA5075740	1
7	GA5051040	BOLT M4 X 16 SS A2-70	4
8	GA5004041	BOLT M6 X 16 GR8.8 ZP	8
9	GA5048655	BOLT M8 X 40 GR8.8 ZP	2
10	GA5066740	CARBON FILTER, REPLACEMENT INSERT SUIT DONALDSON	1
11	GA5026289	FAN, BLOWER, 12V, ULTRAGUARD, SUIT, GA5025740, MY24 ON	1
12	GA5049025	NUT M4 NYLOC SS	4
13	GA5011499	NUT M8 HEX ZP	2
14	GA5020510	WASHER M4 FLAT SS	4
15	GA5004437	WASHER M6 FLAT SS	4
GA5025740 GOLDACRES		CARBON FILTER, 12V, ULTRAGUARD, MY24 ON	REV 00

18 - Brakes

Brake Booster Mounting

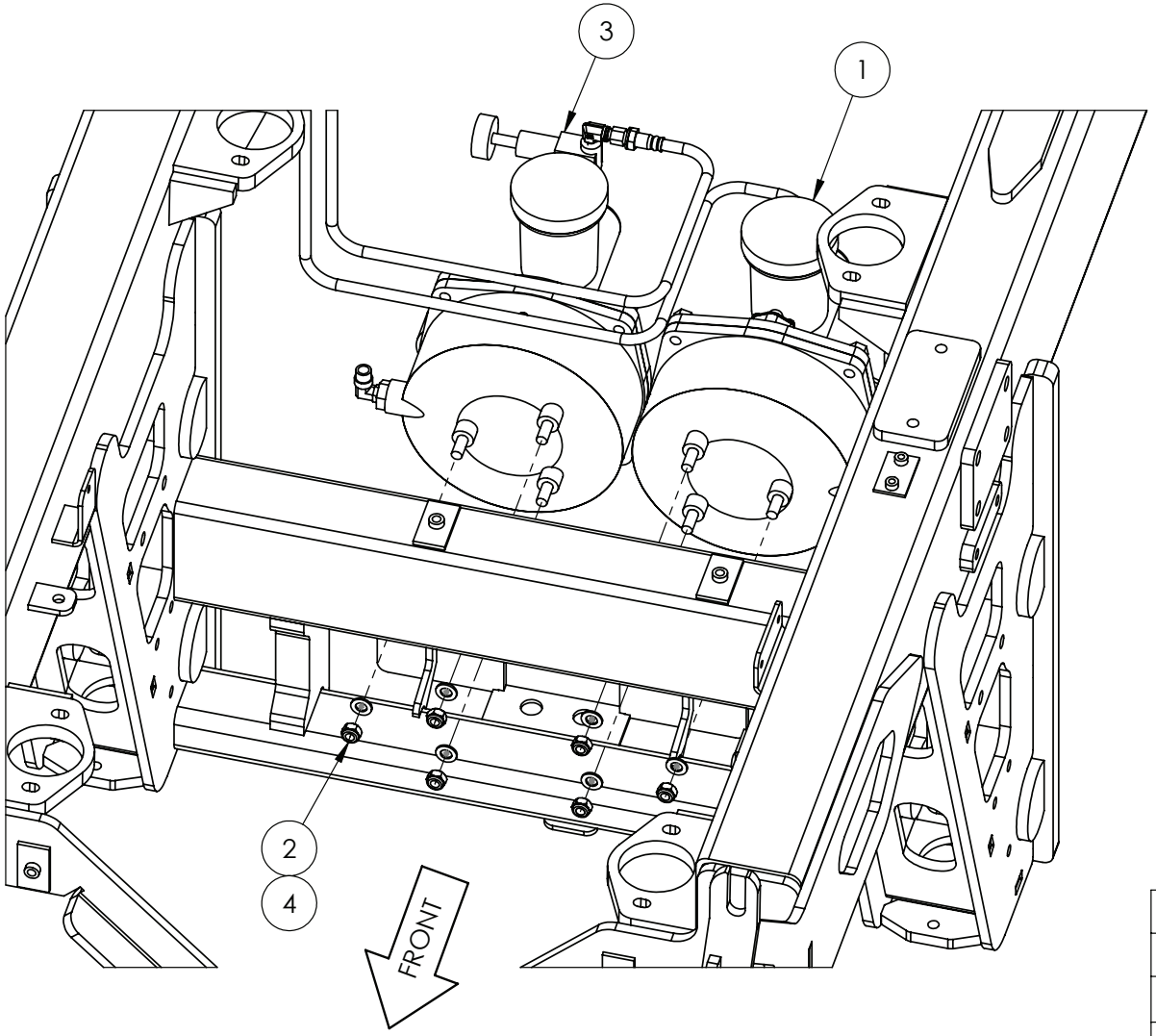

IF DESCRIPTION PREFIX IS ASSEMBLY DRAWING ONLY OR PRODUCTION DRAWING ONLY THE ITEM IS NOT FOR SALE			
ITEM	PART NUMBER	DESCRIPTION	QTY
1	GA4953170	ASSEMBLY DRAWING ONLY. BRAKE BOOSTER ASSEMBLY G4 S2 MY24	1
2	GA5000141	NUT M10 NYLOC ZP	6
3	GA4909499	PRODUCTION DRAWING ONLY. REAR BRAKE BOOSTER ASSEMBLY G4 S2 MY24	1
4	GA5000117	WASHER 10mm FLAT SS HD	6
GA7800189 GOLDACRES		ASSEMBLY DRAWING ONLY, BRAKE BOOSTERS, CHASSIS MOUNT, G4 S2, MY24	REV 00.B

Brake Booster Assembly, Right Hand Orientation

RIGHT HAND ORIENTATION

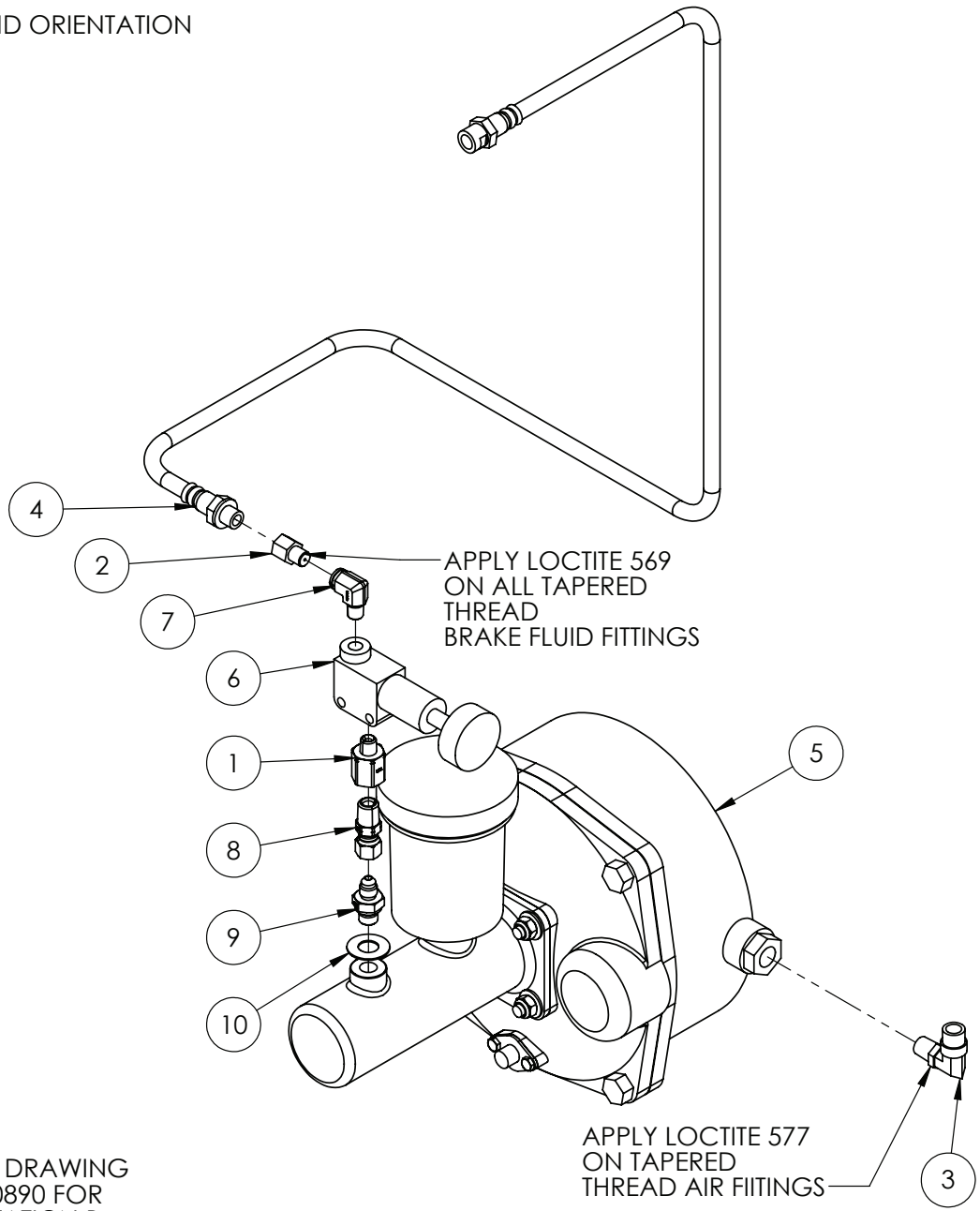

REFER TO DRAWING
GA5070890 FOR
ORIENTATION B

IF DESCRIPTION PREFIX IS ASSEMBLY DRAWING ONLY OR PRODUCTION DRAWING ONLY THE ITEM IS NOT FOR SALE			
ITEM	PART NUMBER	DESCRIPTION	QTY
1	GA3501810	0204 1/8 NPT MALE TO 1/4 NPT FEMALE, ADAPTOR, S72N-0204	1
2	GA5025905	ADAPTOR, 1/8 NPT MALE TO M12 X 1.5 INVERTED SEAT FEMALE, STAINLESS	1
3	GA5078518	AIR FITTING, ELBOW, SWIVEL, 3/8" TUBE, 1/4" NPT MALE, PUSH IN, BRASS, ALKON - AQ69-DOTS-6X4	1
4	GA5025922	BRAIDED BRAKE HOSE, BOOSTER TO CHASSIS, DOT 4	1
5	GA5070890	BRAKE BOOSTER CATAI 2013 CROP CRUISER	1
6	GA5079223	BRAKE PROPORTIONING VALVE, DOT 4, 1/8 THREAD.	1
7	GA3501811	HYDRAULIC ADAPTOR, ELBOW, 90 DEGREE, 1/8" NPT MALE X 1/8" NPT FEMALE, S25N-0202	1
8	GA3501812	HYDRAULIC ADAPTOR, NIPPLE, 1/4" NPT MALE X 7/16" JIC FEMALE SWIVEL, S61-0407	1
9	GA5077885	HYDRAULIC ADAPTOR, NIPPLE, 7/16" JIC MALE X M12 X 1.5 MALE	1
10	GA5007475	WASHER 12 X 22mm COPPER	1
GA4909499 GOLDACRES		ASSEMBLY DRAWING ONLY. BRAKE BOOSTER ASSEMBLY G4 S2 MY24	REV 00

Brake Booster Assembly, Left Hand Orientation

LEFT HAND ORIENTATION

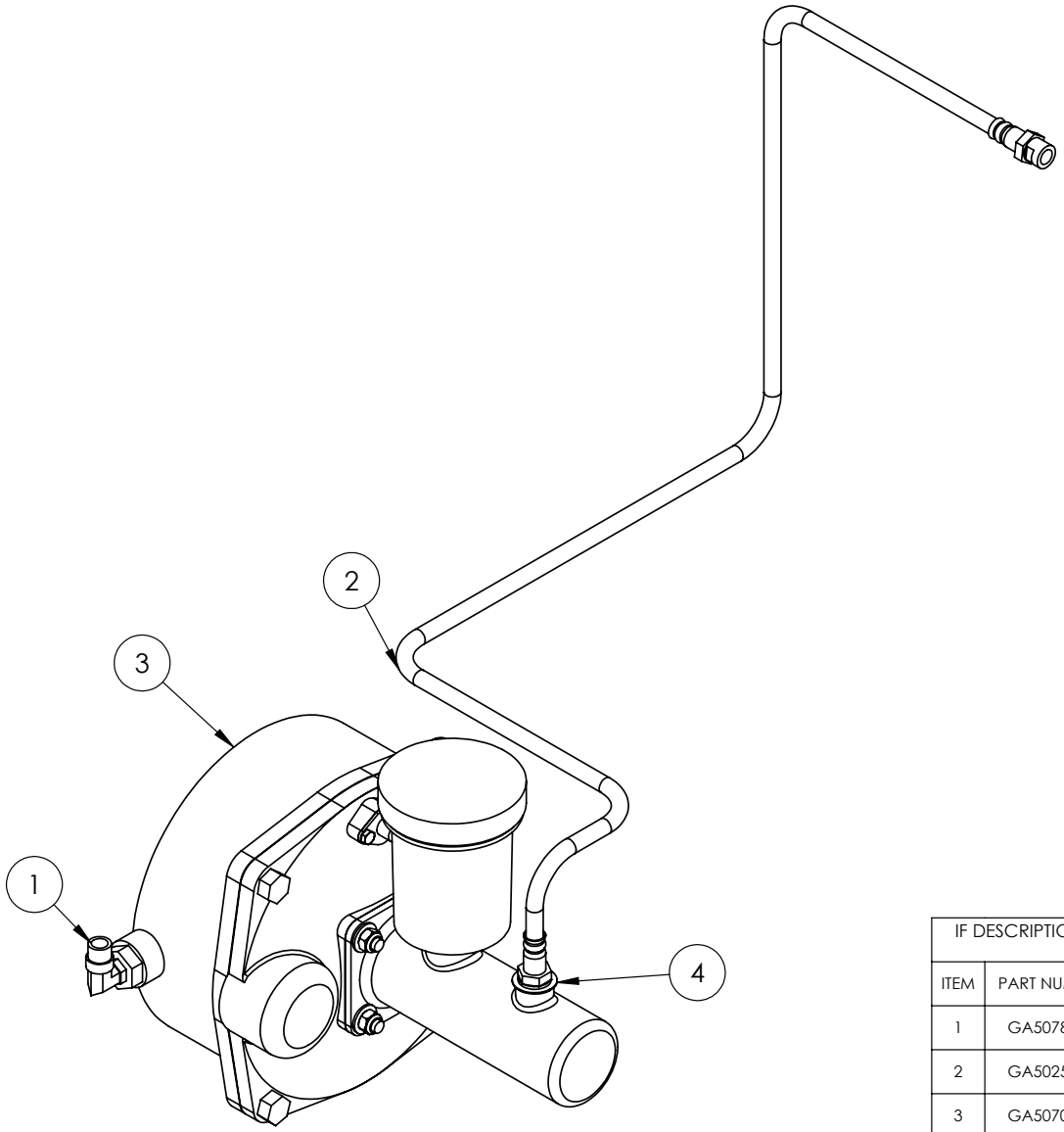

REFER TO DRAWING GA5070890 FOR ORIENTATION C

IF DESCRIPTION PREFIX IS ASSEMBLY DRAWING ONLY OR PRODUCTION DRAWING ONLY THE ITEM IS NOT FOR SALE			
ITEM	PART NUMBER	DESCRIPTION	QTY
1	GA5078518	AIR FITTING, ELBOW, SWIVEL, 3/8" TUBE, 1/4" NPT MALE, PUSH IN, BRASS, ALKON - AQ69-DOTS-6X4	1
2	GA5025922	BRAIDED BRAKE HOSE, BOOSTER TO CHASSIS, DOT 4	1
3	GA5070890	BRAKE BOOSTER CATAI 2013 CROP CRUISER	1
4	GA5007475	WASHER 12 X 22mm COPPER	1
GA4953170 GOLDACRES		ASSEMBLY DRAWING ONLY. BRAKE BOOSTER ASSEMBLY G4 S2 MY24	REV 00

Brake Booster Assembly, Orientation B

ORIENTATION B

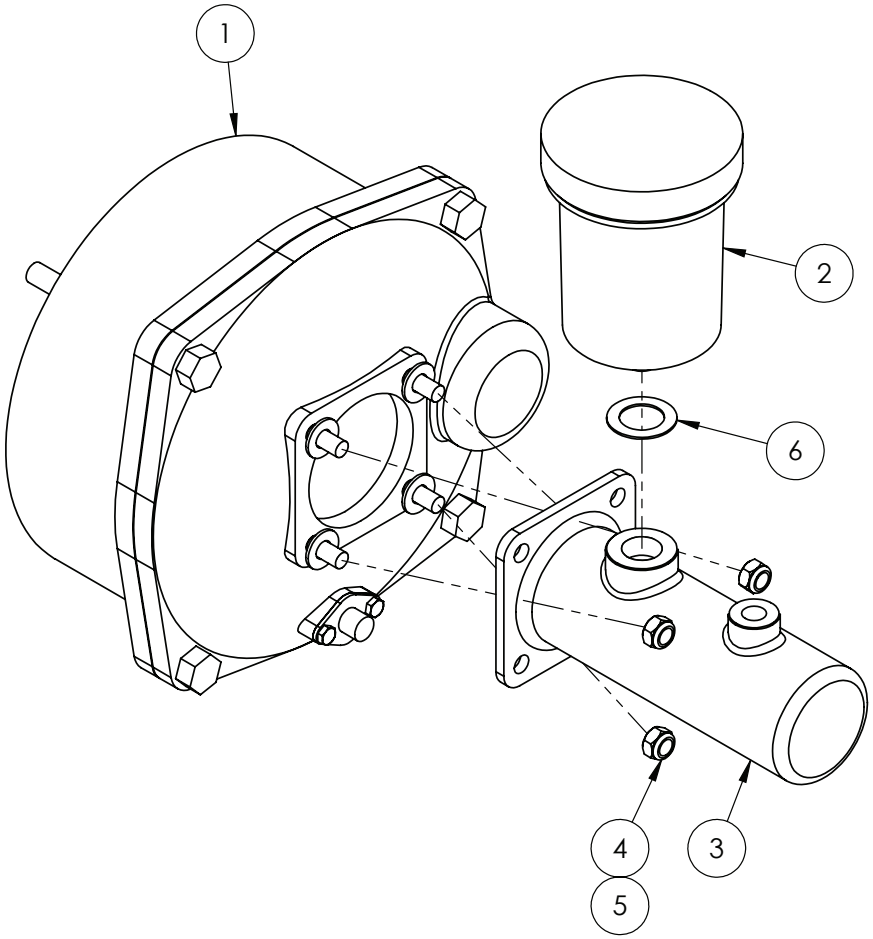

IF DESCRIPTION PREFIX IS ASSEMBLY DRAWING ONLY OR PRODUCTION DRAWING ONLY THE ITEM IS NOT FOR SALE			
ITEM	PART NUMBER	DESCRIPTION	QTY
1	GA5025898	BRAKE BOOSTER BODYBOOSTER, BRAKE, CATAI, 000.301	1
2	GA5071745	BOWEL, OIL, BRAKE BOOSTER, CATAI, 000.317	1
3	GA5025899	MASTER CYLINDER, CATAI, 000.315	1
4	GA5004917	NUT M8 NYLOC ZP	4
5	GA5003643	WASHER 8mm FLAT SS HD	4
6	GA5070890-04	WASHER, COPPER	1
GA5070890 GOLDACRES		BRAKE BOOSTER CATAI 2013 CROP CRUISER	REV 00.E

ORIENTATION C

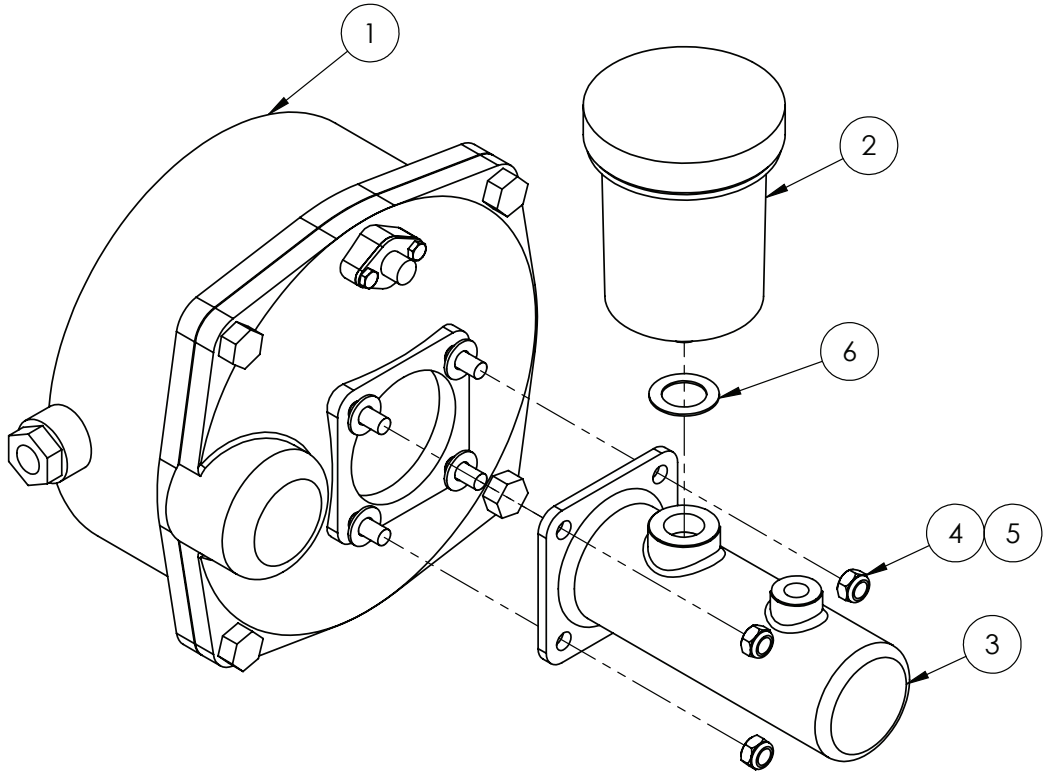

IF DESCRIPTION PREFIX IS ASSEMBLY DRAWING ONLY OR PRODUCTION DRAWING ONLY THE ITEM IS NOT FOR SALE			
ITEM	PART NUMBER	DESCRIPTION	QTY
1	GA5025898	BOOSTER, BRAKE, CATAI, 000.301	1
2	GA5071745	RESERVOIR ASSEMBLY, BRAKE BOOSTER, CATAI	1
3	GA5025899	BRAKE BOOSTER CYLINDERMASTER CYLINDER, CATAI, 000.315	1
4	GA5004917	NUT M8 NYLOC ZP	4
5	GA5003643	WASHER 8mm FLAT SS HD	4
6	GA5070890-04	WASHER, COPPER	1
GA5070890 GOLDACRES		BRAKE BOOSTER CATAI 2013 CROP CRUISER	REV 00.E

Brake Caliper, Stilfreni

REPLACEMENT PARTS			
ITEM	PART NUMBER	DESCRIPTION	QTY
A	GA5006305	PAD KIT, BRAKES, SUIT JCB & STILFRENI CALIPER, 2 PADS = 1 SET	-
B	GA5051440	SEAL KIT, SUIT STILFRENI BRAKE CALIPER, 1 SET	-
C	GA5051435	PISTON KIT, STILFRENI DUAL PISTON BRAKE CALIPER, 2 PISTONS, NO SEALS	-

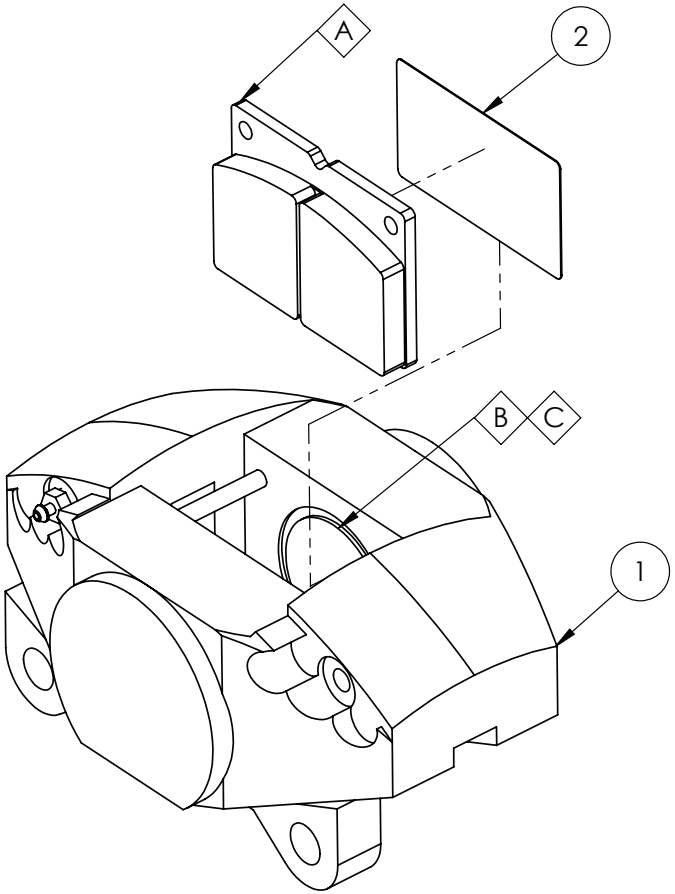

IF DESCRIPTION PREFIX IS ASSEMBLY DRAWING ONLY OR PRODUCTION DRAWING ONLY THE ITEM IS NOT FOR SALE			
ITEM	PART NUMBER	DESCRIPTION	QTY
1	GA5016069	BRAKE CALIPER, 2 X 75mm, SUIT BRAKE FLUID, STILFRENI, INCLUDES BRAKE PADS.	1
2	GA5055645	BRAKE PAD BACKING, ANTI SQUEAL, SELF ADHESIVE, PACK OF 4, SUIT SELF PROPELLED	2
GA5016069 GOLDACRES		BRAKE CALIPER, 2 X 75mm, SUIT BRAKE FLUID, STILFRENI	REV

FITTED:
- TO FRONT AXLES ONLY

Brake Caliper, JCB

REPLACEMENT PARTS			
ITEM	PART NUMBER	DESCRIPTION	QTY
A	GA5055880	BRAKE PAD KIT, 2 PADS ONLY, REAR, ADJUSTABLE AXLE, SUITS DROMOS AND JCB BRAKE CALIPER G3 G4	-
B	GA2700036	SEAL KIT, JCB BRAKE CALIPER, G3 G4, REPAIRS TWO CALIPERS	-

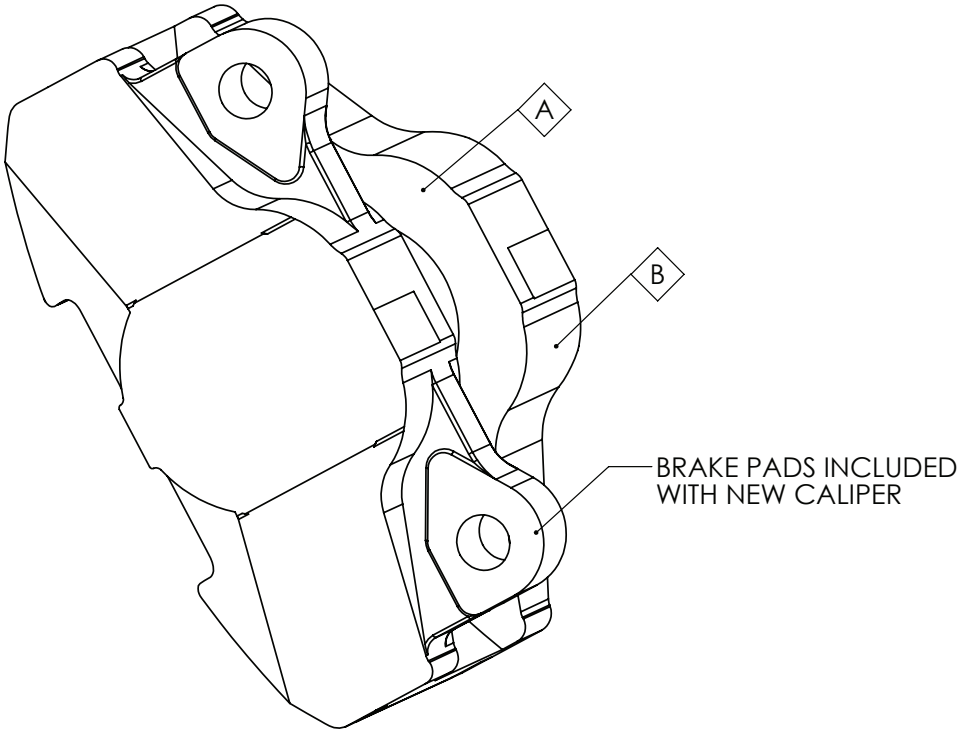

FITTED TO:
- REAR 2MT & 3MT FIXED AXLE &
- REAR 3-4MT ADJUSTABLE

GA2700034 GOLDACRES	BRAKE CALIPER, REAR DIFF, G3 G4, JCB	REV

Brake Caliper, Dromos

REPLACEMENT PARTS			
ITEM	PART NUMBER	DESCRIPTION	QTY
A	GA5055880	BRAKE PAD KIT, 2 PADS ONLY, REAR, ADJUSTABLE AXLE, SUITS DROMOS AND JCB BRAKE CALIPER G3 G4	-
B	GA5025855	SEAL KIT, SUIT, DROMOS, BRAKE CALIPER, GA5055895 (SERVES 1 CALIPER)	-

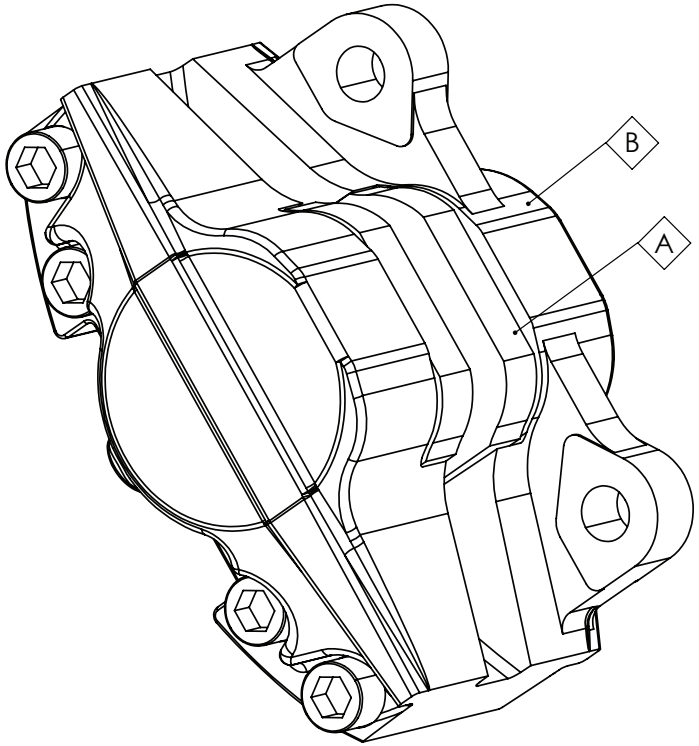

FITTED TO:
- DROMOS DIFFERENTIAL ONLY

GA5055895 GOLDACRES	BRAKE CALIPER, REAR, ADJUSTABLE AXLE, G3 G4, DROMOS, 707.920.0120.0	REV 1

19 - Bilberry

Mounting Frame, Front Camera, Bilberry

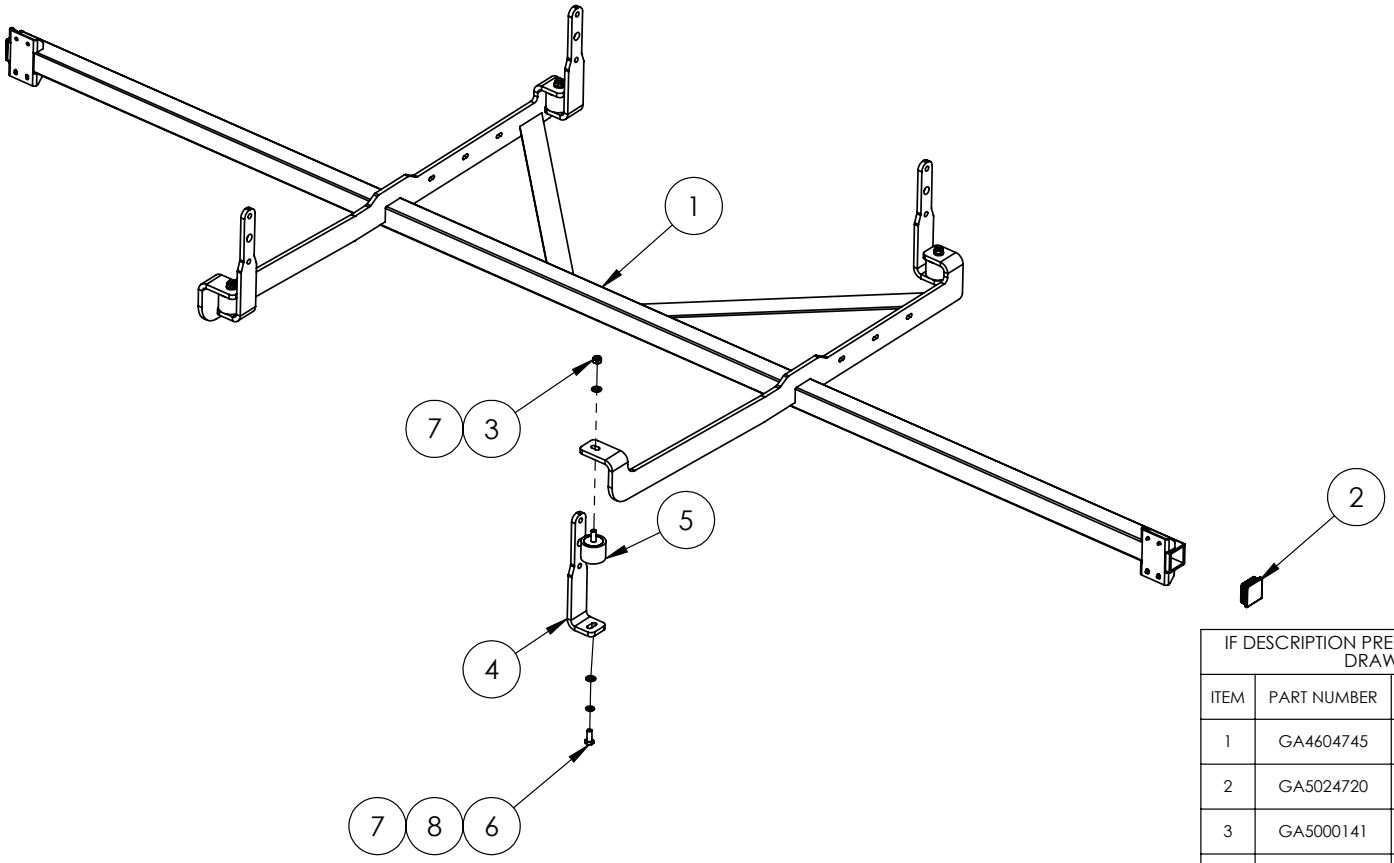

IF DESCRIPTION PREFIX IS ASSEMBLY DRAWING ONLY OR PRODUCTION DRAWING ONLY THE ITEM IS NOT FOR SALE			
ITEM	PART NUMBER	DESCRIPTION	QTY
1	GA4604745	CAMERA MOUNT, FRONT BAR, BILBERRY, G4 S2	1
2	GA5024720	END CAP, PLASTIC, BLACK, INSERT, RHS. 50 X 50, 2.4 - 4.0mm WALL	2
3	GA5000141	NUT M10 NYLOC ZP	4
4	GA4415455	PLATE, MOUNT, BILBERRY, FRONT CAMERA MOUNT, G4 S2	4
5	GA5014609	RUBBER BUFFER, 50mm DIA X 40mm LONG, M10 X 25 MALE X M10 FEMALE	4
6	GA5050180	SET SCREW M10 X 25 GR8.8 ZP	4
7	GA5000117	WASHER 10mm FLAT SS HD	8
8	GA5000137	WASHER 10mm SPRING SS	4
GA4953180 GOLDACRES		PRODUCTION DRAWING ONLY, MOUNTING FRAME, FRONT CAMERA, BILBERRY, G4 S2	REV 00

Front Camera Mounting, Bilberry

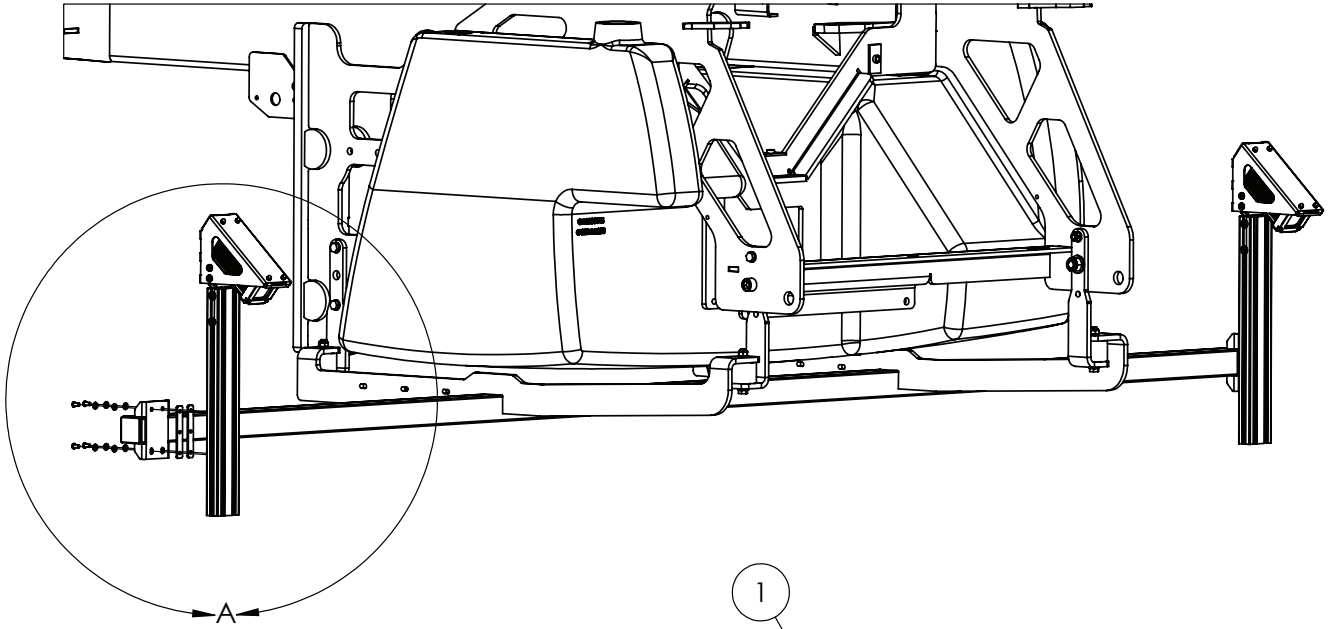

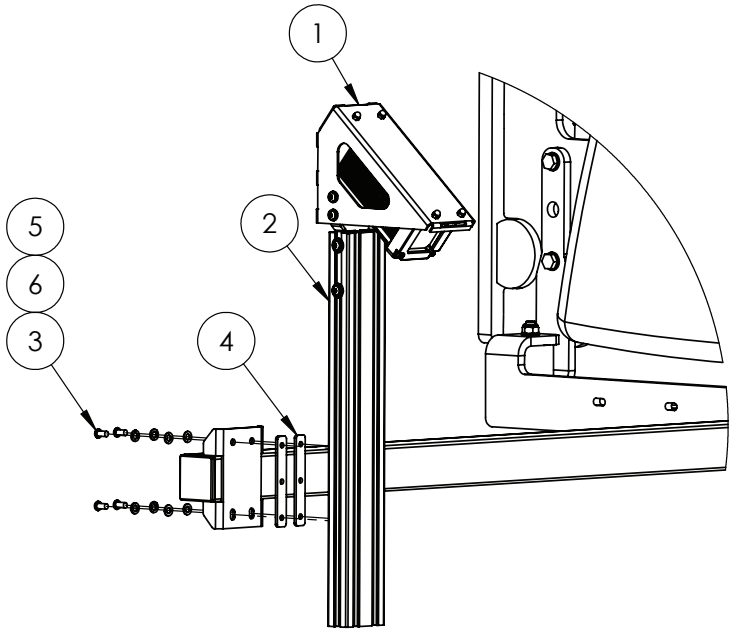

DETAIL A

IF DESCRIPTION PREFIX IS ASSEMBLY DRAWING ONLY OR PRODUCTION DRAWING ONLY THE ITEM IS NOT FOR SALE			
ITEM	PART NUMBER	DESCRIPTION	QTY
1	GA4912710	ASSEMBLY DRAWING ONLY, BILBERRY CAMERA MOUNT ASSEMBLY	2
2	GA5073810	ALUMINIUM T SLOT EXTRUSION, 30 X 60 X 2mm, RADIUS EDGE, 6063 T5, SS3-84937	2
3	GA5004033	BHCS M6 X 12 SS A2-70	8
4	GA4525112	T SLOT THREADED INSERT, 3 HOLE, M6, STRAIGHT	4
5	GA5004437	WASHER 6mm FLAT SS	8
6	GA5004447	WASHER 6mm SPRING SS	8
GA7800386 GOLDACRES	FRONT CAMERA MOUNT TO CHASSIS, BILBERRY, G4 S2		REV 00.A

Billberry Module, Ethernet Switch & PLC Mounting

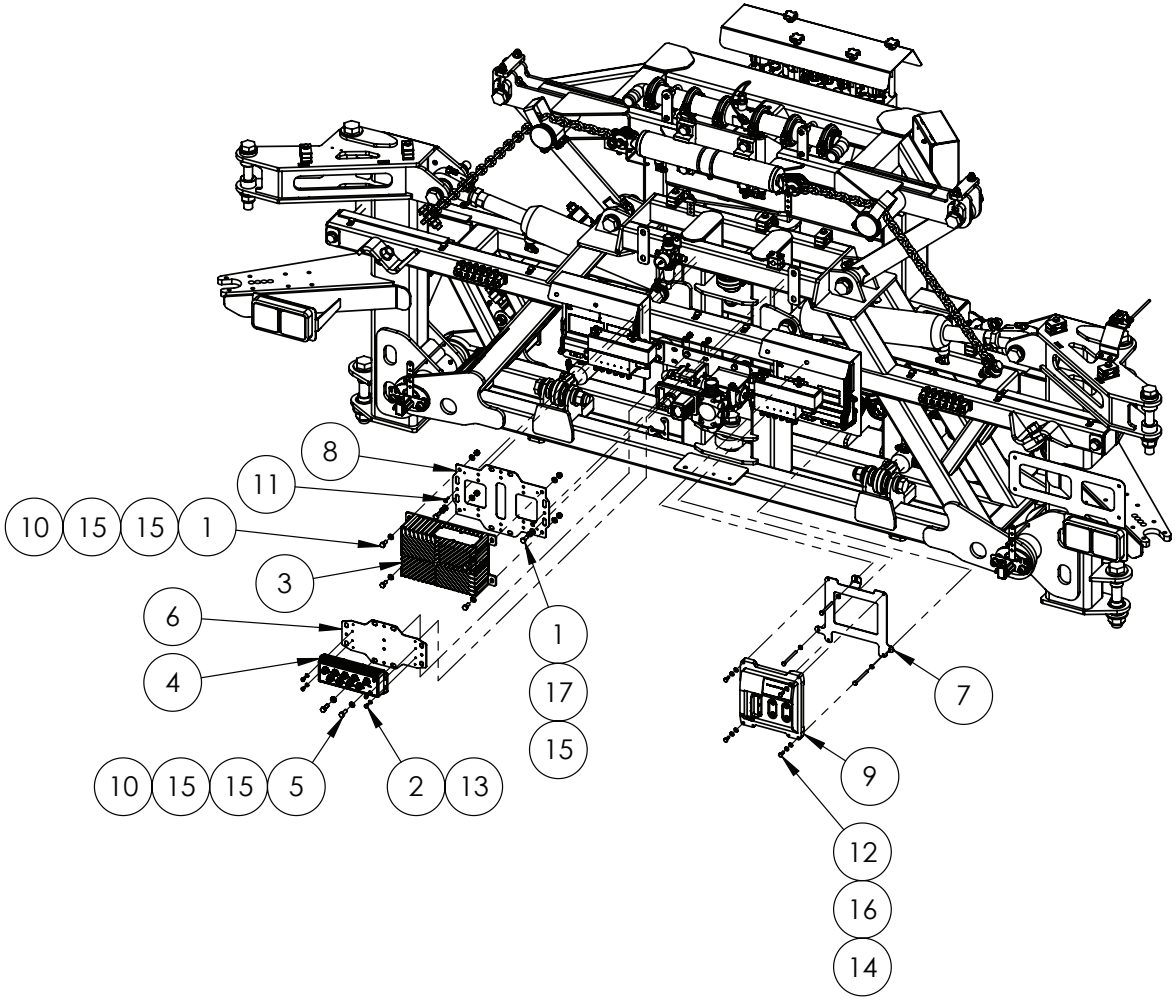

ALL ITEMS ON THIS PAGE ARE ONLY FITTED
IF WEEDETECT BILBERRY (65242, 65241) OPTIONED.

IF DESCRIPTION PREFIX IS ASSEMBLY DRAWING ONLY OR PRODUCTION DRAWING ONLY THE ITEM IS NOT FOR SALE			
ITEM	PART NUMBER	DESCRIPTION	QTY
1	GA5004085	BOLT M8 X 20 GR8.8 ZP	6
2	GA0500099	BOLT PAN HEAD M5	4
3	GA3001061	CALC MODULE, RUGGED COMPUTER, AI EDGE, SYSLOGIC XAVIER, POE RML, IP67, NUMBER 1, BILBERRY, COM-AG-SYS-XAV2	1
4	GA3000983	ETHERNET SWITCH, BILBERRY, IP65, 8 PORT, 10/100/1000BASE, M12 X-CODED KYLAND AQUAM, SWI-AG-POE-GN3	1
5	GA5004711	M8X25 SET SCREW	2
6	GA4525060	MOUNT PLATE, CALCULATION MODULE GEN 2, SWITCH GEN 3 BILBERRY CAMERA SYSTEM	1
7	GA4525245	MOUNTING PLATE, NOZZLE CONTROLLER PLC MOUNT SUIT RCM	1
8	GA4525065	MOUNTING PLATE, SWITCH MODULE GEN 2, CALC MODULE GEN 4, BILBERRY	1
9	GA3000785	NOZZLE CONTROLLER, PLC CR711S, IFM, RCM TO BILBERRY LINK	1
10	GA5052590	NUT M8 NYLOC SS	6
11	GA0500055	SCREW, SELF DRILLING, SELF TAPPING, 8G X 20mm, LARGE WAFER HEAD, PHILIPS, ZP	2
12	GA5011395	SET SCREW M6 X 16 SS A2-70	4
13	GA5003983	WASHER 5mm FLAT SS	4
14	GA5004437	WASHER 6mm FLAT SS	4
15	GA5003651	WASHER 8mm FLAT SS	14
16	GA5004447	WASHER M6 SPRING SS	4
17	GA5004919	WASHER M8 SPRING SS	2
GA6101310-11 GOLDACRES		CENTRE AND PARALIFT REAR ASSEMBLY, G4, MY24	REV 02.A

Bilberry CALC Module Mounting, LH Boom Wing

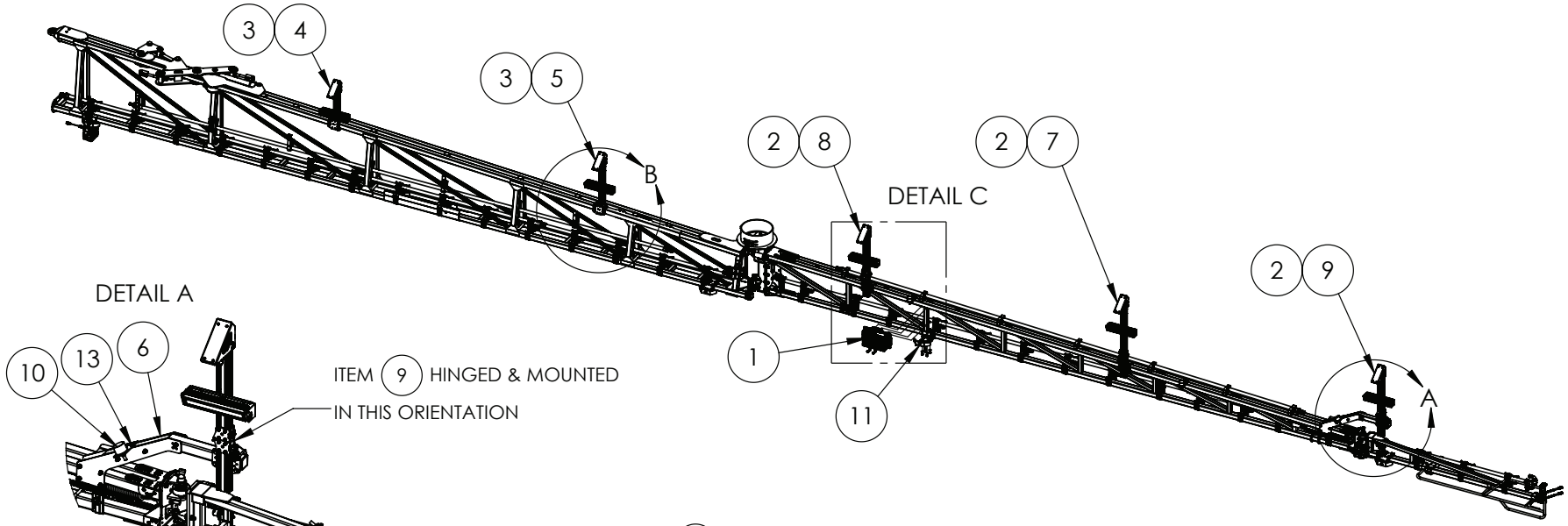

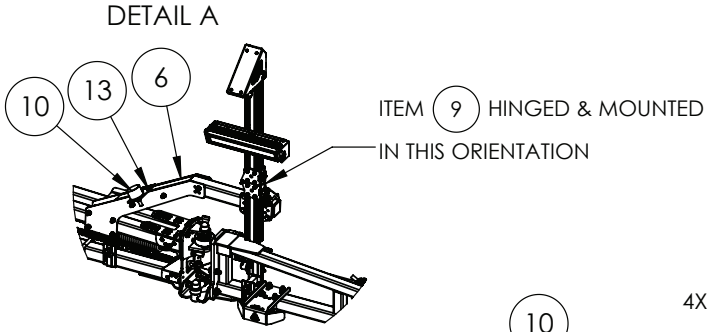

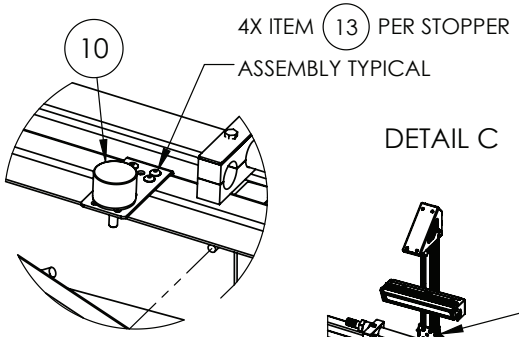

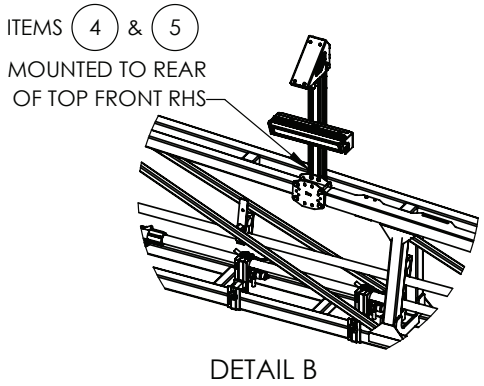

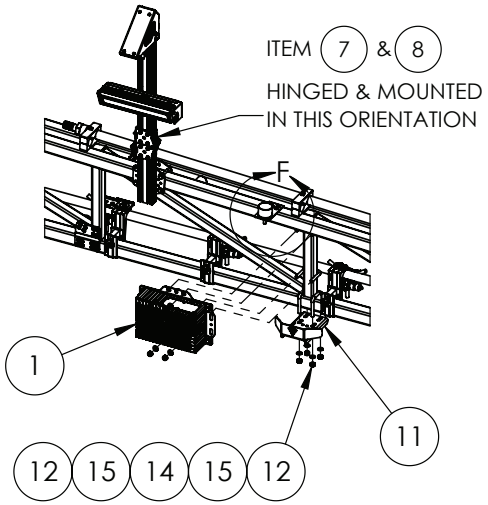

IF DESCRIPTION PREFIX IS ASSEMBLY DRAWING ONLY OR PRODUCTION DRAWING ONLY THE ITEM IS NOT FOR SALE			
ITEM	PART NUMBER	DESCRIPTION	QTY
1	GA4912820	ASSEMBLY DRAWING ONLY, BILBERRY CALC MODULE MOUNT GEN 3	1
2	GA4909580	ASSEMBLY DRAWING ONLY, BILBERRY CAM POST BOOM MOUNT, LH TRITECH, FRONT	3
3	GA4909574	ASSEMBLY DRAWING ONLY, BILBERRY CAM POST BOOM MOUNT, LH TRITECH, REAR	2
4	GA6101955	ASSEMBLY DRAWING ONLY, BILBERRY CAMERA POST CAM03/CAM04	1
5	GA6101956	ASSEMBLY DRAWING ONLY, BILBERRY CAMERA POST CAM05/CAM06	1
6	GA4909469	ASSEMBLY DRAWING ONLY, BILBERRY OUTER CAMERA MOUNT ARM SUIT 50mm SHS	1
7	GA6101958	ASSEMBLY DRAWING ONLY, BILBERRY CAMERA POST FOLDING CAM09 LH ASSEMBLY FITTED	1
8	GA6101957	ASSEMBLY DRAWING ONLY, BILBERRY CAMERA POST FOLDING LH CAM07 ASSEMBLY FITTED	1
9	GA6101959	ASSEMBLY DRAWING ONLY, BILBERRY CAMERA POST FOLDING LH CAM11 ASSEMBLY FITTED	1
10	GA4909468	ASSEMBLY DRAWING ONLY, CAM POST REST STOPPER	3
11	GA4411280	BRACKET, RAVEN XRT RADAR SENSOR / LIGHT MOUNT, BOOM, WITH FRONT SHIELD	1
12	GA5051445	NUT M10 NYLOC SS	4
13	GA0500080	RIVET, 1/4" DIA, 4.7 - 11.1mm GRIP RANGE, STEEL, HUCKLOK	12
14	GA5053645	U BOLT SQUARE TOP M10 X 52 X 75	2
15	GA5000117	WASHER 10mm FLAT SS HD	4
GA6101963-07 GOLDACRES		ASSEMBLY DRAWING ONLY. BOOM WING ASSEMBLY, 36M LH, TRITECH, S2 G4, MY24	REV 01

Bilberry CALC Module Mounting, RH Boom Wing

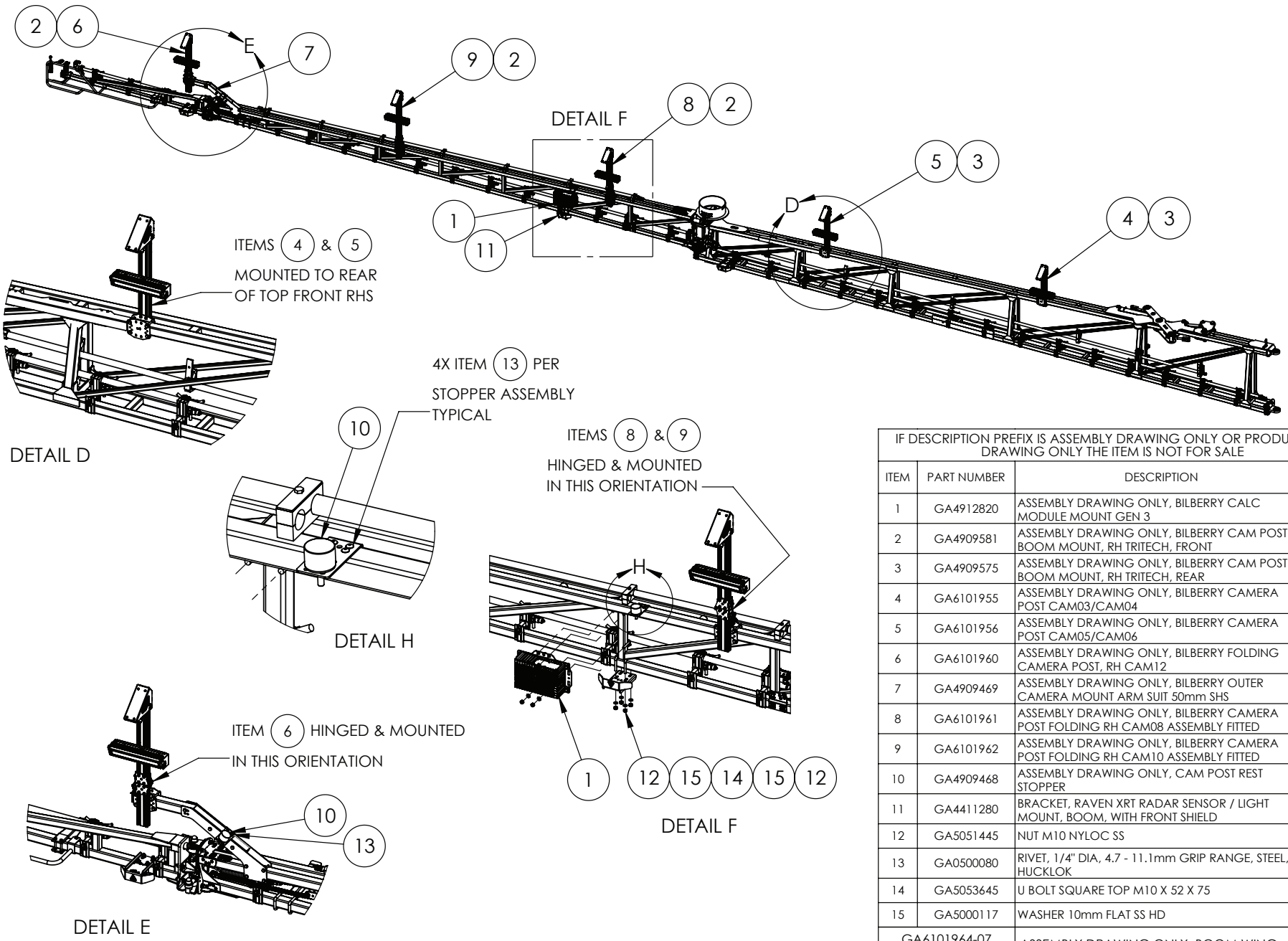

IF DESCRIPTION PREFIX IS ASSEMBLY DRAWING ONLY OR PRODUCTION DRAWING ONLY THE ITEM IS NOT FOR SALE			
ITEM	PART NUMBER	DESCRIPTION	QTY
1	GA4912820	ASSEMBLY DRAWING ONLY, BILBERRY CALC MODULE MOUNT GEN 3	1
2	GA4909581	ASSEMBLY DRAWING ONLY, BILBERRY CAM POST BOOM MOUNT, RH TRITECH, FRONT	3
3	GA4909575	ASSEMBLY DRAWING ONLY, BILBERRY CAM POST BOOM MOUNT, RH TRITECH, REAR	2
4	GA6101955	ASSEMBLY DRAWING ONLY, BILBERRY CAMERA POST CAM03/CAM04	1
5	GA6101956	ASSEMBLY DRAWING ONLY, BILBERRY CAMERA POST CAM05/CAM06	1
6	GA6101960	ASSEMBLY DRAWING ONLY, BILBERRY FOLDING CAMERA POST, RH CAM12	1
7	GA4909469	ASSEMBLY DRAWING ONLY, BILBERRY OUTER CAMERA MOUNT ARM SUIT 50mm SHS	1
8	GA6101961	ASSEMBLY DRAWING ONLY, BILBERRY CAMERA POST FOLDING RH CAM08 ASSEMBLY FITTED	1
9	GA6101962	ASSEMBLY DRAWING ONLY, BILBERRY CAMERA POST FOLDING RH CAM10 ASSEMBLY FITTED	1
10	GA4909468	ASSEMBLY DRAWING ONLY, CAM POST REST STOPPER	3
11	GA4411280	BRACKET, RAVEN XRT RADAR SENSOR / LIGHT MOUNT, BOOM, WITH FRONT SHIELD	1
12	GA5051445	NUT M10 NYLOC SS	4
13	GA0500080	RIVET, 1/4" DIA, 4.7 - 11.1mm GRIP RANGE, STEEL, HUCKLOK	12
14	GA5053645	U BOLT SQUARE TOP M10 X 52 X 75	2
15	GA5000117	WASHER 10mm FLAT SS HD	4
GA6101964-07 GOLDACRES		ASSEMBLY DRAWING ONLY, BOOM WING ASSEMBLY, 36M RH, TRITECH, S2 G4, MY24	REV 01

Mounting Plate, Bilberry CALC Module

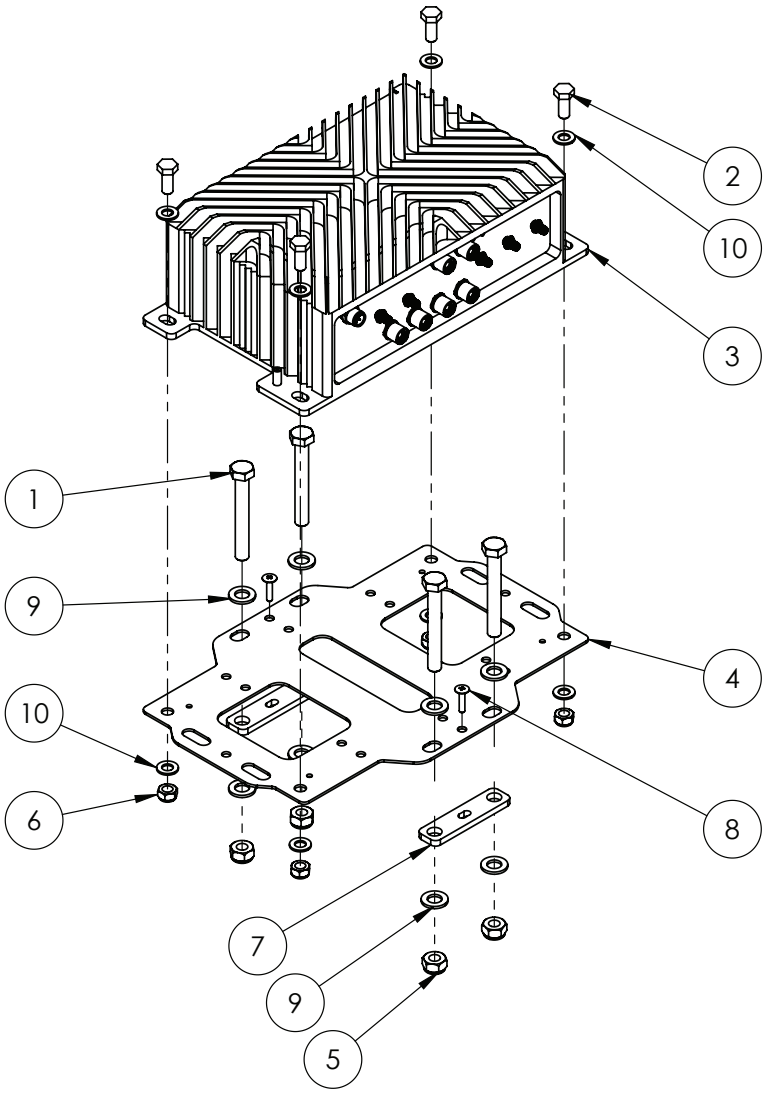

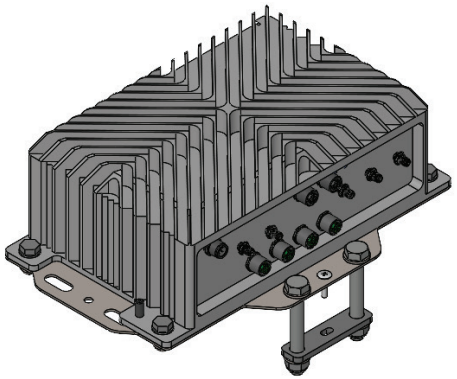

IF DESCRIPTION PREFIX IS ASSEMBLY DRAWING ONLY OR PRODUCTION DRAWING ONLY THE ITEM IS NOT FOR SALE			
ITEM	PART NUMBER	DESCRIPTION	QTY
1	GA5006073	BOLT M10 X 75 GR8.8 ZP	4
2	GA5004085	BOLT M8 X 20 GR8.8 ZP	4
3	GA3001061	CALC MODULE, RUGGED COMPUTER, AI EDGE, SYSLOGIC XAVIER, POE RML, IP67, NUMBER 1, BILBERRY, COM-AG-SYS-XAV2	1
4	GA4525065	MOUNTING PLATE, SWITCH MODULE GEN 2, CALC MODULE GEN 4, BILBERRY	1
5	GA5000141	NUT M10 NYLOC ZP	4
6	GA5052590	NUT M8 NYLOC SS	4
7	GA4000775	PLATE, MOUNTING PLATE, BILBERRY MODULE WING MOUNT	2
8	GA0500055	SCREW, SELF DRILLING, SELF TAPPING, 8G X 20mm, LARGE WAFER HEAD, PHILIPS, ZP	2
9	GA5000117	WASHER 10mm FLAT SS HD	8
10	GA5003643	WASHER 8mm FLAT SS HD	8
GA4912820 GOLDACRES		BILBERRY CALC MODULE MOUNT GEN 3 ASSEMBLY DRAWING ONLY, BILBERRY CALC MODULE MOUNT GEN 3	REV 01

Rubber Stopper, Cam Post Rest, Bilberry

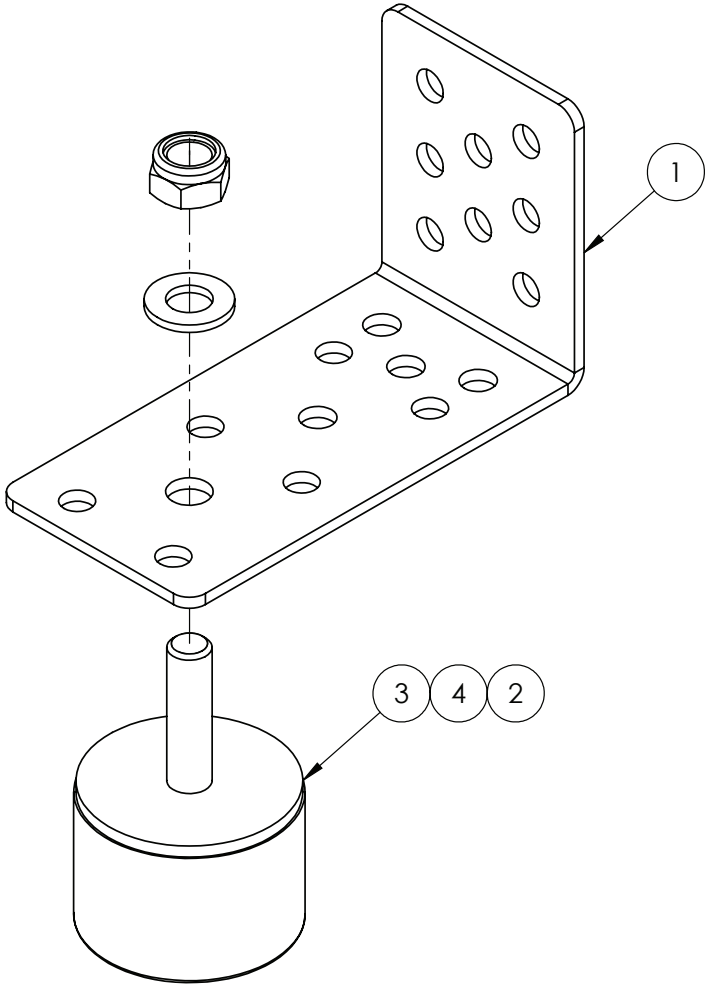

IF DESCRIPTION PREFIX IS ASSEMBLY DRAWING ONLY OR PRODUCTION DRAWING ONLY THE ITEM IS NOT FOR SALE			
ITEM	PART NUMBER	DESCRIPTION	QTY
1	GA4525125	BRACKET, BILBERRY POST SUPPORT	1
2	GA5051445	NUT M10 NYLOC SS	1
3	GA5052815	RUBBER STOPPER, DIAMETER 50 X 35 LONG, WITH M10 X 35 STUD	1
4	GA5000117	WASHER M10 FLAT SS HD	1
GA4909468 GOLDACRES		ASSEMBLY DRAWING ONLY, CAM POST REST STOPPER	REV 00.B

Outer Camera Mount, Bilberry

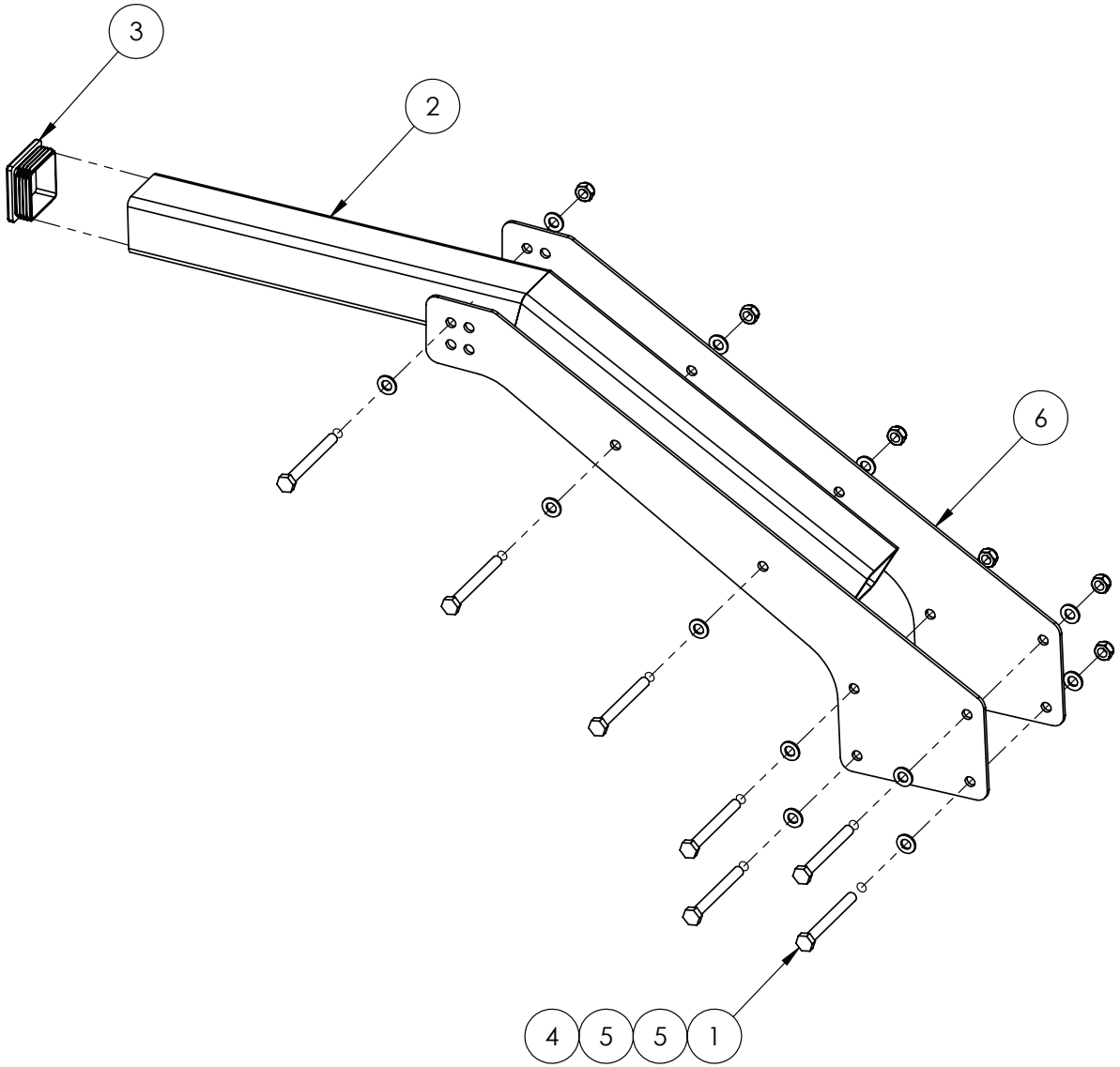

IF DESCRIPTION PREFIX IS ASSEMBLY DRAWING ONLY OR PRODUCTION DRAWING ONLY THE ITEM IS NOT FOR SALE			
ITEM	PART NUMBER	DESCRIPTION	QTY
1	GA5052600	BOLT M8 X 75 SS A2-70	7
2	GA4603498	CAMERA MOUNT, OUTER SUPPORT BILBERRY SUIT 50mm	1
3	GA5024720	END CAP, PLASTIC, BLACK, INSERT, RHS. 50 X 50, 2.4 - 4.0mm WALL	1
4	GA5052590	NUT M8 NYLOC SS	7
5	GA5003643	WASHER 8mm FLAT SS HD	14
6	GA4526595	MOUNTING PLATE, OUTER ARM LOWER SUPPORT, BILBERRY CAMERA	2
GA4909469 GOLDACRES		ASSEMBLY DRAWING ONLY, BILBERRY OUTER CAMERA MOUNT ARM SUIT 50mm SHS	REV 00

Camera Post Assembly, CAM 1 - 4, Bilberry

BUILD OPTION:
65276 - SPECIALISED LIGHTS FOR NIGHT TIME SPOT SPRAYING

NOTE:
SERIES 3 MACHINES - LIGHTS ARE STANDARD

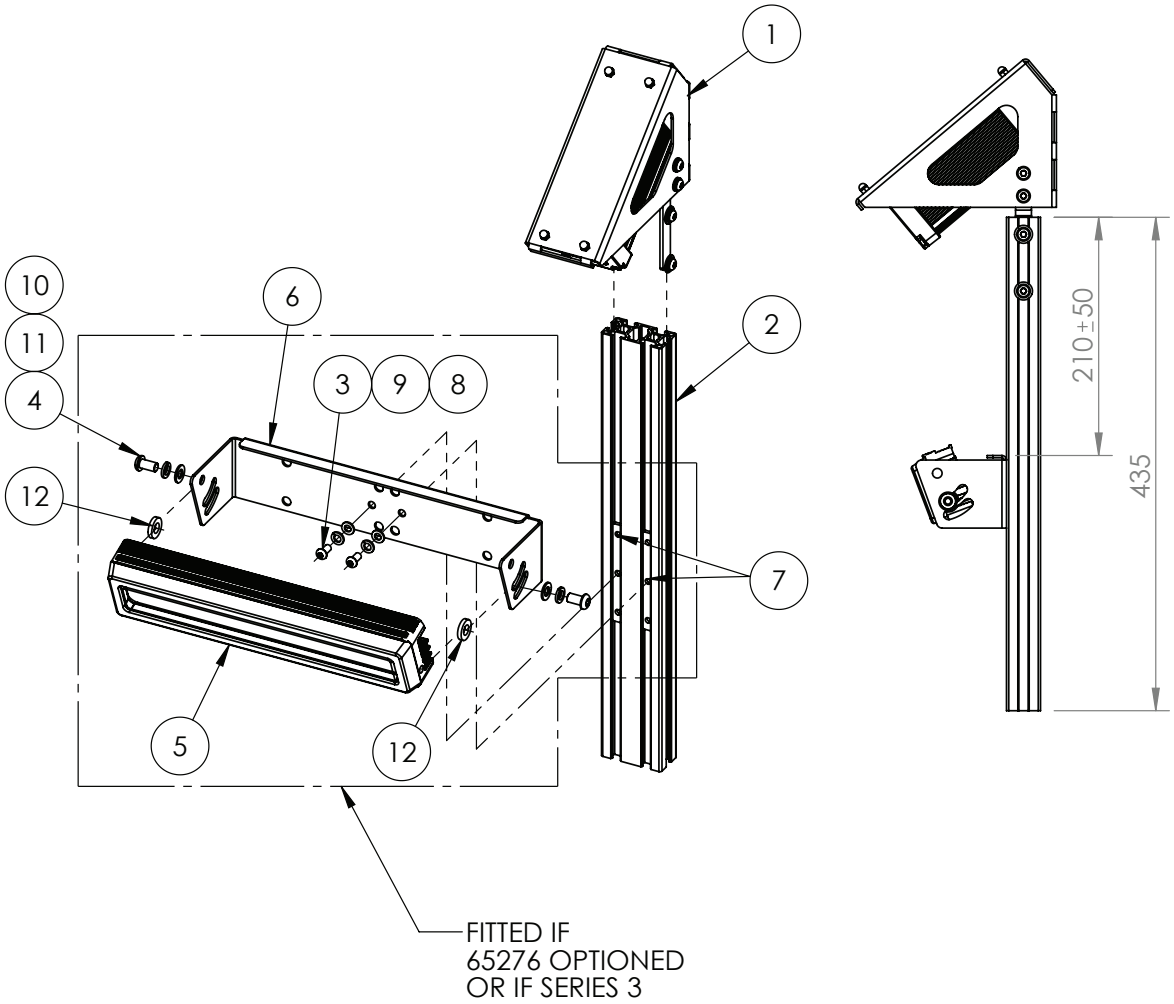

IF DESCRIPTION PREFIX IS ASSEMBLY DRAWING ONLY OR PRODUCTION DRAWING ONLY THE ITEM IS NOT FOR SALE			
ITEM	PART NUMBER	DESCRIPTION	QTY
1	GA4912710	ASSEMBLY DRAWING ONLY, BILBERRY CAMERA MOUNT ASSEMBLY	1
2	GA5073810	ALUMINIUM T SLOT EXTRUSION, 30 X 60 X 2mm, RADIUS EDGE, 6063 T5, SS3-84937	1
3	GA5004033	BHCS M6 X 12 SS A2-70	2
4	GA5004696	BHCS M8 X 16 SS A2-70	2
5	GA3000716	LED LIGHT MODULE, 3M SECTION, WEED DETECTION, GEN 3, BILBERRY	1
6	GA4526600	MOUNTING BRACKET SUIT BILBERRY SPOTLIGHT FRONT MOUNT	1
7	GA4525112	T SLOT THREADED INSERT, 3 HOLE, M6, STRAIGHT	2
8	GA5004437	WASHER 6mm FLAT SS	2
9	GA5004447	WASHER 6mm SPRING SS	2
10	GA5003643	WASHER 8mm FLAT SS HD	2
11	GA5004919	WASHER 8mm SPRING SS	2
12	GA5055245	WASHER, NOZZLE CAP SEAL, RUBBER, 19 OD X 9 ID, SUIT TEE JET NOZZLE, REPLACES CP19438-EPR	2
GA6101955 GOLDACRES		ASSEMBLY DRAWING ONLY, BILBERRY CAMERA POST CAM03/CAM04	REV 02

Camera Post Assembly, CAM 5 & 6, Bilberry

BUILD OPTION:
65276 - SPECIALISED LIGHTS FOR NIGHT TIME SPOT SPRAYING

NOTE:
SERIES 3 MACHINES - LIGHTS ARE STANDARD

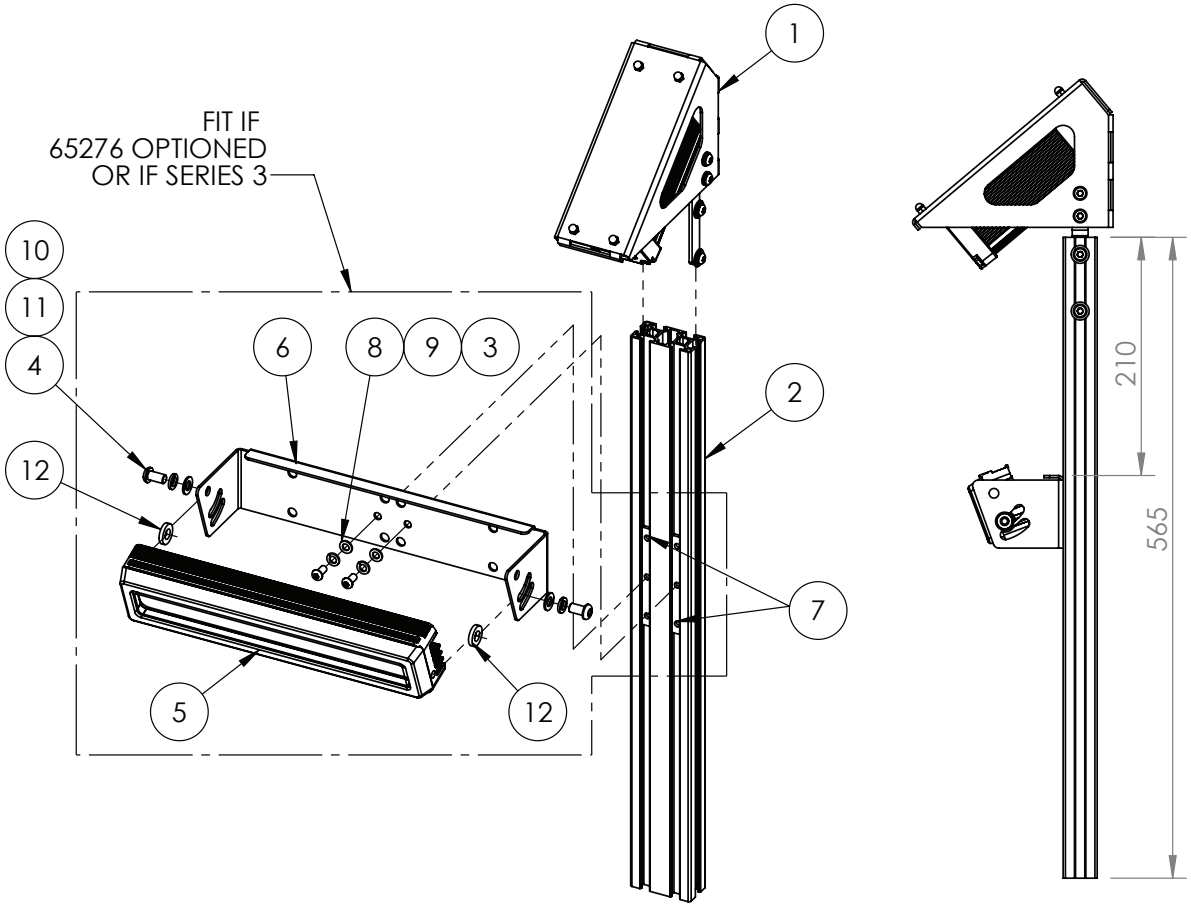

IF DESCRIPTION PREFIX IS ASSEMBLY DRAWING ONLY OR PRODUCTION DRAWING ONLY THE ITEM IS NOT FOR SALE			
ITEM	PART NUMBER	DESCRIPTION	QTY
1	GA4912710	ASSEMBLY DRAWING ONLY, BILBERRY CAMERA MOUNT ASSEMBLY	1
2	GA4703101	ALUMINIUM T SLOT EXTRUSION, 30 X 60 X 2mm, RADIUS EDGE, 6063 T5, SS3-84937	1
3	GA5004033	BHCS M6 X 12 SS A2-70	2
4	GA5004696	BHCS M8 X 16 SS A2-70	2
5	GA3000716	LED LIGHT MODULE, 3M SECTION, WEED DETECTION, GEN 3, BILBERRY	1
6	GA4526600	MOUNTING BRACKET SUIT BILBERRY SPOTLIGHT FRONT MOUNT	1
7	GA4525112	T SLOT THREADED INSERT, 3 HOLE, M6, STRAIGHT	2
8	GA5004437	WASHER 6mm FLAT SS	2
9	GA5004447	WASHER 6mm SPRING SS	2
10	GA5003643	WASHER 8mm FLAT SS HD	2
11	GA5004919	WASHER 8mm SPRING SS	2
12	GA5055245	WASHER, NOZZLE CAP SEAL, RUBBER, 19 OD X 9 ID, SUIT TEE JET NOZZLE, REPLACES CP19438-EPR	2
GA6101956 GOLDACRES		ASSEMBLY DRAWING ONLY, BILBERRY CAMERA POST CAM05/CAM06	REV 01

Camera Post Assembly, LH, CAM 7, Bilberry

BUILD OPTION:
65276 - SPECIALISED LIGHTS FOR NIGHT TIME SPOT SPRAYING

NOTE:
SERIES 3 MACHINES - LIGHTS ARE STANDARD

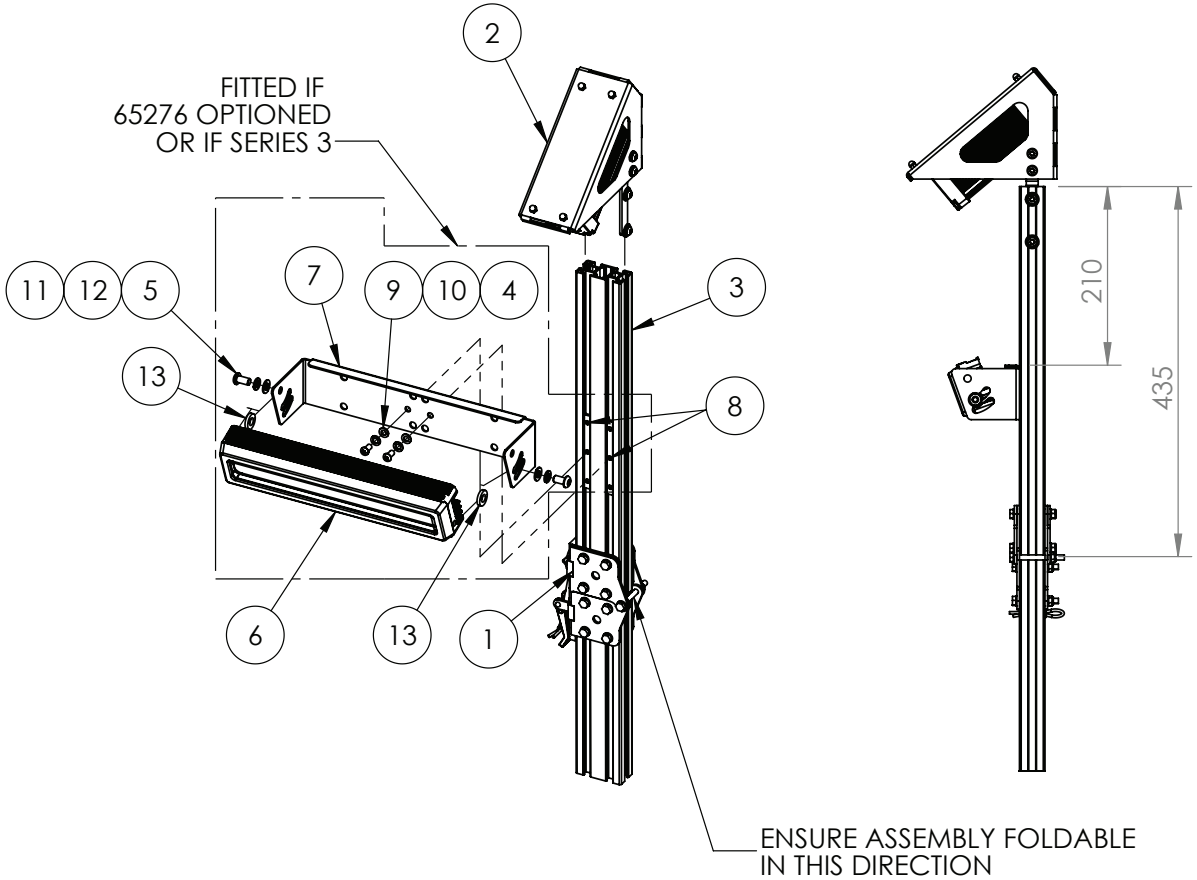

IF DESCRIPTION PREFIX IS ASSEMBLY DRAWING ONLY OR PRODUCTION DRAWING ONLY THE ITEM IS NOT FOR SALE			
ITEM	PART NUMBER	DESCRIPTION	QTY
1	GA4909588	ASSEMBLY DRAWING ONLY, BILBERRY CAM POST LOWER FOLDING ASSEMBLY, 250mm	1
2	GA4912710	ASSEMBLY DRAWING ONLY, BILBERRY CAMERA MOUNT ASSEMBLY	1
3	GA5073810	ALUMINIUM T SLOT EXTRUSION, 30 X 60 X 2mm, RADIUS EDGE, 6063 T5, SS3-84937	1
4	GA5004033	BHCS M6 X 12 SS A2-70	2
5	GA5004696	BHCS M8 X 16 SS A2-70	2
6	GA3000716	LED LIGHT MODULE, 3M SECTION, WEED DETECTION, GEN 3, BILBERRY	1
7	GA4526600	MOUNTING BRACKET SUIT BILBERRY SPOTLIGHT FRONT MOUNT	1
8	GA4525112	T SLOT THREADED INSERT, 3 HOLE, M6, STRAIGHT	2
9	GA5004437	WASHER 6mm FLAT SS	2
10	GA5004447	WASHER 6mm SPRING SS	2
11	GA5003651	WASHER 8mm FLAT SS	2
12	GA5004919	WASHER 8mm SPRING SS	2
13	GA5055245	WASHER, NOZZLE CAP SEAL, RUBBER, 19 OD X 9 ID, SUIT TEE JET NOZZLE, REPLACES CP19438-EPR	2
GA6101957 GOLDACRES		ASSEMBLY DRAWING ONLY, BILBERRY CAMERA POST FOLDING LH CAM07 ASSEMBLY FITTED	REV 02

Camera Post Assembly, RH, CAM 8, Bilberry

BUILD OPTION:
65276 - SPECIALISED LIGHTS FOR NIGHT TIME SPOT SPRAYING

NOTE:
SERIES 3 MACHINES - LIGHTS ARE STANDARD

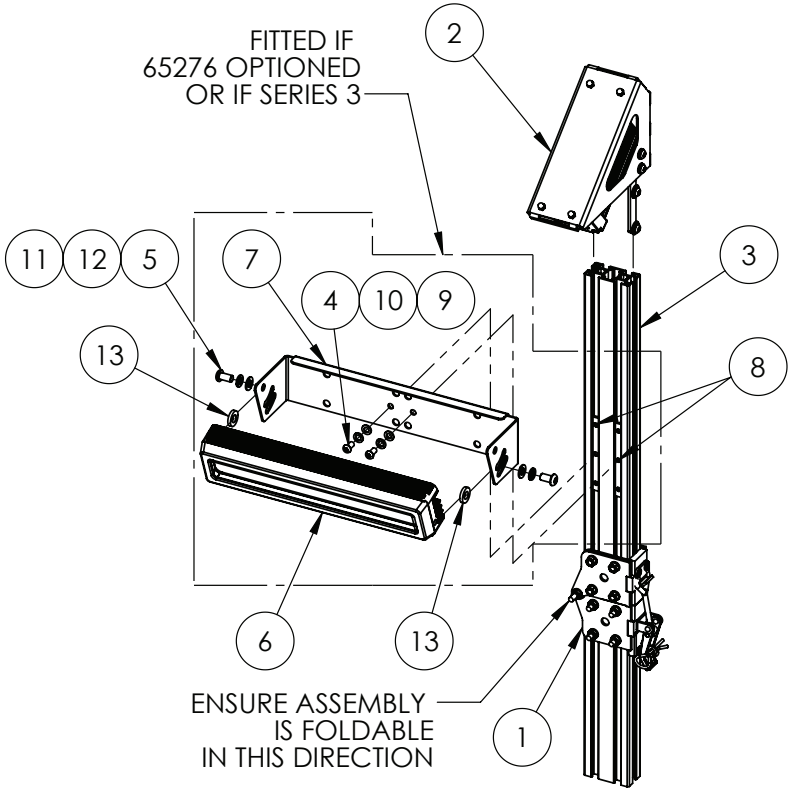

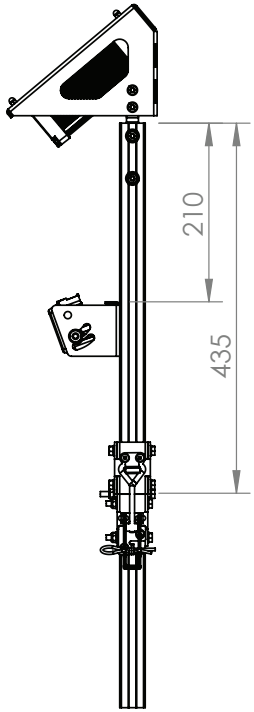

IF DESCRIPTION PREFIX IS ASSEMBLY DRAWING ONLY OR PRODUCTION DRAWING ONLY THE ITEM IS NOT FOR SALE			
ITEM	PART NUMBER	DESCRIPTION	QTY
1	GA4909588	ASSEMBLY DRAWING ONLY, BILBERRY CAM POST LOWER FOLDING ASSEMBLY, 250mm	1
2	GA4912710	ASSEMBLY DRAWING ONLY, BILBERRY CAMERA MOUNT ASSEMBLY	1
3	GA5073810	ALUMINIUM T SLOT EXTRUSION, 30 X 60 X 2mm, RADIUS EDGE, 6063 T5, SS3-84937	1
4	GA5004033	BHCS M6 X 12 SS A2-70	2
5	GA5004696	BHCS M8 X 16 SS A2-70	2
6	GA3000716	LED LIGHT MODULE, 3M SECTION, WEED DETECTION, GEN 3, BILBERRY	1
7	GA4526600	MOUNTING BRACKET SUIT BILBERRY SPOTLIGHT FRONT MOUNT	1
8	GA4525112	T SLOT THREADED INSERT, 3 HOLE, M6, STRAIGHT	2
9	GA5004437	WASHER 6mm FLAT SS	2
10	GA5004447	WASHER 6mm SPRING SS	2
11	GA5003643	WASHER 8mm FLAT SS HD	2
12	GA5004919	WASHER 8mm SPRING SS	2
13	GA5055245	WASHER, NOZZLE CAP SEAL, RUBBER, 19 OD X 9 ID, SUIT TEE JET NOZZLE, REPLACES CP19438-EPR	2
GA6101961 GOLDACRES		ASSEMBLY DRAWING ONLY, BILBERRY CAMERA POST FOLDING RH CAM08 ASSEMBLY FITTED	REV 01

Camera Post Assembly, LH, CAM 9, Bilberry

BUILD OPTION:
65276 - SPECIALISED LIGHTS FOR NIGHT TIME SPOT SPRAYING

NOTE:
SERIES 3 MACHINES - LIGHTS ARE STANDARD

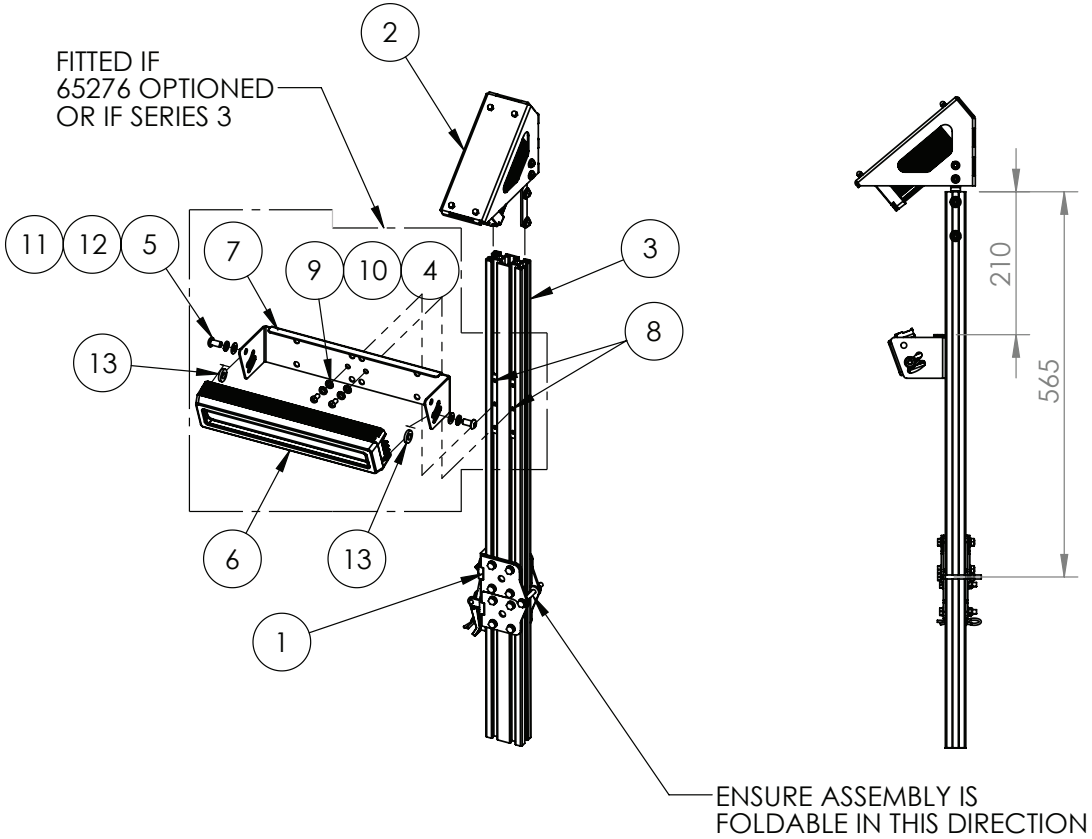

IF DESCRIPTION PREFIX IS ASSEMBLY DRAWING ONLY OR PRODUCTION DRAWING ONLY THE ITEM IS NOT FOR SALE			
ITEM	PART NUMBER	DESCRIPTION	QTY
1	GA4909588	ASSEMBLY DRAWING ONLY, BILBERRY CAM POST LOWER FOLDING ASSEMBLY, 250mm	1
2	GA4912710	ASSEMBLY DRAWING ONLY, BILBERRY CAMERA MOUNT ASSEMBLY	1
3	GA4703101	ALUMINIUM T SLOT EXTRUSION, 30 X 60 X 2mm, RADIUS EDGE, 6063 T5, SS3-84937	1
4	GA5004033	BHCS M6 X 12 SS A2-70	2
5	GA5004696	BHCS M8 X 16 SS A2-70	2
6	GA3000716	LED LIGHT MODULE, 3M SECTION, WEED DETECTION, GEN 3, BILBERRY	1
7	GA4526600	MOUNTING BRACKET SUIT BILBERRY SPOTLIGHT FRONT MOUNT	1
8	GA4525112	T SLOT THREADED INSERT, 3 HOLE, M6, STRAIGHT	2
9	GA5004437	WASHER 6mm FLAT SS	2
10	GA5004447	WASHER 6mm SPRING SS	2
11	GA5003651	WASHER 8mm FLAT SS	2
12	GA5004919	WASHER 8mm SPRING SS	2
13	GA5055245	WASHER, NOZZLE CAP SEAL, RUBBER, 19 OD X 9 ID, SUIT TEE JET NOZZLE, REPLACES CP19438-EPR	2
GA6101958 GOLDACRES		ASSEMBLY DRAWING ONLY, BILBERRY CAMERA POST FOLDING CAM09 LH ASSEMBLY FITTED	REV 01

Camera Post Assembly, RH, CAM 10, Bilberry

BUILD OPTION:
65276 - SPECIALISED LIGHTS FOR NIGHT TIME SPOT SPRAYING

NOTE:
SERIES 3 MACHINES - LIGHTS ARE STANDARD

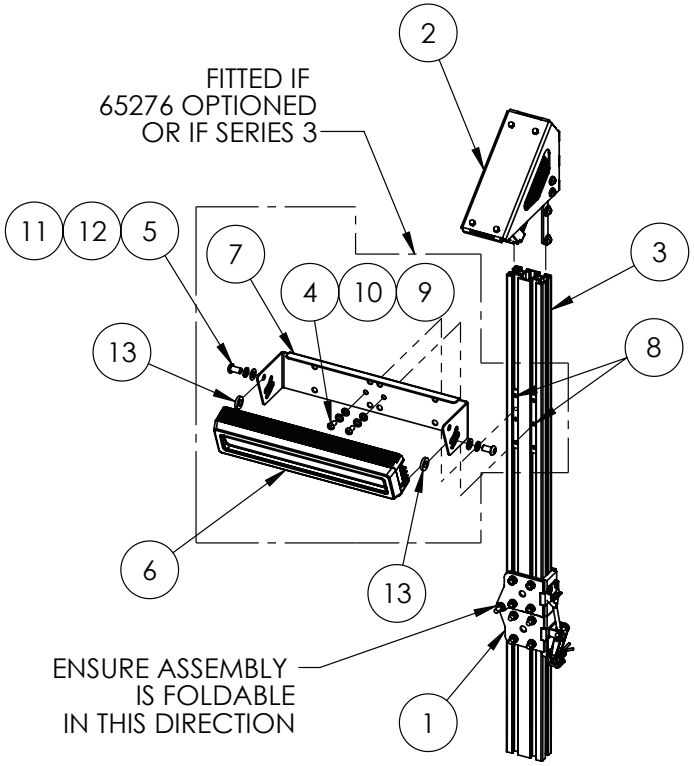

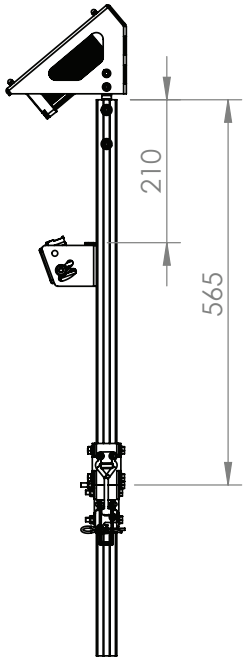

IF DESCRIPTION PREFIX IS ASSEMBLY DRAWING ONLY OR PRODUCTION DRAWING ONLY THE ITEM IS NOT FOR SALE			
ITEM	PART NUMBER	DESCRIPTION	QTY
1	GA4909588	ASSEMBLY DRAWING ONLY, BILBERRY CAM POST LOWER FOLDING ASSEMBLY, 250mm	1
2	GA4912710	ASSEMBLY DRAWING ONLY, BILBERRY CAMERA MOUNT ASSEMBLY	1
3	GA4703101	ALUMINIUM T SLOT EXTRUSION, 30 X 60 X 2mm, RADIUS EDGE, 6063 T5, SS3-84937	1
4	GA5004033	BHCS M6 X 12 SS A2-70	2
5	GA5004696	BHCS M8 X 16 SS A2-70	2
6	GA3000716	LED LIGHT MODULE, 3M SECTION, WEED DETECTION, GEN 3, BILBERRY	1
7	GA4526600	MOUNTING BRACKET SUIT BILBERRY SPOTLIGHT FRONT MOUNT	1
8	GA4525112	T SLOT THREADED INSERT, 3 HOLE, M6, STRAIGHT	2
9	GA5004437	WASHER 6mm FLAT SS	2
10	GA5004447	WASHER 6mm SPRING SS	2
11	GA5003643	WASHER 8mm FLAT SS HD	2
12	GA5004919	WASHER 8mm SPRING SS	2
13	GA5055245	WASHER, NOZZLE CAP SEAL, RUBBER, 19 OD X 9 ID, SUIT TEE JET NOZZLE, REPLACES CP19438-EPR	2
GA6101962 GOLDACRES		ASSEMBLY DRAWING ONLY, BILBERRY CAMERA POST FOLDING RH CAM10 ASSEMBLY FITTED	REV 01

Camera Post Assembly, LH, CAM 11, Bilberry

BUILD OPTION:
65276 - SPECIALISED LIGHTS FOR NIGHT TIME SPOT SPRAYING

NOTE:
SERIES 3 MACHINES - LIGHTS ARE STANDARD

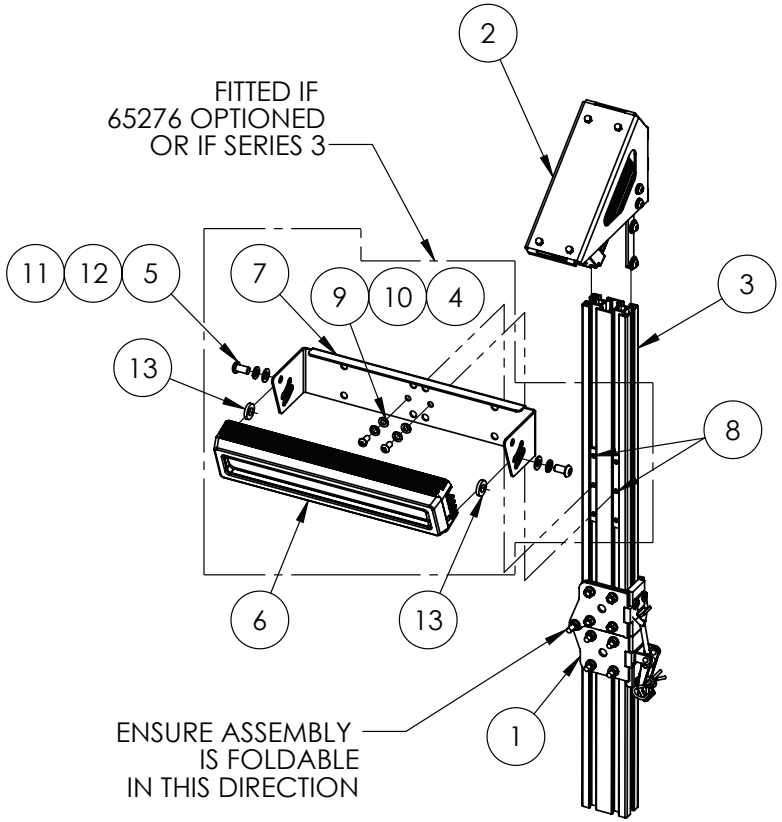

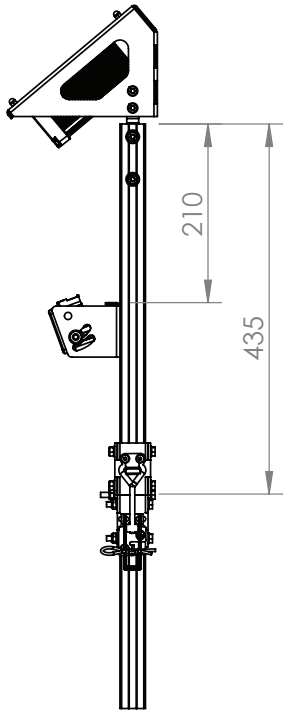

IF DESCRIPTION PREFIX IS ASSEMBLY DRAWING ONLY OR PRODUCTION DRAWING ONLY THE ITEM IS NOT FOR SALE			
ITEM	PART NUMBER	DESCRIPTION	QTY
1	GA4909588	ASSEMBLY DRAWING ONLY, BILBERRY CAM POST LOWER FOLDING ASSEMBLY, 250mm	1
2	GA4912710	ASSEMBLY DRAWING ONLY, BILBERRY CAMERA MOUNT ASSEMBLY	1
3	GA5073810	ALUMINIUM T SLOT EXTRUSION, 30 X 60 X 2mm, RADIUS EDGE, 6063 T5, SS3-84937	1
4	GA5004033	BHCS M6 X 12 SS A2-70	2
5	GA5004696	BHCS M8 X 16 SS A2-70	2
6	GA3000716	LED LIGHT MODULE, 3M SECTION, WEED DETECTION, GEN 3, BILBERRY	1
7	GA4526600	MOUNTING BRACKET SUIT BILBERRY SPOTLIGHT FRONT MOUNT	1
8	GA4525112	T SLOT THREADED INSERT, 3 HOLE, M6, STRAIGHT	2
9	GA5004437	WASHER 6mm FLAT SS	2
10	GA5004447	WASHER 6mm SPRING SS	2
11	GA5003651	WASHER 8mm FLAT SS	2
12	GA5004919	WASHER 8mm SPRING SS	2
13	GA5055245	WASHER, NOZZLE CAP SEAL, RUBBER, 19 OD X 9 ID, SUIT TEE JET NOZZLE, REPLACES CP19438-EPR	2
GA6101959 GOLDACRES		ASSEMBLY DRAWING ONLY, BILBERRY CAMERA POST FOLDING LH CAM11 ASSEMBLY FITTED	REV 01

Camera Post Assembly, RH, CAM 12, Bilberry

BUILD OPTION:
65276 - SPECIALISED LIGHTS FOR NIGHT TIME SPOT SPRAYING

NOTE:
SERIES 3 MACHINES - LIGTHS ARE STANDARD

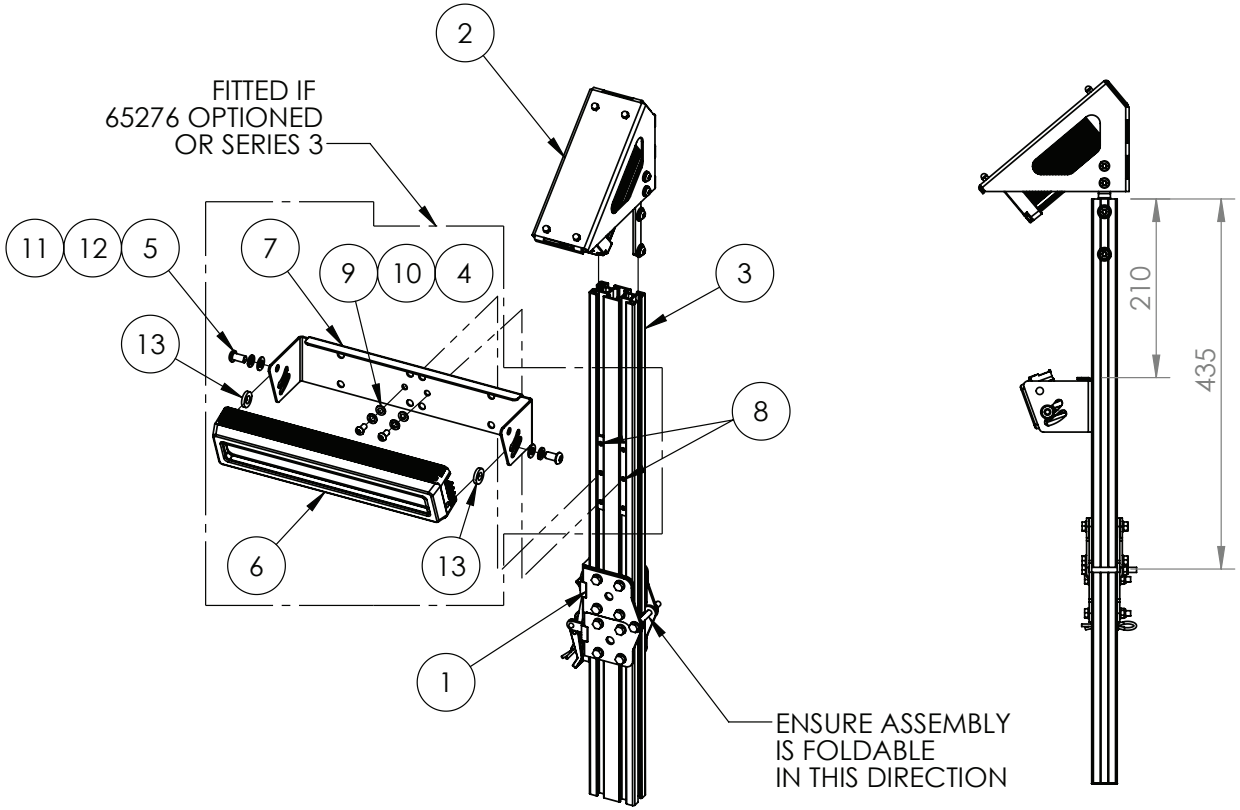

IF DESCRIPTION PREFIX IS ASSEMBLY DRAWING ONLY OR PRODUCTION DRAWING ONLY THE ITEM IS NOT FOR SALE			
ITEM	PART NUMBER	DESCRIPTION	QTY
1	GA4909588	ASSEMBLY DRAWING ONLY, BILBERRY CAM POST LOWER FOLDING ASSEMBLY, 250mm	1
2	GA4912710	ASSEMBLY DRAWING ONLY, BILBERRY CAMERA MOUNT ASSEMBLY	1
3	GA5073810	ALUMINIUM T SLOT EXTRUSION, 30 X 60 X 2mm, RADIUS EDGE, 6063 T5, SS3-84937	1
4	GA5004033	BHCS M6 X 12 SS A2-70	2
5	GA5004696	BHCS M8 X 16 SS A2-70	2
6	GA3000716	LED LIGHT MODULE, 3M SECTION, WEED DETECTION, GEN 3, BILBERRY	1
7	GA4526600	MOUNTING BRACKET SUIT BILBERRY SPOTLIGHT FRONT MOUNT	1
8	GA4525112	T SLOT THREADED INSERT, 3 HOLE, M6, STRAIGHT	2
9	GA5004437	WASHER 6mm FLAT SS	2
10	GA5004447	WASHER 6mm SPRING SS	2
11	GA5003643	WASHER 8mm FLAT SS HD	2
12	GA5004919	WASHER 8mm SPRING SS	2
13	GA5055245	WASHER, NOZZLE CAP SEAL, RUBBER, 19 OD X 9 ID, SUIT TEE JET NOZZLE, REPLACES CP19438-EPR	2
GA6101960 GOLDACRES		ASSEMBLY DRAWING ONLY, BILBERRY FOLDING CAMERA POST, RH CAM12	REV 01

Lower Post Assembly, Folding, 250mm, Bilberry

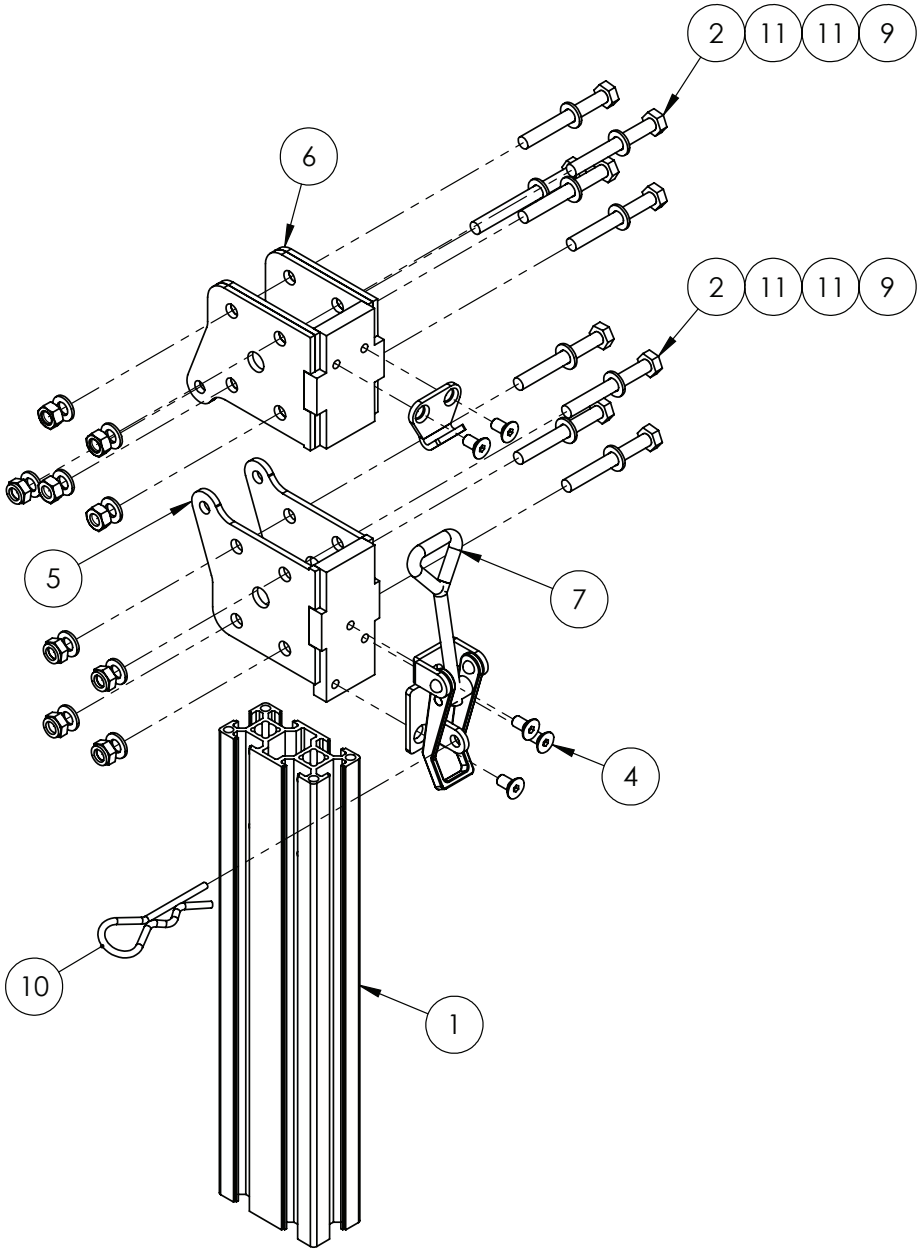

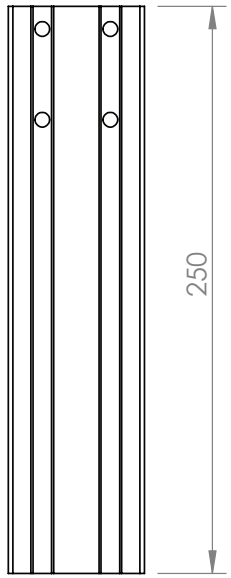

IF DESCRIPTION PREFIX IS ASSEMBLY DRAWING ONLY OR PRODUCTION DRAWING ONLY THE ITEM IS NOT FOR SALE			
ITEM	PART NUMBER	DESCRIPTION	QTY
1	GA5073810	ALUMINIUM T SLOT EXTRUSION, 30 X 60 X 2mm, RADIUS EDGE, 6063 T5, SS3-84937	1
2	GA5011419	BOLT M6 X 50 SS A2-70	8
3	GA0500085	BOLT M6 X 60 SS	1
4	GA0500101	CSCS M5 X 10 SS A2-70	5
5	GA4603502	CAMERA POST MOUNT PIVOT INNER, REMOVABLE, SUIT BILBERRY	1
6	GA4603501	CAMERA POST MOUNT PIVOT OUTER, REMOVABLE, SUIT BILBERRY	1
7	GA5007071	LATCH, INDUCTION HOPPER LID, STAINLESS STEEL	1
8	GA5004397	NUT M6 HEX ZP	4
9	GA5048115	NUT M6 NYLOC ZP	5
10	GA5003487	R CLIP S10 3mm	1
11	GA5004437	WASHER 6mm FLAT SS	18
GA4909588 GOLDACRES		ASSEMBLY DRAWING ONLY, BILBERRY CAM POST LOWER FOLDING ASSEMBLY, 250mm	REV 00

Camera Mount Assembly, Bilberry

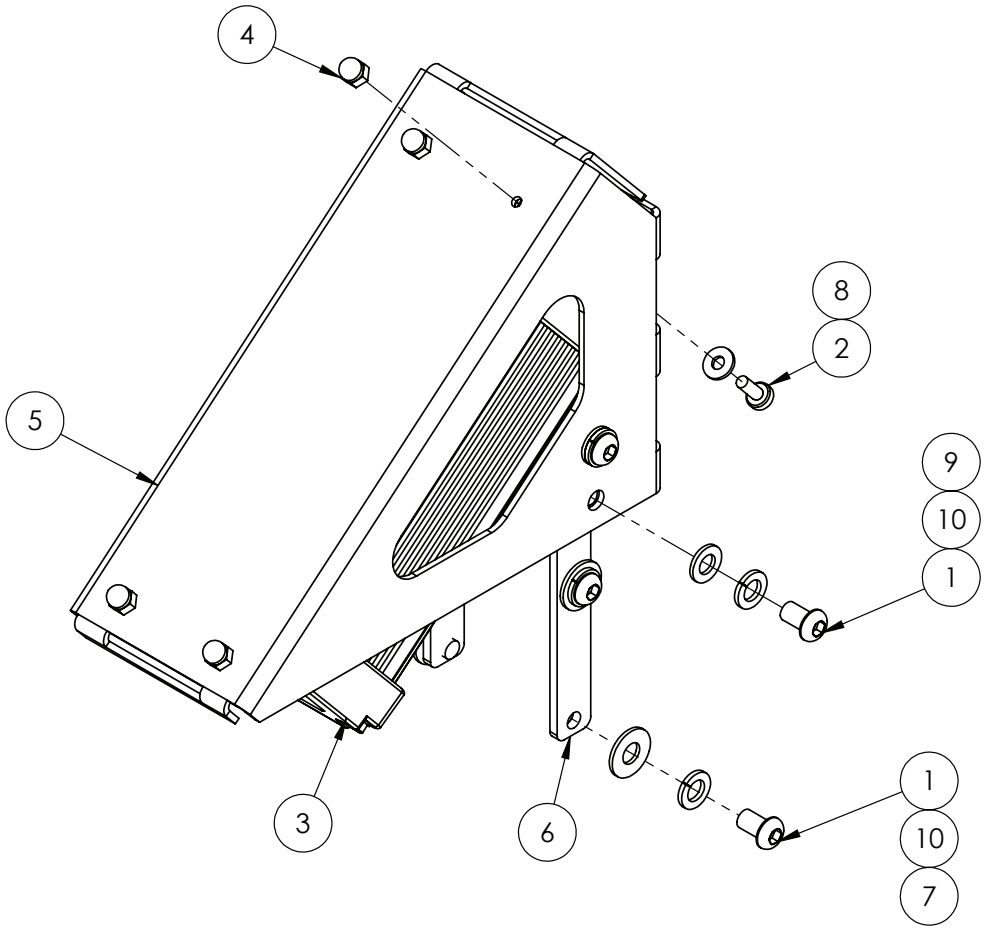

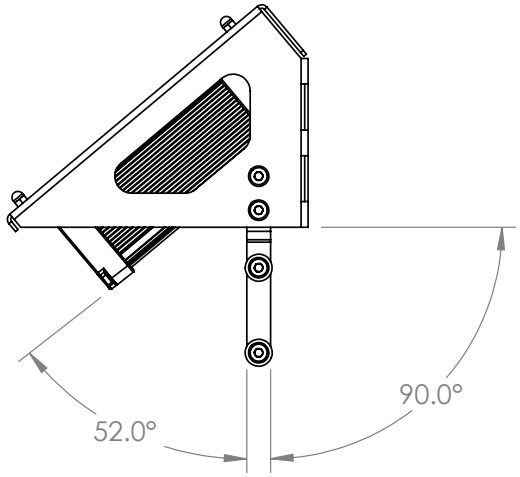

IF DESCRIPTION PREFIX IS ASSEMBLY DRAWING ONLY OR PRODUCTION DRAWING ONLY THE ITEM IS NOT FOR SALE			
ITEM	PART NUMBER	DESCRIPTION	QTY
1	GA5004023	BHCS M6 X 10 SS A2-70	8
2	GA5011360	BOLT PAN HEAD M4 X 10 SS	4
3	GA3001041	CAMERA, BILBERRY, GEN 3, NUMBER 1, BILBERRY, CAM-AG-HK-GEN3	1
4	GA0500114	DOME NUT, M4, 304 SS	4
5	GA4525040	MOUNTING BRACKET, BILBERRY CAMERA, ADJUSTABLE	1
6	GA4525111	T SLOT THREADED INSERT, 4 HOLE, M6, CAMERA MOUNT	2
7	GA5017643	WASHER 1/4 ID X 5/8 OD X 18G FLAT SS	4
8	GA5020510	WASHER 4mm FLAT SS	4
9	GA5004437	WASHER 6mm FLAT SS	4
10	GA5004447	WASHER 6mm SPRING SS	8
GA4912710 GOLDACRES		ASSEMBLY DRAWING ONLY, BILBERRY CAMERA MOUNT ASSEMBLY	REV 02

LOOSE FIT LOWER TWO BOLTS
LOCTITE 243 - TO BE USED ON ALL FITTINGS

Bilberry, Camera Positioning, LH

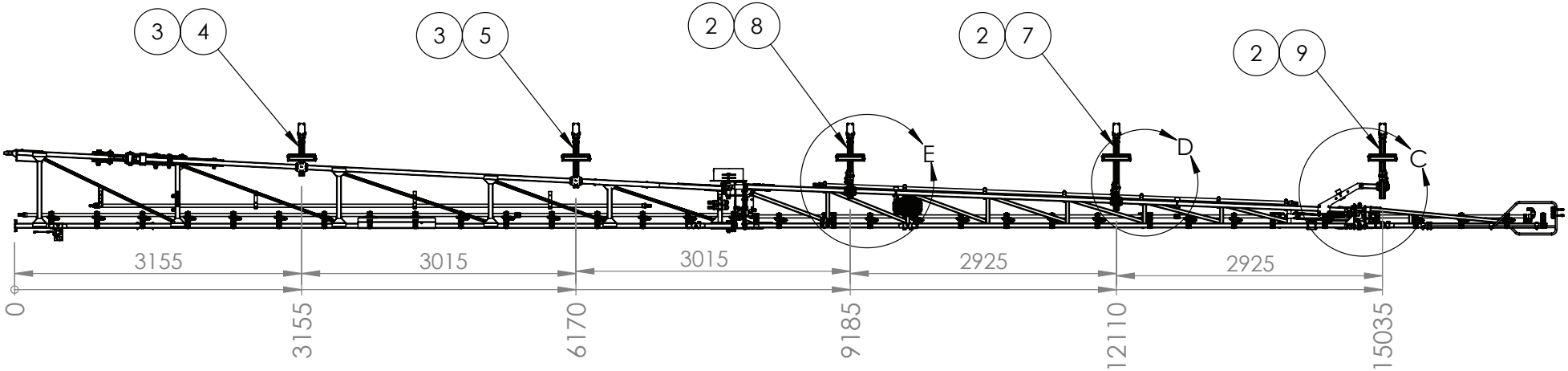

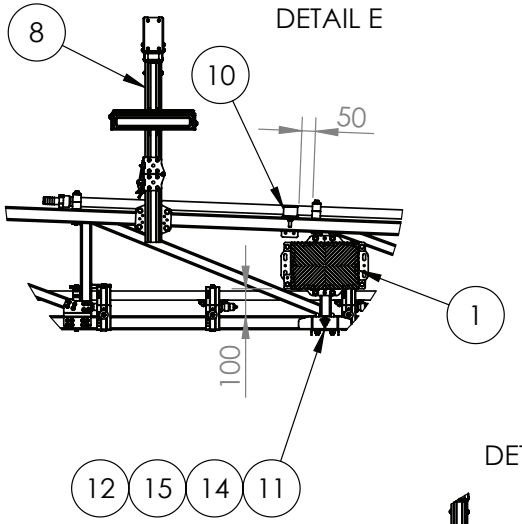

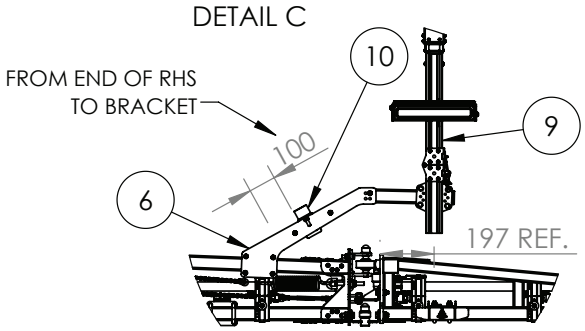

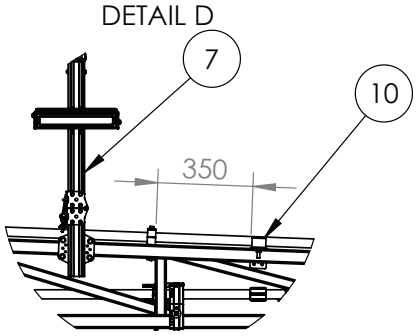

IF DESCRIPTION PREFIX IS ASSEMBLY DRAWING ONLY OR PRODUCTION DRAWING ONLY THE ITEM IS NOT FOR SALE			
ITEM	PART NUMBER	DESCRIPTION	QTY
1	GA4912820	ASSEMBLY DRAWING ONLY, BILBERRY CALC MODULE MOUNT GEN 3	1
2	GA4909580	ASSEMBLY DRAWING ONLY, BILBERRY CAM POST BOOM MOUNT, LH TRITECH, FRONT	3
3	GA4909574	ASSEMBLY DRAWING ONLY, BILBERRY CAM POST BOOM MOUNT, LH TRITECH, REAR	2
4	GA6101955	ASSEMBLY DRAWING ONLY, BILBERRY CAMERA POST CAM03/CAM04	1
5	GA6101956	ASSEMBLY DRAWING ONLY, BILBERRY CAMERA POST CAM05/CAM06	1
6	GA4909469	ASSEMBLY DRAWING ONLY, BILBERRY OUTER CAMERA MOUNT ARM SUIT 50mm SHS	1
7	GA6101958	ASSEMBLY DRAWING ONLY, BILBERRY CAMERA POST FOLDING CAM09 LH ASSEMBLY FITTED	1
8	GA6101957	ASSEMBLY DRAWING ONLY, BILBERRY CAMERA POST FOLDING LH CAM07 ASSEMBLY FITTED	1
9	GA6101959	ASSEMBLY DRAWING ONLY, BILBERRY CAMERA POST FOLDING LH CAM11 ASSEMBLY FITTED	1
10	GA4909468	ASSEMBLY DRAWING ONLY, CAM POST REST STOPPER	3
11	GA4411280	BRACKET, RAVEN XRT RADAR SENSOR / LIGHT MOUNT, BOOM, WITH FRONT SHIELD	1
12	GA5051445	NUT M10 NYLOC SS	4
13	GA0500080	RIVET, 1/4" DIA, 4.7 - 11.1mm GRIP RANGE, STEEL, HUCKLOK	12
14	GA5053645	U BOLT SQUARE TOP M10 X 52 X 75	2
15	GA5000117	WASHER 10mm FLAT SS HD	4
GA6101963-07 GOLDACRES		ASSEMBLY DRAWING ONLY. BOOM WING ASSEMBLY, 36M LH, TRITECH, S2 G4, MY24	REV 01

Bilberry, Camera Positioning, RH

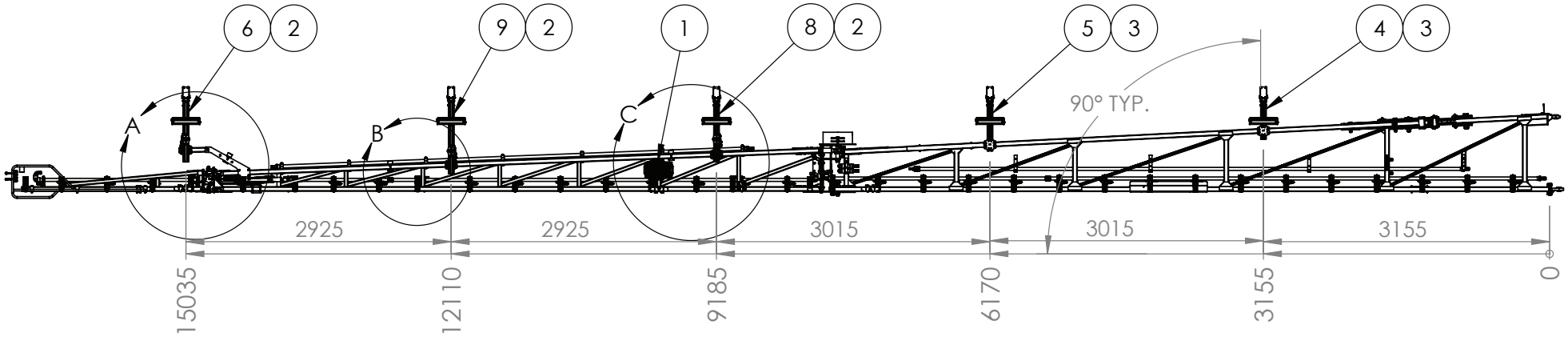

DETAIL A

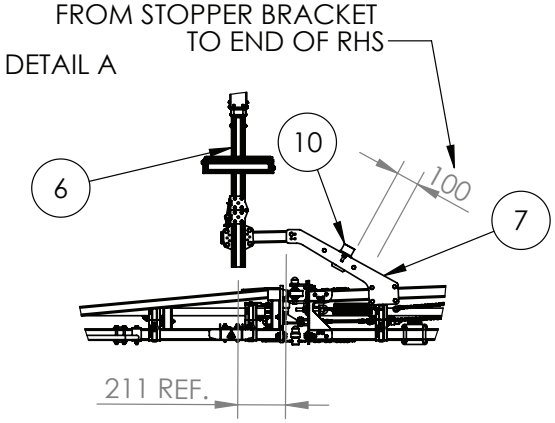

DETAIL C

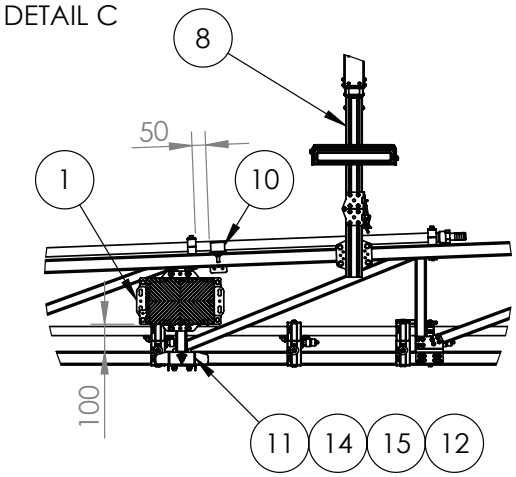

DETAIL B

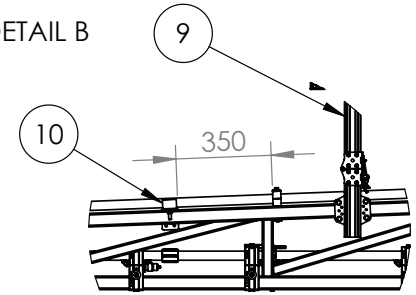

IF DESCRIPTION PREFIX IS ASSEMBLY DRAWING ONLY OR PRODUCTION DRAWING ONLY THE ITEM IS NOT FOR SALE			
ITEM	PART NUMBER	DESCRIPTION	QTY
1	GA4912820	ASSEMBLY DRAWING ONLY, BILBERRY CALC MODULE MOUNT GEN 3	1
2	GA4909581	ASSEMBLY DRAWING ONLY, BILBERRY CAM POST BOOM MOUNT, RH TRITECH, FRONT	3
3	GA4909575	ASSEMBLY DRAWING ONLY, BILBERRY CAM POST BOOM MOUNT, RH TRITECH, REAR	2
4	GA6101955	ASSEMBLY DRAWING ONLY, BILBERRY CAMERA POST CAM03/CAM04	1
5	GA6101956	ASSEMBLY DRAWING ONLY, BILBERRY CAMERA POST CAM05/CAM06	1
6	GA6101960	ASSEMBLY DRAWING ONLY, BILBERRY FOLDING CAMERA POST, RH CAM12	1
7	GA4909469	ASSEMBLY DRAWING ONLY, BILBERRY OUTER CAMERA MOUNT ARM SUIT 50mm SHS	1
8	GA6101961	ASSEMBLY DRAWING ONLY, BILBERRY CAMERA POST FOLDING RH CAM08 ASSEMBLY FITTED	1
9	GA6101962	ASSEMBLY DRAWING ONLY, BILBERRY CAMERA POST FOLDING RH CAM10 ASSEMBLY FITTED	1
10	GA4909468	ASSEMBLY DRAWING ONLY, CAM POST REST STOPPER	3
11	GA4411280	BRACKET, RAVEN XRT RADAR SENSOR / LIGHT MOUNT, BOOM, WITH FRONT SHIELD	1
12	GA5051445	NUT M10 NYLOC SS	4
13	GA0500080	RIVET, 1/4" DIA, 4.7 - 11.1mm GRIP RANGE, STEEL, HUCKLOK	12
14	GA5053645	U BOLT SQUARE TOP M10 X 52 X 75	2
15	GA5000117	WASHER 10mm FLAT SS HD	4
GA6101964-07 GOLDACRES		ASSEMBLY DRAWING ONLY, BOOM WING ASSEMBLY, 36M RH, TRITECH, S2 G4, MY24	REV 01

20 - Height Control

Raven XRT, Rotary & Angle Sensor Mounting

REPLACEMENT PARTS			
ITEM	PART NUMBER	DESCRIPTION	QTY
A	GA3000381	ROTARY SENSOR, TILTS, XRT, SENSOR AND MAGNET, RTP050HVNAA, NO GRUB SCREWS, 50 DEGREE	-

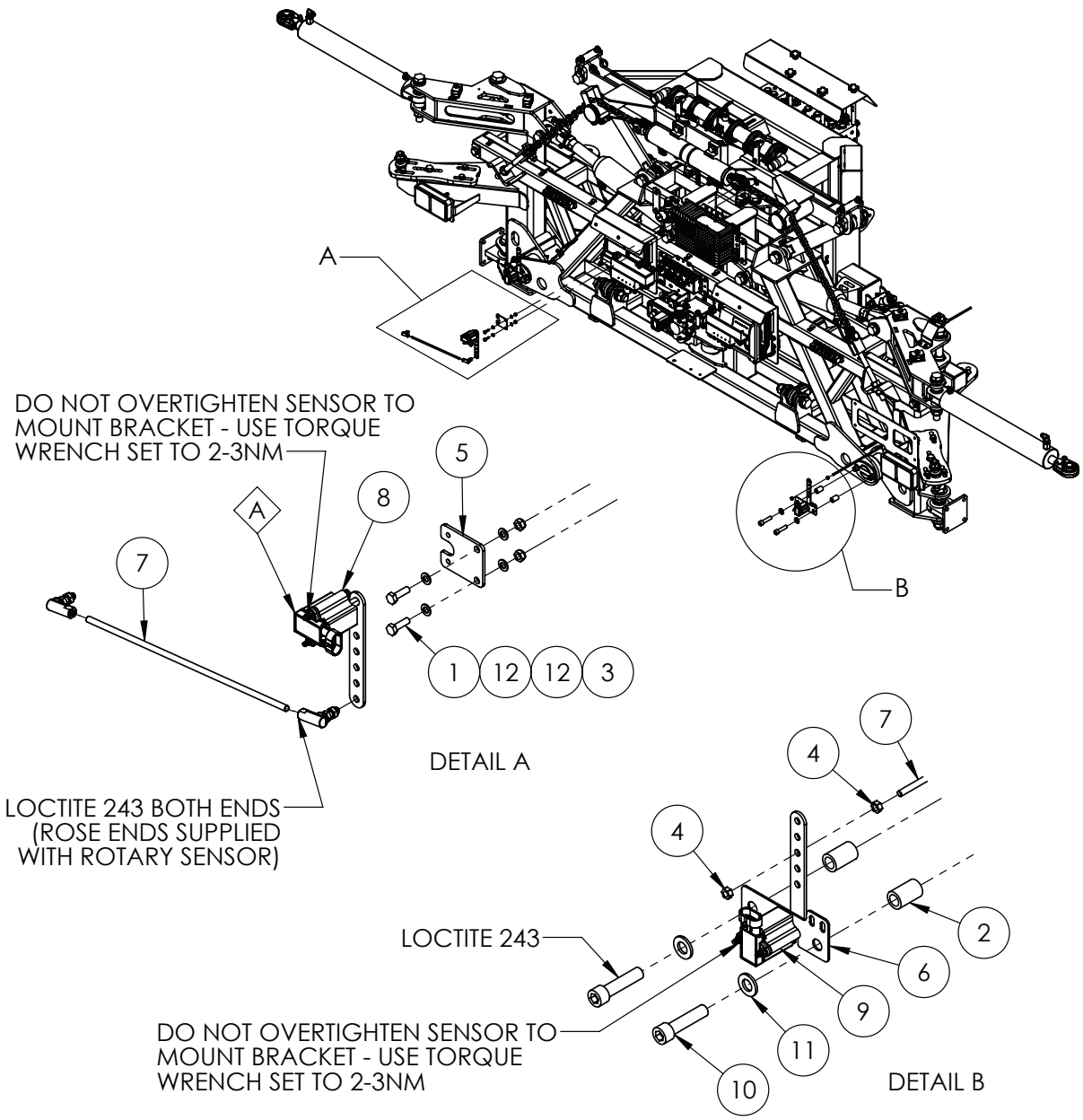

ALL ITEMS ON THIS PAGE ARE ONLY FITTED IF RAVEN XRT (30074) HAS BEEN OPTIONED

IF DESCRIPTION PREFIX IS ASSEMBLY DRAWING ONLY OR PRODUCTION DRAWING ONLY THE ITEM IS NOT FOR SALE			
ITEM	PART NUMBER	DESCRIPTION	QTY
1	GA5004065	BOLT M6 X 20 GR8.8 ZP	2
2	GA4552860	CRUSH TUBE, 12.5 ID X 19 OD X 30 LONG	4
3	GA5048115	NUT M6 NYLOC ZP	2
4	GA5004397	NUT M6 ZP	4
5	GA4406430	PLATE, MOUNT, RAVEN SLANT ANGLE SENSOR	1
6	GA4406431	PLATE, MOUNT, RAVEN SLANT ANGLE SENSOR SUIT 2011 CENTER	2
7	GA4551340	ROD, THREADED M6, 300mm LONG, SUIT ROLL ANGLE SENSOR XRT	3
8	GA3000378	ROTARY SENSOR KIT, WITH LOOSE HARDWARE, RTP, 50 DEGREE, RAVEN XRT, 11170235009	1
9	GA3000378	ROTARY SENSOR KIT, WITH LOOSE HARDWARE, RTP, 50 DEGREE, RAVEN XRT, 11170235009	2
10	GA5051470	SHCS M12 X 50 GR12.9 ZP	4
11	GA5000577	WASHER 12mm FLAT SS HD	4
12	GA5004437	WASHER 6mm FLAT SS	4
GA6101310-11 GOLDACRES		CENTRE AND PARALIFT REAR ASSEMBLY, G4, MY24	REV 02.A

Raven XRT Boom Modules & Centre Section Height Sensor

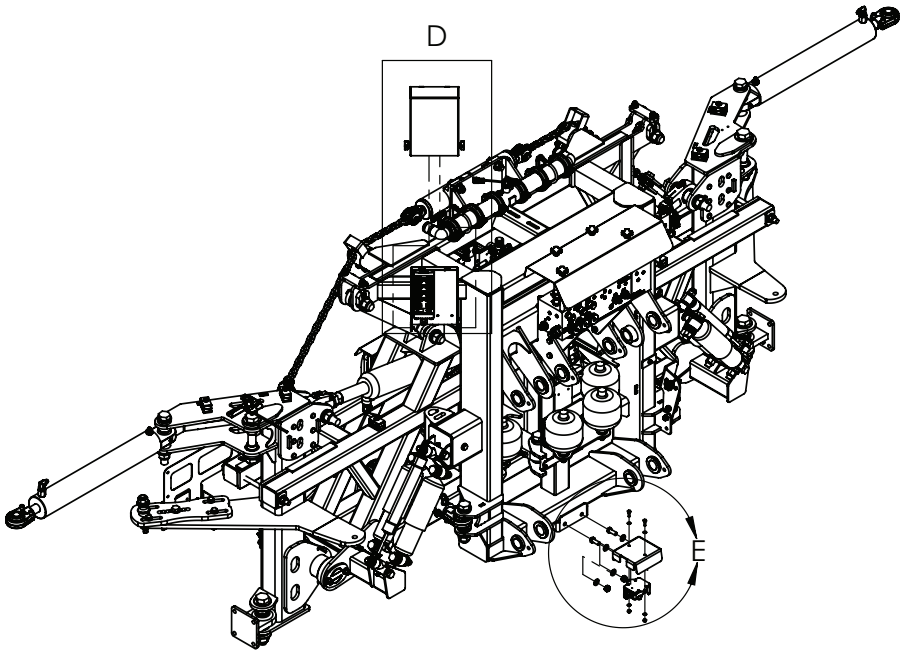

DETAIL E

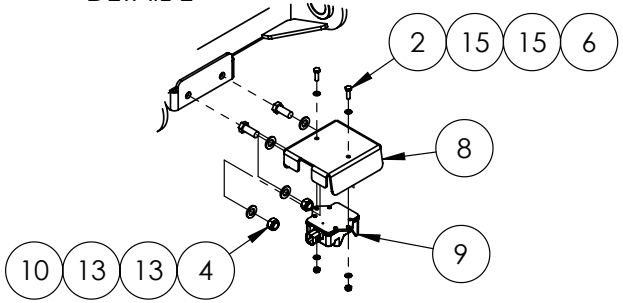

ITEMS IN DETAIL E ONLY FITTED
IF RAVEN XRT (30074) OPTIONED.

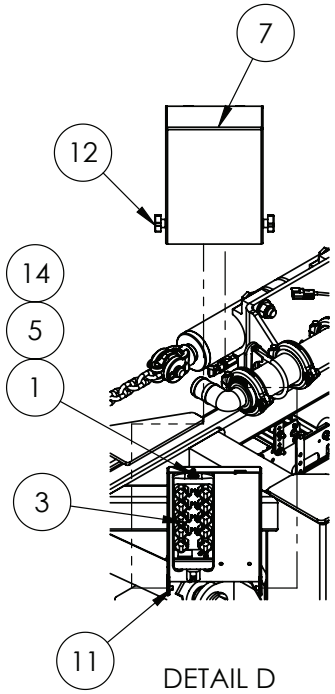

DETAIL D

IF DESCRIPTION PREFIX IS ASSEMBLY DRAWING ONLY OR PRODUCTION DRAWING ONLY THE ITEM IS NOT FOR SALE			
ITEM	PART NUMBER	DESCRIPTION	QTY
1	GA0500004	BHCS M5 X 20 SS A2-70	3
2	GA5004065	BOLT M6 X 20 GR8.8 ZP	2
3	GA3000309	I/O MODULE, 16 OUTPUT CHANNELS, CR2051, IFM, G6 BOOM MODULE A	1
4	GA5012461	NUT M12 NYLOC ZP	2
5	GA5003974	NUT M5 NYLOC ZP	3
6	GA5048115	NUT M6 NYLOC ZP	2
7	GA4406165	PLATE, IO MODULE COVER, PARALIFT REAR	1
8	GA4406545	PLATE, RADAR SENSOR BRACKET, RAVEN XRT, CENTRE SECTION, TRITECH MY20	1
9	GA3000382	SENSOR, RAVEN XRT BOOM HEIGHT RADAR, 063-0173-962	1
10	GA5000305	SET SCREW M12 X 30 GR8.8 ZP	2
11	GA5066830	SPEED CLIP M6	2
12	GA5069965	STAR KNOB 40 OD M6 X 20	2
13	GA5000577	WASHER 12mm FLAT SS HD	4
14	GA5003983	WASHER 5mm FLAT SS	3
15	GA5004437	WASHER 6mm FLAT SS	4
GA6101310-11 GOLDACRES		CENTRE AND PARALIFT REAR ASSEMBLY, G4, MY24	REV 02.A

Raven XRT, Expansion Module Mounting

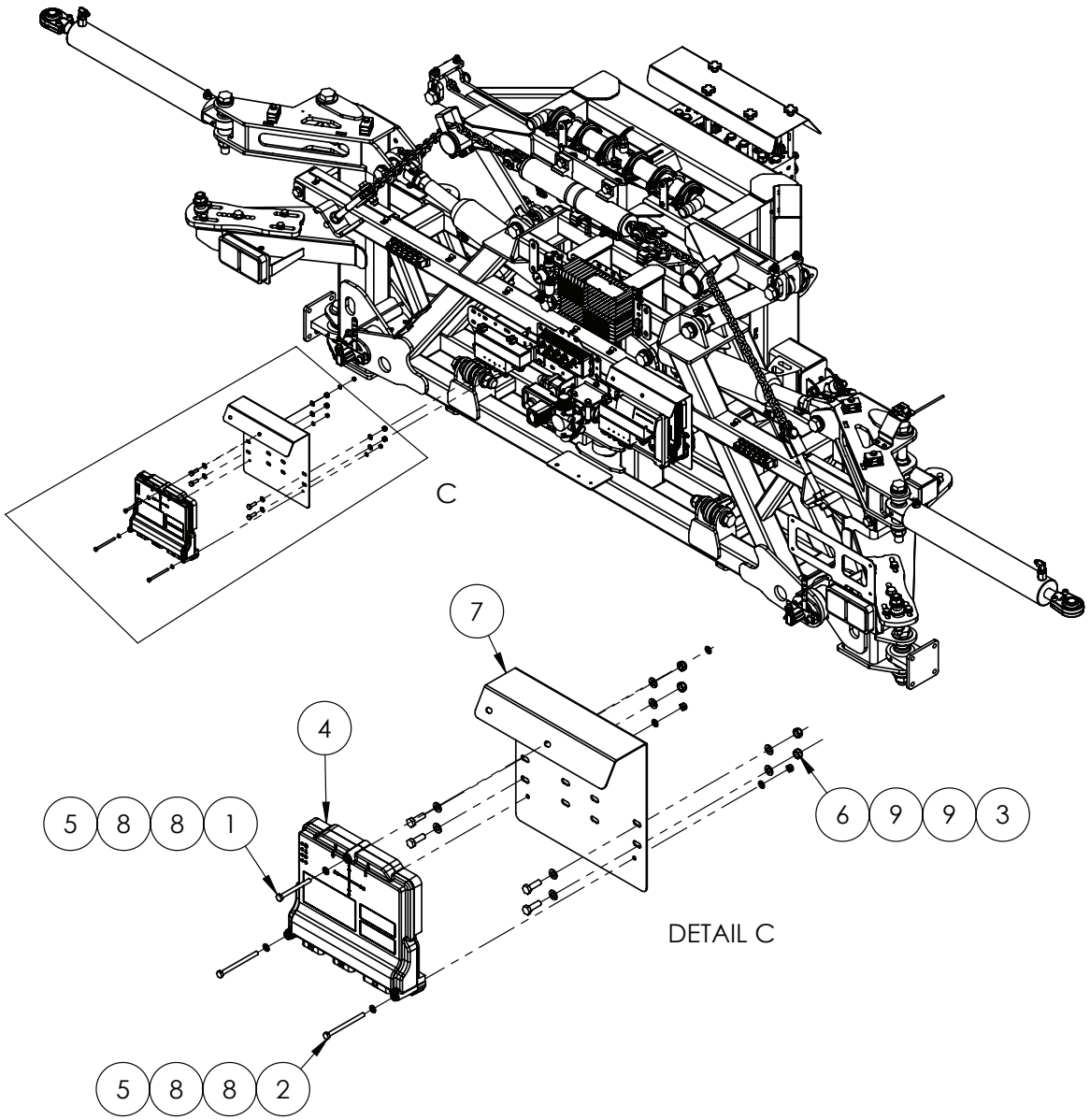

ALL ITEMS ON THIS PAGE ARE ONLY FITTED
IF RAVEN XRT (30074) HAS BEEN OPTIONED.

IF DESCRIPTION PREFIX IS ASSEMBLY DRAWING ONLY OR PRODUCTION DRAWING ONLY THE ITEM IS NOT FOR SALE			
ITEM	PART NUMBER	DESCRIPTION	QTY
1	GA5050175	BOLT M6 X 65 GR8.8 ZP	1
2	GA5011439	BOLT M6 X 80 GR8.8 ZP	2
3	GA5004711	BOLT M8 X 25 GR8.8 ZP	4
4	GA3000371	ECU, ISOBUS, RAVEN EXPANSION MODULE, REM, XRT 063-0173-965	1
5	GA5048115	NUT M6 NYLOC ZP	3
6	GA5004917	NUT M8 NYLOC ZP	4
7	GA4404570	PLATE, MOUNT, RCM NODE	1
8	GA5004437	WASHER 6mm FLAT SS	6
9	GA5003643	WASHER 8mm FLAT SS HD	8
GA6101310-11 GOLDACRES		CENTRE AND PARALIFT REAR ASSEMBLY, G4, MY24	REV 02.A

21 - Schematics

Hydraulic Schematic, Chassis, Fixed Axle

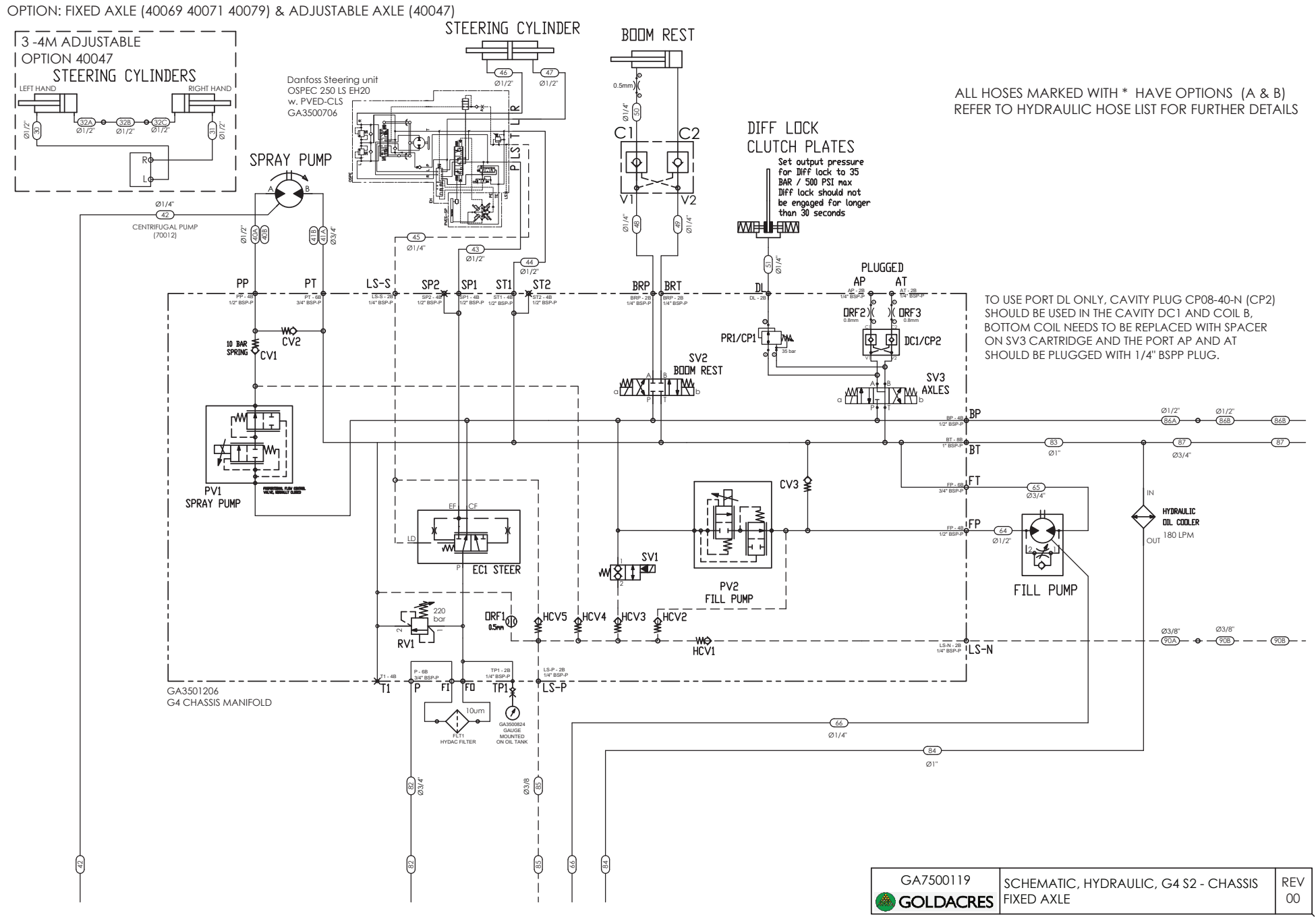

GA7500119 GOLDACRES	SCHEMATIC, HYDRAULIC, G4 S2 - CHASSIS FIXED AXLE	REV 00

Hydraulic Schematic, Chassis, Adjustable Axle

OPTION: ADJUSTABLE AXLE 2-3m (40077)

ALL HOSES MARKED WITH * HAVE OPTIONS (A & B)
REFER TO HYDRAULIC HOSE LIST FOR FURTHER DETAILS

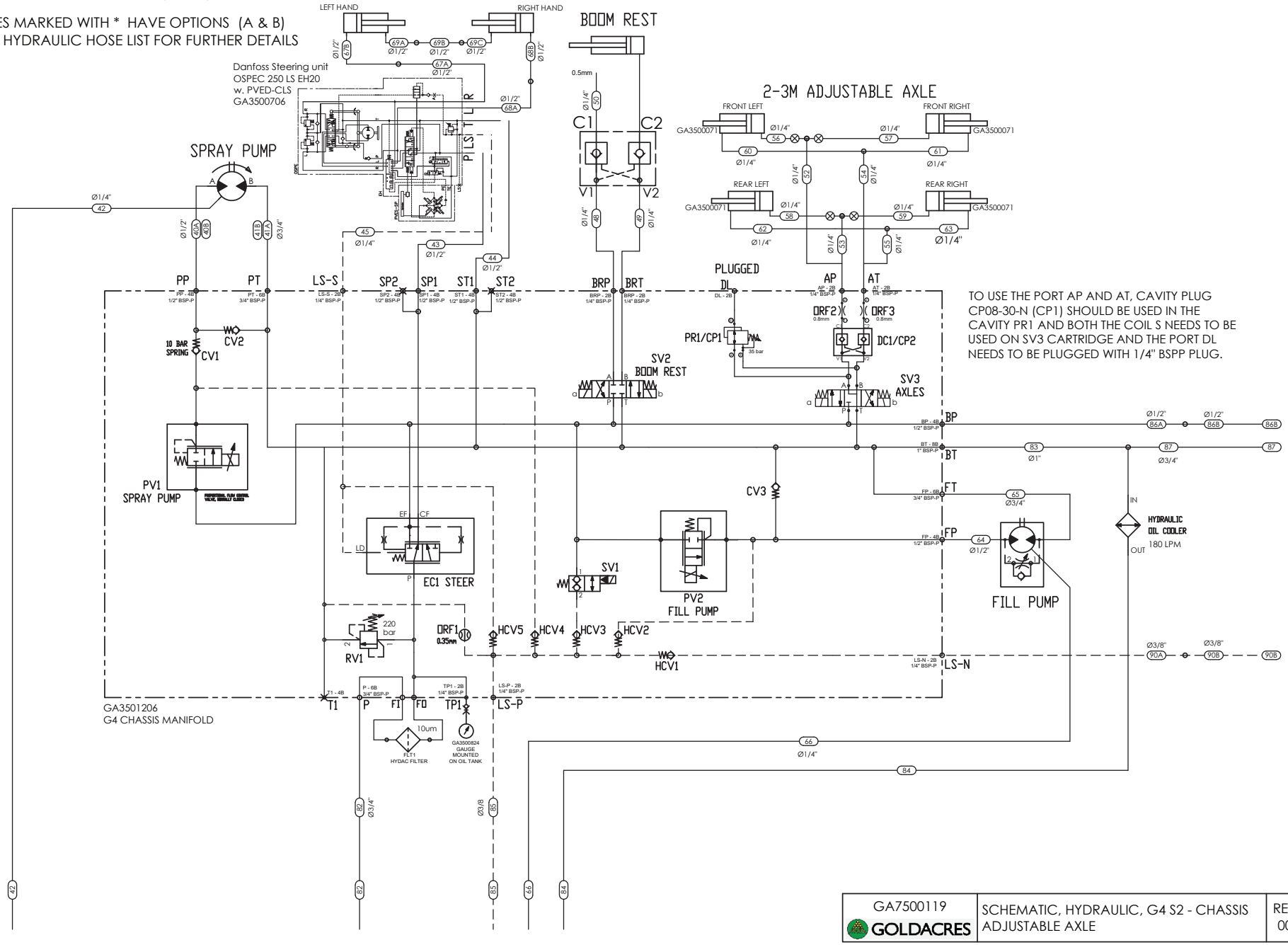

TO USE THE PORT AP AND AT, CAVITY PLUG CP08-30-N (CP1) SHOULD BE USED IN THE CAVITY PR1 AND BOTH THE COIL S NEEDS TO BE USED ON SV3 CARTRIDGE AND THE PORT DL NEEDS TO BE PLUGGED WITH 1/4" BSPP PLUG.

GA7500119 GOLDACRES	SCHEMATIC, HYDRAULIC, G4 S2 - CHASSIS ADJUSTABLE AXLE	REV 00

ALL HOSES MARKED WITH * HAVE OPTIONS (A & B)
REFER TO HYDRAULIC HOSE LIST FOR FURTHER DETAILS

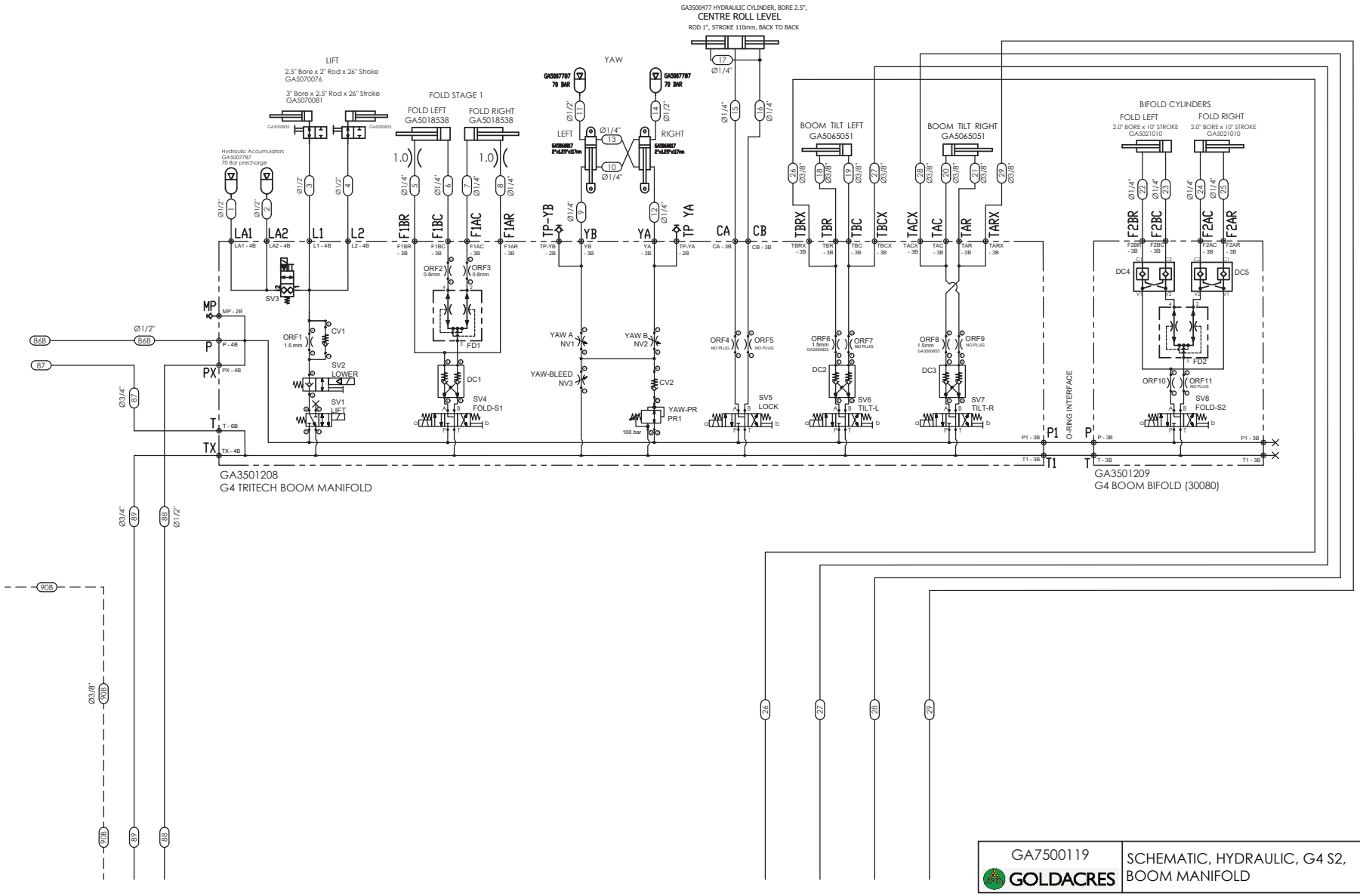

GA7500119	SCHEMATIC, HYDRAULIC, G4 S2, BOOM MANIFOLD	REV 00
GOLDACRES		

Hydraulic Schematic, Boom Manifold

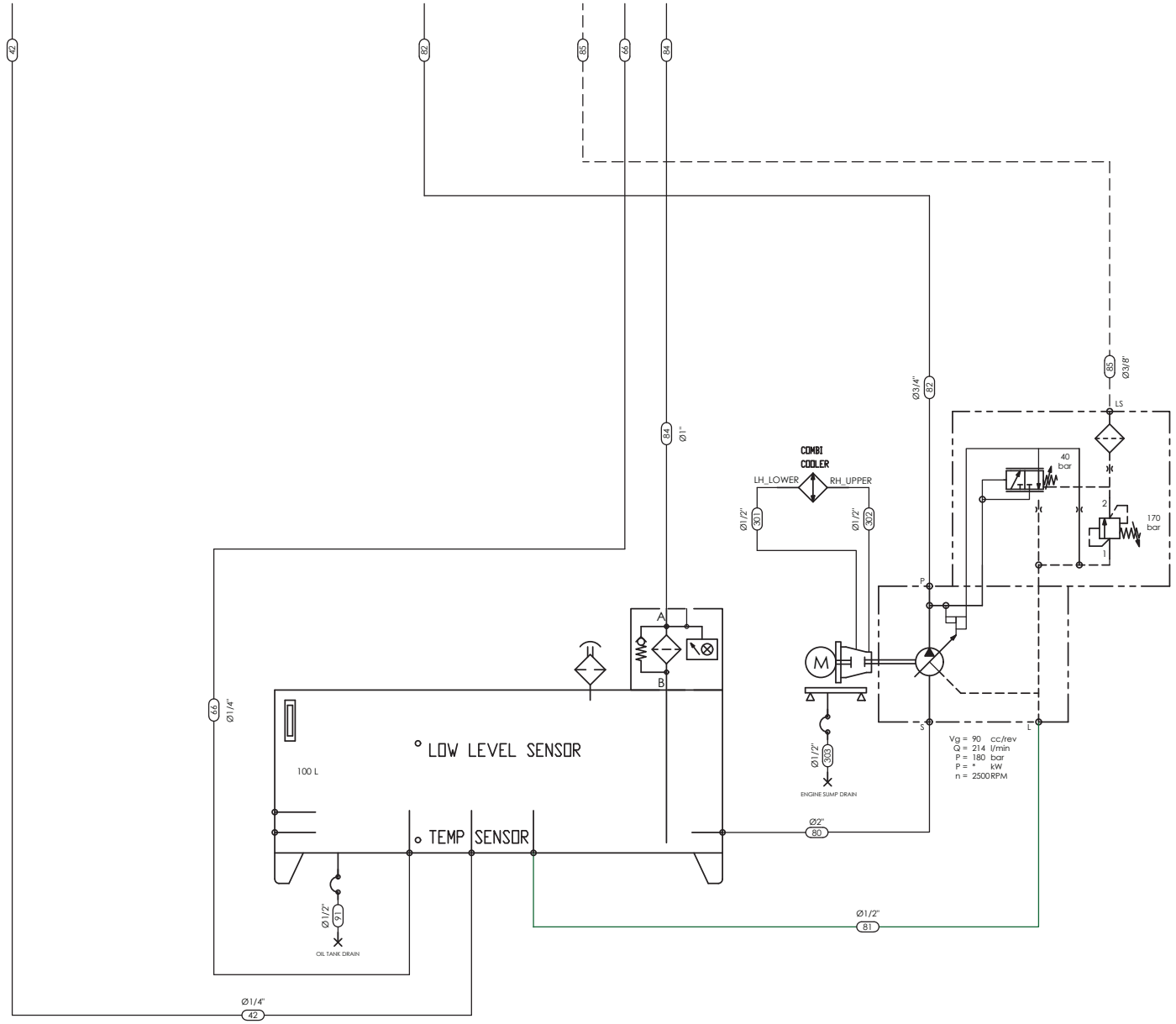

ALL HOSES MARKED WITH * HAVE OPTIONS (A & B)
REFER TO HYDRAULIC HOSE LIST FOR FURTHER DETAILS

GA7500119 GOLDACRES	SCHEMATIC, HYDRAULIC, G4 S2 - TANK AND PUMPS	REV 00

Hydraulic Schematic, Raven XRT Manifold

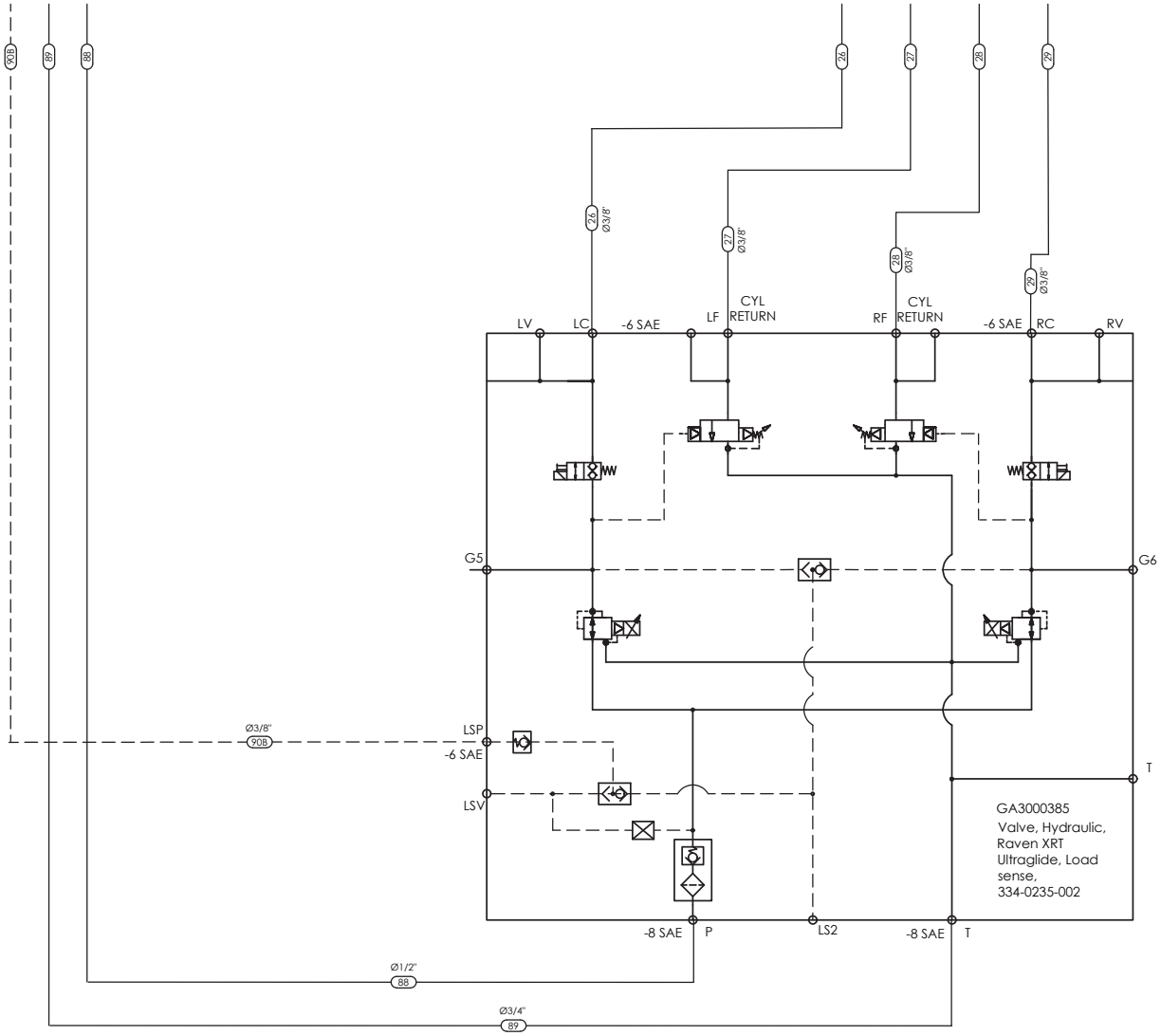

OPTION: XRT AUTO HEIGHT CONTROLLER WITH 5 SENSORS (30074)

ALL HOSES MARKED WITH * HAVE OPTIONS (A & B)
REFER TO HYDRAULIC HOSE LIST FOR FURTHER DETAILS

GA7500119 GOLDACRES	SCHEMATIC, HYDRAULIC, G4 S2, BOOM MANIFOLD	REV 00

Hydraulic Schematic, Cooler, Transfer Case

ALL HOSES MARKED WITH * HAVE OPTIONS (A & B)
REFER TO HYDRAULIC HOSE LIST FOR FURTHER DETAILS

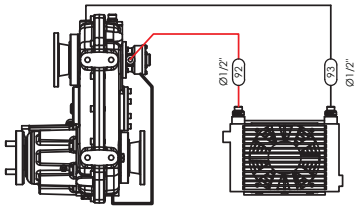

4WD TRANSFER CASE COOLER

GA7500119 GOLDACRES	SCHEMATIC, STEERING AND ADJUSTABLE AXLE	REV 00

Plumbing Schematic, Diaphragm Pump, (No Weedetect Option)

65256 - NO WEEDETECT OPTION
70011 - PUMP OPTION

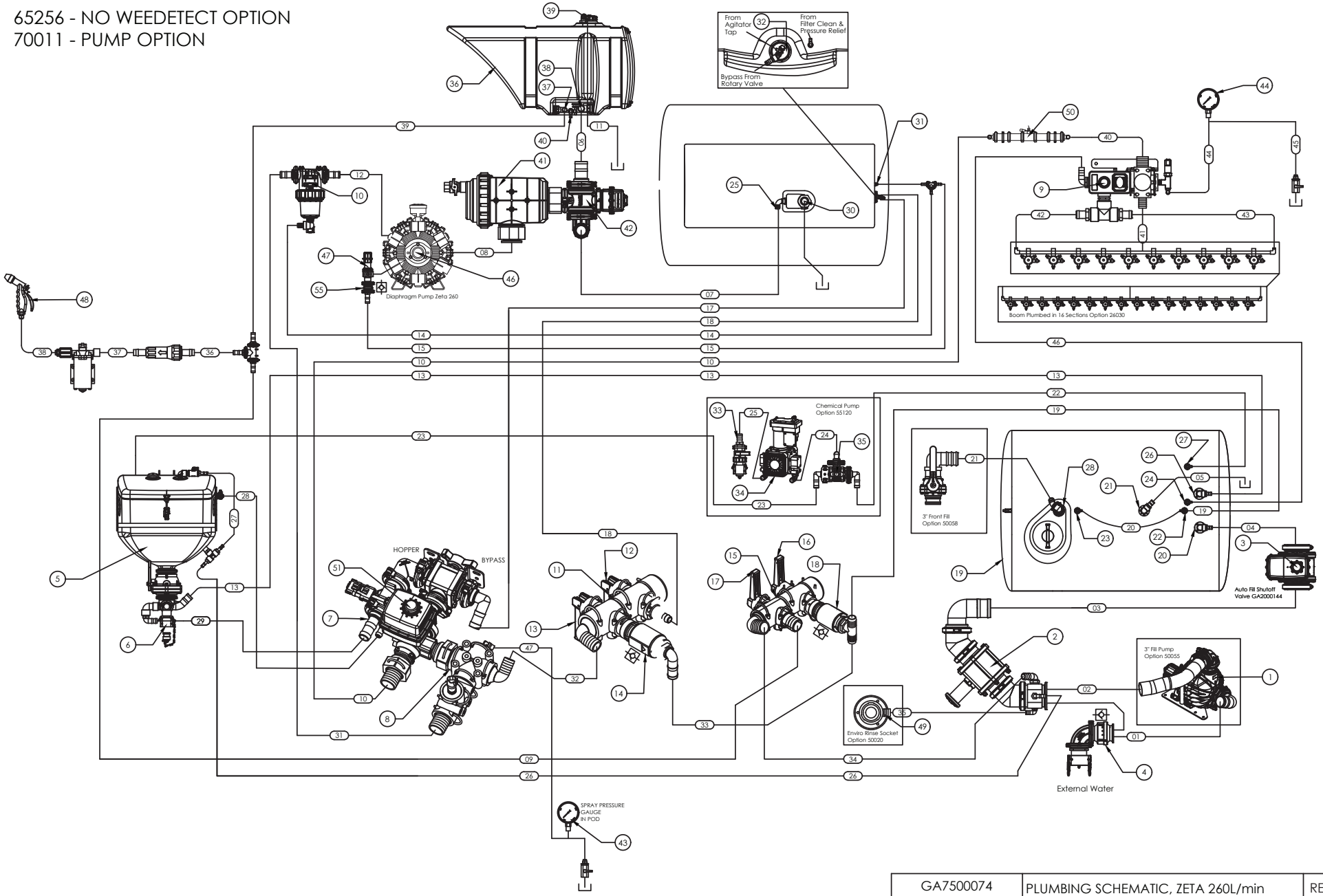

GA7500074 GOLDACRES	PLUMBING SCHEMATIC, ZETA 260L/min DIAPHRAGM PUMP, G4 S2, MY24	REV 00

Plumbing Schematic, Diaphragm Pump, (No Weedetect Option)

65256 - NO WEEDETECT OPTION
70011 - PUMP OPTION

(X) FEATURE DESCRIPTIONS

ITEM	GA NUMBER	DESCRIPTION
1	GA4952200	FILL PUMP 3" HYPRO
2	GA4952645 or GA4952660	FILL VALVE MANIFOLD ASSEMBLY
3	GA2000144	3" TANK FILL 2 WAY ELECTRIC BALL VALVE PROPORTIONAL
4	GA2000088	3" CHECK VALVE
5	GA6101681	HOPPER
6	-	1" CHEMICAL INDUCTION PROBE ON HOPPER
7	-	HOPPER TEE
8	GA4952195	SPRAY PRESSURE CONTROL MANIFOLD
9	GA4949455	FLOW DISTRIBUTOR AND BOOM RECIRCULATION VALVE
10	GA4952045	PRESSURE FILTER
11	GA4952205	PRESSURE RINSE VALVE MANIFOLD
12	-	AGITATOR RINSE FLIP VALVE
13	-	MAIN TANK RINSE FLIP VALVE
14	GA5002473	1" CHECK VALVE
15	GA4952655	FILL RINSE VALVE MANIFOLD
16	-	MAIN TANK RINSE FLIP VALVE
17	-	RINSE TANK FILL FLIP VALVE
18	GA5002473	1" CHECK VALVE
19	GA6101710	MAIN TANK
20	GA4914190	MAIN TANK, TANK FILL INLET
21	GA4907845	MAIN TANK, TANK OVERFLOW OUTLET
22	GA4901285-2	MAIN TANK, TANK RINSE NOZZLE A
23	GA4901285-1	MAIN TANK, TANK RINSE NOZZLE B
24	GA4909035	MAIN TANK, BOOM RECIRCULATION TANK INLET
25	-	MAIN TANK, PUMP OUTLET
26	GA4909045	MAIN TANK, HOPPER INLET
27	GA4909035	MAIN TANK, CHEMICAL INDUCTION PUMP TANK INLET
28	GA4914195	MAIN TANK, FRONT FILL TANK INLET
29	N/A	
30	GA5078204	MAIN TANK, DRAIN OUTLET
31	-	MAIN TANK, PRESSURE FILTER INLET
32	GA4908705	MAIN TANK AGITATOR
33	GA4952080	1' CHEMICAL INDUCTION PROBE BALL VALVE (CHEM PUMP)
34	GA4909225	CHEMICAL PUMP
35	GA4952210	CHEMICAL PUMP, 3 WAY BOTTOM ENTRY BALL VALVE
36	GA4952565	RINSE TANK
37	-	RINSE TANK, FILL INLET
38	-	RINSE TANK, PUMP OUTLET
39	-	RINSE TANK, OVERFLOW
40	GA5018315	RINSE TANK, DRAIN VALVE
41	GA2000101	SUCTION FILTER
42	GA2000143	SPRAY PUMP, SUPPLY SUCTION VALVE
43	GA3500693	SPRAY PRESSURE GAUGE - LOCATED IN PLUMBING POD
44	GA5075420	SPRAY PRESSURE GAUGE - LOCATED IN CONTROL COWL
45	N/A	CENTRIFUGAL PUMP
46	GA4952230	DIAPHRAGM SPRAY PUMP
47	GA5075640	RELIEF VALVE (ONLY FITTED WITH DIAPHRAGM PUMP)
48	GA4950925	WASH DOWN GUN
49	GA5018800	MICROMATIC RINSE SOCKET
50	GA4908545	BOOM FLOW METER ASSEMBLY
51	GA2000065	BOOM SPRAY CONTROL VALVE, 3 WAY ELECTRIC BALL VALVE PROPORTIONAL
52	GA5077899	BOOM SPRAY BYPASS VALVE, 3 WAY BOTTOM LOAD BALL VALVE
53	GA5018321	GAUGE DRAIN VALVE - POD
54	GA5018322	GAUGE DRAIN VALVE - CONTROL COWL
55	GA5077889	CHECK VALVE, 1" MANIFOLD FLANGE

(XX) HOSE LIST

HOSE	SIZE	DESCRIPTION	LENGTH	
01	3" PVC	MAIN TANK FILL FROM CAMLOCK TO FILL PUMP OPTION 50055	500	
02	3" PVC	MAIN TANK FILL FROM PUMP TO FILL VALVE OPTION 50056	500	
03	3" PVC	MAIN TANK FILL FROM FILL VALVE TO FILL SHUTOFF VALVE	2300	
04	3" PVC	MAIN TANK FILL FROM FILL SHUTOFF VALVE TO TANK	2000	
05	3" PVC	MAIN TANK OVERFLOW	3500	
06	2" S	RINSE TANK TO PUMP SUPPLY CONTROL VALVE	970	
07	2" S	MAIN TANK TO PUMP SUPPLY CONTROL VALVE	800	
08	2" S	SUCTION FILTER TO SPRAY PUMP (GA7500074 ONLY)	700	
09	1 1/4" P	FILL RINSE MANIFOLD TO RINSE LINE TEE	100	
10	1 1/2"P	SPRAY CONTROL VALVE TO FLOW METER	5400	
11	1 1/2" PVC	RINSE TANK OVERFLOW TO GROUND	1000	
12	1 1/2" P	SPRAY PUMP TO PRESSURE FILTER	1000	
13	1 1/2" PVC	HOPPER OUTLET TO MAIN TANK	6500	
14	1" P	PRESSURE FILTER DRAIN TO MAIN TANK	2200	
15	1 1/4" P	PRESSURE RELIEF VALVE TO MAIN TANK (GA7500074 ONLY)	2200	
16	8mm NYLON	CENTRIFUGAL PUMP PRESSURE RELIEF VALVE TO TANK	6000	
17	1 1/4" P	HOPPER/BYPASS VALVE TO MAIN TANK AGITATOR	2100	
18	1/2" P	AGITATOR FLIP VALVE TO AGITATOR JET	2200	
19	3/4" P	PRESSURE RINSE MANIFOLD TEE TO TANK RINSE NOZZLE A	4000	
20	3/4" P	TANK RINSE NOZZLE A TO TANK RINSE NOZZLE B	850	
21	3" PVC	FRONT FILL 3"BALL VALVE TO MAIN TANK (WHERE FITTED)	4200	
22	1" P	CHEM PUMP 3 WAY BALL VALVE TO MAIN TANK	4000	
23	1" P	CHEM PUMP 3 WAY BALL VALVE TO HOPPER (WHERE FITTED)	2900	
24	1" P	CHEM PUMP TO 3 WAY BALL VALVE (WHERE FITTED)	240	
25	1" S	CHEM BALL VALVE TO CHEM PUMP (WHERE FITTED)	260	
26	1/2" P	FILL ASSEMBLY TO HOPPER DRUM RINSE TEE	3000	
27	1/2" P	HOPPER DRUM RINSE TEE TO HOPPER RINSE VALVE - LID	850	
28	1/2" P	HOPPER PRESSURE TEE TO HOPPER MIXING JET BALL VALVE	3500	
29	1" P	HOPPER PRESSURE TEE TO HOPPER BOTOM VENTURI PORT	3500	
30	-			
31	1 1/2" P	PRESSURE FILTER TO PRESSURE MANIFOLD	750	
32	1" P	PRESSURE MANIFOLD TO PRESSURE RINSE MANIFOLD	165	
33	3/4" P	FILL RINSE FLIP VALVE TO PRESSURE RINSE MANIFOLD TEE	105	
34	1 1/4" P	FILL ASSEMBLY TO FILL RINSE MANIFOLD	400	
35	3/4" P	FILL RINSE MANIFOLD TO MICROMATIC RINSE SOCKET (WHERE FITTED)	500	
36	1/2" P	RINSE LINE TEE TO WASH DOWN GUN FILTER	350	
37	1/2" P	WASH DOWN GUN FILTER TO WASHDOWN GUN PUMP	80	
38	1/2" P	WASHDOWN GUN PUMP TO WASHDOWN GUN	3700	
39	1 1/4" P	RINSE LINE TEE TO RINSE TANK	3100	
40	1 1/2" P	FLOW METER TO BOOM FLOW DISTRIBUTOR	1100	
41	1" P	BOOM FLOW DISTRIBUTOR TO BOOM POLY CENTRE	0	
42	1" P	BOOM FLOW DISTRIBUTOR TO LEFT BOOM POLY END		*** BOOM LENGTH DEPENDENT
43	1" P	BOOM FLOW DISTRIBUTOR TO RIGHT BOOM POLY END		*** BOOM LENGTH DEPENDENT
44	6MM NYLON	BOOM RECIRCULATION VALVE TO PRESSURE GAUGE	10000	*** BOOM LENGTH DEPENDENT
45	6MM NYLON	PRESSURE GAUGE TO DRAIN VALVE	6000	
46	1" P	BOOM RECIRC VALVE TO MAIN TANK	5600	

GA7500074 GOLDACRES	PLUMBING SCHEMATIC, ZETA 260L/min DIAPHRAGM PUMP, G4 S2, MY24	REV 00

Plumbing Schematic, Centrifugal Pump, (No Weedetect Option)

65256 - NO WEEDETECT OPTION
70012 - PUMP OPTION

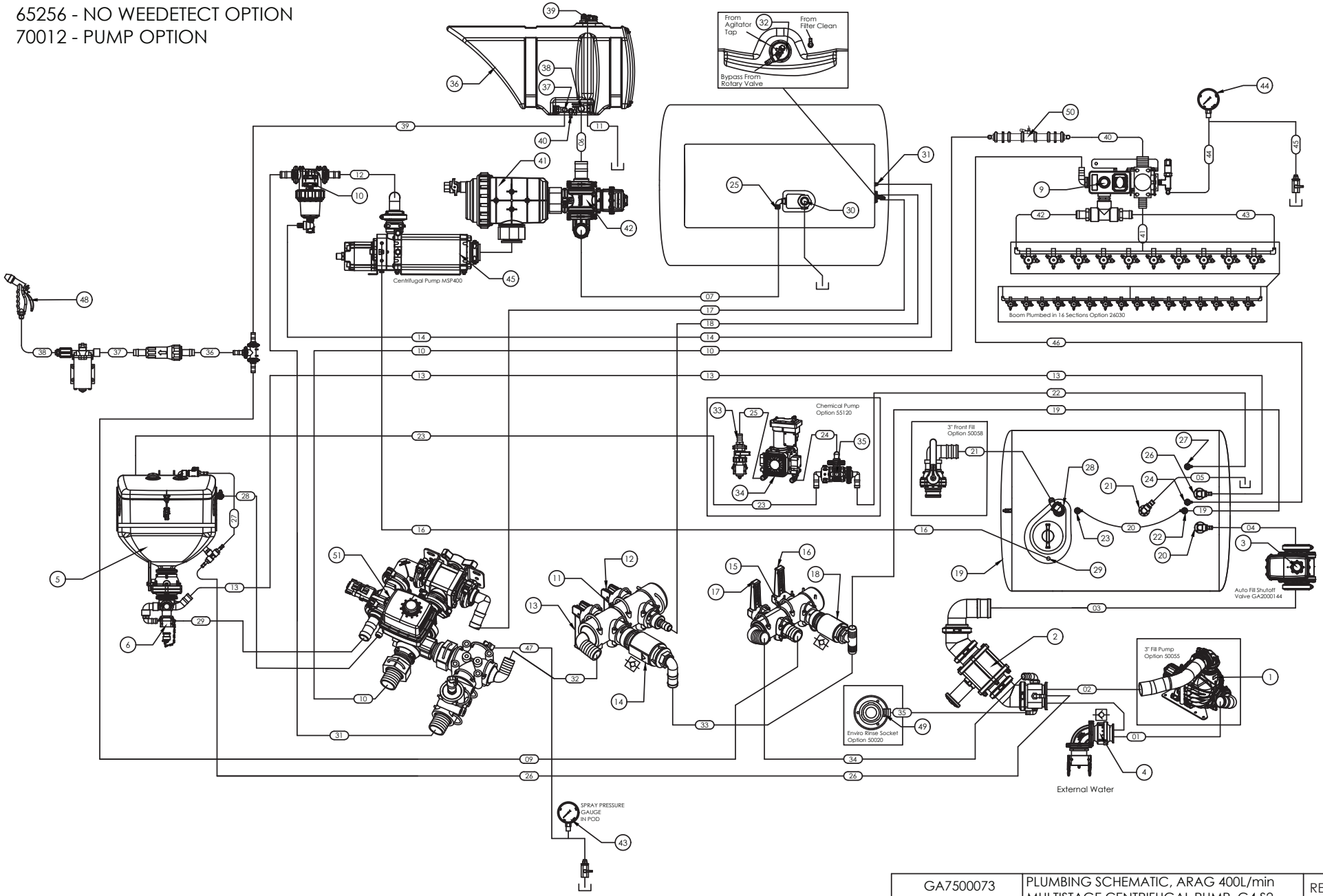

GA7500073 GOLDACRES	PLUMBING SCHEMATIC, ARAG 400L/min MULTISTAGE CENTRIFUGAL PUMP, G4 S2, MY24	REV 00

Plumbing Schematic, Centrifugal Pump, (No Weedetect Option)

65256 - NO WEEDETECT OPTION
70012 - PUMP OPTION

(X) FEATURE DESCRIPTIONS

ITEM	GA NUMBER	DESCRIPTION
1	GA4952200	FILL PUMP 3" HYPRO
2	GA4952645 or GA4952660	FILL VALVE MANIFOLD ASSEMBLY
3	GA2000144	3" TANK FILL 2 WAY ELECTRIC BALL VALVE PROPORTIONAL
4	GA2000088	3" CHECK VALVE
5	GA6101681	HOPPER
6	-	1" CHEMICAL INDUCTION PROBE ON HOPPER
7	-	HOPPER TEE
8	GA4952195	SPRAY PRESSURE CONTROL MANIFOLD
9	GA4949455	FLOW DISTRIBUTOR AND BOOM RECIRCULATION VALVE
10	GA4952045	PRESSURE FILTER
11	GA4952205	PRESSURE RINSE VALVE MANIFOLD
12	-	AGITATOR RINSE FLIP VALVE
13	-	MAIN TANK RINSE FLIP VALVE
14	GA5002473	1" CHECK VALVE
15	GA4952655	FILL RINSE VALVE MANIFOLD
16	-	MAIN TANK RINSE FLIP VALVE
17	-	RINSE TANK FILL FLIP VALVE
18	GA5002473	1" CHECK VALVE
19	GA6101710	MAIN TANK
20	GA4914190	MAIN TANK, TANK FILL INLET
21	GA4907845	MAIN TANK, TANK OVERFLOW OUTLET
22	GA4901285-2	MAIN TANK, TANK RINSE NOZZLE A
23	GA4901285-1	MAIN TANK, TANK RINSE NOZZLE B
24	GA4909035	MAIN TANK, BOOM RECIRCULATION TANK INLET
25	-	MAIN TANK, PUMP OUTLET
26	GA4909045	MAIN TANK, HOPPER INLET
27	GA4909035	MAIN TANK, CHEMICAL INDUCTION PUMP TANK INLET
28	GA4914195	MAIN TANK, FRONT FILL TANK INLET
29	GA5052690	MAIN TANK, CENTRIFUGAL PUMP VENT INLET
30	GA5078204	MAIN TANK, DRAIN OUTLET
31	-	MAIN TANK, PRESSURE FILTER INLET
32	GA4908705	MAIN TANK AGITATOR
33	GA4952080	1' CHEMICAL INDUCTION PROBE BALL VALVE (CHEM PUMP)
34	GA4909225	CHEMICAL PUMP
35	GA4952210	CHEMICAL PUMP, 3 WAY BOTTOM ENTRY BALL VALVE
36	GA4952565	RINSE TANK
37	-	RINSE TANK, FILL INLET
38	-	RINSE TANK, PUMP OUTLET
39	-	RINSE TANK, OVERFLOW
40	GA5018315	RINSE TANK, DRAIN VALVE
41	GA2000101	SUCTION FILTER
42	GA2000143	SPRAY PUMP, SUPPLY SUCTION VALVE
43	GA3500693	SPRAY PRESSURE GAUGE - LOCATED IN PLUMBING POD
44	GA5075420	SPRAY PRESSURE GAUGE - LOCATED IN CONTROL COWL
45	GA4949420	CENTRIFUGAL PUMP
46	N/A	DIAPHRAGM SPRAY PUMP
47	N/A	RELIEF VALVE (ONLY FITTED WITH DIAPHRAGM PUMP)
48	GA4950925	WASH DOWN GUN
49	GA5018800	MICROMATIC RINSE SOCKET
50	GA4908545	BOOM FLOW METER ASSEMBLY
51	GA2000065	BOOM SPRAY CONTROL VALVE, 3 WAY ELECTRIC BALL VALVE PROPORTIONAL
52	GA5077899	BOOM SPRAY BYPASS VALVE, 3 WAY BOTTOM LOAD BALL VALVE
53	GA5018321	GAUGE DRAIN VALVE - POD

(XX) HOSE LIST

HOSE	SIZE	DESCRIPTION	LENGTH	
01	3" PVC	MAIN TANK FILL FROM CAMLOCK TO FILL PUMP OPTION 50055	500	
02	3" PVC	MAIN TANK FILL FROM PUMP TO FILL VALVE OPTION 50056	Blue Hose	
03	3" PVC	MAIN TANK FILL FROM FILL VALVE TO FILL SHUTOFF VALVE	2300	
04	3" PVC	MAIN TANK FILL FROM FILL SHUTOFF VALVE TO TANK	2000	
05	3" PVC	MAIN TANK OVERFLOW	3500	
06	2" S	RINSE TANK TO PUMP SUPPLY CONTROL VALVE	970	
07	2" S	MAIN TANK TO PUMP SUPPLY CONTROL VALVE	390	
08	2" S	SUCTION FILTER TO SPRAY PUMP	N/A	
09	1 1/4" P	FILL RINSE MANIFOLD TO RINSE LINE TEE	100	
10	1 1/2"P	SPRAY CONTROL VALVE TO FLOW METER	5300	
11	1 1/2" PVC	RINSE TANK OVERFLOW TO GROUND	1000	
12	1 1/2" P	SPRAY PUMP TO PRESSURE FILTER	1000	
13	1 1/2" PVC	HOPPER OUTLET TO MAIN TANK	6500	
14	1" P	PRESSURE FILTER DRAIN TO MAIN TANK	2200	
15	1 1/4" P	PRESSURE RELIEF VALVE TO MAIN TANK (GA7500074 ONLY)	N/A	
16	8mm NYLON	CENTRIFUGAL PUMP PRESSURE RELIEF VALVE TO TANK	6000	
17	1-1/4" P	HOPPER/BYPASS VALVE TO MAIN TANK AGITATOR	2100	
18	1/2" P	AGITATOR FLIP VALVE TO AGITATOR JET	2200	
19	3/4" P	PRESSURE RINSE MANIFOLD TEE TO TANK RINSE NOZZLE A	4000	
20	3/4" P	TANK RINSE NOZZLE A TO TANK RINSE NOZZLE B	850	
21	3" PVC	FRONT FILL 3"BALL VALVE TO MAIN TANK (WHERE FITTED)	4500	
22	1" P	CHEM PUMP 3 WAY BALL VALVE TO MAIN TANK	4000	
23	1" P	CHEM PUMP 3 WAY BALL VALVE TO HOPPER (WHERE FITTED)	2900	
24	1" P	CHEM PUMP TO 3 WAY BALL VALVE (WHERE FITTED)	240	
25	1" S	CHEM BALL VALVE TO CHEM PUMP (WHERE FITTED)	260	
26	1/2" P	FILL ASSEMBLY TO HOPPER DRUM RINSE TEE	3000	
27	1/2" P	HOPPER DRUM RINSE TEE TO HOPPER RINSE VALVE - LID	850	
28	1/2" P	HOPPER PRESSURE TEE TO HOPPER MIXING JET BALL VALVE	3500	
29	1" P	HOPPER PRESSURE TEE TO HOPPER BOTOM VENTURI PORT	3500	
30	-			
31	1 1/2" P	PRESSURE FILTER TO PRESSURE MANIFOLD	1000	
32	1" P	PRESSURE MANIFOLD TO PRESSURE RINSE MANIFOLD	165	
33	3/4" P	FILL RINSE FLIP VALVE TO PRESSURE RINSE MANIFOLD TEE	105	
34	1 1/4" P	FILL ASSEMBLY TO FILL RINSE MANIFOLD	400	
35	3/4" P	FILL RINSE MANIFOLD TO MICROMATIC RINSE SOCKET (WHERE FITTED)	500	
36	1/2" P	RINSE LINE TEE TO WASH DOWN GUN FILTER	320	
37	1/2" P	WASH DOWN GUN FILTER TO WASHDOWN GUN PUMP	80	
38	1/2" P	WASHDOWN GUN PUMP TO WASHDOWN GUN	3700	
39	1 1/4" P	RINSE LINE TEE TO RINSE TANK	3100	
40	1 1/2" P	FLOW METER TO BOOM FLOW DISTRIBUTOR	1100	
41	1" P	BOOM FLOW DISTRIBUTOR TO BOOM POLY CENTRE	0	
42	1" P	BOOM FLOW DISTRIBUTOR TO LEFT BOOM POLY END		*** BOOM LENGTH DEPENDENT
43	1" P	BOOM FLOW DISTRIBUTOR TO RIGHT BOOM POLY END		*** BOOM LENGTH DEPENDENT
44	6MM NYLON	BOOM RECIRCULATION VALVE TO PRESSURE GAUGE	10000	*** BOOM LENGTH DEPENDENT
45	6MM NYLON	PRESSURE GAUGE TO DRAIN VALVE	5000	
46	1" P	BOOM RECIRC VALVE TO MAIN TANK	5500	

GA7500073 GOLDACRES	PLUMBING SCHEMATIC, ARAG 400L/min MULTISTAGE CENTRIFUGAL PUMP, G4 S2, MY24	REV 00

Plumbing Schematic, Centrifugal Pump, (Weedetect with Raven 3TS)

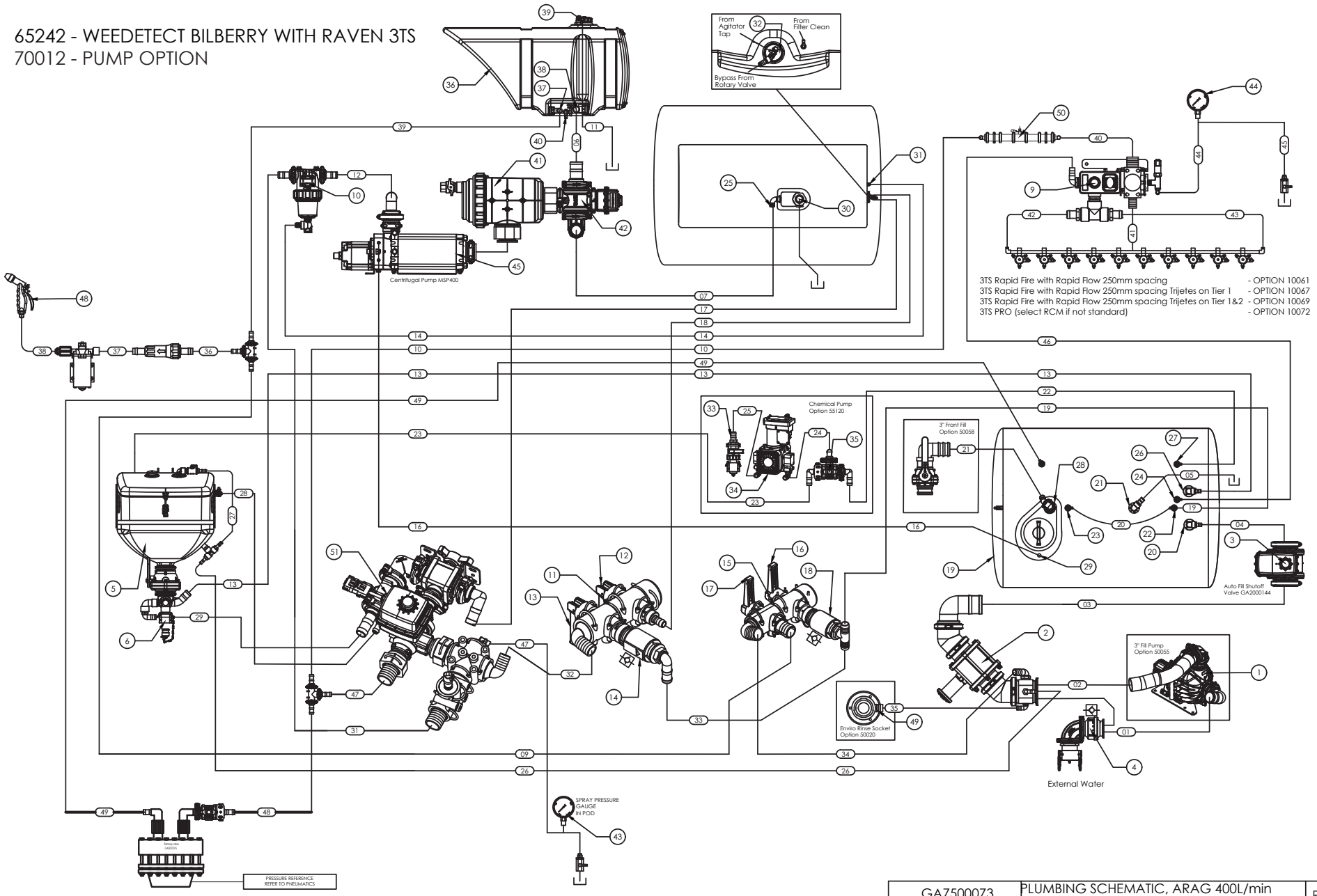

GA7500073 GOLDACRES	PLUMBING SCHEMATIC, ARAG 400L/min MULTISTAGE CENTRIFUGAL PUMP,WEEDETECT, BILBERRY WITH 3TS, G4 S2, MY24	REV 00

Plumbing Schematic, Centrifugal Pump, (Weedetect with Raven 3TS)

65242 - WEEDETECT BILBERRY WITH RAVEN 3TS
70012 - PUMP OPTION

(X) FEATURE DESCRIPTIONS

ITEM	GA NUMBER	DESCRIPTION
1	GA4952200	FILL PUMP 3" HYPRO
2	GA4952645 or GA4952660	FILL VALVE MANIFOLD ASSEMBLY
3	GA2000144	3" TANK FILL 2 WAY ELECTRIC BALL VALVE PROPORTIONAL
4	GA2000088	3" CHECK VALVE
5	GA6101681	HOPPER
6	-	1" CHEMICAL INDUCTION PROBE ON HOPPER
7	-	HOPPER TEE
8	GA4952195	SPRAY PRESSURE CONTROL MANIFOLD
9	GA4949455	FLOW DISTRIBUTOR AND BOOM RECIRCULATION VALVE
10	GA4952045	PRESSURE FILTER
11	GA4952205	PRESSURE RINSE VALVE MANIFOLD
12	-	AGITATOR RINSE FLIP VALVE
13	-	MAIN TANK RINSE FLIP VALVE
14	GA5002473	1" CHECK VALVE
15	GA4952655	FILL RINSE VALVE MANIFOLD
16	-	MAIN TANK RINSE FLIP VALVE
17	-	RINSE TANK FILL FLIP VALVE
18	GA5002473	1" CHECK VALVE
19	GA6101710	MAIN TANK
20	GA4914190	MAIN TANK, TANK FILL INLET
21	GA4907845	MAIN TANK, TANK OVERFLOW OUTLET
22	GA4901285-2	MAIN TANK, TANK RINSE NOZZLE A
23	GA4901285-1	MAIN TANK, TANK RINSE NOZZLE B
24	GA4909035	MAIN TANK, BOOM RECIRCULATION TANK INLET
25	-	MAIN TANK, PUMP OUTLET
26	GA4909045	MAIN TANK, HOPPER INLET
27	GA4909035	MAIN TANK, CHEMICAL INDUCTION PUMP TANK INLET
28	GA4914195	MAIN TANK, FRONT FILL TANK INLET
29	GA5052690	MAIN TANK, CENTRIFUGAL PUMP VENT INLET
30	GA5078204	MAIN TANK, DRAIN OUTLET
31	-	MAIN TANK, PRESSURE FILTER INLET
32	GA4908705	MAIN TANK AGITATOR
33	GA4952080	1' CHEMICAL INDUCTION PROBE BALL VALVE (CHEM PUMP)
34	GA4909225	CHEMICAL PUMP
35	GA4952210	CHEMICAL PUMP, 3 WAY BOTTOM ENTRY BALL VALVE
36	GA4952565	RINSE TANK
37	-	RINSE TANK, FILL INLET
38	-	RINSE TANK, PUMP OUTLET
39	-	RINSE TANK, OVERFLOW
40	GA5018315	RINSE TANK, DRAIN VALVE
41	GA2000101	SUCTION FILTER
42	GA2000143	SPRAY PUMP, SUPPLY SUCTION VALVE
43	GA3500693	SPRAY PRESSURE GAUGE - LOCATED IN PLUMBING POD
44	GA5075420	SPRAY PRESSURE GAUGE - LOCATED IN CONTROL COWL
45	GA4949420	CENTRIFUGAL PUMP
46	N/A	DIAPHRAGM SPRAY PUMP
47	N/A	RELIEF VALVE (ONLY FITTED WITH DIAPHRAGM PUMP)
48	GA4950925	WASH DOWN GUN
49	GA5018800	MICROMATIC RINSE SOCKET
50	GA4908545	BOOM FLOW METER ASSEMBLY
51	GA2000065	BOOM SPRAY CONTROL VALVE, 3 WAY ELECTRIC BALL VALVE PROPORTIONAL
52	GA5077899	BOOM SPRAY BYPASS VALVE, 3 WAY BOTTOM LOAD BALL VALVE
53	GA5018321	GAUGE DRAIN VALVE - POD

(XX) HOSE LIST

HOSE	SIZE	DESCRIPTION	LENGTH	
01	3" PVC	MAIN TANK FILL FROM CAMLOCK TO FILL PUMP OPTION 50055	500	
02	3" PVC	MAIN TANK FILL FROM PUMP TO FILL VALVE OPTION 50056	Blue Hose	
03	3" PVC	MAIN TANK FILL FROM FILL VALVE TO FILL SHUTOFF VALVE	2300	
04	3" PVC	MAIN TANK FILL FROM FILL SHUTOFF VALVE TO TANK	2000	
05	3" PVC	MAIN TANK OVERFLOW	3500	
06	2" S	RINSE TANK TO PUMP SUPPLY CONTROL VALVE	970	
07	2" S	MAIN TANK TO PUMP SUPPLY CONTROL VALVE	390	
08	2" S	SUCTION FILTER TO SPRAY PUMP	N/A	
09	1 1/4" P	FILL RINSE MANIFOLD TO RINSE LINE TEE	100	
10	1 1/2"P	SPRAY CONTROL VALVE TO FLOW METER	5300	
11	1 1/2" PVC	RINSE TANK OVERFLOW TO GROUND	1000	
12	1 1/2" P	SPRAY PUMP TO PRESSURE FILTER	1000	
13	1 1/2" PVC	HOPPER OUTLET TO MAIN TANK	6500	
14	1" P	PRESSURE FILTER DRAIN TO MAIN TANK	2200	
15	1 1/4" P	PRESSURE RELIEF VALVE TO MAIN TANK (GA7500074 ONLY)	N/A	
16	8mm NYLON	CENTRIFUGAL PUMP PRESSURE RELIEF VALVE TO TANK	6000	
17	1-1/4" P	HOPPER/BYPASS VALVE TO MAIN TANK AGITATOR	2100	
18	1/2" P	AGITATOR FLIP VALVE TO AGITATOR JET	2200	
19	3/4" P	PRESSURE RINSE MANIFOLD TEE TO TANK RINSE NOZZLE A	4000	
20	3/4" P	TANK RINSE NOZZLE A TO TANK RINSE NOZZLE B	850	
21	3" PVC	FRONT FILL 3"BALL VALVE TO MAIN TANK (WHERE FITTED)	4500	
22	1" P	CHEM PUMP 3 WAY BALL VALVE TO MAIN TANK	4000	
23	1" P	CHEM PUMP 3 WAY BALL VALVE TO HOPPER (WHERE FITTED)	2900	
24	1" P	CHEM PUMP TO 3 WAY BALL VALVE (WHERE FITTED)	240	
25	1"	CHEM BALL VALVE TO CHEM PUMP (WHERE FITTED)	260	
26	1/2" P	FILL ASSEMBLY TO HOPPER DRUM RINSE TEE	3000	
27	1/2" P	HOPPER DRUM RINSE TEE TO HOPPER RINSE VALVE - LID	850	
28	1/2" P	HOPPER PRESSURE TEE TO HOPPER MIXING JET BALL VALVE	3500	
29	1" P	HOPPER PRESSURE TEE TO HOPPER BOTOM VENTURI PORT	3500	
30	-			
31	1 1/2" P	PRESSURE FILTER TO PRESSURE MANIFOLD	1000	
32	1" P	PRESSURE MANIFOLD TO PRESSURE RINSE MANIFOLD	165	
33	3/4" P	FILL RINSE FLIP VALVE TO PRESSURE RINSE MANIFOLD TEE	105	
34	1 1/4" P	FILL ASSEMBLY TO FILL RINSE MANIFOLD	400	
35	3/4" P	FILL RINSE MANIFOLD TO MICROMATIC RINSE SOCKET (WHERE FITTED)	500	
36	1/2" P	RINSE LINE TEE TO WASH DOWN GUN FILTER	320	
37	1/2" P	WASH DOWN GUN FILTER TO WASHDOWN GUN PUMP	80	
38	1/2" P	WASHDOWN GUN PUMP TO WASHDOWN GUN	3700	
39	1 1/4" P	RINSE LINE TEE TO RINSE TANK	3100	
40	1 1/2" P	FLOW METER TO BOOM FLOW DISTRIBUTOR	1100	
41	1" P	BOOM FLOW DISTRIBUTOR TO BOOM POLY CENTRE	0	
42	1" P	BOOM FLOW DISTRIBUTOR TO LEFT BOOM POLY END		*** BOOM LENGTH DEPENDENT
43	1" P	BOOM FLOW DISTRIBUTOR TO RIGHT BOOM POLY END		*** BOOM LENGTH DEPENDENT
44	6MM NYLON	BOOM RECIRCULATION VALVE TO PRESSURE GAUGE	10000	*** BOOM LENGTH DEPENDENT
45	6MM NYLON	PRESSURE GAUGE TO DRAIN VALVE	5000	
46	1" P	BOOM RECIRC VALVE TO MAIN TANK	5500	
47	1 1/2"P	SPRAY CONTROL VALVE TO PRESSURE TEE		
48	1 1/2"P	SPRAY PRESSURE TEE TO RAMSEY VALVE		
49	1 1/2"P	RAMSEY VALVE TO MAIN TANK		

GA7500073 GOLDACRES	PLUMBING SCHEMATIC, ARAG 400L/min MULTISTAGE CENTRIFUGAL PUMP,WEEDETECT, BILBERRY WITH 3TS, G4 S2, MY24	REV 00

Plumbing Schematic, Centrifugal Pump, (Weedetect with Hawkeye)

65241 - WEEDETECT BILBERRY WITH HAWKEYE PWM
70012 - PUMP OPTION

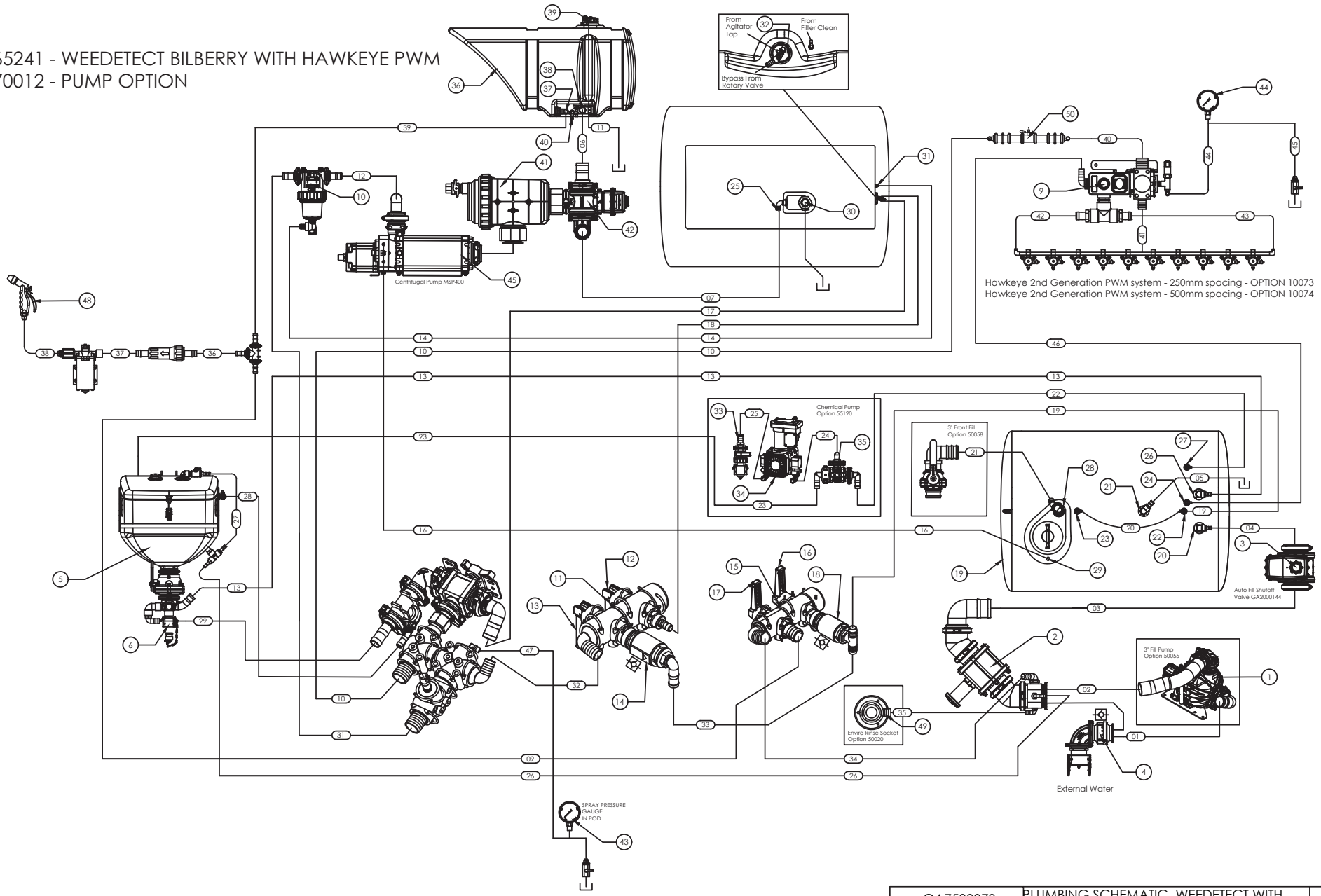

GA7500073 GOLDACRES	PLUMBING SCHEMATIC, WEEDETECT WITH HAWKEYE 2nd GENERATION PWM, G4 S2, MY24	REV 00

Plumbing Schematic, Centrifugal Pump, (Weedetect with Hawkeye)

65241 - WEEDETECT BILBERRY WITH HAWKEYE PWM
70012 - PUMP OPTION

(X) FEATURE DESCRIPTIONS

ITEM	GA NUMBER	DESCRIPTION
1	GA4952200	FILL PUMP 3" HYPRO
2	GA4952645 or GA4952660	FILL VALVE MANIFOLD ASSEMBLY
3	GA2000144	3" TANK FILL 2 WAY ELECTRIC BALL VALVE PROPORTIONAL
4	GA2000088	3" CHECK VALVE
5	GA6101681	HOPPER
6	-	1" CHEMICAL INDUCTION PROBE ON HOPPER
7	-	HOPPER TEE
8	GA4952195	SPRAY PRESSURE CONTROL MANIFOLD
9	GA4949455	FLOW DISTRIBUTOR AND BOOM RECIRCULATION VALVE
10	GA4952045	PRESSURE FILTER
11	GA4952205	PRESSURE RINSE VALVE MANIFOLD
12	-	AGITATOR RINSE FLIP VALVE
13	-	MAIN TANK RINSE FLIP VALVE
14	GA5002473	1" CHECK VALVE
15	GA4952655	FILL RINSE VALVE MANIFOLD
16	-	MAIN TANK RINSE FLIP VALVE
17	-	RINSE TANK FILL FLIP VALVE
18	GA5002473	1" CHECK VALVE
19	GA6101710	MAIN TANK
20	GA4914190	MAIN TANK, TANK FILL INLET
21	GA4907845	MAIN TANK, TANK OVERFLOW OUTLET
22	GA4901285-2	MAIN TANK, TANK RINSE NOZZLE A
23	GA4901285-1	MAIN TANK, TANK RINSE NOZZLE B
24	GA4909035	MAIN TANK, BOOM RECIRCULATION TANK INLET
25	-	MAIN TANK, PUMP OUTLET
26	GA4909045	MAIN TANK, HOPPER INLET
27	GA4909035	MAIN TANK, CHEMICAL INDUCTION PUMP TANK INLET
28	GA4914195	MAIN TANK, FRONT FILL TANK INLET
29	GA5052690	MAIN TANK, CENTRIFUGAL PUMP VENT INLET
30	GA5078204	MAIN TANK, DRAIN OUTLET
31	-	MAIN TANK, PRESSURE FILTER INLET
32	GA4908705	MAIN TANK AGITATOR
33	GA4952080	1' CHEMICAL INDUCTION PROBE BALL VALVE (CHEM PUMP)
34	GA4909225	CHEMICAL PUMP
35	GA4952210	CHEMICAL PUMP, 3 WAY BOTTOM ENTRY BALL VALVE
36	GA4952565	RINSE TANK
37	-	RINSE TANK, FILL INLET
38	-	RINSE TANK, PUMP OUTLET
39	-	RINSE TANK, OVERFLOW
40	GA5018315	RINSE TANK, DRAIN VALVE
41	GA2000101	SUCTION FILTER
42	GA2000143	SPRAY PUMP, SUPPLY SUCTION VALVE
43	GA3500693	SPRAY PRESSURE GAUGE - LOCATED IN PLUMBING POD
44	GA5075420	SPRAY PRESSURE GAUGE - LOCATED IN CONTROL COWL
45	GA4949420	CENTRIFUGAL PUMP
46	N/A	DIAPHRAGM SPRAY PUMP
47	N/A	RELIEF VALVE (ONLY FITTED WITH DIAPHRAGM PUMP)
48	GA4950925	WASH DOWN GUN
49	GA5018800	MICROMATIC RINSE SOCKET
50	GA4908545	BOOM FLOW METER ASSEMBLY
51	N/A	
52	GA5077899	BOOM SPRAY BYPASS VALVE, 3 WAY BOTTOM LOAD BALL VALVE
53	GA5018321	GAUGE DRAIN VALVE - POD

(XX) HOSE LIST

HOSE	SIZE	DESCRIPTION	LENGTH	
01	3" PVC	MAIN TANK FILL FROM CAMLOCK TO FILL PUMP OPTION 50055	500	
02	3" PVC	MAIN TANK FILL FROM PUMP TO FILL VALVE OPTION 50056	Blue Hose	
03	3" PVC	MAIN TANK FILL FROM FILL VALVE TO FILL SHUTOFF VALVE	2300	
04	3" PVC	MAIN TANK FILL FROM FILL SHUTOFF VALVE TO TANK	2000	
05	3" PVC	MAIN TANK OVERFLOW	3500	
06	2" S	RINSE TANK TO PUMP SUPPLY CONTROL VALVE	970	
07	2" S	MAIN TANK TO PUMP SUPPLY CONTROL VALVE	390	
08	2" S	SUCTION FILTER TO SPRAY PUMP	N/A	
09	1 1/4" P	FILL RINSE MANIFOLD TO RINSE LINE TEE	100	
10	1 1/2"P	SPRAY CONTROL VALVE TO FLOW METER	5300	
11	1 1/2" PVC	RINSE TANK OVERFLOW TO GROUND	1000	
12	1 1/2" P	SPRAY PUMP TO PRESSURE FILTER	1000	
13	1 1/2" PVC	HOPPER OUTLET TO MAIN TANK	6500	
14	1" P	PRESSURE FILTER DRAIN TO MAIN TANK	2200	
15	1 1/4" P	PRESSURE RELIEF VALVE TO MAIN TANK (GA7500074 ONLY)	N/A	
16	8mm NYLON	CENTRIFUGAL PUMP PRESSURE RELIEF VALVE TO TANK	6000	
17	1-1/4" P	HOPPER/BYPASS VALVE TO MAIN TANK AGITATOR	2100	
18	1/2" P	AGITATOR FLIP VALVE TO AGITATOR JET	2200	
19	3/4" P	PRESSURE RINSE MANIFOLD TEE TO TANK RINSE NOZZLE A	4000	
20	3/4" P	TANK RINSE NOZZLE A TO TANK RINSE NOZZLE B	850	
21	3" PVC	FRONT FILL 3"BALL VALVE TO MAIN TANK (WHERE FITTED)	4500	
22	1" P	CHEM PUMP 3 WAY BALL VALVE TO MAIN TANK	4000	
23	1" P	CHEM PUMP 3 WAY BALL VALVE TO HOPPER (WHERE FITTED)	2900	
24	1" P	CHEM PUMP TO 3 WAY BALL VALVE (WHERE FITTED)	240	
25	1" S	CHEM BALL VALVE TO CHEM PUMP (WHERE FITTED)	260	
26	1/2" P	FILL ASSEMBLY TO HOPPER DRUM RINSE TEE	3000	
27	1/2" P	HOPPER DRUM RINSE TEE TO HOPPER RINSE VALVE - LID	850	
28	1/2" P	HOPPER PRESSURE TEE TO HOPPER MIXING JET BALL VALVE	3500	
29	1" P	HOPPER PRESSURE TEE TO HOPPER BOTOM VENTURI PORT	3500	
30	-			
31	1 1/2" P	PRESSURE FILTER TO PRESSURE MANIFOLD	1000	
32	1" P	PRESSURE MANIFOLD TO PRESSURE RINSE MANIFOLD	165	
33	3/4" P	FILL RINSE FLIP VALVE TO PRESSURE RINSE MANIFOLD TEE	105	
34	1 1/4" P	FILL ASSEMBLY TO FILL RINSE MANIFOLD	400	
35	3/4" P	FILL RINSE MANIFOLD TO MICROMATIC RINSE SOCKET (WHERE FITTED)	500	
36	1/2" P	RINSE LINE TEE TO WASH DOWN GUN FILTER	320	
37	1/2" P	WASH DOWN GUN FILTER TO WASHDOWN GUN PUMP	80	
38	1/2" P	WASHDOWN GUN PUMP TO WASHDOWN GUN	3700	
39	1 1/4" P	RINSE LINE TEE TO RINSE TANK	3100	
40	1 1/2" P	FLOW METER TO BOOM FLOW DISTRIBUTOR	1100	
41	1" P	BOOM FLOW DISTRIBUTOR TO BOOM POLY CENTRE	0	
42	1" P	BOOM FLOW DISTRIBUTOR TO LEFT BOOM POLY END		*** BOOM LENGTH DEPENDENT
43	1" P	BOOM FLOW DISTRIBUTOR TO RIGHT BOOM POLY END		*** BOOM LENGTH DEPENDENT
44	6MM NYLON	BOOM RECIRCULATION VALVE TO PRESSURE GAUGE	10000	*** BOOM LENGTH DEPENDENT
45	6MM NYLON	PRESSURE GAUGE TO DRAIN VALVE	5000	
46	1" P	BOOM RECIRC VALVE TO MAIN TANK	5500	

GA7500073 GOLDACRES	PLUMBING SCHEMATIC, WEEDETECT WITH HAWKEYE 2nd GENERATION PWM, G4 S2, MY24	REV 00

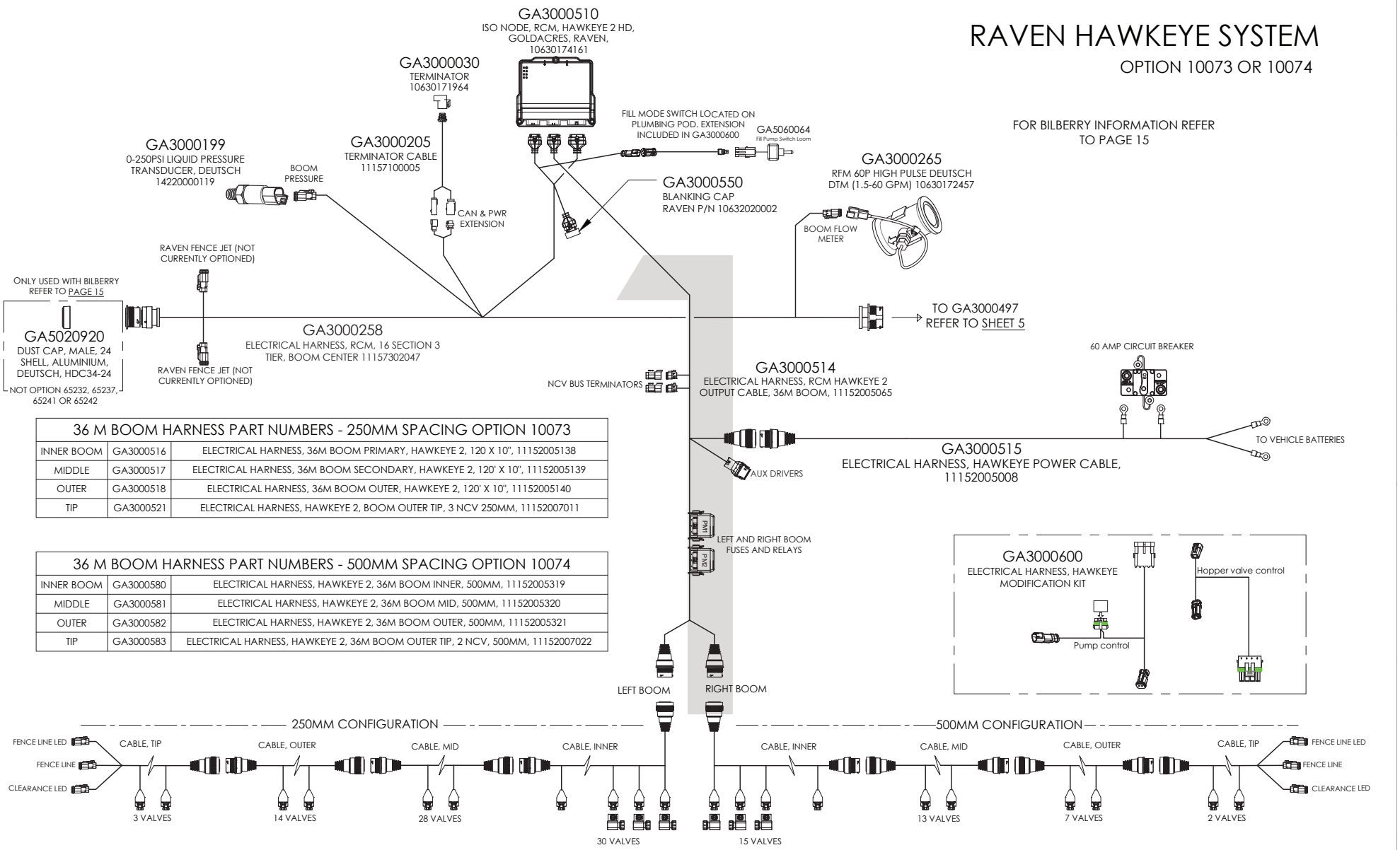

36 M BOOM HARNESS PART NUMBERS - 250MM SPACING OPTION 10073		
INNER BOOM	GA3000516	ELECTRICAL HARNESS, 36M BOOM PRIMARY, HAWKEYE 2, 120 X 10", 11152005138
MIDDLE	GA3000517	ELECTRICAL HARNESS, 36M BOOM SECONDARY, HAWKEYE 2, 120' X 10", 11152005139
OUTER	GA3000518	ELECTRICAL HARNESS, 36M BOOM OUTER, HAWKEYE 2, 120' X 10", 11152005140
TIP	GA3000521	ELECTRICAL HARNESS, HAWKEYE 2, BOOM OUTER TIP, 3 NCV 250MM, 11152007011

36 M BOOM HARNESS PART NUMBERS - 500MM SPACING OPTION 10074		
INNER BOOM	GA3000580	ELECTRICAL HARNESS, HAWKEYE 2, 36M BOOM INNER, 500MM, 11152005319
MIDDLE	GA3000581	ELECTRICAL HARNESS, HAWKEYE 2, 36M BOOM MID, 500MM, 11152005320
OUTER	GA3000582	ELECTRICAL HARNESS, HAWKEYE 2, 36M BOOM OUTER, 500MM, 11152005321
TIP	GA3000583	ELECTRICAL HARNESS, HAWKEYE 2, 36M BOOM OUTER TIP, 2 NCV, 500MM, 11152007022

Electrical Schematic, Raven RCM System

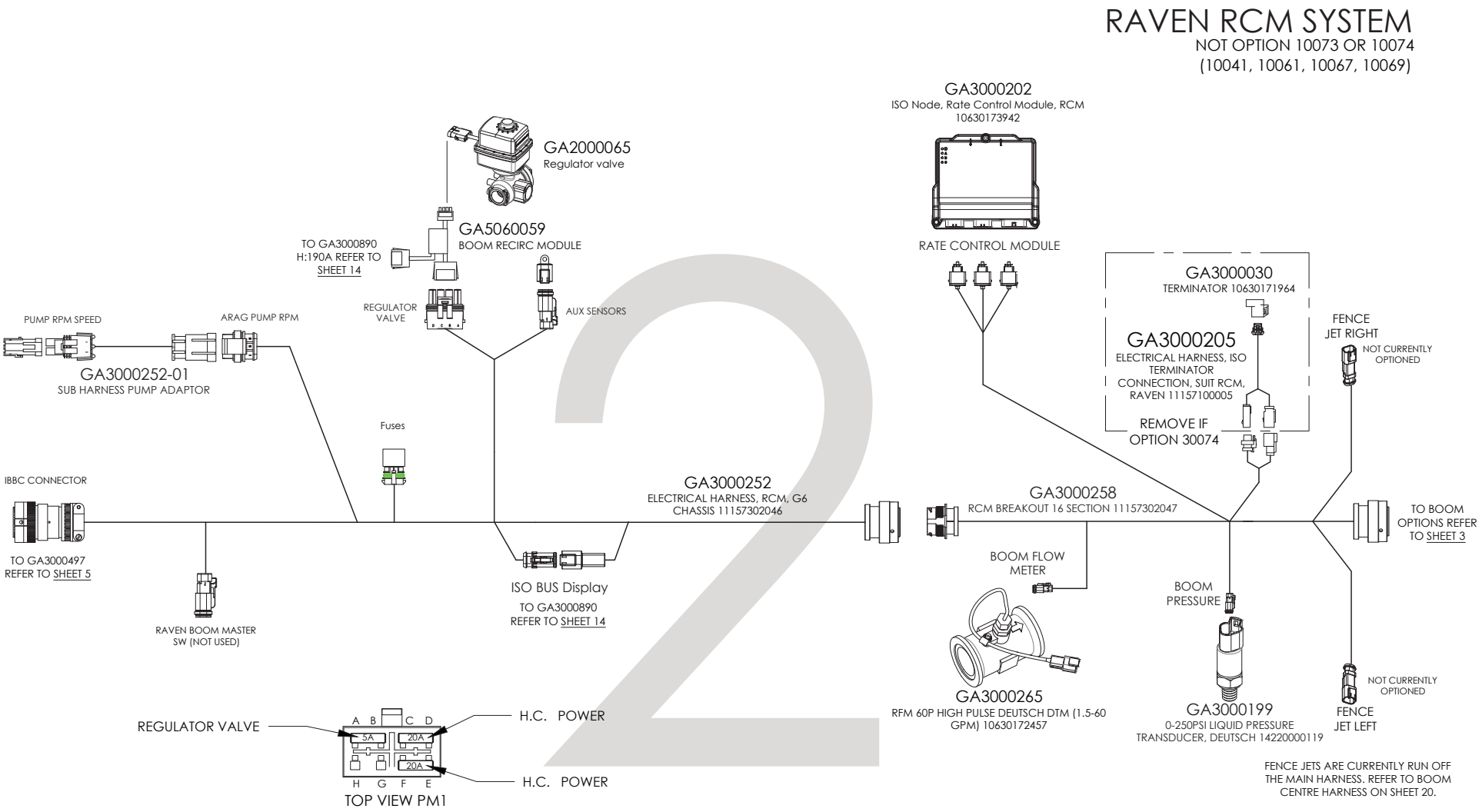

DRG NO:	TITLE:	REV:
GA7500094	G4 ELECTRICAL LAYOUT MY24	01

Electrical Schematic, Boom Options

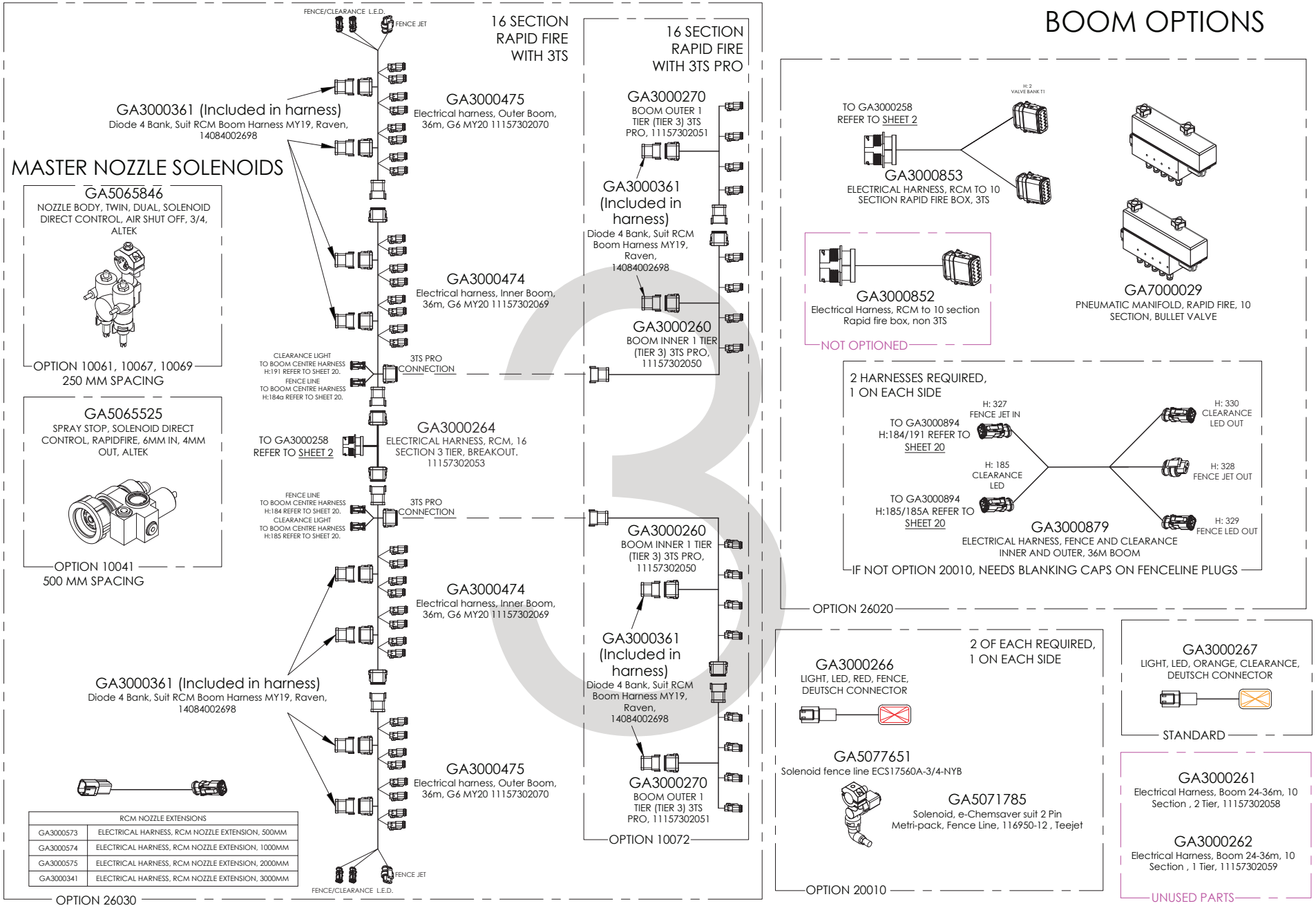

DRG NO:	TITLE:	REV:
GA7500094	G4 ELECTRICAL LAYOUT MY24	01

Electrical Schematic, Raven XRT Boom Leveling

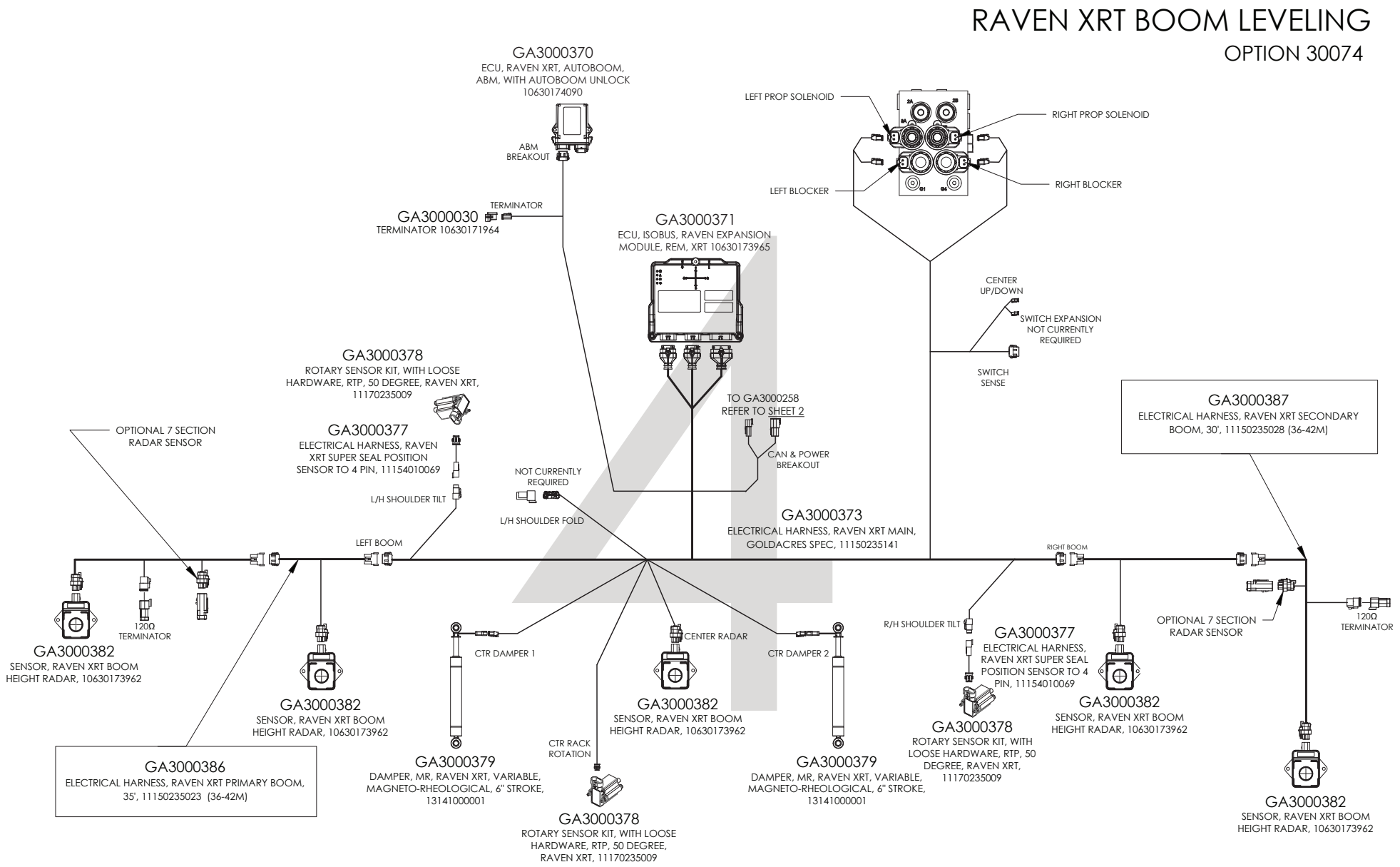

DRG NO:	TITLE:	REV:
GA7500094	G4 ELECTRICAL LAYOUT MY24	01

Electrical Schematic, Autosteer

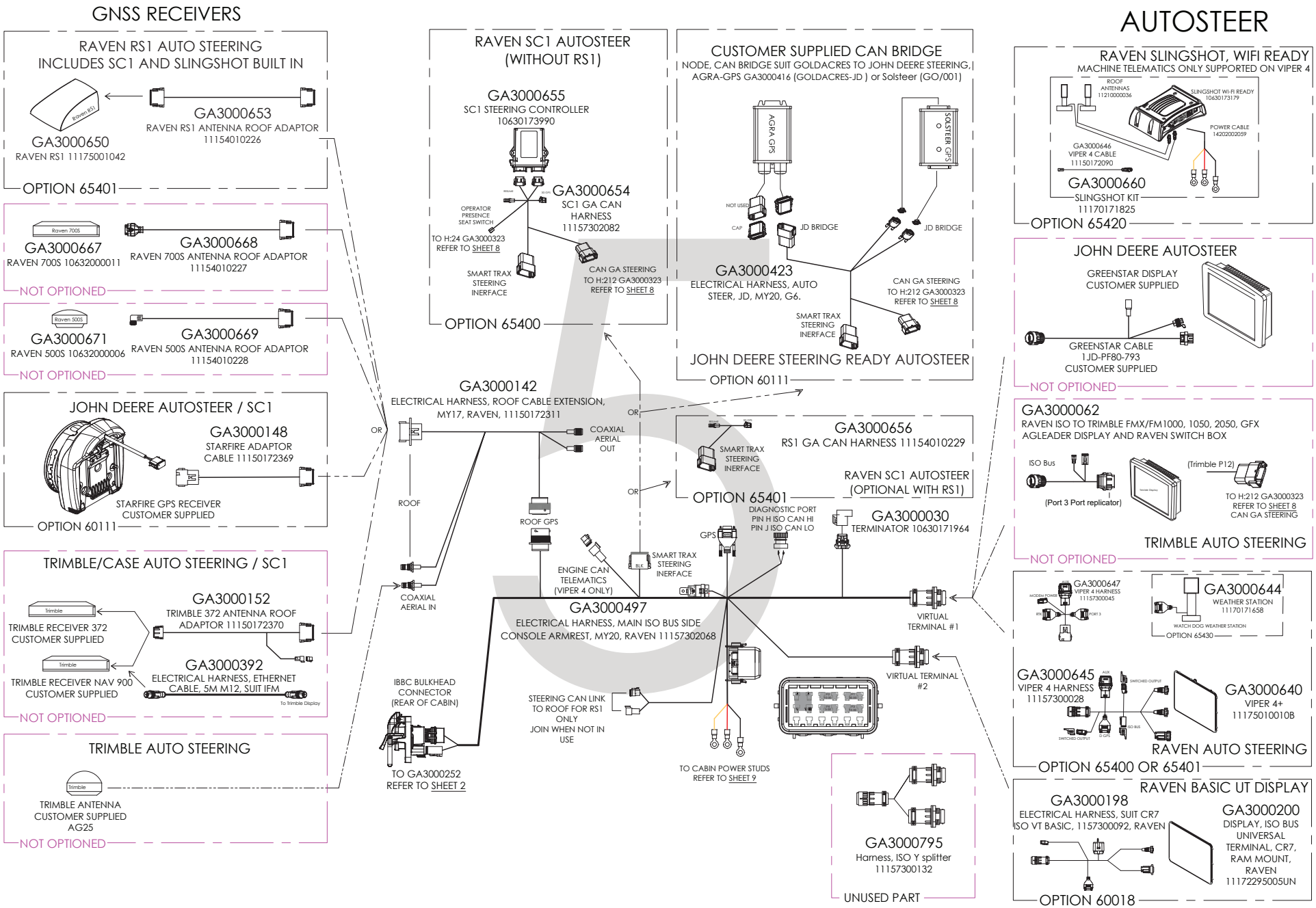

DRG NO:	TITLE:	REV:
GA7500094	G4 ELECTRICAL LAYOUT MY24	01

Electrical Schematic, Claas Cabin

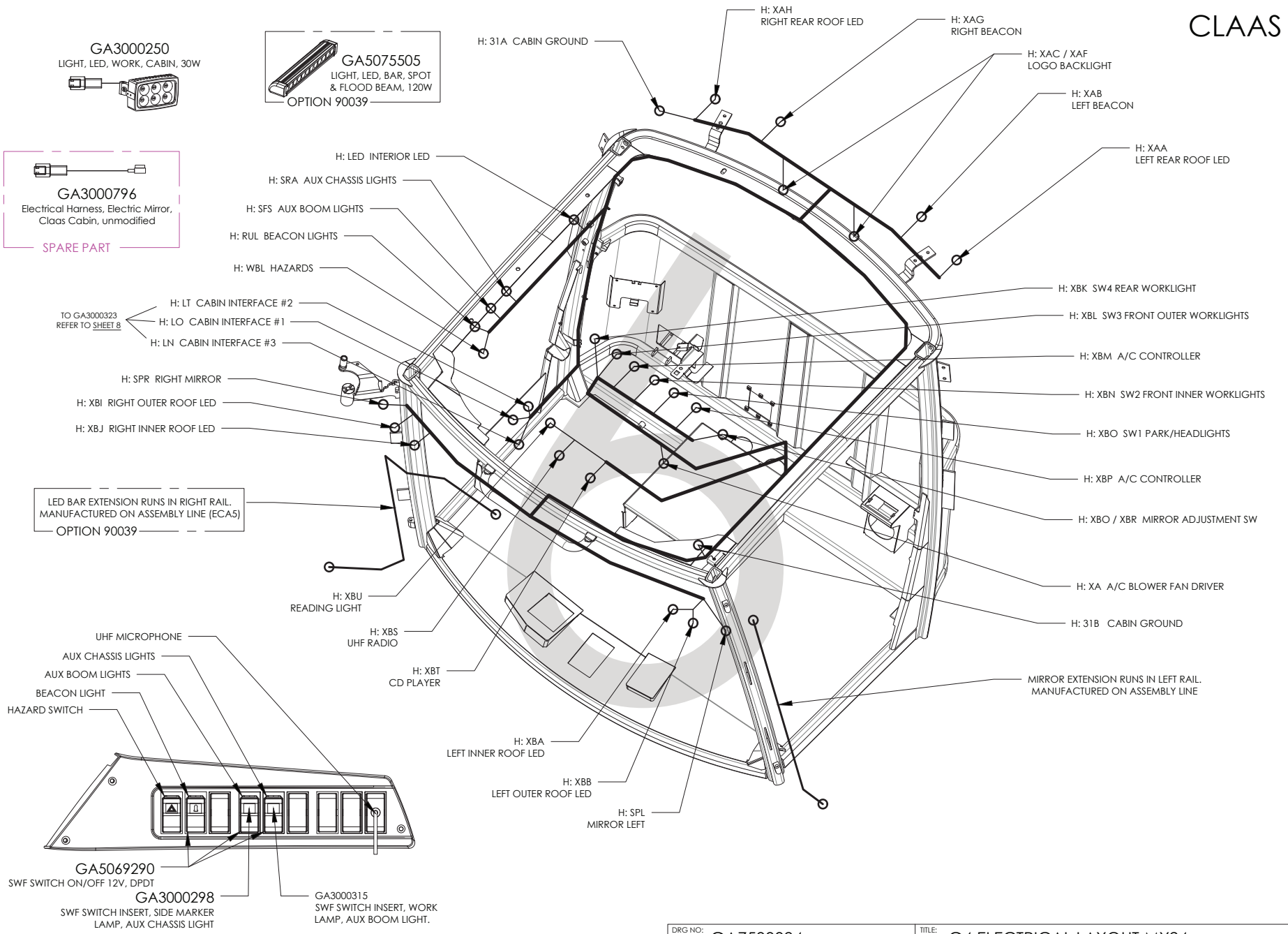

DRG NO:	TITLE:	REV:
GA7500094	G4 ELECTRICAL LAYOUT MY24	01

Electrical Schematic, Claas Cabin (Pin Outs)

CLAAS ELECTRICAL

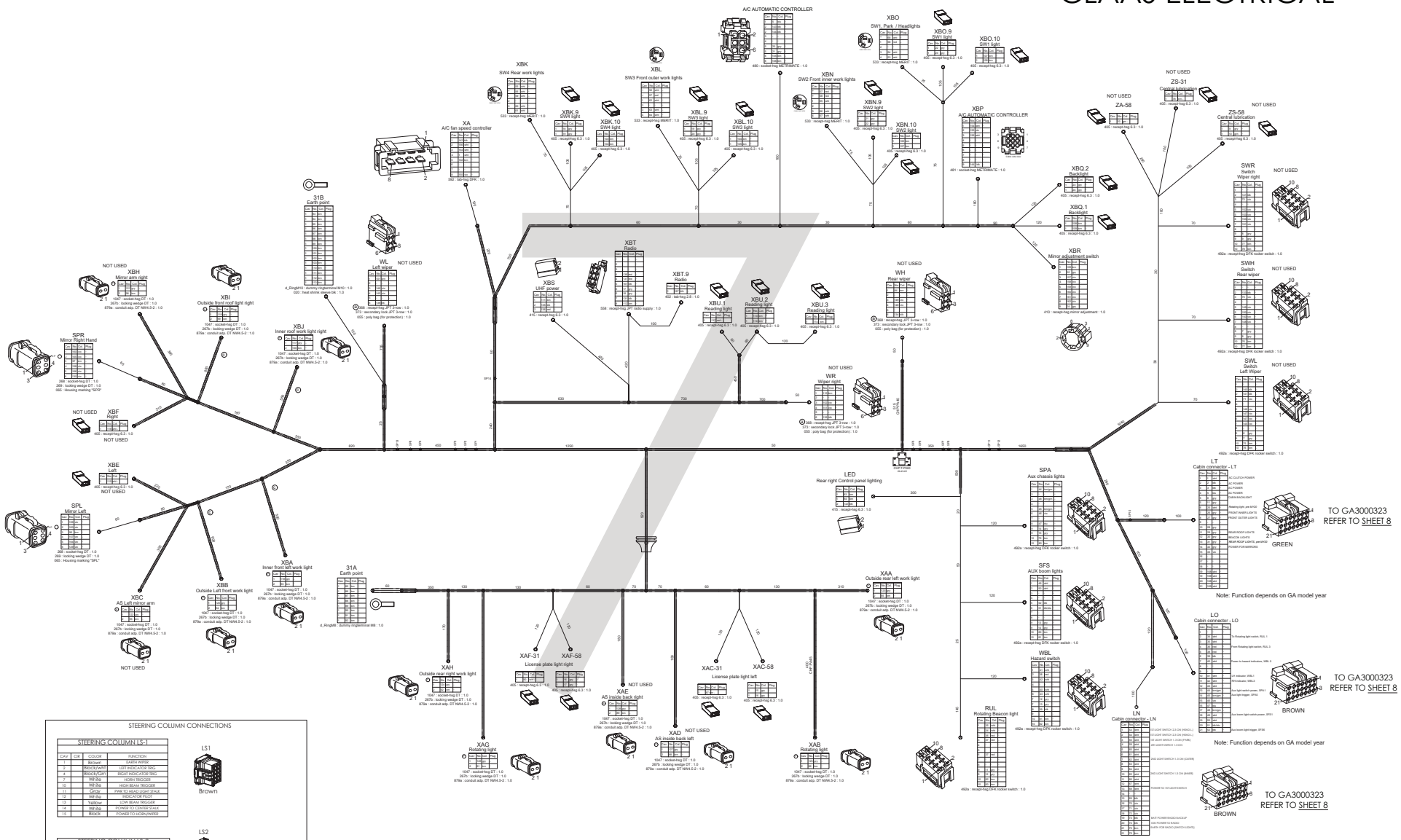

DRG NO:	TITLE:	REV:
GA7500094	G4 ELECTRICAL LAYOUT MY24	01

Electrical Schematic, Claas Cabin Harness, Main

GA3000323

Electrical Harness, Main Cabin, G6 MY20.

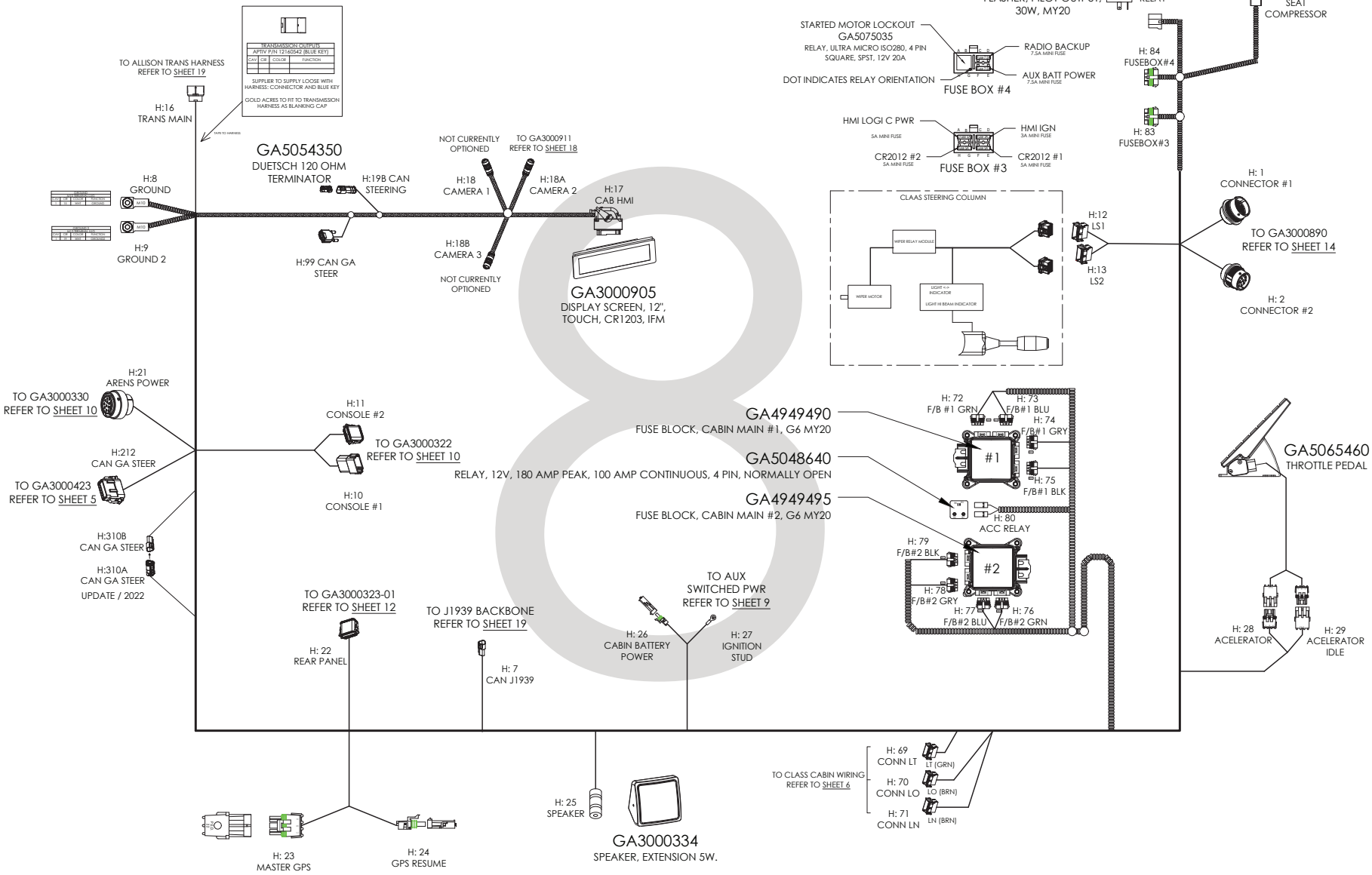

DRG NO:	TITLE:	REV:
GA7500094	G4 ELECTRICAL LAYOUT MY24	01

Electrical Schematic, Cabin Fuse Box

CABLE LIST

CABLE#	LENGTH	COLOR	END A	END B	DESCRIPTION
1	3470	RED	8mm	8mm	CABIN POWER
2	330	RED	8mm	6mm	ACCESSORY POWER
3	225	RED	8mm	6mm	ACCESSORY POWER
4	2710	RED	8mm	8mm	3RD PARTY MAIN POWER
5	800	BLK	8mm	10mm	3RD PART EARTH
6A	-	-	-	-	CABLE GLAND M25 O.D.
6B	-	-	-	-	CABLE GLAND M25 O.D.

GA3000326
ELECTRICAL HARNESS, CABIN POWER KIT, G6 MY20

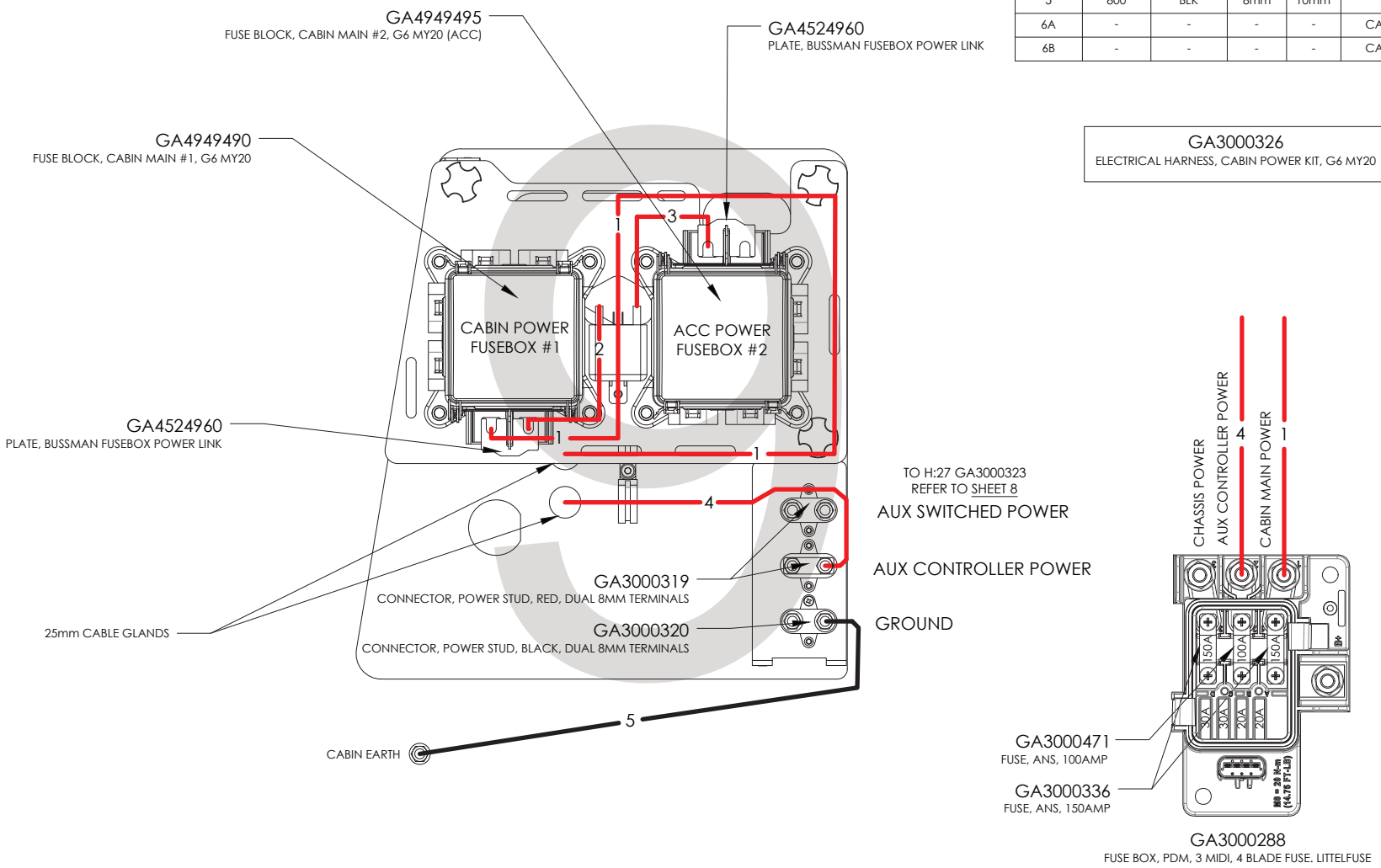

DRG NO:	TITLE:	REV:
GA7500094	G4 ELECTRICAL LAYOUT MY24	01

Electrical Schematic, Side Console Harness

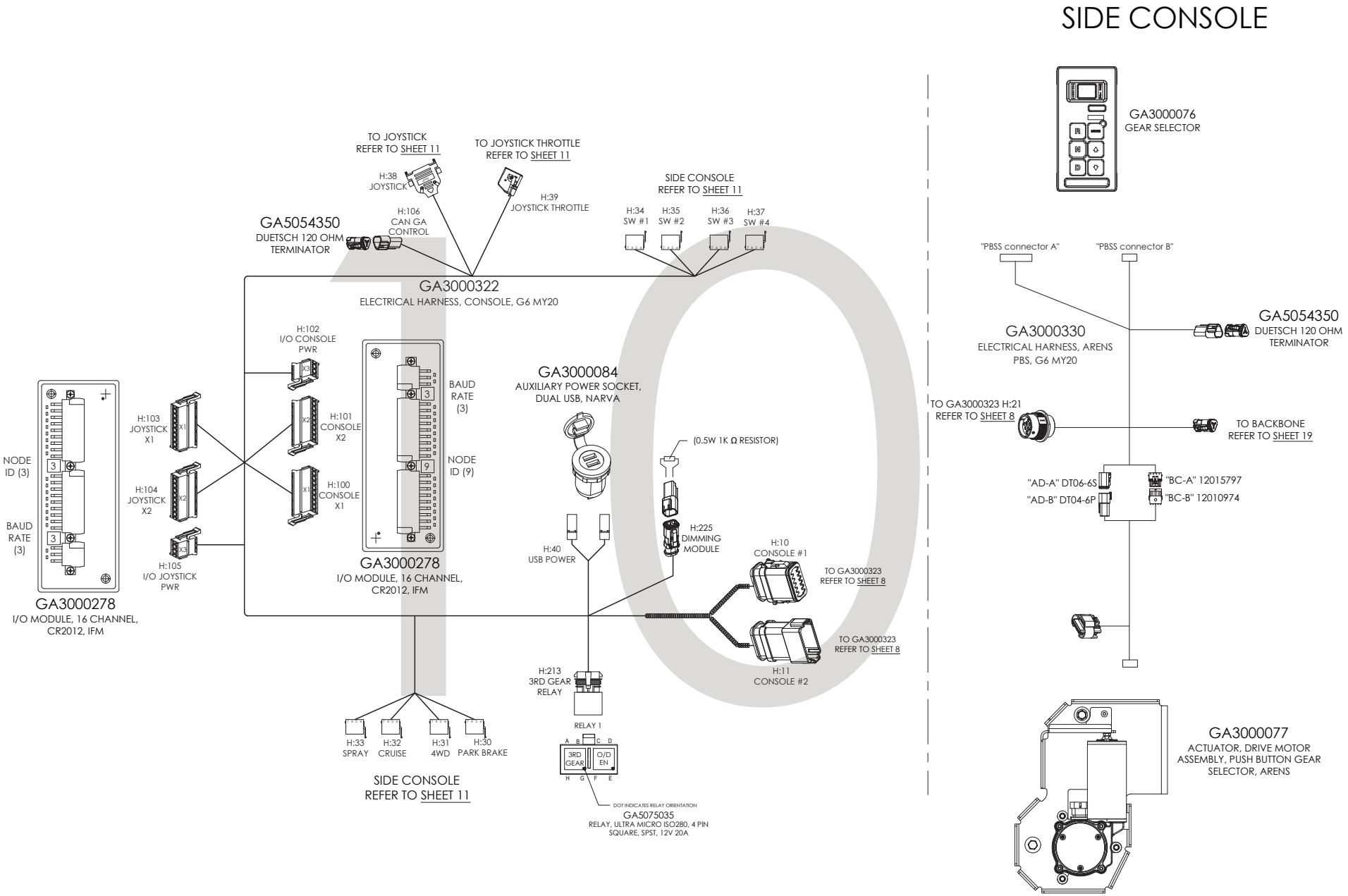

DRG NO:	TITLE:	REV:
GA7500094	G4 ELECTRICAL LAYOUT MY24	01

Electrical Schematic, Side Console Operations

SIDE CONSOLE

SPRAY PUMP / TANK SELECTION

BOOM RECIRC

RPM RAISE

GA3000076
PUSH BUTTON GEAR SELECTOR CONTROLLER, PROGRAMMED, ARENS SBW-PB2-687

GA5020825
RAM MOUNT, UNIVERSAL, ADJUSTABLE, C SIZE 1.5" BALL, 7.35", RAM-101U

GA3000905
DISPLAY SCREEN, 12", TOUCH, IFM CR1203

SPRAY ROAD MODE (POWER TO STEERING)
GA3000344 SWITCH BODY, ON/ON, 2P2T, BLUE LED, CARLING
GA3000353 SWITCH ACTUATOR, SPRAY, LASER ETCHED, G6 MY20

CRUISE MASTER
GA3000343 SWITCH BODY, MOM/OFF/, 2P2T, BLUE LED, CARLING
GA3000354 SWITCH ACTUATOR, CRUISE, LASER ETCHED, G6 MY20

REAR DIFF LOCK / 4WD (NOT OPTION 40077)
GA3000342 SWITCH BODY, MOM/OFF/MOM, 2P2T, BLUE LED, CARLING
GA3000887 Switch Actuator, 4WD / Diff lock Laser Etched, G4 MY24

PARK BRAKE
GA3000362 SWITCH CARLING, LOCKING, PARK BRAKE, CONTURA V, G6 MY20

BOOM REST
GA3000342 SWITCH BODY, MOM/OFF/MOM, 2P2T, BLUE LED, CARLING
GA3000352 SWITCH ACTUATOR, LASER ETCHED, G6 MY20

BOOM FOLD
GA3000342 SWITCH BODY, MOM/OFF/MOM, 2P2T, BLUE LED, CARLING
GA3000349 SWITCH ACTUATOR, LASER ETCHED, G6 MY20

BOOM BI FOLD (OPTION 30080)
GA3000342 SWITCH BODY, MOM/OFF/MOM, 2P2T, BLUE LED, CARLING
GA3000350 SWITCH ACTUATOR, LASER ETCHED, G6 MY20

ADJ AXLE (OPTION 40077)
GA3000342 SWITCH BODY, MOM/OFF/MOM, 2P2T, BLUE LED, CARLING
GA3000886 Switch Actuator, ADJ axle Laser Etched, G4 MY24

T7a CRUISE CANCEL
T3a CRUISE RESUME INCREASE
T3b CRUISE SET DECREASE
T1a Dual TILT UP
T1b Dual TILT Down
25PIN printer Pins
Claas Joystick

T5b TILT R UP
T5a TILT R DOWN
T5d TILT L UP
T4a BOOM LIFT
T8a GPS auto steer MOMENTARY SWITCH
T5c TILT L DOWN
T6a BOOM SECTION MASTER
T4c LEFT FENCE SWITCH
T4d BOOM LOWER
T4b RIGHT FENCE SWITCH
Claas Joystick

GA3000071
JOYSTICK, MULTI FUNCTION, ERGONOMIC, CLAAS

GA3000107 Throttle Control, Joystick Base, Claas

DRG NO:	TITLE:	REV:
GA7500094	G4 ELECTRICAL LAYOUT MY24	01

Electrical Harness, Ignition Harness

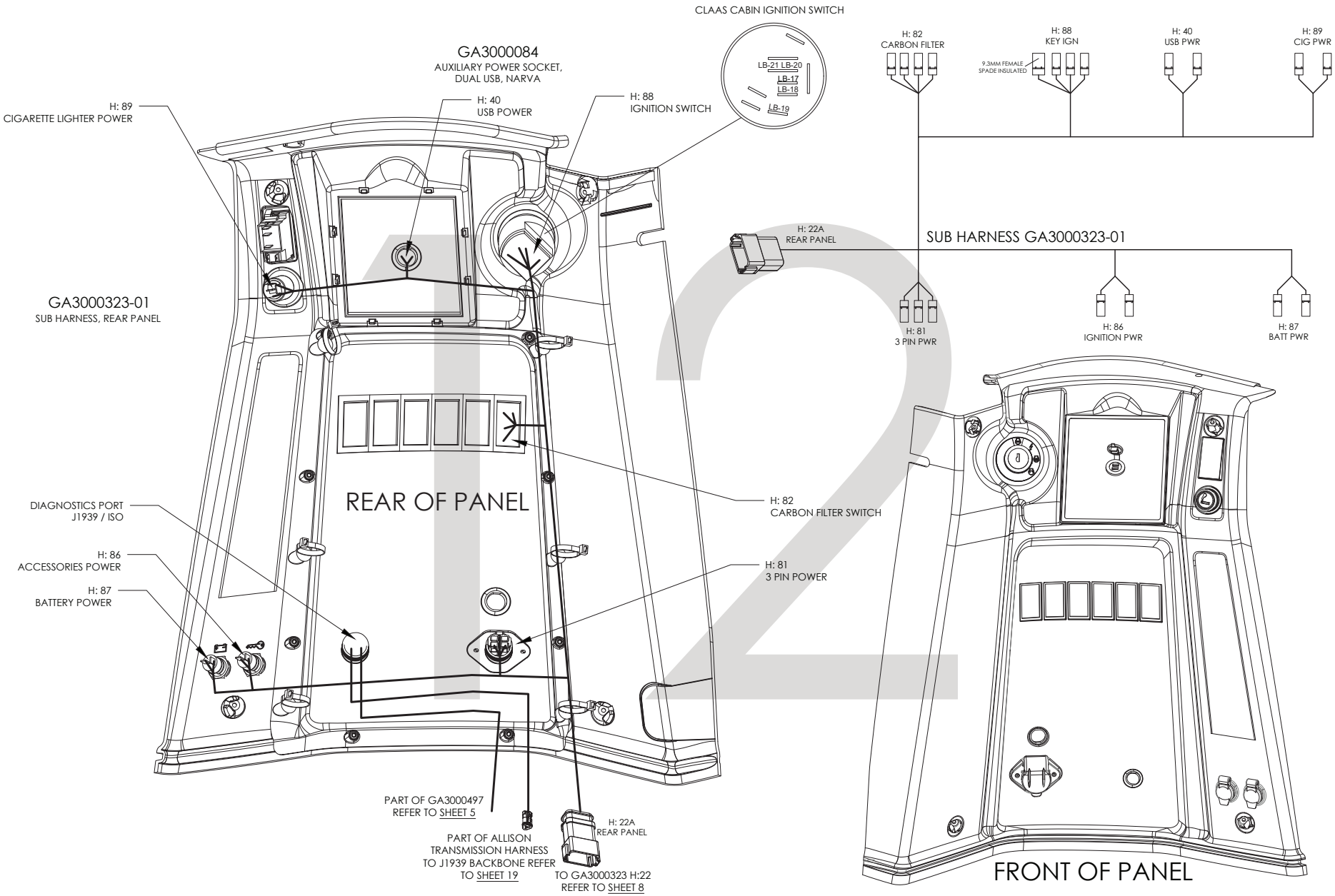

DRG NO:	TITLE:	REV:
GA7500094	G4 ELECTRICAL LAYOUT MY24	01

Electrical Schematic, Battery Kit Harness

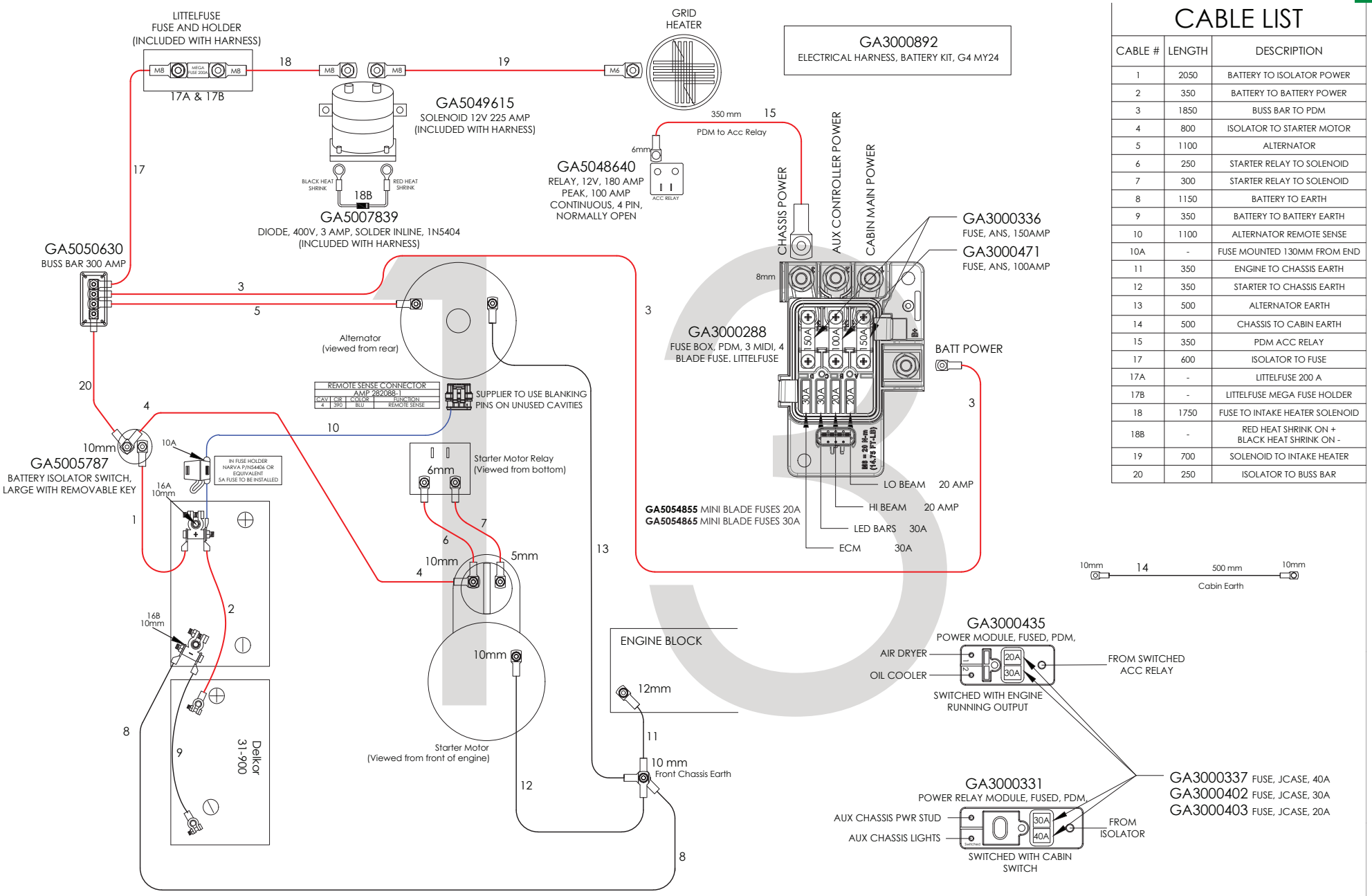

CABLE LIST

CABLE #	LENGTH	DESCRIPTION
1	2050	BATTERY TO ISOLATOR POWER
2	350	BATTERY TO BATTERY POWER
3	1850	BUSS BAR TO PDM
4	800	ISOLATOR TO STARTER MOTOR
5	1100	ALTERNATOR
6	250	STARTER RELAY TO SOLENOID
7	300	STARTER RELAY TO SOLENOID
8	1150	BATTERY TO EARTH
9	350	BATTERY TO BATTERY EARTH
10	1100	ALTERNATOR REMOTE SENSE
10A	-	FUSE MOUNTED 130MM FROM END
11	350	ENGINE TO CHASSIS EARTH
12	350	STARTER TO CHASSIS EARTH
13	500	ALTERNATOR EARTH
14	500	CHASSIS TO CABIN EARTH
15	350	PDM ACC RELAY
17	600	ISOLATOR TO FUSE
17A	-	LITTELFUSE 200 A
17B	-	LITTELFUSE MEGA FUSE HOLDER
18	1750	FUSE TO INTAKE HEATER SOLENOID
18B	-	RED HEAT SHRINK ON + BLACK HEAT SHRINK ON -
19	700	SOLENOID TO INTAKE HEATER
20	250	ISOLATOR TO BUSS BAR

DRG NO:	TITLE:	REV:
GA7500094	G4 ELECTRICAL LAYOUT MY24	01

Electrical Schematic, Main Chassis

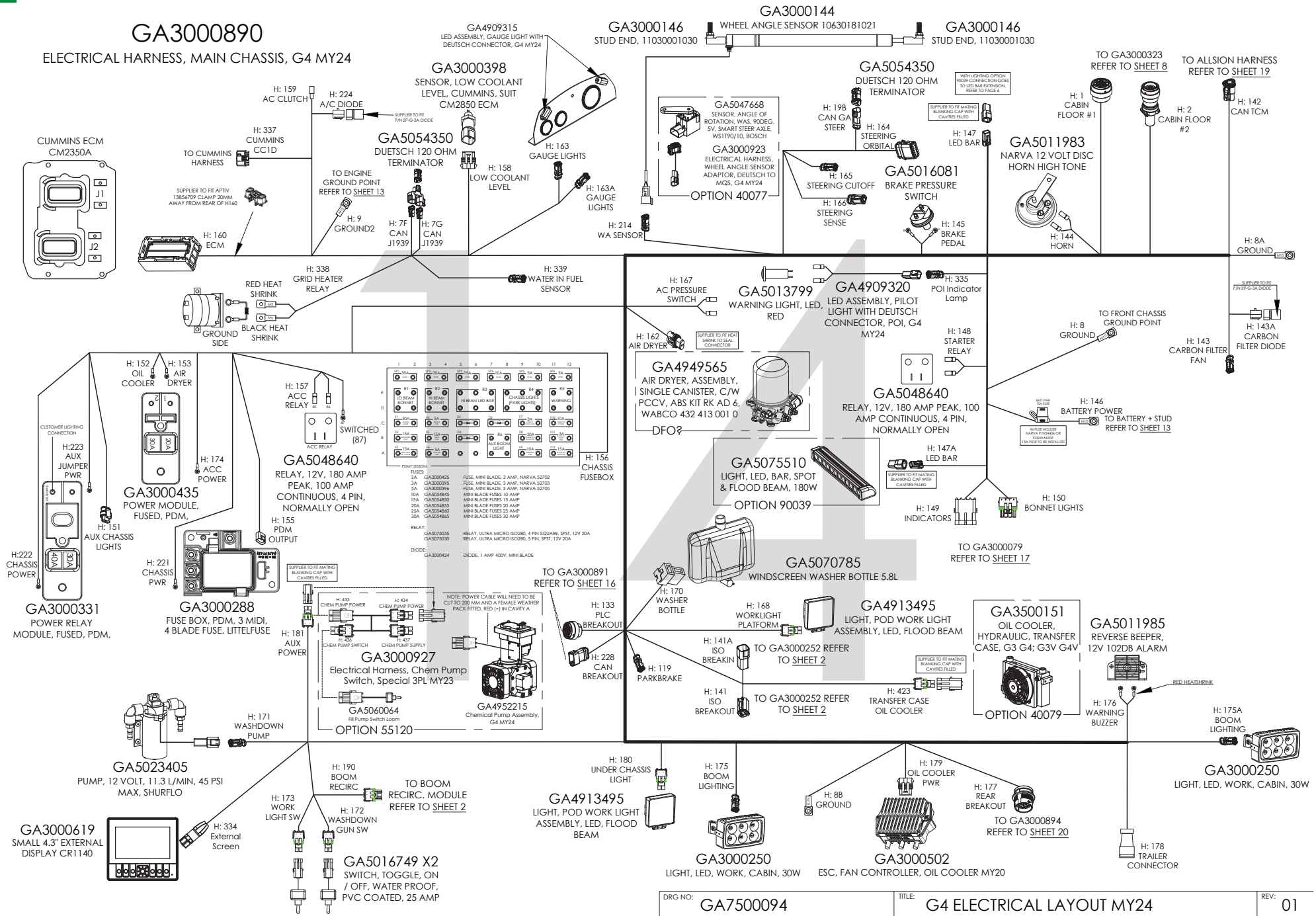

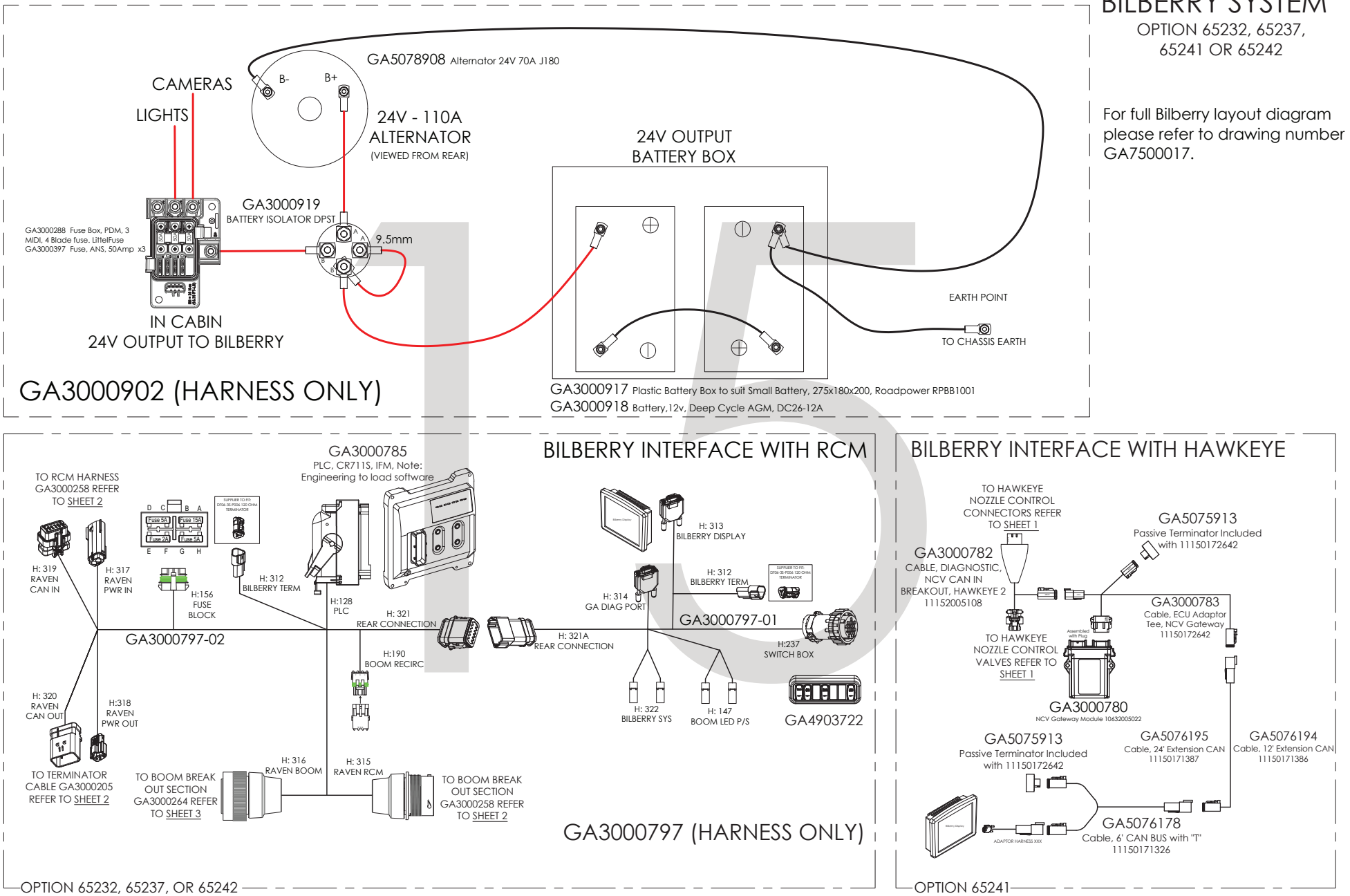

DRG NO:	TITLE:	REV:
GA7500094	G4 ELECTRICAL LAYOUT MY24	01

Electrical Schematic, Bilberry, RCM Based System

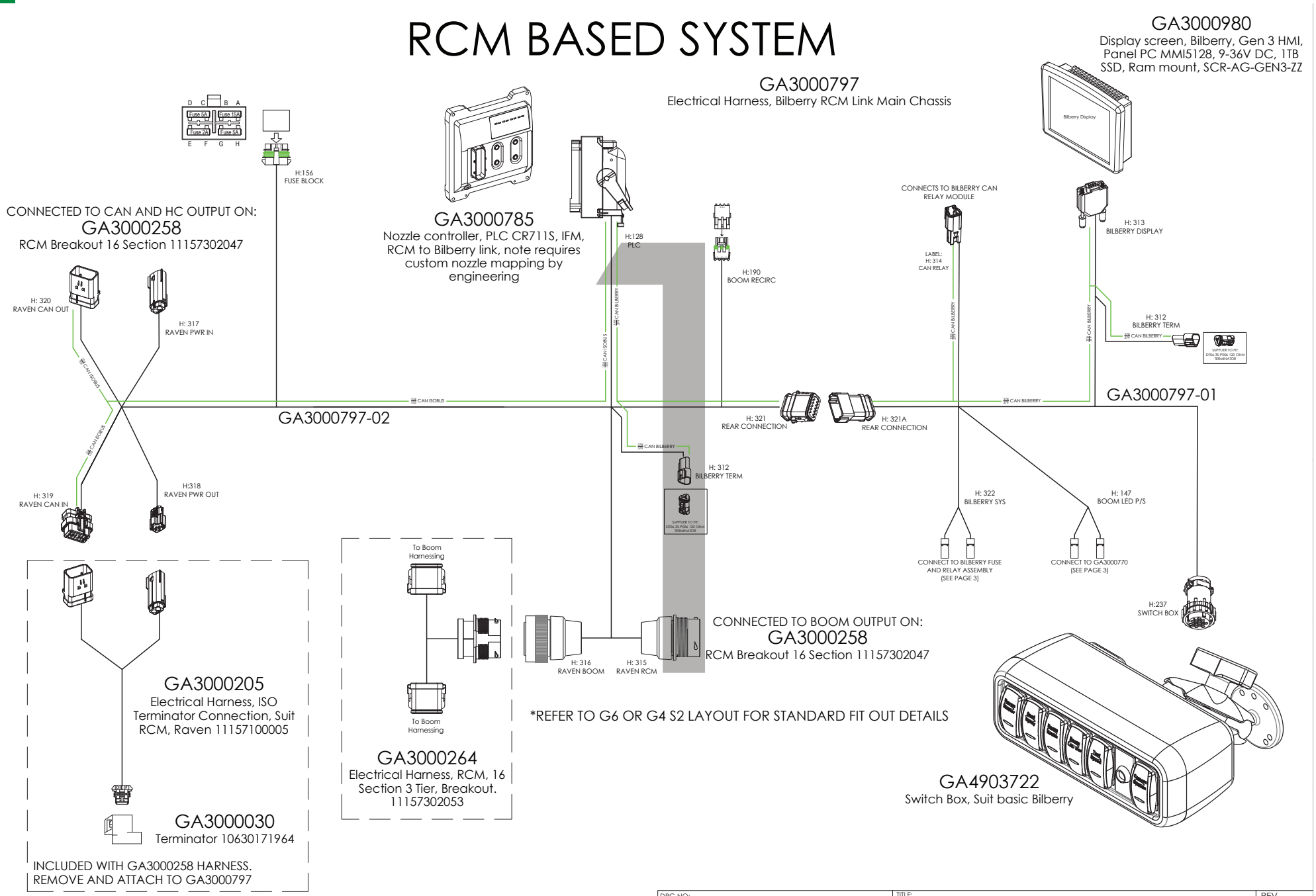

DRG NO:	TITLE:	REV
GA7500075	BILBERRY ELECTRICAL LAYOUT MY25	01

Electrical Schematic, Bilberry, Hawkeye System

GA3000741 - Display CAN / GPS to 2P Deutsch, Bilberry, COR-AG-CTRL-0250

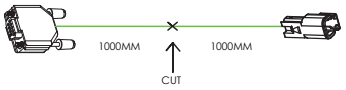

GA3000741-01 - ADAPTOR HARNESS MODIFIED BILBBERY DISPLAY TO CAN NETWORK

BILBERRY DISPLAY			
AMP P/N 205203-3 TE P/N 66504-9 (GOLD PLATED) TE P/N 2198617-9			
CAV	CIR	COLOR	FUNCTION
2	379	GRN	CAN_L LO BILBERRY
7	378	YEL	CAN_H HI BILBERRY

TO CAN TEE DEUTSCH DT04-4P			
CAV	CIR	COLOUR	FUNCTION
1			-
2	378	YEL	CAN_H HI BILBERRY
3			-
4	379	GRN	CAN_L LO BILBERRY

½ X GA3000741 Electrical harness, Display CAN / GPS
1X GA5013783 Receptacle, 4 way, pins, DT series Deutsch
1X GA5050765 Wedge Lock, Green, 4 Way pins, Deutsch
2X GA5061240 Pin, Male, solid, nickel, Number 16, Green band
2X GA5052840 Sealing plug, blanking pin, White

GA3000741-02 - ADAPTOR HARNESS MODIFIED BILBBERY CAN RELAY TO CAN NETWORK

TO CAN TEE DEUTSCH DT04-4P			
CAV	CIR	COLOUR	FUNCTION
1			-
2	378	YEL	CAN_H HI BILBERRY
3			-
4	379	GRN	CAN_L LO BILBERRY

BILBERRY CAN RELAY			
DEUTSCH DTM04-2P			
CAV	CIR	COLOR	FUNCTION
2	379	GRN	CAN_L LO BILBERRY
1	378	YEL	CAN_H HI BILBERRY

½ X GA3000741 Electrical harness, Display CAN / GPS
1X GA5013783 Receptacle, 4 way, pins, DT series Deutsch
1X GA5050765 Wedge Lock, Green, 4 Way pins, Deutsch
2X GA5061240 Pin, Male, solid, nickel, Number 16, Green band
2X GA5052840 Sealing plug, blanking pin, White

RAVEN HAWKEYE SYSTEM WITH BILBERRY

*REFER TO G6 OR G4 S2 LAYOUT FOR STANDARD FIT OUT DETAILS

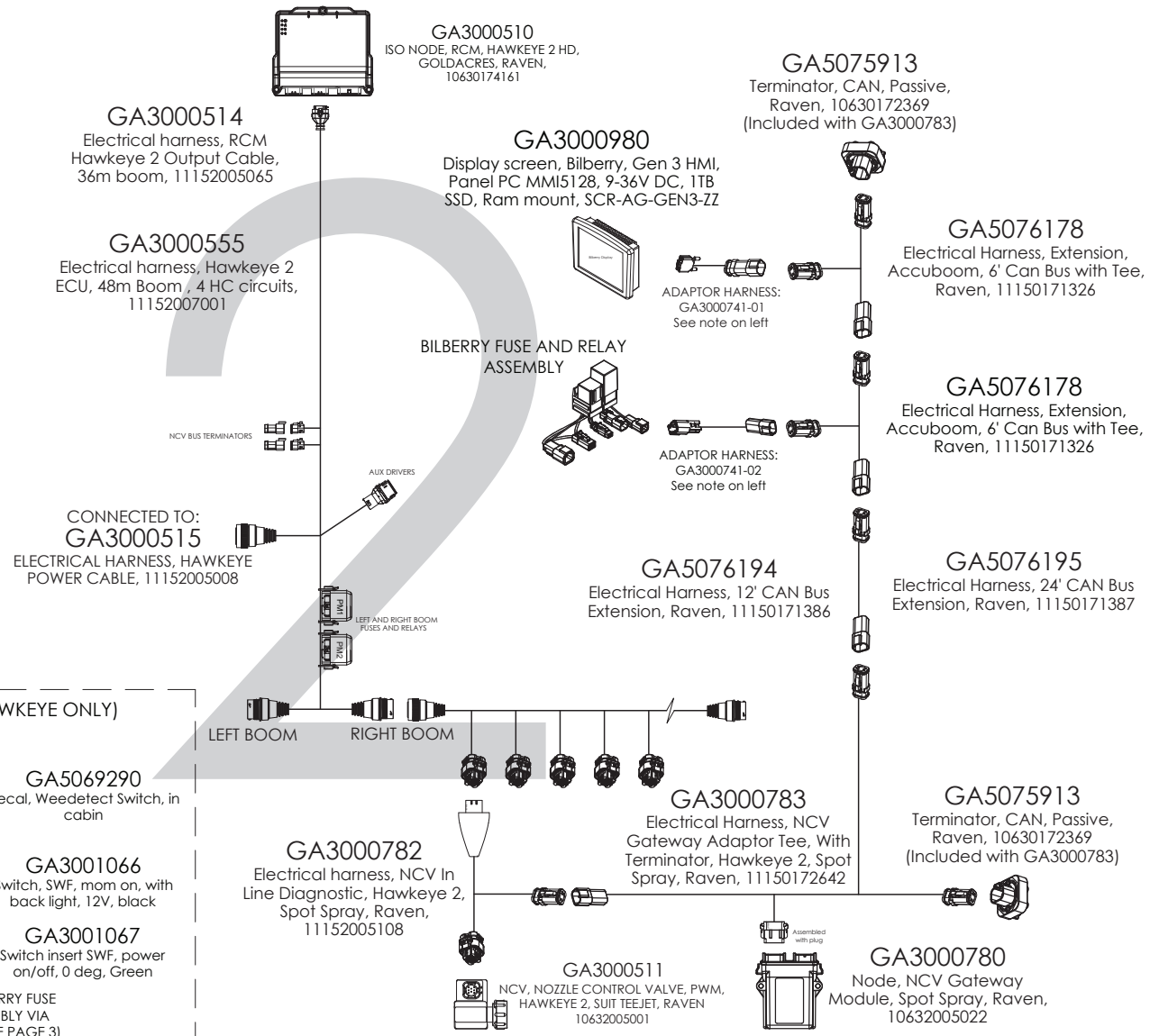

Main System Switches to be Fitted into the Cabin (HAWKEYE ONLY)

GA8701700
Decal, Weedetect Boom Lights Switch, in cabin

GA5069290
Decal, Weedetect Switch, in cabin

GA5069290
SWF Switch ON/OFF 12v, DPDT

GA3000315
SWF Switch Insert, WORK LAMP, Aux Boom Light.

CONNECT TO GA3000770 VIA CAVITY 5 AND 1 (SEE PAGE 9)

GA3001066
Switch, SWF, mom on, with back light, 12V, black

GA3001067
Switch insert SWF, power on/off, 0 deg, Green

CONNECT TO BILBERRY FUSE AND RELAY ASSEMBLY VIA CAVITY 5 AND 1 (SEE PAGE 3)

DRG NO:	TITLE:	REV:
GA7500075	BILBERRY ELECTRICAL LAYOUT MY25	01

Electrical Schematic, Bilberry, Connection Layout, 36m

BILBERRY GEN 3 SYSTEM - 36M

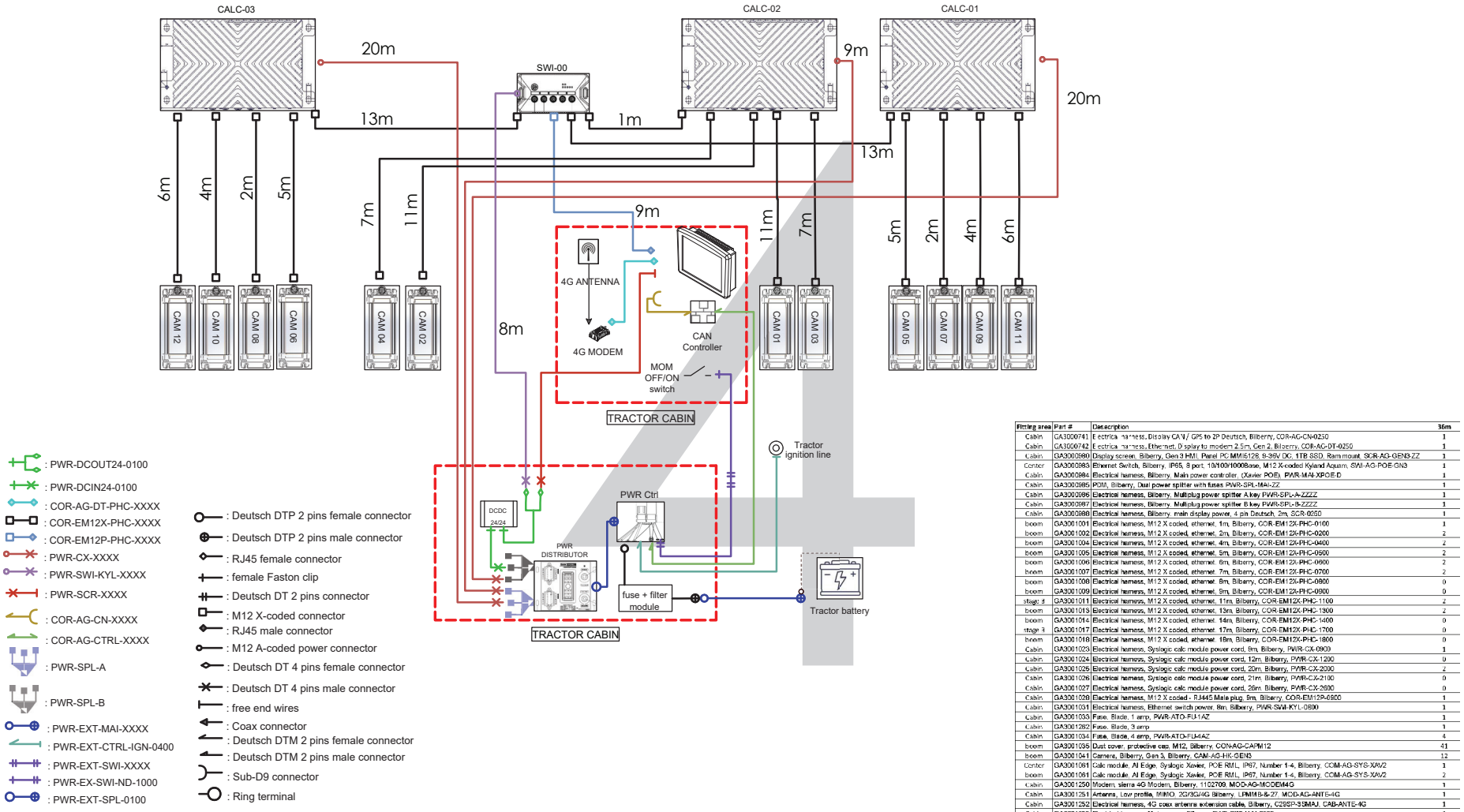

Fitting area	Part #	Description	36m
Cabin	GA3000741	Electrical harness, Display CAN / GPS to 2P Deutsch, Bilberry, COR-AG-CN-0250	1
Cabin	GA3000742	Electrical harness, Ethernet, Display to modem 2.5m, Gen 2, Bilberry, COR-AG-DT-0250	1
Cabin	GA3000980	Display screen, Bilberry, Gen 3 HMI, Panel PC MM8128, 8-36V DC, 11B SSD, Ram mount, SCR-AG-GEN3-ZZ	1
Center	GA3000983	Ethernet Switch, Bilberry, IP65, 8 port, 10/100/1000Base, M12 X-coded Kyland Aquam, SWI-AG-POE-GN3	1
Cabin	GA3000984	Electrical harness, Bilberry, Main power controller, (Xavier POE), PWR-MAI-XPOE-D	1
Cabin	GA3000985	POM, Bilberry, Dual power splitter with fuses PWR-SPL-MAI-ZZ	1
Cabin	GA3000986	Electrical harness, Bilberry, Multiplug power splitter A key PWR-SPL-A-ZZZZ	1
Cabin	GA3000987	Electrical harness, Bilberry, Multiplug power splitter B key PWR-SPL-B-ZZZZ	1
Cabin	GA3000988	Electrical harness, Bilberry, main display power, 4 pin Deutsch, 2m, SCR-0250	1
boom	GA3001001	Electrical harness, M12 X coded, ethernet, 1m, Bilberry, COR-EM12X-PHC-0100	1
boom	GA3001002	Electrical harness, M12 X coded, ethernet, 2m, Bilberry, COR-EM12X-PHC-0200	2
boom	GA3001004	Electrical harness, M12 X coded, ethernet, 4m, Bilberry, COR-EM12X-PHC-0400	2
boom	GA3001005	Electrical harness, M12 X coded, ethernet, 5m, Bilberry, COR-EM12X-PHC-0500	2
boom	GA3001006	Electrical harness, M12 X coded, ethernet, 6m, Bilberry, COR-EM12X-PHC-0600	2
boom	GA3001007	Electrical harness, M12 X coded, ethernet, 7m, Bilberry, COR-EM12X-PHC-0700	2
boom	GA3001008	Electrical harness, M12 X coded, ethernet, 8m, Bilberry, COR-EM12X-PHC-0800	0
boom	GA3001009	Electrical harness, M12 X coded, ethernet, 9m, Bilberry, COR-EM12X-PHC-0900	0
stage 4	GA3001011	Electrical harness, M12 X coded, ethernet, 11m, Bilberry, COR-EM12X-PHC-1100	2
boom	GA3001013	Electrical harness, M12 X coded, ethernet, 13m, Bilberry, COR-EM12X-PHC-1300	2
boom	GA3001014	Electrical harness, M12 X coded, ethernet, 14m, Bilberry, COR-EM12X-PHC-1400	0
stage 3	GA3001017	Electrical harness, M12 X coded, ethernet, 17m, Bilberry, COR-EM12X-PHC-1700	0
boom	GA3001018	Electrical harness, M12 X coded, ethernet, 18m, Bilberry, COR-EM12X-PHC-1800	0
Cabin	GA3001023	Electrical harness, Syslogic calc module power cord, 8m, Bilberry, PWR-CX-0900	1
Cabin	GA3001024	Electrical harness, Syslogic calc module power cord, 12m, Bilberry, PWR-CX-1200	0
Cabin	GA3001025	Electrical harness, Syslogic calc module power cord, 20m, Bilberry, PWR-CX-2000	2
Cabin	GA3001026	Electrical harness, Syslogic calc module power cord, 21m, Bilberry, PWR-CX-2100	0
Cabin	GA3001027	Electrical harness, Syslogic calc module power cord, 26m, Bilberry, PWR-CX-2600	0
Cabin	GA3001028	Electrical harness, M12 X coded - RJ445 Male plug, 8m, Bilberry, COR-EM12P-0800	1
Cabin	GA3001031	Electrical harness, Ethernet switch power, 8m, Bilberry, PWR-SWI-KYL-0800	1
Cabin	GA3001033	Fuse, Blade, 1 amp, PWR-ATO-FU-1AZ	1
Cabin	GA3001282	Fuse, Blade, 3 amp	1
Cabin	GA3001034	Fuse, Blade, 4 amp, PWR-ATO-FU-4AZ	4
boom	GA3001035	Dust cover, protective cap, M12, Bilberry, CON-AG-CAPM12	41
boom	GA3001041	Camera, Bilberry, Gen 3, Bilberry, CAM-AG-HK-GEN3	12
Center	GA3001061	Calc module, AI Edge, Syslogic Xavier, POE RMI, IP67, Number 1-4, Bilberry, COM-AG-SYS-XAV2	1
boom	GA3001061	Calc module, AI Edge, Syslogic Xavier, POE RMI, IP67, Number 1-4, Bilberry, COM-AG-SYS-XAV2	2
Cabin	GA3001250	Modem, sierra 4G Modem, Bilberry, 1102709, MOD-AG-MODEM4G	1
Cabin	GA3001251	Antenna, Low profile, MIMO, 2G/3G/4G Bilberry, LPMIMB-8-27, MOD-AG-ANTE-4G	1
Cabin	GA3001252	Electrical harness, 4G coax antenna extension cable, Bilberry, C28SP-SMAJ, CAB-ANTE-4G	1
Cabin	GA3001253	Electrical harness, Main power, Bilberry, PWR-EXT-MAI-2000	1
Cabin	GA3001254	Electrical harness, Fuse and filter module 24V, Bilberry, PWR-FFM-24V	1
Cabin	GA3001256	DCDC converter, 24-24v Vdc, 72W, Bilberry, DDM-24-072, PWR-DC-AT-3424	1
Cabin	GA3001258	Electrical harness, DCDC input converter power cord, Bilberry, PWR-DCIN24-0100	1
Cabin	GA3001257	Electrical harness, DCDC output converter power cord, Bilberry, PWR-DCOUT24-0100	1
Cabin	GA3001258	Electrical harness, MOM switch power extender cord, PWR-EXT-SWI-1300	1
Cabin	GA3001259	Electrical harness, MOM switch power extender cord end part, PWR-EX-SWI-ND-0100	1
Cabin	GA3001260	Electrical harness, control power ignition cord, Bilberry, PWR-EX-CT-IGN-0400	1
Cabin	GA3001261	Electrical harness, power splitter input cord, Bilberry, PWR-EXT-SPL-0100	1

DRG NO:	TITLE:	REV:
GA7500075	BILBERRY ELECTRICAL LAYOUT MY25	01

Electrical Schematic, Main PLC

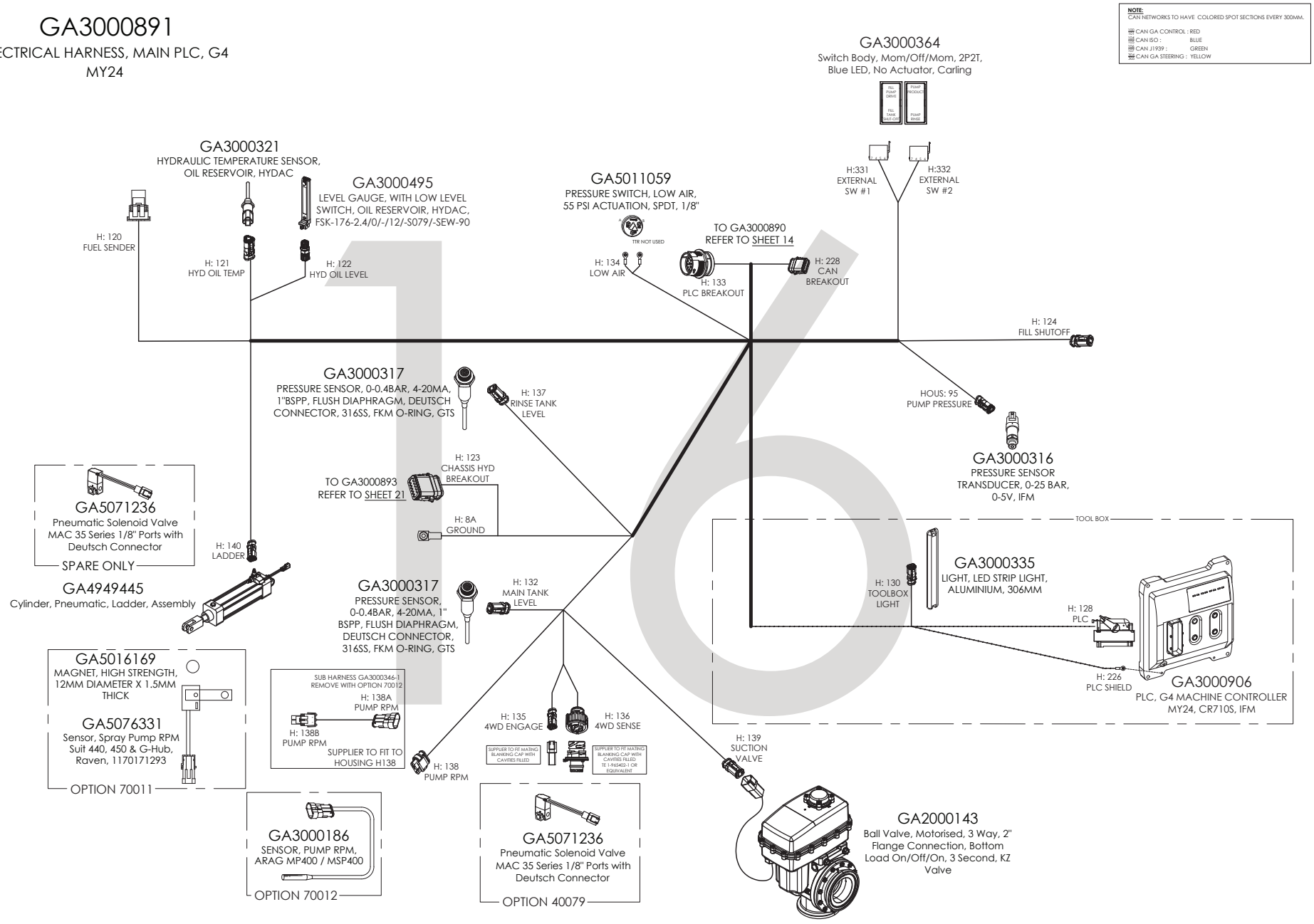

DRG NO:	TITLE:	REV:
GA7500094	G4 ELECTRICAL LAYOUT MY24	01

Electrical Schematic, Bonnet

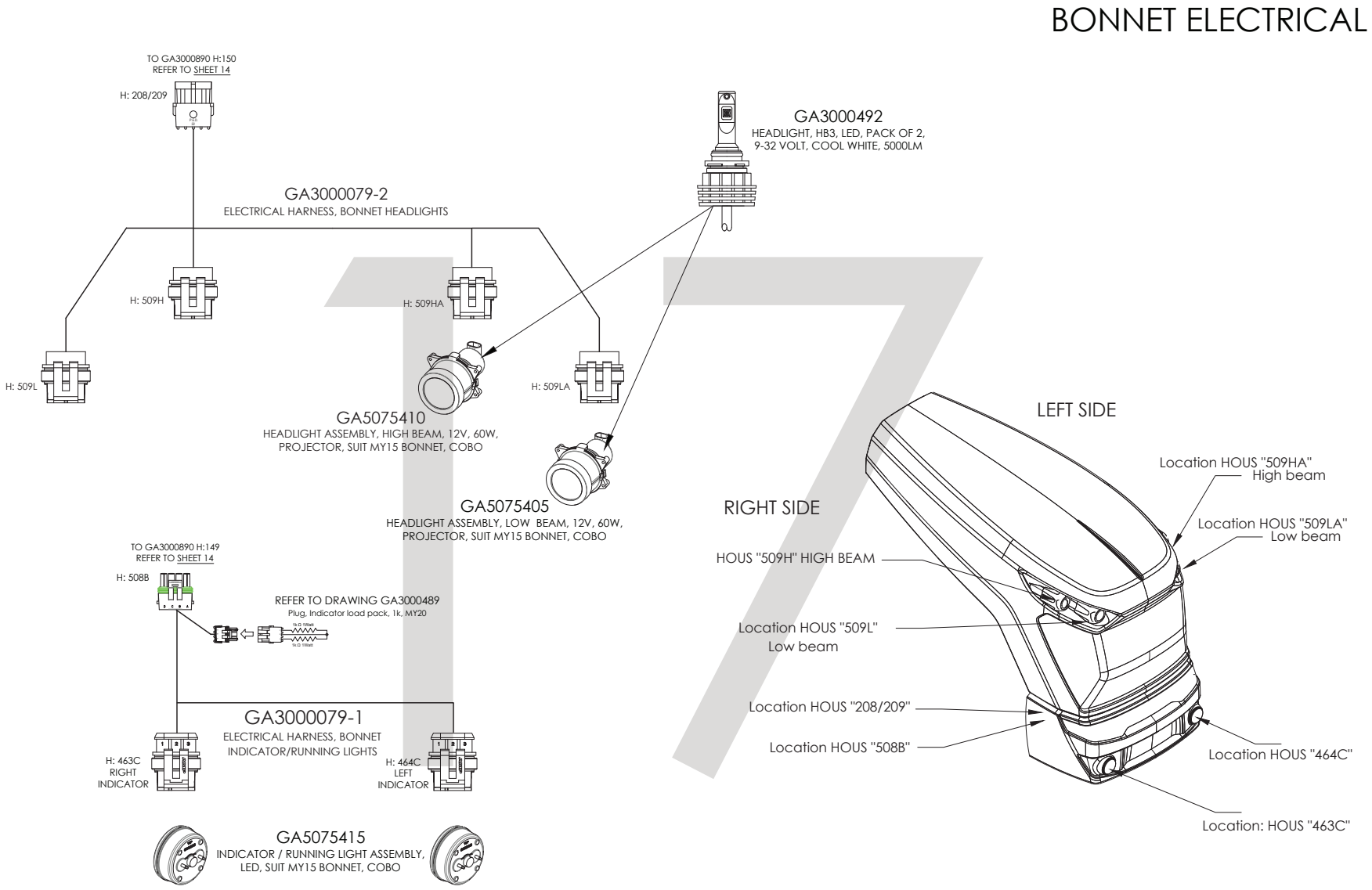

DRG NO:	TITLE:	REV:
GA7500094	G4 ELECTRICAL LAYOUT MY24	01

Electrical Schematic, Rear View Camera & Console Harnesses

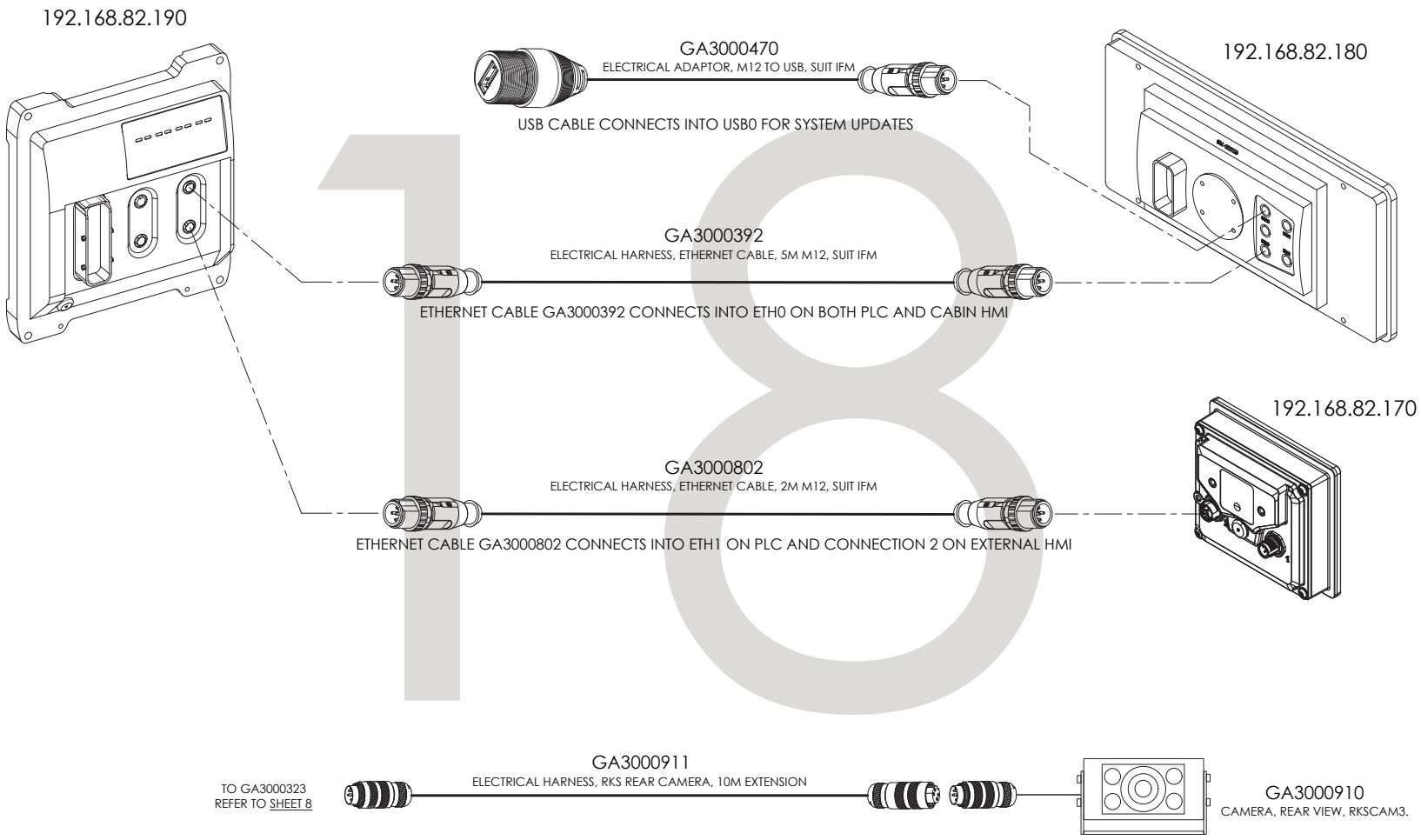

DRG NO:	TITLE:	REV:
GA7500094	G4 ELECTRICAL LAYOUT MY24	01

Electrical Schematic, Transmission

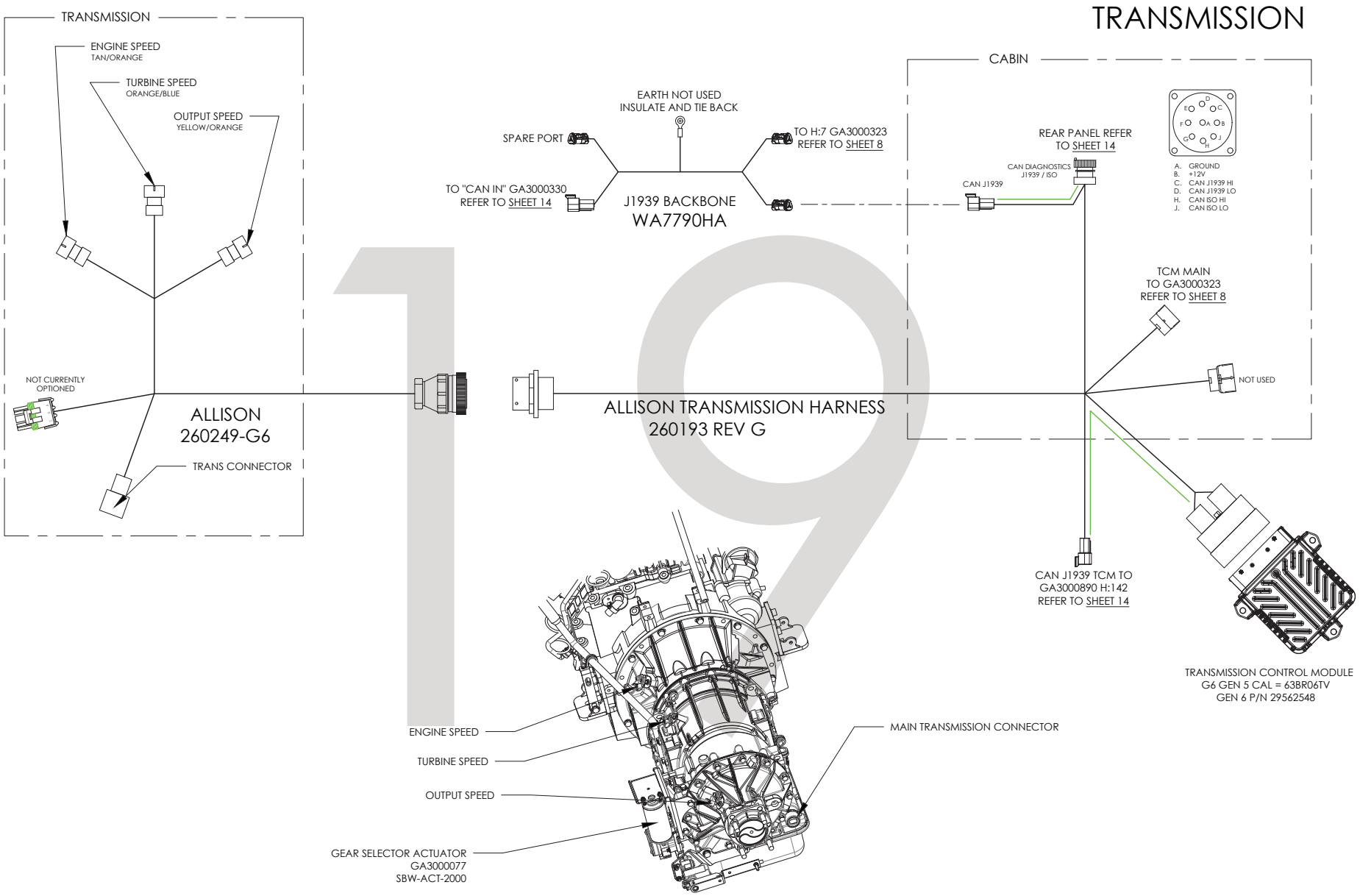

DRG NO:	TITLE:	REV:
GA7500094	G4 ELECTRICAL LAYOUT MY24	01

Electrical Schematic, Boom Centre

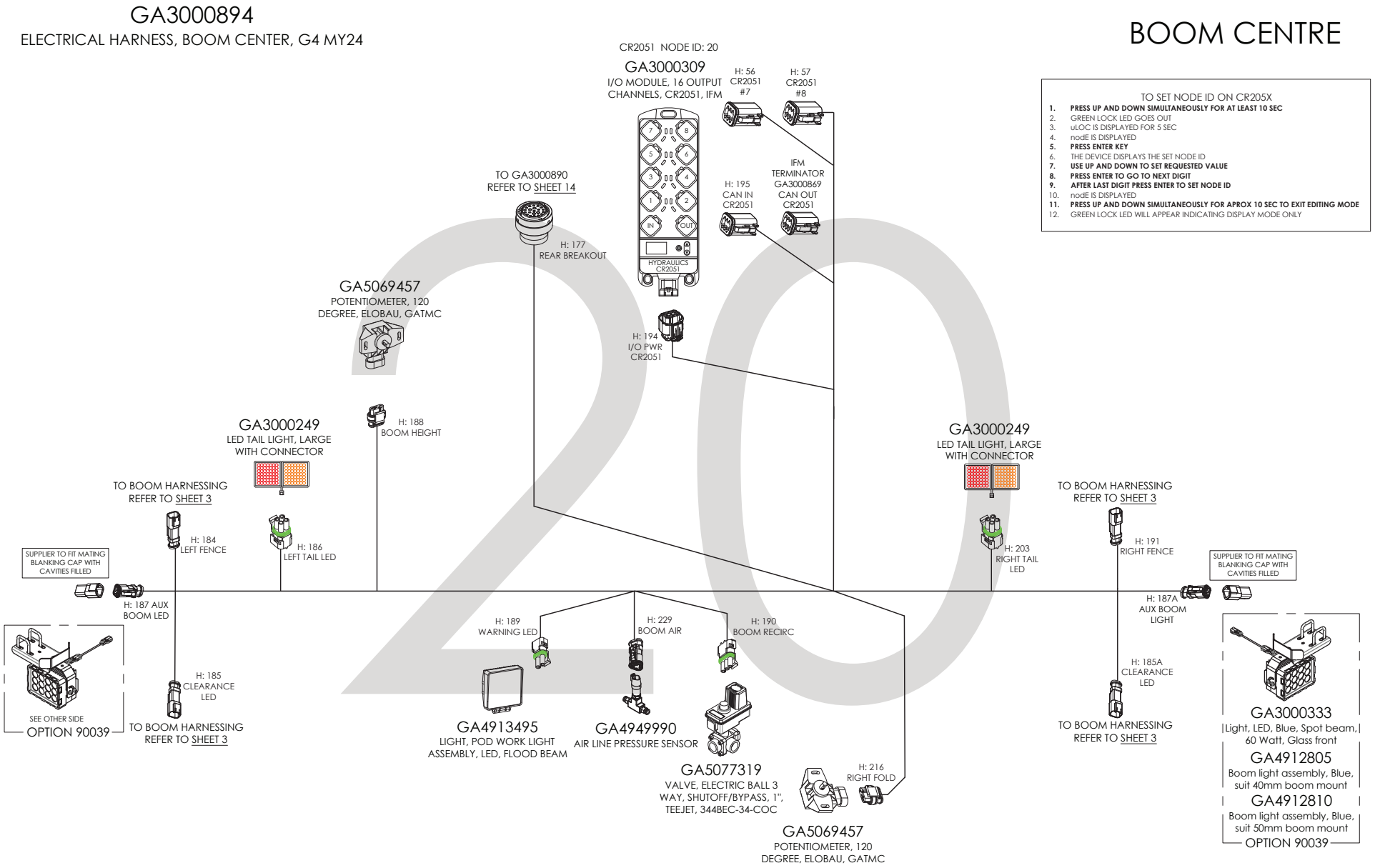

DRG NO:	TITLE:	REV:
GA7500094	G4 ELECTRICAL LAYOUT MY24	01

Electrical Schematic, Chassis Hydraulics

CHASSIS HYDRAULICS

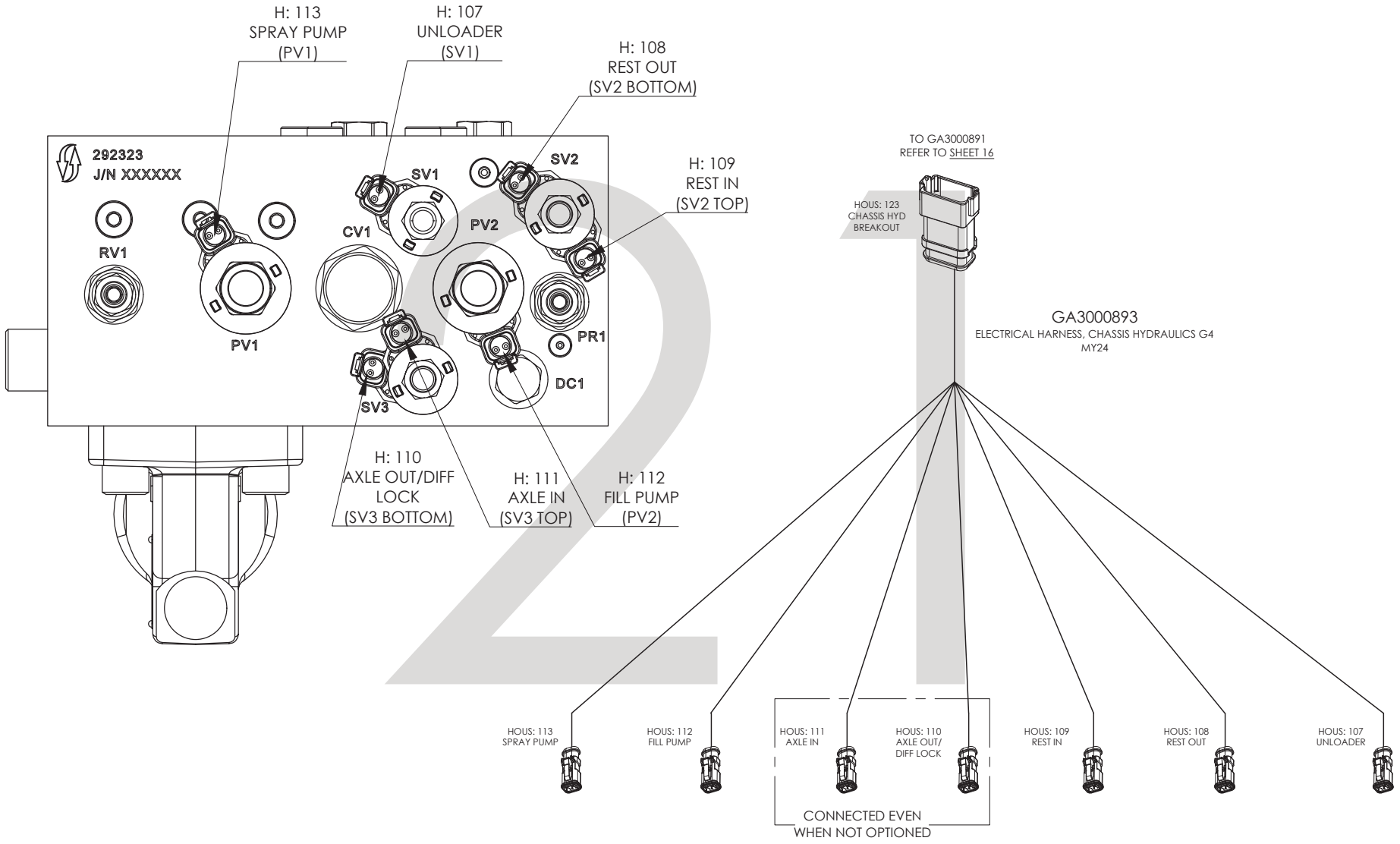

DRG NO:	TITLE:	REV:
GA7500094	G4 ELECTRICAL LAYOUT MY24	01

Electrical Schematics, Boom Hydraulics

BOOM HYDRAULICS

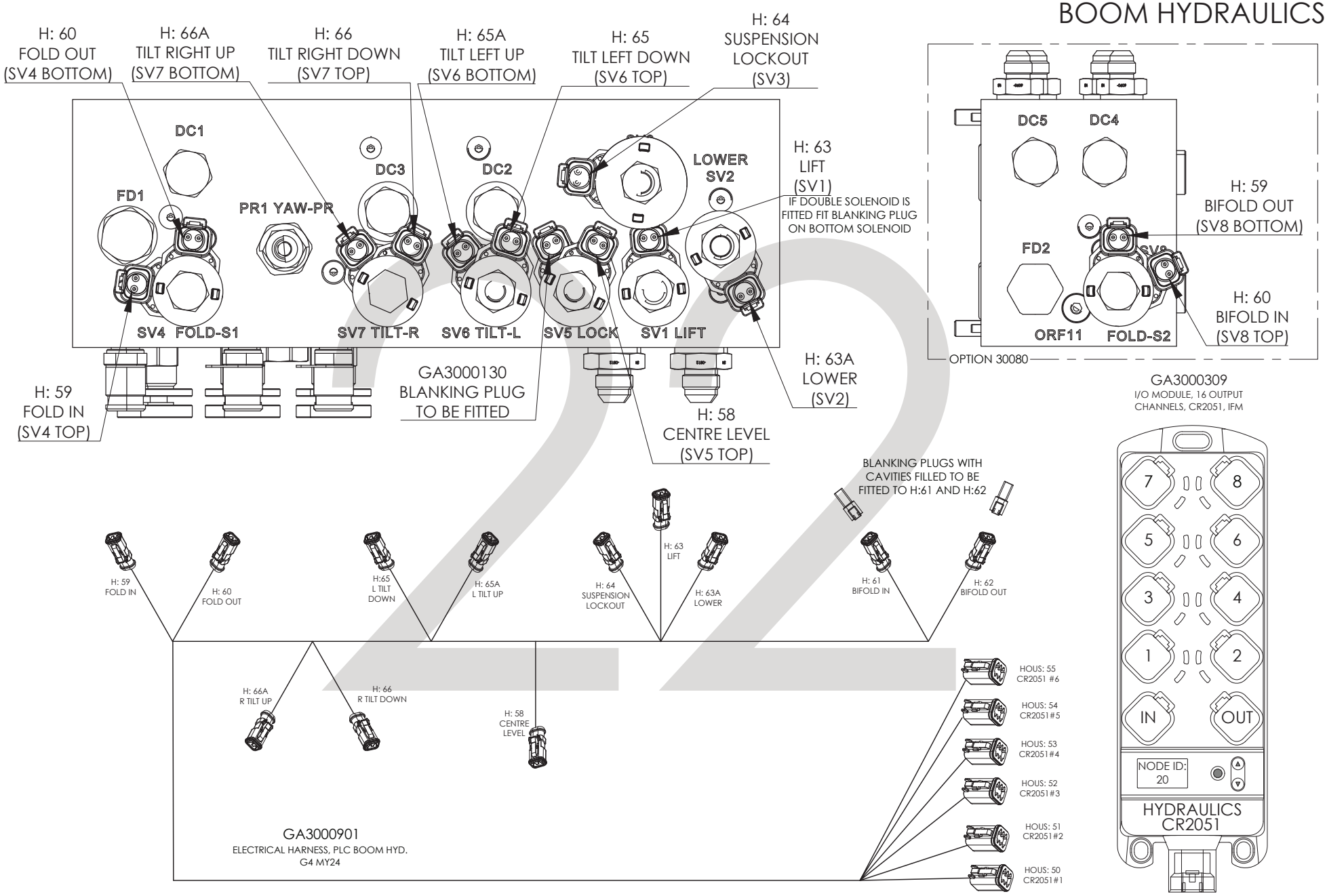

DRG NO:	TITLE:	REV:
GA7500094	G4 ELECTRICAL LAYOUT MY24	01

Electrical Harness, CANBUS Network

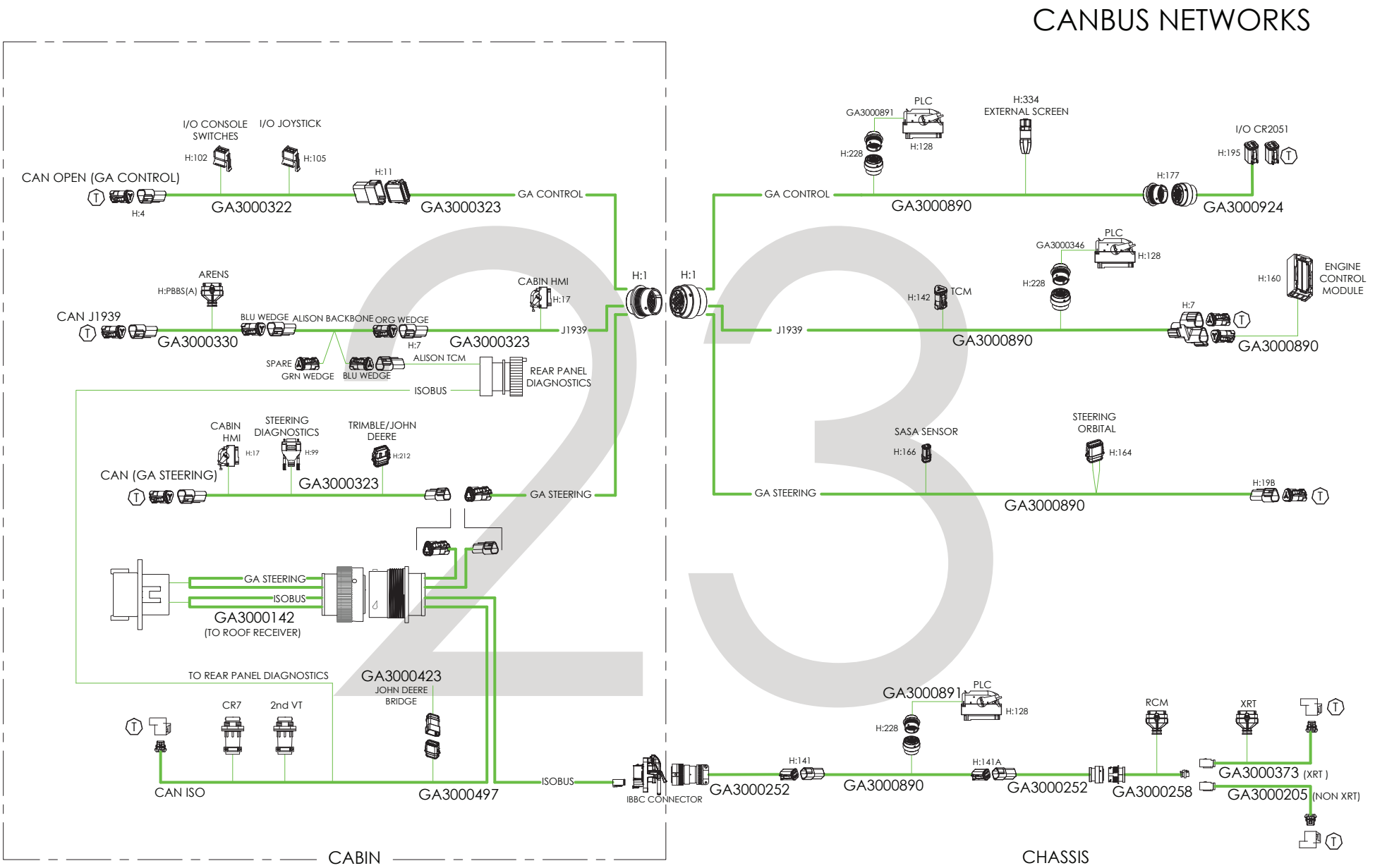

DRG NO:	TITLE:	REV:
GA7500094	G4 ELECTRICAL LAYOUT MY24	01

Electrical Schematic, Control Modules

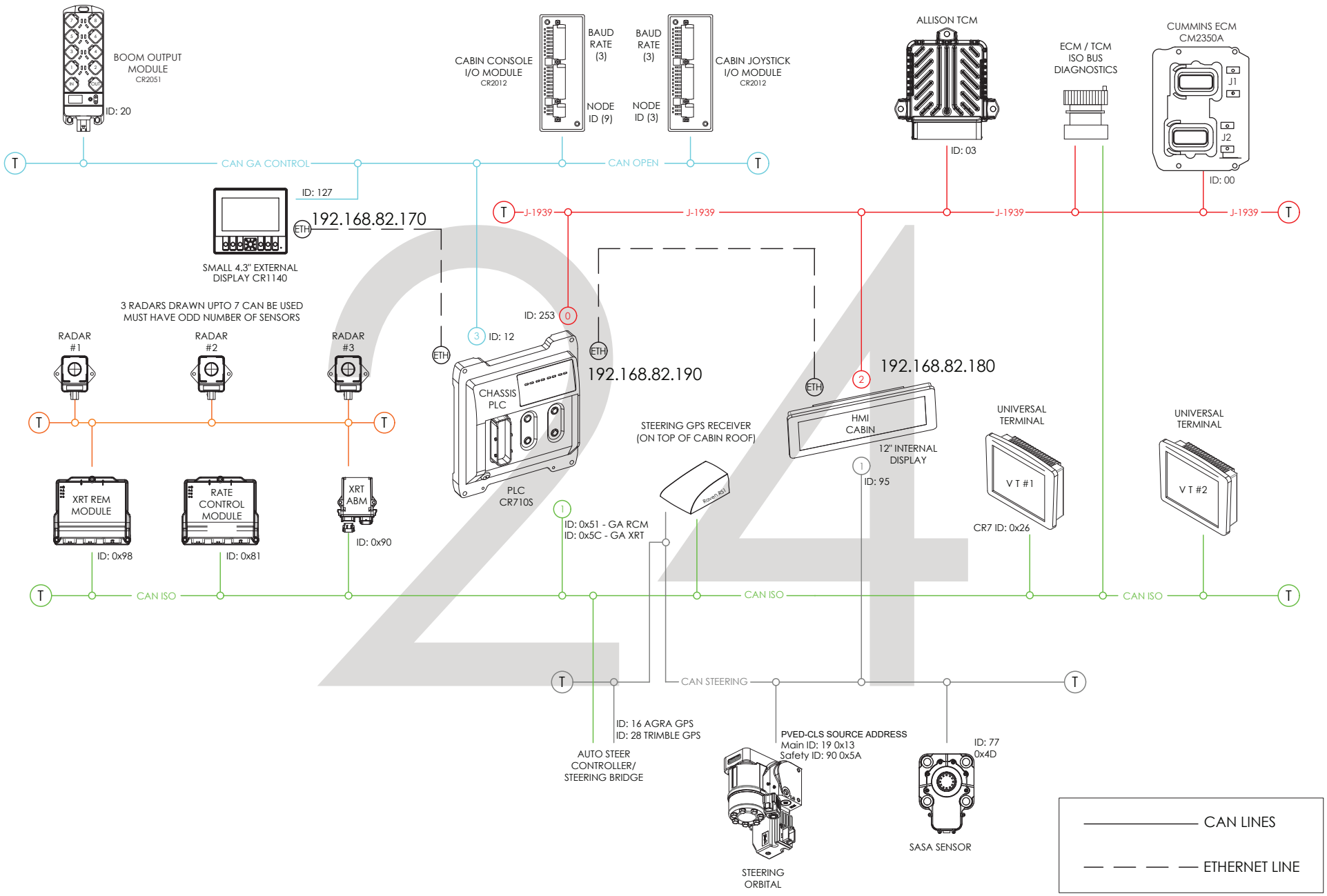

DRG NO:	TITLE:	REV:
GA7500094	G4 ELECTRICAL LAYOUT MY24	01

Electrical Harnesses

HARNESSES			
PART NUMBER	DESCRIPTION	ASSEMBLY	PAGE
260193 REV G	ELECTRICAL HARNESS, ALLISON TRANSMISSION	CABIN	19
260429-G6	TRANSMISSION HARNESS	ENGINE	19
GA3000030	TERMINATOR, CAN, ACTIVE, SUIT ISO BUS, RAVEN	SPARE PART ONLY	1,2
GA3000062	RAVEN ISO TO TRIMBLE FMX/FM1000, 1050, 2050, GFX	CABIN	5
GA3000079	ELECTRICAL HARNESS, BONNET INDICATOR/RUNNING LIGHTS	BONNET	17
GA3000142	ELECTRICAL HARNESS, ROOF CABLE EXTENSION, MY17, RAVEN 11150172311	CABIN	5
GA3000148	ELECTRICAL HARNESS, JD STARFIRE ROOF ADAPTER, MY17, RAVEN 11150172369	CABIN	5
GA3000152	TRIMBLE 372 ANTENNA ROOF ADAPTOR 11150172370	CABIN	5
GA3000198	ELECTRICAL HARNESS, SUIT CR7 ISO VT BASIC, 11157300092, RAVEN	CABIN	5
GA3000200	DISPLAY, ISO BUS UNIVERSAL TERMINAL, CR7, RAM MOUNT, RAVEN 11172295005UN	CABIN	5
GA3000205	ELECTRICAL HARNESS, ISO TERMINATOR CONNECTION, SUIT RCM, RAVEN 11157100005	SPARE PART ONLY	1,2
GA3000252	ELECTRICAL HARNESS, RCM, G6 CHASSIS 11157302046	CHASSIS	2
GA3000258	ELECTRICAL HARNESS, RCM, 16 SECTION 3 TIER, BOOM CENTER 11157302047	CENTRE	2
GA3000260	BOOM INNER 1 TIER (TIER 3) 3TS PRO, 11157302050	BOOMS	3
GA3000264	ELECTRICAL HARNESS, RCM, 16 SECTION 3 TIER, BREAKOUT. 11157302053	CENTRE	3
GA3000270	BOOM OUTER 1 TIER (TIER 3) 3TS PRO, 11157302051	BOOMS	3
GA3000322	ELECTRICAL HARNESS, CONSOLE, G6 MY20	CABIN	10
GA3000323	ELECTRICAL HARNESS, MAIN CABIN, G6 MY20	CABIN	8
GA3000326	ELECTRICAL HARNESS, CABIN POWER KIT, G6 MY20	CABIN	9
GA3000330	ELECTRICAL HARNESS, ARENS PBS, G6 MY20	CABIN	10
GA3000334	SPEAKER, 5W POWER, 8 OHM, 1.2M CABLE WITH 3.5MM JACK, BLACK	CABIN	8
GA3000370	ECU, RAVEN XRT, AUTOBOOM, ABM, WITH AUTOBOOM UNLOCK 10630174090	CENTRE	4
GA3000371	ECU, ISOBUS, RAVEN EXPANSION MODULE, REM, XRT 10630173965	CENTRE	4
GA3000373	ELECTRICAL HARNESS, RAVEN XRT MAIN, GOLDACRES SPEC, 11150235141	CENTRE	4
GA3000377	ELECTRICAL HARNESS, RAVEN XRT SUPER SEAL POSITION SENSOR TO 4 PIN, 11154010069	CENTRE	4
GA3000378	ROTARY SENSOR KIT, WITH LOOSE HARDWARE, RTP, 50 DEGREE, RAVEN XRT, 11170235009	CENTRE	4
GA3000379	DAMPER, MR, RAVEN XRT, VARIABLE, MAGNETO-RHEOLOGICAL, 6" STROKE, 13141000001	CENTRE	4
GA3000382	SENSOR, RAVEN XRT BOOM HEIGHT RADAR, 10630173962	CENTRE & BOOMS	4
GA3000386	ELECTRICAL HARNESS, RAVEN XRT PRIMARY BOOM, 35', 11150235023	BOOMS	4
GA3000387	ELECTRICAL HARNESS, RAVEN XRT SECONDARY BOOM, 30', 11150235028	BOOMS	4
GA3000392	ELECTRICAL HARNESS, ETHERNET CABLE, 5M M12, SUIT IFM	CABIN	18
GA3000416	NODE, CAN BRIDGE SUIT GOLDACRES TO JOHN DEERE STEERING, AGRA-GPS	CABIN	5
GA3000423	ELECTRICAL HARNESS, AUTO STEER, JD, MY20, G6.	CABIN	5
GA3000470	ELECTRICAL ADAPTOR, M12 TO USB, SUIT IFM	CABIN	18
GA3000474	ELECTRICAL HARNESS, RCM, SECTION CONTROL, INNER BOOM, 36M, G6 MY20 11157302069	BOOMS	3
GA3000475	ELECTRICAL HARNESS, RCM, SECTION CONTROL, OUTER BOOM, 36M, G6 MY20 11157302070	BOOMS	3
GA3000497	ELECTRICAL HARNESS, MAIN ISO BUS SIDE CONSOLE ARMREST, MY20, RAVEN	CABIN	5
GA3000513	ELECTRICAL HARNESS, HAWKEYE 2 JUMPER, RAVEN, 11152005070B	BOOMS	1
GA3000514	ELECTRICAL HARNESS, RCM HAWKEYE 2 OUTPUT CABLE, 36M BOOM, 11152005065	CENTRE	1
GA3000515	ELECTRICAL HARNESS, HAWKEYE POWER CABLE, 11152005008	CHASSIS	1
GA3000516	ELECTRICAL HARNESS, 36M BOOM PRIMARY, HAWKEYE 2, 120 X 10", 11152005138	BOOMS	1

HARNESSES			
PART NUMBER	DESCRIPTION	ASSEMBLY	PAGE
GA3000517	ELECTRICAL HARNESS, 36M BOOM SECONDARY, HAWKEYE 2, 120' X 10", 11152005139	BOOMS	1
GA3000518	ELECTRICAL HARNESS, 36M BOOM OUTER, HAWKEYE 2, 120' X 10", 11152005140	BOOMS	1
GA3000521	ELECTRICAL HARNESS, HAWKEYE 2, BOOM OUTER TIP, 3 NCV 250MM, 11152007011	BOOMS	1
GA3000580	ELECTRICAL HARNESS, HAWKEYE 2, 36M BOOM INNER, 500MM, 11152005319	BOOMS	1
GA3000581	ELECTRICAL HARNESS, HAWKEYE 2, 36M BOOM MID, 500MM, 11152005320	BOOMS	1
GA3000582	ELECTRICAL HARNESS, HAWKEYE 2, 36M BOOM OUTER, 500MM, 11152005321	BOOMS	1
GA3000583	ELECTRICAL HARNESS, HAWKEYE 2, 36M BOOM OUTER TIP, 2 NCV, 500MM, 11152007022	BOOMS	1
GA3000600	ELECTRICAL HARNESS, G6 MY20 SERIES 2 HAWKEYE MOD KIT	CHASSIS	1
GA3000640	FIELD COMPUTER, VIPER 4+ WITHOUT GPS, NO ANTENNA, RAVEN, 11175010010B	CABIN	5
GA3000644	WEATHER STATION, WATCHDOG, SUIT VIPER 4, WITH ACTIVATION, RAVEN, 11170171658	CABIN	5
GA3000645	ELECTRICAL HARNESS, VIPER 4 CONSOLE GEN II, RAVEN, 11157300028	CABIN	5
GA3000647	ELECTRICAL HARNESS, VIPER 4 ADAPTER, RAVEN, 11157300045	CABIN	5
GA3000650	STEERING CONTROLLER, RS1 KIT, GPS, INTERNATIONAL 2G / 3G MODEM, SC1, RAVEN, 11175001042	CABIN	5
GA3000653	ELECTRICAL HARNESS, RS1 ROOF, RAVEN, 11154010226	CABIN	5
GA3000654	ELECTRICAL HARNESS, SC1 TO GOLDACRES CAN, RAVEN, 11157302082	CABIN	5
GA3000655	NODE, SC1, ISOBUS STEERING CONTROLLER, RAVEN, 10630173990	CABIN	5
GA3000660	SLINGSHOT FIELD HUB 2.1 INTERNATIONAL, WIFI, 4G (SERVICE SUBSCRIPTION REQUIRED), RAVEN, 11170171825	CABIN	5
GA3000667	GPS ANTENNA, 700S, RAVEN, 10632000011	CABIN	5
GA3000668	ELECTRICAL HARNESS, 700S TO GOLDACRES ROOF ADAPTER, RAVEN, 11154010227	CABIN	5
GA3000669	ELECTRICAL HARNESS, 500S TO GOLDACRES ROOF ADAPTER, RAVEN, 11154010228	CABIN	5
GA3000671	GPS ANTENNA, 500S, RAVEN, 10632000006	CABIN	5
GA3000782	CABLE, DIAGNOSTIC, NCV CAN IN BREAKOUT, HAWKEYE 2 11152005108	CENTRE	15
GA3000783	CABLE, ECU ADAPTOR TEE, NCV GATEWAY 11150172642	CENTRE	15
GA3000797	ELECTRICAL HARNESS, BILBERRY RCM LINK MAIN CHASSIS	CHASSIS	15
GA3000853	ELECTRICAL HARNESS, RCM TO 10 SECTION RAPID FIRE BOX, 3TS	CENTRE	3
GA3000879	ELECTRICAL HARNESS, FENCE AND CLEARANCE INNER AND OUTER, 36M BOOM	BOOMS	3
GA3000890	ELECTRICAL HARNESS, MAIN CHASSIS, G4 MY24	CHASSIS	14
GA3000891	ELECTRICAL HARNESS, CHASSIS PLC, G4 MY24	CHASSIS	16
GA3000892	ELECTRICAL HARNESS, BATTERY KIT, G4 MY24	CHASSIS	13
GA3000893	ELECTRICAL HARNESS, CHASSIS HYDRAULICS G4 MY24	CHASSIS	21
GA3000894	ELECTRICAL HARNESS, BOOM CENTER, G4 MY24	CENTRE	20
GA3000901	ELECTRICAL HARNESS, PLC BOOM HYDRAULICS, G4 MY24	CENTRE	22
GA3000902	ELECTRICAL HARNESS, MAIN POWER HARNESS, SUIT G4 S2 WITH BILBERRY	CHASSIS	15
GA3000911	ELECTRICAL HARNESS, RKS REAR CAMERA, 15M EXTENSION	CABIN	18
GA3000923	ELECTRICAL HARNESS, WHEEL ANGLE SENSOR ADAPTOR, DEUTSCH TO MQS, G4 MY24	FRONT AXLE	14
GA3000927	ELECTRICAL HARNESS, CHEM PUMP SWITCH, SPECIAL 3PL MY23	PLUMBING POD	14
GA5020920	DUST CAP, MALE, 24 SHELL, ALUMINIUM, DEUTSCH, HDC34-24	CENTRE	1
GA5054350	DEUTSCH 120 OHM TERMINATOR	SPARE PART ONLY	-
GA5076178	CABLE, 6' CAN BUS WITH "T" 11150171326	CABIN	15
GA5076194	CABLE, 12' EXTENSION CAN 11150171386	CHASSIS	15
GA5076195	CABLE, 24' EXTENSION CAN 11150171387	CHASSIS	15

Schematic, Engine Cooling System

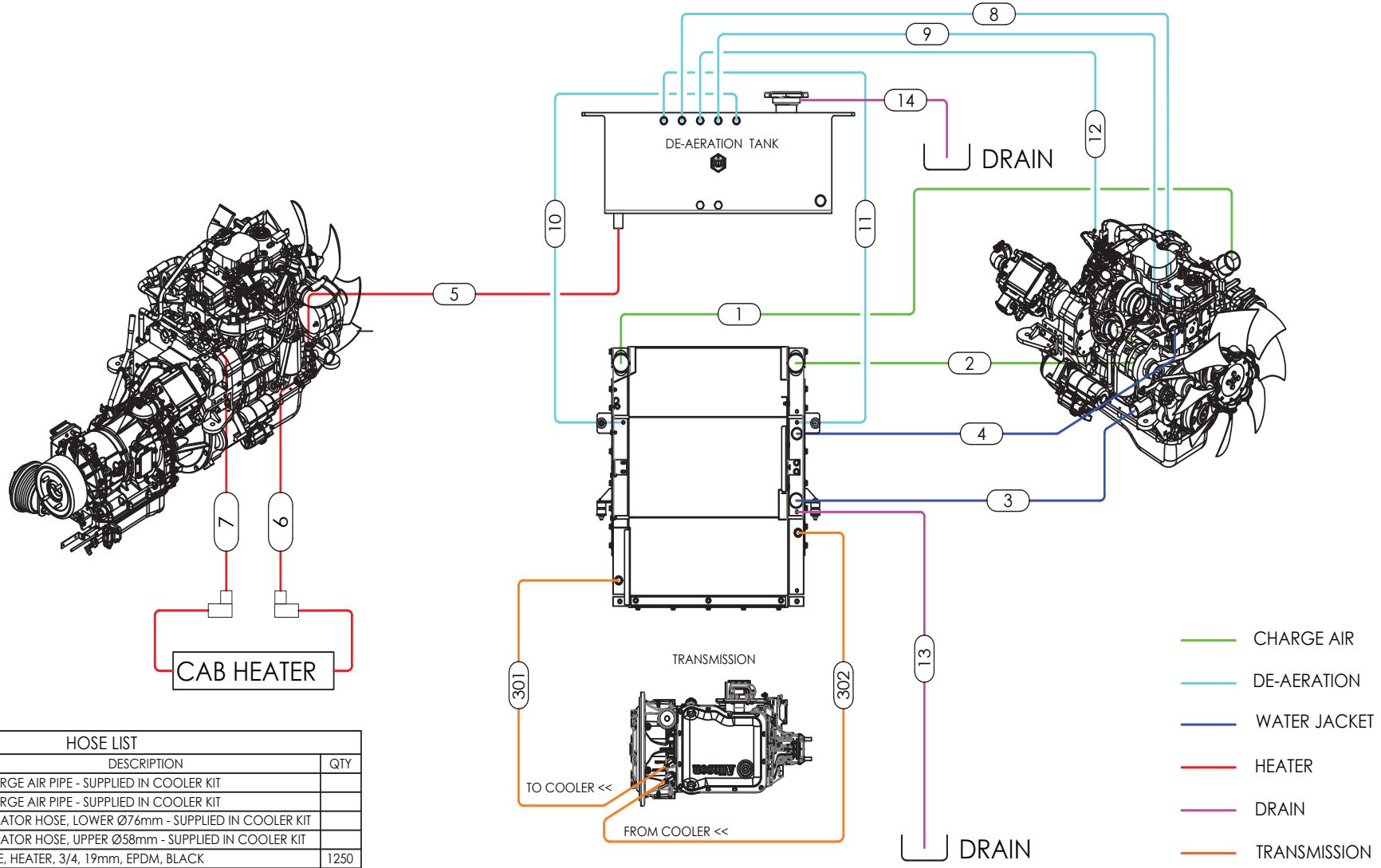

HOSE LIST			
ITEM #	PART #	DESCRIPTION	QTY
1	GA5078956	CHARGE AIR PIPE - SUPPLIED IN COOLER KIT	
2		CHARGE AIR PIPE - SUPPLIED IN COOLER KIT	
3	GA5078959	RADIATOR HOSE, LOWER Ø76mm - SUPPLIED IN COOLER KIT	
4	GA5078957	RADIATOR HOSE, UPPER Ø58mm - SUPPLIED IN COOLER KIT	
5	GA5069260	HOSE, HEATER, 3/4, 19mm, EPDM, BLACK	1250
	GA5053640	RAWHIDE HOSE PROTECTION 36mm	1220
6		5/8" HEATER HOSE - SUPPLIED WITH CAB	3000
7		5/8" HEATER HOSE - SUPPLIED WITH CAB	2600
8	GA5069255	HOSE, HEATER, 1/4, 6mm, EPDM	750
9	GA5010211	HOSE, FUEL LINE, 3/8 ID, BLACK	750
10	GA5069255	HOSE, HEATER, 1/4, 6mm, EPDM	
11	GA5069255	HOSE, HEATER, 1/4, 6mm, EPDM	1530
12	GA5010211	HOSE, FUEL LINE, 3/8 ID, BLACK	250
13	GA5010211	HOSE, FUEL LINE, 3/8 ID, BLACK	
14		RELIEF DRAIN HOSE	
301	GA3501543	1/2" HYDRAULIC HOSE	
302	GA3501544	1/2" HYDRAULIC HOSE	

GA7500106 GOLDACRES	SCHEMATIC, COOLING, G4, S2	REV 01

22 - Sprayer Options

CROP CRUISER G4 S2 4000L	
Option	DESCRIPTION
10061	33TS RAPID FIRE AND RAPID FLOW 250MM SPACING (STAGGERED)
10067	3TS RAPID FIRE WITH RAPID FLOW 250MM SPACING (STAGGERED) WITH TRIJETS ON TIER 1
10069	3TS RAPID FIRE WITH RAPID FLOW 250MM SPACING (STAGGERED) WITH TRIJETS ON TIER 1 & 2
10072	3TS PRO (MUST SELECT RCM IF NOT STANDARD)
10073	HAWKEYE 2ND GENERATION PWM SYSTEM - 250MM SPACING
10074	HAWKEYE 2ND GENERATION PWM SYSTEM - 500M SPACING
20005	NOZZLE TYPE TO BE FITTED - OTHER
20006	NOZZLE TYPE - TEEJET TTI (SUITABLE FOR HAWKEYE 2)
20007	NOZZLE TYPE FITTED - TEEJET AIXR
20008	NOZZLE TYPE FITTED - TEEJET AI
20020	BRAODACRE PLUMBING
20030	ROW CROP PLUMBING
20032	NOZZLE SIZE (015) FOR TIER 1
20033	NOZZLE SIZE (02) FOR TIER 1
20034	NOZZLE SIZE (025) FOR TIER 1
20035	NOZZLE SIZE (03) FOR TIER 1
20036	NOZZLE SIZE (04) FOR TIER 1
20037	NOZZLE SIZE (OTHER) FOR TIER 1 - (SPECIFIED)
20038	NOZZLE SIZE (02) FORT IER 2
20039	NOZZLE SIZE (025) FOR TIER 2
20040	NOZZLE SIZE (03) FOR TIER 2
20041	NOZZLE SIZE (04) FOR TIER 2
20042	NOZZLE SIZE (OTHER) FOR TIER 2 (SPECIFIED)
20045	NOZZLE SIZE (015) FOR TIER 3
20046	NOZZLE SIZE (02) FOR TIER 3
20047	NOZZLE SIZE (025) FOR TIER 3
20048	NOZZLE SIZE (OTHER) FOR TIER 3
20062	REMOTE GREASE NIPPLE BANK
20081	AUTO GREASER - GROENEVELD BEKA EP-1
20084	HEAVY GREASE NLGI 2
20085	LIGHT GREASE NLGI 0
30074	XRT AUTO HEIGHT CONTROLLER WITH 5 SENSORS
30080	BI-FOLD (TO SUIT 24-42M TRITECH BOOMS ONLY)
40001	520/85R42 (20.8 X 42), HR45 X-LOAD

CROP CRUISER G4 S2 4000L	
Option Number	DESCRIPTION
40018	WHEELS AND TYRES 380/90R46 FRONT AND REAR
40019	WHEELS AND TYRES 460/85R38 (18.4R38) RADIAL FRONT AND REAR
40028	WHEELS AND TYRES 480/80R46 FRONT AND REAR
40029	TRANSPORT WHEELS AND TYRES (11.2R44)
40047	MANUAL ADJUST WHEEL TRACK 3000-4000MM, 2WD
40069	TWO WHEEL DRIVE (2WD) WITH 3000MM FIXED WHEEL TRACK
40071	TWO WHEEL DRIVE (2WD) WITH 2000MM FIXED WHEEL TRACK
40077	HYDRAULIC ADJUST WHEEL TRACK 2000-3000MM 2WD
40079	FOUR WHEEL DRIVE (4WD) WITH FIXED WHEEL TRACK SET TO 3000MM
40082	TOWBAR (ONLY FOR SPRAYERS WITH FIXED AXLE TRACK WIDTH)
40115	CROP DIVIDERS FOR FRONT WHEELS
40120	CROP DIVIDERS FOR REAR WHEELS
50020	MICROMATIC RINSE SOCKET AND MICROMATIC COUPLER
50055	3" FILL PUMP
50058	3" SEPARATE FRONT FILL
55120	CHEMICAL TRANSFER PUMP (SOTERA) TANK OR HOPPER FILL
60018	RAVEN CR7 ISO BUS VT
60019	UNLOCK CODE FOR RAVEN HAWKEYE 2 INDIVIDUAL NOZZLE CONTROL (PREMIUM)
60102	NO GUIDANCE
60111	JOHN DEERE ADAPTION KIT
65241	WEEDETECT BILBERRY TO SUIT HAWKEYE 2 36M BOOM (12 CAMERAS)
65242	WEEDETECT BILBERRY USING 3TS 250MM 16 SECTIONS 36M BOOM (12 CAMERAS)
65256	NO WEEDETECT
65276	SPECIALISED LIGHTS FOR NIGHT TIME SPOT SPRAYING TO SUIT 36M BOOM (12 LIGHTS) FITTED
65290	GREEN ON BROWN ALGORITHM UNLIMITED USE 36M BOOM
65400	VIPER 4+ TO SUIT SERIES 2 G6 USING 3RD PARTY GPS (USER STEER BY CAN)
65401	VIPER 4+ TO SUIT SERIES 2 G6 USING RAVEN RS1 GPS (USER STEER BY CAN)
65402	VIPER 4+ TO SUIT SERIES 2 G6 USING RAVEN 700S GPS (USER STEER BY CAN)
65420	SLINGSHOT MODEM
65425	END OF ROW TURN UNLOCK CODE
65430	WEATHER STATION
70011	260L/MIN DIAPHRAGM PUMP - HYDRAULIC DRIVE
70012	CENTRIFUGAL PUMP
90039	LIGHTING PACKAGE UPRADE

Goldacres Terms & Conditions of Sale & Warranty

1. These terms and conditions apply to all goods and/or services supplied by us to you. You are agreeing to them by placing an order with us.
2. Unless you have a previously approved account with us you must pay us the purchase price for the goods and/or services we supply to you, together with any other applicable fees or charges immediately on delivery or collection of the goods, or if ordered online or by phone on the placement of your order. All repairs or servicing must be paid for before we will release the goods to you. If you do have an
3. Time is of the essence for all payments required under these conditions.

Unless specifically stated otherwise, all prices which we quote or est4. imate to you are inclusive of GST for goods supplied within Australia and exclusive of GST for goods exported outside of Australia. If GST is payable on a Taxable Supply made by us to you, then you must also pay the amount of GST payable in respect of that Taxable Supply as an additional payment.

5. You must pay interest on any amounts not paid by the due date at a rate 2% higher than the rate for the time being fixed under section 2 of the Penalty Interest Rates Act 1983 (Victoria) as at the date the amount became due.
6. Property in goods supplied (and in any goods which we may have previously supplied to you) remains with us until we have been paid in full for all amounts you owe us including payment for the goods and any applicable interest, fees and charges, and until then:

   a. you hold the goods only as a bailee and have no right to claim any other interest in the goods, including any security for any liquidated or unliquidated debt or obligation that we owe you, or any lien over the goods;

   b. we may enter and recover possession of the goods from any site owned, possessed or controlled by you and you

   c. you must not deliver or on-supply any of the goods (nor any document of title to them) to any person, but if you do then you hold the proceeds of the on-supply of the goods on trust for us and must pay the amount to us immediately when received;

   d. you must not allow any person to have or acquire any security interest in the goods nor create any absolute or defeasible interest in the goods in relation to any third party except as we may authorise;

   e. you must insure the goods for their full insurable or replaceable value (whichever is higher) and provide us with details of the insurance if we request it;

   f. you must not remove, deface or obliterate any identifying mark or number on any of the goods;

   g. your right to possession of the goods ceases if we recall or recover the goods, or if you become insolvent, you enter into voluntary or involuntary administration or receivership, or a petition is filed for your bankruptcy or winding up.

You further agree:

   h. that the retention of title under this clause is a security interest within the meaning of the Personal Property Securities Act 2009 (Cth) ("PPSA");

   i. to grant us a purchase money security interest (as that term is defined in the PPSA) in relation to the goods;

   j. to contract out of all of your existing and future rights under the provisions referred to in paragraphs (a) through to (r) of section 115(1) of the PPSA, to the full extent permitted;

   k. to sign any documents or do any things which we may reasonably require to enable us to register a financing statement or financing change statement on the register (as defined in the PPSA);

   l. to pay any costs we incur in registering and maintaining a financing statement (including registering a financing change statement) and enforcing the security interest created under these terms and conditions.

7. Risk in the goods passes to you upon their delivery to or collection by you.
8. You hereby indemnify us and our employees, directors, contractors and agents against, and release us and them from, any loss (including reasonable legal costs and expenses) or liability incurred by us and/or them arising from any claim, demand, suit, action or proceeding by any person against us and/or them where such loss or liability arose directly or indirectly from or in connection with any breach of these terms and conditions or from use of the goods and/or services unless such liability is directly caused by the negligence or default of the person indemnified.
9. You, or anyone on your behalf must not, and you must take steps to ensure that your employees, agents and contractors do not, nor assist anyone else to:

   a. copy, memorise, reproduce, misappropriate or reverse engineer the whole or any part of the goods

   b. challenge, contest or oppose any of our intellectual property rights

   c. use any name or logo associated with the goods other than as we authorise you

   d. divulge our confidential information to any person or use it for your own benefit except as we have expressly authorised or as required by law.

10. Any specifications, drawings, details, statistics or performance figures we may have given you about the goods and/or services are only estimates and any deviation does not entitle you to make any claim against us. Any sample is provided only to indicate the general nature of the product, and we do not warrant that goods supplied will exactly correspond with any sample or with any previous or future goods supplied.
11. Except as stated in any separate written warranty we may provide you with the goods or a quote, under no circumstances will we have any liability to replace or repair defects in the goods where:

    a. the defects have not arisen solely from faulty materials supplied by us or faulty workmanship by us;

    b. the goods have received maltreatment, inattention or interference or have been used, applied, packaged or stored other than in accordance with our instructions and recommendations;

    c. products not manufactured by or approved by us have been used with the goods.

12. Except as provided in these conditions, all express and implied warranties guarantees and conditions under statute or general law as to merchantability, description, quality, suitability or fitness of the goods for any purpose or as to design, assembly, installation, materials or workmanship or otherwise are expressly excluded. We are not liable for physical or financial injury, loss or damage or for consequential loss or damage of any kind arising out of the application, supply, layout, assembly, installation or operation of the goods or arising out of our negligence or in any way whatsoever. The exceptions in clause (12) extend to any Third Party Accessories installed in the goods.
13. If any condition or warranty is implied into this agreement under the Competition and Consumer Act (2010) (Cth) or any equivalent State or Territory legislation and cannot be excluded, then our liability is limited to one or more of the following:

    a. in the case of goods, the replacement of the goods or the supply of equivalent goods, the repair of the goods, the payment of the cost of replacing the goods or of acquiring equivalent goods, or the payment of the cost of having the goods repaired;

    b. in the case of services, the supplying of the services again, or the payment of the cost of having the services supplied again.

14. Nothing in these conditions is to be read or applied so as to exclude, restrict or modify or have the effect of excluding, restricting or modifying any condition, warranty, guarantee, right or remedy implied by law and which by law cannot be excluded, restricted or modified.
15. Any quotes on pricing provided by us are consistent with the prevailing market at the time of quotation, including considerations as to rates of freight, insurance, customs, duties, exchange, shipping expenses, sorting and stacking charges, cartage, cost of materials and other charges affecting the cost of production prevailing at that date.
16. Any increases in the quote price occurring either before or during the agreement, shall be to your account.
17. Our quotations are open for acceptance within the period stated therein. If no period is stated, our quotations are open for acceptance for (14) fourteen days from the date the quote was given.
18. All prices listed in our quotations and product catalogue are subject to change or alteration without notice.
19. Unless we otherwise agree in writing we accept credit card or eftpos payments only.
20. We do not accept payment by cheque unless we have previously agreed in writing to do so.
21. Any goods you deliver to us must be free of any chemicals. If you deliver goods that are not free of chemicals, you must pay any costs incurred by us including the cost of our own staff in removing and disposing of the chemicals and cleaning the goods.
22. If after 28 days of notifying you that your goods are ready for delivery we have received no communication from you, we retain any rights under the Australian Consumer Law and Fair Trading Act 2012 (Vic) to sell the goods to recover the value of any outstanding debt you may owe us.
23. You are responsible for backing up any Data that you, or your agent, may install on the goods. If the Data is wiped, corrupted, or lost, we are not liable (whether we are negligent or otherwise) for any damage that may result from that Data being wiped, corrupted or lost.
24. Before you use any of our goods you must check, and if necessary adjust, all settings to ensure the goods are properly calibrated.
25. We are not liable to you for any failure by us to perform any of our obligations under this agreement caused by an impediment or circumstance beyond our control.
26. In these terms and conditions,

    a. "we", "us" or "our" means the entity within the Goldacres Group from which you purchase goods and/or services, including, but not limited to:

       i. Goldacres Trading Pty Ltd ACN 061 306 732; and

       ii. Goldacres Sprayer Centre Pty Ltd ACN 639 231 520

    b. "you" or "your" means the individual or company that purchases goods and/or services from us.

    c. "our confidential information" includes all of our secrets, ideas, know how, concepts, information, copyright, computer programs, manuals, precedents whether in writing or in any other form and all other information relating to us or our affairs, businesses, sales, marketing or promotional information, and any information about the ingredients, mix, make-up or manufacturing process of the goods

    d. "goods" includes any associated services except where the context does not permit.

    e. "Third Party Accessories" includes anything incorporated in the goods that is manufactured and supplied to us by a third party.

    f. "Data" includes any information capable of being installed and or stored on an electronic device.

27. Used Goods- For any second hand or used Goods sold, except to the extent that a manufacturer's warranty applies.

    a. all used or second-hand Goods are sold on an "as is where is" basis with all existing or future inadequacies, faults or defects, if any, and whether they are known or unknown.

    b. The Seller does not warrant the second hand or used Goods are fit for any purpose or free from any defects and does not warrant the accuracy of any service or repair history, meter or hour readings and to the extent permitted by law the Buyer releases the Seller from all liability arising or connection with any defects faults or inadequacies in the Goods and any warranty under these terms or at law excludes liability for costs other than what is reasonable or customary to rectify and does not include costs for time or labour, testing, travel or freight or packaging and handling.

GOLDACRES

www.goldacres.com.au