G8 Crop Cruiser Series 3



Manual GA8702409-REV00

Product - GA6000431-G8 8000L

PARTS MANUAL MY25

GOLDACRES

For further information about any of the products shown please visit - www.goldacres.com.au

© Goldacres Trading 2021
This publication and all designs are copyright.

No part, products or designs may be reproduced by any process except in accordance with the Copyright act 1968.

All information in this operator's manual is based on the latest product information available at the time of printing. The policy of Goldacres is one of continuous improvement and as such, Goldacres reserve the right to alter any specifications and designs without notice and without incurring any obligation regarding such changes.

No part of this manual may be reproduced without written permission from Goldacres. All photographs and technical information remain the property of Goldacres.

Goldacres Trading Pty Ltd
3 Morang Crescent
Mitchell Park Vic 3355
Ph: 03 5342 6399
Fax: 03 5342 6308

Contents

01 - Service & Miscellaneous Parts 15

Miscellaneous Parts, Nozzles 16
Miscellaneous Parts, Hose 17
Miscellaneous, Electrical, Replacement Fuse List 18
Miscellaneous, Paints & Corrosion Inhibitors 19
Service Kits 20
Miscellaneous, Greasing 21
Miscellaneous, Pneumatic 22

02 - DFO & Sales Kits 23

03 - Chassis 25

Chassis 26
Cable Tray, IO Modules & Flood Light Mounting 27
Harness and Pneumatic Saddles, LH Side 28
Harness and Pneumatic Saddles, RH Side 29
Boom Recirculation Poly Mounting 30
Pipe Assembly, Boom Recirculation 31
Boom Spray Line, Mounting 32
Engine Mounts 33
Hydraulic Tube, Transmission to Oil Cooler 34
Hydraulic Manifold Mounting 35
Hydraulic Manifold Assembly 36
Hydraulic Tube, Fill Pump to Manifold 37
Accumulator & Hydraulic Tube Fitment 38
Air Line Tee Fitment 39
Harness and Pneumatic Saddles, Rear 40
Air Tanks & Park Brake Control Valve Mounting 41
Air Tank Assembly, Primary, Front Brake & Park Brake 42
Air Tank Assembly, Secondary, Rear Brakes & Accessories 43
Park Brake Control Valve Assembly 44
Proportioning Valve Assembly 45
Pressure Reducing Valve Assembly, Brake Line, 4WD 46
Air Dryer Mounting 47
Air Dryer Assembly 48
Air Bag Dump 49
Access Platform Mounting, RH 50
Work Light Mounting Arm, Front, RH 51
Hand Rail Mounting, Access Platform, RH 52
Access Platform, RH, Hose Guide Bracket & Door Stoppers 53
Access Platform, RH, Hose Guide Bracket Assembly 54
Access Platform, RH, Ladder Assembly 55
Access Platform, RH, Ladder Handles 56
Access Platform Mounting, LH 57
Access Platform, LH, Ladder Assembly 58
Cylinder Assembly, Pneumatic, Ladder 59
Boom Rest, LH Mounting, RIVX 60
Boom Rest, LH, RIVX 61
Boom Rest, LH, Mounting, 48mt 62
Boom Rest, LH 48mt 63
Tread Step, Access Platform 64
Hand Rail Assembly, Access Platform 65
Work Lights & Indicator Mounting, Access Platform 66
Side Mirror, Access Platform 67
Access Platform, Decals 68
Boom Rest, Mounting 36mt & 48mt 69
Boom Rest Assembly, RH, RIVX 70
Boom Rest Assembly, RH, 48mt 71
LH Pod, Mounting 72
Fill Pod Plumbing Assembly 73

3” Fill Pump & Fill Manifold Mounting 74
3” Fill Manifold Assembly 75
3” Fill Pump Assembly 76
Clean Fill, Cross Manifold Assembly 77
Rinse Tank, Cross Manifold Assembly 78
Front Fill, Mount and Assembly 79
Primary Fuel Filter & Alternator Guard Mounting 80
Fuel Filter Assembly, Primary 81
Combination Cooler, Mounting 82
Pipe Mounting, Hydraulic Oil Reservoir 83
Hydraulic Reservoir, Mounting 84
Chassis, Fuel Tank Mounting 85
Fuel Tank Assembly 86
Rinse Tank Mounting 87
Cabin Crossmember, Mounting 88
Cabin Crossmember, Assembly 89
Transfer Case Mounting 90
Ride Height Control Valve, Front 91
Ride Height Control Valve Mounting, Rear Axle 92
Ride Height Control Valve Assembly, Rear, RH 93
Ride Height Control Valve Assembly, Rear, LH 94
Ride Height Link, Short 95
RH Pod, Spray Pump, Mounting 96
Tool Box Mounting 97
Toolbox, Shelf Mounting 98
Toolbox, Hand Wash Tank Mounting 99
Toolbox, External Display Mounting, G-Hub 100
External Display Assembly, G-Hub 101
Tool Box, Strut & Pinchweld 102
Toolbox, Door Assembly 103
Bonnet Mounting 104
Cabin Mounting 105
Main Tank Mounting 106
Tank Drain Assembly 107

04 - Pumps 109

Pump, ACE 650F, Hydraulic Drive, Parts Breakdown 110
Pump, ACE 650F, Hydraulic Drive, Parts List 111
Pump, Banjo M350, Hydraulic Drive, Parts Breakdown 112
Pump, Banjo M350, Hydraulic Drive, Parts List 113
Graco Chemical Pump 114

05 - Tanks 115

Main Tank, 8000L 116
Main Tank, Assembly 117
Tank Inlet, Hopper, 1 1/2” 118
Tank Inlet, Hopper, 1 1/2”, Assembly 119
Tank Inlet, 1” 120
Tank Inlet Assembly, 1” 121
Tank Rinse Nozzle Assembly 122
Main Fill, Shut Off, 3” 123
Valve Assembly, 3” Main Fill, Shut Off 124
Valve Assembly, 3” Front Fill, Shut Off 125
Main Tank, Agitator Assembly 126
Main Tank, Sump 127
Super Mix Agitator Assembly 128
Site Tube Mounting 129
Sight Tube Assembly 130
Plumbing Tee Assembly, Sight Tube 131
Cradle Assembly, Main Tank 132
Hose Guide Bracket Mounting, Main Tank 133
Bracket Assembly, Hose Guide, (Arrangement ‘A’) 134
Bracket Assembly, Hose Guide, (Arrangement ‘B’) 135

Bracket Assembly, Hose Guide, (Arrangement 'C') 136
Bracket Assembly, Hose Guide, (Arrangement 'D') 137
Agitator Plumbing, Main Tank 138
Tank Assembly, Front Mount 3PL. 139
Rinse Tank Assembly. 140
Hand Wash Tank Assembly 141

06 - Front Mount 3PL 143

Stub Mounts, Front Mount 3PL 144
Stands, Spray Pump & Pressure Filter Mounting, Front Mount 3PL 145
Spray Pump Assembly, Front Mount 3PL. 146
Fill & Drain Point Manifold Assembly, Front Mount 3PL. 147
Pressure Filter Assembly, Front Mount 3PL 148
Linkage, Front Mount 3PL 149
Pull Pin Assembly, Adjustable Leg, Front Mount 3PL 150
Tank & Oversize Sign Mounting, Front Mount 3PL, (From S/N 204148) 151
Overflow, Front Mount 3PL 152
Pressure Connector, Camlock Assy, Front Mount 3PL, (Up to S/N 204147) 153
Return Connector, Camlock Assy, Front Mount 3PL, (Up to S/N 204147) . . 154
DM Valve Assembly, Pressure, Front Mount 3PL, (From S/N 204148) 155
DM Valve Assembly, Return, Front Mount 3PL, (From S/N 204148) 156
Overflow Outlet Assembly, Front Mount 3PL 157
Hose Routing Bracket Mounting, Front Mount 3PL, (From S/N 204148) . . . 158
Manifold, DM Ball Valve Assembly, Front Mount 3PL, (From S/N 204148) . . 159
DM Valve & Hose Guide Assembly Mountings, Front Mount 3PL 160
Connection Point & Swivel Assy, Quick Hitch Linkage, (Up to S/N 204147) 161
Ball Valve Assembly, Front Mount 3PL, (Up to S/N 204147). 162
DM Valve & Swivel Assy, Lower, Front Mount 3PL, (From S/N 204148) 163
DM Valve & Swivel Assy, Upper, Front Mount 3PL, (From S/N 204148) 164
Hose Routing Bracket Assembly, Front Mount 3PL 165
Hose Mounting Bracket Assembly, Front Mount 3PL 166
Mounting Mechanism, Front Mount 3PL 167
Hydraulic Cylinder Assembly, Lift, LH, Front Mount 3PL. 168
Hydraulic Cylinder Assembly, Lift, RH, Front Mount 3PL 169
Hydraulic Hose Clamps, Front Mount 3PL 170
Accumulator Assembly, Front Mount 3PL 171

07 - Side Modules & Controls 173

LH Pod 174
Decals, Fill, LH Pod 175
Inlet & Air Feed Mounting, LH Pod 176
Chemical Pump, Air Feed Valve Assembly, LH Pod 177
Fill, Micromatic & Chemical Pump Selector Valve Mounting, LH Pod 178
Selector Valve Assembly, Chemical Pump, LH Pod 179
Fill, 3" Manual Fill Manifold Assembly & Mounting, LH Pod. 180
Chemical Pump & Wash Down Gun Pump Mounting, LH Pod. 181
Chemical Pump Assembly, Graco 182
Wash Down Pump Assembly. 183
Chemical Pump Plumbing, LH Pod 184
Chemical Pump Plumbing, LH Pod 185
RH Pod, (Non-Hawkeye) 186
Spray Pump & Suction Filter Mounting, RH Pod, (Non-Hawkeye) 187
Spray Pump Assembly, Centrifugal, ACE 650 Series, RH Pod 188
Suction Filter Assembly, Spray Pump, RH Pod 189
Control Valve, Mounting, RH Pod, (Non-Hawkeye). 190
Control Valve Assembly, Hopper Bypass, RH Pod 191
Control Valve, Plumbing Standard, No Front Mount Tank, RH Pod. 192
Control Valve Assembly, Plumbing Standard, No Front Mount Tank, RH Pod193
Control Valve, Standard Plumbing & Plumbing Plus, RH Pod. 194
Control Valve Assembly, Standard Plumbing & Plumbing Plus, RH Pod 195
Control Valve Assy, Standard Plumbing & Plumbing Plus, RH Pod. 196
Control Valve Assembly, Standard Plumbing & Plumbing Plus, RH Pod . . . 197

Control Valve, Dual Line, RH Pod. 198
Control Valve Assembly, Dual Line, RH Pod. 199
Control Valve Assembly, Dual Line, RH Pod. 200
Control Valve Assembly, Dual Line, RH Pod. 201
Standard, Pressure Filter Mounting, RH Pod 202
Pressure Filter Assembly, RH Pod 203
Plumbing Lines & Hose Clamps, RH Pod 204
Plumbing Lines & Hose Clamps, RH Pod 205
Plumbing Lines & Hose Clamps, RH Pod 206
Module Harness Mount, RH Pod. 207
Decals, Front View, RH Pod. 208
Decals, Plumbing Standard, Plumbing Plus, No Front Mount, RH Pod. 209
Decals, Plumbing Standard, Plumbing Plus & Front Mount, RH Pod 210
Decals, Dual Lines, RH Pod. 211
RH Pod, Hawkeye. 212
Spray Pump & Suction Filter Mounting, RH Pod, Hawkeye 213
Spray Pump Assembly, Centrifugal, ACE 650 Series, RH Pod, Hawkeye. . .214
Suction Filter Assembly, Spray Pump, RH Pod, Hawkeye 215
Control Valve, Mounting, RH Pod, Hawkeye 216
Control Valve, No Front Mount Tank, RH Pod, Hawkeye 217
Control Valve Assembly, No Front Mount Tank, RH Pod, Hawkeye 218
Control Valve, With Front Mount Tank, RH Pod, Hawkeye 219
Control Valve Assembly, With Front Mount Tank, RH Pod, Hawkeye 220
Control Valve Assembly, With Front Mount Tank, RH Pod, Hawkeye 221
Control Valve Assembly, With Front Mount Tank, RH Pod, Hawkeye 222
Control Valve Assembly, Dual Lines, RH Pod, Hawkeye. 223
Control Valve Assembly, Dual Lines, RH Pod, Hawkeye. 224
Control Valve Assembly, Dual Lines, RH Pod, Hawkeye. 225
Control Valve Assembly, Dual Lines, RH Pod, Hawkeye. 226
Control Valve Fitting Assembly, Hopper, RH Pod, Hawkeye 227
Pressure Filter Mounting & Control Valve Assembly, RH Pod, Hawkeye 228
Pressure Filter Assembly, RH Pod, Hawkeye 229
Plumbing Lines & Hose Clamps, RH Pod, Hawkeye 230
Plumbing Lines & Hose Clamps, RH Pod, Hawkeye 231
Plumbing Lines & Hose Clamps, RH Pod, Hawkeye 232
Module Harness Mount, RH Pod, Hawkeye. 233
Decals, Front View, RH Pod, Hawkeye 234
Decals, Plumbing Standard, Plumbing Plus, No Front Mount, RH Pod. 235
Decals, Plumbing Standard, Plumbing Plus & Front Mount, RH Pod 236
Decals, Dual Lines, RH Pod, Hawkeye 237

08 - Plumbing 239

Flow Meter Manifold Assembly 240
Flow Meter Assembly 241
Chemical Suction Probe 242
Micromatic Probe Assembly 243
Arag, 319 Series, Suction Filter 244
Arag, 330 Series, Pressure Filter 245
Fenceline Nozzle Body Assembly, LH, Manual Operated, 1” 246
Fenceline Nozzle Body Assembly, RH, Manual Operated, 1” 247
Nozzle Body, 1”, Teejet Single Body. 248
Nozzle Body Assembly - Teejet Clock Face Body 249
Nozzle Body Assembly - Stackable, Teejet Clock Face Body. 250
Nozzle Body Assembly, Altek Dual Spray Body 251
Altek Spray Stop Assembly, 4mm 252
Altek Spray Stop Assembly, 6mm 253
Nozzles, Altek Spray Stop, 6mm in 4mm Out 254
Nozzles, Direct Control, Dual, Altek 255
Nozzles, Direct Control, Dual Assembly 256
Boom Plumbing, 24 Section, 36mt, 250mm Spacing, RIVX. 257
Boom Plumbing, 36mt, 250mm Spacing, Dual Line, RIVX 258
Boom Plumbing, 24 Section, 42mt, 250mm Spacing, RIVX. 259

GA7500229 259

UNDER DEVELOPMENT 259

Boom Plumbing, 24 Section, 42mt, 250mm Spacing, Dual Line, RIVX. 260

GA7500233 260

UNDER DEVELOPMENT 260

Boom Plumbing, 24 Section, 48mt, 250mm Spacing 261
Boom Plumbing, 48mt, 250mm Spacing, Dual Lines. 262
Boom, Recirculation Poly's, 36mt - 42mt. 263

09 - Decals 265

Decal Kit, Base, G8 Crop Cruiser, Series 3, GA8702384 (Continue Over Page)266
Decal Kit, Base, G8 Crop Cruiser, Series 3, GA8702384 (Continue Over Page)267
Decal Kit, Base, G8 Crop Cruiser, Series 3, GA8702384 (Continue Over Page)268
Decal Kit, Booms, G8 Crop Cruiser, Series 3, GA8702385 269
Decal Kit, Centre Section, G8 Crop Cruiser, Series 3, GA8702386 270
Decal Kit, Fill Station, G8 Crop Cruiser, Series 3, GA8702387 271

10 - Electrical 272

Electrical Power Distribution Assembly 273
Light Bar, Bonnet. 274
Light, LED, Flood, Ultra Beam S Series 275
Light, LED, Spot, Ultra Beam S Series. 276
Light, LED, Red Beam Light, Tip Indicator 277
Beacon, LED 278
Tail Light Assembly, LH, LED 279
Tail Light Assembly, RH, LED 280
I/O Modules. 281
Keypad, CAN, 8 Button. 282
ISO, Electrical Connectors. 283
Raven, RCM & XRT Plugs 284
Raven, AMP Plugs. 285
Raven, AMP & Superseal 286
Receptical Carriages, AMP-MCP. 287
Electrical Connector, JPT-TE 288
Electrical Connectors, Weather Pack. 289
Electrical Connector, Deutsch 290
Electrical Connector, Deutsch, Parts List 291
Electrical Connector, Deutsch, DT-DTM 292
Electrical Connector, Deutsch, Bus Bars 293
Electrical Connectors, Deutsch 294
Electrical Connectors, Deutsch 295
Electrical Connectors, Deutsch 296

11 - Hydraulic & Pneumatics 297

Hydraulic Reservoir 298
Base Plumbing & Service Indicator, Hydraulic Reservoir. 299
Gauge & Gauge Light Mounting, Hydraulic Reservoir. 300
Power Distribution Mounting, Hydraulic Reservoir 301
Expansion Tank, Fuel Filter & Battery Tray Mounting, Hydraulic Reservoir. . .302
Battery Tray Assembly, Hydraulic Reservoir 303
Decals, Hydraulic Reservoir 304
Tank Breather & Return Filter, Hydraulic Reservoir 305
Return Filter Assembly, Hydac 306
Frame, Hydraulic Reservoir 307
Gauge Assembly, Hydraulic Reservoir 308
Gauge Plate & Tank Mounting, Hydraulic Reservoir 309

Hydraulic Manifold Assembly, Chassis Control 310
Hydraulic Manifold Assembly, Chassis Control, Function Table. 311
Hydraulic Pressure Filter 312
Hydraulic Manifold Assembly, Boom Control, Front View LH Side 313
Hydraulic Manifold Assembly, Boom Control, Front View RH Side 314
Hydraulic Manifold Assembly, Boom Control, Function Table 315
Hydraulic Manifold Assembly, 48mt, Third Stage Fold 316
Hydraulic Manifold Assembly, 48mt, Third Stage Fold, Function Table 317
Hydraulic Manifold, Front Mount 3PL. 318
Hydraulic Manifold, Function Table, Front mount 3PL. 319
Hydraulic Manifold, Fan, Combination Cooler 320
Hydraulic Cylinder, Lift 321
Hydraulic Cylinder, Yaw 322
Hydraulic Cylinder, Tilt, 36mt - 42mt 323
Hydraulic Cylinder, Tilt, 48mt 324
Cylinder, Cushion, 48mt, Fold, Flange Base Mount 325
Hydraulic Cylinder, Fold, 36mt - 48mt, Flange Base Mount 326
Hydraulic Cylinder, Centre Level. 327
Hydraulic Cylinder, Bi-Fold, RIVX 328
Hydraulic Cylinder, 3rd Stage Fold, 48mt 329
Hydraulic Cylinder, Breakaway. 330
Hydraulic Cylinder, Boom Catch 331

12 - Boom Centre 333

Centre Section. 334
Paralift Arms 335
Hydraulic Cylinder Assembly, Lift 336
Paralift Rear. 337
Delta Link, Long, Mounting 338
Delta Link, Long 339
Delta Link, Short, Mounting 340
Delta Link, Short 341
Hydraulic Yaw Mounting 342
Roll Shockers 343
Boom Mount Hinge Bracket 344
RH Boom Mount Hinge 345
LH Boom Mount Hinge 346
Tilt & Fold Cylinder Mounting 347
Hydraulic Cylinder Assembly, Fold, 36mt - 42mt 348
Hydraulic Cylinder Assembly, Fold, 48mt 349
Hydraulic Centre Leveling 350
Hydraulic Boom Manifold, Mounting, Centre Section 351
Boom Centre Level, Chain Assembly & Mounting Clamps 352
Rate Control, Rear Camera & Working Light Mounting. 353
Air Pressure Regulator 354
Raven XRT, Tilt Sensors. 355
Lower Limit Switch Assembly 356
Warning Decals, Boom Centre. 357
Boom Mounting, Tilt Arm & Boom Hinge 358
Spray Bar Mounting, Boom Centre, RIVX. 359
Nozzle Guard, Bracket Assembly, Centre, LH 360
Nozzle Guard, Bracket Assembly, Centre, RH 361
Spray Bar Mounting, Centre Section, 48mt 362
Centre Section, I/O Module Mounting 363
I/O Module Assembly 364
Manifold Cover, Boom Centre 365
Oversize Sign, Mounting 366
Oversize Sign Assembly 367

13 - Boom Wings 368

Boom Wings, RIVX 369
Breakaways, RIVX 370

Bi-Fold, LH, Linkage, Ram Mount Assembly, RIVX. 371
Bi-Fold, RH, Linkage, Ram Mount Assembly, RIVX 372
Bi-Fold, LH, Linkage Sensor Assembly, RIVX. 373
Bi-Fold, RH, Linkage Sensor Assembly, RIVX. 374
Bi-Fold, LH, Boom Catch & Boom Slide Protectors, RIVX 375
Bi-Fold, RH, Boom Catch & Boom Slide Protectors, RIVX 376
Boom, Bi-fold Catch Assy, Dual Rubber, RIVX 377
Boom Rest, RIVX Roller, Weedetect & N.I.R. 378
Boom Rest, RIVX Roller, Weedetect N.I.R 379
Boom Wing, LH Inner, Hydraulic Tube & Recirculation Mounting, RIVX. 380
Boom Wing, RH Inner, Hydraulic Tube & Recirculation Mounting, RIVX 381
Boom Wing, LH Inner, Nudge Bar & Boom Poly Mounting, RIVX 382
Boom Wing, RH Inner, Nudge Bar & Boom Poly Mounting, RIVX. 383
Boom Wing, LH, Aluminium Outer Mounting, RIVX 384
Boom Wing, RH, Aluminium Outer Mounting, RIVX 385
Boom Wing, LH, Recirculation Poly Mounting, Aluminium Outer, RIVX. 386
Boom Wing, RH, Recirculation Poly Mounting, Aluminium Outer, RIVX. 387
Boom Wing, LH, Plumbing Line Mounting, Single & Dual Line, RIVX 388
Boom Wing, RH, Plumbing Line Mounting, Single & Dual Line, RIVX 389
Boom Wing, LH Outer, XRT Sensor & Nozzle Guard Bracket Mounting, RIVX390
Boom Wing, Outer, XRT Sensor & Nudge Bar Bracket Mounting, RIVX 391
Breakaway, Mounting Assembly, LH, RIVX. 392
Breakaway, Mounting Assembly, RH, RIVX, ...393
Breakaway, LH, Poly Mounting, Single & Dual Line, RIVX. 394
Breakaway, RH, Poly Mounting, Single & Dual Line, RIVX 395
Breakaway, LH Light Mounting, RIVX. 396
Breakaway, RH Light Mounting, RIVX 397
Breakaway, LH, Decals, RIVX 398
Breakaway, RH, Decals, RIVX 399
Boom Wing, LH, Inner, Bump Stop, RIVX 400
Boom Wing, LH, Inner, Bump Stop, RIVX 401
Bracket, Nozzle Guard, RIVX Boom, Inner Wing, Lower. 402
Bracket, Nozzle Guard, RIVX Boom, Inner Wing, Top 403
Bracket, Nozzle Guard, RIVX Boom, Outer Wing 404
Boom Wings, 48mt, ...405
Inner Mounting Hardware, LH, 48mt 406
Inner Mounting Hardware, RH, 48mt 407
Boom Catch, LH 48mt 408
Boom Catch, RH, 48mt. 409
Boom Protectors, LH, 48mt. 410
Boom Protectors, RH, 48mt 411
Boom Catch Arm Assembly, 48mt. 412
Second Stage Fold, LH, 48mt 413
Second Stage Fold, RH, 48mt. 414
Latch Assembly, Second Stage Fold, LH, 48mt. 415
Latch Assembly, Second Stage Fold, RH, 48mt. 416
Rose Ends & Boom Stops, Second Stage Fold, LH, 48mt. 417
Rose Ends & Boom Stops, Second Stage Fold, RH, 48mt 418
Rose End Assembly, Forged, Top 419
Rose End Assembly, Forged, Bottom 420
Nozzle Brackets, Inner, LH, 48mt. 421
Nozzle Brackets, Inner, RH, 48mt 422
Recirculation Plumbing Bracketry, Inner, LH, 48mt. 423
Recirculation Plumbing Bracketry, Inner, RH, 48mt 424
Nozzle Brackets, LH, Mid, 48mt 425
Nozzle Brackets, RH, Mid, 48mt 426
Recirculation Line & Nozzle Body Mounting, LH, Mid, 48mt. 427
Recirculation Line & Nozzle Body Mounting, RH, Mid, 48mt 428
Third Stage Fold, Rose Ends, LH, 48mt. 429
Third Stage Fold, Rose Ends, RH, 48mt 430
3rd Stage Fold, LH, 48mt 431
3rd Stage Fold, RH, 48mt 432
Boom Link Assembly, 48mt 433
Support Bracket & Boom Stopper, LH, 48mt. 434

Support Bracket & Boom Stopper, RH, 48mt 435
Third Stage Fold, Rose End Linkage, LH, 48mt 436
Third Stage Fold, Rose End Linkage, RH, 48mt 437
Hydraulic Cylinder Mounting, Third Stage Fold, LH, 48mt 438
Hydraulic Cylinder Mounting, Third Stage Fold, RH, 48mt 439
Nozzle Bracket Extensions & Clearance Light, LH, 48mt 440
Nozzle Bracket Extensions & Clearance Light, RH, 48mt 441
Nozzle Brackets, Outer Wing & Breakaway, LH, 48mt 442
Nozzle Brackets, Outer Wing & Breakaway, RH, 48mt 443
Chain Assembly, Breakaway, LH, 48mt 444
Chain Assembly, Breakaway, RH, 48mt 445
Pivot Assembly, Breakaway, LH, 48mt 446
Pivot Assembly, Breakaway, RH, 48mt 447
Boom End Protector, LH, 48mt 448
Boom End Protector, RH, 48mt 449

14 - Wheels, Axles & Mudguards 450

Rim & Tyre Options 451
Mudguards, Axle Mount, Front, 4WD, 480-80R50 Tyre 452
Mudguards, Axle Mount, Front, 4WD, 580-85R42 453
Mudguards, Axle Mount, Rear, 4WD, 480-80R50 Tyre 454
Mudguards, Axle Mount, Rear, 4WD, 580-85R42 455
Crop Dividers - Front Axle, 4WD 456
Crop Dividers - Rear Axle, 4WD 457
Nose Cone Assembly, Crop Divider 458
Nose Cone Frame Assembly, Crop Divider 459

15 - Induction Hopper 460

Induction Hopper Mounting Assembly 461
Tank Assembly, Induction Hopper 462
Drum Rinse Nozzle Assembly 463
Lid Assembly, Induction Hopper 464
Bottom & Lid Hinges, Induction Hopper 465
Ball Valve Assembly, Induction Hopper Bottom 466
Wash Down Gun Assembly 467

16 - Bonnet 469

Bonnet, Series 3 470
Latching Assembly and Handle, Bonnet 471
Latching Assembly, Hydraulic Reservoir, Bonnet 472
Strut Mounting, Bonnet 473
Mounting Brackets, Bonnet 474
D-Handle Mounting, Bonnet 475
Latch Stop Bracket, Bonnet 476
Heat Shield, Bonnet 477
Headlight Assembly, Mounting, Bonnet 478
Headlight Bracket Assembly, Bonnet 479
Indicators, Bonnet 480
Light Bar, Mounting, Bonnet 481

17 - Engine & Transmission 483

Sump Drain Plug, Engine 484
Thermostat Housing Elbow & Hosing, Engine 485
Water Jacket Assembly & Air Cleaner Mounting Bracket, Engine 486
Heater Supply Valve & Compressor Outlet, Engine 487
Compressor Intake & Hydraulic Pump, Engine 488
A/C Air Compressor, Engine 489
Alternator & Engine Pulley Hardware, 12V - 24V Auxiliary, Engine 490
Air Cleaner & Intake Assembly, Engine 491
Transmission Mounting, Engine 492
Ride Height Valve Mounting, Engine 493
Hydraulic Pump & PTO Mounting, Engine 494

Turbo Header Exhaust, Engine 495
Exhaust Pipe Mounting 496
Exhaust System. 497
Combination Cooler, Assembly 498
Combination Cooler, Hoses 499

18 - Driveline 501

Front Axle to Chassis Mounting, 4WD 502
Torque Rods & Shock Absorbers, Front Axle, 4WD 503
Rear Axle to Chassis Mounting, 4WD 504
Rear Axle Assembly, 4WD 505
Torque Rod 506
Sway Bar Link Assembly 507
Towbar, Rear Reverse Camera & Light Mounting 508
Towbar, Rear Reverse Camera & Light Assembly. 509
Rear Reverse Camera, Light & Trailer Socket Mounting Bracket Assembly .510
Drive Shafts, Gearbox to Transfer Case, Chassis Mount 511
Drive Shaft, Rear of Transfer Case & Front Differential 512
Drive Shaft, Front of Transfer Case & Rear Differential 513
Drive Shaft, Driveline Assembly 514
Drive Shaft, Transfer Case to Centre Bearing 515
Drive Shaft, Transmission to Centre Bearing 516
Drive Shaft, Transfer Case to Axle 517
Transfer Case, Mounting Brackets 518
Transfer Case, Fill and Drain Plugs. 519
Transfer Case, Dromos, Upper Drive Assembly 520
Transfer Case, Dromos, Upper Drive Assembly, Parts List 521
Transfer Case, Differential Assembly 522
Transfer Case, Differential Assembly, Parts List 523
Transfer Case, Dromos, Disengagement Casing Assembly 524
Transfer Case, Dromos, Disengagement Casing Assembly, Parts List 525
Differential Centre Assembly, Front, 4WD, Parts Breakdown 526
Differential Centre Assembly, Front, 4WD, Parts List 527
Differential Axle Assembly, 4WD, Front, Parts Breakdown 528
Differential Axle Assembly, 4WD, Front, Parts List 529
Axle, Airbag Bracket Mounting, 4WD, Front. 530
Drive Shaft Assembly, Axle, Front 4WD 531
Drop Leg, Upper Drive Assembly, Front 4WD 532
Drop Leg, Upper Drive Assembly, Front 4WD, Parts List 533
Drop Leg, Lower Drive Assembly, Front 4WD 534
Drop Leg, Lower Drive Assembly, Front 4WD, Parts List 535
Steering Assembly, Axle, Front 4WD 536
Differential Centre Assembly, Rear, 4WD, Parts Breakdown 537
Differential Centre Assembly, Rear, 4WD, Parts List 538
Differential Axle Assembly, 4WD, Rear, Parts Breakdown 539
Differential Axle Assembly, 4WD, Rear, Parts List 540
Axle, Airbag Bracket Mounting, 4WD, Rear 541
Drive Shaft Assembly, Axle, Rear 4WD. 542
Drop Leg, Upper Drive Assembly, Rear 4WD 543
Drop Leg, Upper Drive Assembly, Rear 4WD, Parts List. 544
Drop Leg, Lower Drive Assembly, Rear 4WD 545
Drop Leg, Lower Drive Assembly, Rear 4WD, Parts List. 546

19 - Cabin 548

Cabin, Claas X11 Series 549
RH Mirror & Hand Rails 550
Cabin Glasses 551
Wiper Motor Assembly 552
LH Access Door 553
Locking Lever, RH Glass 554
RH Front Pillar, Cabin. 555
RH Rear Pillar, Cabin 556

PLC & Cable Inlet Plate Mounting, Cabin, ...557
PLC Assembly. 558
Rear Cable Entry Plates, Assembly 559
Roof Assembly, External 560
Side Console Controls. 561
Ghub Display, Mounting Assembly. 562
Bilberry Power Board, Mounting, Cabin. 563
Bilberry Power Board Assembly, Cabin 564
Steering Column Assembly 565
Steering Orbital Assembly 566
Foot Rest Assembly, Cabin 567
Rear Wall, Outside, Cabin 568
Under Floor, Cabin 569
Pedal Assembly. 570
Brake Unit, Foot Valve Assembly, Air Actuated. 571
Seat, Claas, X11, Parts Breakdown. 572
Seat, Claas, X11, Parts List 573

20 - N.I.R Weedetect 575

N.I.R, Sensor & Poly Centre Mount, Centre Section. 576
N.I.R Sensor & Poly Centre Mount Assembly, Centre Section 577
N.I.R, Mechanical Pneumatic Switch Assembly, Centre Section. 578

21 - Bilberry 580

Bilberry Module, Ethernet Switch & PLC Mounting. 581
Front Camera Mounting Arm, Bilberry, LH 582
Front Camera Mounting Arm, Bilberry, RH 583
Post Mount Assembly, Front Camera, 36mt-48mt, Bilberry 584
Front Camera Assembly, Vibration Insulated, Bilberry. 585
Bilberry, Camera Positioning, LH, 36mt 586
Bilberry, Camera Positioning, RH, 36mt 587
Bilberry Cameras, CALC Module Mounting, LH Boom Wing, 36mt 588
Bilberry Cameras, CALC Module Mounting, RH Boom Wing, 36mt 589
Bilberry Cameras, CALC Module Mounting, RH Boom Wing, 42mt 590
Bilberry, Camera Positioning, LH, 42mt 591
Camera Post Assembly, Bilberry, (Camera 3 & 4, 36mt-42mt) 592
Camera Post Assembly, Bilberry, (Camera 5 & 6, 36mt-42mt) 593
Camera Post Assembly, Bilberry, LH (Camera 7, 36mt) 594
Camera Post Assembly, Bilberry, RH (Camera 8, 36mt) 595
Camera Post Assembly, Bilberry, (Camera 7 & 8, 42mt). 596
Camera Post Assembly, Bilberry, LH, (Camera 9, 36mt-42mt) 597
Camera Post Assembly, Bilberry, RH, (Camera 10, 36mt-42mt). 598
Camera Post Assembly, Bilberry, LH, (Camera 11, 36mt-42mt) 599
Camera Post Assembly, Bilberry, RH, (Camera 12, 36mt-42mt). 600
Camera Post Assembly, Bilberry, LH, (Camera 13, 42mt). 601
Camera Post Assembly, Bilberry, RH, (CAM 14, 42mt). 602
Camera Mount Assembly, Boom, 36mt-48mt, Bilberry 603
Lower Post Assembly, Folding, 250mm, Bilberry 604
Outer Camera Mount, Bilberry 605
Camera Positioning, LH, 48mt, Bilberry 606
Camera Positioning, RH, 48mt, Bilberry. 607
Bilberry Cameras, CALC Module Mounting, LH Boom Wing, 48mt 608
Bilberry Cameras, CALC Module Mounting, RH Boom Wing, 48mt 609
CR2050 Module Mounting, LH, 48mt, Bilberry. 610
CR2050 Module Mounting, RH, 48mt, Bilberry 611
CR2050 Module Positions, LH, 48mt, Bilberry. 612
CR2050 Module Positions, RH, 48mt, Bilberry 613
Camera Post Assembly, Bilberry, (Camera 3 & 4, 48mt). 614
Camera Post Assembly, Bilberry, (Camera 5 & 6, 48mt). 615
Camera Post Assembly, Bilberry, (Camera 7 & 8, 48mt). 616
Camera Post Assembly, Bilberry, (Camera 9 & 10, 48mt). 617
Camera Post Assembly, Bilberry, LH, (Camera 11, 48mt). 618

Camera Post Assembly, Bilberry, RH, (Camera 12, 48mt) 619
Camera Post Assembly, Bilberry, LH, (Camera 13, 48mt). 620
Camera Post Assembly, Bilberry, RH, (Camera 14, 48mt) 621
Camera Post Assembly, Bilberry, LH, (Camera 15, 48mt). 622
Camera Post Assembly, Bilberry, RH, (Camera 16, 48mt) 623
Mounting Plate, Bilberry CALC Module 624
Post Length Chart, Bilberry 625

22 - Height Control 626

Height Sensor & Boom Control Module, Centre Section 627
Raven XRT, Expansion Module & Centre Section Rotary Sensor Mounting .628
Raven XRT Boom Sensor Assembly 629

23 - Schematics 631

Hydraulic Schematic, Front Mount tank 632
Hydraulic Schematic, Chassis 633
Hydraulic Schematic, Engine, Pumps, Cooler & Tank. 634
Hydraulic Schematic, Boom 635
Plumbing Schematic, Tank, Front 3pl. 636
Plumbing Schematic, Mains, Chassis 637
Plumbing Schematic, Chassis to Boom. 638
Plumbing Schematic, Hose List 639
Plumbing Schematic, Sprayer Function Table 640
Electrical Schematic, Cabin Layout, Claas X11 641
Electrical Schematic, Cabin Kit 642
Electrical Schematic, Main Cab & Floor Harness 643
Electrical Schematic, Cabin, Main 644
Electrical Schematic, Cabin Roof & Arm Rest 645
Electrical Schematic, Console Switches. 646
Electrical Schematic, Cabin Roof, UHF & Receivers. 647
Electrical Schematic, Centre PLC & RCM 648
Electrical Schematic, Plumbing Pod Module Chart 649
Electrical Schematic, Plumbing Pod, Layout 650
Electrical Schematic, Plumbing Pod, Module ‘A’ 651
Electrical Schematic, Plumbing Pod, Module ‘B’ 652
Electrical Schematic, Plumbing Pod, Module ‘C’ 653
Electrical Schematic, Chassis, Layout, Auto Grease, Tank Fill & Cooler 654
Electrical Schematic, Chassis, Main Tank, Front Mount & Spray Pump 655
Electrical Schematic, Chassis, Main, High Current Layout 656
Electrical Schematic, Chassis, High Power 657
Electrical Schematic, Chassis, Main, Low Current Layout 658
Electrical Schematic, Chassis, Low Power. 659
Electrical Schematic, Chassis, Centre Harness to Boom Manifold 660
Electrical Schematic, Boom, 36mt. 661
Electrical Schematic, Boom, 42mt. 662
Electrical Schematic, Boom Breakout, 48mt 663
Electrical Schematic, Boom, 48mt. 664
Electrical Schematic, Battery Kits 665
Electrical Schematic, Bonnet Lights. 666
Electrical Schematic, Ethernet Layout 667
Electrical Schematic, Ethernet Switch 668
Electrical Schematic, Front Tank - Front Linkage 669
Electrical Schematic, Bilberry Integration 670
Electrical Schematic, Bilberry Cameras 671
Electrical Schematic, Bilberry Lights 672
Electrical Schematic, Hawkeye, 250mm Spacing 673
Electrical Schematic, Individual Nozzle Control (G.I.N.C) 674
Electrical Schematic, CAN Layout 675
Electrical Schematic, CAN Layout, Raven XRT, Bilberry, (G.I.N.C) 676

24 - Sprayer Options 678

Sprayer Options Index 679
Goldacres Terms & Conditions of Sale & Warranty 680

01 - Service & Miscellaneous Parts

Miscellaneous Parts, Nozzles

TEEJET NOZZLES	
PART NUMBER	DESCRIPTION
GA8100267	NOZZLE TIP, XR TEEJET, GREEN 015, POLYMER, XR110015-VP
GA8100272	NOZZLE TIP, XR TEEJET, YELLOW 02, POLYMER, XR11002-VP
GA8100275	NOZZLE TIP, XR TEEJET, BLUE 03, POLYMER, XR11003-VP
GA8100278	NOZZLE TIP, XR TEEJET, RED 04, POLYMER, XR11004-VP
GA8100280	NOZZLE TIP, XR TEEJET, BROWN 05, POLYMER, XR11005-VP
GA8100282	NOZZLE TIP, XR TEEJET, GREY 06, POLYMER, XR11006-VP
GA8100284	NOZZLE TIP, XR TEEJET, WHITE 08, POLYMER, XR11008-VP
GA8100429	NOZZLE TIP, AIXR TEEJET, GREEN 015, POLYMER, AIXR110015VP
GA8100431	NOZZLE TIP, AIXR TEEJET, YELLOW 02, POLYMER., AIXR11002VP
GA8100430	NOZZLE TIP, AIXR TEEJET, VIOLET 025, POLYMER, AIXR110025VP
GA8100432	NOZZLE TIP, AIXR TEEJET, BLUE 03, POLYMER, AIXR11003VP
GA8100433	NOZZLE TIP, AIXR TEEJET, RED 04, POLYMER, AIXR11004-VP
GA8100434	NOZZLE TIP, AIXR TEEJET, BROWN 05, POLYMER, AIXR11005VP
GA8100387	NOZZLE TIP, AI TEEJET, GREEN 015, SS, AI110015-VS
GA8100389	NOZZLE TIP, AI TEEJET, YELLOW 02, SS, AI11002-VS
GA8100388	NOZZLE TIP, AI TEEJET, VIOLET 025, SS, AI110025-VS
GA8100390	NOZZLE TIP, AI TEEJET, BLUE 03, SS, AI11003-VS
GA8100391	NOZZLE TIP, AI TEEJET, RED 04, SS, AI11004-VS
GA8100392	NOZZLE TIP, AI TEEJET, BROWN 05, SS, AI11005-VS
GA8100393	NOZZLE TIP, AI TEEJET, GREY 06, SS, AI11006-VS
GA8100394	NOZZLE TIP, AI TEEJET, WHITE 08, SS, AI11008-VS
GA8100225	NOZZLE TIP, TTI TEEJET, GREEN 015, POLYMER, TTI110015-VP
GA8100227	NOZZLE TIP, TTI TEEJET, YELLOW 02, POLYMER, TTI11002-VP
GA8100226	NOZZLE TIP, TTI TEEJET, VIOLET 025, POLYMER, TTI110025-VP
GA8100228	NOZZLE TIP, TTI TEEJET, BLUE 03, POLYMER, TTI11003-VP
GA8100229	NOZZLE TIP, TTI TEEJET, RED 04, POLYMER, TTI11004-VP
GA8100230	NOZZLE TIP, TTI TEEJET, BROWN 05, POLYMER, TTI11005-VP
GA8100693	NOZZLE TIP, TP4003E-SS, STAINLESS STEEL 03, 40 DEGREE, TEEJET
GA8100699	NOZZLE TIP, TP4004E-SS, STAINLESS STEEL 04, 40 DEGREE, TEEJET
GA8100703	NOZZLE TIP, CFLD-XC4003, COMPACT FAN LOW DRIFT, BLUE, ARAG
GA8100704	NOZZLE TIP, CFLD-XC4004, COMPACT FAN LOW DRIFT, RED, ARAG

LECHLER NOZZLES	
PART NUMBER	DESCRIPTION
GA8100000	NOZZLE TIP, AIR INJECTOR ID3 120-01, ORANGE, POLYMER, LECHLER
GA8100001	NOZZLE TIP, AIR INJECTOR ID3 120-015, GREEN, POLYMER, LECHLER
GA8100002	NOZZLE TIP, AIR INJECTOR ID3 120-02, YELLOW, POLYMER, LECHLER
GA8100003	NOZZLE TIP, AIR INJECTOR ID3 120-025, PURPLE, POLYMER, LECHLER
GA8100004	NOZZLE TIP, AIR INJECTOR ID3 120-03, BLUE, POLYMER, LECHLER
GA8100005	NOZZLE TIP, AIR INJECTOR ID3 120-04, RED, POLYMER, LECHLER
GA8100006	NOZZLE TIP, AIR INJECTOR ID3 120-05, BROWN, POLYMER, LECHLER
GA8100007	NOZZLE TIP, AIR INJECTOR ID3 120-06, GREY, POLYMER, LECHLER
GA8100008	NOZZLE TIP, AIR INJECTOR ID3 120-08, WHITE, POLYMER, LECHLER
GA8100018	NOZZLE TIP, AIR INJECTOR COMPACT IDK 120-01, ORANGE, POLYMER, LECHLER
GA8100019	NOZZLE TIP, AIR INJECTOR COMPACT IDK 120-015, GREEN, POLYMER, LECHLER
GA8100020	NOZZLE TIP, AIR INJECTOR COMPACT IDK 120-02, YELLOW, POLYMER, LECHLER
GA8100021	NOZZLE TIP, AIR INJECTOR COMPACT IDK 120-025, PURPLE, POLYMER, LECHLER
GA8100022	NOZZLE TIP, AIR INJECTOR COMPACT IDK 120-03, BLUE, POLYMER, LECHLER
GA8100023	NOZZLE TIP, AIR INJECTOR COMPACT IDK 120-04, RED, POLYMER, LECHLER
GA8100024	NOZZLE TIP, AIR INJECTOR COMPACT IDK 120-05, BROWN, POLYMER, LECHLER
GA8100025	NOZZLE TIP, AIR INJECTOR COMPACT IDK 120-06, GREY, POLYMER, LECHLER
GA8100026	NOZZLE TIP, AIR INJECTOR COMPACT IDK 120-08, WHITE, POLYMER, LECHLER
FILTERS	
GA5076947	CHECK VALVE, 5PSI, FILTER, NOZZLE TIP, 50 MESH SCREEN, TEEJET, 4193B-PP-5-50SS
GA5077158	FILTER, NOZZLE TIP, 24 MESH, POLYPROPYLENE, SS, TEEJET, 8079-PP-24
GA5077159	FILTER, NOZZLE TIP, 50 MESH, POLYPROPYLENE, SS, TEEJET, 8079-PP-50
GA5077160	FILTER, NOZZLE TIP, 80 MESH, POLYPROPYLENE, SS, TEEJET, 8079-PP-80
GA5077156	FILTER, NOZZLE TIP, 100 MESH, POLYPROPYLENE, SS, TEEJET, 8079-PP-100
GA5077157	FILTER, NOZZLE TIP, 200 MESH, POLYPROPYLENE, SS, TEEJET, 8079-PP-200
CAPS	
GA8100443	NOZZLE CAP, BLACK, TEEJET, SUIT TJ60, AI, AIUB, SJ3, DG TWINJET, TTI, AITTJ60, CP114442-1-CE
GA8100464	NOZZLE CAP, BLACK, TEEJET, SUIT FLAT SPRAY SMALLER CAPACITY NOZZLES (UP TO 08), CP114440-1-CE
GA8100059	NOZZLE CAP, 10mm ACROSS FLATS, BLACK, LECHLER
WASHER	
GA5055245	WASHER, NOZZLE CAP SEAL, RUBBER, 19 OD X 9 ID, SUIT TEE JET NOZZLE, REPLACES CP19438-EPR

Miscellaneous Parts, Hose

PART NUMBER	DESCRIPTION
	SUCTION HOSE
GA2000218	HOSE, SUCTION, WIRE REINFORCED, 20mm, BLACK, HOS20S, SOLD PER METER, 20M IN A ROLL
GA2000222	HOSE, SUCTION, 25mm, WIRE REINFORCED, HOS25S, SOLD PER METER, 20M IN A ROLL
GA2000224	HOSE, SUCTION, 32mm, WIRE REINFORCED, HOS32S, SOLD PER METER, 20M IN A ROLL
GA2000226	HOSE, SUCTION, 38mm, WIRE REINFORCED, HOS38S, SOLD PER METER, 20M IN A ROLL
GA2000229	HOSE, SUCTION, 51mm, WIRE REINFORCED, HOS51S, SOLD PER METER, 20M IN A ROLL
GA2000230	HOSE 63mm SUCTION (WIRE REINFORCED), HOS63S, SOLD PER METER,
GA2000232	HOSE, SUCTION, 75mm, WIRE REINFORCED, HOS75S, SOLD PER METER, 20M IN A ROLL
	NOTE: SUCTION HOSE CAN BE IDENTIFIED BY ITS EXTERNAL GREEN STRIPE AND WIRE REINFORCEMENT.
	PRESSURE HOSE
GA2000200	HOSE, PRESSURE, 7mm, BLACK (250PSI), HOS7P
GA2000211	HOSE, PRESSURE, 12mm, BLACK, 250PSI, HOS13P, SOLD PER METER, ROLL = 250M
GA2000216	HOSE, PRESSURE, 20mm, BLACK 250PSI, HOS20P, SOLD PER METER, ROLL = 100M.
GA2000219	HOSE, PRESSURE, 25mm, BLACK 250PSI, HOS25P, SOLD PER METER, 100M IN A ROLL.
GA2000223	HOSE, PRESSURE, 32mm BLACK (250 PSI), HOS32P, SOLD PER METER, 60M IN A ROLL.
GA2000225	HOSE, PRESSURE, 38mm BLACK (250 PSI), HOS38P, SOLD PER METER, 20M IN A ROLL
	NOTE: PRESSURE HOSE CAN BE IDENTIFIED BY ITS BLUE INTERNAL LAYER.
	PVC HOSE
GA2000220	HOSE, SUCTION, PVC, 25mm, BLACK, HOS25PVC, SOLD PER METER, 30M IN A ROLL.
GA2000227	HOSE, SUCTION, PVC, 40mm, BLACK, HOS40PVC, SOLD PER METER, 20M IN A ROLL
GA2000228	HOSE, PVC, 50mm, BLACK, HOS50PVC, SOLD PER METER, 20M IN A ROLL
GA2000231	HOSE, SUCTION, PVC, 75mm, BLACK, HOS75PVC, SOLD PER METER
	NOTE: PVC HOSE CAN BE IDENTIFIED BY ITS RIBBED OUTER SURFACE.
	SIGHT TUBE HOSE
GA2000209	HOSE, CLEAR, 12mm, SIGHT TUBE, HOS12SIGHT, SOLD PER METER, ROLL = 20M
GA2000210	HOSE, 12mm, CLEAR, WIRE REINFORCED, HOS12WSIGHT, SOLD PER METER, ROLL = 20M

PART NUMBER	DESCRIPTION
	LAY FLAT HOSE
GA2000220	HOSE, SUCTION, PVC, 25mm, BLACK, HOS25PVC, SOLD PER METER, 30M IN A ROLL.
	HOSE CLAMPS
GA5004865	HOSE CLAMP, 3/8,SS (8-16/9W)
GA5000469	HOSE CLAMP, 1/2" SS 12-20/9W3
GA5000999	HOSE CLAMP, 3/4" SS (16-27/12W)
GA5001681	HOSE CLAMP, 1" SS (20-32/12W)
GA5016813	HOSE CLAMP, 1 SS LARGE (25-40/12W)
GA5002783	HOSE CLAMP, 1 1/4, SS (30-45/13W)
GA5002873	HOSE CLAMP, 1 1/2" SS (32-50/12W)
GA5003325	HOSE CLAMP, 2 SS, (40-60/12W)
GA5016815	HOSE CLAMP, 50-70 /12 C7 W4, SS
GA5004241	HOSE CLAMP, 60-80mm, S/S 31/2
	CABLE TIES
GA5002173	CABLE TIE BLACK 100 X 2.5 [C]
GA5003517	CABLE TIE BLACK 140 X 3.5 [C]
GA5004455	CABLE TIES BLACK 190 X 4.5 mm [C]
GA5000685	CABLE TIE BLACK 320 X 7.5mm [C]
GA5000687	CABLE TIE, BLACK, 370X 4.8mm [C] 100PK
GA5021235	CABLE TIE BLACK 540 X 7.5mm [C]
	SPIRAL GUARD
GA5015669	SPIRAL GUARD, 20mm, BLACK
	BRAKE LINE (BUNDY TUBE)
GA5006565	BUNDY TUBE, BRAKE LINE, 1/4 (6m ROLL)
	PNEUMATIC HOSE
GA7000016	HOSE, PNEUMATIC, 3/8", BLACK NYLON, ABT06, AIR BRAKE CORPORATION
GA3500180	HOSE, HI TEMP, MULTIFLUID, 1/4", BLUE,
GA3500181	HOSE, HI TEMP, MULTIFLUID, 1/2", BLUE, RQP18

GA7800002 GOLDACRES	HOSE LIST, PARTS MANUALS	REV 00.B

Miscellaneous, Electrical, Replacement Fuse List

PART NUMBER	DESCRIPTION	PART NUMBER	DESCRIPTION
GA5052515	FUSE MINI BLADE 15 AMP (52715)	GA3000403	FUSE, JCASE, 20A
GA5052510	FUSE MINI BLADE 10 AMP (52710)	GA3000402	FUSE, JCASE, 30A
GA5052520	FUSE MINI BLADE 20 AMP (52720)	GA3000337	FUSE, JCASE, 40A
GA3000471	FUSE, ANS, 100 AMP	GA3000935	FUSE, JCASE, 50A, RED
GA3000336	FUSE, ANS, 150AMP	GA3000936	FUSE, JCASE, 60A, YELLOW
GA3000397	FUSE, ANS, 50AMP, LITTLEFUSE 53806	GA3000425	FUSE, MINI BLADE, 2 AMP, 52702
GA5050820	FUSE, BLADE 30 AMP	GA3000395	FUSE, MINI BLADE, 3 AMP, 52703
GA3001033	FUSE, BLADE, 1 AMP, PWR-ATO-FU-1AZ	GA3000396	FUSE, MINI BLADE, 5 AMP, 52705
GA5011981	FUSE, BLADE, 10 AMP (52810)	GA0100037	FUSE. BLADE, 5 AMP (PACK 50)
GA5012003	FUSE, BLADE, 15 AMP (52815)	GA5049370	NARVA 100 AMP MAXI BLADE FUSE
GA5012005	FUSE, BLADE, 20 AMP	GA5022447	NARVA 20 AMP MAXI BLADE FUSE
GA5055490	FUSE, BLADE, 25 AMP	GA5022448	NARVA 30 AMP MAXI BLADE FUSE
GA3001034	FUSE, BLADE, 4 AMP, PWR-ATO-FU-4AZ	GA5075185	NARVA 40 AMP MAXI BLADE FUSE
GA5075235	FUSE, BLADE, 40 AMP (52840)	GA5049365	NARVA 60 AMP MAXI BLADE FUSE
GA5078879	FUSE, BLADE, 7.5 AMP, (52807)	GA5012039	NARVA 80 AMP MAXI BLADE FUSE
GA5053115	FUSE HOLDER MINI BLADE INLINE		

PART NUMBER	DESCRIPTION
	PAINT & PAINT KITS
GA5078578	PAINT KIT, 2 PACK, 1L, GOLDACRES GREEN, INC TOP COAT AND HARDENER 4:1
GA5078579	PAINT KIT, 2 PACK, 4L, GOLDACRES GREEN, INC TOP COAT AND HARDENER 4:1
GA5078580	PAINT KIT, 2 PACK, 1L, NEUTRAL GREY, INC TOP COAT AND HARDENER 4:1
GA5078581	PAINT KIT, 2 PACK, 4L, NEUTRAL GREY, INC TOP COAT AND HARDENER 4:1
GA5078582	PAINT KIT, 2 PACK, 1L, BLACK, INC TOP COAT AND HARDENER 4:1
GA5078583	PAINT KIT, 2 PACK, 4L, BLACK, INC TOP COAT AND HARDENER 4:1
GA5026738	PAINT, TB510 1L, CLAAS CABIN GREY
GA5078587	PAINT, 2 PACK HARDENER, 1L
GA5026739	PAINT, SPRAY CAN, ENAMEL, TB510 CLAAS CABIN GREY
	CORROSION INHIBITOR
GA5009289	RUST PREVENTATIVE, G15, 400G AEROSOL PACK [C]
GA5009289-12	RUST PREVENTATIVE, G15, 400G BOX OF 12
GA5025345	G15 FERRO PAK, 5L DRUM
GA5025350	G15 FERRO PAK, 20L DRUM
	ELECTRICAL CORROSION INHIBITORS
GA3000494	ELECTRICAL SPRAY, ANTI CORROSION, LUBRICANT, 450G, CRC 2.26
GA0100028	BATTERY TERMINAL PROTECTOR SPRAY, ANTI CORROSION, YELLOW FILM, CRC 5098, 300G, CRC 5098 [C]

Service Kits

PART NUMBER	DESCRIPTION	QTY
GA1100094	SERVICE KIT, G6 & G8 SERIES 3, 50HR	
GA5051755	FILTER, ENGINE OIL, SUIT CUMMINS QSB & B6.7L, LF3970	1
GA2700211	FILTER, FUEL, PRIMARY, CUMMINS B6.7L, FS20121	1
GA2700193	FILTER, FUEL, ELEMENT, SECONDARY, CUMMINS B SERIES, FF63009	1
GA3501940	FILTER, HYDRAULIC RETURN ELEMENT, DEGASSING	1
GA3501114	FILTER ELEMENT, HYDRAULIC PRESSURE FILTER, HYDAC, 1250491	1
GA8700724	DECAL, NEXT SERVICE INDICATOR, SELF PROPELLED	1
GA1100095	SERVICE KIT, G6 & G8 SERIES 3, 500HR	
GA5051755	FILTER, ENGINE OIL, SUIT CUMMINS QSB & B6.7L, LF3970	1
GA2700211	FILTER, FUEL, PRIMARY, CUMMINS B6.7L, FS20121	1
GA2700193	FILTER, FUEL, ELEMENT, SECONDARY, CUMMINS B SERIES, FF63009	1
GA5026395	FILTER, AIR CLEANER ELEMENT, PRIMARY, DONALDSON D100397	1
GA5069032	AIR CLEANER SAFETY ELEMENT, SUIT GA5069030, DONALDSON	1
GA8700724	DECAL SERVICE STICKER	1

PART NUMBER	DESCRIPTION	QTY
GA1100096	SERVICE KIT, G6 & G8 SERIES 3, 1000HR	
GA5051755	FILTER, ENGINE OIL, SUIT CUMMINS QSB & B6.7L, LF3970	1
GA2700211	FILTER, FUEL, PRIMARY, CUMMINS B6.7L, FS20121	1
GA2700193	FILTER, FUEL, ELEMENT, SECONDARY, CUMMINS B SERIES, FF63009	1
GA5026395	FILTER, AIR CLEANER ELEMENT, PRIMARY, DONALDSON D100397	1
GA5069032	AIR CLEANER SAFETY ELEMENT, SUIT GA5069030, DONALDSON	1
GA3501940	FILTER, HYDRAULIC RETURN ELEMENT, DEGASSING	1
GA3501114	FILTER ELEMENT, HYDRAULIC PRESSURE FILTER, PRO S2, HYDAC, 1250491	1
GA5075450	BREATHER FILTER CAP, OIL RESERVOIR FILLER, HYDAC	1
GA7000022	CARTRIDGE, AIR DRYER	1
GA7000021	FILTER/SILENCER, AIR DRYER, WABCO 432.407.012.0	1
GA5025920	FILTER, CARBON ELEMENT, SERIES 3, SUIT X11, CAT4, CLAAS	1
GA5026410	FILTER, INTERNAL AIR ELEMENT, X11 CLAAS	1
GA8700724	DECAL SERVICE STICKER	1

GA7800496 GOLDACRES	SERVICE KITS, CROP CRUISER, G8 SERIES 3	REV 00

Miscellaneous, Greasing

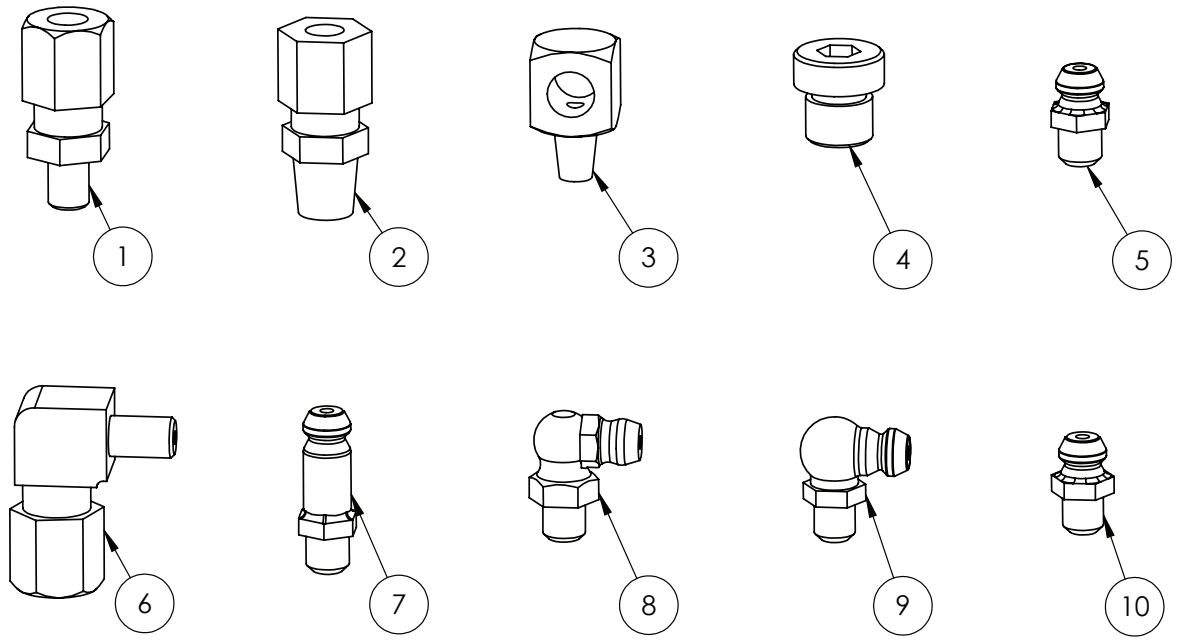

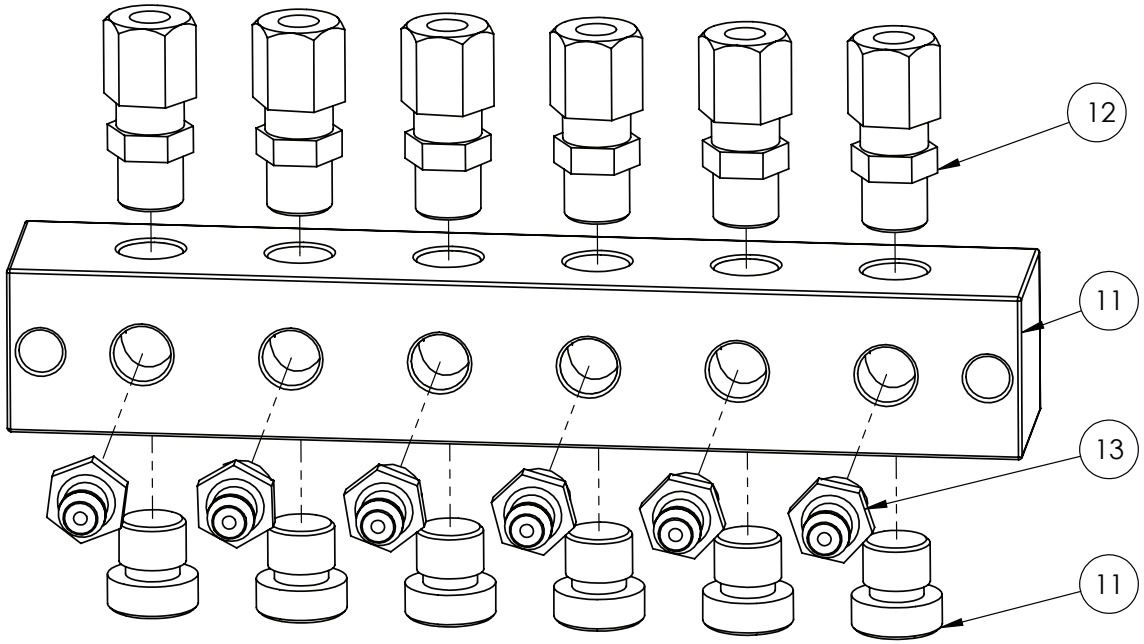

OPTIONAL PARTS			
ITEM	PART NUMBER	DESCRIPTION	QTY
-	GA5070005	GREASE LINE 6mm PRE FILLED (50M/ROLL)	-

IF DESCRIPTION PREFIX IS ASSEMBLY DRAWING ONLY OR PRODUCTION DRAWING ONLY THE ITEM IS NOT FOR SALE			
ITEM	PART NUMBER	DESCRIPTION	QTY
1	GA5069985	GREASE FITTING, LINE CONNECTOR, STRAIGHT 6mm	1
2	GA5071695	COUPLING, MALE STUD, OLIVE TYPE, AUTO GREASER	1
3	GA5071690	ELBOW, M6 X M8 CONNECTOR STUD, AUTO GREASE	1
4	GA5070000-2	PLUG, GREASE HEADER BLOCK	1
5	GA5012203	GREASE NIPPLE, SHORT, 1/4 UNF, MACH0207	1
6	GA5069995	GREASE FITTING, ELBOW 90 DEGREE, LINE CONNECTOR 6mm	1
7	GA5009639	GREASE NIPPLE 1/4" UNF SHORT	1
8	GA5009637	GREASE NIPPLE, ELBOW, 90 DEGREE, 1/4 UNF MALE, MACH02	1
9	GA5051970	GREASE NIPPLE 1/4" UNF LONG	1
10	GA5050450	GREASE NIPPLE, 6mm	1
11	GA5070000	GREASE FITTING HEADER BLOCK 6 WAY, INC. 6mm LINE ADAPTORS AND STRAIGHT GREASE NIPPLES AND PLUGS	1
12	GA5055225	PNEUMATIC FITTING, STRAIGHT ADAPTOR, 1/8 BSP MALE THREAD X NUT RETAINER SUIT 6 mm TUBE	1
13	GA5069980	GREASE NIPPLE, 1/8 BSPP, STRAIGHT	1
GA7800056 GOLDACRES		GREASING, MISCELLANEOUS	REV 00

Miscellaneous, Pneumatic

OPTIONAL PARTS			
ITEM	PART NUMBER	DESCRIPTION	QTY
-	GA5004384	TUBE, NYLON, 4mm, BLACK	-
-	GA5004386	TUBE, NYLON, 4mm, BLUE	-
-	GA5004383	TUBE, NYLON, 6mm, BLACK	-
-	GA5004385	TUBE, NYLON, 6mm, BLUE	-
-	GA7000002	TUBE, NYLON, 6mm, RED	-
-	GA5004382	TUBE, NYLON, 8mm, BLACK	-
-	GA7000016	HOSE, PNEUMATIC, 3/8", BLACK NYLON 150m ROLL, ABT06, AIR BRAKE CORPORATION	

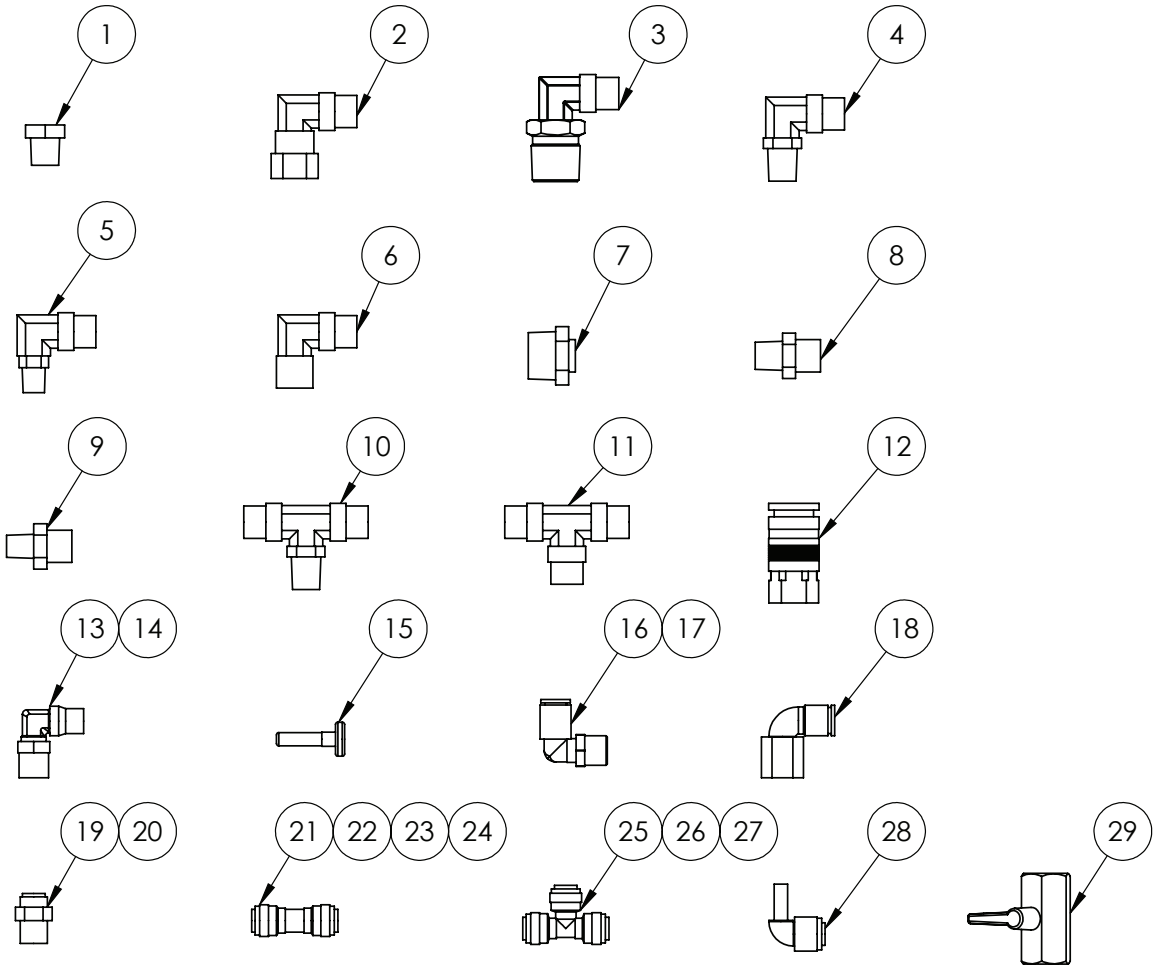

IF DESCRIPTION PREFIX IS ASSEMBLY DRAWING ONLY OR PRODUCTION DRAWING ONLY THE ITEM IS NOT FOR SALE			
ITEM	PART NUMBER	DESCRIPTION	QTY
1	GA5071207	BREATHER, SILENCER, 1/4 BUTTON	1
2	GA5078522	AIR FITTING, ELBOW, SWIVEL 3/8" TUBE, 1/4" NPT FEMALE, PUSH IN, BRASS, ALKON - AQ70-DOTS-6X4	1
3	GA5078524	AIR FITTING, ELBOW, SWIVEL, 3/8" TUBE, 1/2" NPT MALE, PUSH IN, BRASS, ALKON - AQ69-DOTS-6X8	1
4	GA5078518	AIR FITTING, ELBOW, SWIVEL, 3/8" TUBE, 1/4" NPT MALE, PUSH IN, BRASS, ALKON - AQ69-DOTS-6X4	1
5	GA5078525	AIR FITTING, ELBOW, SWIVEL, 3/8" TUBE, 1/8" NPT MALE, PUSH IN, BRASS, ALKON - AQ69-DOTS-6X2	1
6	GA5078519	AIR FITTING, ELBOW, 3/8" TUBE, 1/4" NPT FEMALE, PUSH IN, BRASS, ALKON AQ70-DOT-6X4	1
7	GA5078520	AIR FITTING, STRAIGHT, 3/8" TUBE, 1/2" NPT MALE, BRASS, ALKON - AQ68-DOT-6X8	1
8	GA5078517	AIR FITTING, STRAIGHT, 3/8" TUBE, 1/4" NPT MALE, PUSH IN, BRASS, ALKON - AQ68-DOT-6X4	1
9	GA5078523	AIR FITTING, STRAIGHT, 3/8" TUBE, 1/8" NPT MALE, BRASS, ALKON AQ68-DOT-6X2	1
10	GA5078521	AIR FITTING, TEE, SWIVEL, 3/8" TUBE, 1/4" NPT MALE, PUSH IN, BRASS, ALKON - AQ72-DOTS-6X4	1
11	GA5078516	AIR FITTING, TEE, 3/8" TUBE, PUSH IN, BRASS, ALKON - AQ64-DOT-6	1
12	GA5076620	COUPLING, AIR, 1/4" BSPP FEMALE X FEMALE, BRASS, 200	1
13	GA5016233	PNEUMATIC FITTING, ELBOW, 90 DEGREE, 1/4 BSP MALE X 6mm PUSH IN TYPE, METAL	1
14	GA5052690	PNEUMATIC FITTING, ELBOW, 90 DEGREE, 1/4 BSP MALE X 8mm PUSH TYPE, METAL	1
15	GA5004405	PLUG PUSH IN 6mm	1
16	GA5052690	PNEUMATIC FITTING, ELBOW, 90 DEGREE, 1/4 BSP MALE X 8mm PUSH TYPE, METAL	1
17	GA5078524	AIR FITTING, ELBOW, SWIVEL, 3/8" TUBE, 1/2" NPT MALE, PUSH IN, BRASS, ALKON - AQ69-DOTS-6X8	
18	GA7000015	PNEUMATIC FITTING, FEMALE 1/4" BSPP X 8mm PUSH IN, FEMALE STUD ELBOW	1
19	GA5045140	PNEUMATIC FITTING, NIPPLE, PUSH IN 6mm X 1/4" BSPT, BRASS	1
20	GA5050210	PNEUMATIC FITTING, NIPPLE, 1/8 BSPP MALE X 6mm PUSH IN TYPE	1
21	GA5066991	PNEUMATIC FITTING, PUSH IN, JOINER, 6mm	1
22	GA5078922	PNEUMATIC FITTING, 3/8", PUSH IN, EQUAL JOINER, PLASTIC	1
23	GA5054600	PUSH IN FITTING, REDUCER, STRAIGHT, 6mm TO 4mm	1
24	GA5065175	PUSH IN FITTING, REDUCER, STRAIGHT, 8mm TO 6mm	1
25	GA5016246	TEE, EQUAL, 4mm PUSH IN TYPE, BLACK PLASTIC	1
26	GA5016245	TEE EQUAL PUSH IN 6mm	1
27	GA5067010	TEE, EQUAL, 8mm PUSH IN TYPE, BLACK PLASTIC	1
28	GA5078518	AIR FITTING, ELBOW, SWIVEL, 3/8" TUBE, 1/4" NPT MALE, PUSH IN, BRASS, ALKON - AQ69-DOTS-6X4	1
29	GA5018321	BALL VALVE, 1/4" FEMALE, BLACK LEVER HANDLE, CHROMED	1
GA7800053 GOLDACRES		PNEUMATIC MISCELLANEOUS	REV 00

02 - DFO & Sales Kits

03 - Chassis

Chassis

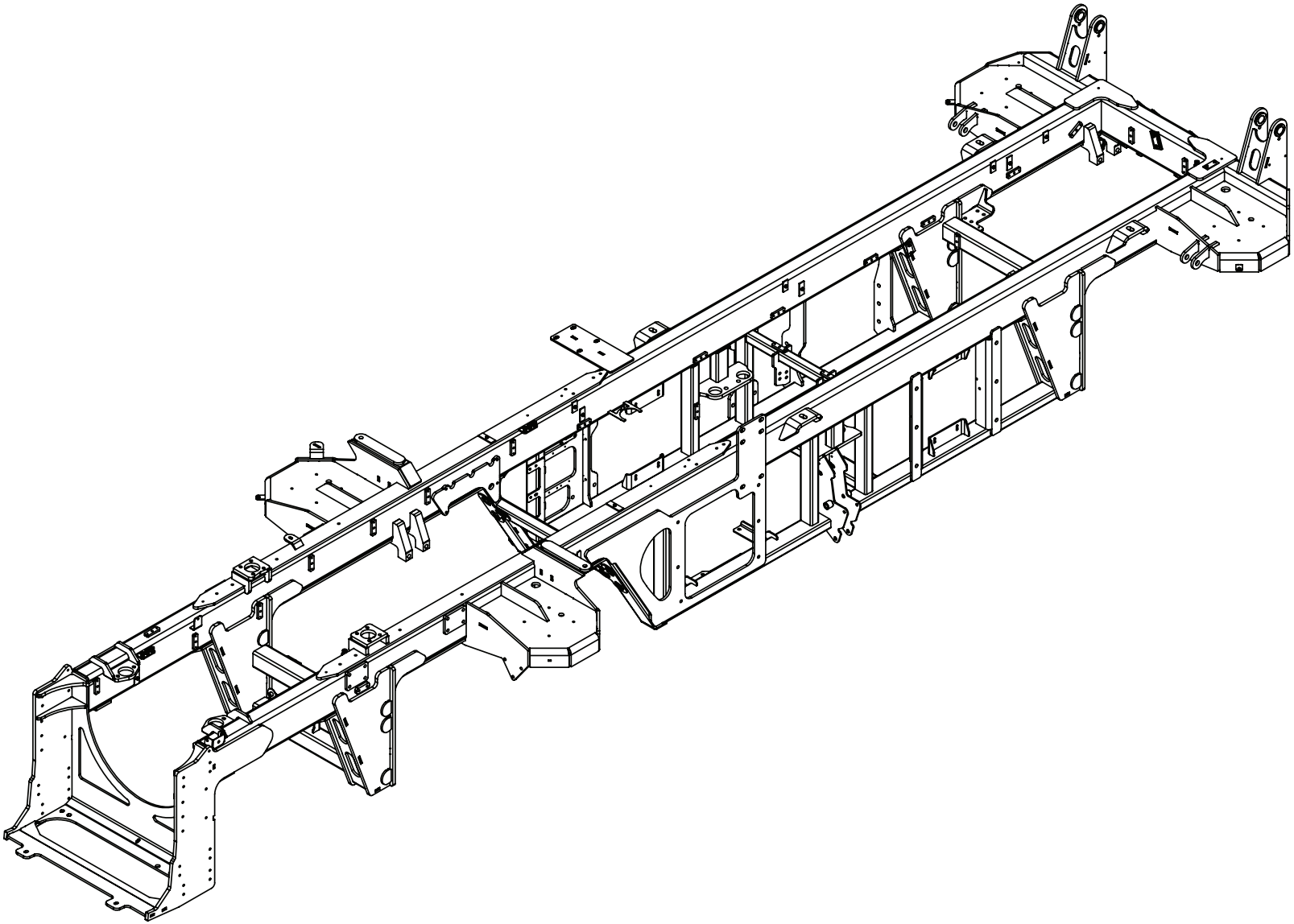

GA4604770	CHASSIS, CROP CRUISER, LARGE FRAME, MY25	REV 00.E
GOLDACRES		

Cable Tray, IO Modules & Flood Light Mounting

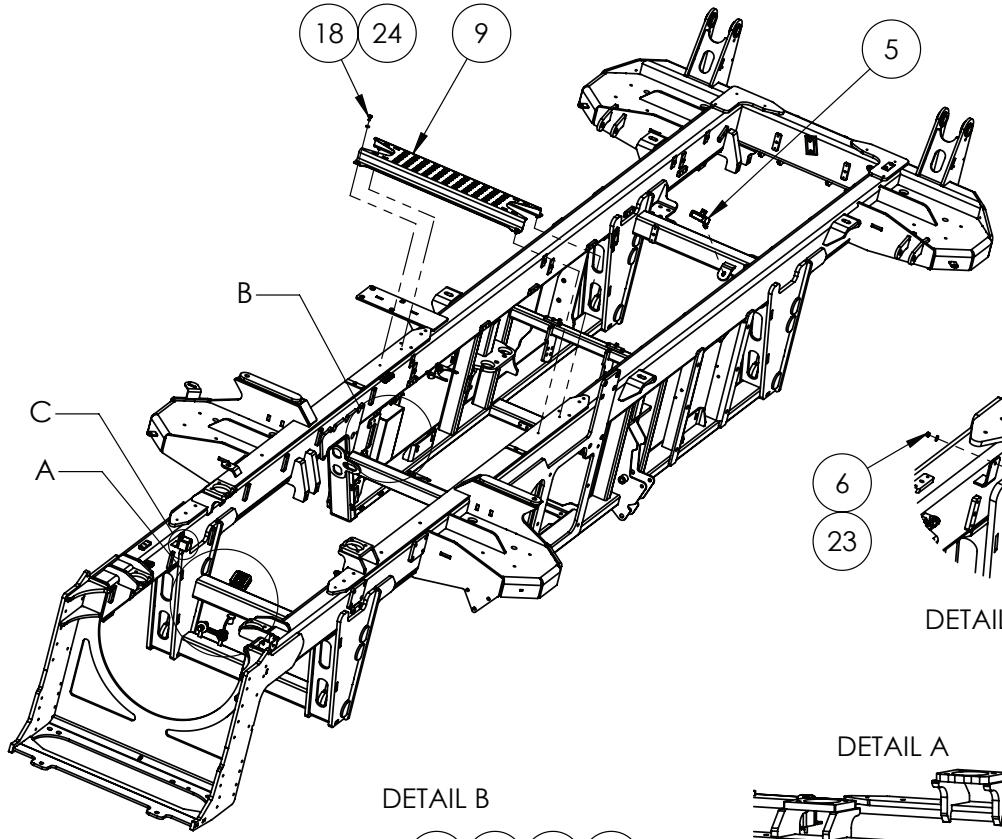

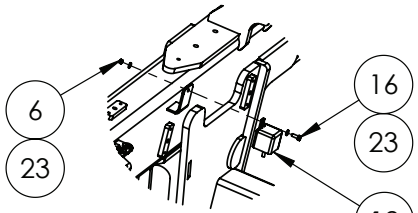

DETAIL C

DETAIL B

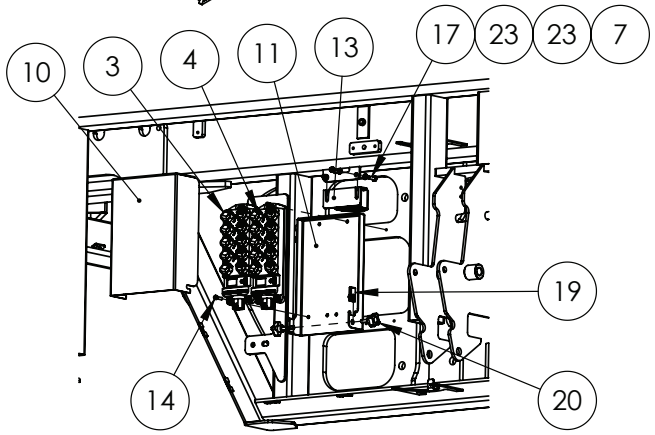

DETAIL A

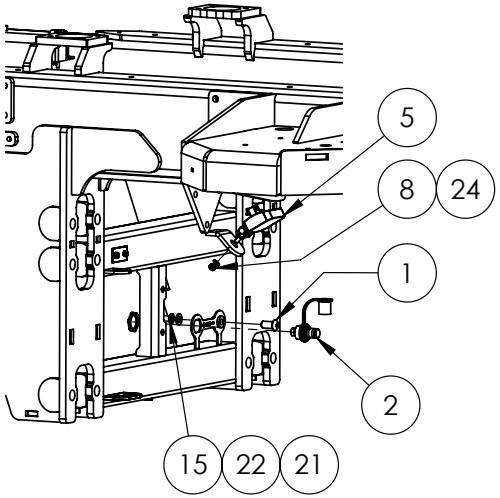

IF DESCRIPTION PREFIX IS ASSEMBLY DRAWING ONLY OR PRODUCTION DRAWING ONLY THE ITEM IS NOT FOR SALE			
ITEM	PART NUMBER	DESCRIPTION	QTY
1	GA0500175	BARREL NUT M12 X 30 ZP	1
2	GA5006383	BATTERY JUMPER STUD POSITIVE	1
3	GA3001133	I/O MODULE, 16 INPUT CHANNELS, CR2050, IFM, MODULE C	1
4	GA3000310	I/O MODULE, 8 OUTPUT CHANNELS, 8 INPUT CHANNELS, CR2052, IFM, MODULE B	1
5	GA3001114	LIGHT, LED, COMPACT FLOOD 20W, IONNIC, 98-8210	2
6	GA5003975	NUT M5 NYLOC SS	1
7	GA5048115	NUT M6 NYLOC ZP	2
8	GA5004917	NUT M8 NYLOC ZP	2
9	GA4000355	PLATE, CABLE TRAY, CHASSIS, LARGE FRAME SP S3	1
10	GA4406165	PLATE, IO MODULE COVER, PARALIFT REAR	1
11	GA4406160	PLATE, IO MODULE MOUNT, PARALIFT REAR	1
12	GA5048640	RELAY, 12V, 180 AMP PEAK, 100 AMP CONTINUOUS, 4 PIN, NORMALLY OPEN	1
13	GA5011985	REVERSE BEEPER	1
14	GA5003581	SHCS M5 X 20 SS A2-70	6
15	GA5011239	BOLT M12 X 50 GR8.8 ZP	1
16	GA5004041	SET SCREW M6 X 16 GR8.8 ZP	1
17	GA5004065	SET SCREW M6 X 20 GR8.8 ZP	2
18	GA5011465	SET SCREW M8 X 16 GR8.8 ZP	4
19	GA5066830	SPEED CLIP M6	2
20	GA5069965	STAR KNOB 40 OD M6 X 20	2
21	GA5000577	WASHER M12 FLAT SS HD	1
22	GA5000575	WASHER M12 SPRING SS	1
23	GA5004437	WASHER M6 FLAT SS HD	6
24	GA5003651	WASHER M8 FLAT SS	6
GA7800292 GOLDACRES		ELECTRICAL COMPONENTS, STAGE 1, LARGE FRAME CROP CRUISER S3, MY25	REV 00

Harness and Pneumatic Saddles, LH Side

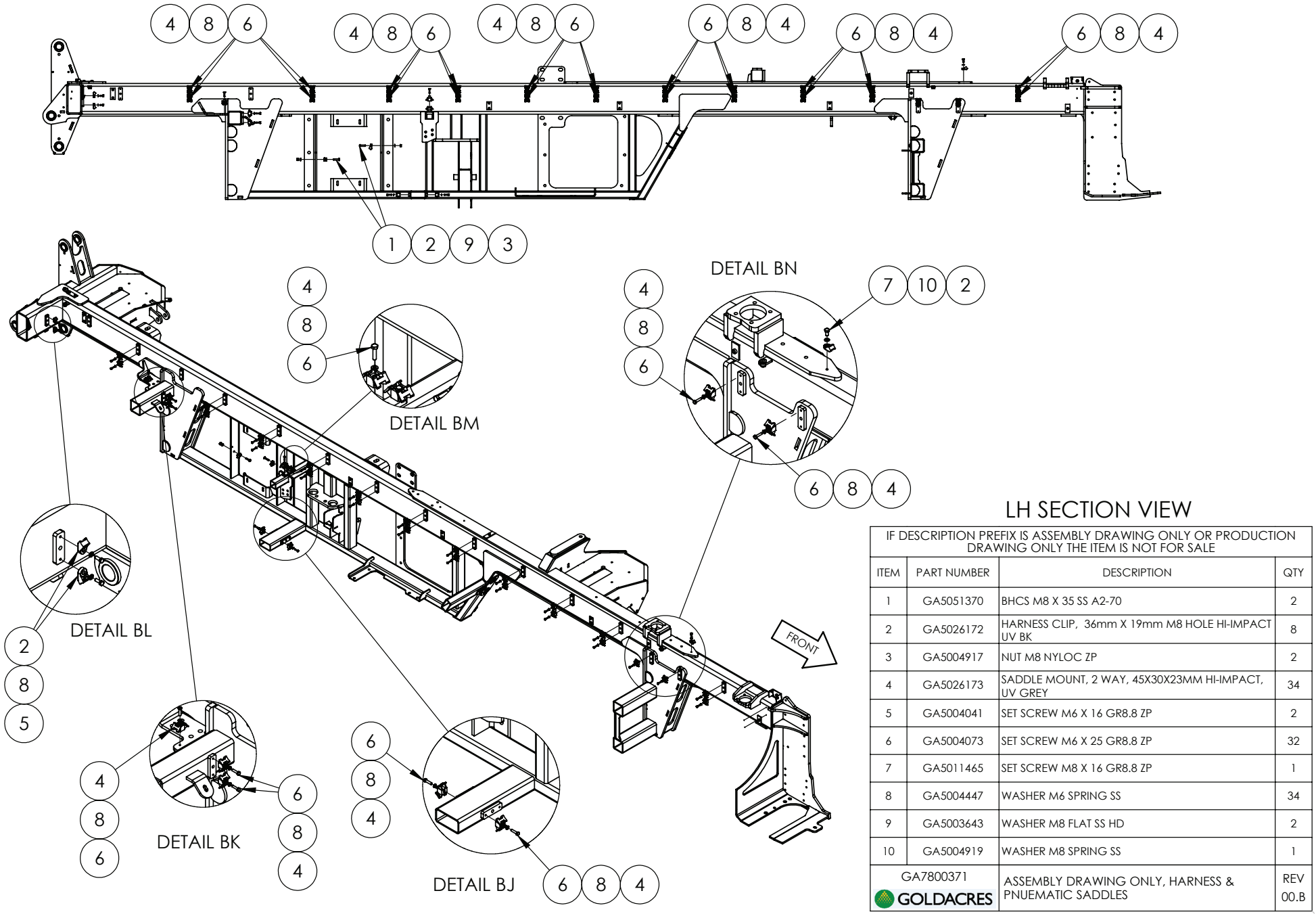

LH SECTION VIEW

IF DESCRIPTION PREFIX IS ASSEMBLY DRAWING ONLY OR PRODUCTION DRAWING ONLY THE ITEM IS NOT FOR SALE			
ITEM	PART NUMBER	DESCRIPTION	QTY
1	GA5051370	BHCS M8 X 35 SS A2-70	2
2	GA5026172	HARNESS CLIP, 36mm X 19mm M8 HOLE HI-IMPACT UV BK	8
3	GA5004917	NUT M8 NYLOC ZP	2
4	GA5026173	SADDLE MOUNT, 2 WAY, 45X30X23MM HI-IMPACT, UV GREY	34
5	GA5004041	SET SCREW M6 X 16 GR8.8 ZP	2
6	GA5004073	SET SCREW M6 X 25 GR8.8 ZP	32
7	GA5011465	SET SCREW M8 X 16 GR8.8 ZP	1
8	GA5004447	WASHER M6 SPRING SS	34
9	GA5003643	WASHER M8 FLAT SS HD	2
10	GA5004919	WASHER M8 SPRING SS	1
GA7800371 GOLDACRES		ASSEMBLY DRAWING ONLY, HARNESS & PNUEMATIC SADDLES	REV 00.B

Harness and Pneumatic Saddles, RH Side

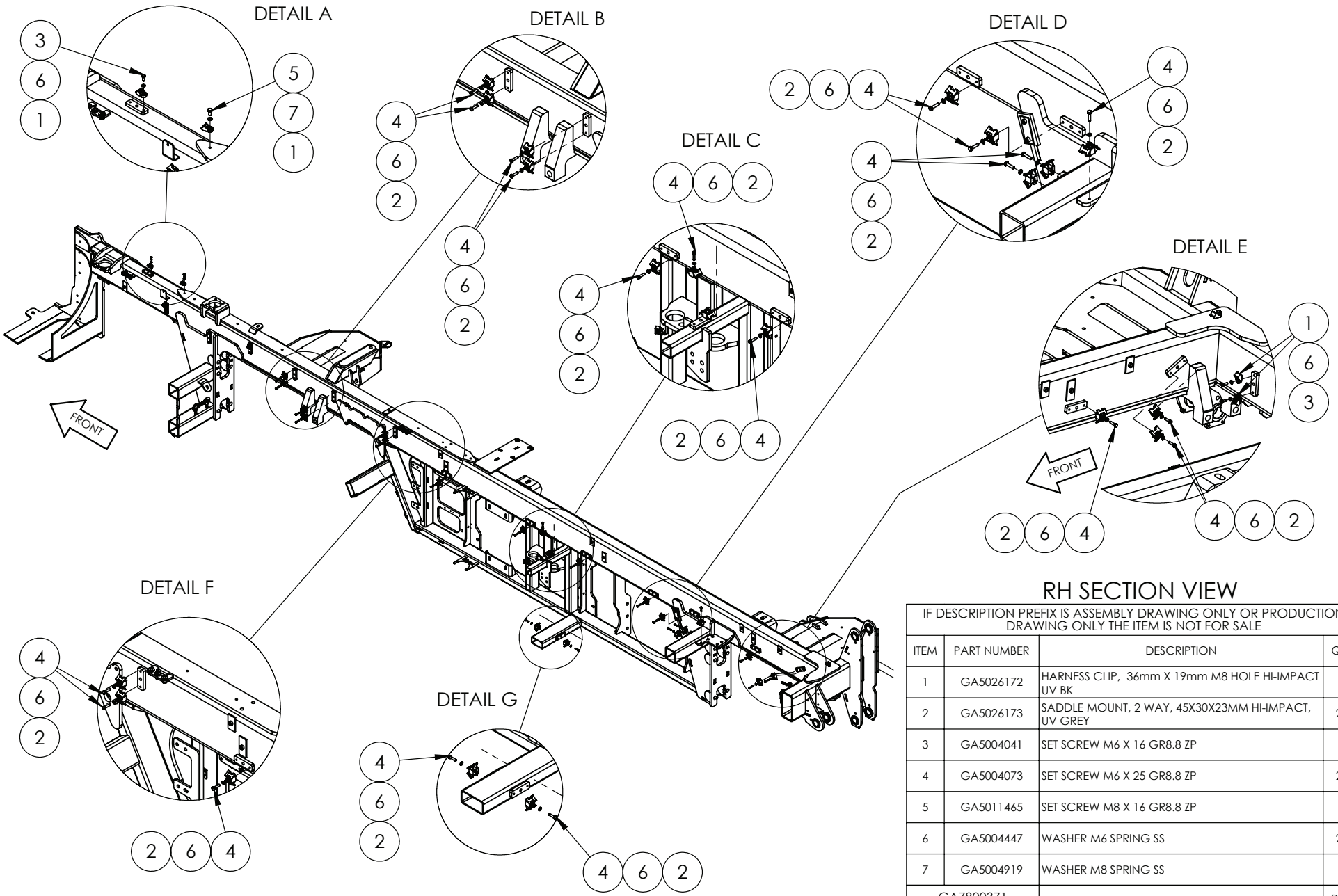

RH SECTION VIEW

IF DESCRIPTION PREFIX IS ASSEMBLY DRAWING ONLY OR PRODUCTION DRAWING ONLY THE ITEM IS NOT FOR SALE			
ITEM	PART NUMBER	DESCRIPTION	QTY
1	GA5026172	HARNESS CLIP, 36mm X 19mm M8 HOLE HI-IMPACT UV BK	9
2	GA5026173	SADDLE MOUNT, 2 WAY, 45X30X23MM HI-IMPACT, UV GREY	24
3	GA5004041	SET SCREW M6 X 16 GR8.8 ZP	3
4	GA5004073	SET SCREW M6 X 25 GR8.8 ZP	22
5	GA5011465	SET SCREW M8 X 16 GR8.8 ZP	1
6	GA5004447	WASHER M6 SPRING SS	25
7	GA5004919	WASHER M8 SPRING SS	1
GA7800371 GOLDACRES		ASSEMBLY DRAWING ONLY, HARNESS & PNUEMATIC SADDLES	REV 00.B

Boom Recirculation Poly Mounting

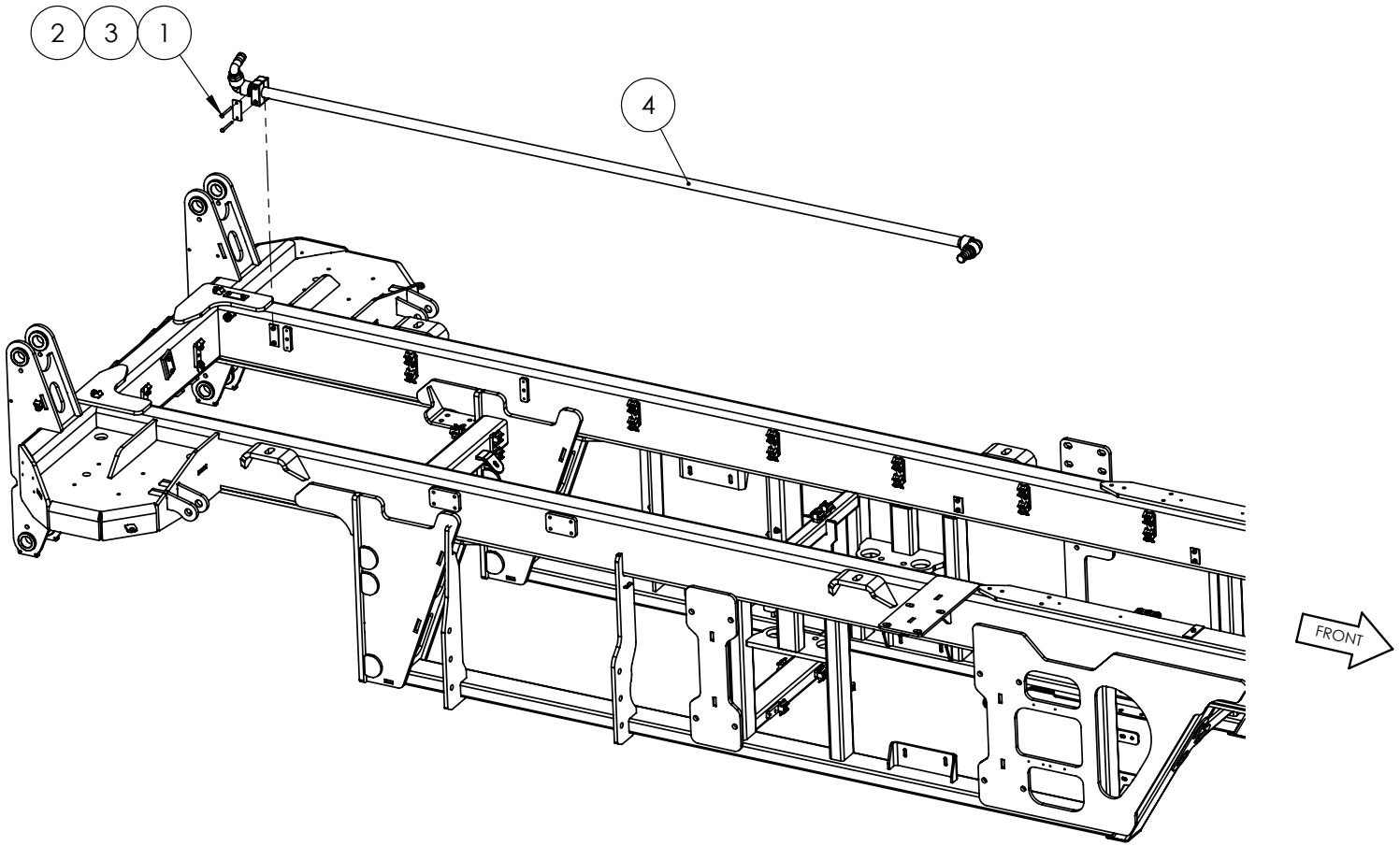

IF DESCRIPTION PREFIX IS ASSEMBLY DRAWING ONLY OR PRODUCTION DRAWING ONLY THE ITEM IS NOT FOR SALE			
ITEM	PART NUMBER	DESCRIPTION	QTY
1	GA5004097	BOLT M6 X 60 GR8.8 ZP	2
2	GA3500699	MOUNTING CLAMP, SINGLE TYPE, JAW, PAIR, GROUP 5, 33.7mm, RCS-33.5J	1
3	GA5078075	MOUNTING CLAMP, SINGLE TYPE, PLATE, TOP, GROUP 5, RCS-5PT	1
4	GA4909500	PIPE ASSEMBLY, BOOM RECIRC, CHASSIS, SERIES 3	1
GA7800295 GOLDACRES		ASSEMBLY DRAWING ONLY, BOOM RECIRC PIPE INSTALLATION	REV 00

Pipe Assembly, Boom Recirculation

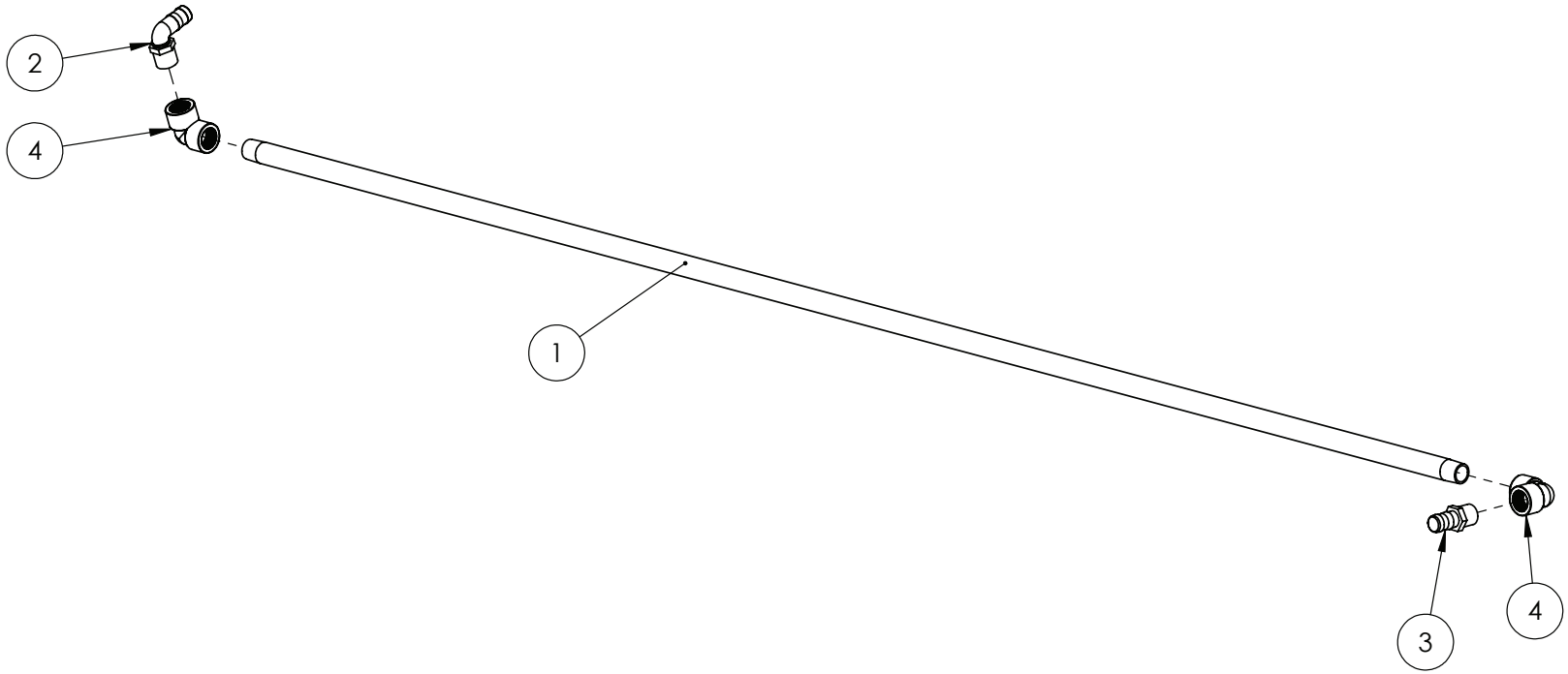

IF DESCRIPTION PREFIX IS ASSEMBLY DRAWING ONLY OR PRODUCTION DRAWING ONLY THE ITEM IS NOT FOR SALE			
ITEM	PART NUMBER	DESCRIPTION	QTY
1	GA2000130	BOOM LINE, POLY, 1", 6000mm LENGTH	2.6
2	GA5077723	HOSE BARB, ELBOW, 90 DEGREE, 1" MALE X 1" HOSE, BANJO	1
3	GA5077718	HOSE BARB, STRAIGHT, 1 MALE THREAD X 1 HOSE, BANJO	1
4	GA5077655	STREET ELBOW, 90 DEGREE, 1 FEMALE THREAD X 1 FEMALE THREAD, BANJO, EL100-90	2
GA4909500 GOLDACRES		PIPE ASSEMBLY, BOOM RECIRC, CHASSIS, SERIES 3	REV B

Boom Spray Line, Mounting

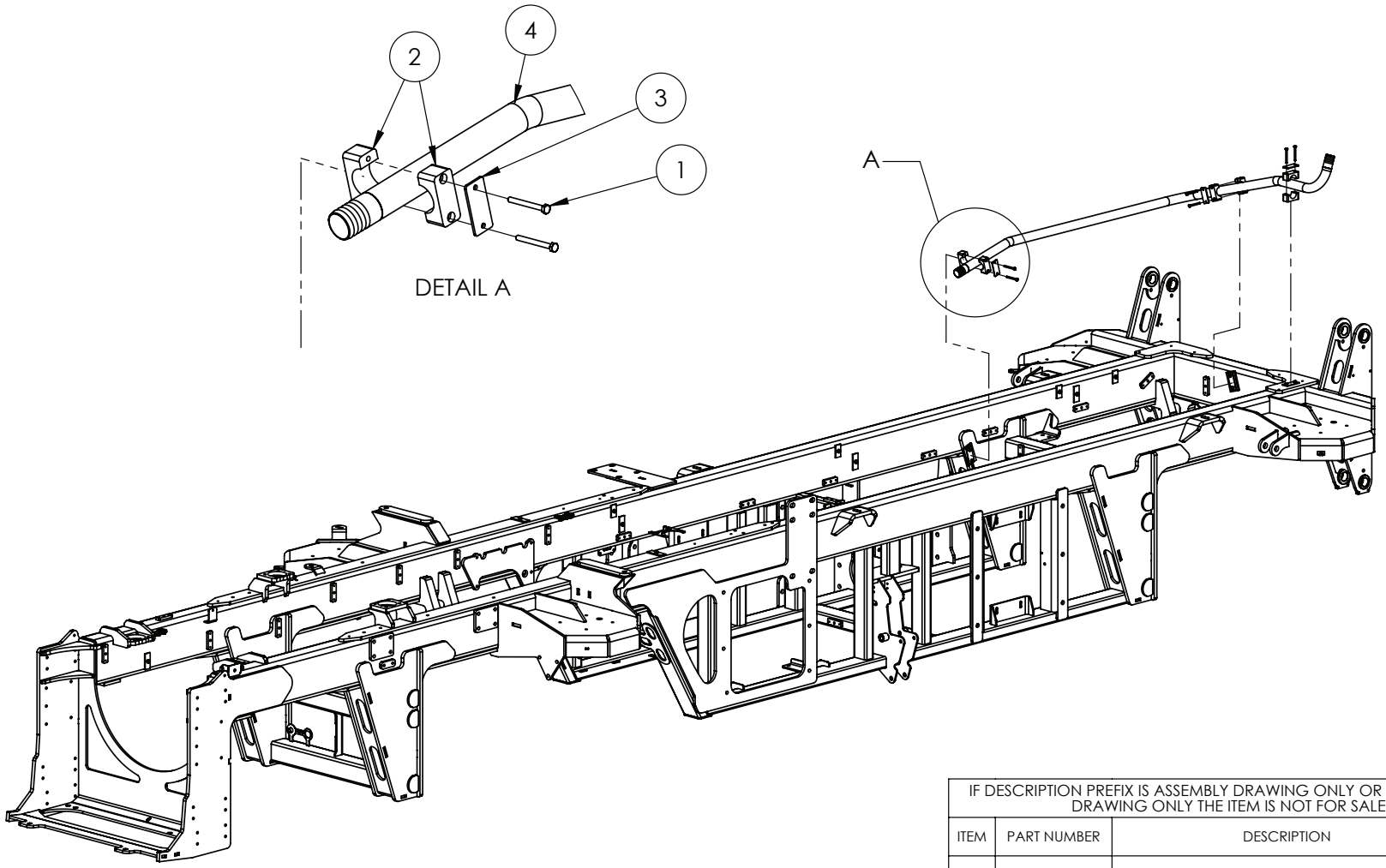

IF DESCRIPTION PREFIX IS ASSEMBLY DRAWING ONLY OR PRODUCTION DRAWING ONLY THE ITEM IS NOT FOR SALE			
ITEM	PART NUMBER	DESCRIPTION	QTY
1	GA5004097	BOLT M6 X 60 GR8.8 ZP	6
2	GA5078070	MOUNTING CLAMP, SINGLE TYPE, JAW, PAIR, GROUP 5, 38mm, RCS-38J	3
3	GA5078075	MOUNTING CLAMP, SINGLE TYPE, PLATE, TOP, GROUP 5, RCS-5PT	3
4	GA4909529	PIPE FAB, BOOM MAIN SUPPLY, CHASSIS, LARGE FRAME CROP CRUISER, SERIES 3	1
GA7800362 GOLDACRES		ASSEMBLY DRAWING ONLY, SPRAY PLUMBING, CHASSIS, LARGE FRAME SP, S3	REV 00

Engine Mounts

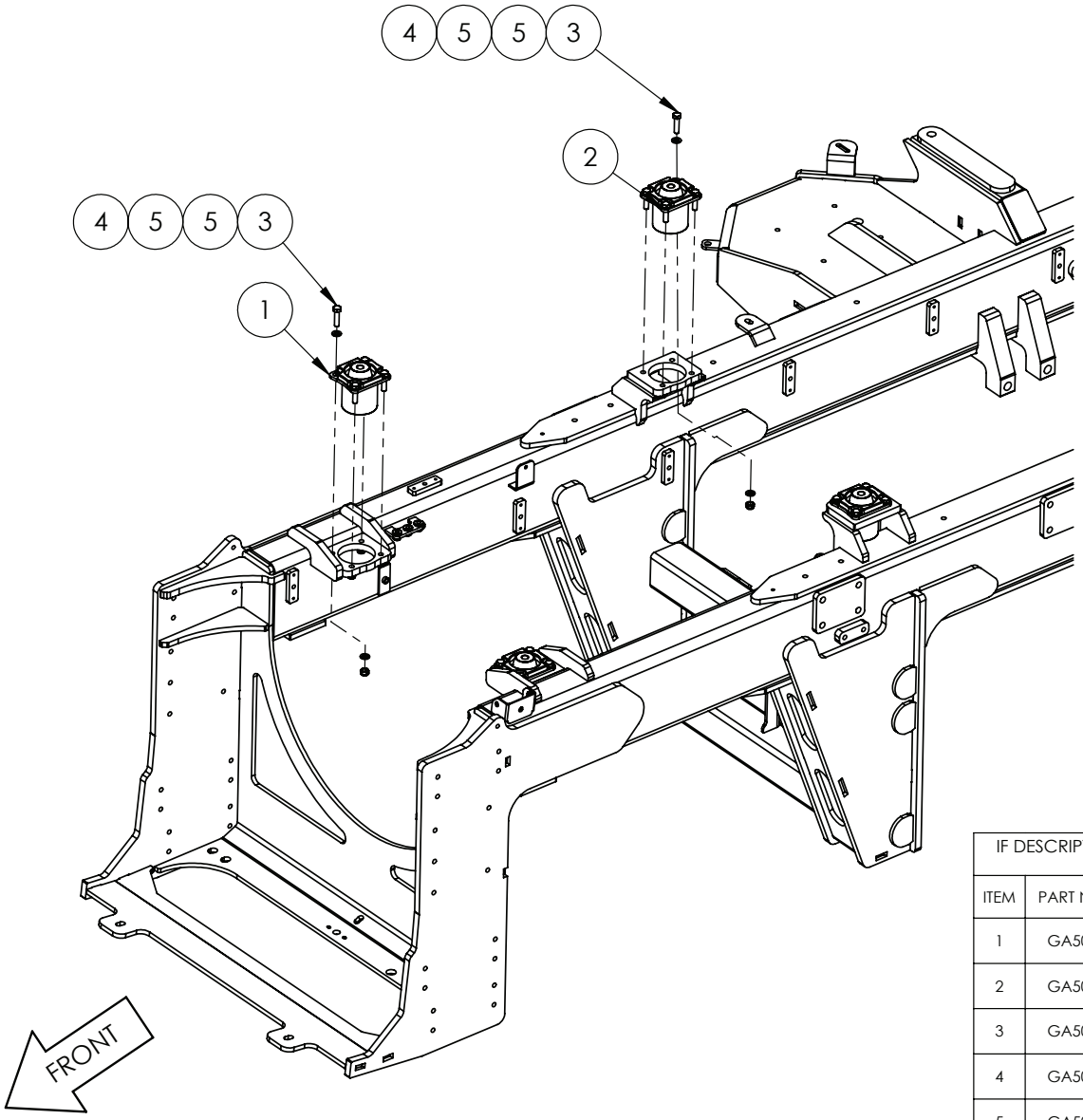

IF DESCRIPTION PREFIX IS ASSEMBLY DRAWING ONLY OR PRODUCTION DRAWING ONLY THE ITEM IS NOT FOR SALE			
ITEM	PART NUMBER	DESCRIPTION	QTY
1	GA5026358	ANTI VIBRATION MOUNT , HYDROCONE, 32 SUPPORT, 40 SHORE, 177104	2
2	GA5026359	ANTI VIBRATION MOUNT , HYDROCONE, 32 SUPPORT, 60 SHORE, 177106	2
3	GA5065455	BOLT M10 X 40 GR8.8 ZP	16
4	GA5000141	NUT M10 NYLOC ZP	16
5	GA5000117	WASHER M10 FLAT SS HD	32
GA7800291 GOLDACRES		ASSEMBLY DRAWING ONLY, ENGINE ISOLATOR MOUNTS	REV 00

Hydraulic Tube, Transmission to Oil Cooler

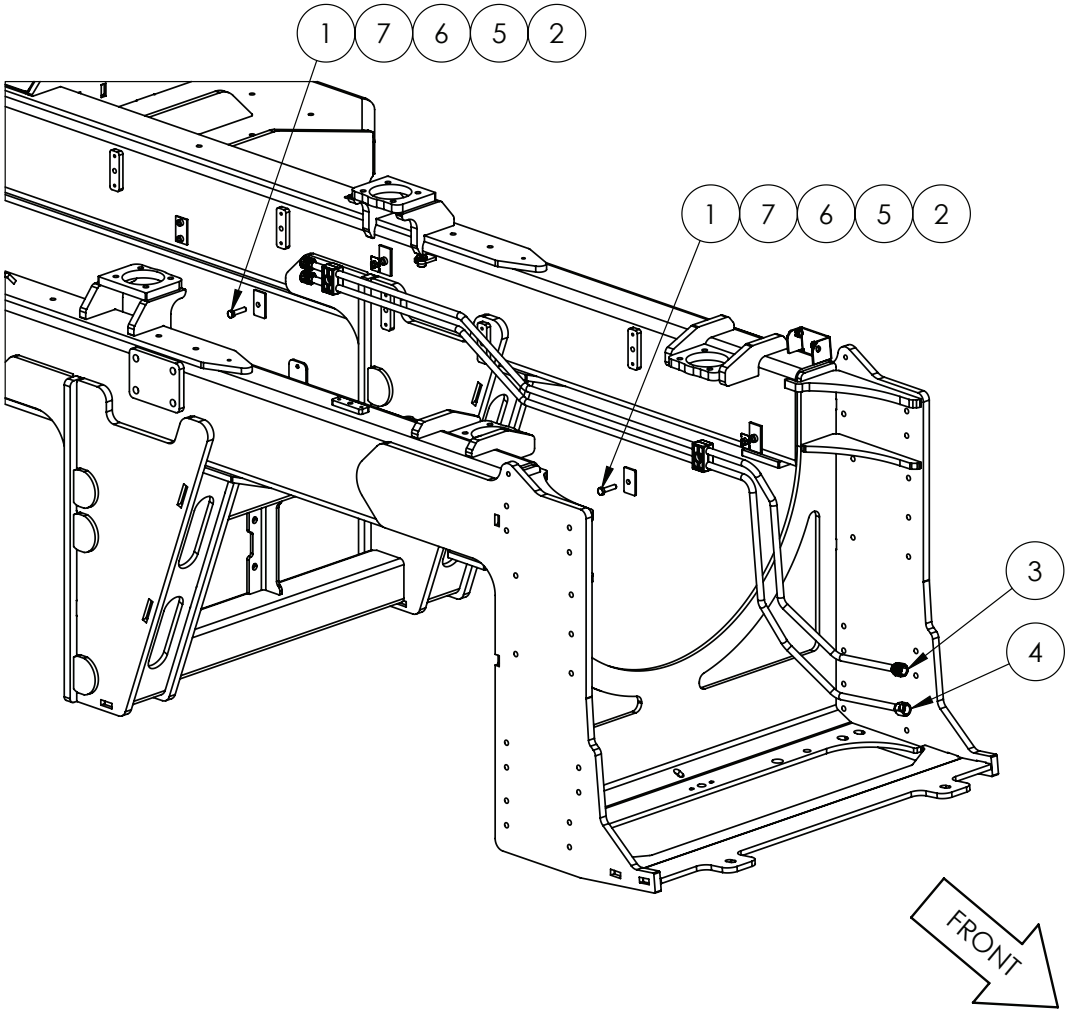

IF DESCRIPTION PREFIX IS ASSEMBLY DRAWING ONLY OR PRODUCTION DRAWING ONLY THE ITEM IS NOT FOR SALE			
ITEM	PART NUMBER	DESCRIPTION	QTY
1	GA5011481	BOLT M8 X 35 GR8.8 ZP	2
2	GA5070740	BUILD UP BOLT, STACKING, M8 X 20 HYDAC	2
3	GA3501786	HYDRAULIC TUBE, OIL COOLER TO TRANSMISSION, LF SP S3	1
4	GA3501785	HYDRAULIC TUBE, TRANSMISSION TO OIL COOLER, LF SP S3	1
5	GA5070760	LOCKING PLATE SUIT HYDAC CLAMPS, BUILD UP BOLT, STACKING	2
6	GA3501849	MOUNTING CLAMP, DOUBLE TYPE, JAW, PAIR, GROUP 2, 12.7mm, RCD-127J	2
7	GA5078042	MOUNTING CLAMP, DOUBLE TYPE, PLATE, TOP, GROUP 2, RCD-2PT	2
GA7800265 GOLDACRES		ASSEMBLY DRAWING ONLY, HYDRAULIC MANIFOLD AND TUBE, CHASSIS MOUNT, LARGE FRAME S3	REV 00

Hydraulic Manifold Mounting

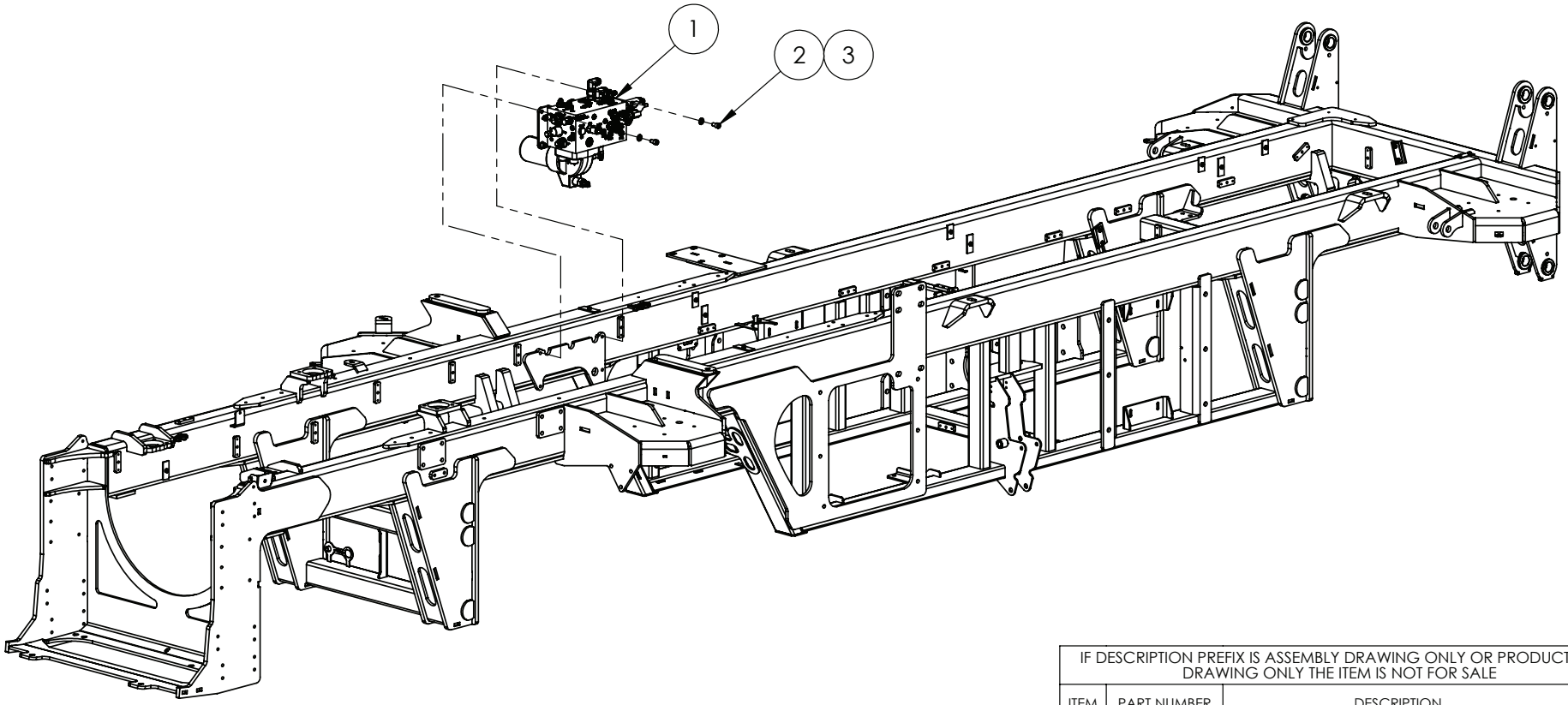

IF DESCRIPTION PREFIX IS ASSEMBLY DRAWING ONLY OR PRODUCTION DRAWING ONLY THE ITEM IS NOT FOR SALE			
ITEM	PART NUMBER	DESCRIPTION	QTY
1	GA6101900	HYDRAULIC MANIFOLD ASSEMBLY, CHASSIS CONTROL, LF SP S3, MY25	1
2	GA5050330	SHCS M12 X 20 GR12.9 ZP	4
3	GA5000577	WASHER M12 FLAT SS HD	4
GA7800265 GOLDACRES		ASSEMBLY DRAWING ONLY, HYDRAULIC MANIFOLD AND TUBE, CHASSIS MOUNT, LARGE FRAME S3	REV 00

Hydraulic Manifold Assembly

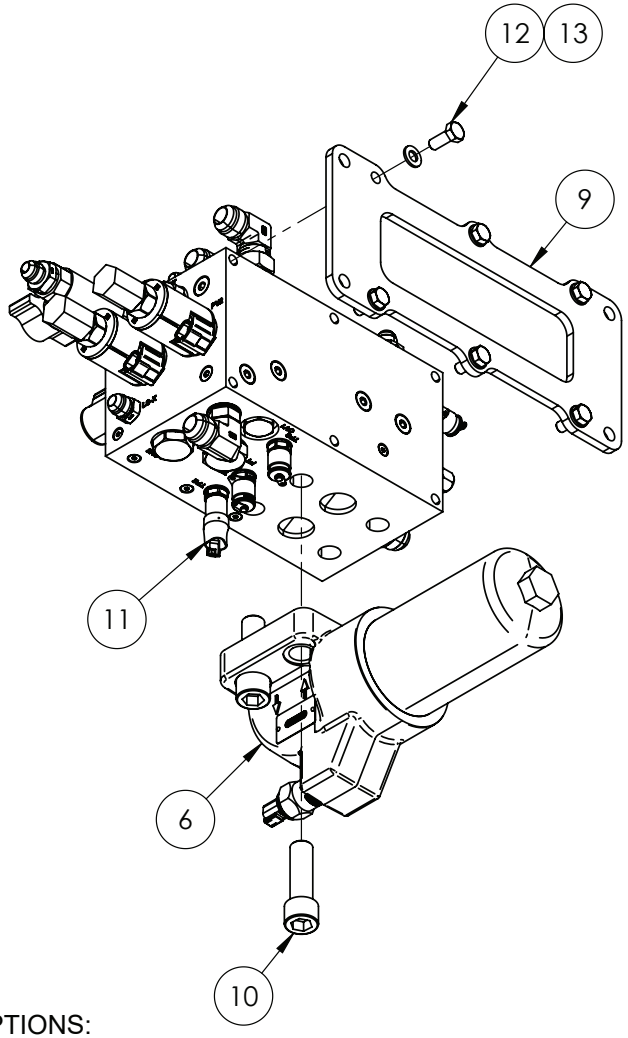

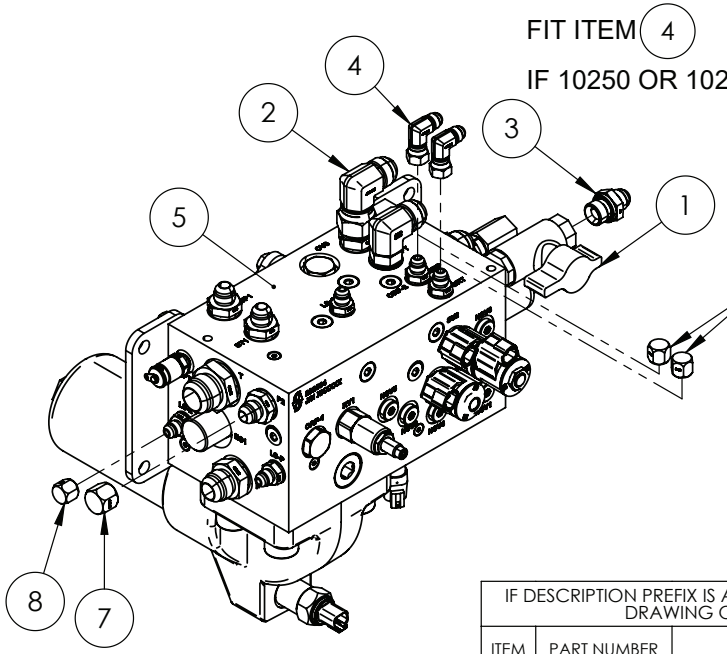

OPTIONS:
10250 - TRI-TECH RIVX SERIES BOOM - 36M
10260 - TRI-TECH RIVX SERIES BOOM - 42M
10195 - TRI-TECH RIVX SERIES BOOM - 48M
80105 - FRONT LINKAGE SP's ONLY

IF DESCRIPTION PREFIX IS ASSEMBLY DRAWING ONLY OR PRODUCTION DRAWING ONLY THE ITEM IS NOT FOR SALE			
ITEM	PART NUMBER	DESCRIPTION	QTY
1	GA5000835	BALL VALVE HYDRAULIC 1/2" FF	1
2	GA3500823	HYDRAULIC ADAPTOR ELBOW, 1 1/16" JIC MALE X 1 1/16" JIC FEMALE SWIVEL, S15-1717	1
3	GA3500303	HYDRAULIC ADAPTOR NIPPLE, 1/2" BSPP TO 3/4" JIC	1
4	GA3500002	HYDRAULIC COUPLING, ELBOW, 90 DEGREE, 9/16" MALE JIC, 9/16" FEMALE SWIVEL JIC	2
5	GA3501794	HYDRAULIC MANIFOLD, CHASSIS, LFSP S3, MY25	1
6	GA3500709	HYDRAULIC PRESSURE FILTER ASSEMBLY, 10 MICRON, 4 BOLT FLANGE MOUNT, 6 BAR BYPASS, ELECTRONIC CLOGGING INDICATOR, DF240, HYDAC	1
7	GA3500794	HYDRAULIC ADAPTOR, CAP, 3/4" JIC FEMALE, S65-12	1
8	GA3500793	HYDRAULIC ADAPTOR, CAP, 9/16" JIC FEMALE, S65-09	3
9	GA4000141	PLATE, MOUNT, CHASSIS MANIFOLD, LF SP S3	1
10	GA0500029	SHCS M20 X 65 GR 12.9 ZP	4
11	GA3000949	SENSOR, PRESSURE TRANSMITTER, 0.5-4.5 V, 1/4", 0 TO 250 BAR, 3 PIN DEUTSCH, IFM PU8701	1
12	GA5006161	SET SCREW M10 X 25 GR8.8 ZP	6
13	GA5000117	WASHER M10 FLAT SS HD	6
GA6101900 GOLDACRES		HYDRAULIC MANIFOLD ASSEMBLY, CHASSIS CONTROL, LF SP S3, MY25	REV 00.B

Hydraulic Tube, Fill Pump to Manifold

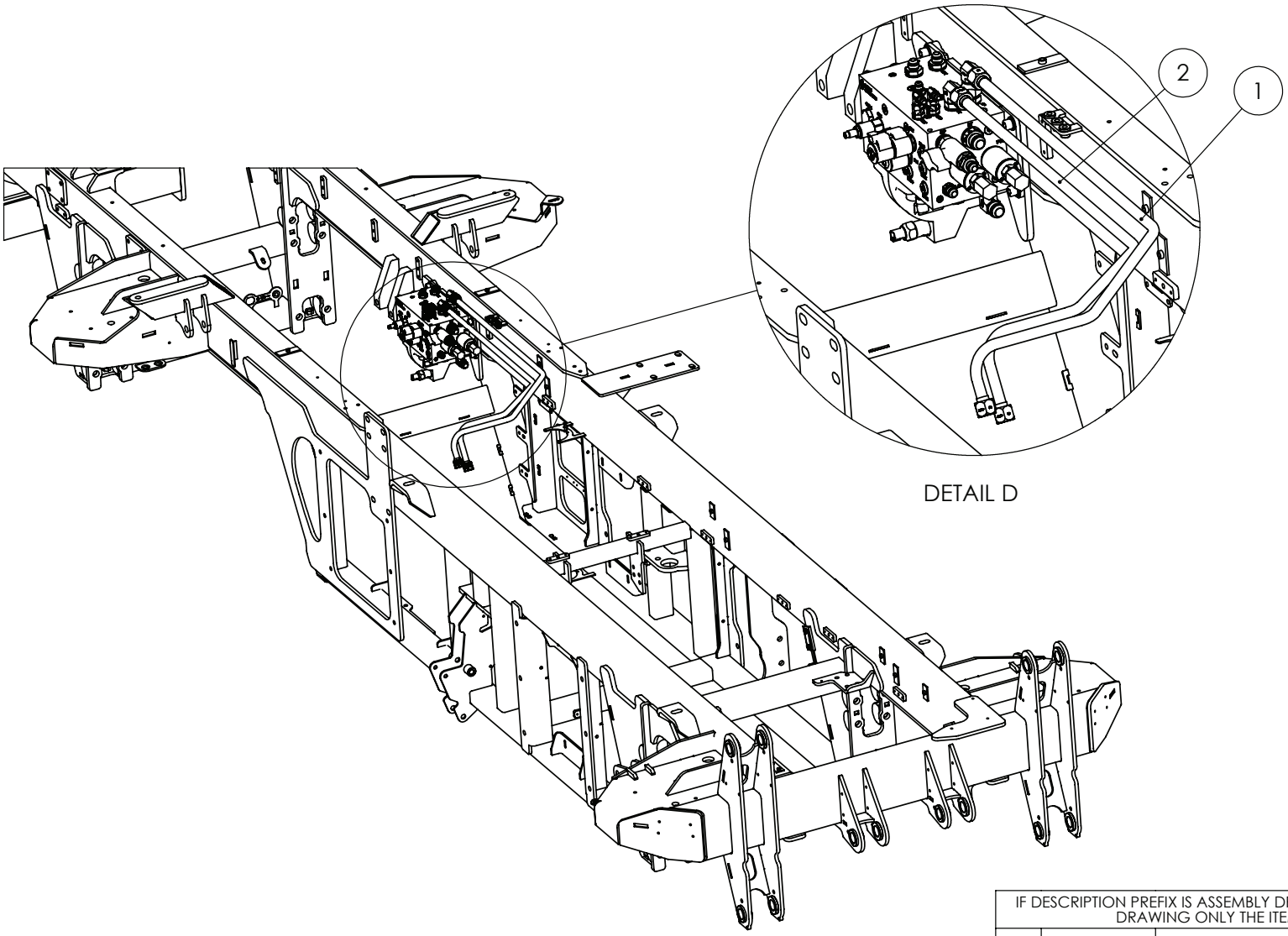

IF DESCRIPTION PREFIX IS ASSEMBLY DRAWING ONLY OR PRODUCTION DRAWING ONLY THE ITEM IS NOT FOR SALE			
ITEM	PART NUMBER	DESCRIPTION	QTY
1	GA3501858	HYDRAULIC TUBE, FILL PUMP PRESSURE, LF SP S3	1
2	GA3501859	HYDRAULIC TUBE, FILL PUMP TANK, LF SP S3	1
GA7800265 GOLDACRES		ASSEMBLY DRAWING ONLY, HYDRAULIC MANIFOLD AND TUBE, CHASSIS MOUNT, LARGE FRAME S3	REV 00

Accumulator & Hydraulic Tube Fitment

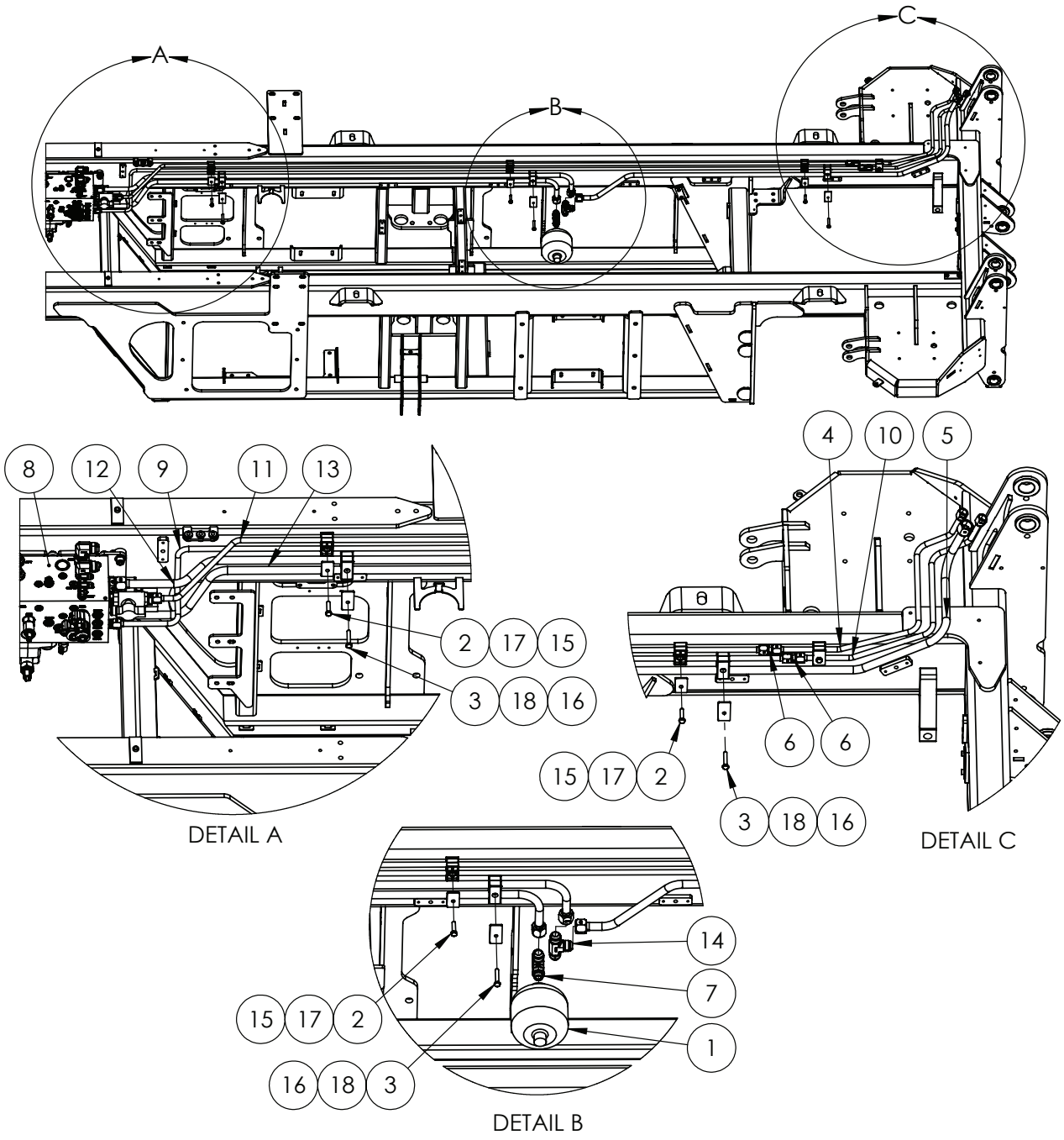

IF DESCRIPTION PREFIX IS ASSEMBLY DRAWING ONLY OR PRODUCTION DRAWING ONLY THE ITEM IS NOT FOR SALE			
ITEM	PART NUMBER	DESCRIPTION	QTY
1	GA5007788	ACCUMULATOR, HYDRAULIC, 1L, PRECHARGE 35BAR	1
2	GA5011481	BOLT M8 X 35 GR8.8 ZP	4
3	GA0500033	BOLT M8 X 45 GR8.8 ZP	3
4	GA3501836	HYDRAULIC TUBE, BOOM MANIFOLD PRESSURE B, LF SP S3	1
5	GA3501777	HYDRAULIC TUBE, BOOM MANIFOLD TANK B, LF SP S3	1
6	GA3501850	HYDRAULIC ADAPTOR NIPPLE, 1/2" JIC TO 1/2" JIC, S17-1212	2
7	GA3501307	HYDRAULIC ADAPTOR, TEE, 1/2" BSPP O-RING MALE, 1-1/16" JIC MALE, 1-1/16" JIC MALE, S78-081717	1
8	GA6101900	HYDRAULIC MANIFOLD ASSEMBLY, CHASSIS CONTROL, LF SP S3, MY25	1
9	GA3501775	HYDRAULIC TUBE, BOOM MANIFOLD LS A, LF SP S3	1
10	GA3501837	HYDRAULIC TUBE, BOOM MANIFOLD LS B, LF SP S3	1
11	GA3501773	HYDRAULIC TUBE, BOOM MANIFOLD PRESSURE A, LF SP S3	1
12	GA3501774	HYDRAULIC TUBE, BOOM MANIFOLD TANK A, LF SP S3	1
13	GA3501776	HYDRAULIC TUBE, SPRAY PUMP PRESSURE, LF SP S3	1
14	GA3500737	HYDRAULIC ADAPTOR, TEE, 1 1/16" JIC MALE X 1 1/16" JIC MALE X 1 1/16" JIC MALE, S19-171717	1
15	GA3501849	MOUNTING CLAMP, DOUBLE TYPE, JAW, PAIR, GROUP 2, 12.7mm, RCD-127J	4
16	GA5073795	MOUNTING CLAMP, DOUBLE TYPE, JAW, PAIR, GROUP 3, 19mm, BLACK, RCD-19J	3
17	GA5078042	MOUNTING CLAMP, DOUBLE TYPE, PLATE, TOP, GROUP 2, RCD-2PT	4
18	GA5078046	MOUNTING CLAMP, DOUBLE TYPE, PLATE, TOP, GROUP 3, RCD-3PT	3
19	GA5050330	SHCS M12 X 20 GR12.9 ZP	4
20	GA5000577	WASHER M12 FLAT SS HD	4
GA7800265 GOLDACRES		ASSEMBLY DRAWING ONLY, HYDRAULIC MANIFOLD AND TUBE, CHASSIS MOUNT, LARGE FRAME S3	REV 00

Air Line Tee Fitment

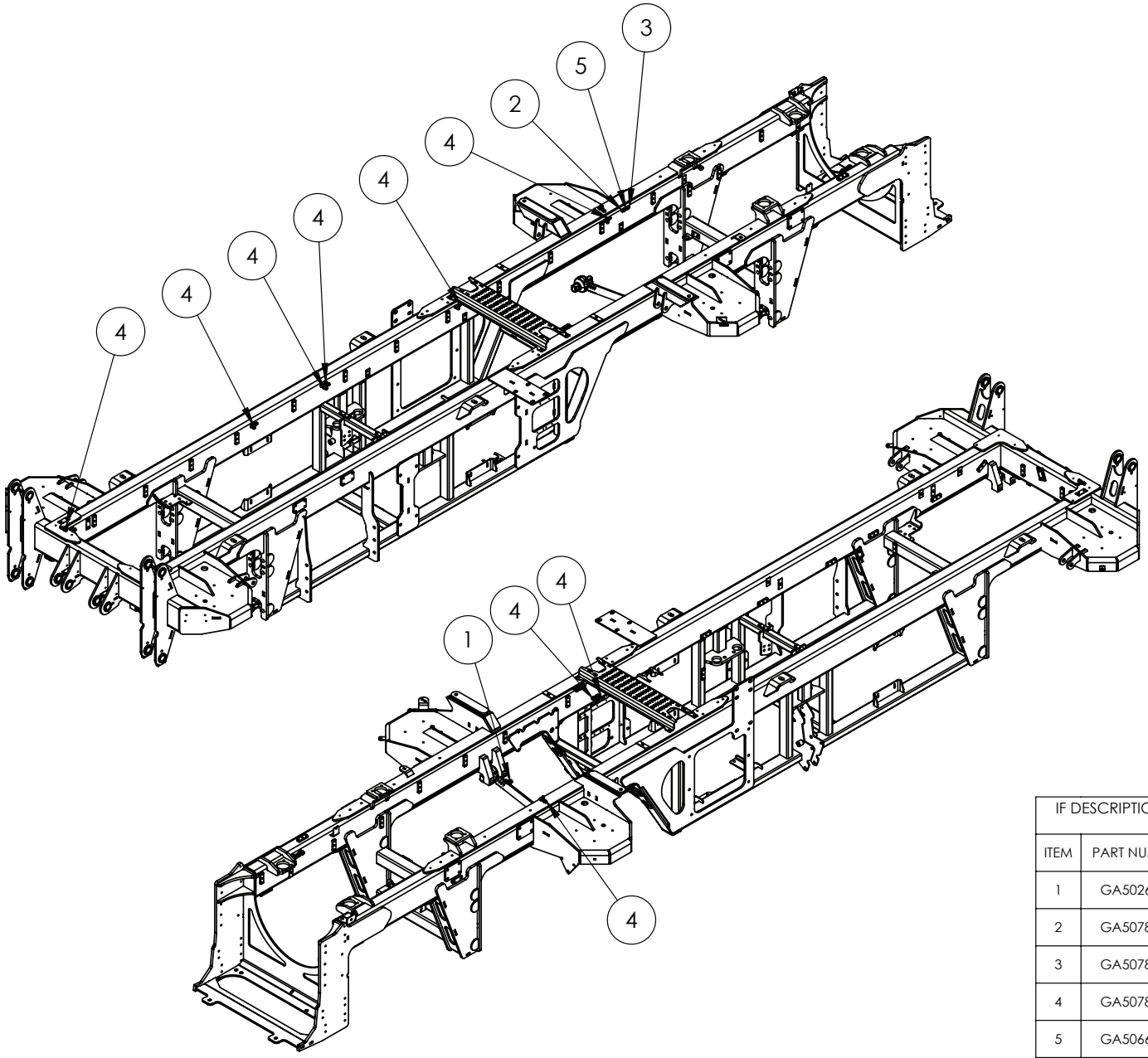

IF DESCRIPTION PREFIX IS ASSEMBLY DRAWING ONLY OR PRODUCTION DRAWING ONLY THE ITEM IS NOT FOR SALE			
ITEM	PART NUMBER	DESCRIPTION	QTY
1	GA5026096	AIR FITTING, ELBOW, 12mm TUBE, PUSH IN, BRASS, GP, MDQ65DOT12	1
2	GA5078517	AIR FITTING, STRAIGHT, 3/8" TUBE, 1/4" NPT MALE, PUSH IN, BRASS, ALKON - AQ68-DOT-6X4	1
3	GA5078675	AIR FITTING, STRAIGHT, 6mm TUBE, 1/4" NPT MALE, PUSH IN, BRASS, ALKON - MAQ68-DOT-6X4	1
4	GA5078516	AIR FITTING, TEE, 3/8" TUBE, PUSH IN, BRASS, ALKON - AQ64-DOT-6	9
5	GA5066940	SOCKET, 1/4 FEMALE THREAD, HEX, BRASS	1
GA7800289 GOLDACRES		ASSEMBLY DRAWING, AIR LINE TEE LOCATION, CHASSIS, LF S3	REV 00

Harness and Pneumatic Saddles, Rear

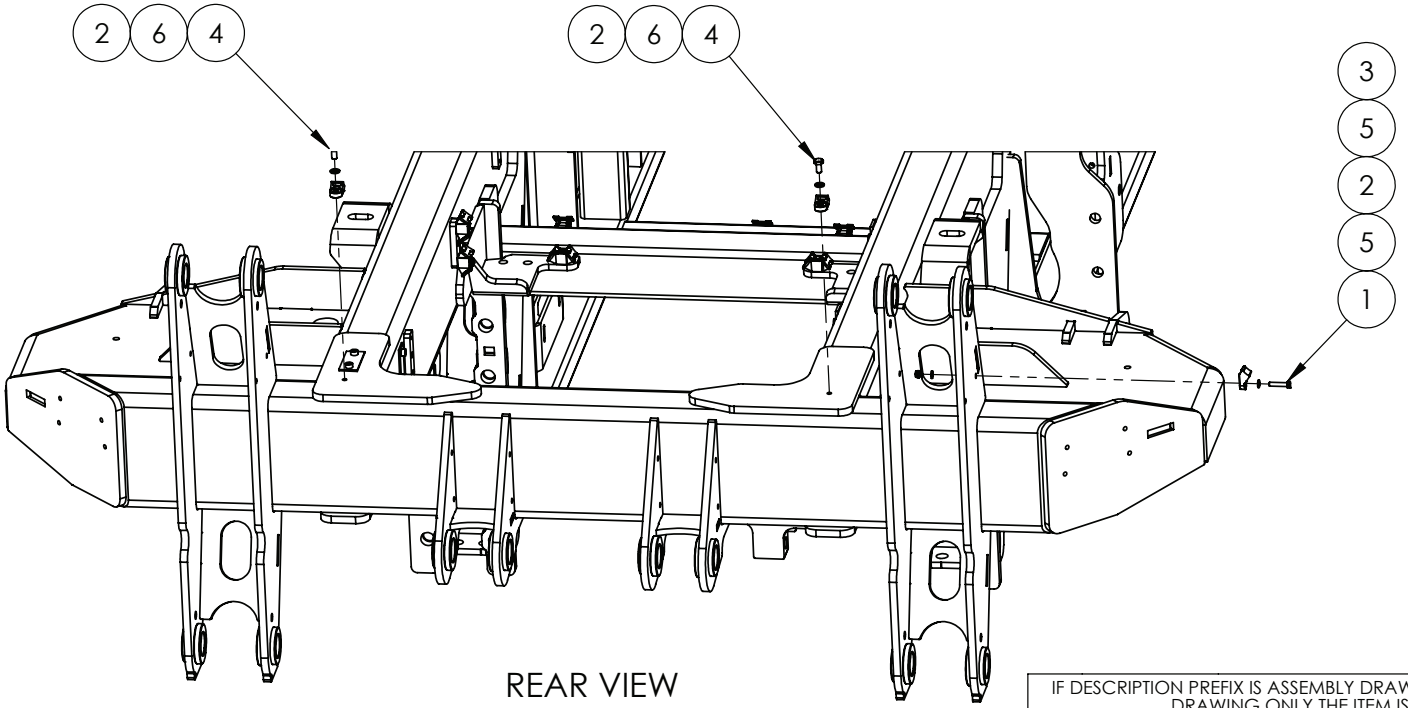

REAR VIEW

IF DESCRIPTION PREFIX IS ASSEMBLY DRAWING ONLY OR PRODUCTION DRAWING ONLY THE ITEM IS NOT FOR SALE			
ITEM	PART NUMBER	DESCRIPTION	QTY
1	GA5004077	BOLT M6 X 30 GR8.8 ZP	1
2	GA5026172	HARNESS CLIP, 36mm X 19mm M8 HOLE HI-IMPACT UV BK	8
3	GA5048115	NUT M6 NYLOC ZP	1
4	GA5011465	SET SCREW M8 X 16 GR8.8 ZP	2
5	GA5004437	WASHER M6 FLAT SS HD	2
6	GA5004919	WASHER M8 SPRING SS	2
GA7800371 GOLDACRES		ASSEMBLY DRAWING ONLY, HARNESS & PNUEMATIC SADDLES	REV 00.B

Air Tanks & Park Brake Control Valve Mounting

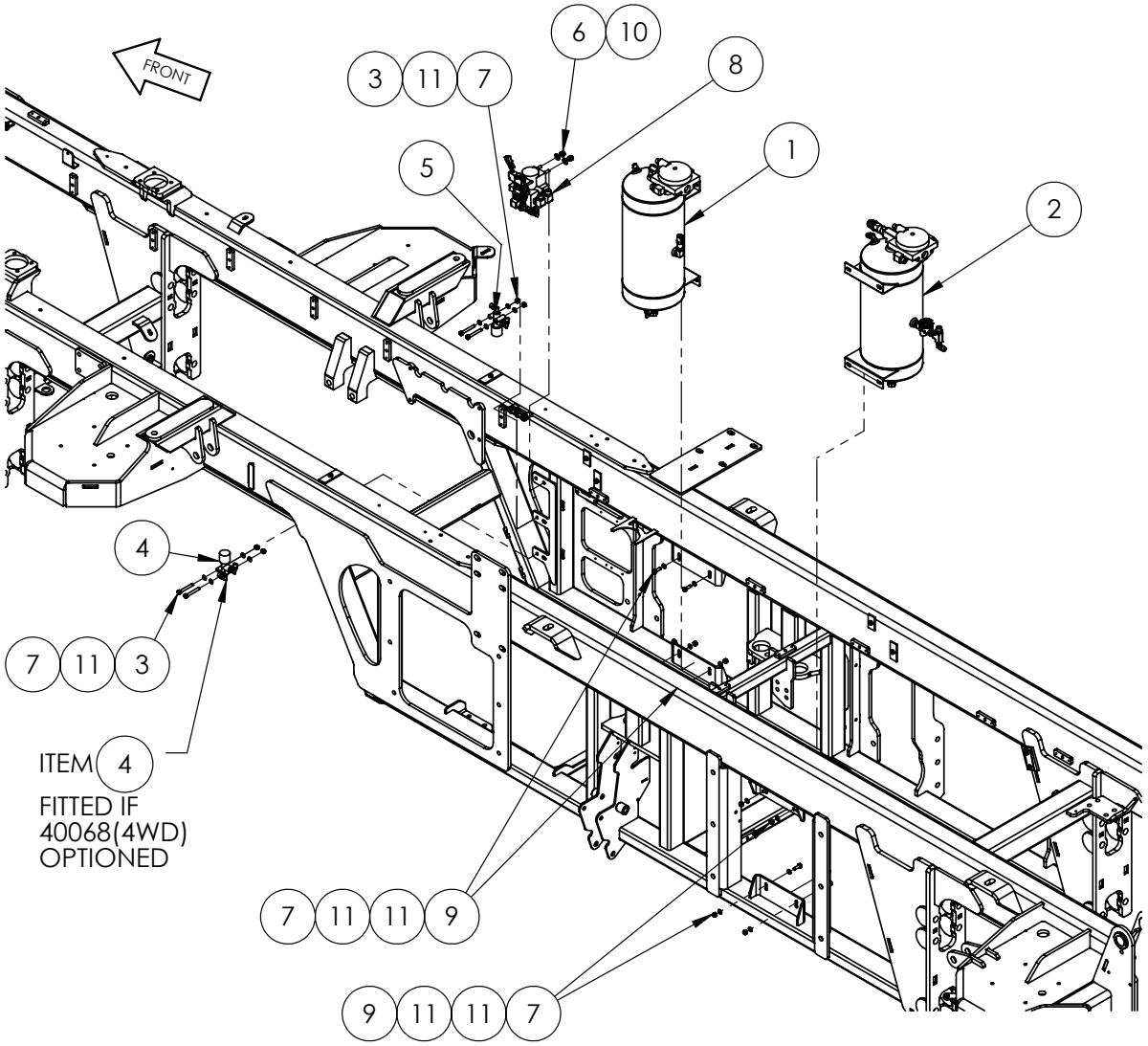

IF DESCRIPTION PREFIX IS ASSEMBLY DRAWING ONLY OR PRODUCTION DRAWING ONLY THE ITEM IS NOT FOR SALE			
ITEM	PART NUMBER	DESCRIPTION	QTY
1	GA6101954	AIR TANK, PRIMARY, FRONT, SP	1
2	GA4909430	AIR TANK, SECONDARY, REAR AND ACCESSORIES, SP	1
3	GA5011489	BOLT M8 X 60 GR8.8 ZP	4
4	GA4909567	BRAKE LINE PRESSURE REDUCING VALVE, 4X4 BRAKE SYSTEMS, LARGE FRAME SP S3	1
5	GA4909567	BRAKE LINE PRESSURE REDUCING VALVE, 4X4 BRAKE SYSTEMS, LARGE FRAME SP S3	1
6	GA5048345	NUT 3/8" NYLOC UNC ZP	2
7	GA5004917	NUT M8 NYLOC ZP	12
8	GA4909439	PARK BRAKE CONTROL VALVE, 6 BAR HOLD OFF PRESSURE, LARGE FRAME S3	1
9	GA5004711	SET SCREW M8 X 25 GR8.8 ZP	8
10	GA5002563	WASHER 3/8" X 7/8" FLAT SS	2
11	GA5003643	WASHER M8 FLAT SS HD	24
GA7800266 GOLDACRES		ASSEMBLY DRAWING ONLY, PNEUMATIC COMPONENTS, STD EQUIPMENT, LF S3	REV 00

Air Tank Assembly, Primary, Front Brake & Park Brake

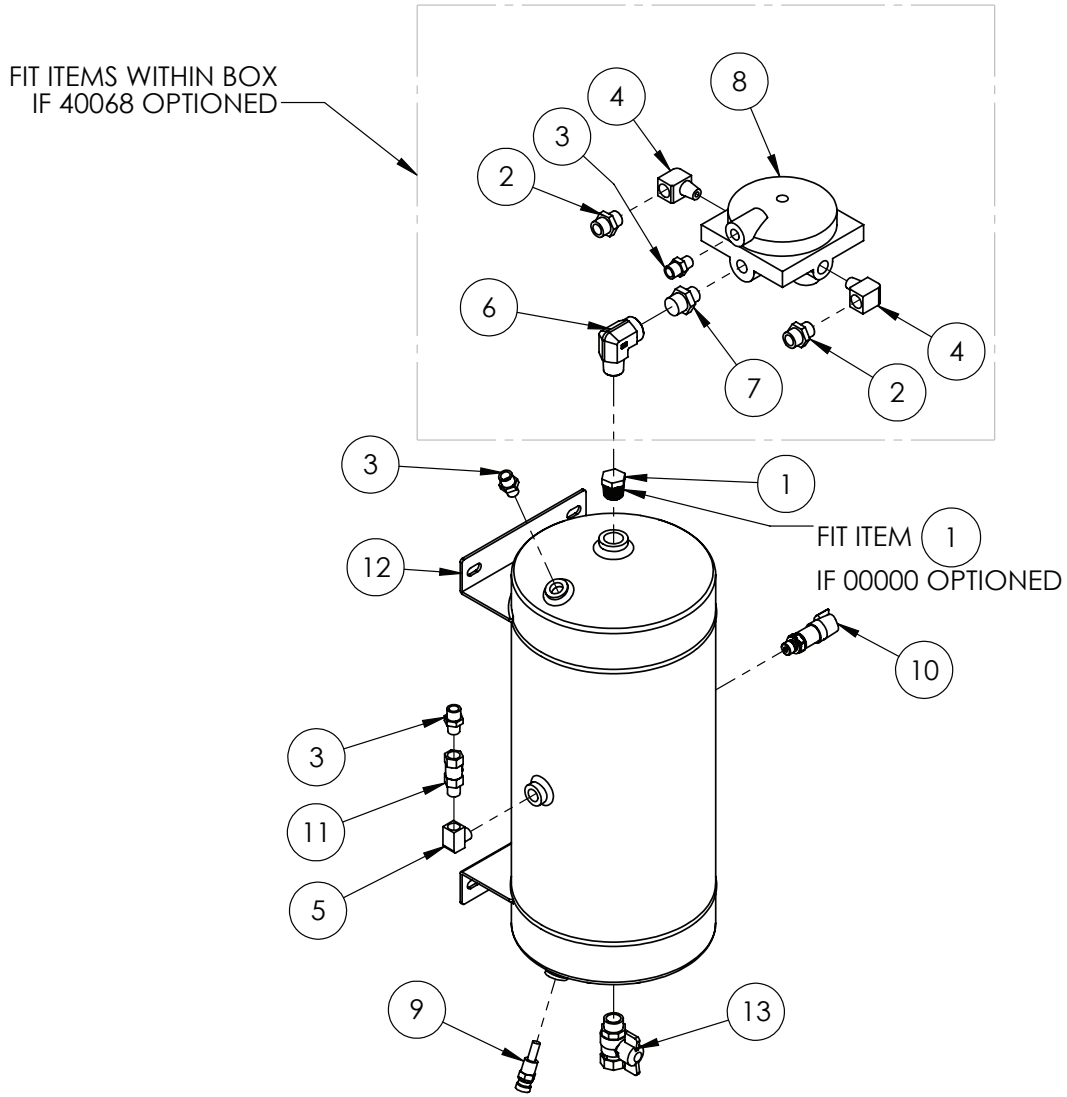

IF DESCRIPTION PREFIX IS ASSEMBLY DRAWING ONLY OR PRODUCTION DRAWING ONLY THE ITEM IS NOT FOR SALE			
ITEM	PART NUMBER	DESCRIPTION	QTY
1	GA5050670	1/2" BRASS PLUG	1
2	GA5079011	AIR FITTING, STRAIGHT, 12mm" TUBE, 3/8" MALE, PUSH IN, BRASS, ALKON - MAQ68-DOT-12X6	2
3	GA5078517	AIR FITTING, STRAIGHT, 3/8" TUBE, 1/4" NPT MALE, PUSH IN, BRASS, ALKON - AQ68-DOT-6X4	3
4	GA5079026	BRASS ELBOW, FEMALE 3/8", MALE 3/8", NPT, 233569	2
5	GA5025990	ELBOW, 90 DEGREE, 1/4" NPT MALE X 1/4" NPT FEMALE, BRASS	1
6	GA3500210	HYDRAULIC ADAPTOR, ELBOW, 90 DEGREE, 1/2" BSPT MALE X 1/2" BSPT FEMALE	1
7	GA5025951	NIPPLE, 1/2 MALE THREAD X 3/8 MALE THREAD, BRASS	1
8	GA7000094	PNEUMATIC BRAKE RELAY VALVE, R6 STYLE, 3/8 PORTS, ABC279180.	1
9	GA5017369	PRESSURE RELIEF VALVE	1
10	GA3000316	PRESSURE SENSOR TRANSDUCER, 0-25 BAR, 0.5-4.5V, IFM	1
11	GA5014796	SC3 SINGLE CHECK VALVE 1/4 M/F	1
12	GA5071940	TANK, AIR, 14.75L, PROTEX AT3	1
13	GA5020615	VALVE, BALL, 12mm, 1/2" MALE, FEMALE BUTTERFLY, BRASS	1
GA6101954 GOLDACRES		AIR TANK, PRIMARY, FRONT, SP	REV 00

BUILD OPTION:
40068 - FOUR WHEEL DRIVE (4WD) WITH FIXED WHEEL TRACK SET TO 2970MM
00000 - 2WD OPTION TO BE CONFIRMED

Air Tank Assembly, Secondary, Rear Brakes & Accessories

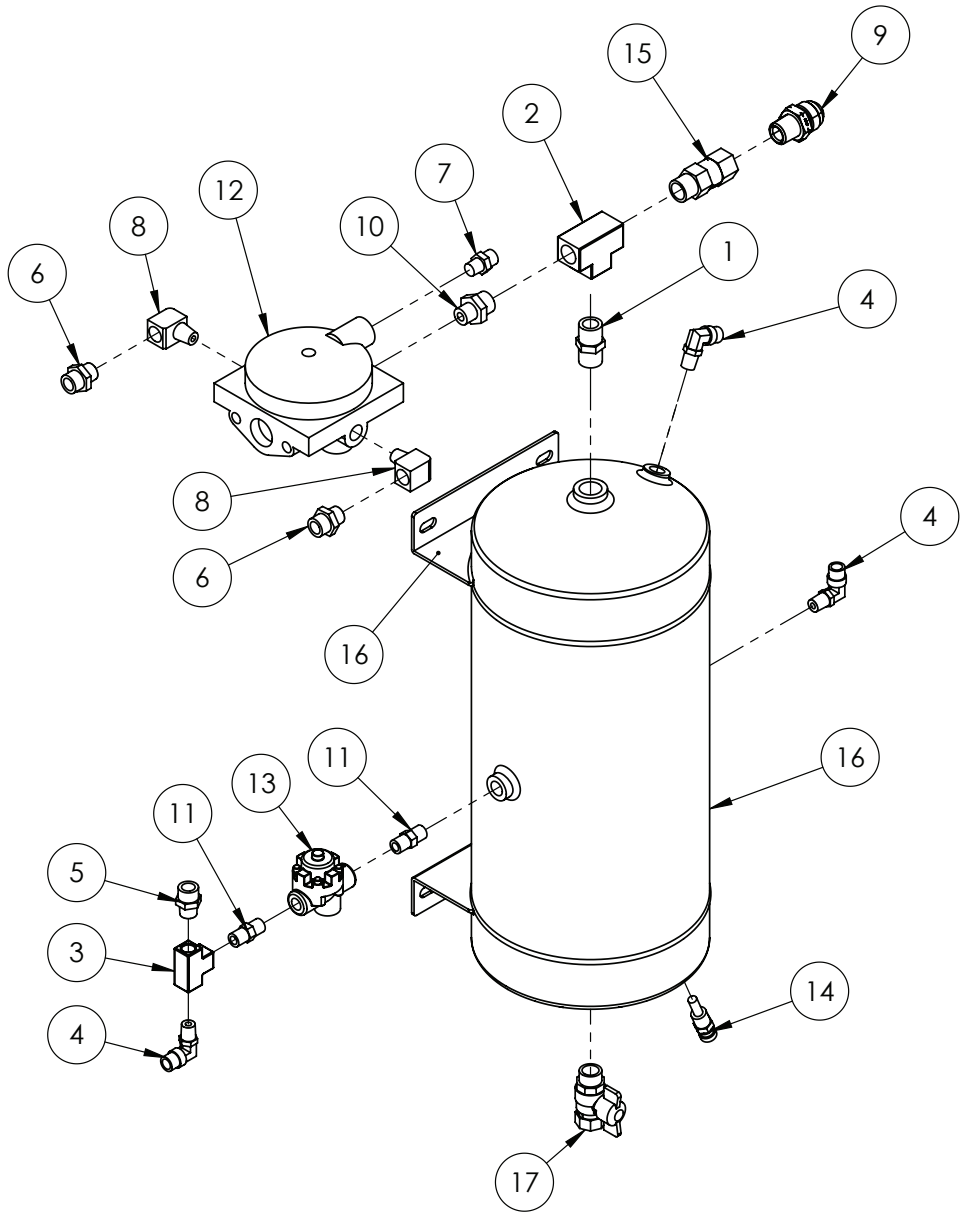

IF DESCRIPTION PREFIX IS ASSEMBLY DRAWING ONLY OR PRODUCTION DRAWING ONLY THE ITEM IS NOT FOR SALE			
ITEM	PART NUMBER	DESCRIPTION	QTY
1	GA5048310	1/2" BRASS NIPPLE	1
2	GA5079005	1/4 FEMALE BRASS TEE	1
3	GA5048300	1/4 FEMALE BRASS TEE	1
4	GA5078518	AIR FITTING, ELBOW, SWIVEL, 3/8" TUBE, 1/4" NPT MALE, PUSH IN, BRASS, ALKON - AQ69-DOTS-6X4	3
5	GA5079027	AIR FITTING, STRAIGHT, 12mm" TUBE, 1/4" MALE, PUSH IN, BRASS, ALKON - MAQ68-DOT-12X4	1
6	GA5079011	AIR FITTING, STRAIGHT, 12mm" TUBE, 3/8" MALE, PUSH IN, BRASS, ALKON - MAQ68-DOT-12X6	2
7	GA5078517	AIR FITTING, STRAIGHT, 3/8" TUBE, 1/4" NPT MALE, PUSH IN, BRASS, ALKON - AQ68-DOT-6X4	1
8	GA5079026	BRASS ELBOW, FEMALE 3/8", MALE 3/8", NPT, 233569	2
9	GA3501862	HYDRAULIC ADAPTER, NIPPLE, 1/2" NPT MALE X 1-1/16" JIC MALE, S7N-0817	1
10	GA5025951	NIPPLE, 1/2 MALE THREAD X 3/8 MALE THREAD, BRASS	1
11	GA5050285	NIPPLE, 1/4 MALE THREAD X 1/4 MALE THREAD, BRASS	2
12	GA7000094	PNEUMATIC BRAKE RELAY VALVE, R6 STYLE, 3/8 PORTS, ABC279180.	1
13	GA5013433	PRESSURE PROTECTION VALVE	1
14	GA5017369	PRESSURE RELIEF VALVE	1
15	GA5014795	SC3 SINGLE CHECK VALVE 1/2 M/F	1
16	GA5071940	TANK, AIR, 14.75L, PROTEX AT3	1
17	GA5020615	VALVE, BALL, 12mm, 1/2" MALE, FEMALE BUTTERFLY, BRASS	1
GA4909430 GOLDACRES		AIR TANK, SECONDARY, REAR AND ACCESSORIES, SP	REV 00

Park Brake Control Valve Assembly

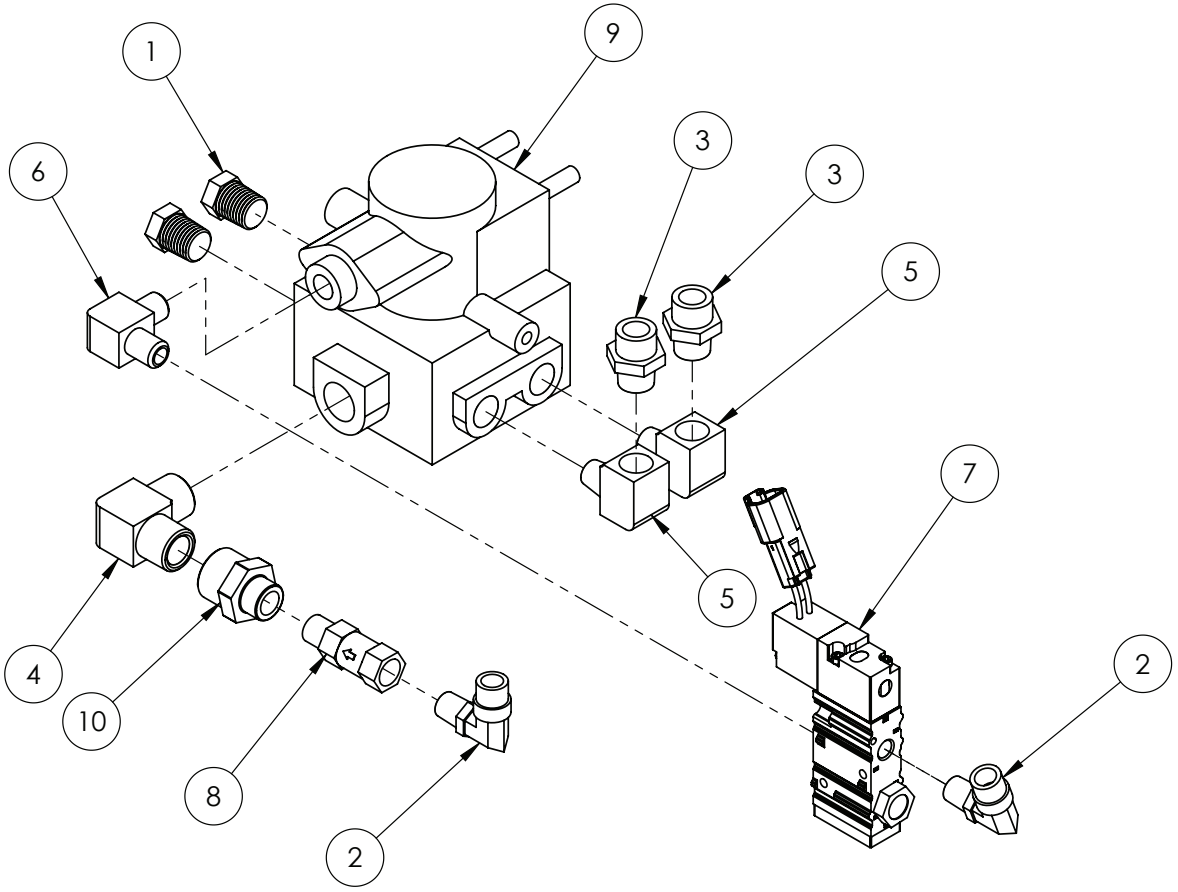

IF DESCRIPTION PREFIX IS ASSEMBLY DRAWING ONLY OR PRODUCTION DRAWING ONLY THE ITEM IS NOT FOR SALE			
ITEM	PART NUMBER	DESCRIPTION	QTY
1	GA5002575	3/8" BRASS PLUG	2
2	GA5078518	AIR FITTING, ELBOW, SWIVEL, 3/8" TUBE, 1/4" NPT MALE, PUSH IN, BRASS, ALKON - AQ69-DOTS-6X4	2
3	GA5079011	AIR FITTING, STRAIGHT, 12mm" TUBE, 3/8" MALE, PUSH IN, BRASS, ALKON - MAQ68-DOT-12X6	2
4	GA5023610	BRASS ELBOW 1/2 X 1/2 MALE THREAD	1
5	GA5079026	BRASS ELBOW, FEMALE 3/8", MALE 3/8", NPT, 233569	2
6	GA5008343	ELBOW MALE THREAD 1/4 X 1/4	1
7	GA7000093	PNEUMATIC SOLENOID VALVE MAC 52 SERIES, WITH DT, 1/4" PORTS NORMALY CLOSED 12V DC 5.4W 52A-11-D0A-DM-DDBA-1BA	1
8	GA5014796	SC3 SINGLE CHECK VALVE 1/4 M/F	1
9	GA7000105	SR-7 MODULATING VALVE, SPRING BRAKE, ANTI COMPOUNDING.	1
10	GA5078822	SOCKET, REDUCING, BRASS 1/2" BSP FEMALE X 1/4" BSP FEMALE, BF029-0804	1
GA4909439 GOLDACRES		PARK BRAKE CONTROL VALVE, 6 BAR HOLD OFF PRESSURE, LARGE FRAME S3	REV 00.A

Proportioning Valve Assembly

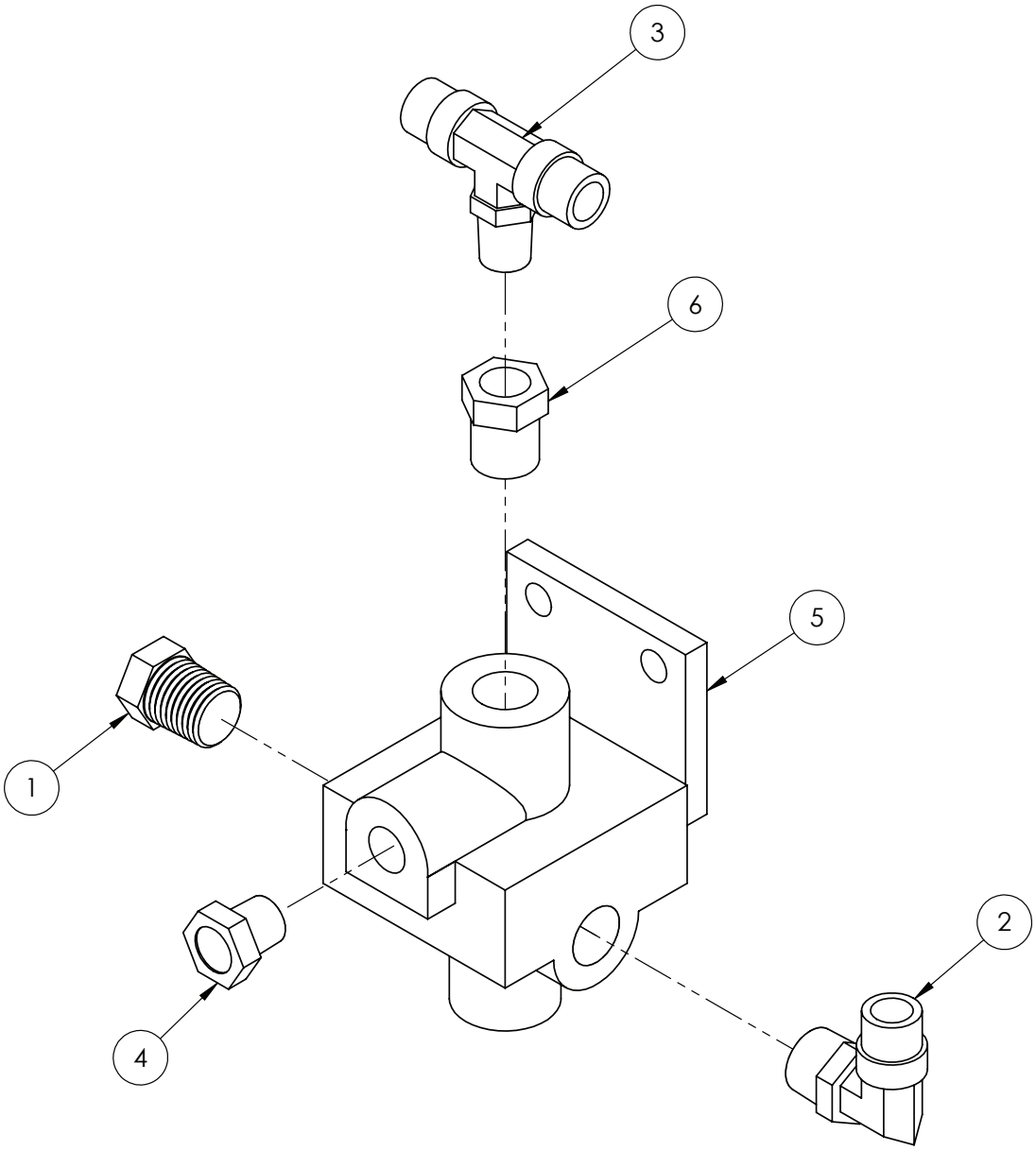

IF DESCRIPTION PREFIX IS ASSEMBLY DRAWING ONLY OR PRODUCTION DRAWING ONLY THE ITEM IS NOT FOR SALE			
ITEM	PART NUMBER	DESCRIPTION	QTY
1	GA5002575	3/8" BRASS PLUG	1
2	GA5078676	AIR FITTING, ELBOW, SWIVEL, 3/8" TUBE, 3/8" NPT MALE, PUSH IN, BRASS, ALKON - AQ69-DOTS-6X6	1
3	GA5078521	AIR FITTING, TEE, SWIVEL, 3/8" TUBE, 1/4" NPT MALE, PUSH IN, BRASS, ALKON - AQ72-DOTS-6X4	1
4	GA5071207	BREATHER, SILENCER, 1/4 BUTTON	1
5	GA5025908	PROPORTIONING VALVE, 50% PRESSURE REDUCTION, LQ2 STYLE	1
6	GA5049700	REDUCING BUSH 1/4" X 3/8"	1
GA4909441 GOLDACRES		PROPORTIONING VALVE, PRESSURE REDUCTION, BRAKES	REV 00

Pressure Reducing Valve Assembly, Brake Line, 4WD

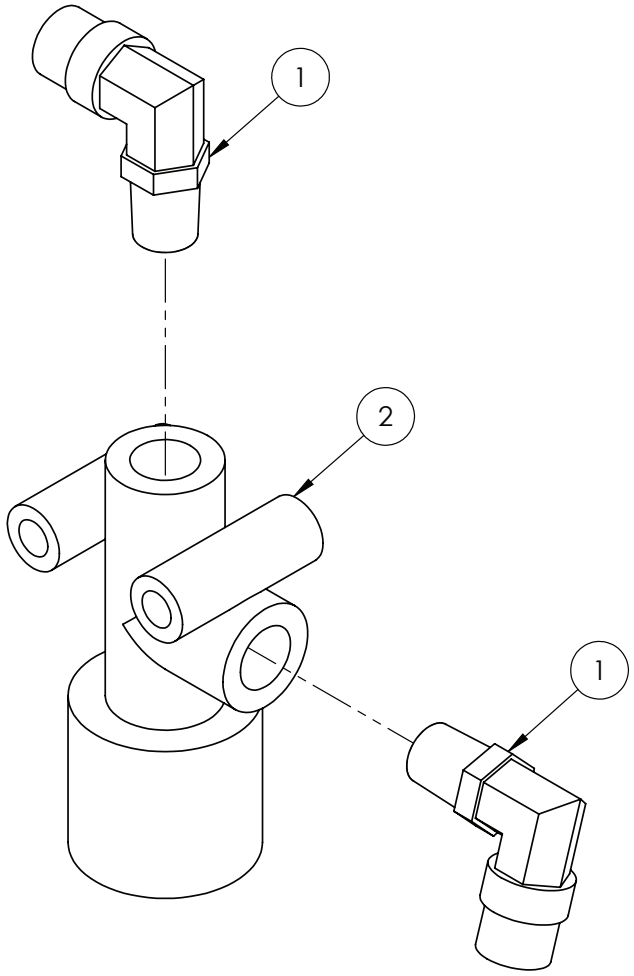

IF DESCRIPTION PREFIX IS ASSEMBLY DRAWING ONLY OR PRODUCTION DRAWING ONLY THE ITEM IS NOT FOR SALE			
ITEM	PART NUMBER	DESCRIPTION	QTY
1	GA5078518	AIR FITTING, ELBOW, SWIVEL, 3/8" TUBE, 1/4" NPT MALE, PUSH IN, BRASS, ALKON - AQ69-DOTS-6X4	2
2	GA7000121	PRESSURE REDUCING VALVE, RV1 STYLE, 6.5 BAR	1
GA4909567 GOLDACRES		BRAKE LINE PRESSURE REDUCING VALVE, 4X4 BRAKE SYSTEMS, LARGE FRAME SP S3	REV 00

Air Dryer Mounting

LH SIDE INNER VIEW

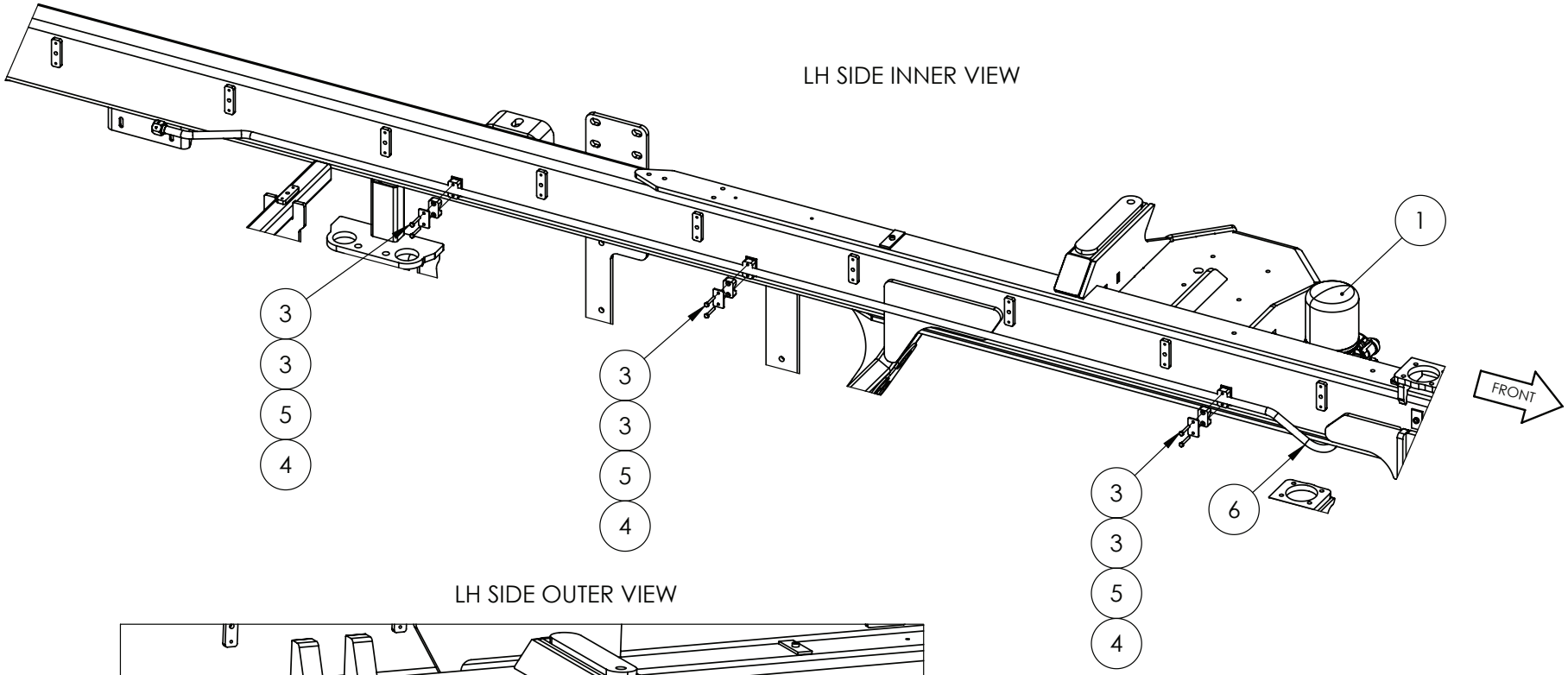

LH SIDE OUTER VIEW

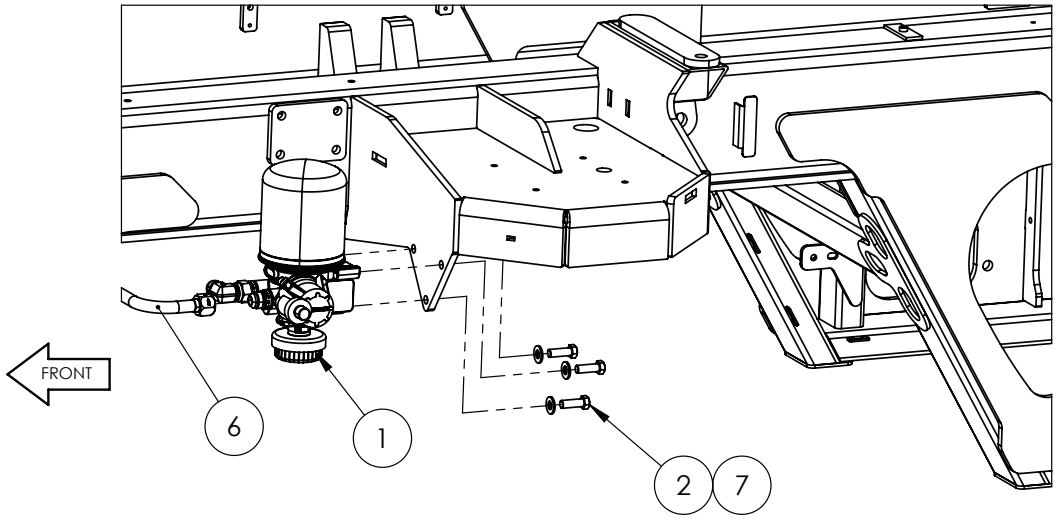

IF DESCRIPTION PREFIX IS ASSEMBLY DRAWING ONLY OR PRODUCTION DRAWING ONLY THE ITEM IS NOT FOR SALE			
ITEM	PART NUMBER	DESCRIPTION	QTY
1	GA4909484	AIR DRYER, ASSEMBLY, SINGLE CANISTER, WABCO 432 413 003 0	1
2	GA5006167	BOLT 1/2" UNC X 1 1/2" GR8 ZP	3
3	GA5004081	BOLT M6 X 40 GR8.8 ZP	6
4	GA5078059	MOUNTING CLAMP, SINGLE TYPE, JAW, PAIR, GROUP 3, 19mm, RCS-19J	3
5	GA5078072	MOUNTING CLAMP, SINGLE TYPE, PLATE, TOP, GROUP 3, RCS-3PT	3
6	GA7000113	PNEUMATIC PIPE, DRY AIR TO MAIN TANK, LF SP S3	1
7	GA5017673	WASHER 1/2" FLAT ZP HT YELLOW	3
GA7800285 GOLDACRES		ASSEMBLY DRAWING ONLY, AIR DRYER, LARGE FRAME S3	REV 00

Air Dryer Assembly

REPLACEMENT PARTS			
ITEM	PART NUMBER	DESCRIPTION	QTY
A	GA7000021	FILTER/SILENCER, AIR DRYER, WABCO 432.407.012.0	1

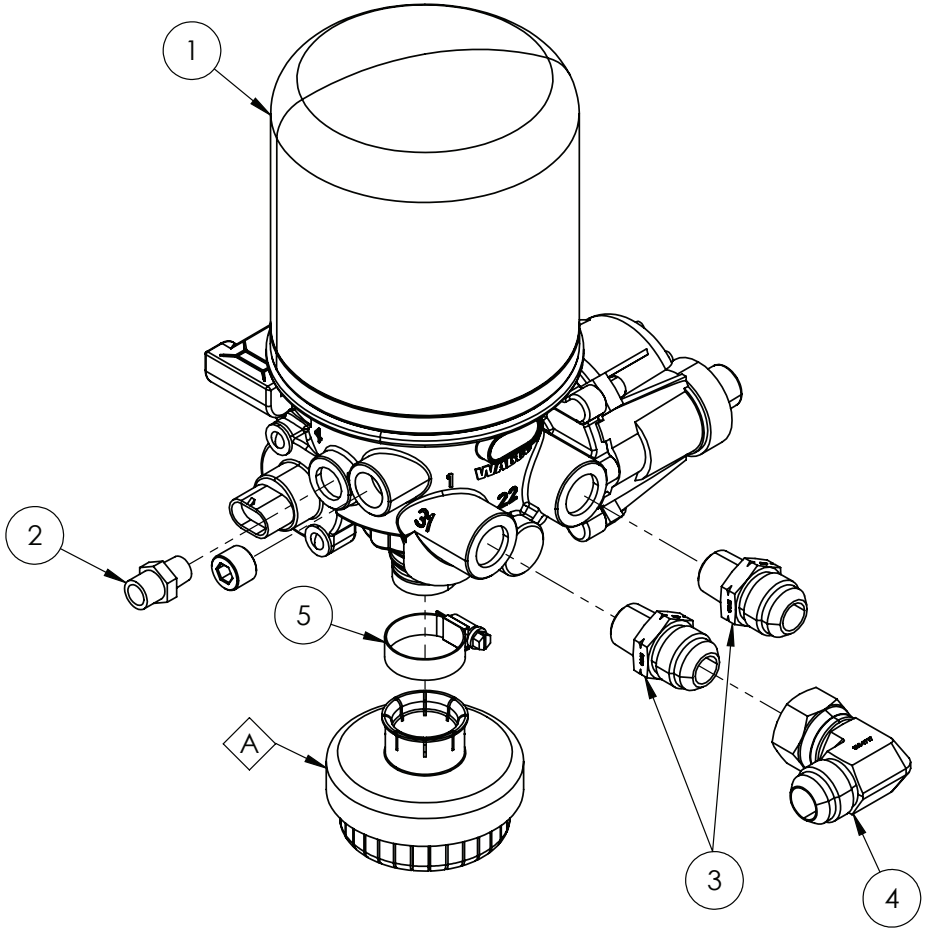

IF DESCRIPTION PREFIX IS ASSEMBLY DRAWING ONLY OR PRODUCTION DRAWING ONLY THE ITEM IS NOT FOR SALE			
ITEM	PART NUMBER	DESCRIPTION	QTY
1	GA5078551	AIR DRYER, SINGLE CANISTER, WABCO 432 413 003 10, C/W 3/8" HEX HEAD PLUG AND SILENCER	1
2	GA5078517	AIR FITTING, STRAIGHT, 3/8" TUBE, 1/4" NPT MALE, PUSH IN, BRASS, ALKON - AQ68-DOT-6X4	1
3	GA3501862	HYDRAULIC ADAPTER, NIPPLE, 1/2" NPT MALE X 1-1/16" JIC MALE, S7N-0817	2
4	GA3500823	HYDRAULIC ADAPTOR ELBOW, 1 1/16" JIC MALE X 1 1/16" JIC FEMALE SWIVEL, S15-1717	1
5	GA5016813	HOSE CLAMP, 1 SS LARGE (25-40/12W)	1
GA4909484 GOLDACRES		AIR DRYER, ASSEMBLY, SINGLE CANISTER, WABCO 432 413 003 0	REV 00

Air Bag Dump

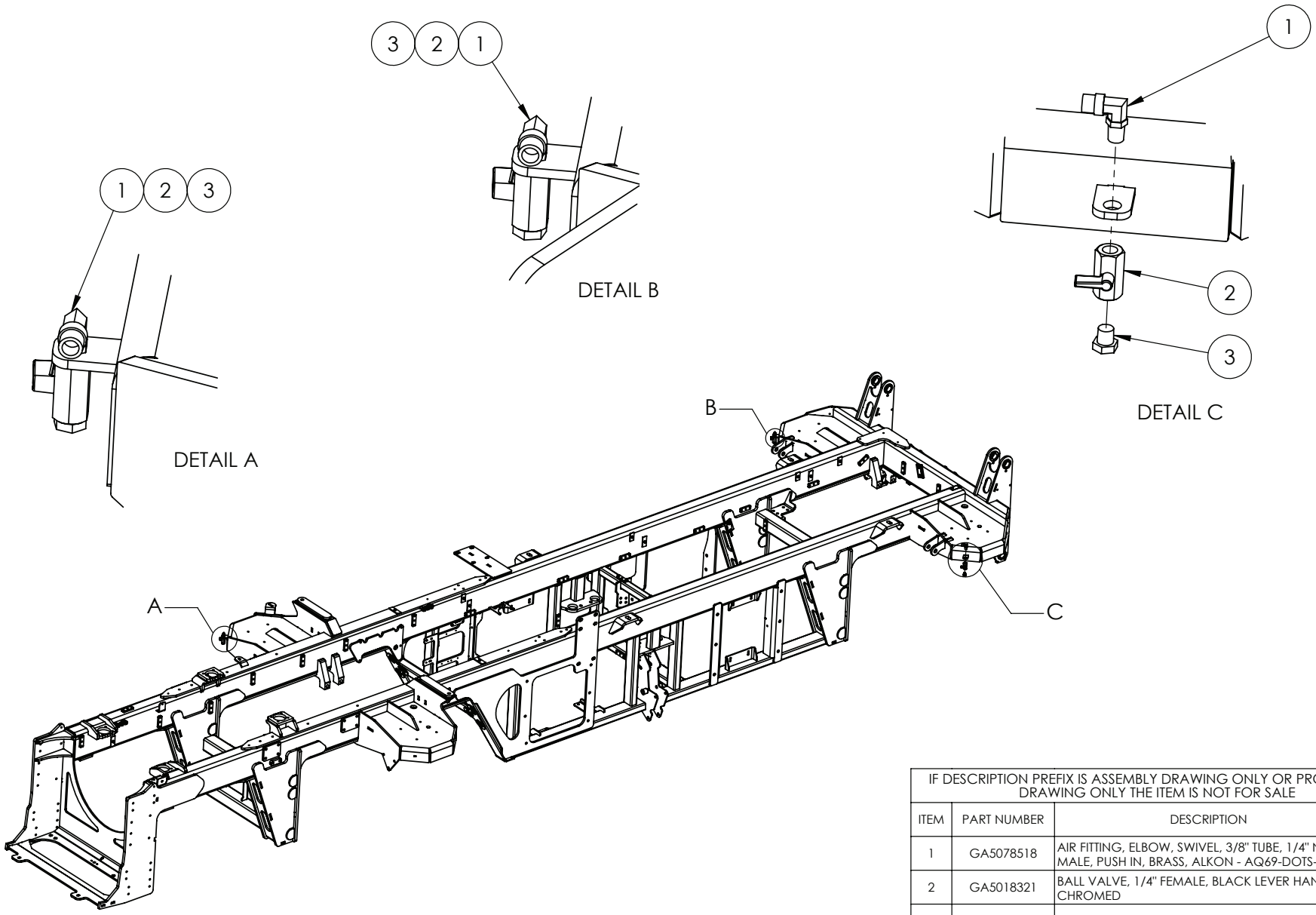

IF DESCRIPTION PREFIX IS ASSEMBLY DRAWING ONLY OR PRODUCTION DRAWING ONLY THE ITEM IS NOT FOR SALE			
ITEM	PART NUMBER	DESCRIPTION	QTY
1	GA5078518	AIR FITTING, ELBOW, SWIVEL, 3/8" TUBE, 1/4" NPT MALE, PUSH IN, BRASS, ALKON - AQ69-DOTS-6X4	3
2	GA5018321	BALL VALVE, 1/4" FEMALE, BLACK LEVER HANDLE, CHROMED	3
3	GA5071207	BREATHER, SILENCER, 1/4 BUTTON	3
GA7800286 GOLDACRES		ASSEMBLY DRAWING ONLY, AIR BAG DUMP VALVES, LARGE FRAME S3	REV 00

Access Platform Mounting, RH

NOTE:

FIT ITEM (2) IF 90070 OPTIONED

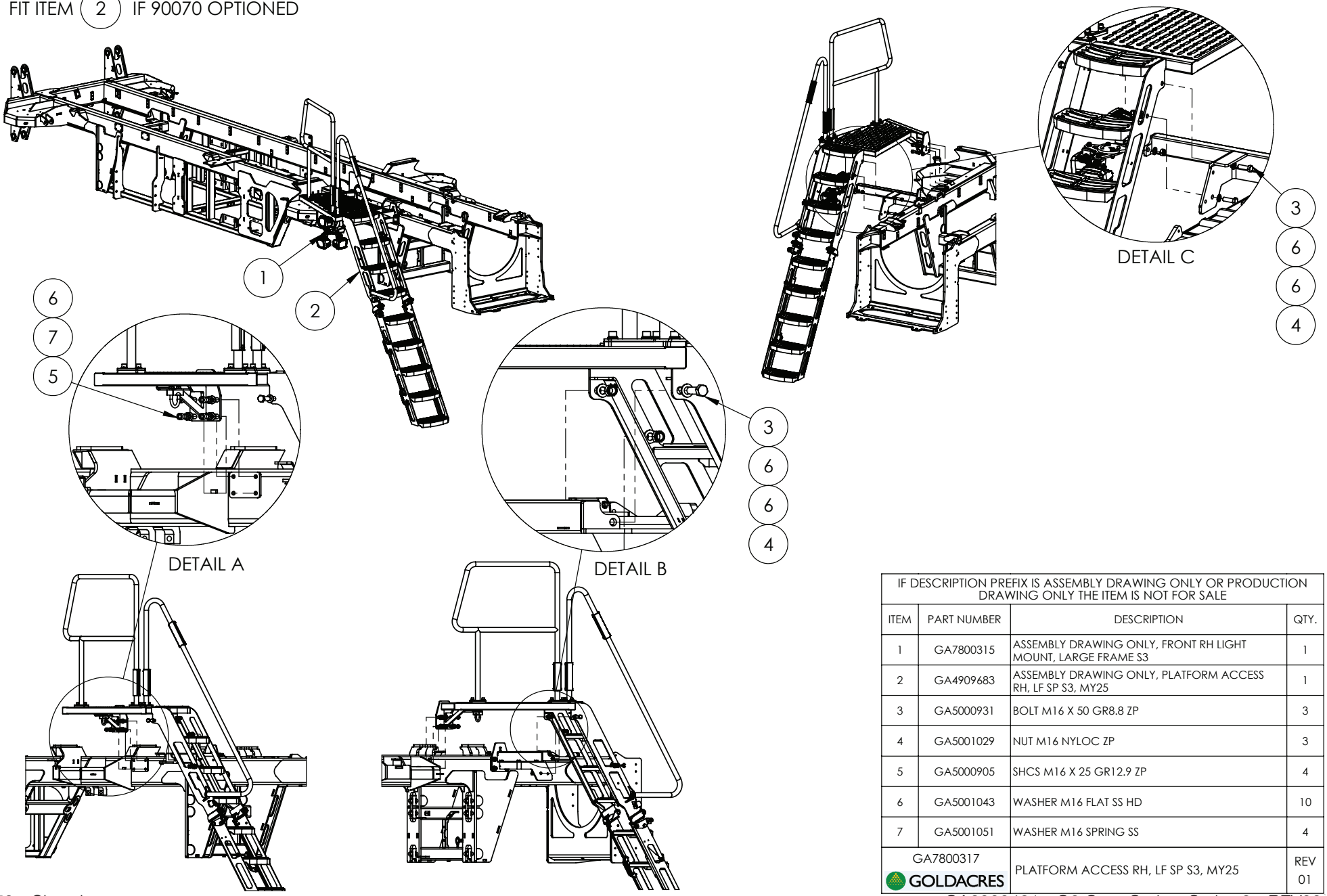

IF DESCRIPTION PREFIX IS ASSEMBLY DRAWING ONLY OR PRODUCTION DRAWING ONLY THE ITEM IS NOT FOR SALE			
ITEM	PART NUMBER	DESCRIPTION	QTY.
1	GA7800315	ASSEMBLY DRAWING ONLY, FRONT RH LIGHT MOUNT, LARGE FRAME S3	1
2	GA4909683	ASSEMBLY DRAWING ONLY, PLATFORM ACCESS RH, LF SP S3, MY25	1
3	GA5000931	BOLT M16 X 50 GR8.8 ZP	3
4	GA5001029	NUT M16 NYLOC ZP	3
5	GA5000905	SHCS M16 X 25 GR12.9 ZP	4
6	GA5001043	WASHER M16 FLAT SS HD	10
7	GA5001051	WASHER M16 SPRING SS	4
GA7800317 GOLDACRES		PLATFORM ACCESS RH, LF SP S3, MY25	REV 01

Work Light Mounting Arm, Front, RH

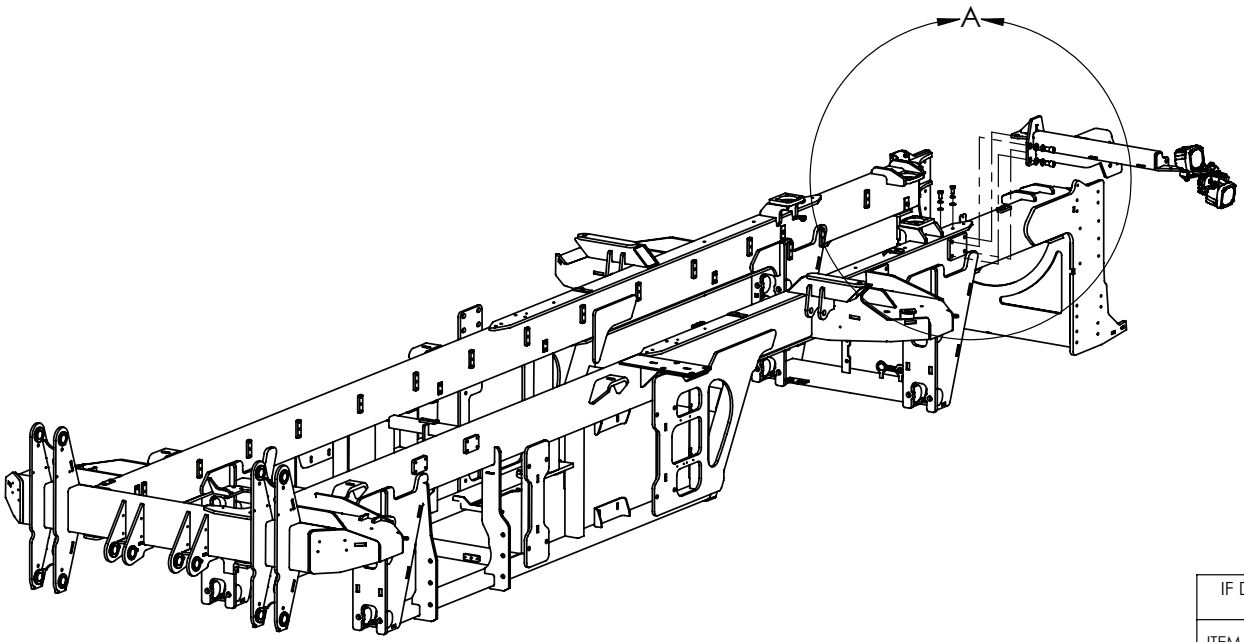

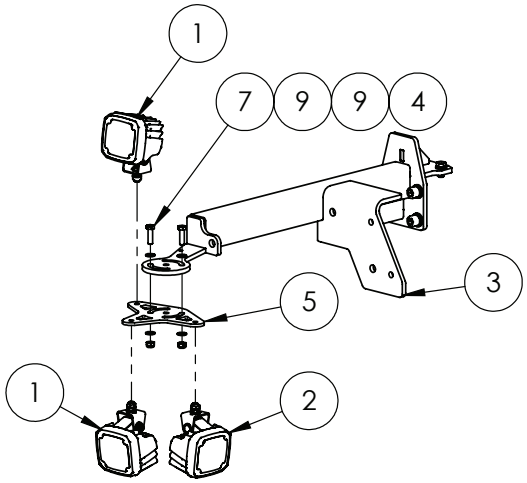

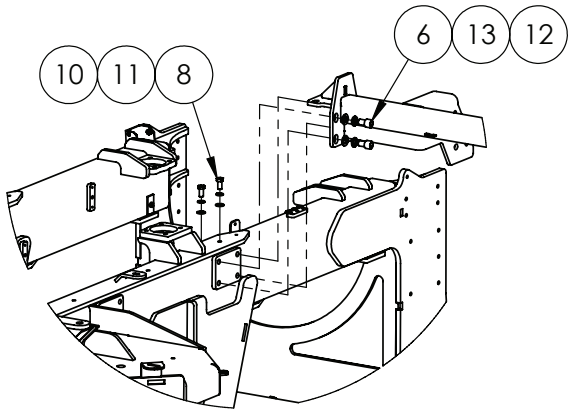

DETAIL A

IF DESCRIPTION PREFIX IS ASSEMBLY DRAWING ONLY OR PRODUCTION DRAWING ONLY THE ITEM IS NOT FOR SALE			
ITEM	PART NUMBER	DESCRIPTION	QTY
1	GA3001337	LIGHT, LED, FLOOD, ULTRA BEAM S SERIES, HELLA, 1GA 995 706-001	2
2	GA3001338	LIGHT, LED, SPOT, ULTRA BEAM S SERIES, HELLA, 1GA 995 706-011	1
3	GA4605046	MOUNT ARM, SPOT LED LIGHT/ISOLATOR MOUNT RH, LF SP S3	1
4	GA5000141	NUT M10 NYLOC ZP	2
5	GA4000644	PLATE, LIGHT MOUNT, 1 INTO 3, S3	1
6	GA5000905	SHCS M16 X 25 GR12.9 ZP	4
7	GA5006111	SET SCREW M10 X 35 GR8.8 ZP	2
8	GA5011229	SET SCREW M12 X 25 GR8.8 ZP	2
9	GA5000117	WASHER M10 FLAT SS HD	4
10	GA5000577	WASHER M12 FLAT SS HD	2
11	GA5000575	WASHER M12 SPRING SS	2
12	GA5001043	WASHER M16 FLAT SS HD	4
13	GA5001051	WASHER M16 SPRING SS	4
GA7800315 GOLDACRES		ASSEMBLY DRAWING ONLY, FRONT RH LIGHT MOUNT, LARGE FRAME S3	REV 00.A

Hand Rail Mounting, Access Platform, RH

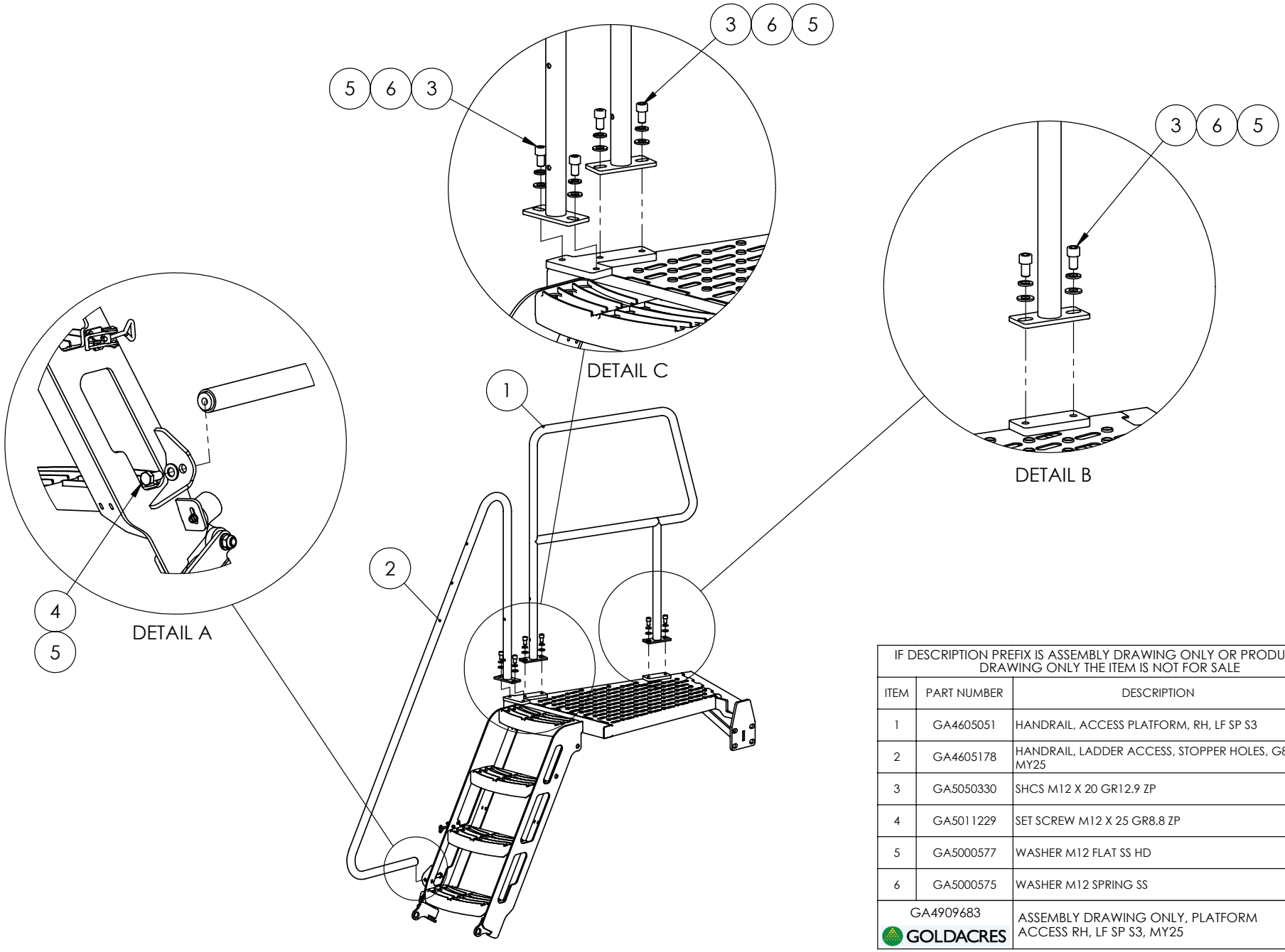

IF DESCRIPTION PREFIX IS ASSEMBLY DRAWING ONLY OR PRODUCTION DRAWING ONLY THE ITEM IS NOT FOR SALE			
ITEM	PART NUMBER	DESCRIPTION	QTY
1	GA4605051	HANDRAIL, ACCESS PLATFORM, RH, LF SP S3	1
2	GA4605178	HANDRAIL, LADDER ACCESS, STOPPER HOLES, G8 MY25	1
3	GA5050330	SHCS M12 X 20 GR12.9 ZP	6
4	GA5011229	SET SCREW M12 X 25 GR8.8 ZP	1
5	GA5000577	WASHER M12 FLAT SS HD	7
6	GA5000575	WASHER M12 SPRING SS	6
GA4909683 GOLDACRES		ASSEMBLY DRAWING ONLY, PLATFORM ACCESS RH, LF SP S3, MY25	REV 01

Access Platform, RH, Hose Guide Bracket & Door Stoppers

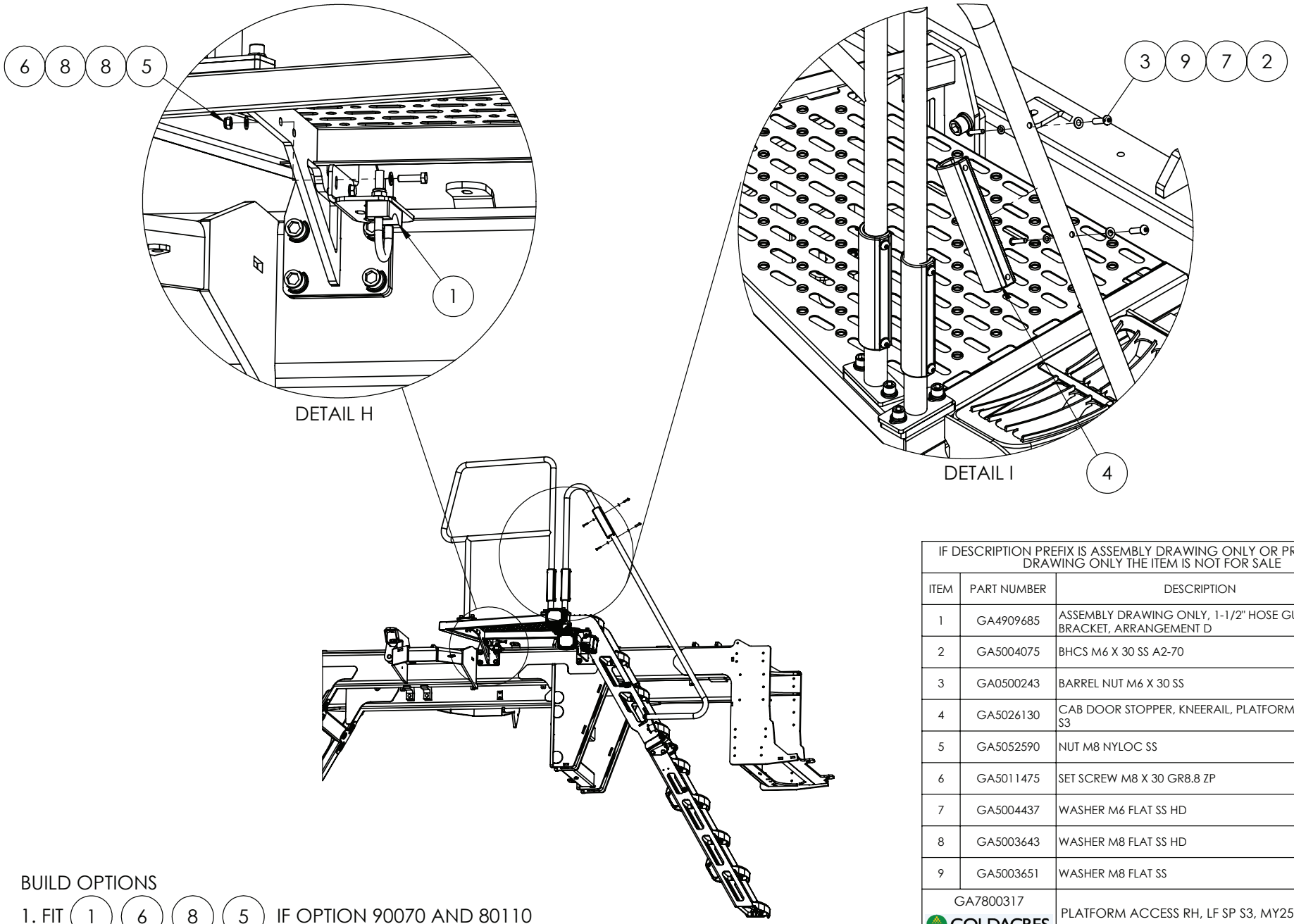

IF DESCRIPTION PREFIX IS ASSEMBLY DRAWING ONLY OR PRODUCTION DRAWING ONLY THE ITEM IS NOT FOR SALE			
ITEM	PART NUMBER	DESCRIPTION	QTY.
1	GA4909685	ASSEMBLY DRAWING ONLY, 1-1/2" HOSE GUIDE BRACKET, ARRANGEMENT D	1
2	GA5004075	BHCS M6 X 30 SS A2-70	6
3	GA0500243	BARREL NUT M6 X 30 SS	6
4	GA5026130	CAB DOOR STOPPER, KNEERAIL, PLATFORM, LF SP S3	3
5	GA5052590	NUT M8 NYLOC SS	2
6	GA5011475	SET SCREW M8 X 30 GR8.8 ZP	2
7	GA5004437	WASHER M6 FLAT SS HD	6
8	GA5003643	WASHER M8 FLAT SS HD	4
9	GA5003651	WASHER M8 FLAT SS	6
GA7800317 GOLDACRES		PLATFORM ACCESS RH, LF SP S3, MY25	REV 01

BUILD OPTIONS

1. FIT (1) (6) (8) (5) IF OPTION 90070 AND 80110

Access Platform, RH, Hose Guide Bracket Assembly

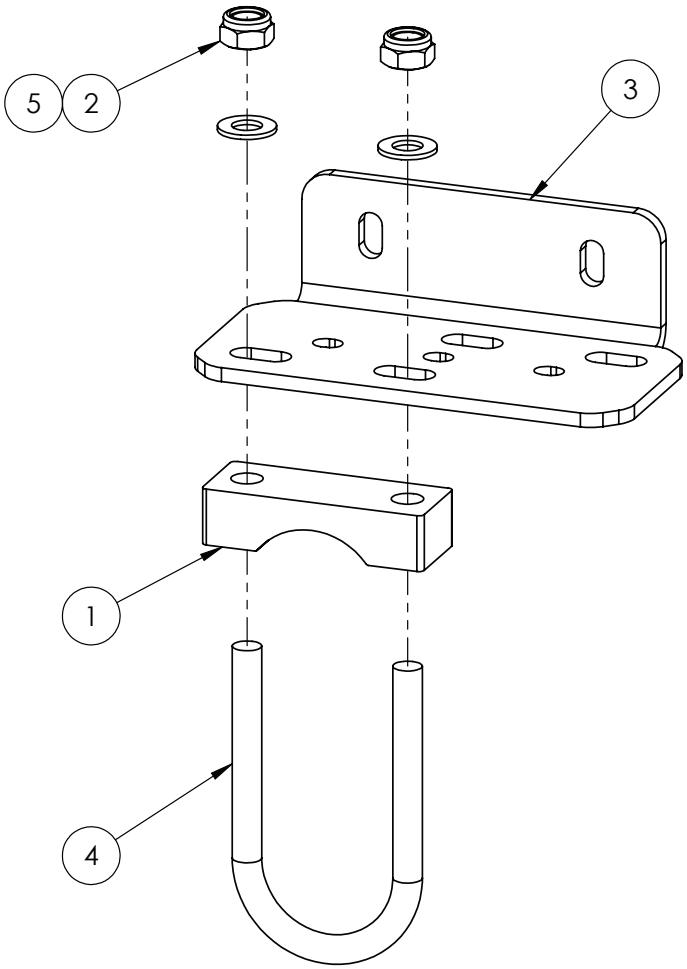

IF DESCRIPTION PREFIX IS ASSEMBLY DRAWING ONLY OR PRODUCTION DRAWING ONLY THE ITEM IS NOT FOR SALE			
ITEM	PART NUMBER	DESCRIPTION	QTY.
1	GA5026542	CLAMP, U-BOLT SUPPORT, HYDAC, 1.5"	1
2	GA0500222	NUT M10 NYLOC GAL	2
3	GA4000784	PLATE, HOSE GUIDE BRACKET, 1-1/2", 90 DEGREE MOUNT	1
4	GA0500220	U BOLT, ROUND TOP, M10 X 48 X 100	1
5	GA0500223	WASHER M10 FLAT GAL	2
GA4909685 GOLDACRES		ASSEMBLY DRAWING ONLY, 1-1/2" HOSE GUIDE BRACKET, ARRANGEMENT D	REV 00

BRACKET FOR OPTION 65215 OR 65216

Access Platform, RH, Ladder Assembly

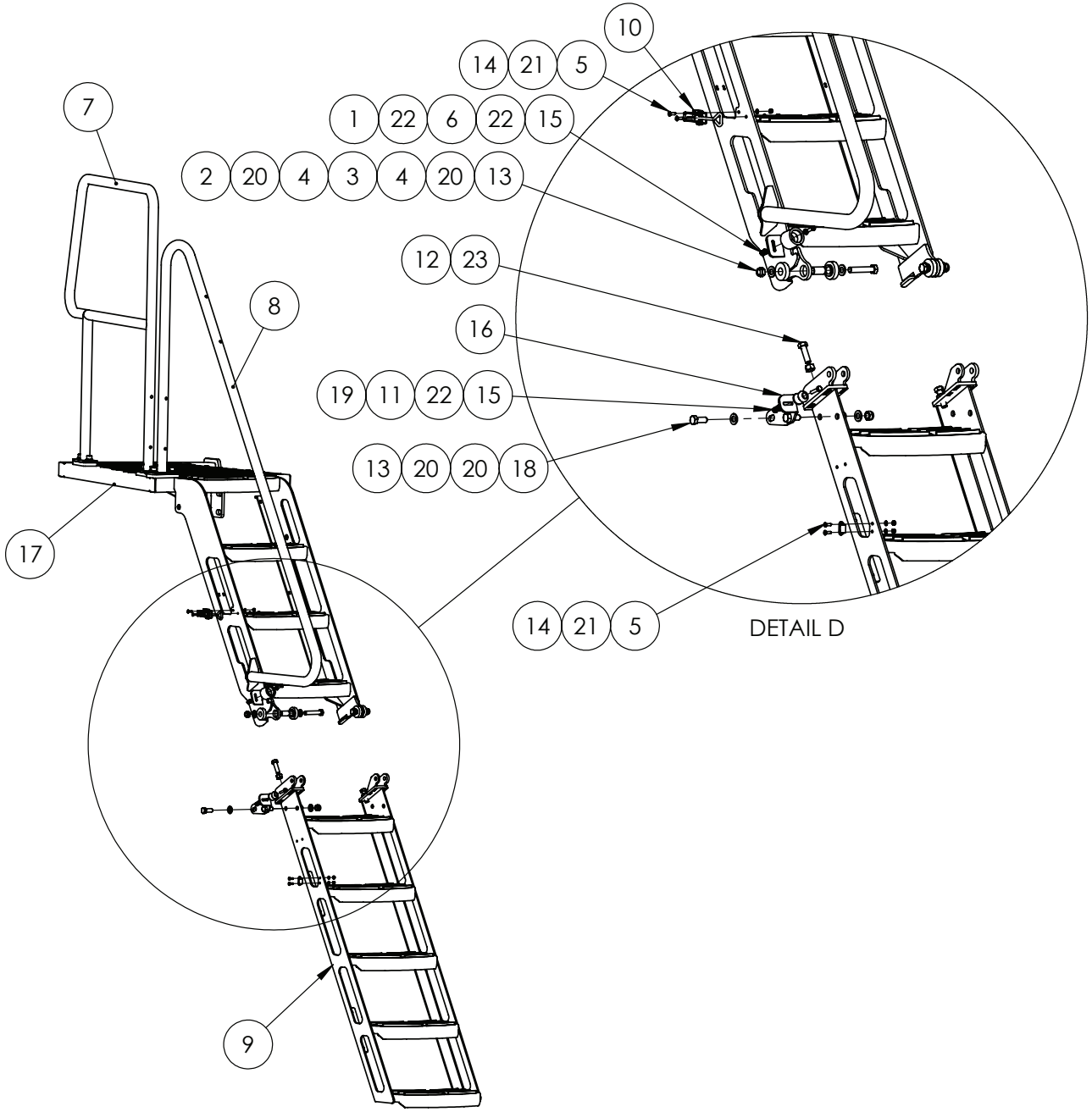

IF DESCRIPTION PREFIX IS ASSEMBLY DRAWING ONLY OR PRODUCTION DRAWING ONLY THE ITEM IS NOT FOR SALE			
ITEM	PART NUMBER	DESCRIPTION	QTY
1	GA5004053	BHCS M6 X 20 SS A2-70	1
2	GA5000339	BOLT M12 X 65 GR8.8 ZP	2
3	GA4553025	BUSH LADDER PIVOT SP MY13	2
4	GA4553030	BUSH NYLON LADDER PIVOT SP MY13	4
5	GA5051230	CSCS M5 X 16 SS A2-70	4
6	GA5008629	FEMALE RUBBER DOOR HOLDER (BLACK)	1
7	GA4605051	HANDRAIL, ACCESS PLATFORM, RH, LF SP S3	1
8	GA4605178	HANDRAIL, LADDER ACCESS, STOPPER HOLES, G8 MY25	1
9	GA4603695	LADDER, G4 G6 G8, CABIN ACCESS, MY21	1
10	GA5007071	LATCH, INDUCTION HOPPER LID, STAINLESS STEEL	1
11	GA5011607	MALE RUBBER DOOR HOLDER	1
12	GA5000559	NUT M12 HEX ZP	2
13	GA5012461	NUT M12 NYLOC ZP	4
14	GA5003974	NUT M5 NYLOC ZP	4
15	GA5048115	NUT M6 NYLOC ZP	2
16	GA4408115	PLATE, LOWER LADDER, RH RUBBER HOLDER MOUNT, RH PLATFORM, G6, MY20	1
17	GA4605047	PLATFORM ACCESS FABRICATION, RH, LF SP S3	1
18	GA5000305	SET SCREW M12 X 30 GR8.8 ZP	2
19	GA5004079	SET SCREW M6 X 30 GR8.8 ZP	1
20	GA5000577	WASHER M12 FLAT SS HD	9
21	GA5003983	WASHER M5 FLAT SS	4
22	GA5004437	WASHER M6 FLAT SS HD	3
23	GA5000319	SET SCREW M12 X 40 GR8.8 ZP	2
GA4909683 GOLDACRES		ASSEMBLY DRAWING ONLY, PLATFORM ACCESS RH, LF SP S3, MY25	REV 01

Access Platform, RH, Ladder Handles

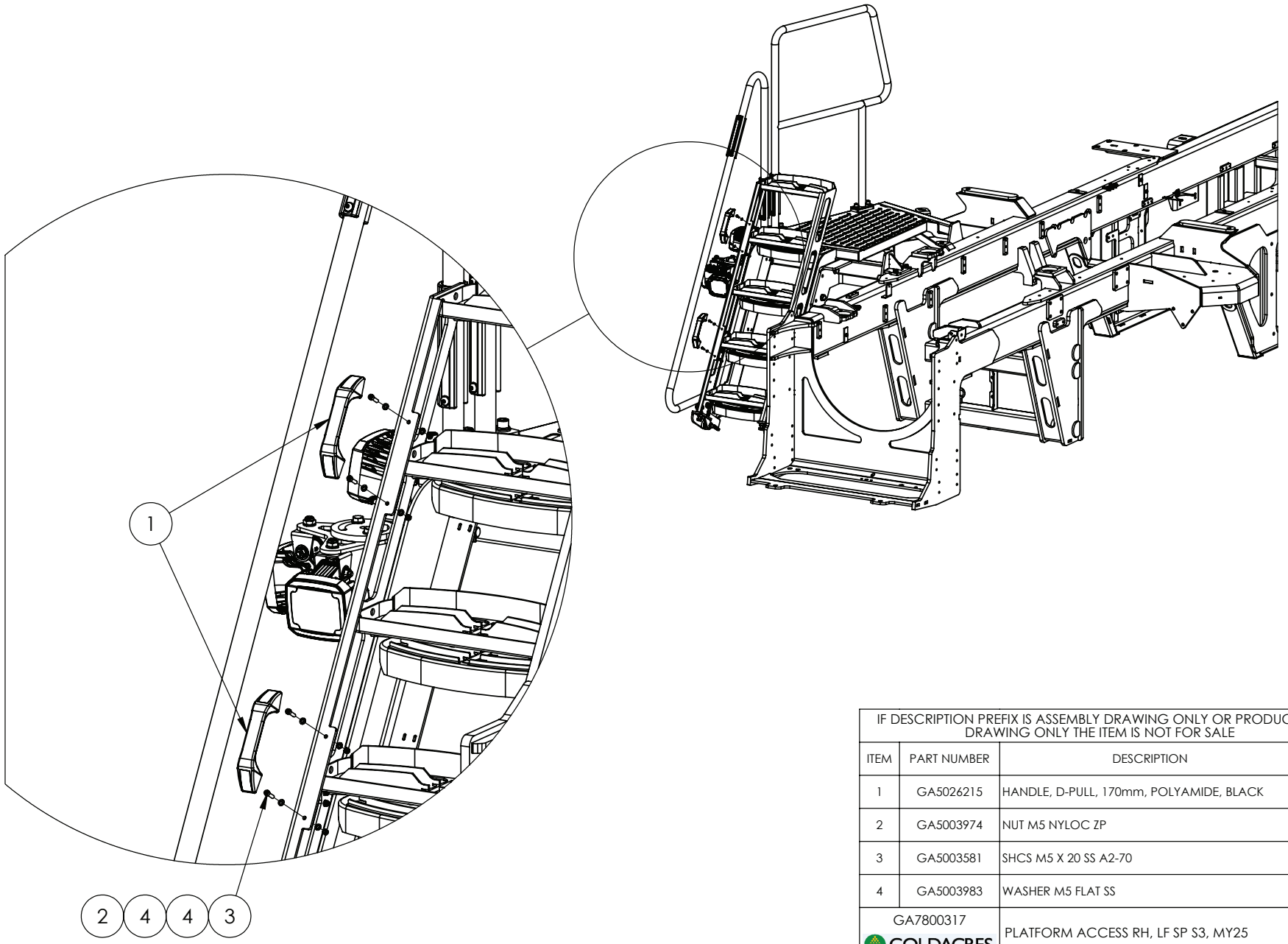

IF DESCRIPTION PREFIX IS ASSEMBLY DRAWING ONLY OR PRODUCTION DRAWING ONLY THE ITEM IS NOT FOR SALE			
ITEM	PART NUMBER	DESCRIPTION	QTY
1	GA5026215	HANDLE, D-PULL, 170mm, POLYAMIDE, BLACK	2
2	GA5003974	NUT M5 NYLOC ZP	4
3	GA5003581	SHCS M5 X 20 SS A2-70	4
4	GA5003983	WASHER M5 FLAT SS	8
GA7800317 GOLDACRES		PLATFORM ACCESS RH, LF SP S3, MY25	REV 01

Access Platform Mounting, LH

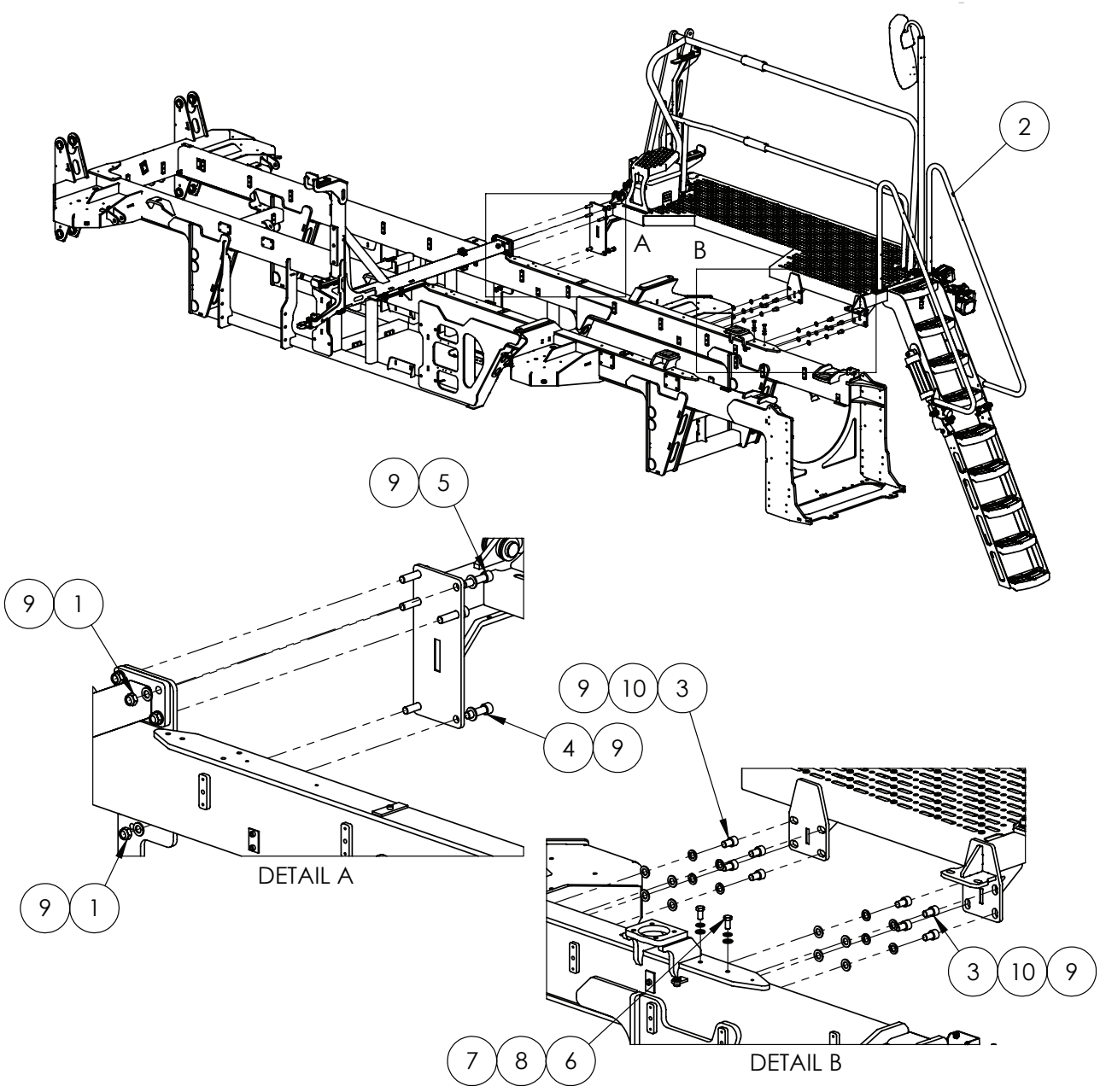

IF DESCRIPTION PREFIX IS ASSEMBLY DRAWING ONLY OR PRODUCTION DRAWING ONLY THE ITEM IS NOT FOR SALE			
ITEM	PART NUMBER	DESCRIPTION	QTY
1	GA5001029	NUT M16 NYLOC ZP	10
2	GA6101950	PRODUCTION DRAWING ONLY, PLATFORM, LH CABIN ACCESS, LF SP S3	1
3	GA5000905	SHCS M16 X 25 GR12.9 ZP	8
4	GA5003687	SHCS M16 X 55 GR 12.9 ZP	2
5	GA0500090	SHCS M16 X 65 GR 12.9 ZP	4
6	GA5011229	SET SCREW M12 X 25 GR8.8 ZP	2
7	GA5000577	WASHER M12 FLAT SS HD	2
8	GA5000575	WASHER M12 SPRING SS	2
9	GA5001043	WASHER M16 FLAT SS HD	28
10	GA5001051	WASHER M16 SPRING SS	8
GA7800267 GOLDACRES		ASSEMBLY DRAWING ONLY, PLATFORM & BOOM REST ASSEMBLY, LARGE FRAME S3	REV 00

Access Platform, LH, Ladder Assembly

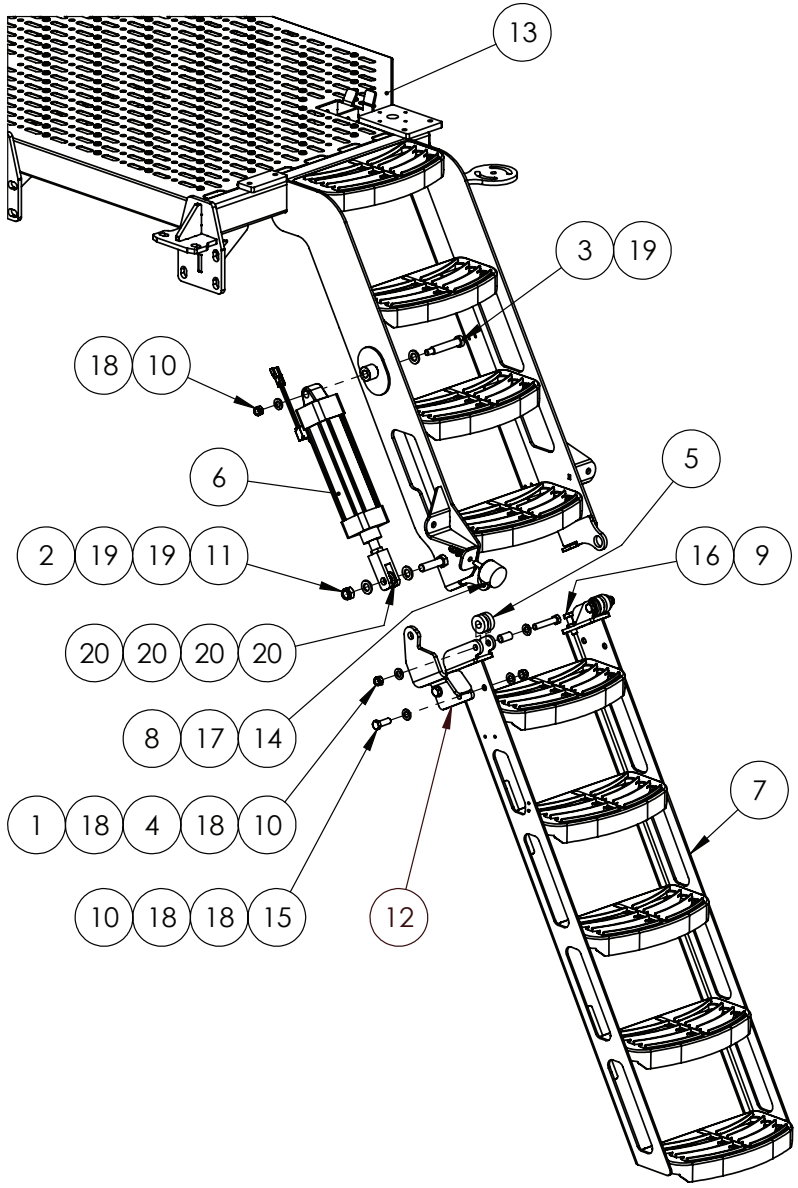

IF DESCRIPTION PREFIX IS ASSEMBLY DRAWING ONLY OR PRODUCTION DRAWING ONLY THE ITEM IS NOT FOR SALE			
ITEM	PART NUMBER	DESCRIPTION	QTY
1	GA5000339	BOLT M12 X 65 GR8.8 ZP	2
2	GA5000941	BOLT M16 X 60 GR8.8 ZP	1
3	GA5069165	BOLT SHOULDER SHCS M16 X 80 GR12.9 ZP	1
4	GA4553025	BUSH LADDER PIVOT SP MY13	2
5	GA4553030	BUSH NYLON LADDER PIVOT SP MY13	4
6	GA4949445	CYLINDER, PNEUMATIC, LADDER, ASSEMBLY	1
7	GA4603695	LADDER, G4 G6 G8, CABIN ACCESS, MY21	1
8	GA5000141	NUT M10 NYLOC ZP	1
9	GA5071280	NUT M12 HEX HALF ZP	2
10	GA5012461	NUT M12 NYLOC ZP	5
11	GA5001029	NUT M16 NYLOC ZP	1
12	GA4603700	PLATE, LADDER CYLINDER MOUNT, LH FITMENT, MY21	1
13	GA4605025	PLATFORM, LH ACCESS, LF SP S3	1
14	GA5052815	RUBBER STOPPER, DIAMETER 50 X 35 LONG, WITH M10 X 35 STUD	1
15	GA5000311	SET SCREW M12 X 35 GR8.8 ZP	2
16	GA5000319	SET SCREW M12 X 40 GR8.8 ZP	2
17	GA5000117	WASHER M10 FLAT SS HD	1
18	GA5000577	WASHER M12 FLAT SS HD	9
19	GA5001043	WASHER M16 FLAT SS HD	3
20	GA5069810	WASHER M16X30X2 NYLON	4
GA6101950 GOLDACRES		PRODUCTION DRAWING ONLY, PLATFORM, LH CABIN ACCESS, LF SP S3	REV 00

Cylinder Assembly, Pneumatic, Ladder

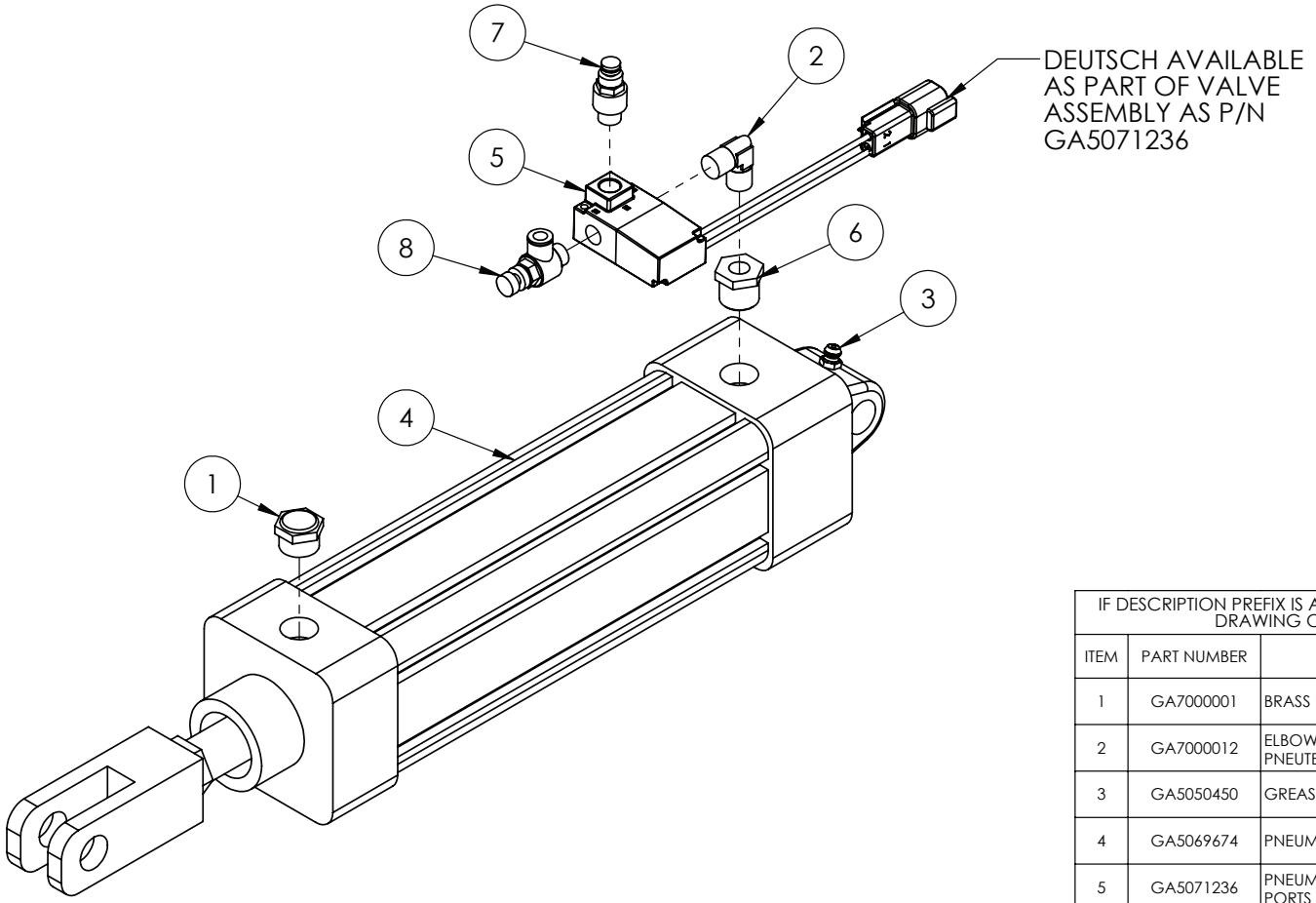

IF DESCRIPTION PREFIX IS ASSEMBLY DRAWING ONLY OR PRODUCTION DRAWING ONLY THE ITEM IS NOT FOR SALE			
ITEM	PART NUMBER	DESCRIPTION	QTY
1	GA7000001	BRASS BREATHER SILENCER 3/8 BSP FLAT	1
2	GA7000012	ELBOW, 1/8" BSP, MALE TO MALE, 0914 00 10, PNEUTECH	1
3	GA5050450	GREASE NIPPLE, 6mm	1
4	GA5069674	PNEUMATIC CYLINDER 63 X 175mm	1
5	GA5071236	PNEUMATIC SOLENOID VALVE MAC 35 SERIES 1/8" PORTS WITH DEUTSCH CONNECTOR	1
6	GA7000011	REDUCING BUSH, 3/8" BSPP – 1/8 BSPP", 0904 10 17, PNEUTECH	1
7	GA7000014	RESTRICTOR, ADJUSTABLE EXHAUST, ET-01, PNEUTECH	1
8	GA7000013	VALVE, FLOW CONTROL 6mm X 1/8 BSP, METER IN, JSC6-01B, PNEUTECH	1
GA4949445 GOLDACRES		CYLINDER, PNEUMATIC, LADDER, ASSEMBLY	REV 01

Boom Rest, LH Mounting, RIVX

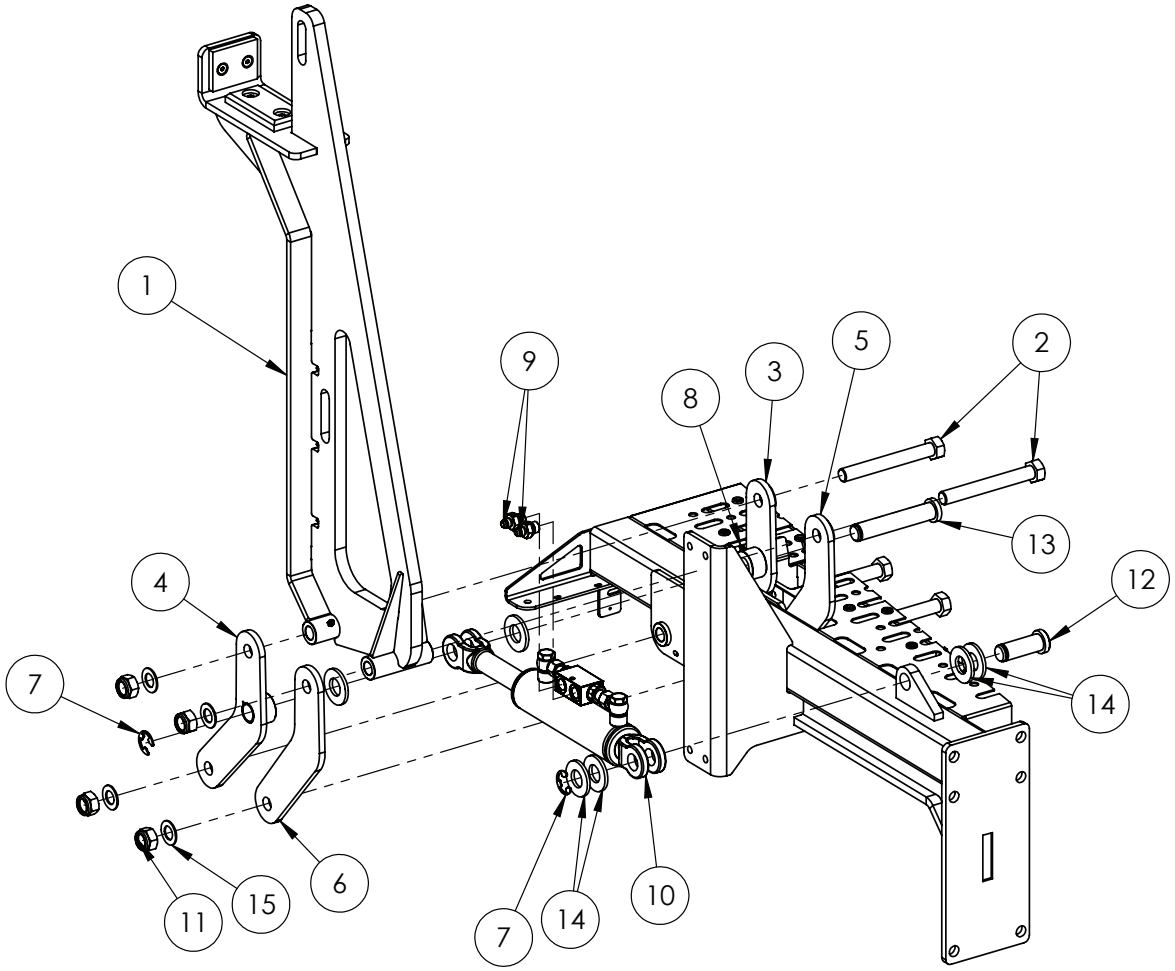

HIDDEN GREASE NIPPLE LOCATIONS

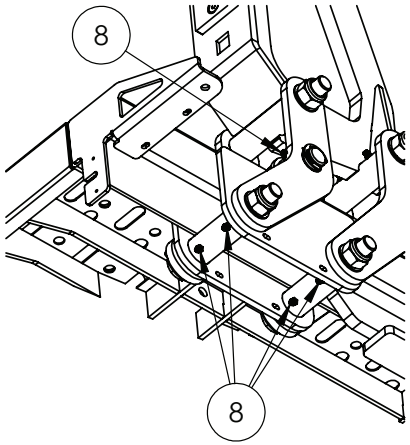

IF DESCRIPTION PREFIX IS ASSEMBLY DRAWING ONLY OR PRODUCTION DRAWING ONLY THE ITEM IS NOT FOR SALE			
ITEM	PART NUMBER	DESCRIPTION	QTY
1	GA4909432	ASSEMBLY DRAWING ONLY, BOOM REST ASSEMBLY, RIVX, LH, LF SP S3	1
2	GA0500225	BOLT M20 X 160 GR8.8 ZP	4
3	GA4605007	BOOM REST LINKAGE A, LF SP S2	1
4	GA4605008	BOOM REST LINKAGE B, LF SP S3	1
5	GA4605006	BOOM REST LINKAGE C, LF SP S3	1
6	GA4000034	BOOM REST LINKAGE D, LF SP S3	1
7	GA5001223	CIRCLIP, 19mm, E TYPE, ZINC PLATED	2
8	GA5050450	GREASE NIPPLE, 6mm	6
9	GA3500145	HYDRAULIC ADAPTOR, 3/8" BSPPOM, 9/16" JICM, NIPPLE, S74-0609, RYCO	2
10	GA3501840	HYDRAULIC CYLINDER, BORE 2", ROD 1.25", STROKE 6", INTERGRATED PILOT CHECK VALVE	1
11	GA5048125	NUT M20 NYLOC ZP	4
12	L054A	PIN WITH SHOULDER AND CIRCLIP GROOVE, 1" DIAMETER X 71 LONG	1
13	GA4552835	PIN- HYD CYLINDER TO BOOM REST SP 2011	1
14	GA5017659	WASHER 1" FLAT ZP HD	6
15	GA5001742	WASHER M20 FLAT SS 2.0mm	4
GA6101950 GOLDACRES		PRODUCTION DRAWING ONLY, PLATFORM, LH CABIN ACCESS, LF SP S3	REV 00

Boom Rest, LH, RIVX

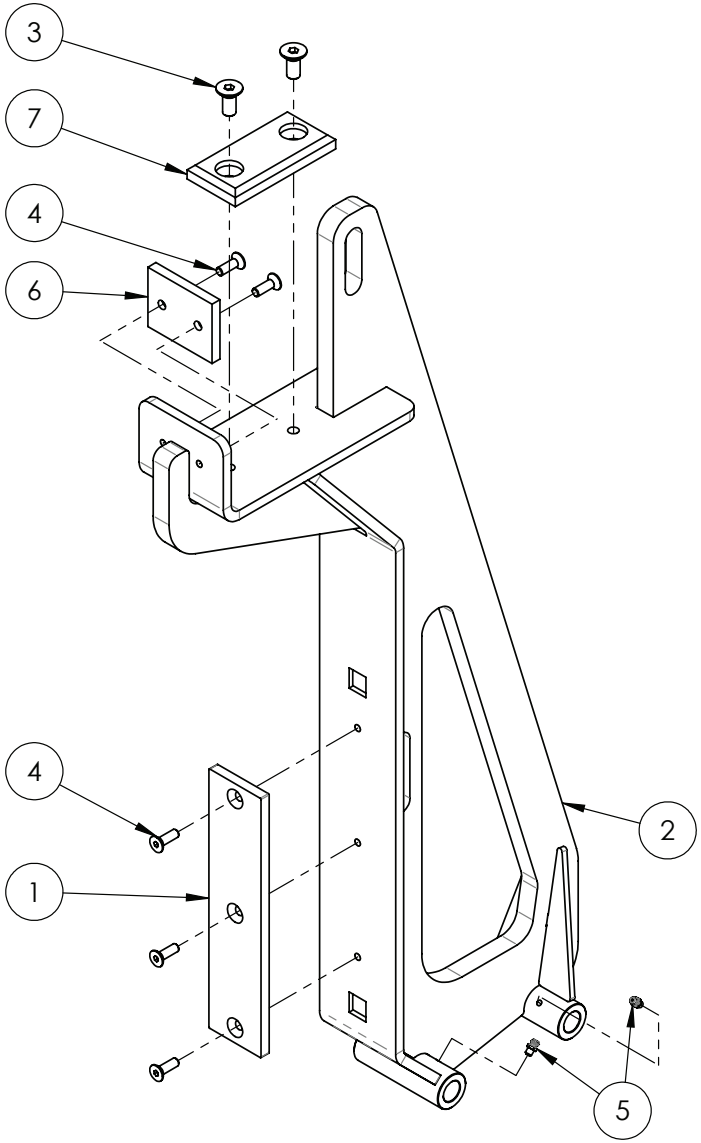

IF DESCRIPTION PREFIX IS ASSEMBLY DRAWING ONLY OR PRODUCTION DRAWING ONLY THE ITEM IS NOT FOR SALE			
ITEM	PART NUMBER	DESCRIPTION	QTY
1	GA5073730	BOOM REST WEAR PAD, G6 MY20	1
2	GA4605003	BOOM REST, RIVX, LH, LF SP S3	1
3	GA5070860	CSCS M12 X 20 GR12.9 ZP	2
4	GA0500014	CSCS M8 X 20 GR12.9 ZP	5
5	GA5050450	GREASE NIPPLE, 6mm	4
6	GA4550730	PLASTIC WEAR STRIP, BOOM REST SADDLE, G3V G4V	1
7	GA4550055	WEAR SLIDE PLATE BOOM REST BOTTOM 2015	1
GA4909432 GOLDACRES		ASSEMBLY DRAWING ONLY, BOOM REST ASSEMBLY, RIVX, LH, LF SP S3	REV 00

Boom Rest, LH, Mounting, 48mt

10195 - 48M OPTION

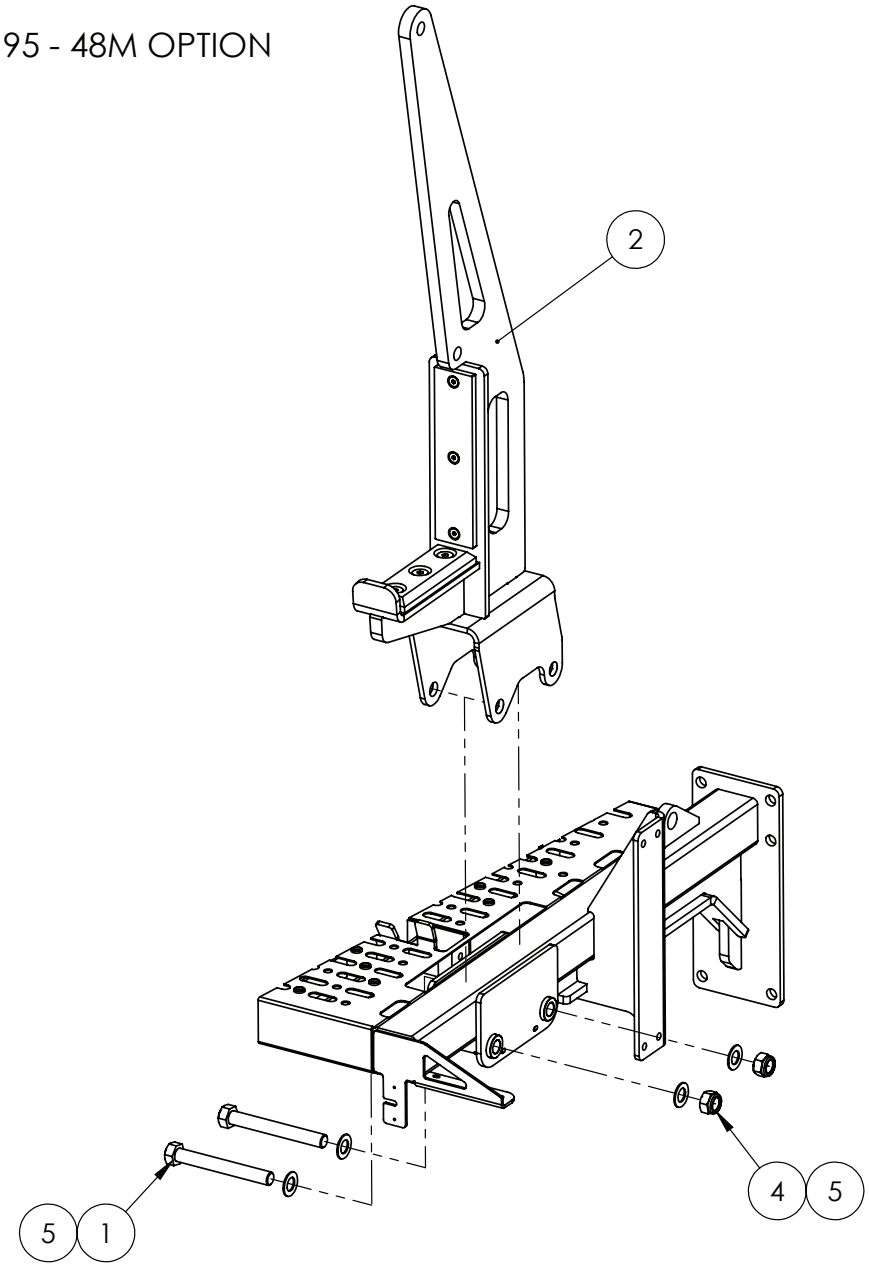

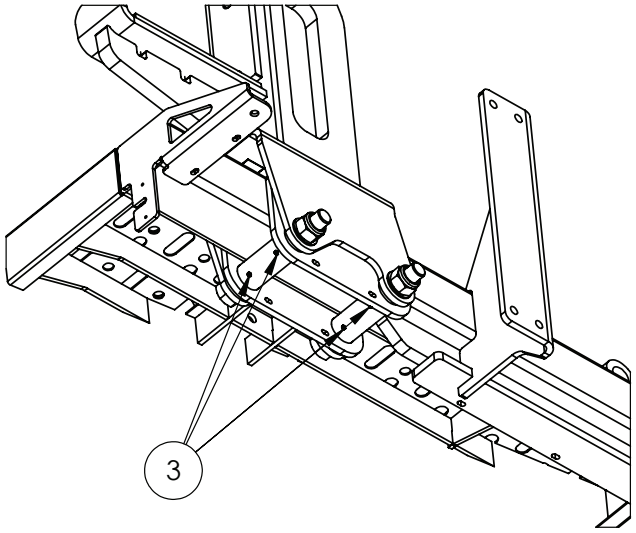

HIDDEN GRUB SCREWS

IF DESCRIPTION PREFIX IS ASSEMBLY DRAWING ONLY OR PRODUCTION DRAWING ONLY THE ITEM IS NOT FOR SALE			
ITEM	PART NUMBER	DESCRIPTION	QTY
1	GA0500225	BOLT M20 X 160 GR8.8 ZP	2
2	GA4909433	BOOM REST ASSEMBLY, TRITECH 48M, LH, LF SP S3	1
3	GA0500238	GRUB SCREW, M6 X 8mm, UNI 5923 45H	4
4	GA5048125	NUT M20 NYLOC ZP	2
5	GA5001742	WASHER M20 FLAT SS 2.0mm	4
GA6101950 GOLDACRES		PRODUCTION DRAWING ONLY, PLATFORM, LH CABIN ACCESS, LF SP S3	REV 00

Boom Rest, LH 48mt

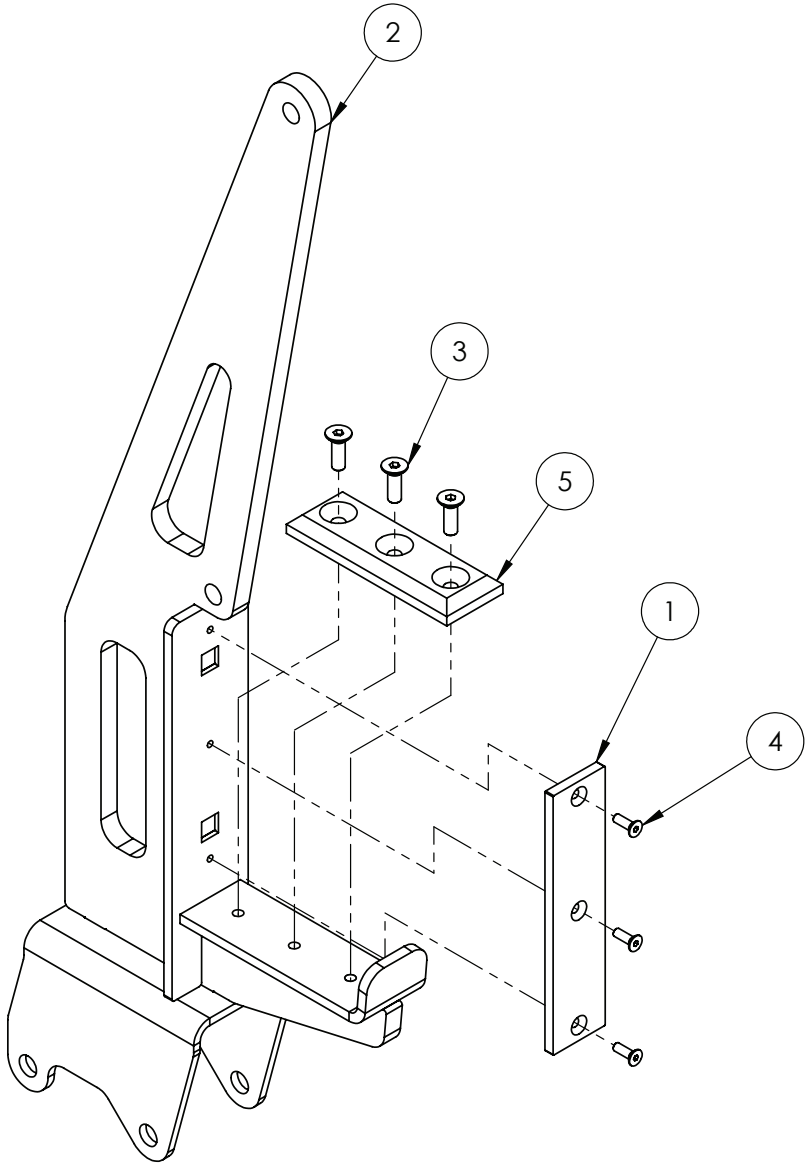

IF DESCRIPTION PREFIX IS ASSEMBLY DRAWING ONLY OR PRODUCTION DRAWING ONLY THE ITEM IS NOT FOR SALE			
ITEM	PART NUMBER	DESCRIPTION	QTY
1	GA5073730	BOOM REST WEAR PAD, G6 MY20	1
2	GA4605004	BOOM REST, TRITECH 48M, LH, LF SP S3	1
3	GA5051290	CSCS M12 X 30 GR12.9 ZP	3
4	GA0500014	CSCS M8 X 20 GR12.9 ZP	3
5	GA4550795	PLASTIC WEAR PAD, LOWER, BOOM REST, 48M BOOM	1
GA4909433 GOLDACRES		BOOM REST ASSEMBLY, TRITECH 48M, LH, LF SP S3	REV 00.A

Tread Step, Access Platform

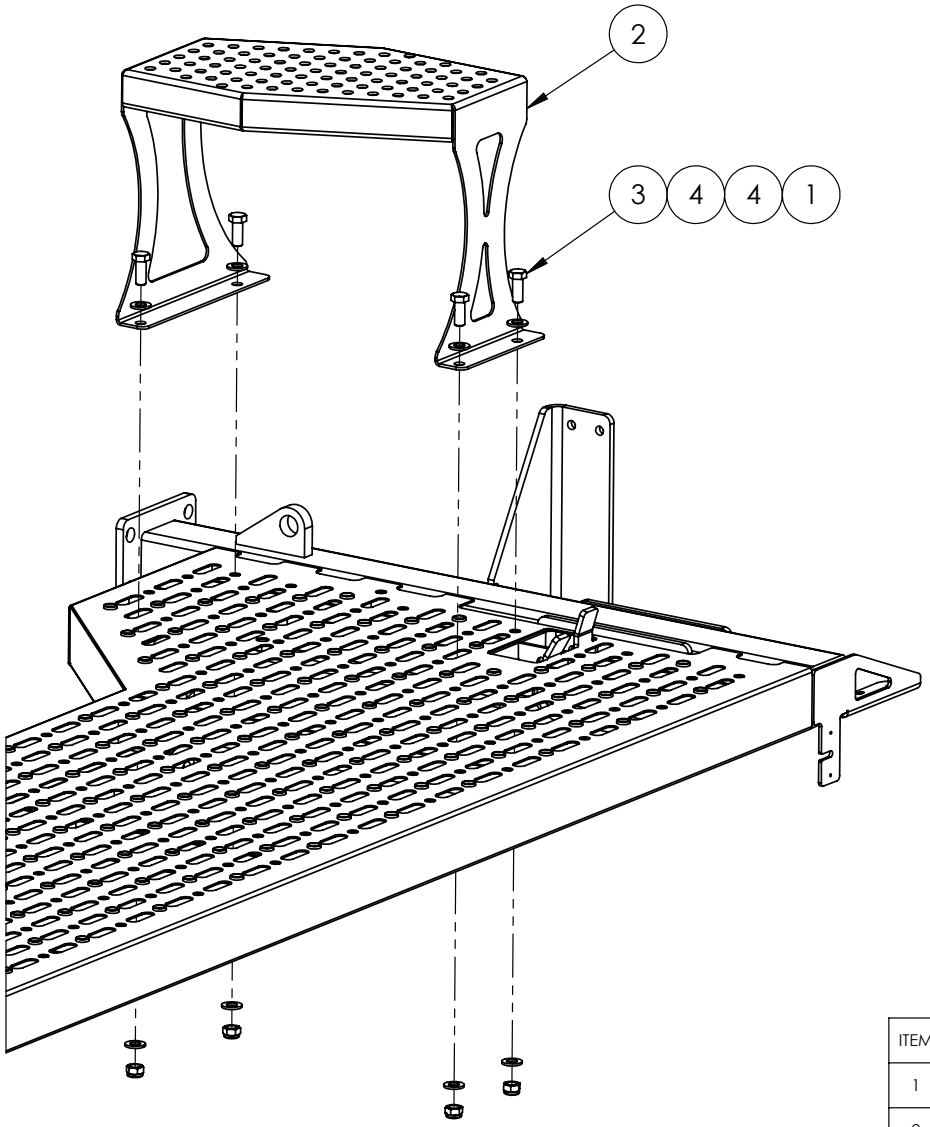

ITEM	PART NUMBER	DESCRIPTION	QTY
1	GA5012461	NUT M12 NYLOC ZP	4
2	GA4000152	PLATE, TREAD STEP, BOLT ON, PLATFORM, LF SP S3	1
3	GA5000305	SET SCREW M12 X 30 GR8.8 ZP	4
4	GA5000577	WASHER M12 FLAT SS HD	8
GA6101950 GOLDACRES		PRODUCTION DRAWING ONLY, PLATFORM, LH CABIN ACCESS, LF SP S3	REV 00

Hand Rail Assembly, Access Platform

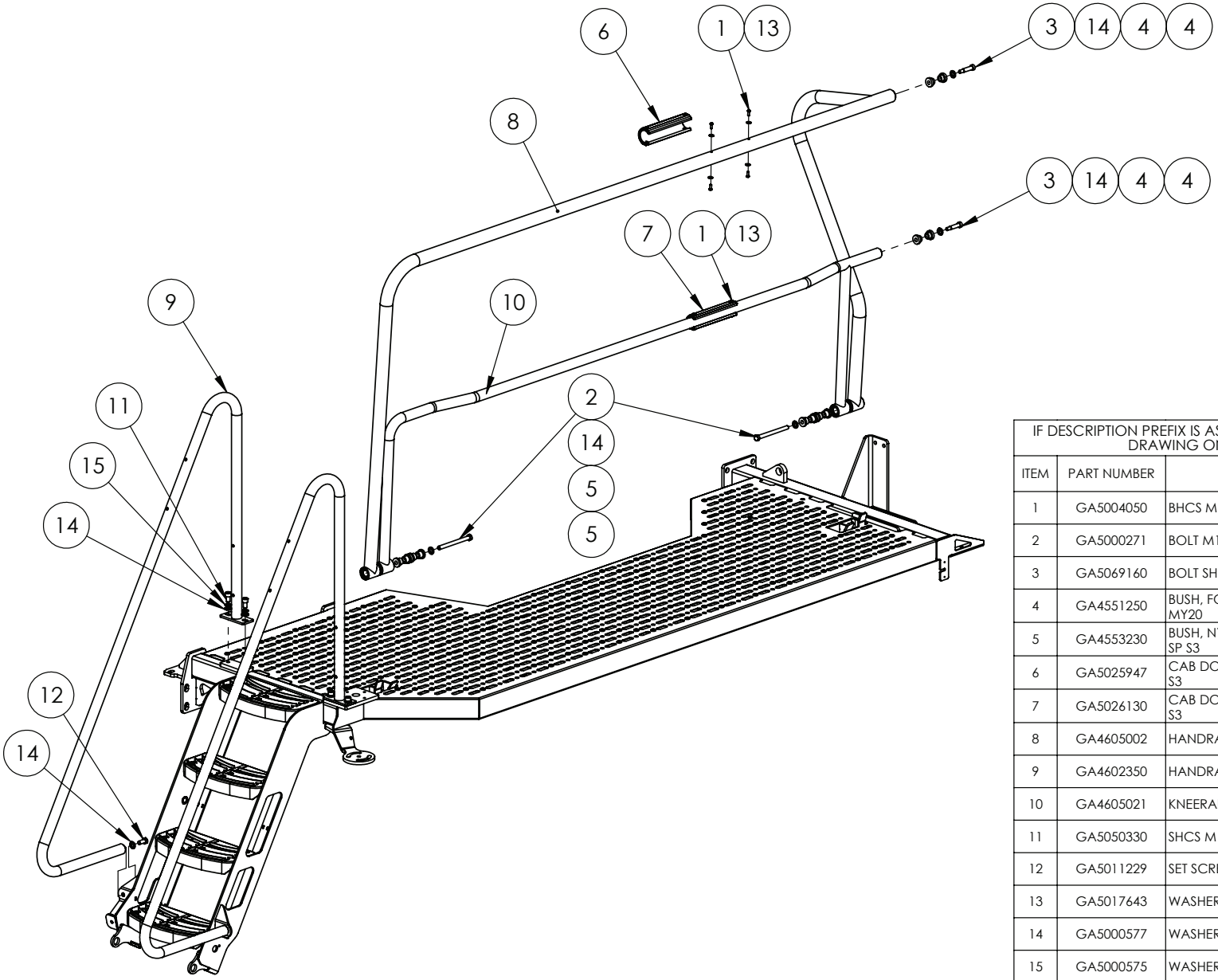

IF DESCRIPTION PREFIX IS ASSEMBLY DRAWING ONLY OR PRODUCTION DRAWING ONLY THE ITEM IS NOT FOR SALE			
ITEM	PART NUMBER	DESCRIPTION	QTY
1	GA5004050	BHCS M6 X 16 SS A2-70	8
2	GA5000271	BOLT M12 X 140 GR8.8 ZP	2
3	GA5069160	BOLT SHOULDER SHCS M12 X 40 GR12.9 ZP	2
4	GA4551250	BUSH, FOLDING HAND RAIL, WHITE NYLON, G6 MY20	4
5	GA4553230	BUSH, NYLON, MOVING HARDRAIL, PLATFORM, LF SP S3	8
6	GA5025947	CAB DOOR STOPPER, HANDRAIL, PLATFORM, LF SP S3	1
7	GA5026130	CAB DOOR STOPPER, KNEERAIL, PLATFORM, LF SP S3	1
8	GA4605002	HANDRAIL, FOLDING RAIL, PLATFORM, LF SP S3	1
9	GA4602350	HANDRAIL, LADDER ACCESS, G6 MY20	2
10	GA4605021	KNEERAIL, FOLDING RAIL, PLATFORM, LF SP S3	1
11	GA5050330	SHCS M12 X 20 GR12.9 ZP	4
12	GA5011229	SET SCREW M12 X 25 GR8.8 ZP	2
13	GA5017643	WASHER 1/4" X 5/8" FLAT SS	8
14	GA5000577	WASHER M12 FLAT SS HD	10
15	GA5000575	WASHER M12 SPRING SS	4
GA6101950 GOLDACRES		PRODUCTION DRAWING ONLY, PLATFORM, LH CABIN ACCESS, LF SP S3	REV 00

Work Lights & Indicator Mounting, Access Platform

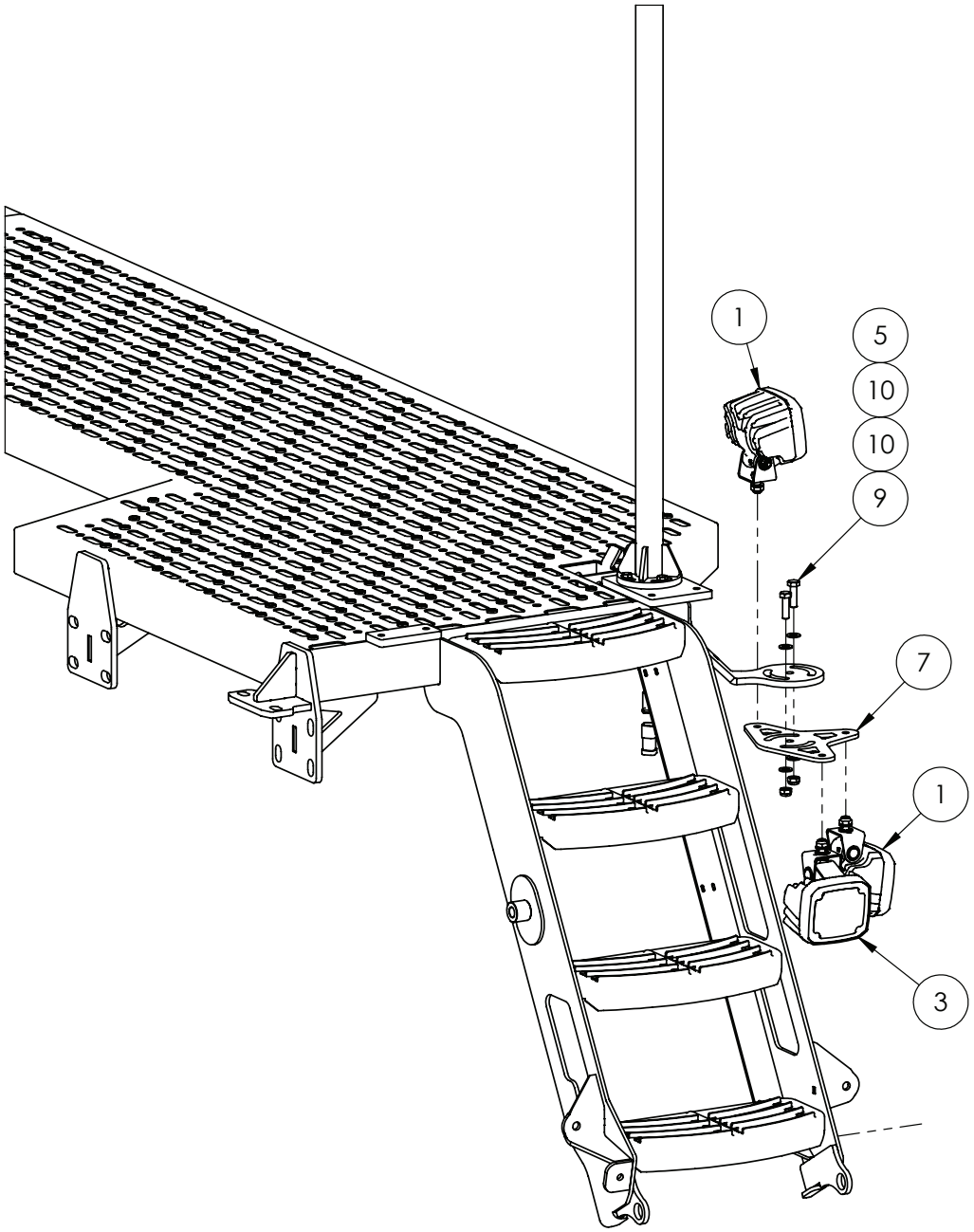

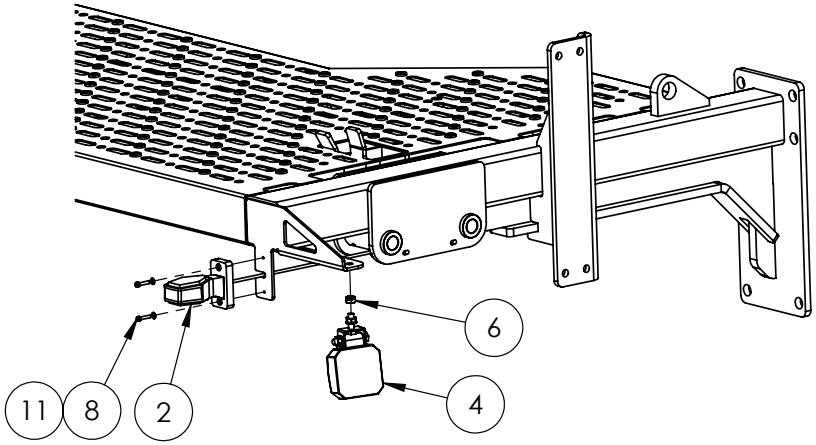

IF DESCRIPTION PREFIX IS ASSEMBLY DRAWING ONLY OR PRODUCTION DRAWING ONLY THE ITEM IS NOT FOR SALE			
ITEM	PART NUMBER	DESCRIPTION	QTY
1	GA3001337	LIGHT, LED, FLOOD, ULTRA BEAM S SERIES, HELLA, 1GA 995 706-001	2
2	GA3001120	PRODUCTION DRAWING ONLY, LIGHT, LED, LHS SIDE MARKER AND INDICATOR, WITH DEUTSCH CONNECTOR	1
3	GA3001338	LIGHT, LED, SPOT, ULTRA BEAM S SERIES, HELLA, 1GA 995 706-011	1
4	GA3001114	LIGHT, LED, COMPACT FLOOD 20W, IONNIC, 98-8210	1
5	GA5000141	NUT M10 NYLOC ZP	2
6	GA5004917	NUT M8 NYLOC ZP	1
7	GA4000644	PLATE, LIGHT MOUNT, 1 INTO 3, S3	1
8	GA5069375	SHCS M4 X 20 SS A2-70	2
9	GA5006111	SET SCREW M10 X 35 GR8.8 ZP	2
10	GA5000117	WASHER M10 FLAT SS HD	4
11	GA5020510	WASHER M4 FLAT SS	2
GA6101950 GOLDACRES		PRODUCTION DRAWING ONLY, PLATFORM, LH CABIN ACCESS, LF SP S3	REV 00

Side Mirror, Access Platform

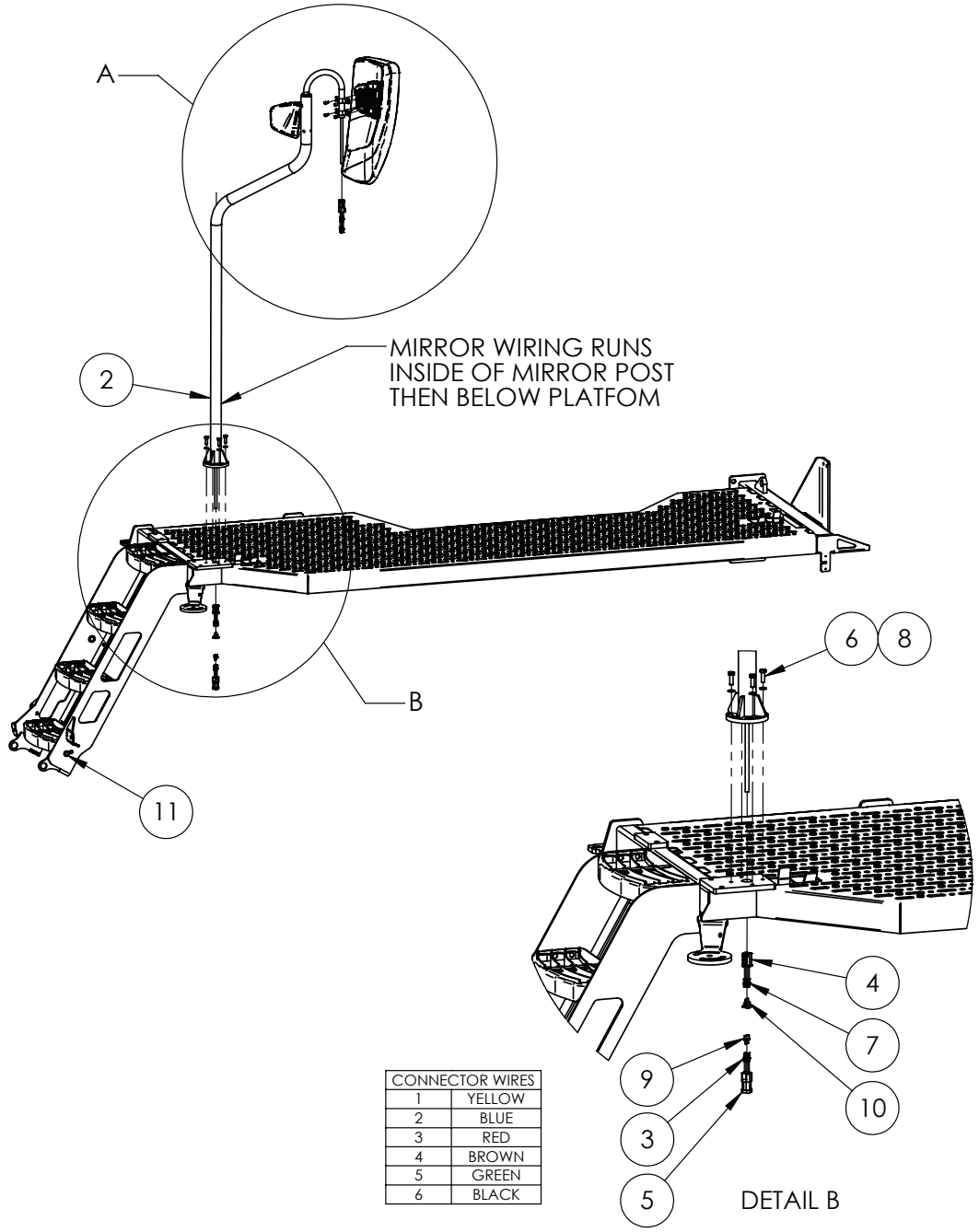

CONNECTOR WIRES	
1	YELLOW
2	BLUE
3	RED
4	BROWN
5	GREEN
6	BLACK

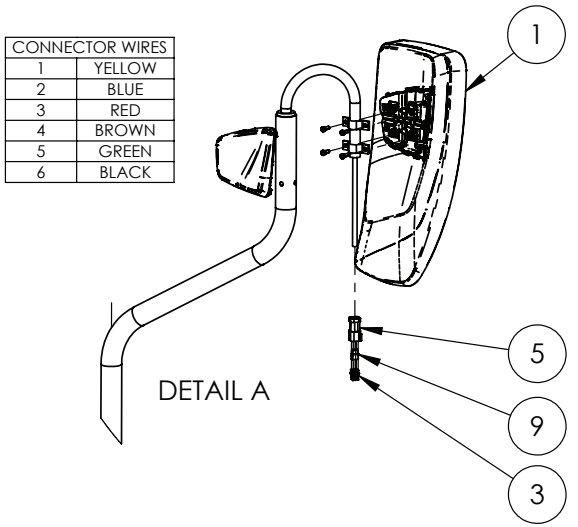

CONNECTOR WIRES	
1	YELLOW
2	BLUE
3	RED
4	BROWN
5	GREEN
6	BLACK

IF DESCRIPTION PREFIX IS ASSEMBLY DRAWING ONLY OR PRODUCTION DRAWING ONLY THE ITEM IS NOT FOR SALE			
ITEM	PART NUMBER	DESCRIPTION	QTY.
1	GA5026294	MIRROR, CLAAS X11 CABIN SIDE, LEFT HAND, 12V, X11, 0030008860	1
2	GA4605026	MOUNT, LH MIRROR, LF SP S3	1
3	GA5061240	PIN, MALE, SOLID, NICKEL, NUMBER 16, GREEN BAND, AWG 14, DEUTSCH, 0460-215-16141	12
4	GA5050960	PLUG, 6 WAY SOCKET, DT SERIES, DEUTSCH	1
5	GA5050970	RECEPTICAL, 6 WAY PIN, DT SERIES, DT04-6P, DEUTSCH	2
6	GA5004711	SET SCREW M8 X 25 GR8.8 ZP	4
7	GA5053235	SOCKET, FEMALE, NICKEL, NUMBER 16, 14 AWG, GREEN BAND, DEUTSCH	6
8	GA5003643	WASHER M8 FLAT SS HD	4
9	GA5050975	WEDGE LOCK, ORANGE, 6 WAY SOCKETS, DT SERIES, DEUTSCH	2
10	GA5050965	WEDGE LOCK, ORANGE, 6 WAY SOCKETS, DT SERIES, DEUTSCH	1
11	GA4909528	WELCOME LIGHT SWITCH MOUNT SUB ASSEMBLY	1
12	GA6101950-01	WIRE, ELECTRICAL CABLE, 7 CORE 7 STRAND CABLE (GA5004467) - 2.5m	1
GA6101950 GOLDACRES		PRODUCTION DRAWING ONLY, PLATFORM, LH CABIN ACCESS, LF SP S3	REV 00

Access Platform, Decals

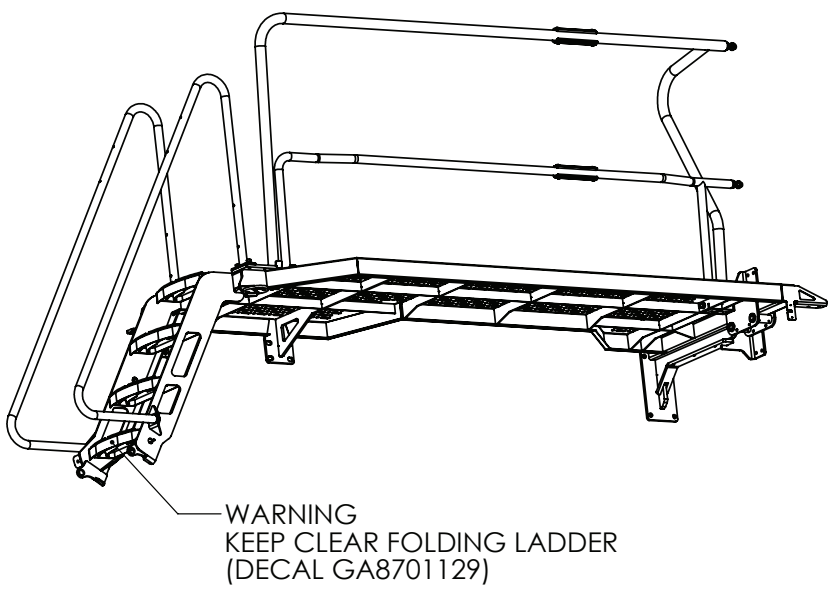

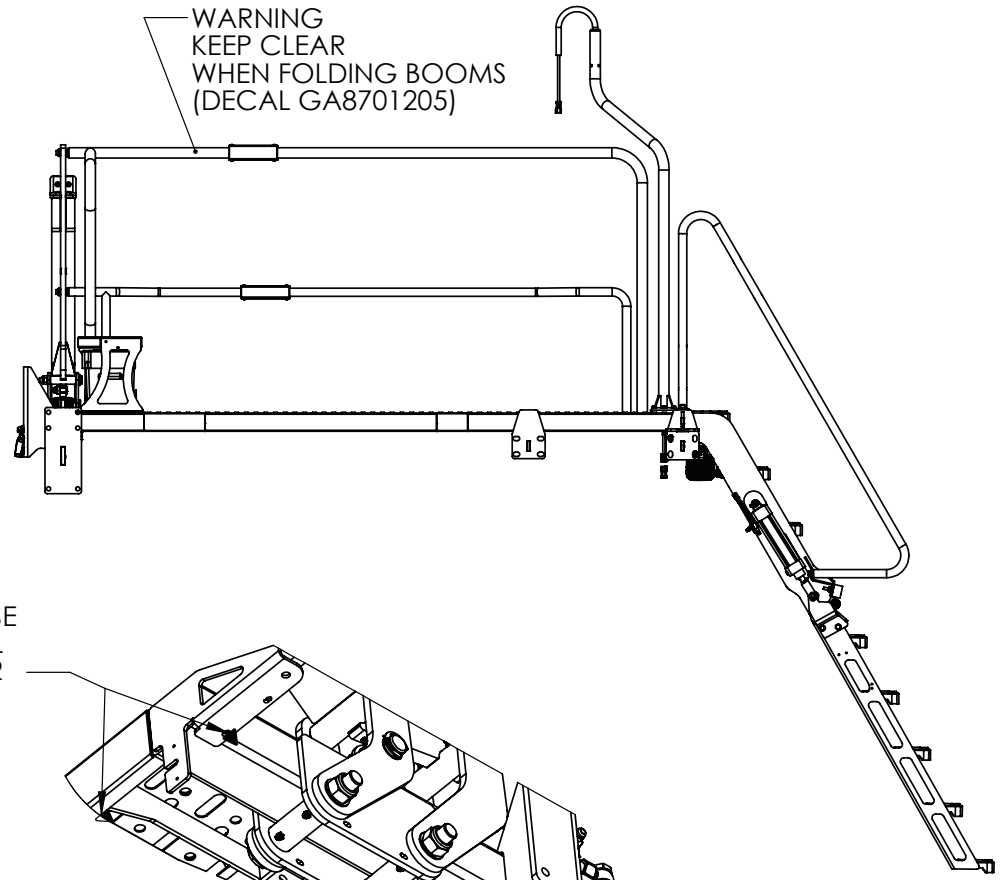

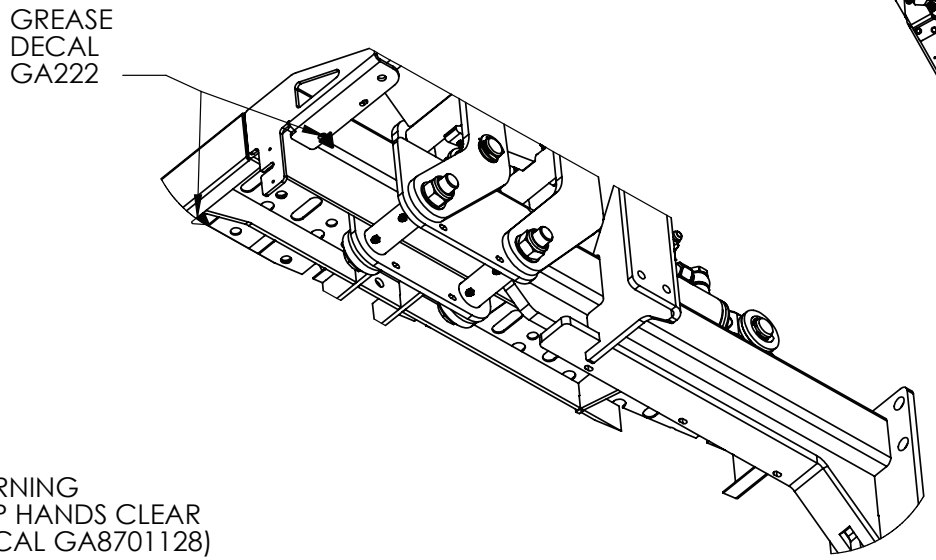

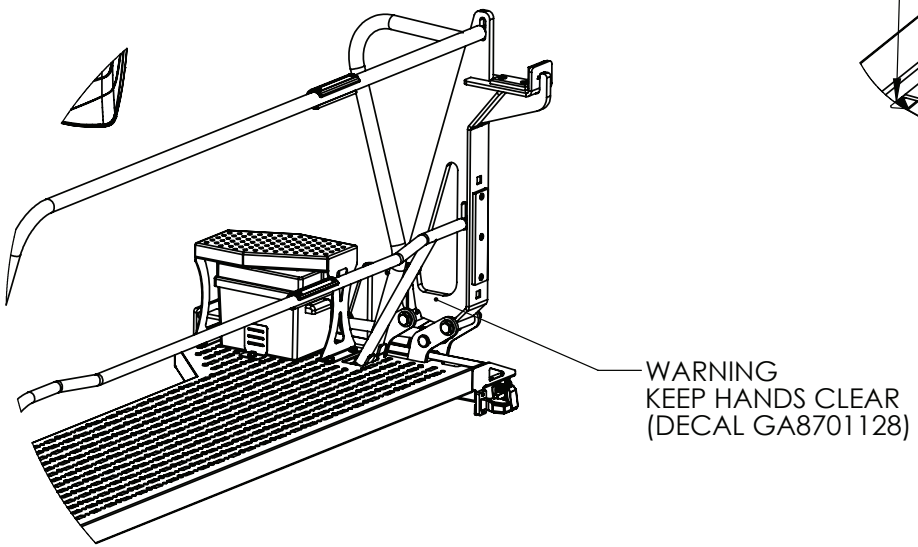

GA6101950 GOLDACRES	PRODUCTION DRAWING ONLY, PLATFORM, LH CABIN ACCESS, LF SP S3	REV 00

Boom Rest, Mounting 36mt & 48mt

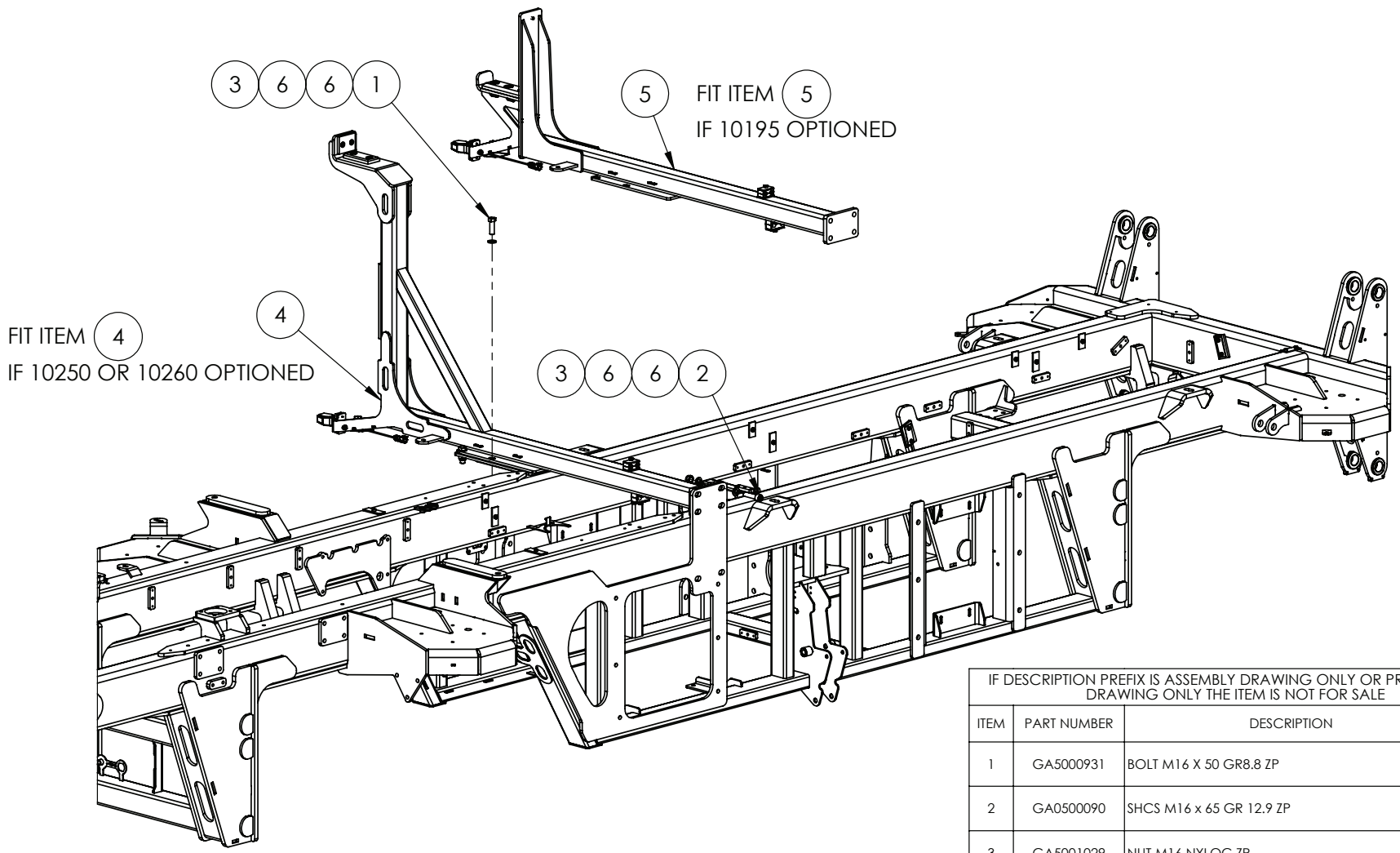

IF DESCRIPTION PREFIX IS ASSEMBLY DRAWING ONLY OR PRODUCTION DRAWING ONLY THE ITEM IS NOT FOR SALE			
ITEM	PART NUMBER	DESCRIPTION	QTY
1	GA5000931	BOLT M16 X 50 GR8.8 ZP	4
2	GA0500090	SHCS M16 x 65 GR 12.9 ZP	1
3	GA5001029	NUT M16 NYLOC ZP	5
4	GA4909457	PRODUCTION DRAWING ONLY, BOOM REST ASSEMBLY, TRITECH 36M, RH, SERIES 3, SELF PROPELLED	1
5	GA4909456	PRODUCTION DRAWING ONLY, BOOM REST ASSEMBLY, TRITECH 48M, RH, SERIES 3, SELF PROPELLED	1
6	GA5001043	WASHER M16 FLAT SS HD	10
GA7800267 GOLDACRES		ASSEMBLY DRAWING ONLY, PLATFORM & BOOM REST ASSEMBLY, LARGE FRAME S3	REV 00

BUILD OPTIONS:
10250 - TRI-TECH RIVX SERIES BOOM - 36M
10260 - TRI-TECH RIVX SERIES BOOM - 42M
10195 - TRI-TECH V SERIES BOOM - 48M

Boom Rest Assembly, RH, RIVX

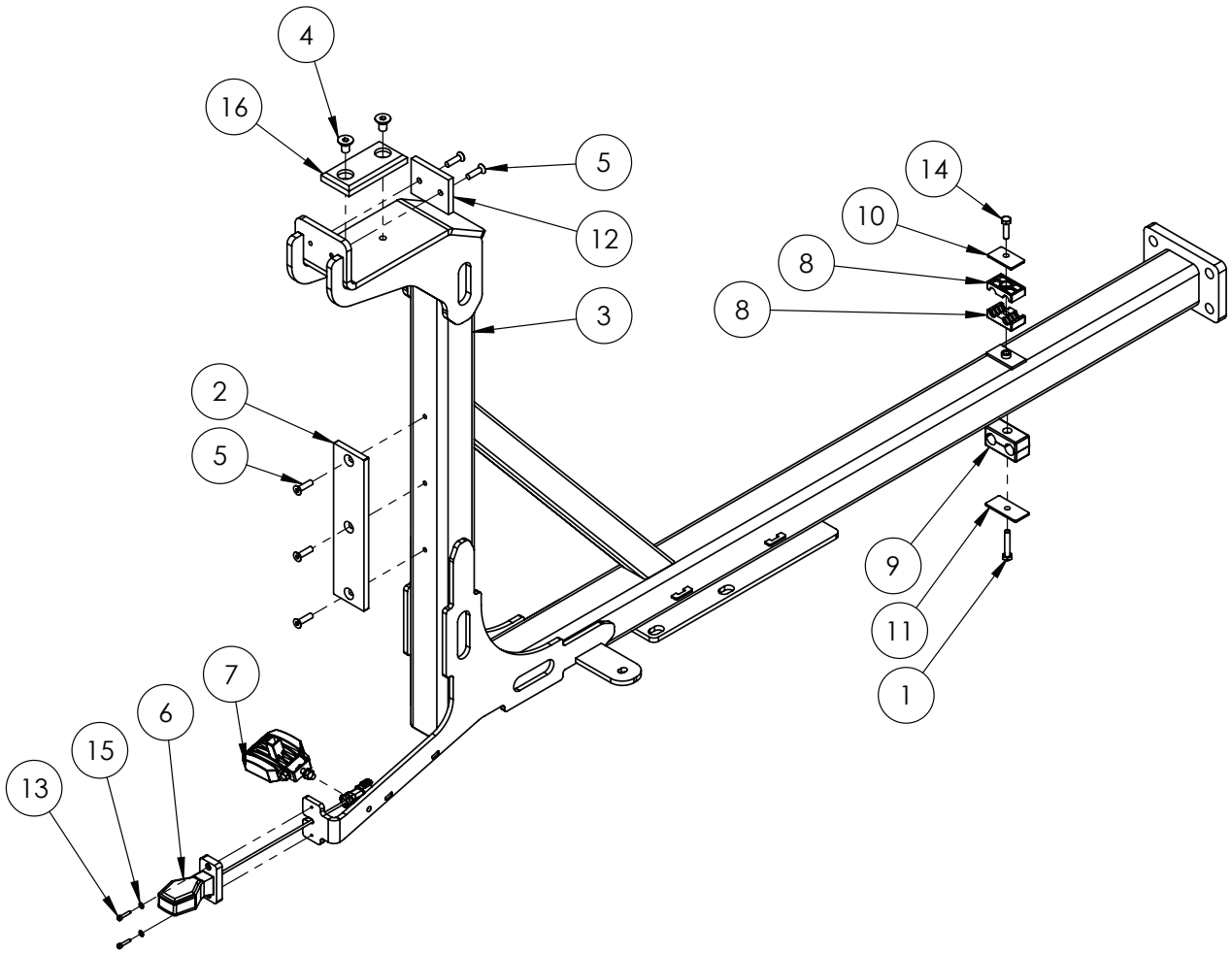

IF DESCRIPTION PREFIX IS ASSEMBLY DRAWING ONLY OR PRODUCTION DRAWING ONLY THE ITEM IS NOT FOR SALE			
ITEM	PART NUMBER	DESCRIPTION	QTY
1	GA0500033	BOLT M8 X 45 GR8.8 ZP	1
2	GA5073730	BOOM REST WEAR PAD, G6 MY20	1
3	GA4605032	BOOM REST, TRITECH 36M, RH, SERIES 3, SELF PROPELLED	1
4	GA5070860	CSCS M12 X 20 GR12.9 ZP	2
5	GA0500014	CSCS M8 X 20, ZP, GR12.9	5
6	GA3001121	LIGHT, LED, RHS SIDE MARKER AND INDICATOR, WITH DEUTSCH CONNECTOR	1
7	GA3001114	LIGHT, LED, COMPACT FLOOD 20W, IONNIC, 98-8210	1
8	GA5078031	MOUNTING CLAMP, DOUBLE TYPE, JAW, PAIR, GROUP 2, 14mm, RCD-14J	1
9	GA5073795	MOUNTING CLAMP, DOUBLE TYPE, JAW, PAIR, GROUP 3, 19mm, BLACK, RCD-19J	1
10	GA5078042	MOUNTING CLAMP, DOUBLE TYPE, PLATE, TOP, GROUP 2, RCD-2PT	1
11	GA5078046	MOUNTING CLAMP, DOUBLE TYPE, PLATE, TOP, GROUP 3, RCD-3PT	1
12	GA4550730	PLASTIC WEAR STRIP, BOOM REST SADDLE, G3V G4V	1
13	GA5069375	SHCS M4 X 20 SS A2-70	2
14	GA5011475	SET SCREW M8 X 30 GR8.8 ZP	1
15	GA5020510	WASHER M4 FLAT SS	2
16	GA4550055	WEAR SLIDE PLATE BOOM REST BOTTOM 2015	1
GA4909457 GOLDACRES		PRODUCTION DRAWING ONLY, BOOM REST ASSEMBLY, TRITECH 36M, RH, SERIES 3, SELF PROPELLED	REV A

Boom Rest Assembly, RH, 48mt

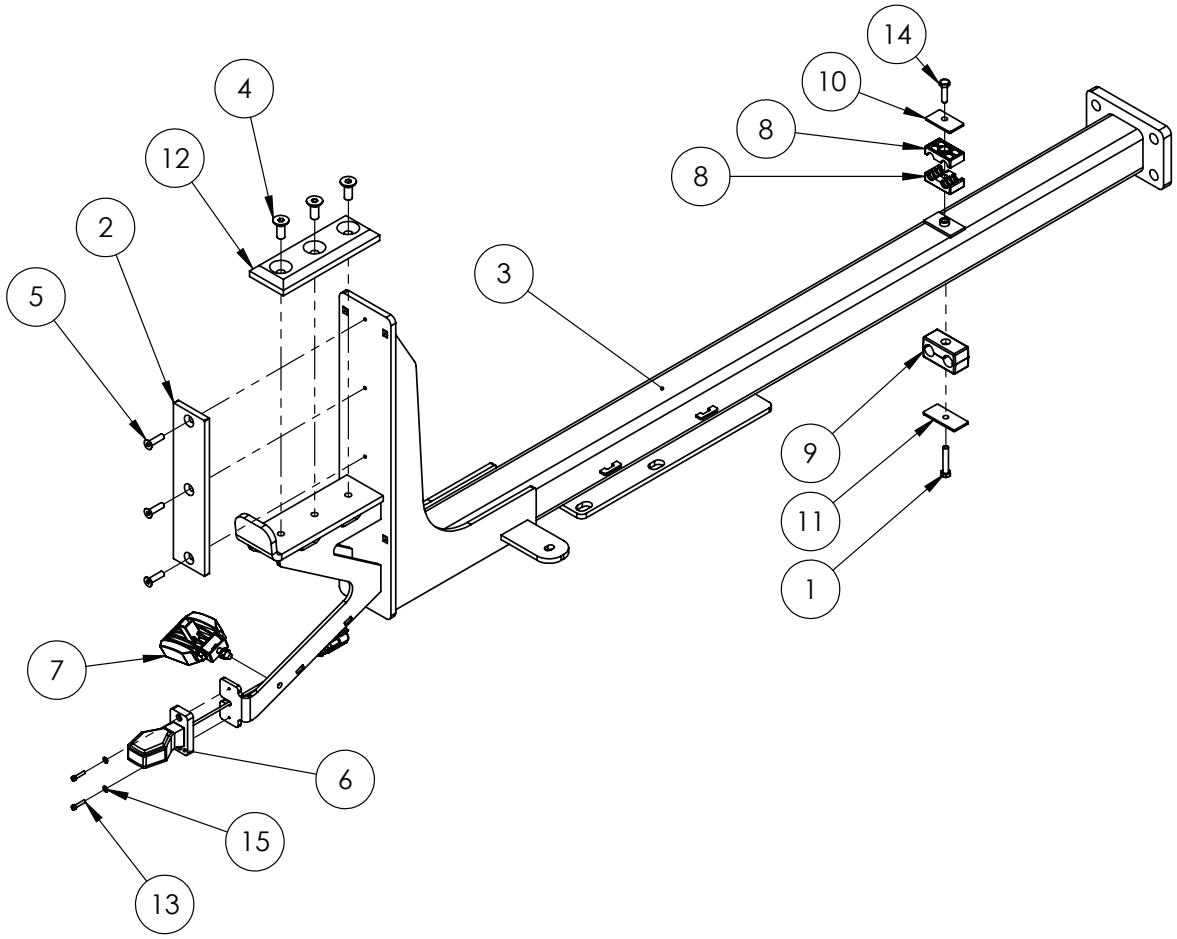

IF DESCRIPTION PREFIX IS ASSEMBLY DRAWING ONLY OR PRODUCTION DRAWING ONLY THE ITEM IS NOT FOR SALE			
ITEM	PART NUMBER	DESCRIPTION	QTY
1	GA0500033	BOLT M8 X 45 GR8.8 ZP	1
2	GA5073730	BOOM REST WEAR PAD, G6 MY20	1
3	GA4605031	BOOM REST, TRITECH 48M, RH, SERIES 3, SELF PROPELLED	1
4	GA5051290	CSCS M12 X 30 GR12.9 ZP	3
5	GA0500014	CSCS M8 X 20, ZP, GR12.9	3
6	GA3001121	LIGHT, LED, RHS SIDE MARKER AND INDICATOR, WITH DEUTSCH CONNECTOR	1
7	GA3001114	LIGHT, LED, COMPACT FLOOD 20W, IONNIC, 98-8210	1
8	GA5078031	MOUNTING CLAMP, DOUBLE TYPE, JAW, PAIR, GROUP 2, 14mm, RCD-14J	1
9	GA5073795	MOUNTING CLAMP, DOUBLE TYPE, JAW, PAIR, GROUP 3, 19mm, BLACK, RCD-19J	1
10	GA5078042	MOUNTING CLAMP, DOUBLE TYPE, PLATE, TOP, GROUP 2, RCD-2PT	1
11	GA5078046	MOUNTING CLAMP, DOUBLE TYPE, PLATE, TOP, GROUP 3, RCD-3PT	1
12	GA4550795	PLASTIC WEAR PAD, LOWER, BOOM REST, 48M BOOM	1
13	GA5069375	SHCS M4 X 20 SS A2-70	2
14	GA5011475	SET SCREW M8 X 30 GR8.8 ZP	1
15	GA5020510	WASHER M4 FLAT SS	2
GA4909456 GOLDACRES		PRODUCTION DRAWING ONLY, BOOM REST ASSEMBLY, TRITECH 48M, RH, SERIES 3, SELF PROPELLED	REV A

LH Pod, Mounting

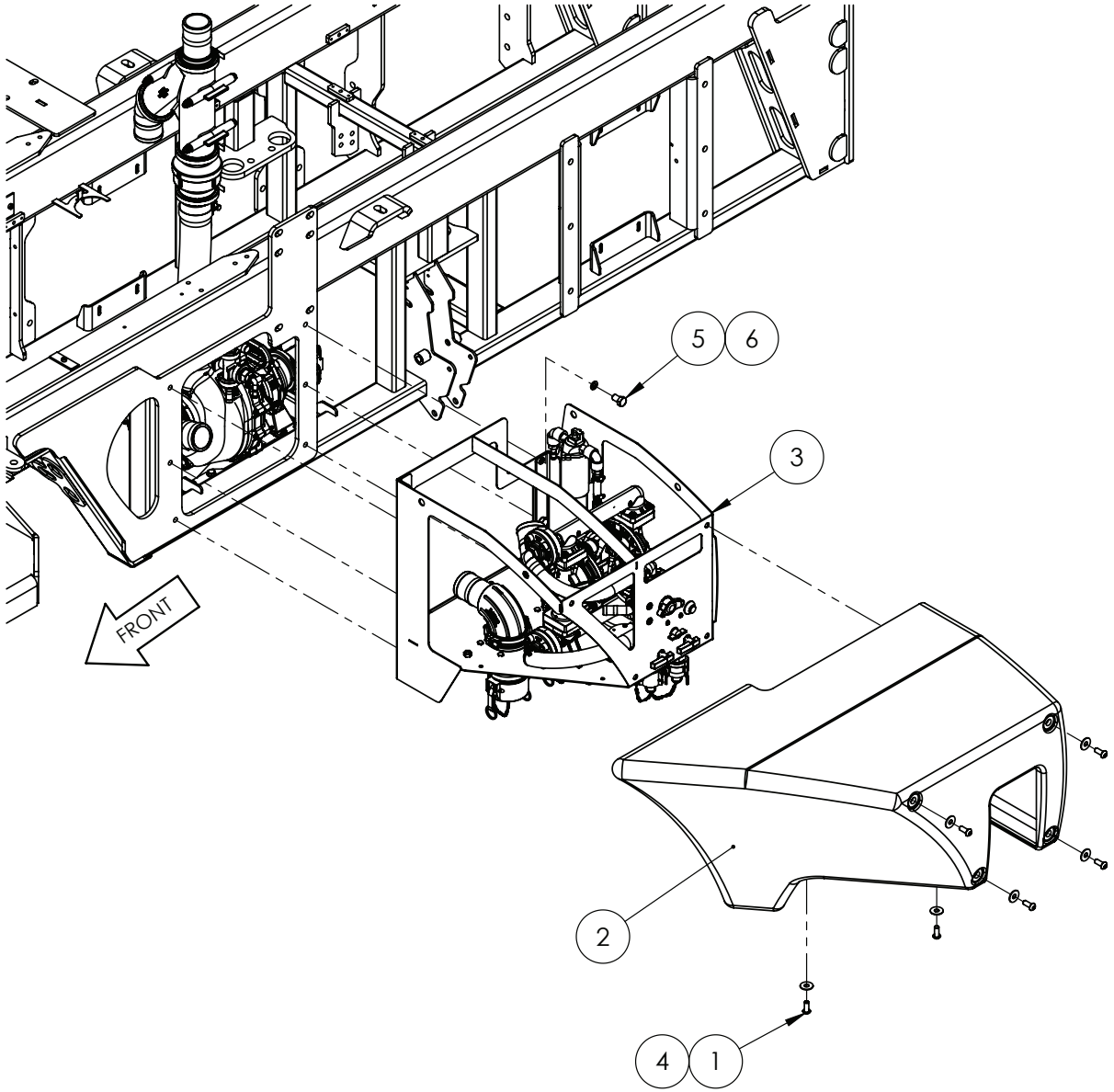

IF DESCRIPTION PREFIX IS ASSEMBLY DRAWING ONLY OR PRODUCTION DRAWING ONLY THE ITEM IS NOT FOR SALE			
ITEM	PART NUMBER	DESCRIPTION	QTY
1	GA5048530	BHCS M12 X 20 SS A2-70	6
2	GA5078499	COVER, PLUMBING POD, ROTOMOULDED PLASTIC, BLACK, G6, MY20	1
3	GA4954225	FILL POD ASSEMBLY, LARGE FRAME SP, SERIES 3	1
4	GA4409180	PLATE, SIDE COVERS, WASHER, G6 MY20	6
5	GA5000903	SET SCREW M16 X 25 GR8.8 ZP	6
6	GA5000577	WASHER M12 FLAT SS HD	6
GA7800310 GOLDACRES		ASSEMBLY DRAWING ONLY, FILL POD, SERIES 3	REV 00

Fill Pod Plumbing Assembly

GA7500201 - PLUMBING SCHEMATIC (REFER FOR HOSE NUMBER DESCRIPTION)

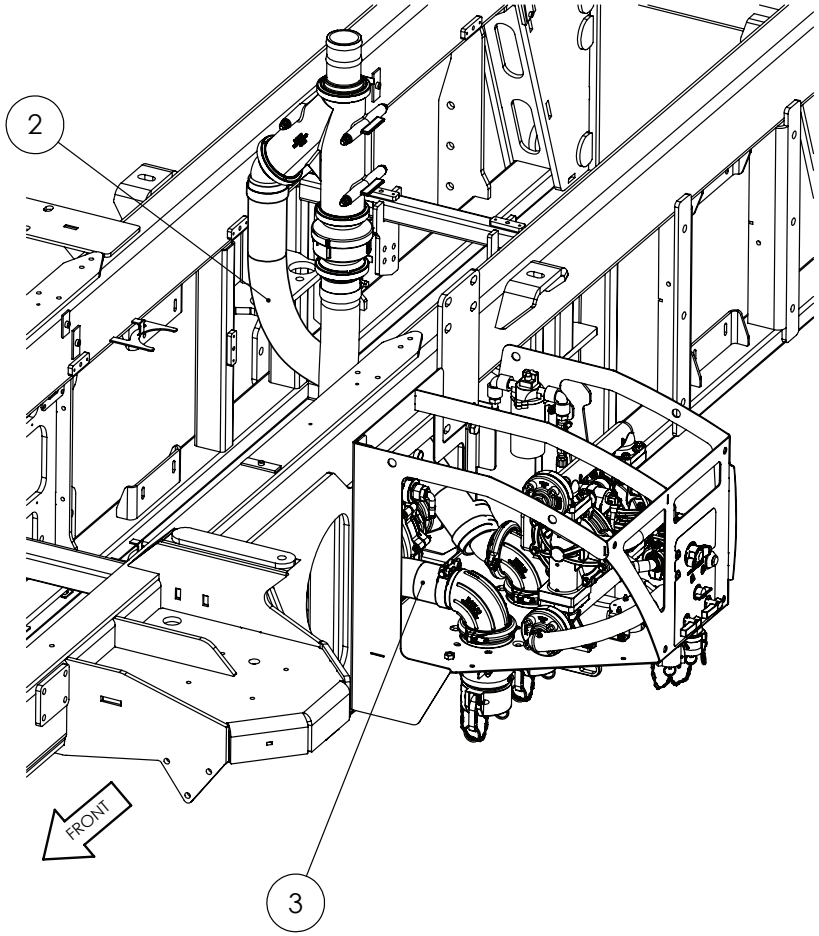

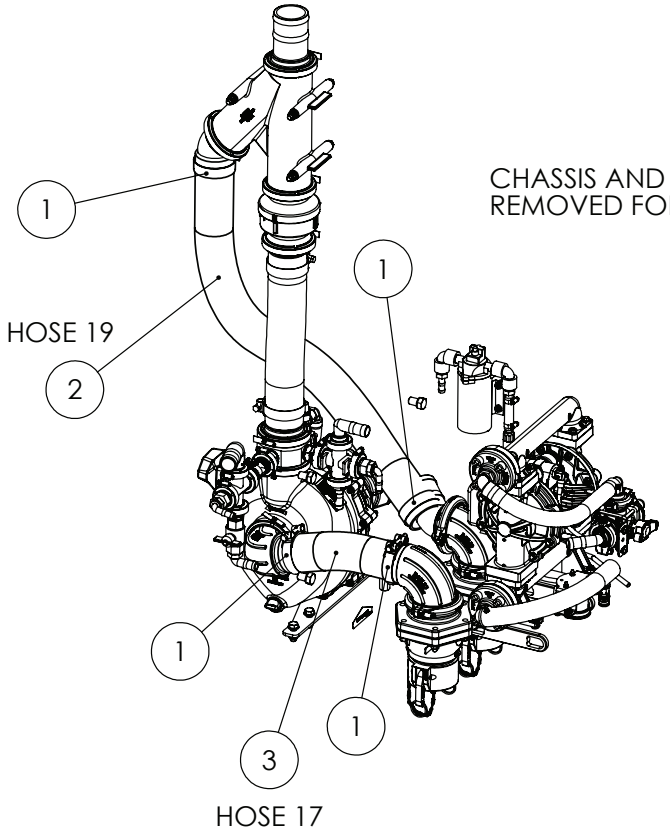

CHASSIS AND POD FRAME
REMOVED FOR CLARITY

IF DESCRIPTION PREFIX IS ASSEMBLY DRAWING ONLY OR PRODUCTION DRAWING ONLY THE ITEM IS NOT FOR SALE			
ITEM	PART NUMBER	DESCRIPTION	QTY
1	GA5054715	HOSE CLAMP, T BOLT, 86-91, SUIT 75mm AND 3", TRIDON	4
2	GA2000232	HOSE, SUCTION, 75mm, WIRE REINFORCED, HOS75S	0.82
3	GA2000232	HOSE, SUCTION, 75mm, WIRE REINFORCED, HOS75S	0.31
GA7800401 GOLDACRES		ASSEMBLY DRAWING ONLY, 3" HOSES FILL POD TO FILL PUMP, SERIES 3	REV 00

3” Fill Pump & Fill Manifold Mounting

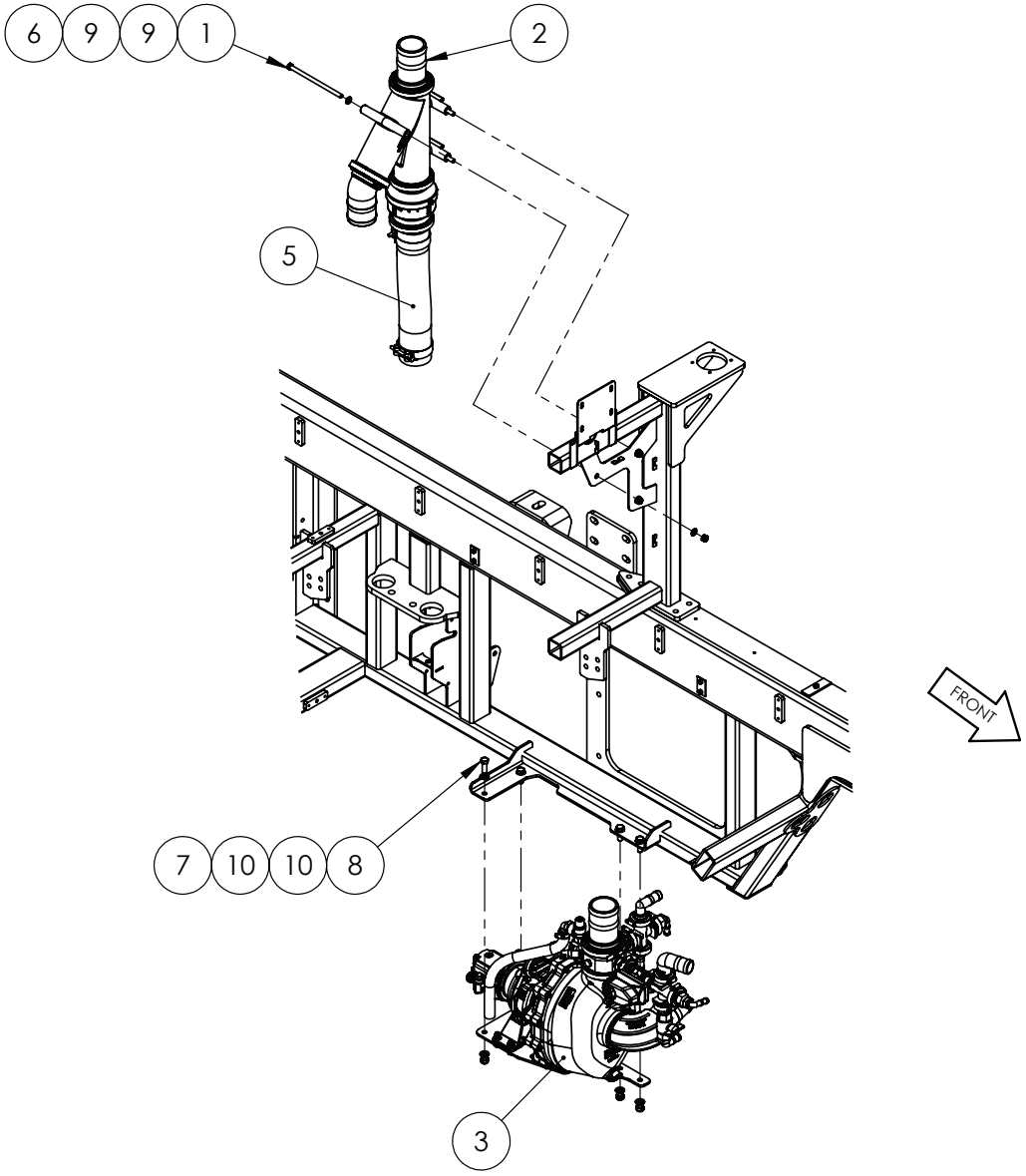

IF DESCRIPTION PREFIX IS ASSEMBLY DRAWING ONLY OR PRODUCTION DRAWING ONLY THE ITEM IS NOT FOR SALE			
ITEM	PART NUMBER	DESCRIPTION	QTY
1	GA0500091	BOLT M10 X 190 GR8.8 ZP	3
2	GA4954150	FILL MANIFOLD ASSEMBLY, 3", SERIES 3	1
3	GA4954145	FILL PUMP ASSEMBLY, 3" BANJO, SERIES 3	1
4	GA5054715	HOSE CLAMP, T BOLT, 86-91, SUIT 75mm AND 3", TRIDON	2
5	GA2000232	HOSE, SUCTION, 75mm, WIRE REINFORCED, HOS75S	0.425
6	GA5000141	NUT M10 NYLOC ZP	3
7	GA5012461	NUT M12 NYLOC ZP	4
8	GA5000311	SET SCREW M12 X 35 GR8.8 ZP	4
9	GA5000117	WASHER M10 FLAT SS HD	6
10	GA5000577	WASHER M12 FLAT SS HD	8
GA7800278 GOLDACRES		ASSEMBLY DRAWING ONLY, FILL PUMP AND MANIFOLD, S3	REV 00

3” Fill Manifold Assembly

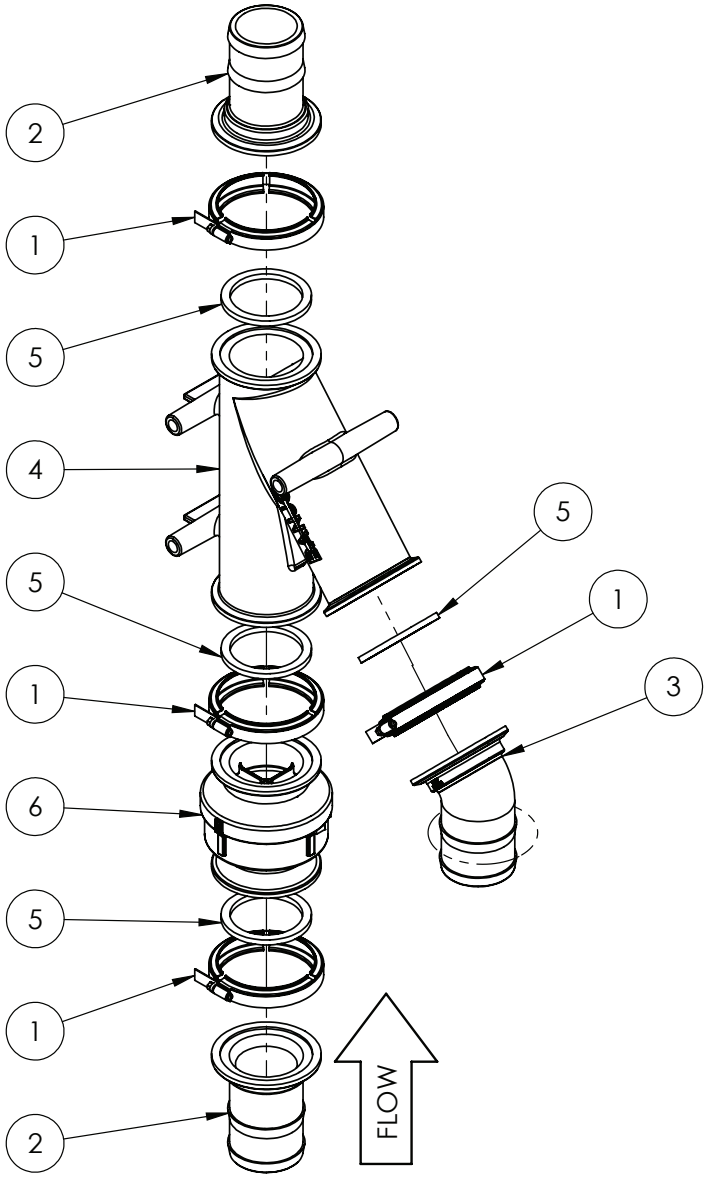

IF DESCRIPTION PREFIX IS ASSEMBLY DRAWING ONLY OR PRODUCTION DRAWING ONLY THE ITEM IS NOT FOR SALE			
ITEM	PART NUMBER	DESCRIPTION	QTY
1	FC300	CLAMP, 3" FLANGE MANIFOLD, BANJO	4
2	GA2000061	HOSE BARB, STRAIGHT, 3" FLANGE X 3" HOSE, BANJO	2
3	GA5077874	MANIFOLD HOSE BARB 3", 45 DEGREE, M300BRB45	1
4	GA2000147	PLUMBING ADAPTOR, 3" M300 STRAIGHT WITH 45 SIDE INLET Y, M300Y45	1
5	GA5076723	SEAL, EPDM, SUIT 3 FLANGE FITTING, BANJO	4
6	GA2000088	VALVE, CHECK, 3"MANIFOLD, FULL PORT, FLANGE, BANJO	1
GA4954150 GOLDACRES		FILL MANIFOLD ASSEMBLY, 3", SERIES 3	REV 00

3” Fill Pump Assembly

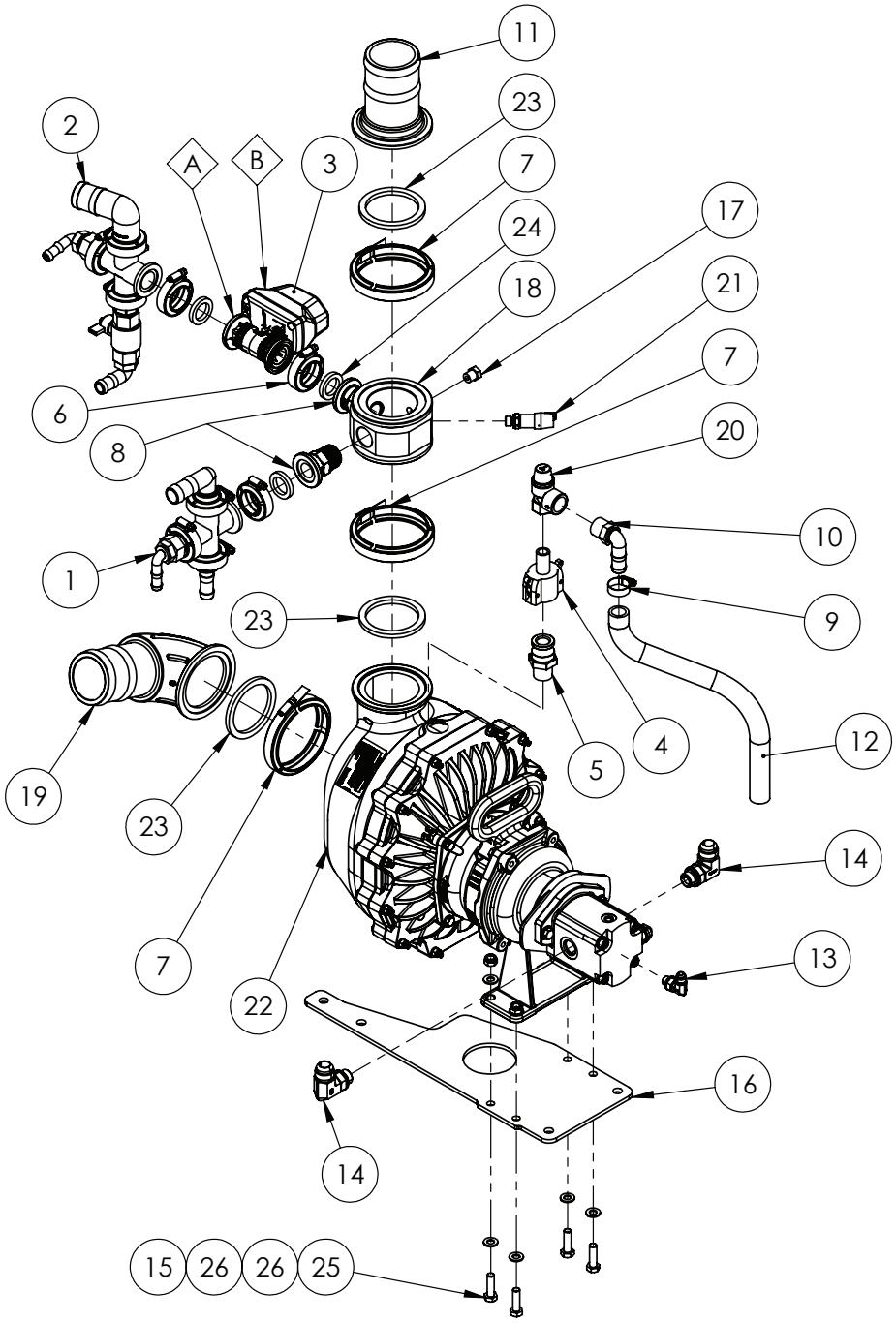

REPLACEMENT PARTS			
ITEM	PART NUMBER	DESCRIPTION	QTY
A	GA2000154	BALL VALVE, VALVE ONLY, SUIT GA2000141, KZ VALVE	-
B	GA5026374	REPAIR KIT, VALVE, KZ, TX2, SUIT, GA2000141	-

IF DESCRIPTION PREFIX IS ASSEMBLY DRAWING ONLY OR PRODUCTION DRAWING ONLY THE ITEM IS NOT FOR SALE			
ITEM	PART NUMBER	DESCRIPTION	QTY
1	GA4909628	ASSEMBLY DRAWING ONLY, CLEAN FILL CROSS	1
2	GA4909627	ASSEMBLY DRAWING ONLY, RINSE TANK-MICROMATIC RINSE CROSS	1
3	GA2000141	BALL VALVE, MOTORIZED, 2 WAY, 1" FLANGE CONNECTION, 0.5 SECOND, KZ VALVE, TX2	1
4	GA5077128	CAM LEVER, 3/4 FEMALE COUPLING X 1/2 MALE THREAD, BANJO, 75B1/2	1
5	GA5077134	CAM LEVER, 3/4 MALE COUPLING X 3/4 MALE THREAD, BANJO	1
6	GA5077664	CLAMP, WORM SCREW, 1", BANJO	1
7	FC300	CLAMP, 3" FLANGE MANIFOLD, BANJO	3
8	GA5077820	COUPLING, FLANGED, 1 FLANGE X 1 MALE THREAD, BANJO	2
9	GA5000999	HOSE CLAMP, 3/4" SS (16-27/12W)	1
10	GA5077717	HOSE BARB, ELBOW, 90 DEGREE, 3/4 MALE THREAD X 3/4 HOSE, BANJO	1
11	GA2000061	HOSE BARB, STRAIGHT, 3" FLANGE X 3" HOSE, BANJO	1
12	GA2000216	HOSE, PRESSURE, 20mm, BLACK 250PSI, HOS20P, 100M ROLL	0.5
13	GA3500734	HYDRAULIC ADAPTER, ELBOW, 90 DEGREE, 9/16" JIC X 1/4" BSPP MALE O-RING , S76-0409	1
14	GA3500723	HYDRAULIC ADAPTOR, ELBOW, 90 DEGREE, 1 1/16" JIC MALE X 1/2" BSPP MALE O-RING, S76-0817	2
15	GA5000141	NUT M10 NYLOC ZP	4
16	GA4416375	PLATE, FILL PUMP MOUNT, BOLT ON BRACKET, LARGE FRAME SP, S3	1
17	GA5077942	PLUG, 1/4 MALE THREAD, BANJO	1
18	GA4583705	PLUMBING ADAPTOR, M300 FLANGE, 1" NPT PORT, 1/4" NPSM PORT	1
19	GA2000148	PLUMBING FITTING, 3" FLANGE TO 3" BARB, SWEPT ELBOW, BANJO, M300BRBSWP90	1
20	GA2000131	PRESSSURE RELIEF VALVE, SPIKE, 4 BAR, 1/2" IN, 3/4" OUT, BRASS, CALEFFI	1
21	GA3000316	PRESSURE SENSOR TRANSDUCER, 0-25 BAR, 0.5-4.5V, IFM	1
22	GA2000575	PUMP, FILL, 3" FLANGE, HYDRAULICALLY DRIVEN, BANJO, M350	1
23	GA5076723	SEAL, EPDM, SUIT 3 FLANGE FITTING, BANJO	3
24	GA5077818	SEAL, SUIT 1 MANIFOLD FITTING, RUBBER EPDM, BANJO, M100G	1
25	GA5006111	SET SCREW M10 X 35 GR8.8 ZP	4
26	GA5000117	WASHER M10 FLAT SS HD	8
GA4954145 GOLDACRES		FILL PUMP ASSEMBLY, 3" BANJO, SERIES 3	REV 00

Clean Fill, Cross Manifold Assembly

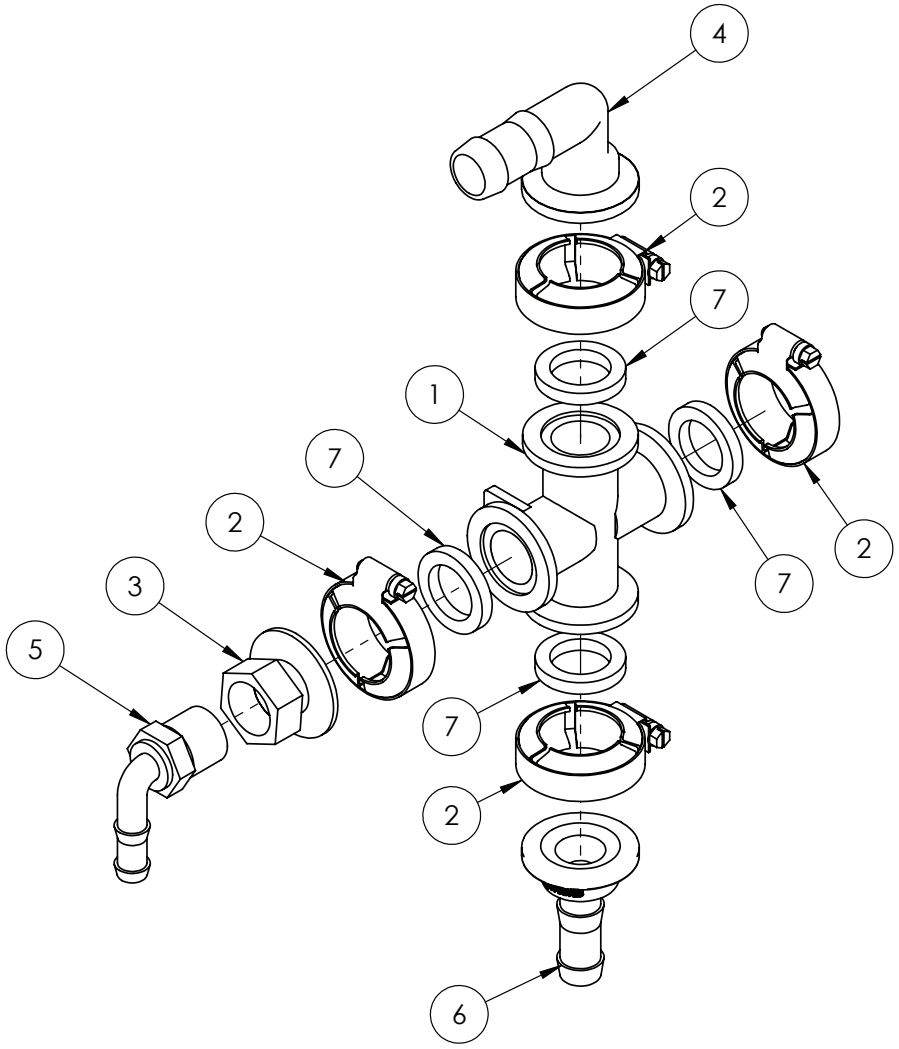

IF DESCRIPTION PREFIX IS ASSEMBLY DRAWING ONLY OR PRODUCTION DRAWING ONLY THE ITEM IS NOT FOR SALE			
ITEM	PART NUMBER	DESCRIPTION	QTY
1	GA5077816	1" FLANGED CROSS	1
2	GA5077664	CLAMP, WORM SCREW, 1", BANJO	4
3	GA5077804	COUPLING, 1" FLANGE X 3/4" FEMALE THREAD, BANJO	1
4	GA5077812	HOSE BARB, ELBOW, 90 DEGREE, 1 FLANGE X 1 HOSE, BANJO	1
5	GA5077710	HOSE BARB, ELBOW, 90 DEGREE, 3/4 MALE THREAD X 1/2 HOSE, BANJO	1
6	GA5077802	HOSE BARB, STRAIGHT, 1" FLANGE X 3/4" HOSE, BANJO, M100075BRB	1
7	GA5077818	SEAL, SUIT 1 MANIFOLD FITTING, RUBBER EPDM, BANJO, M100G	4
GA4909628 GOLDACRES		ASSEMBLY DRAWING ONLY, CLEAN FILL CROSS	REV 00

Rinse Tank, Cross Manifold Assembly

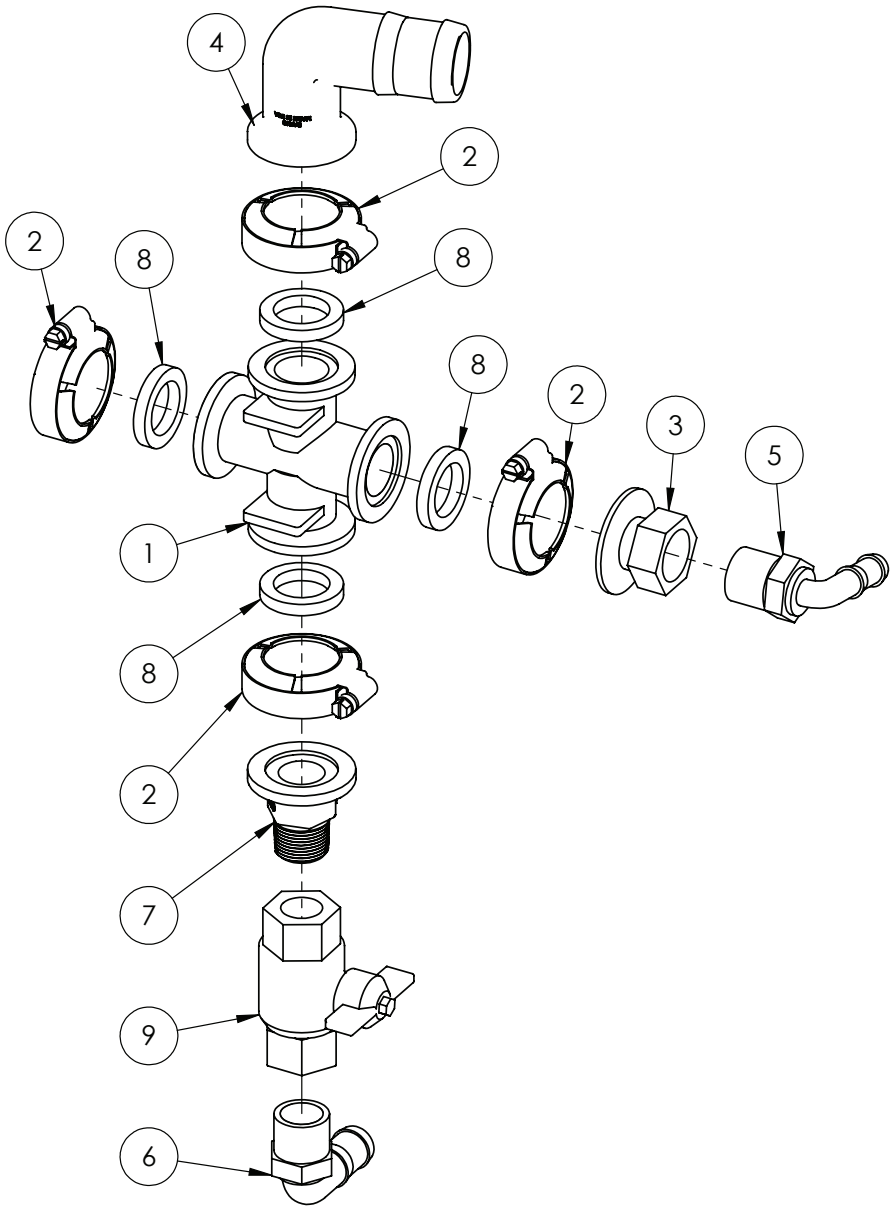

IF DESCRIPTION PREFIX IS ASSEMBLY DRAWING ONLY OR PRODUCTION DRAWING ONLY THE ITEM IS NOT FOR SALE			
ITEM	PART NUMBER	DESCRIPTION	QTY
1	GA5077816	1" FLANGED CROSS	1
2	GA5077664	CLAMP, WORM SCREW, 1", BANJO	4
3	GA5077804	COUPLING, 1" FLANGE X 3/4" FEMALE THREAD, BANJO	1
4	GA2000138	HOSE BARB, ELBOW, 90 DEGREE, 1" FLANGE, X 1 1/2" HOSE, BANGO M100150BRB90	1
5	GA5077710	HOSE BARB, ELBOW, 90 DEGREE, 3/4 MALE THREAD X 1/2 HOSE, BANJO	1
6	GA5077717	HOSE BARB, ELBOW, 90 DEGREE, 3/4 MALE THREAD X 3/4 HOSE, BANJO	1
7	GA5077805	PLUMBING COUPLING, 1" FLANGE X 3/4" MALE THREAD, BANJO	1
8	GA5077818	SEAL, SUIT 1 MANIFOLD FITTING, RUBBER EPDM, BANJO, M100G	4
9	GA5018311	VALVE, BALL, 20mm, 3/4" FEMALE, BUTTERFLY HANDLE, BRASS	1
GA4909627 GOLDACRES		ASSEMBLY DRAWING ONLY, RINSE TANK-MICROMATIC RINSE CROSS	REV 00

Front Fill, Mount and Assembly

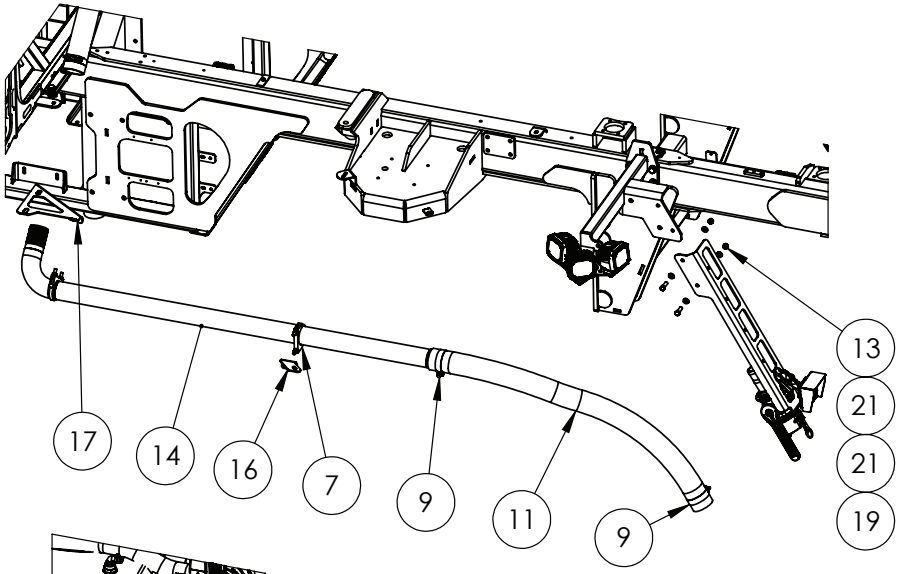

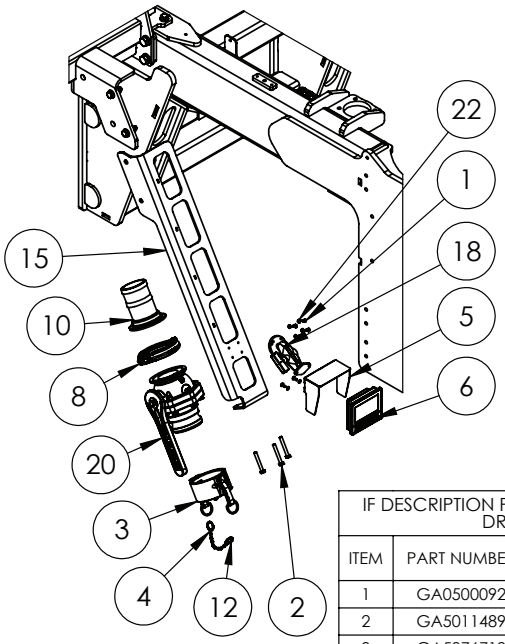

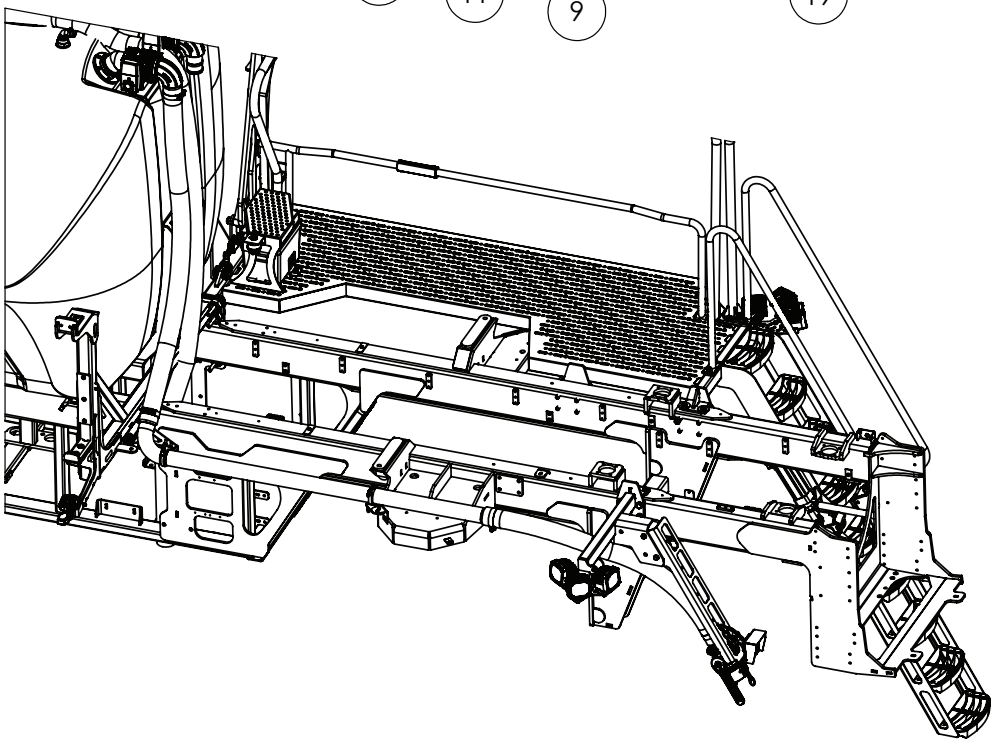

IF DESCRIPTION PREFIX IS ASSEMBLY DRAWING ONLY OR PRODUCTION DRAWING ONLY THE ITEM IS NOT FOR SALE			
ITEM	PART NUMBER	DESCRIPTION	QTY
1	GA0500092	BHCS M5 X 12 SS A2-70	6
2	GA5011489	BOLT M8 X 60 GR8.8 ZP	3
3	GA5076719	CAM LEVER, 3" FEMALE CAP, BANJO	1
4	GA5001491	CHAIN 2 X 20 mm SS 316, 146102, 150mm LONG	0.15
5	GA4000331	COVER PLATE SUIT IFM CR1140 DISPLAY	1
6	GA3001173	DISPLAY SCREEN, 4.3", NON TOUCH, G6 S3, MY24, IFM CR1140	1
7	GA5002297	EXHAUST CLAMP -79mm (3.125 IN)	2
8	GA2000116	FLANGE CLAMP, AND GASKET, 3", SERIES 300, HYPRO	1
9	GA5054715	HOSE CLAMP, T BOLT, 86-91, SUIT 75mm AND 3", TRIDON	3
10	GA2000061	HOSE BARB, STRAIGHT, 3" FLANGE X 3" HOSE, BANJO	1
11	GA2000632	HOSE,FRONT FILL, FRONT	1.38
12	GA5002077	KEY RING, 25mm, SS	2
13	GA5012461	NUT M12 NYLOC ZP	2
14	GA4605095	PIPE, FRONT FILL, LF SP	1
15	GA4000227	PLATE, FRONT FILL MOUNT, LF SP S3	1
16	GA4000527	PLATE,FRONT FILL PIPE, FRONT CLAMP MOUNT	1
17	GA4000525	PLATE,FRONT FILL PIPE, REAR CLAMP MOUNT	1
18	GA5068930	RAM MOUNT, UNIVERSAL, ADJUSTABLE, B SIZE 1" BALL, 5" LENGTH, RAM-B-138U	1
19	GA5000319	SET SCREW M12 X 40 GR8.8 ZP	2
20	GA2000618	VALVE, BALL, 3" MANIFOLD FLANGE TO 3" CAM LOCK, STUBBY, BANJO, MVSF300	1
21	GA5000577	WASHER M12 FLAT SS HD	4
22	GA5003983	WASHER M5 FLAT SS	6
GA6101965 GOLDACRES		FRONT FILL, MANUAL, LF SP S3, MY25	REV 00.A

Primary Fuel Filter & Alternator Guard Mounting

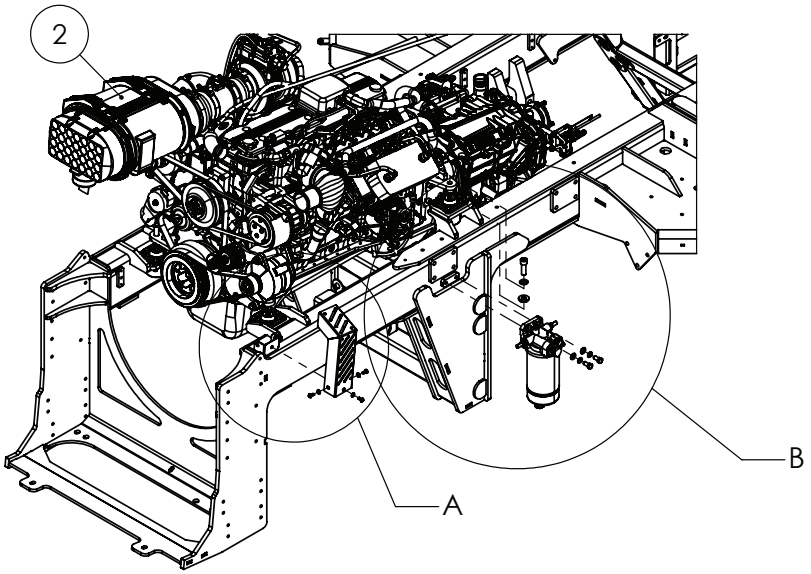

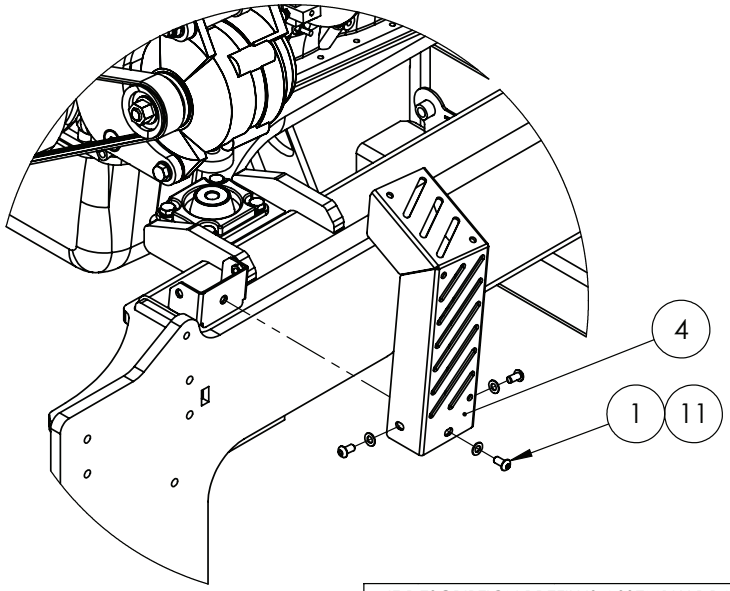

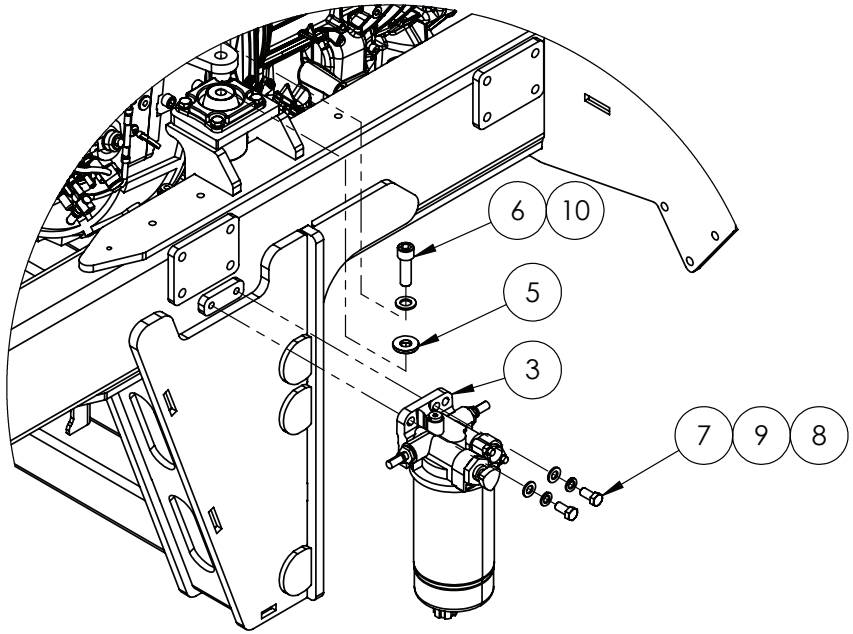

IF DESCRIPTION PREFIX IS ASSEMBLY DRAWING ONLY OR PRODUCTION DRAWING ONLY THE ITEM IS NOT FOR SALE			
ITEM	PART NUMBER	DESCRIPTION	QTY
1	GA5004696	BHCS M8 X 16 SS A2-70	3
2	GA6101970	ENGINE & TRANSMISSION ASSEMBLY, LF SP S3, MY25	1
3	GA5026389	FUEL FILTER ASSEMBLY, PRIMARY, INCLUDES FILTER HEAD, FILTER ELEMENT AND PUMP, FS20121, B6.7 ENGINE	1
4	GA4000532	PLATE, ALTERNATOR PULLEY GUARD, LARGE FRAME S3	1
5	GA4000758	PLATE, WASHER SPACER, M16 X 38 X 5mm	4
6	GA5000935	SHCS M16 X 50 GR 12.9 ZP	4
7	GA5011229	SET SCREW M12 X 25 GR8.8 ZP	2
8	GA5000577	WASHER M12 FLAT SS HD	2
9	GA5000575	WASHER M12 SPRING SS	2
10	GA5001043	WASHER M16 FLAT SS HD	4
11	GA5003651	WASHER M8 FLAT SS	3
GA7800275 GOLDACRES		ASSEMBLY DRAWING ONLY, ENGINE TO CHASSIS, LARGE FRAME SP, MY25	REV 00

Fuel Filter Assembly, Primary

REPLACEMENT PARTS			
ITEM	PART NUMBER	DESCRIPTION	QTY
A	GA2700211	FILTER, FUEL, PRIMARY, CUMMINS B6.7L, FS20121	1

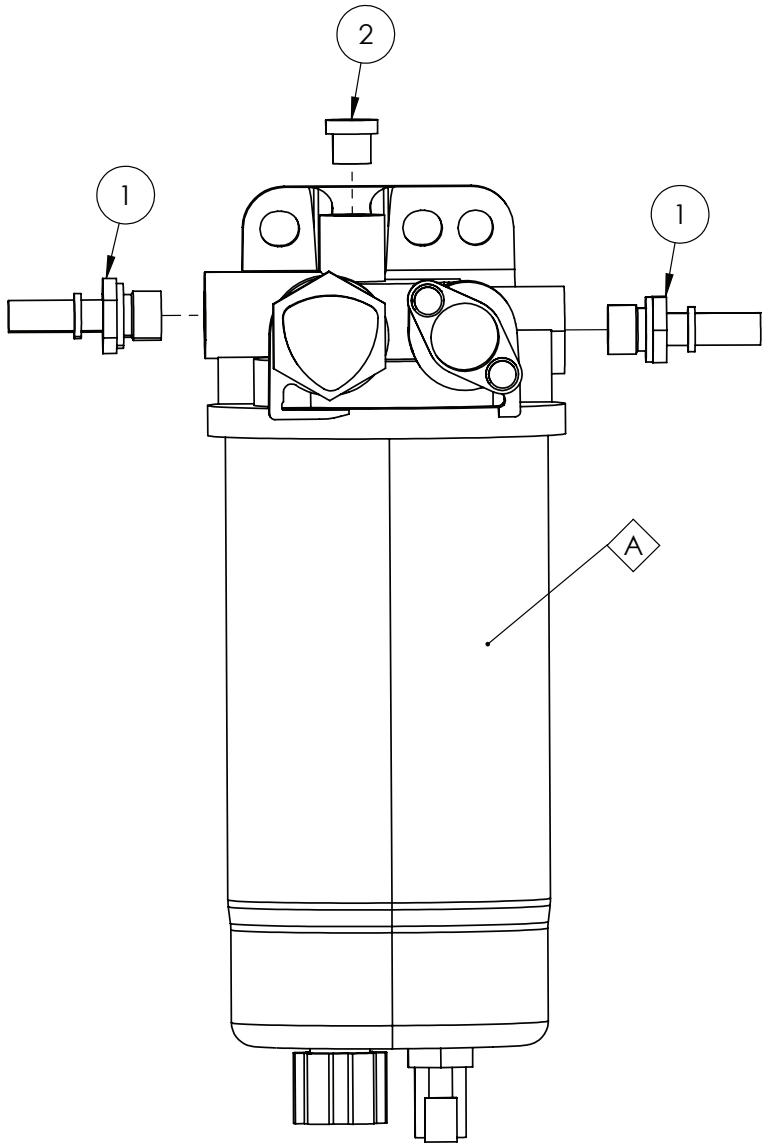

IF DESCRIPTION PREFIX IS ASSEMBLY DRAWING ONLY OR PRODUCTION DRAWING ONLY THE ITEM IS NOT FOR SALE			
ITEM	PART NUMBER	DESCRIPTION	QTY
1	GA5026582	BARB, QUICK CONNECT, FUEL, M18 X 1/2", PRIMARY FUEL FILTER	2
2	GA5026583	PLUG, M14, SUIT, PRIMARY FUEL FILTER, GA2700140	1
GA5026389 GOLDACRES		FUEL FILTER ASSEMBLY, PRIMARY, INCLUDES FILTER HEAD, FILTER ELEMENT AND PUMP, FS20121, B6.7 ENGINE	REV 00

Combination Cooler, Mounting

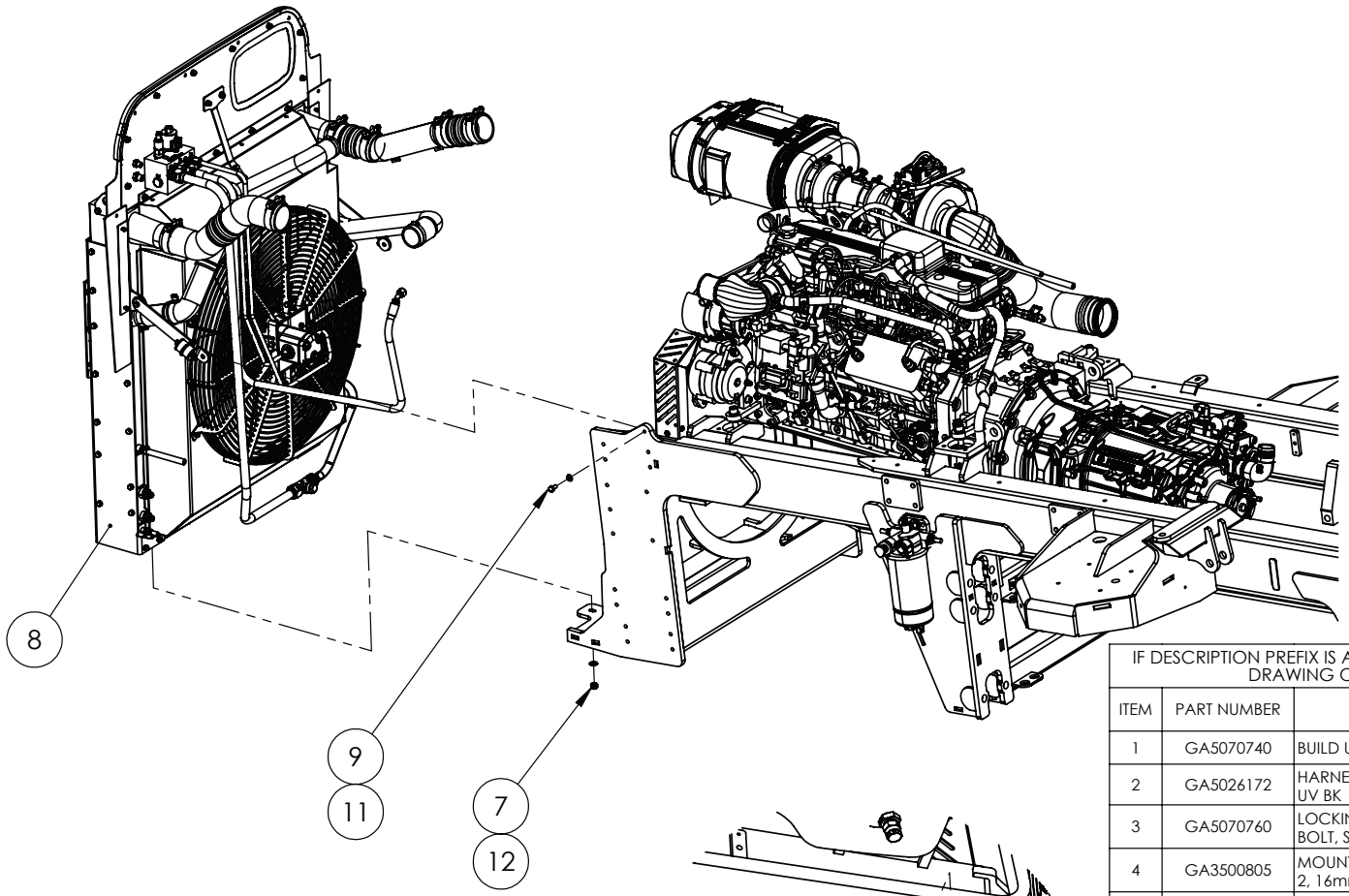

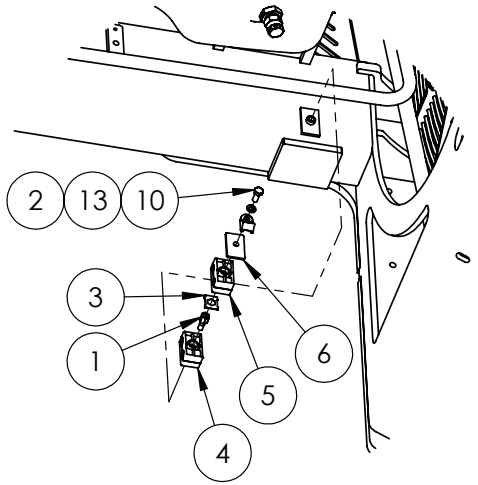

IF DESCRIPTION PREFIX IS ASSEMBLY DRAWING ONLY OR PRODUCTION DRAWING ONLY THE ITEM IS NOT FOR SALE			
ITEM	PART NUMBER	DESCRIPTION	QTY
1	GA5070740	BUILD UP BOLT, STACKING, M8 X 20 HYDAC	1
2	GA5026172	HARNESS CLIP, 36mm X 19mm M8 HOLE HI-IMPACT UV BK	1
3	GA5070760	LOCKING PLATE SUIT HYDAC CLAMPS, BUILD UP BOLT, STACKING	1
4	GA3500805	MOUNTING CLAMP, DOUBLE TYPE, JAW, PAIR, SIZE 2, 16mm	1
5	GA3501849	MOUNTING CLAMP, DOUBLE TYPE, JAW, PAIR, GROUP 2, 12.7mm, RCD-127J	1
6	GA5078042	MOUNTING CLAMP, DOUBLE TYPE, PLATE, TOP, GROUP 2, RCD-2PT	1
7	GA5012461	NUT M12 NYLOC ZP	2
8	GA4909495	PRODUCTION DRAWING ONLY, COOLER ASSEMBLY, S3	1
9	GA5006113	SET SCREW M10 X 20 GR8.8 ZP	2
10	GA5052595	SET SCREW M8 X 20 SS A2-70	1
11	GA5000117	WASHER M10 FLAT SS HD	2
12	GA5000577	WASHER M12 FLAT SS HD	2
13	GA5004919	WASHER M8 SPRING SS	1
GA7800264 GOLDACRES		ASSEMBLY DRAWING ONLY, RADIATOR COMBINATIONAL COOLER, LARGE FRAME SP, MY25	REV 00

Pipe Mounting, Hydraulic Oil Reservoir

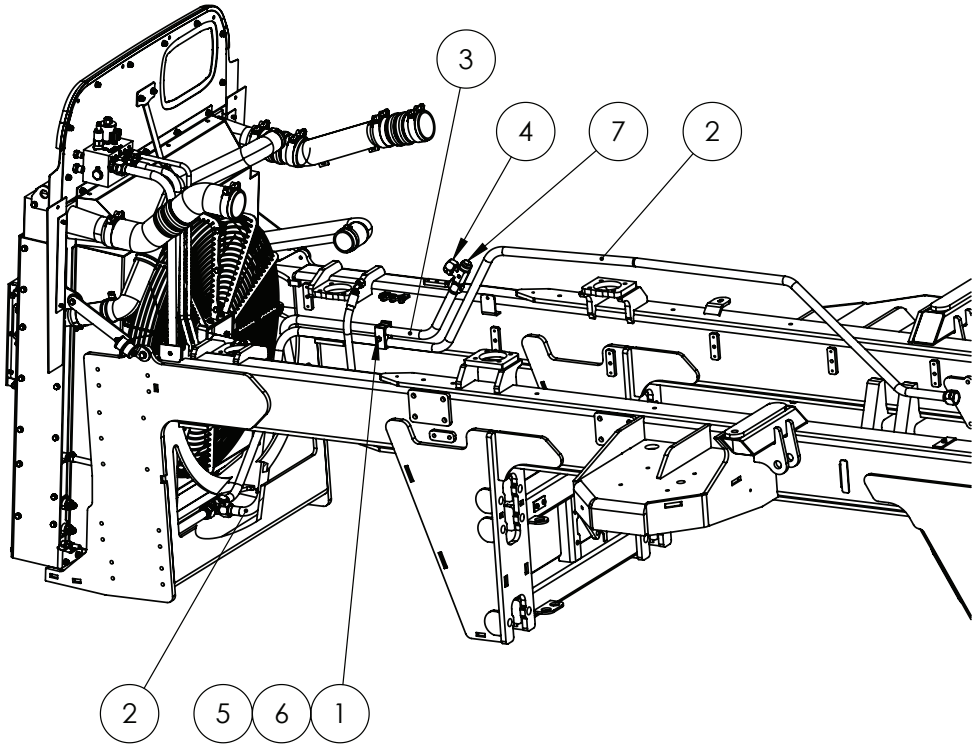

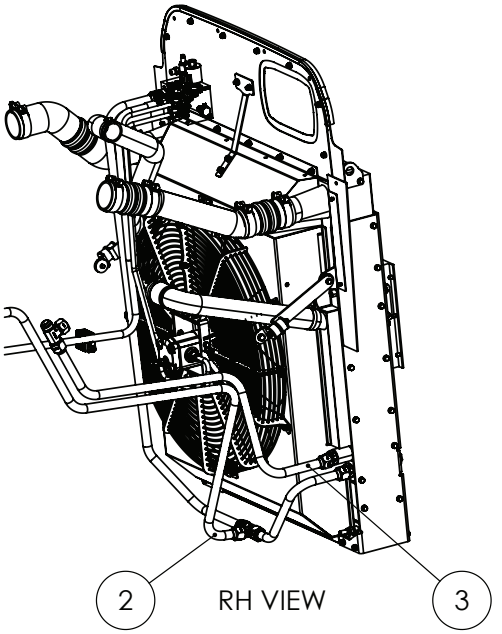

IF DESCRIPTION PREFIX IS ASSEMBLY DRAWING ONLY OR PRODUCTION DRAWING ONLY THE ITEM IS NOT FOR SALE			
ITEM	PART NUMBER	DESCRIPTION	QTY
1	GA5004727	BOLT M8 X 50 GR8.8 ZP	1
2	GA3501778	HYDRAULIC PIPE, CHASSIS MANIFOLD TANK TO COOLER, LF SP S3	1
3	GA3501841	HYDRAULIC PIPE, COOLER RETURN A, LF SP S3	1
4	S65-21	HYDRAULIC ADAPTOR, CAP, 1 5/16" JIC FEMALE, S65-21	1
5	GA5078036	Mounting clamp, Double type, Jaw, Pair, Group 3, 25.4mm, RCD-254J	1
6	GA5078046	MOUNTING CLAMP, DOUBLE TYPE, PLATE, TOP, GROUP 3, RCD-3PT	1
7	GA3501847	HYDRAULIC ADAPTOR, TEE, 1 5/16" JIC MALE X 1 5/16" JIC MALE X 1 5/16" JIC MALE, S19-212121	1
GA7800282 GOLDACRES		ASSEMBLY DRAWING ONLY, HYDRAULIC OIL RESERVOIR INSTALLATION	REV 00

Hydraulic Reservoir, Mounting

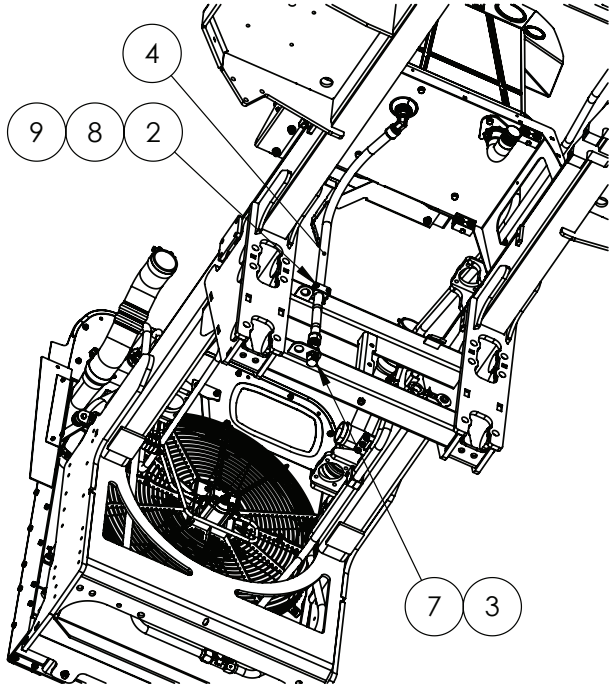

BOTTOM VIEW

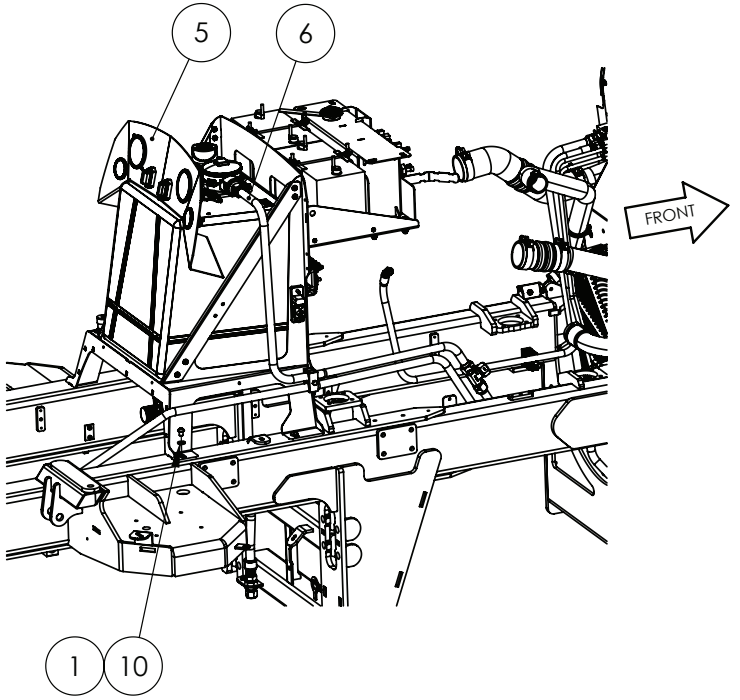

IF DESCRIPTION PREFIX IS ASSEMBLY DRAWING ONLY OR PRODUCTION DRAWING ONLY THE ITEM IS NOT FOR SALE			
ITEM	PART NUMBER	DESCRIPTION	QTY
1	GA5069890	BHCS M12 x 16 GR12.9 ZP	4
2	GA5011449	BOLT M6 X 45 GR8.8 ZP	2
3	GA3501302	HYDRAULIC ADAPTOR, BULKHEAD NIPPLE, 1-1/16" JIC X 1-1/16" JIC, S10-1717	1
4	GA3501846	HYDRAULIC HOSE ASSEMBLY, HYD OIL DRAIN	1
5	GA6101953	HYDRAULIC OIL RESERVOIR ASSEMBLY, LF SP S3	1
6	GA3501851	HYDRAULIC PIPE, COOLER RETURN B, LF SP S3	1
7	GA3500795	HYDRAULIC ADAPTOR, CAP, 1 1/16" JIC FEMALE, S65-17	1
8	GA5024110	SINGLE CLAMP PLATE TOP GR4	1
9	GA5024115	SINGLE CLAMP RIBBED JAW 28mm GR4	1
10	GA5000577	WASHER M12 FLAT SS HD	4
GA7800282 GOLDACRES		ASSEMBLY DRAWING ONLY, HYDRAULIC OIL RESERVOIR INSTALLATION	REV 00

Chassis, Fuel Tank Mounting

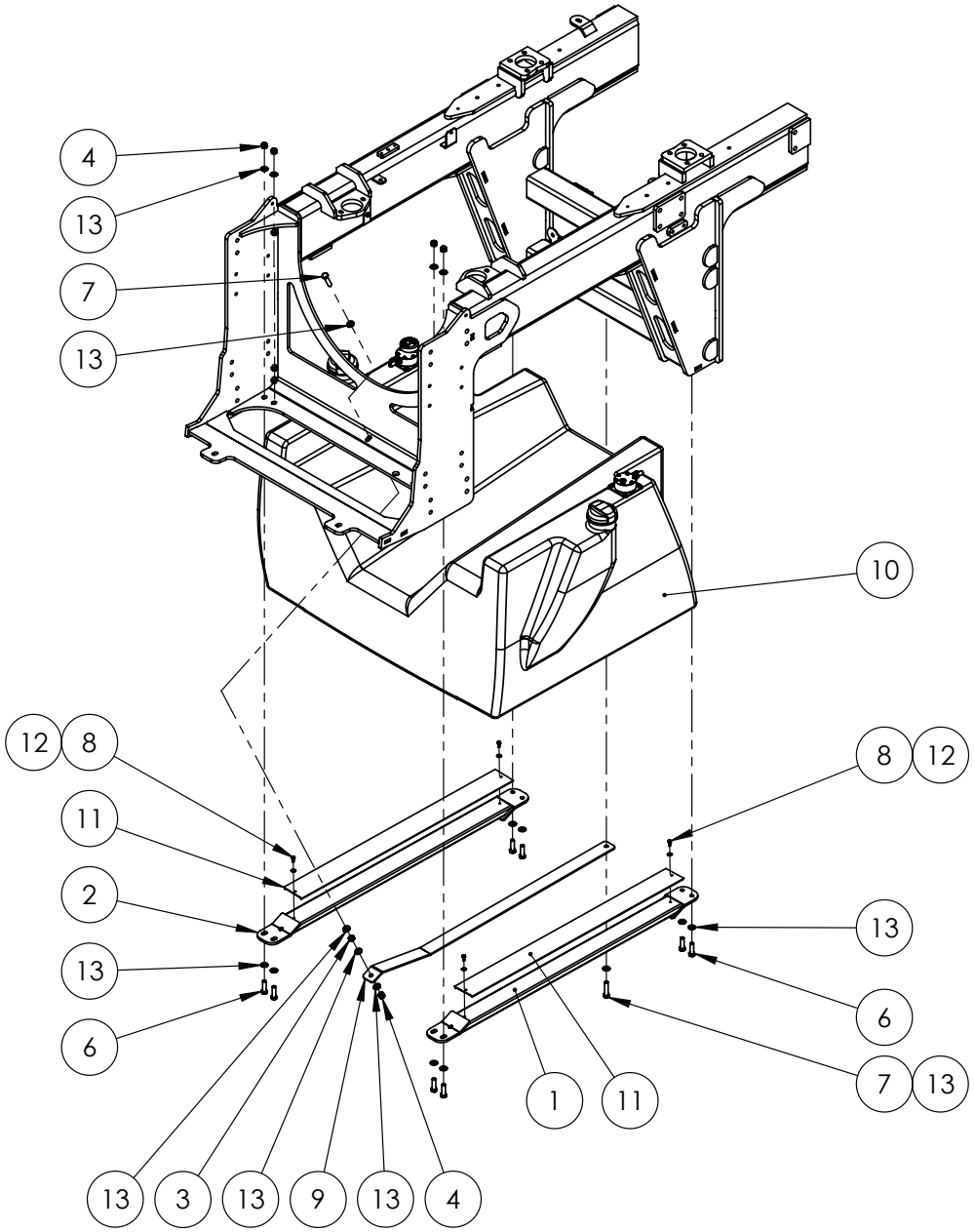

IF DESCRIPTION PREFIX IS ASSEMBLY DRAWING ONLY OR PRODUCTION DRAWING ONLY THE ITEM IS NOT FOR SALE			
ITEM	PART NUMBER	DESCRIPTION	QTY
1	GA4605035	MOUNTING, FUEL TANK, LHS, LARGE FRAME S3	1
2	GA4605043	MOUNTING, FUEL TANK, RHS, LARGE FRAME S2	1
3	GA5071280	NUT M12 HEX HALF ZP	1
4	GA5012461	NUT M12 NYLOC ZP	5
5	GA5000305	SET SCREW M12 X 30 GR8.8 ZP	4
6	GA5000319	SET SCREW M12 X 40 GR8.8 ZP	4
7	GA5011237	SET SCREW M12 X 50 GR8.8 ZP	2
8	GA0500022	SET SCREW SELF TAPPING TRILOBE M6 X 16 ZP	4
9	GA4407815	STRAP, FUEL TANK, OUTER, G6 MY20	1
10	GA4908955	TANK ASSEMBLY, FUEL, SERIES 3	1
11	GA5025966	TANK SUPPORT, RUBBER, 75mm WIDE, 2.5mm THICK	2
12	GA5017643	WASHER 1/4" X 5/8" FLAT SS	4
13	GA5000577	WASHER M12 FLAT SS HD	13
14	GA5003651	WASHER M8 FLAT SS	4
GA7800274 GOLDACRES		ASSEMBLY DRAWING ONLY, FUEL TANK INSTALLATION, SERIES 3	REV D

Fuel Tank Assembly

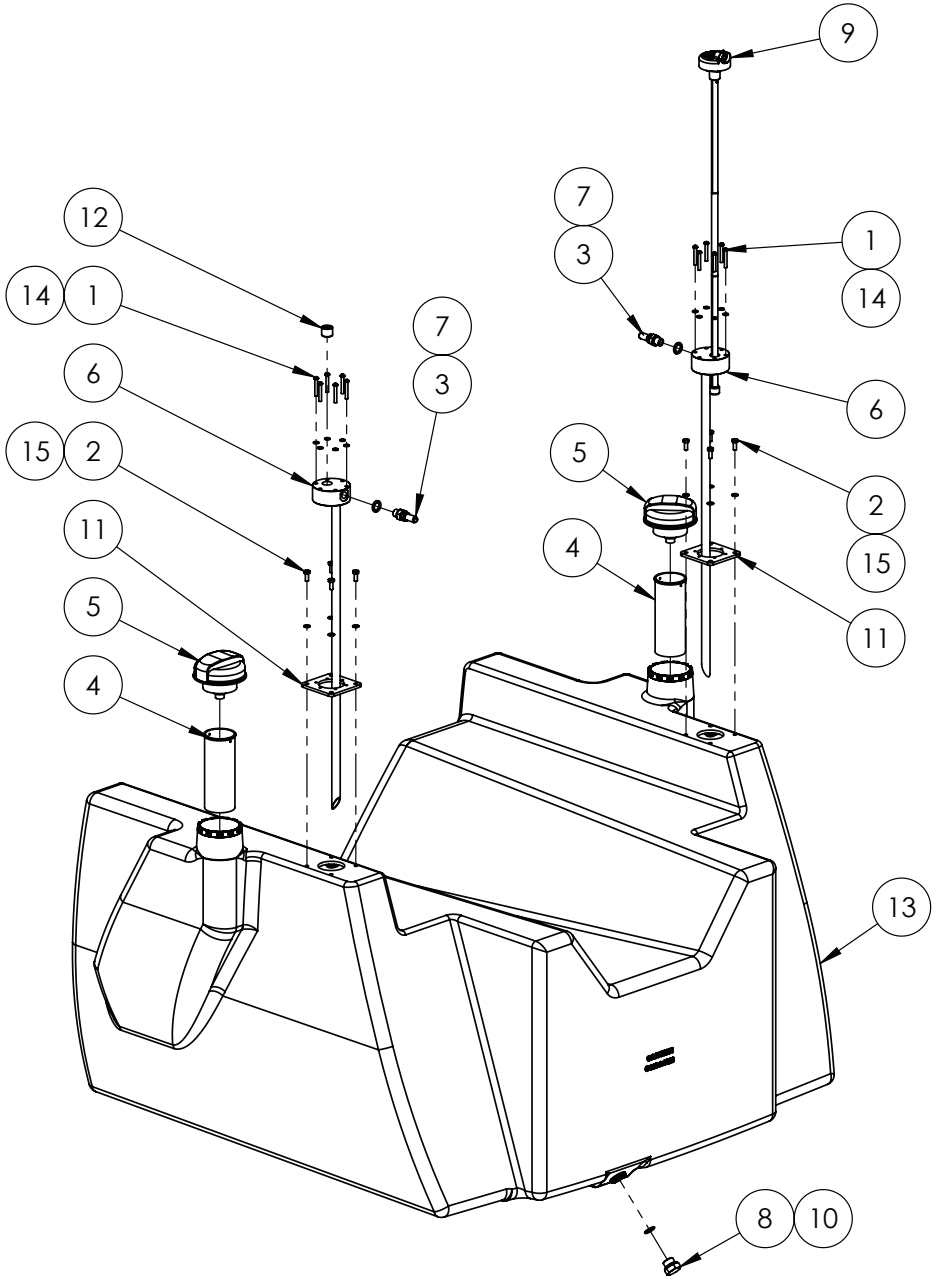

IF DESCRIPTION PREFIX IS ASSEMBLY DRAWING ONLY OR PRODUCTION DRAWING ONLY THE ITEM IS NOT FOR SALE			
ITEM	PART NUMBER	DESCRIPTION	QTY
1	GA0500142	BHCS M5 X 35 SS A2-70	12
2	GA5004041	BOLT M6 X 16 GR8.8 ZP	8
3	GA5078829	BRASS FITTING, PUSH-TO-CONNECT, STRAIGHT, 1/2 MALE SAE J2044 TO M14 MALE	2
4	GA4562305	EXTENSION TUBE, FUEL FILLER, FUEL TANK, G4, S2	2
5	GA5078827	FUEL CAP, NON LOCKING, MALE SCREW DIAM 65X6.5mm, VENTED BY EQUA VALVE WITH 1 MICRON FILTER, 02347800	2
6	GA4951890	FUEL PICKUP, SP S3	2
7	GA3500130	HYDRAULIC ADAPTOR, SEAL, METAL BONDED, SUIT M14 MALE THREAD, MBD-14, RYCO	2
8	GA3500301	HYDRAULIC ADAPTOR, PLUG, 1/2" BSPP MALE, S73-08	1
9	GA5078900	LEVEL SENSOR, DIESEL, 1/2"BSPT CONNECTION, 0-5V OUTPUT, 650mm	1
10	GA5053135	O RING 18 X 2 SUIT SPRAY STOP BODY	1
11	GA4413115	PLATE, MOUNT, FUEL SENDER, COBO	2
12	GA5070305	PLUG 1/2" FLUSH FIT	1
13	GA8500051	TANK, FUEL, LF SP S3	1
14	GA5003983	WASHER 5mm FLAT SS	12
15	GA5004437	WASHER 6mm FLAT SS	8
GA4908955 GOLDACRES		TANK ASSEMBLY, FUEL, SERIES 3	REV 00.C

Rinse Tank Mounting

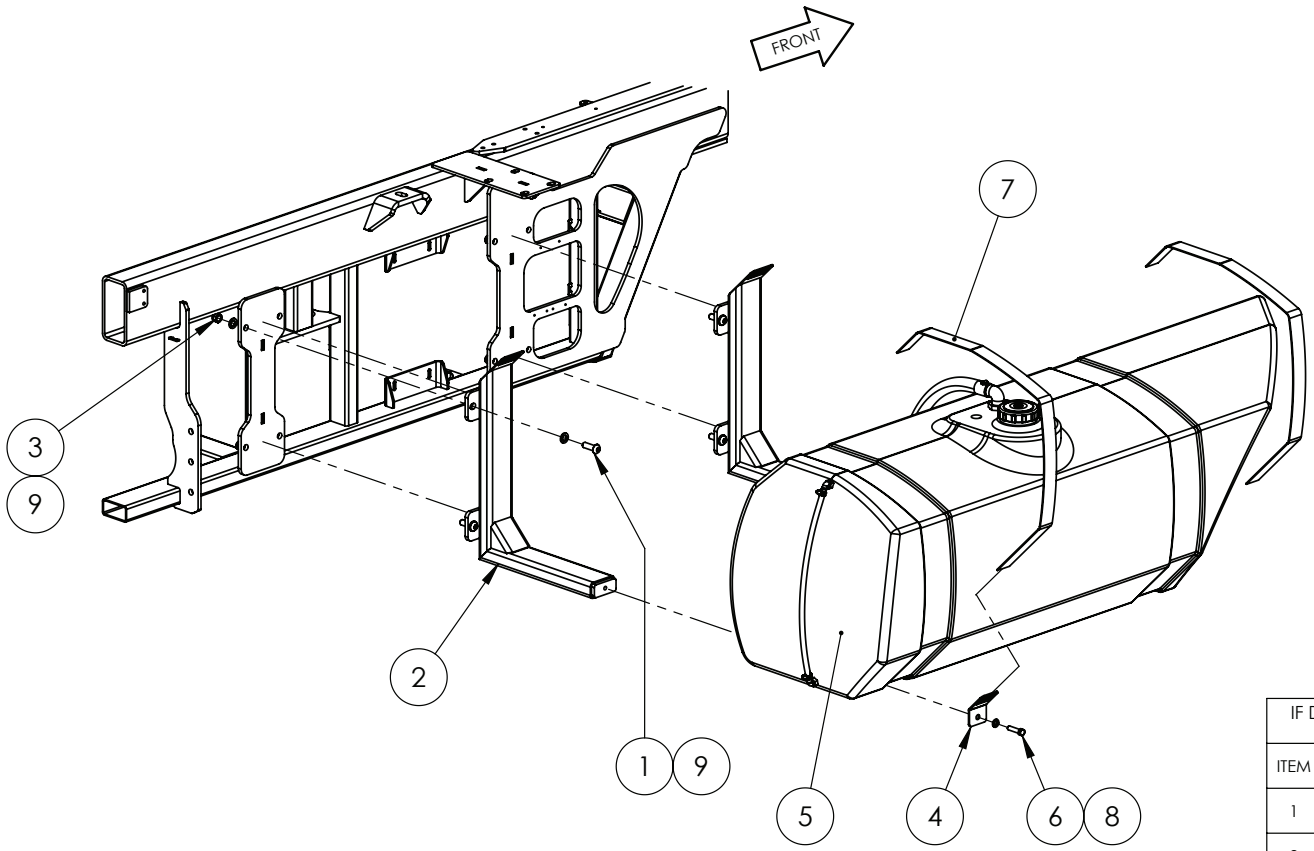

IF DESCRIPTION PREFIX IS ASSEMBLY DRAWING ONLY OR PRODUCTION DRAWING ONLY THE ITEM IS NOT FOR SALE			
ITEM	PART NUMBER	DESCRIPTION	QTY
1	GA5075140	BHCS M16 X 50 GR12.9 ZP	8
2	GA4605089	MOUNTING BRACKET, RINSE WATER TANK, LARGE FRAME S3	2
3	GA5001029	NUT M16 NYLOC ZP	8
4	GA4414740	PLATE, BRACKET, TANK STRAP, 50mm, 30 DEGREE	2
5	GA4909532	RINSE WATER TANK ASSEMBLY S3 MY25	1
6	GA5011237	SET SCREW M12 X 50 GR8.8 ZP	2
7	GA5003859	TANK STRAP, RINSE TANK, G6 MY20 - CUT 1450mm APPROX	2
8	GA5000577	WASHER M12 FLAT SS HD	2
9	GA5001043	WASHER M16 FLAT SS HD	16
GA7800314 GOLDACRES		ASSEMBLY DRAWING ONLY, RINSE TANK, LARGE FRAME S3	REV 01

Cabin Crossmember, Mounting

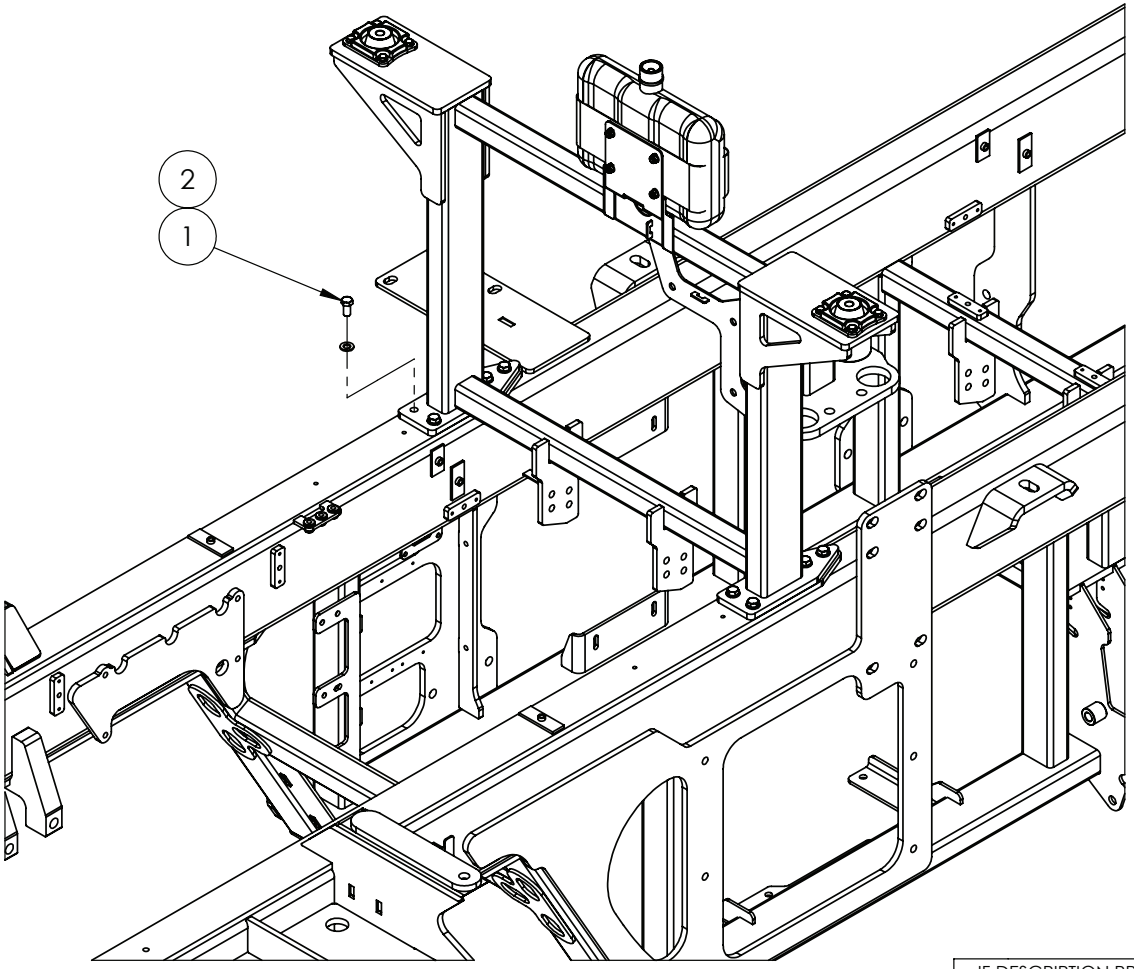

IF DESCRIPTION PREFIX IS ASSEMBLY DRAWING ONLY OR PRODUCTION DRAWING ONLY THE ITEM IS NOT FOR SALE			
ITEM	PART NUMBER	DESCRIPTION	QTY
1	GA5011229	SET SCREW M12 X 25 GR8.8 ZP	8
2	GA5000577	WASHER M12 FLAT SS HD	8
GA7800283 GOLDACRES		ASSEMBLY DRAWING ONLY, CABIN CROSS MEMBER, LARGE FRAME S3	REV 00.B

Cabin Crossmember, Assembly

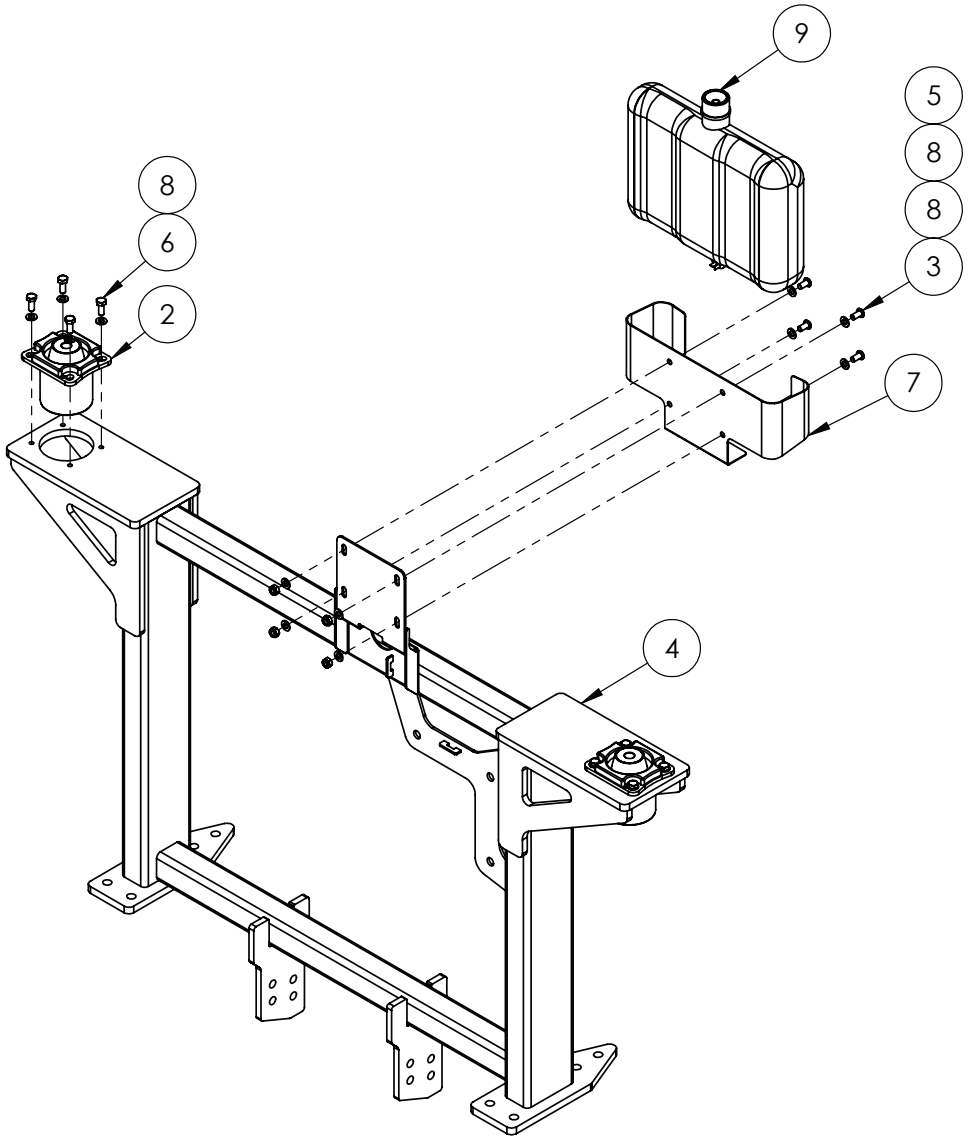

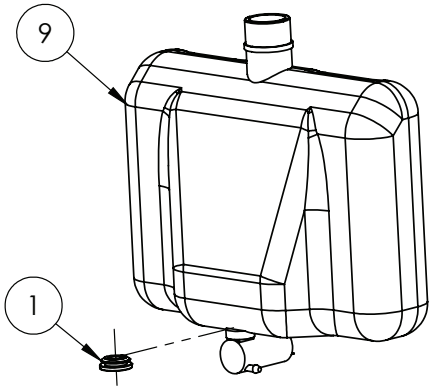

IF DESCRIPTION PREFIX IS ASSEMBLY DRAWING ONLY OR PRODUCTION DRAWING ONLY THE ITEM IS NOT FOR SALE			
ITEM	PART NUMBER	DESCRIPTION	QTY
1	GA5012199	29mm NEOPRENE GROMMET	1
2	GA5026211	ANTI VIBRATION MOUNT , HYDROCONE, 32 SUPPORT, 50 SHORE, 177105	2
3	GA5004696	BHCS M8 X 16 SS A2-70	4
4	GA4604945	CROSSMEMBER, CABIN, REAR, CROP CRUISER, LARGE FRAME SP, S3	1
5	GA5004917	NUT M8 NYLOC ZP	4
6	GA5004085	SET SCREW M8 X 20 GR8.8 ZP	8
7	GA4505035	WASHER BOTTLE MOUNTING BRACKET	1
8	GA5003643	WASHER M8 FLAT SS HD	16
9	GA5070785	WINDSCREEN WASHER BOTTLE 5.8L	1
GA7800283 GOLDACRES		ASSEMBLY DRAWING ONLY, CABIN CROSS MEMBER, LARGE FRAME S3	REV 00.B

Transfer Case Mounting

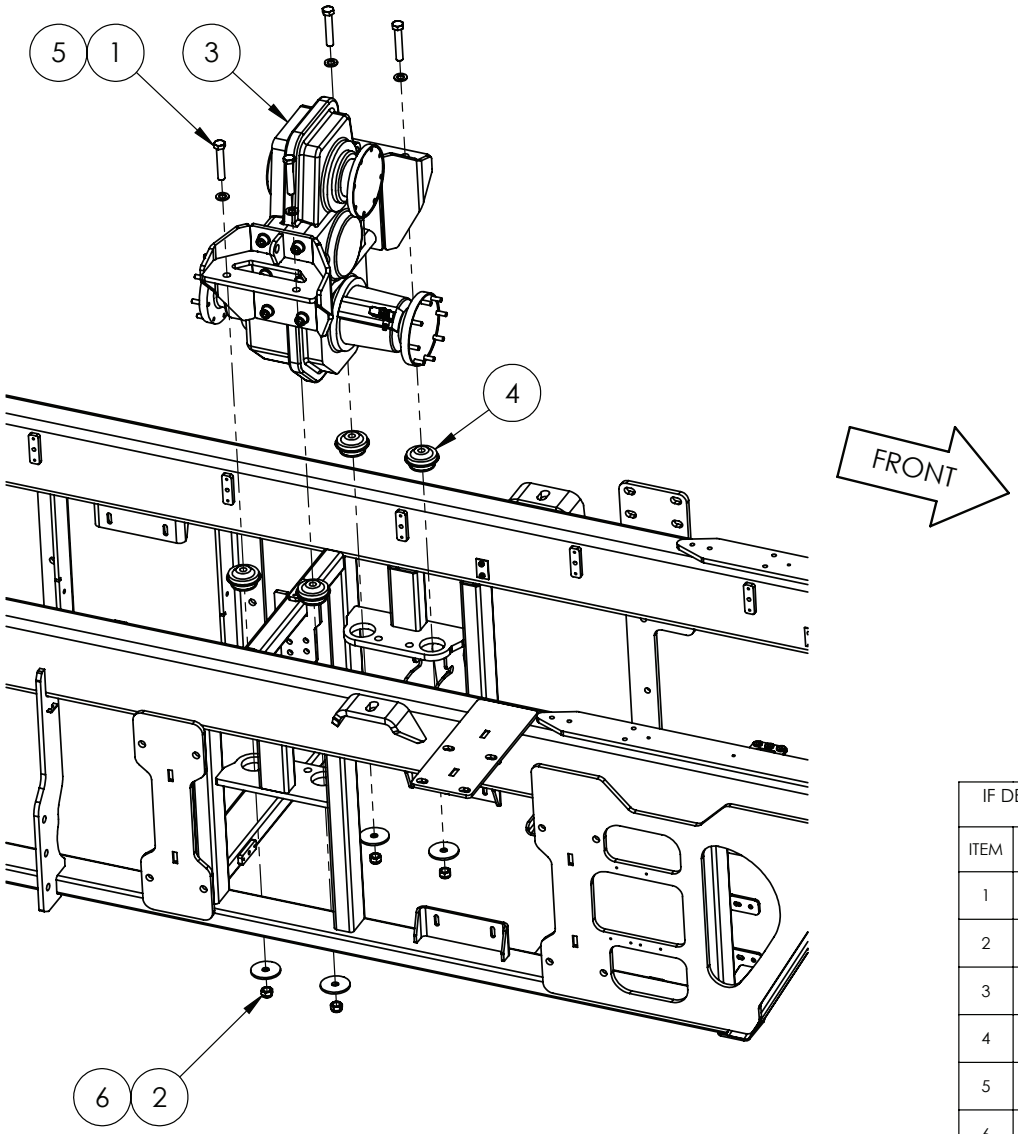

IF DESCRIPTION PREFIX IS ASSEMBLY DRAWING ONLY OR PRODUCTION DRAWING ONLY THE ITEM IS NOT FOR SALE			
ITEM	PART NUMBER	DESCRIPTION	QTY
1	GA5011297	BOLT M16 X 90 GR8.8 ZP	4
2	GA5001029	NUT M16 NYLOC ZP	4
3	GA4909493	PRODUCTION DRAWING ONLY, TRANSFER CASE, LARGE FRAME S3	1
4	GA5070020	VIBRATION ISOLATOR - 80mm	4
5	GA5001043	WASHER M16 FLAT SS HD	4
6	GA4502820	WASHER, 70mm OD X 16.5mm ID X 5mm THICK	4
GA7800247 GOLDACRES		ASSEMBLY DRAWING ONLY, TRANSFER CASE INSTALLATION, S3	REV 00

Ride Height Control Valve, Front

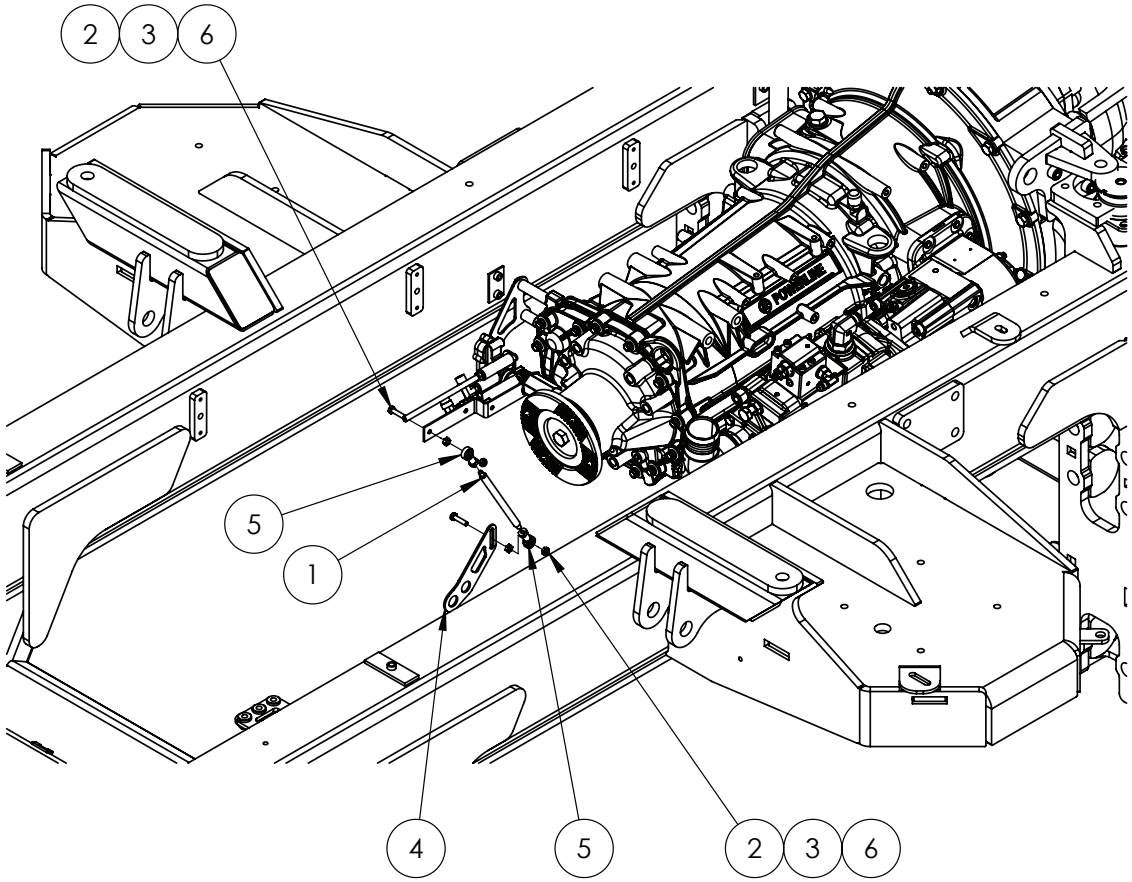

IF DESCRIPTION PREFIX IS ASSEMBLY DRAWING ONLY OR PRODUCTION DRAWING ONLY THE ITEM IS NOT FOR SALE			
ITEM	PART NUMBER	DESCRIPTION	QTY
1	GA4583650	LINK ROD, STEER ANGLE SENSOR, ADJUSTABLE AXLE, 2-3m, G4 S2	1
2	GA5048115	NUT M6 NYLOC ZP	2
3	GA5004397	NUT M6 ZP	2
4	GA4000371	PLATE, RIDE HEIGHT CONTROL, FRONT AXLE ATTACHMENT, LARGE FRAME, S3	1
5	GA5052725	ROD END 6mm FEMALE	2
6	GA5004073	SET SCREW M6 X 25 GR8.8 ZP	2
GA7800364 GOLDACRES		ASSEMBLY DRAWING, RIDE HEIGHT CONTROLL VALVE, FRONT, LARGE FRAME S3	REV 00

Ride Height Control Valve Mounting, Rear Axle

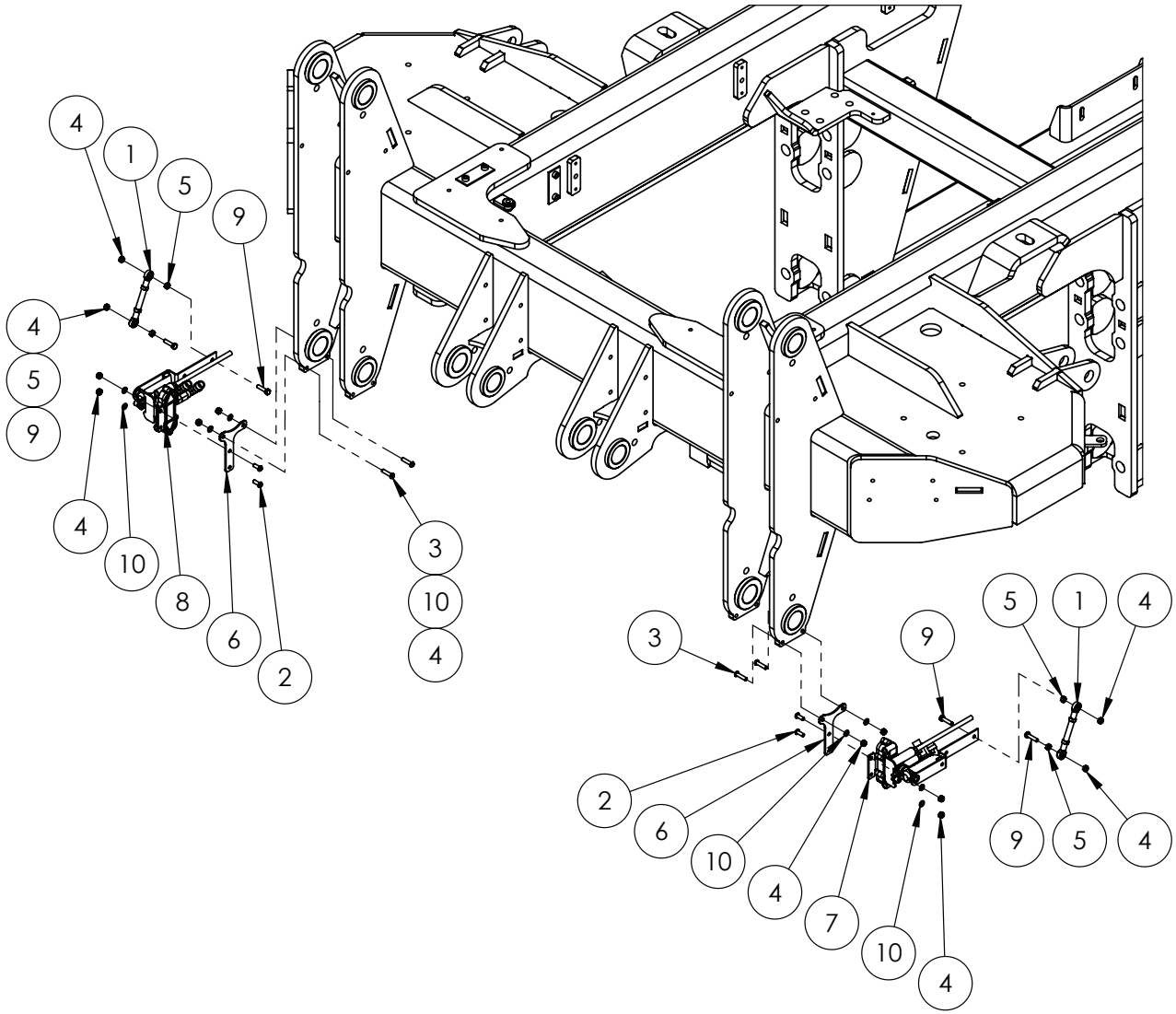

IF DESCRIPTION PREFIX IS ASSEMBLY DRAWING ONLY OR PRODUCTION DRAWING ONLY THE ITEM IS NOT FOR SALE			
ITEM	PART NUMBER	DESCRIPTION	QTY
1	GA4909410	ASSEMBLY DRAWING ONLY RIDE HEIGHT LINK, SHORT	2
2	GA5004050	BHCS M6 X 16 SS A2-70	4
3	GA5004067	BHCS M6 X 25 SS A2-70	4
4	GA5048115	NUT M6 NYLOC ZP	12
5	GA5049030	NUT M6 SS	4
6	GA4000053	PLATE, RIDE HEIGHT CONTROL MOUNTING, LARGE FRAME, S2	2
7	GA4949465	RIDE HEIGHT CONTROL VALVE, ASSEMBLY, REAR LEFT, G6 MY20	1
8	GA4949460	RIDE HEIGHT CONTROL VALVE, ASSEMBLY, REAR RIGHT, G6 MY20	1
9	GA5004073	SET SCREW M6 X 25 GR8.8 ZP	4
10	GA5004437	WASHER M6 FLAT SS HD	8
GA7800288 GOLDACRES		ASSEMBLY DRAWING, REAR RIDE HEIGHT CONTROLL VALVES, LARGE FRAME S3	REV 00

Ride Height Control Valve Assembly, Rear, RH

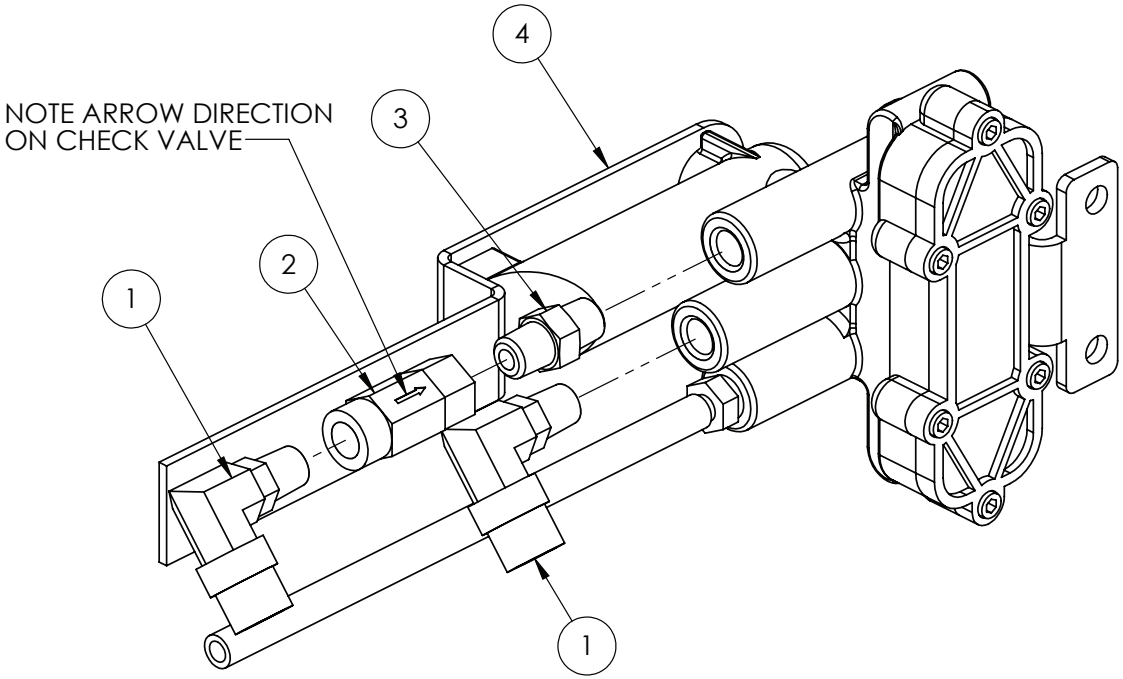

IF DESCRIPTION PREFIX IS ASSEMBLY DRAWING ONLY OR PRODUCTION DRAWING ONLY THE ITEM IS NOT FOR SALE			
ITEM	PART NUMBER	DESCRIPTION	QTY
1	GA5078525	AIR FITTING, ELBOW, SWIVEL, 3/8" TUBE, 1/8" NPT MALE, PUSH IN, BRASS, ALKON - AQ69-DOTS-6X2	2
2	GA5018147	CHECK VALVE INLINE 1/8" NPT FEMALE	1
3	GA5025395	PNEUMATIC ADAPTOR, NIPPLE, 1/8" NPT MALE X 1/8" NPT MALE	1
4	GA2500003	RIDE HEIGHT VALVE, HALDEX 9054007	1
GA4949460 GOLDACRES		RIDE HEIGHT CONTROL VALVE, ASSEMBLY, REAR RIGHT, G6 MY20	REV 00

Ride Height Control Valve Assembly, Rear, LH

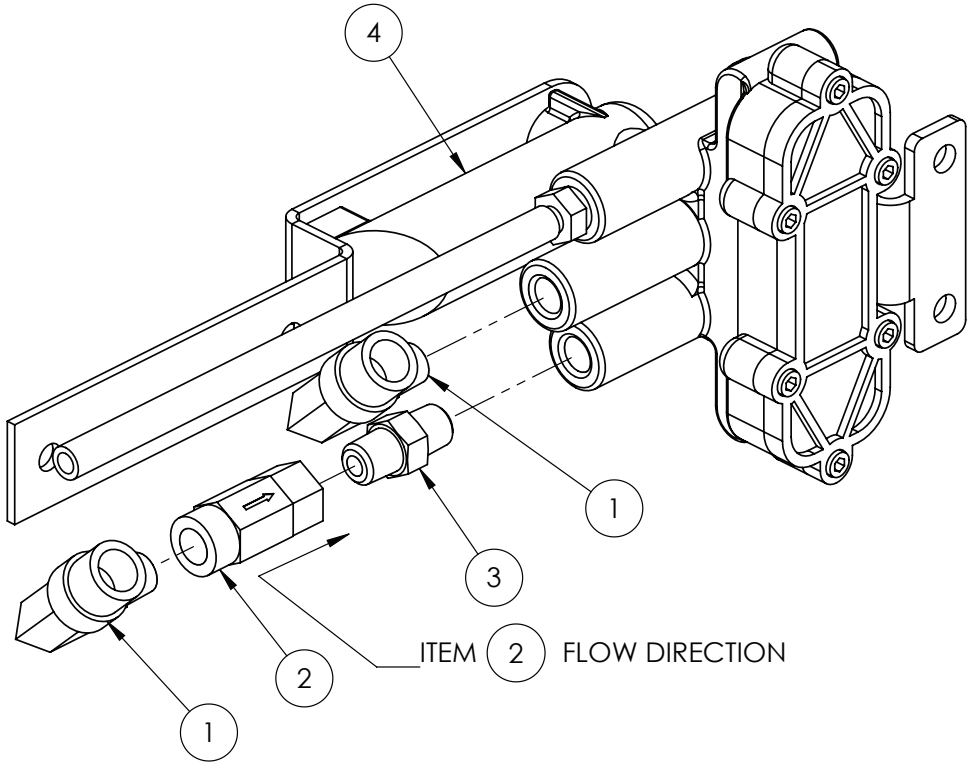

IF DESCRIPTION PREFIX IS ASSEMBLY DRAWING ONLY OR PRODUCTION DRAWING ONLY THE ITEM IS NOT FOR SALE			
ITEM	PART NUMBER	DESCRIPTION	QTY
1	GA5078525	AIR FITTING, ELBOW, SWIVEL, 3/8" TUBE, 1/8" NPT MALE, PUSH IN, BRASS, ALKON - AQ69-DOTS-6X2	2
2	GA5018147	CHECK VALVE INLINE 1/8" NPT FEMALE	1
3	GA5025395	PNEUMATIC ADAPTOR, NIPPLE, 1/8" NPT MALE X 1/8" NPT MALE	1
4	GA2500003	RIDE HEIGHT VALVE, HALDEX 9054007	1
GA4949465 GOLDACRES		RIDE HEIGHT CONTROL VALVE, ASSEMBLY, REAR LEFT, G6 MY20	REV 00.B

Ride Height Link, Short

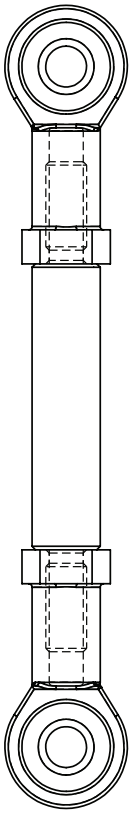

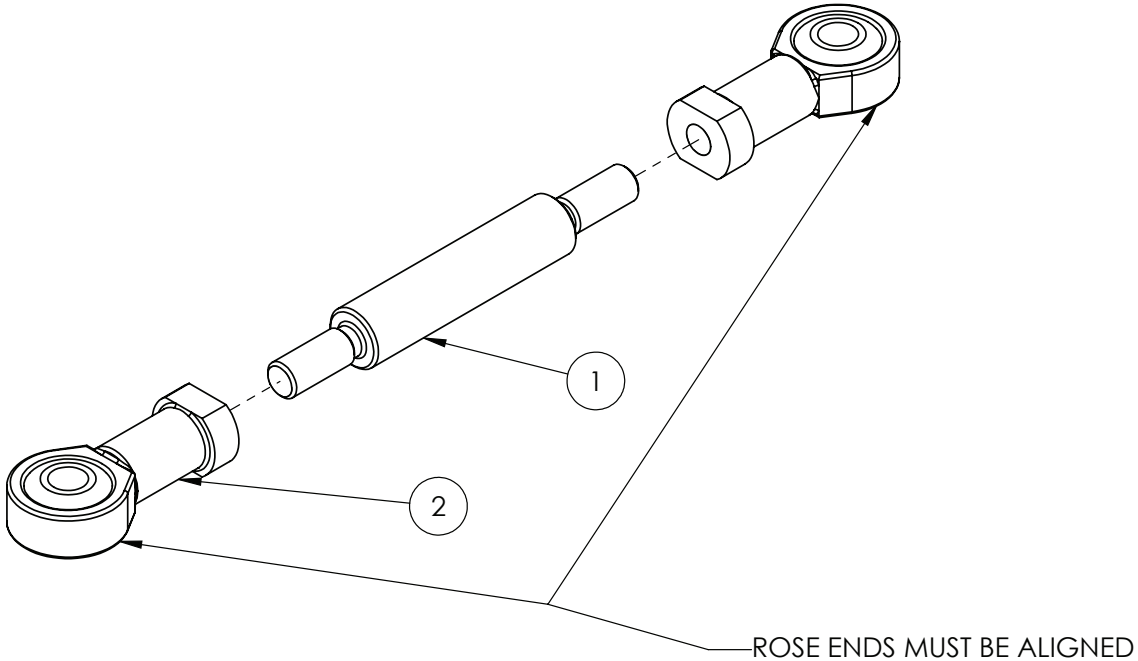

IF DESCRIPTION PREFIX IS ASSEMBLY DRAWING ONLY OR PRODUCTION DRAWING ONLY THE ITEM IS NOT FOR SALE			
ITEM	PART NUMBER	DESCRIPTION	QTY
1	GA4551275	LINK ROD, RIDE HEIGHT, G6, MY20	1
2	GA5052725	ROD END 6mm FEMALE	2
GA4909410 GOLDACRES		ASSEMBLY DRAWING ONLY RIDE HEIGHT LINK, SHORT	REV 00

RH Pod, Spray Pump, Mounting

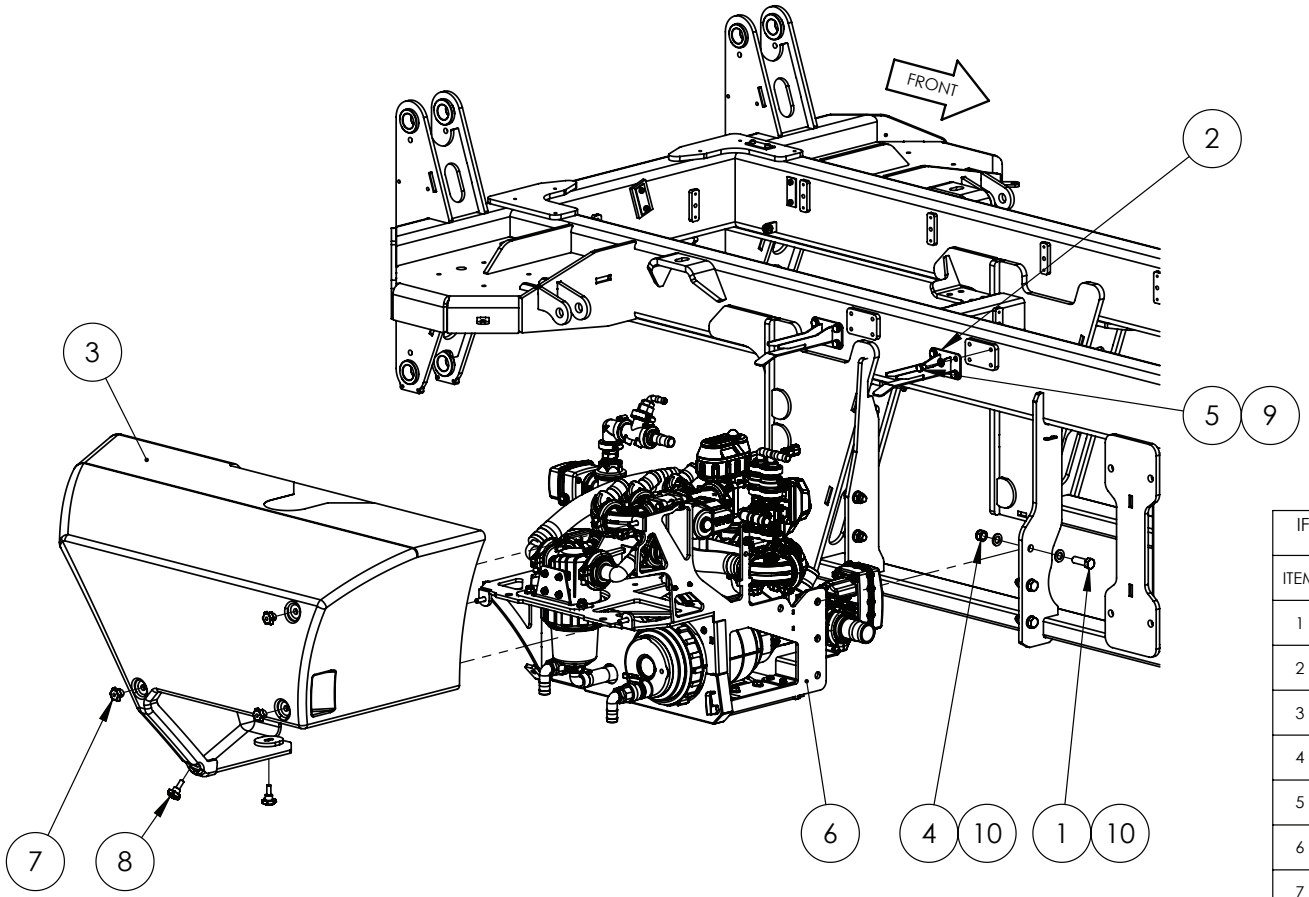

IF DESCRIPTION PREFIX IS ASSEMBLY DRAWING ONLY OR PRODUCTION DRAWING ONLY THE ITEM IS NOT FOR SALE			
ITEM	PART NUMBER	DESCRIPTION	QTY
1	GA5000931	BOLT M16 X 50 GR8.8 ZP	6
2	GA4605028	BRACKET, PUMP POD MOUNT, SERIES 3, SELF PROPELLED	2
3	GA5079029	COVER, PUMP POD, ROTOMOLDED PLASTIC, SERIES 3, SELF PROPELLED	1
4	GA5001029	NUT M16 NYLOC ZP	6
5	GA5006143	SET SCREW M10 X 16 GR8.8 ZP	8
6	GA6101850	SPRAY PUMP POD, CONFIGURABLE, SP SERIES 3	1
7	GA0500181	STAR GRIP, FEMALE, M10, K0155.2101	3
8	GA0500180	STAR GRIP, MALE, M10, K0155.410X25	2
9	GA5000117	WASHER M10 FLAT SS HD	8
10	GA5001043	WASHER M16 FLAT SS HD	12
GA7800290 GOLDACRES		ASSEMBLY DRAWING ONLY, SPRAY PUMP POD, LARGE FRAME SP S3, MY25	REV 00

Tool Box Mounting

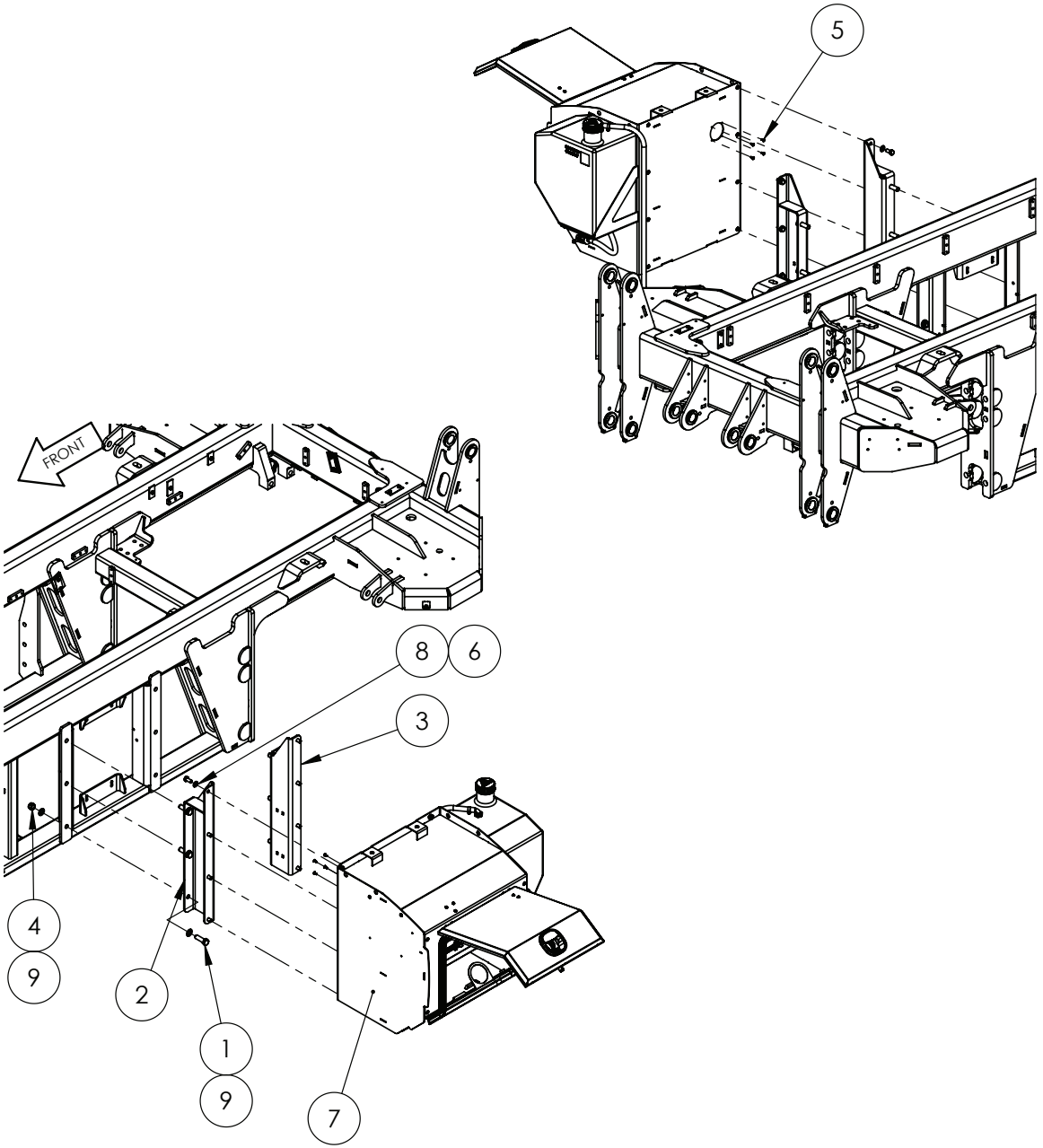

IF DESCRIPTION PREFIX IS ASSEMBLY DRAWING ONLY OR PRODUCTION DRAWING ONLY THE ITEM IS NOT FOR SALE			
ITEM	PART NUMBER	DESCRIPTION	QTY
1	GA5000931	BOLT M16 X 50 GR8.8 ZP	6
2	GA4405875	BRACKET, TOOL BOX MOUNT A, G6 MY20	1
3	GA4405880	BRACKET, TOOL BOX MOUNT B, G4 MY23	1
4	GA5001029	NUT M16 NYLOC ZP	6
5	GA5054395	SCREW MUSHROOM HEAD 4.2 X 16mm BLACK SELF TAPPER	4
6	GA5011229	SET SCREW M12 X 25 GR8.8 ZP	8
7	GA6101952	TOOL BOX ASSEMBLY, S3	1
8	GA5000577	WASHER 12mm FLAT SS HD	8
9	GA5001043	WASHER M16 FLAT SS HD	12
GA7800311 GOLDACRES		ASSEMBLY DRAWING ONLY, TOOL BOX, LARGE FRAME, S3	REV 00

Toolbox, Shelf Mounting

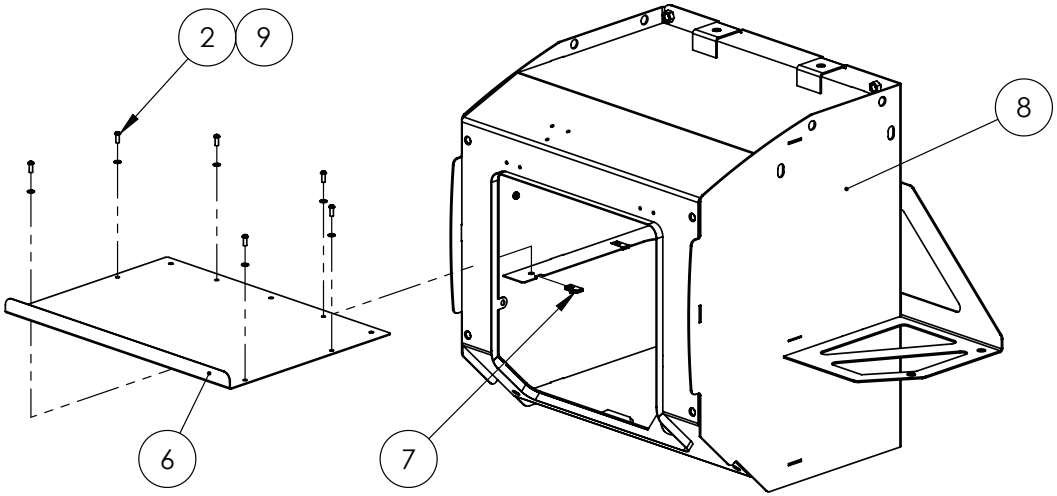

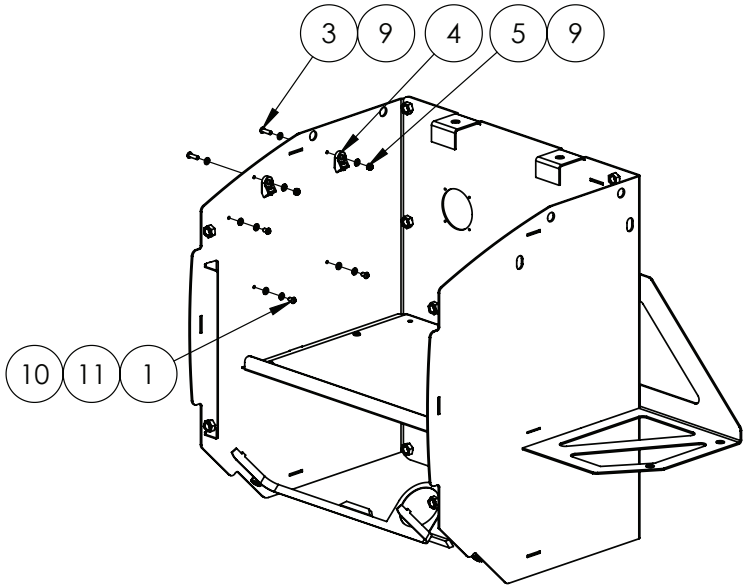

TOOLBOX WITHOUT FRONT PANEL TO SHOW HARNESS CLIPS

IF DESCRIPTION PREFIX IS ASSEMBLY DRAWING ONLY OR PRODUCTION DRAWING ONLY THE ITEM IS NOT FOR SALE			
ITEM	PART NUMBER	DESCRIPTION	QTY
1	GA5004023	BHCS M6 X 10 SS A2-70	3
2	GA5004047	BHCS M6 X 16 GR12.9 ZP	6
3	GA5004053	BHCS M6 X 20 SS A2-70	2
4	GA5026172	HARNESS CLIP, 36mm X 19mm M8 HOLE HI-IMPACT UV BK	2
5	GA5048115	NUT M6 NYLOC ZP	2
6	GA4411710	PLATE, SHELF, TOOL BOX FRAME, G6 MY20	1
7	GA5066830	SPEED CLIP M6	6
8	GA4602405	TOOL BOX FRAME, G6 MY20	1
9	GA5004437	WASHER 6mm FLAT SS	10
10	GA5004437	WASHER M6 FLAT SS HD	3
11	GA5004447	WASHER M6 SPRING SS	3
GA6101952-01 GOLDACRES		ASSEMBLY DRAWING ONLY, TOOL BOX, S3	REV 00

Toolbox, Hand Wash Tank Mounting

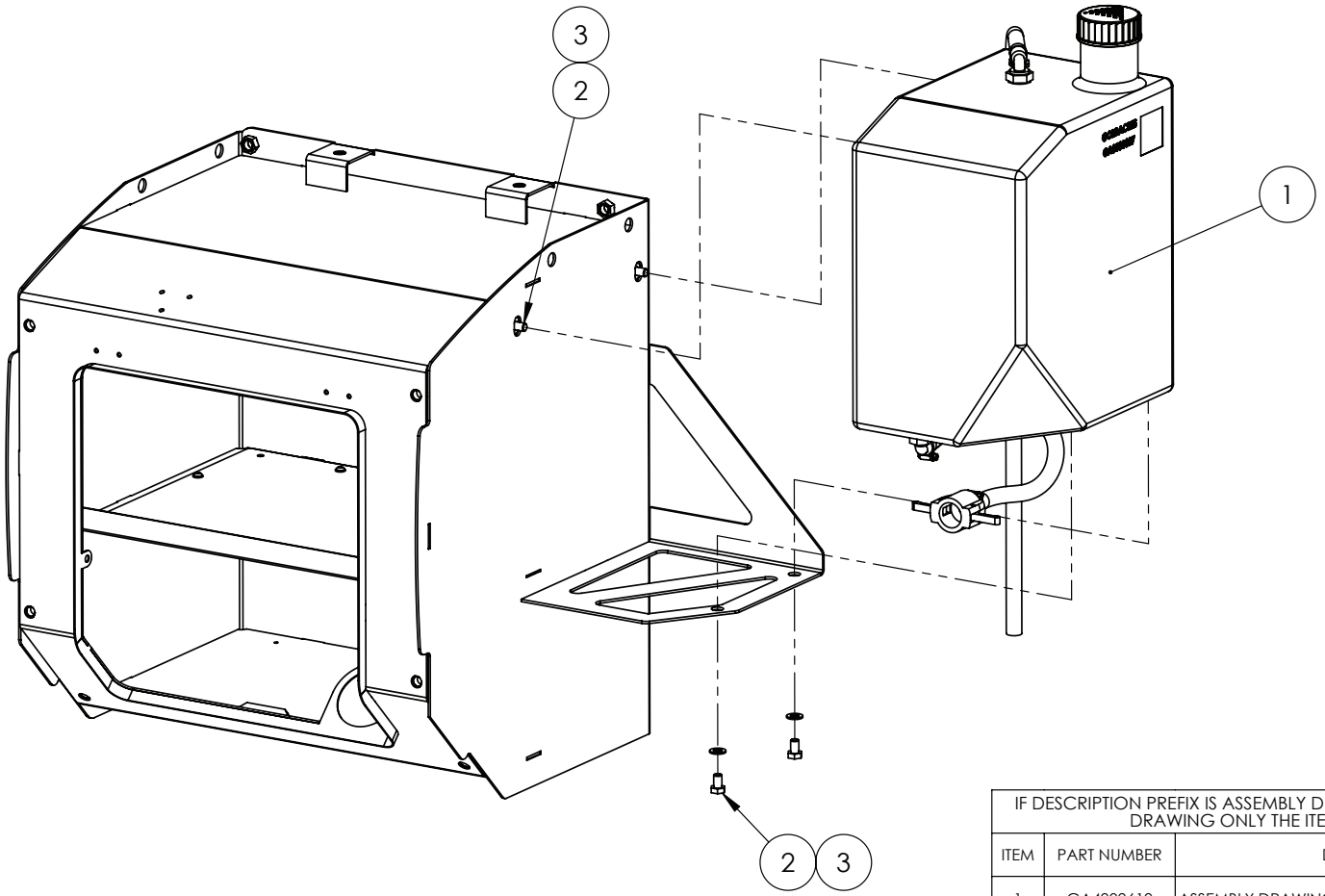

IF DESCRIPTION PREFIX IS ASSEMBLY DRAWING ONLY OR PRODUCTION DRAWING ONLY THE ITEM IS NOT FOR SALE			
ITEM	PART NUMBER	DESCRIPTION	QTY
1	GA4909619	ASSEMBLY DRAWING ONLY, HAND WASH TANK, S3	1
2	GA5006143	SET SCREW M10 X 16 GR8.8 ZP	4
3	GA5000117	WASHER 10mm FLAT SS HD	4
GA6101952-02 GOLDACRES		ASSEMBY DRAWING ONLY, TOOL BOX, S3	REV 00

Toolbox, External Display Mounting, G-Hub

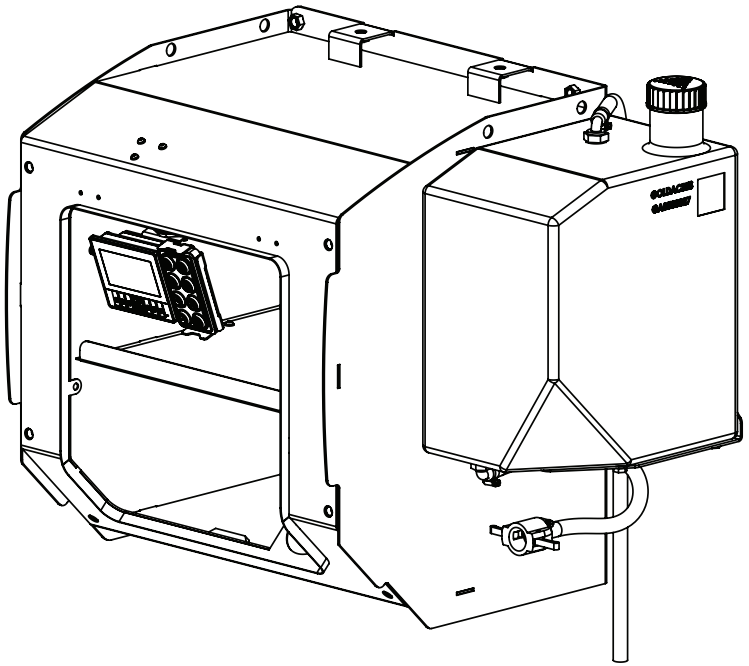

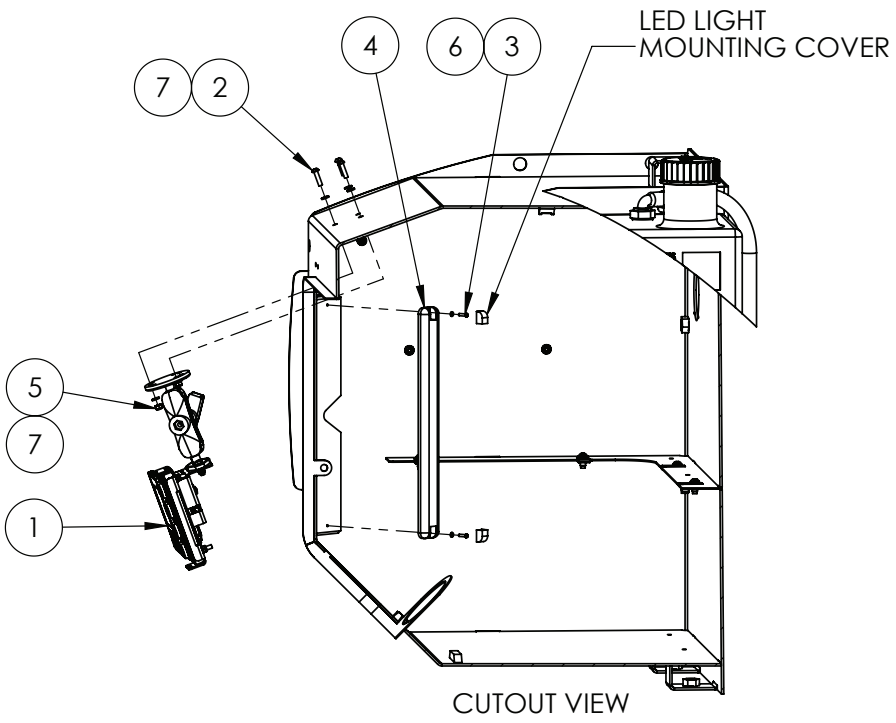

CUTOUT VIEW

IF DESCRIPTION PREFIX IS ASSEMBLY DRAWING ONLY OR PRODUCTION DRAWING ONLY THE ITEM IS NOT FOR SALE			
ITEM	PART NUMBER	DESCRIPTION	QTY
1	GA6101969	ASSEMBLY DRAWING ONLY GHUB EXTERNAL DISPLAY, SUIT TOOL BOX	1
2	GA0500004	BHCS M5 X 20 SS A2-70	3
3	GA5003083	BOLT PAN HEAD M3 X 12	2
4	GA4950005	LIGHT, LED STRIP LIGHT, ASSEMBLY, G6, TOOLBOX	1
5	GA5003974	NUT M5 NYLOC ZP	3
6	GA5011351	WASHER 3mm FLAT SS	2
7	GA5003983	WASHER 5mm FLAT SS	6
GA6101952-03 GOLDACRES		ASSEMBLY DRAWING ONLY, TOOL BOX, S3	REV 00

External Display Assembly, G-Hub

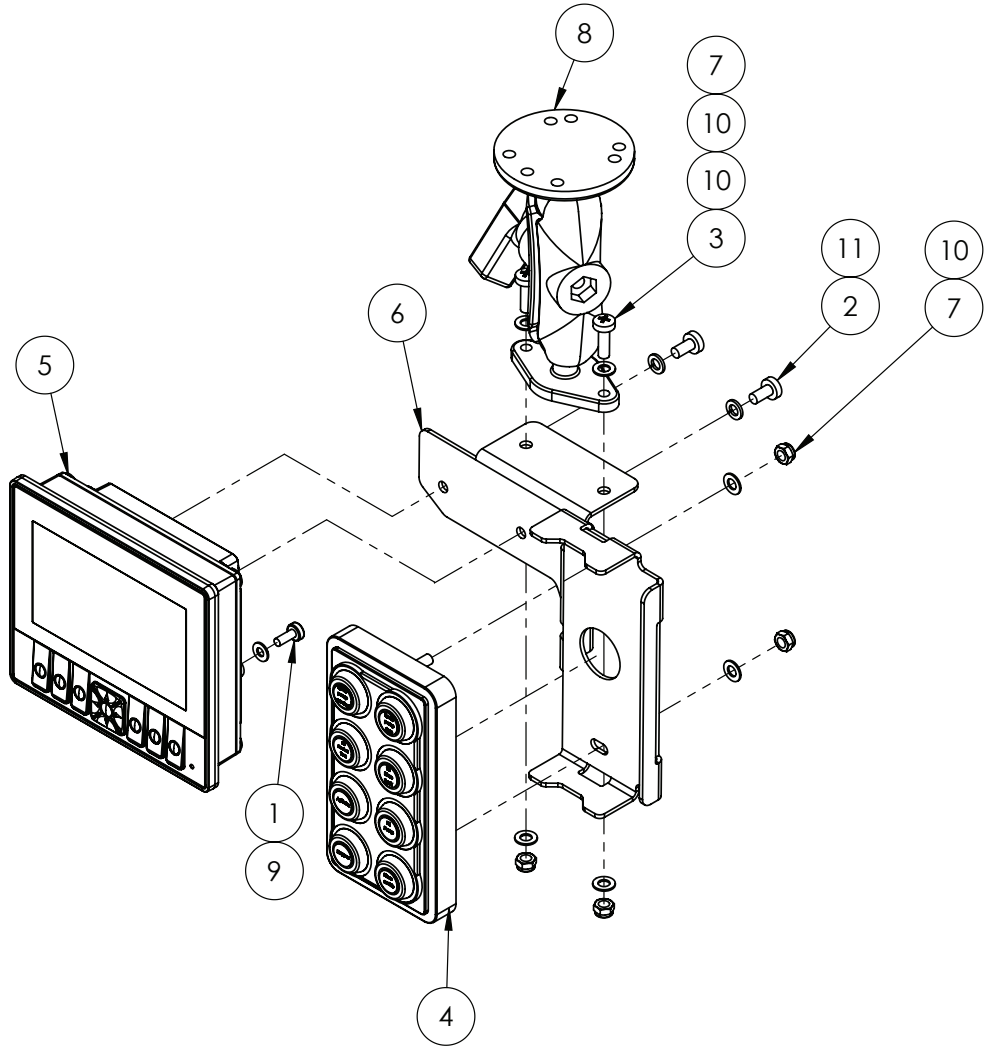

IF DESCRIPTION PREFIX IS ASSEMBLY DRAWING ONLY OR PRODUCTION DRAWING ONLY THE ITEM IS NOT FOR SALE			
ITEM	PART NUMBER	DESCRIPTION	QTY
1	GA5011360	BOLT PAN HEAD M4 X 10 SS	1
2	GA0500099	BOLT PAN HEAD M5	2
3	GA5003977	BOLT PAN HEAD M5 X 16 SS A2-70	2
4	GA4950010	CAN KEYPAD ASSEMBLY SUIT MY20 G6 POD	1
5	GA3001173	DISPLAY SCREEN, 4.3", NON TOUCH, G6 S3, MY24, IFM CR1140	1
6	GA4000028	MOUNTING PLATE SUIT CAN KEYPAD, SIDE POD	1
7	GA5003974	NUT M5 NYLOC ZP	4
8	GA5068930	RAM MOUNT, UNIVERSAL, ADJUSTABLE, B SIZE 1" BALL, 5" LENGTH, RAM-B-138U	1
9	GA5020510	WASHER M4 FLAT SS	1
10	GA5003983	WASHER M5 FLAT SS	6
11	GA5003629	WASHER M5 SPRING SS	2
GA6101969 GOLDACRES		ASSEMBLY DRAWING ONLY GHUB EXTERNAL DISPLAY, SUIT TOOL BOX	REV 00

Tool Box, Strut & Pinchweld

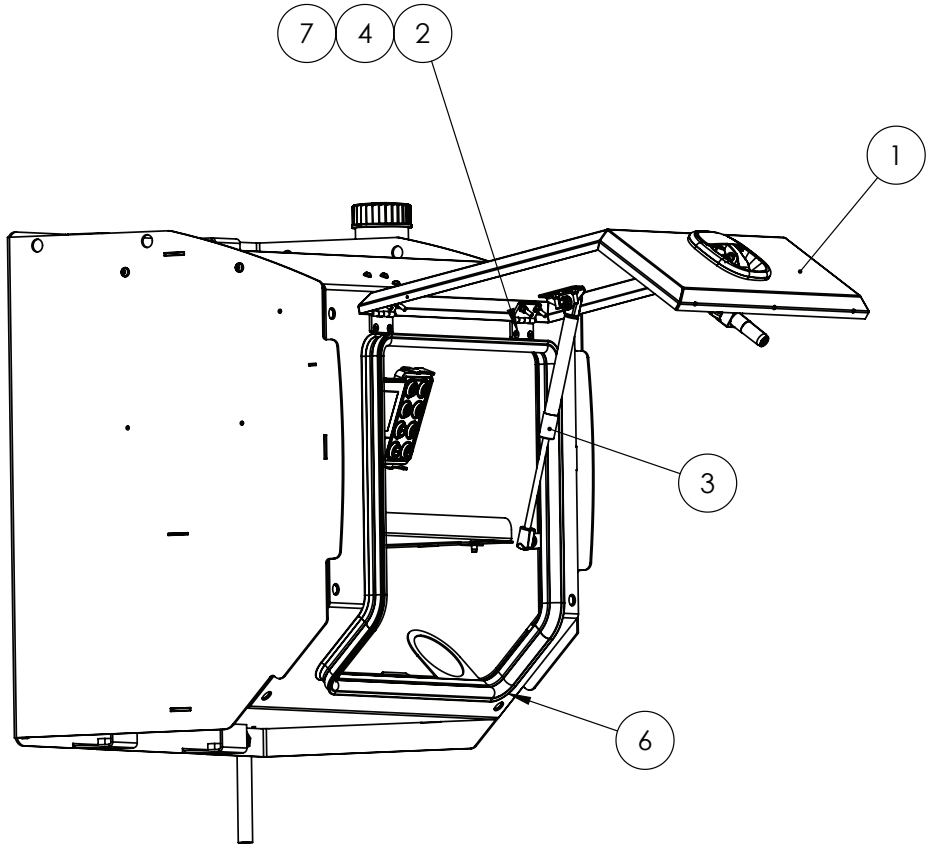

FIT 2x WASHERS ITEM 8
TO EACH END OF GAS STRUT

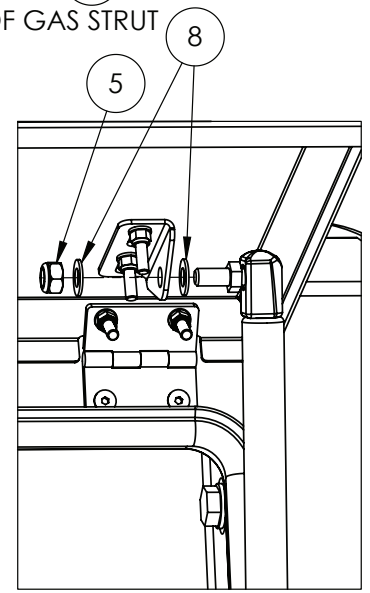

IF DESCRIPTION PREFIX IS ASSEMBLY DRAWING ONLY OR PRODUCTION DRAWING ONLY THE ITEM IS NOT FOR SALE			
ITEM	PART NUMBER	DESCRIPTION	QTY
1	GA4909542	ASSEMBLY DRAWING ONLY, G6-G8, S3, MY25, TOOLBOX, DOOR	1
2	GA5051230	CSCS M5 X 16 SS A2-70	4
3	GA5078511	GAS STRUT, 325mm LENGTH, 123mm STROKE, 250N	1
4	GA5003974	NUT M5 NYLOC ZP	4
5	GA5004917	NUT M8 NYLOC ZP	2
6	GA5072700	PINCHWELD, TOP BLISTER, 16.3mm X 30mm 25M ROLL, SOLD PER METER.	1.76
7	GA5003983	WASHER M5 FLAT SS	4
8	GA5003651	WASHER M8 FLAT SS	4
GA6101952-04 GOLDACRES		ASSEMBLY DRAWING ONLY, TOOL BOX, S3	REV 00.B

Toolbox, Door Assembly

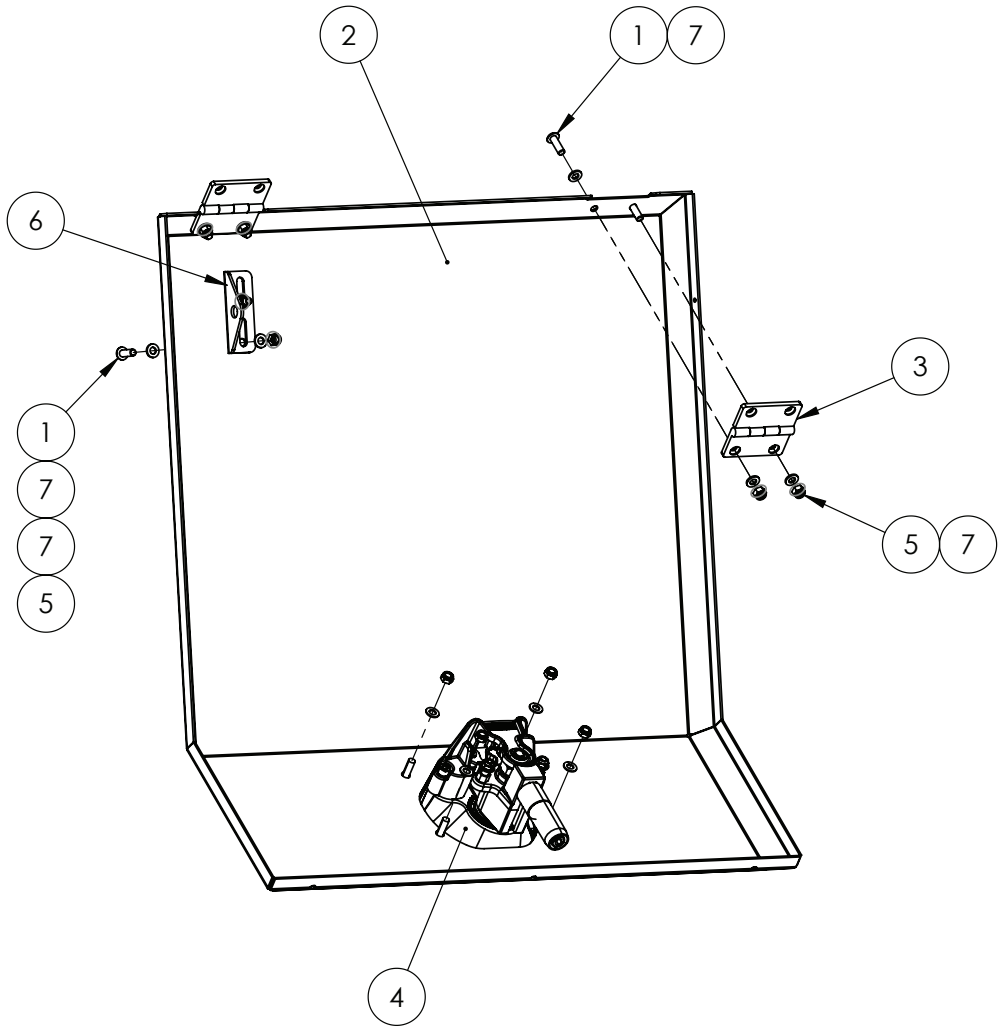

IF DESCRIPTION PREFIX IS ASSEMBLY DRAWING ONLY OR PRODUCTION DRAWING ONLY THE ITEM IS NOT FOR SALE			
ITEM	PART NUMBER	DESCRIPTION	QTY
1	GA5003977	BHCS M5 X 16 SS A2-70	6
2	GA4000444	G6-G8, S3, MY25, TOOLBOX, DOOR, PANEL	1
3	GA5020415	HINGE CABIN S/S 50 X 52 X 3	2
4	GA5026198	LOCK, COMPRESSION, WHALE TAIL, MIDNIGHT V3 MINI, BLACK, SK1 KEY	1
5	GA5003974	NUT M5 NYLOC ZP	6
6	GA4405885	PLATE, GAS STRUT MOUNT, TOOL BOX, G6 MY20	1
7	GA5003983	WASHER 5mm FLAT SS	12
GA4909542 GOLDACRES		ASSEMBLY DRAWING ONLY, G6-G8, S3, MY25, TOOLBOX, DOOR	REV 00.A

Bonnet Mounting

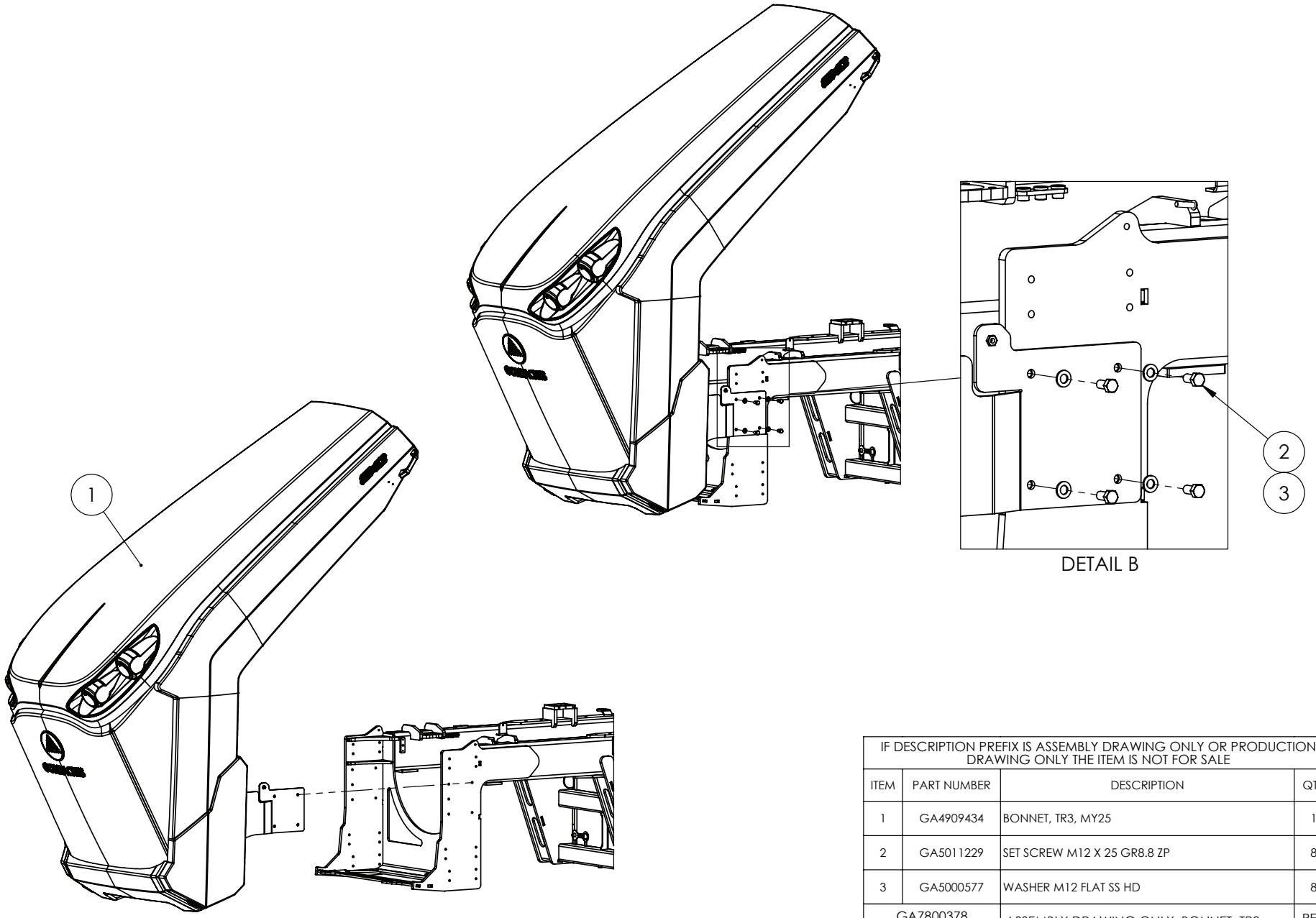

IF DESCRIPTION PREFIX IS ASSEMBLY DRAWING ONLY OR PRODUCTION DRAWING ONLY THE ITEM IS NOT FOR SALE			
ITEM	PART NUMBER	DESCRIPTION	QTY
1	GA4909434	BONNET, TR3, MY25	1
2	GA5011229	SET SCREW M12 X 25 GR8.8 ZP	8
3	GA5000577	WASHER M12 FLAT SS HD	8
GA7800378 GOLDACRES		ASSEMBLY DRAWING ONLY, BONNET, TR3, MY25, CHASSIS FASTENERS	REV 02.B

Cabin Mounting

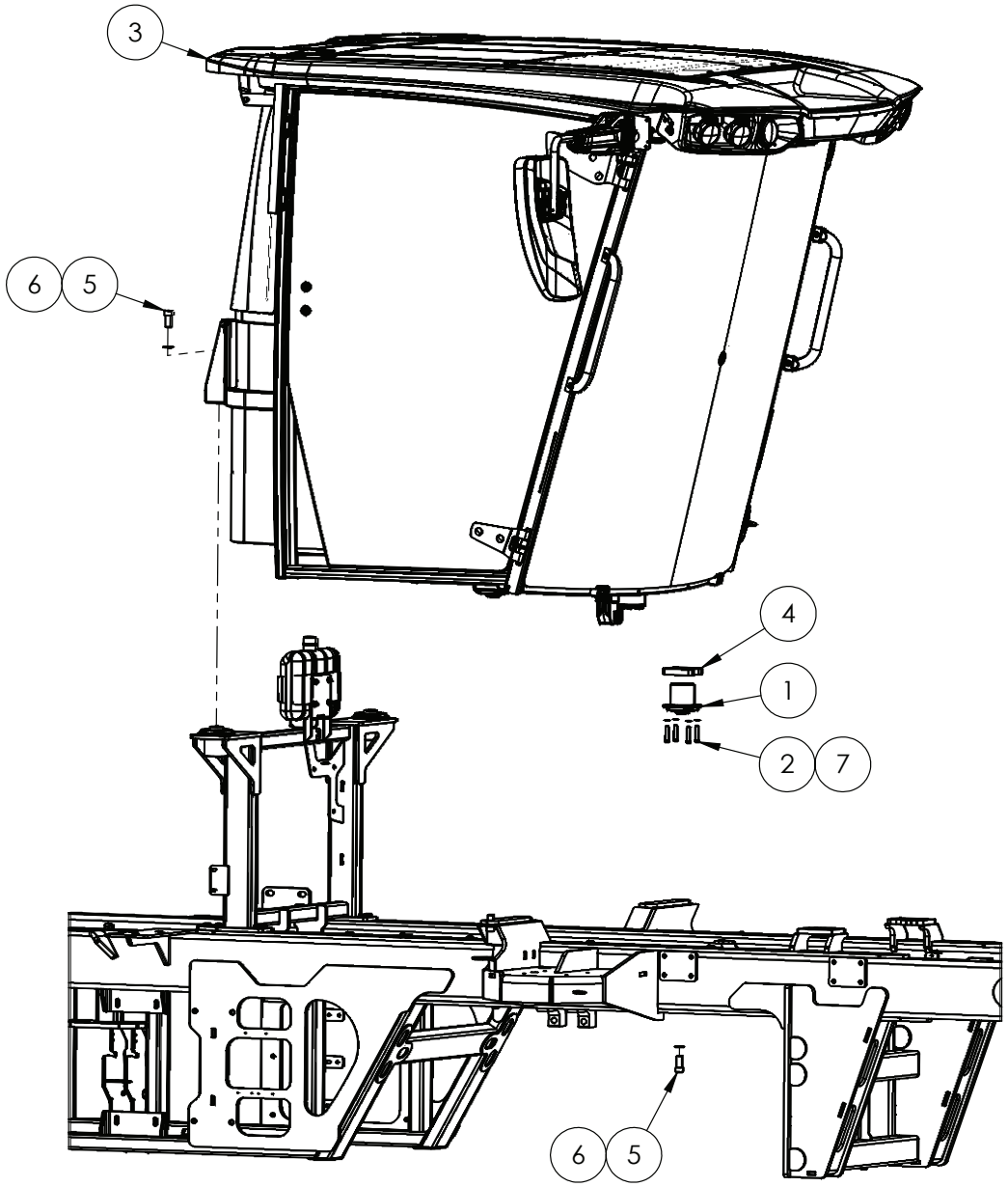

IF DESCRIPTION PREFIX IS ASSEMBLY DRAWING ONLY OR PRODUCTION DRAWING ONLY THE ITEM IS NOT FOR SALE			
ITEM	PART NUMBER	DESCRIPTION	QTY
1	GA5026211	ANTI VIBRATION MOUNT , HYDROCONE, 32 SUPPORT, 50 SHORE, 177105	2
2	GA5004727	BOLT M8 X 50 GR8.8 ZP	8
3	GA6101860	CABIN ASSEMBLY, CLAAS X11, LARGE FRAME SP S3, MY25 CONFIGURABLE	1
4	GA4000450	PLATE, SPACER, HYDRAULIC CAB MOUNT, LARGE FRAME SP S3	2
5	GA5000925	SHCS M16 X 40 GR12.9 ZP	4
6	GA5001043	WASHER M16 FLAT SS HD	4
7	GA5003643	WASHER M8 FLAT SS HD	8
GA7800301 GOLDACRES		ASSEMBLY DRAWING ONLY, CABIN INSTALLATION SERIES 3	REV 00.B

Main Tank Mounting

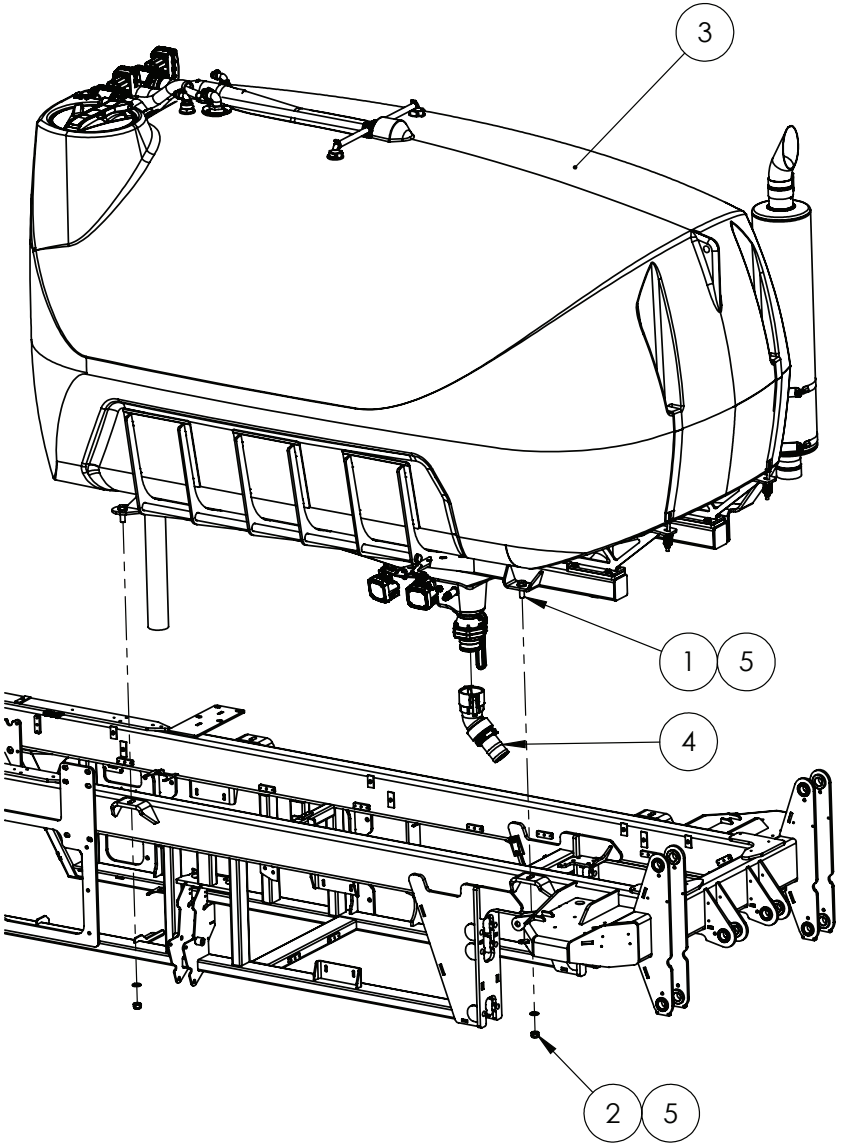

IF DESCRIPTION PREFIX IS ASSEMBLY DRAWING ONLY OR PRODUCTION DRAWING ONLY THE ITEM IS NOT FOR SALE			
ITEM	PART NUMBER	DESCRIPTION	QTY
1	GA5011333	BOLT M20 X 60 GR8.8 ZP	4
2	GA5048125	NUT M20 NYLOC ZP	4
3	GA6101885	TANK AND CRADLE ASSEMBLY, G8 CROP CRUISER, SERIES 3	1
4	GA4913460	TANK DRAIN ASSEMBLY, 3", 45°, CROP CRUISER	1
5	GA5001741	WASHER M20 FLAT SS HD	8
GA7800263 GOLDACRES		ASSEMBLY DRAWING ONLY, G8 TANK INSTALLATION, S3	REV 00

Tank Drain Assembly

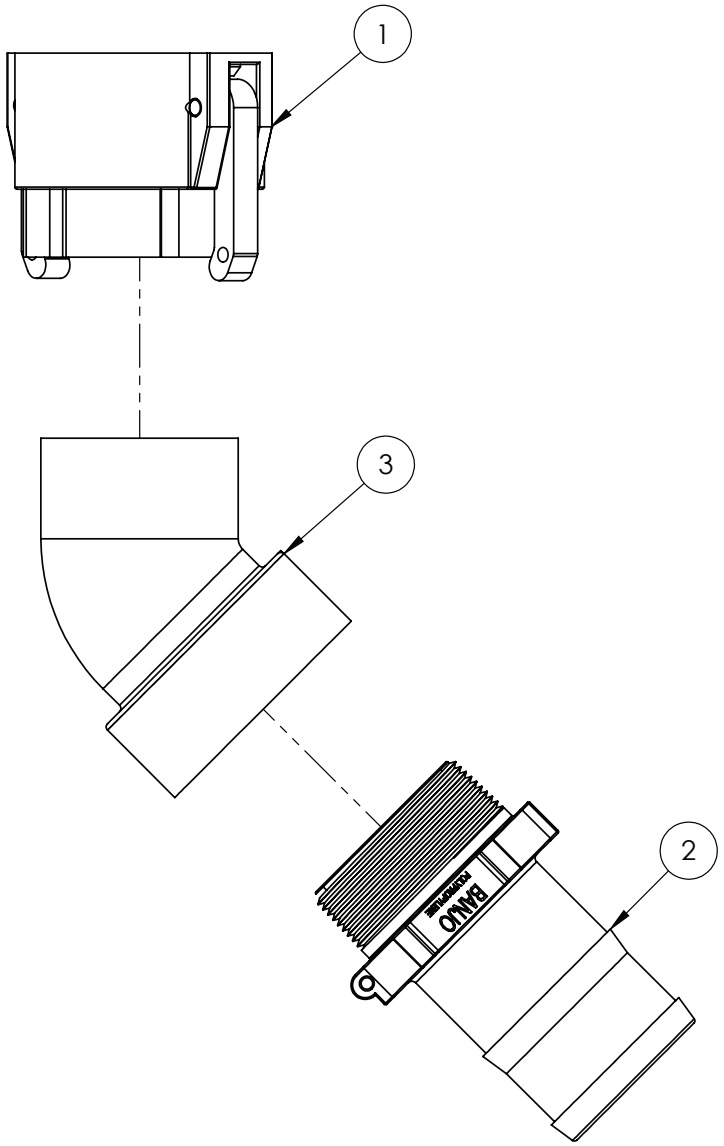

IF DESCRIPTION PREFIX IS ASSEMBLY DRAWING ONLY OR PRODUCTION DRAWING ONLY THE ITEM IS NOT FOR SALE			
ITEM	PART NUMBER	DESCRIPTION	QTY
1	GA5076720	CAM LEVER, 3 FEMALE COUPLING X 3 FEMALE THREAD, BANJO - NSPT THREAD	1
2	GA5077741	HOSE BARB, STRAIGHT, 3 MALE THREAD X 3 HOSE, BANJO	1
3	GA5078143	STREET ELBOW, 45 DEGREE, 3 MALE X 3 FEMALE, BANJO	1
GA4913460 GOLDACRES		TANK DRAIN ASSEMBLY, 3", 45°, CROP CRUISER	REV

04 - Pumps

Pump, ACE 650F, Hydraulic Drive, Parts Breakdown

REPLACEMENT PARTS			
ITEM	PART NUMBER	DESCRIPTION	QTY
-	GA5026376	REPAIR KIT, PUMP, ACE, SUIT, 650 WETSEAL MODELS, INCLUDES ITEMS 3, 5, 10 & LUBRICANT	-
-	GA5026377	SENSOR, RPM, SUIT, ACE PUMP, 650F SERIES	-
-	GA5026378	SEAL KIT, HYDRAULIC MOTOR WITH CASE DRAIN, ACE	-

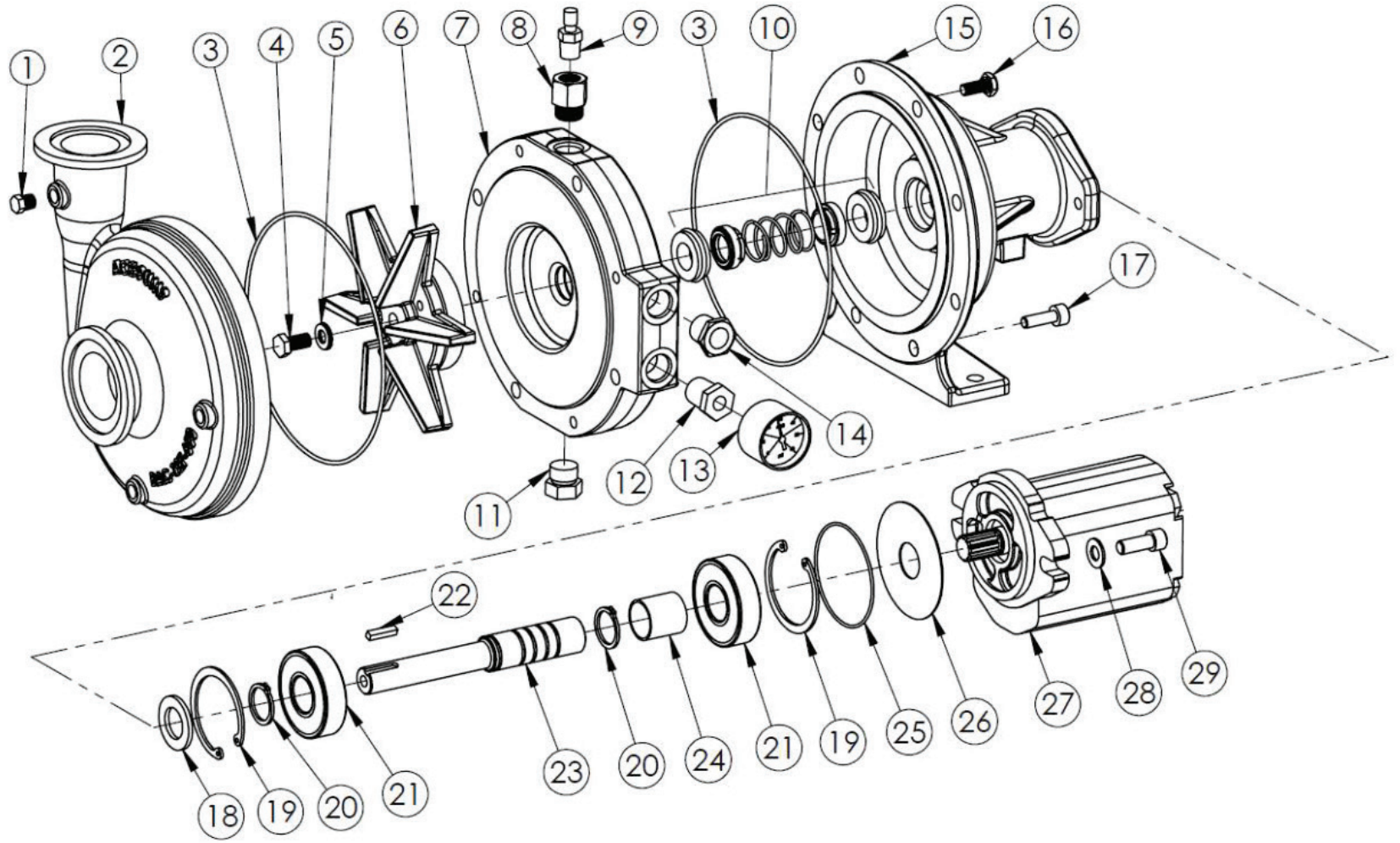

^PARTS LIST ON FOLLOWING PAGE

GA2000277 GOLDACRES	PUMP, CENTRIFUGAL, 644 LPM, OASIS RUN DRY SEAL, ACE	REV

Pump, ACE 650F, Hydraulic Drive, Parts List

ACE CENTRIFUGAL PUMP 650F OASIS SERIES					
1	GA5026391	PLUG, BRASS, 1/8", NPT, HEX HEAD	21	GA5026407	BEARING, PUMP, SHAFT, ACE 650 MODELS
2	GA5026392	VOLUTE, PUMP, ACE, NPT&220 FLANGE X NPTX200 FLANGE, SUIT, GA2000277	22	GA5026420	KEY, SHAFT, PUMP, ACE 650F
3	GA5026376	REPAIR KIT, PUMP, ACE, SUIT, 650 WETSEAL MODELS	23	GA5026421	SHAFT, PUMP, 11T FEMALE SPLINE, SS, ACE 650
4	GA5026393	SHCS, 3/8" UNC X 3/4", SS	24	GA5026422	SPACER, SHAFT, PUMP, ACE 650F
5	GA5026376	REPAIR KIT, PUMP, ACE, SUIT, 650 WETSEAL MODELS	25	GA5026424	O-RING, FLANGE, M SERIES, ACE 650
6	GA5026394	IMPELLER, ACE PUMP, CAST IRON, E-COATED, SUIT, GA2000277	26	GA5026425	PAD, ABSORBENT, M SERIES, ACE 650
7	GA5026397	PLATE, SEAL, CAST IRON, E-COATED, SUIT, ACE 650F, GA2000277	27	GA5026375	MOTOR, HYDRAULIC, WITH CASE DRAIN, SUIT, ACE 650F PUMP, 11.5CC
8	GA5026398	BUSH, #8 SAE X 1/4" FNTP, HEX, WITH O-RING	28	GA5002563	WASHER 3/8" X 7/8" FLAT SS
9	GA5026399	AIR VALVE, 1/4" NPT, ACE PUMP	29	GA0500200	SHCS 3/8 UNC X 1" SS
10	GA5026376	REPAIR KIT, PUMP, ACE, SUIT, 650 WETSEAL MODELS	-	GA5026376	REPAIR KIT, PUMP, ACE, SUIT, 650 WETSEAL MODELS
11	GA5026400	PLUG, HEX HEAD, #8 SAE, WITH O-RING	-	GA5026377	SENSOR, RPM, SUIT, ACE PUMP, 650F SERIES
12	GA5026401	BUSH, #8 SAE X 1/8" FNPT	-	GA5026378	SEAL KIT, HYDRAULIC MOTOR WITH CASE DRAIN, ACE
13	GA5026379	GAUGE, SUIT, ACE PUMP, 650 SERIES			
14	GA5026402	GAUGE, SIGHT, #8 SAE, WITH FLOAT, SUIT, GA2000277			
15	GA5026403	MOUNTING FRAME, PUMP, ACE 650F, CAST IRON, SUIT, GA2000277			
16	GA5026408	BOLT 3/8" UNC X 2" GR8 ZP			
17	GA0500200	SHCS 3/8 UNC X 1" SS			
18	GA5026404	SLINGER, 1.25" OD X .75" ID, EPDM, SUIT, GA2000277			
19	GA5026405	SNAP RING, INTERNAL, MOUNTING FRAME, ACE 650F, SUIT, GA2000277			
20	GA5026406	SNAP RING, EXTERNAL, SHAFT, ACE 650F, SUIT, GA2000277			

GA2000277 GOLDACRES	PUMP, CENTRIFUGAL, 644 LPM, OASIS RUN DRY SEAL, ACE	REV

Pump, Banjo M350, Hydraulic Drive, Parts Breakdown

REPLACEMENT PARTS			
ITEM	PART NUMBER	DESCRIPTION	QTY
-	GA5026539	KIT, REBUILD, SUIT, PUMP, BANJO M350, WET SEAL GA2000575	-
-	GA5026540	KIT, SERVICE, SUIT, HYDRAULIC MOTOR, HY11131A	-

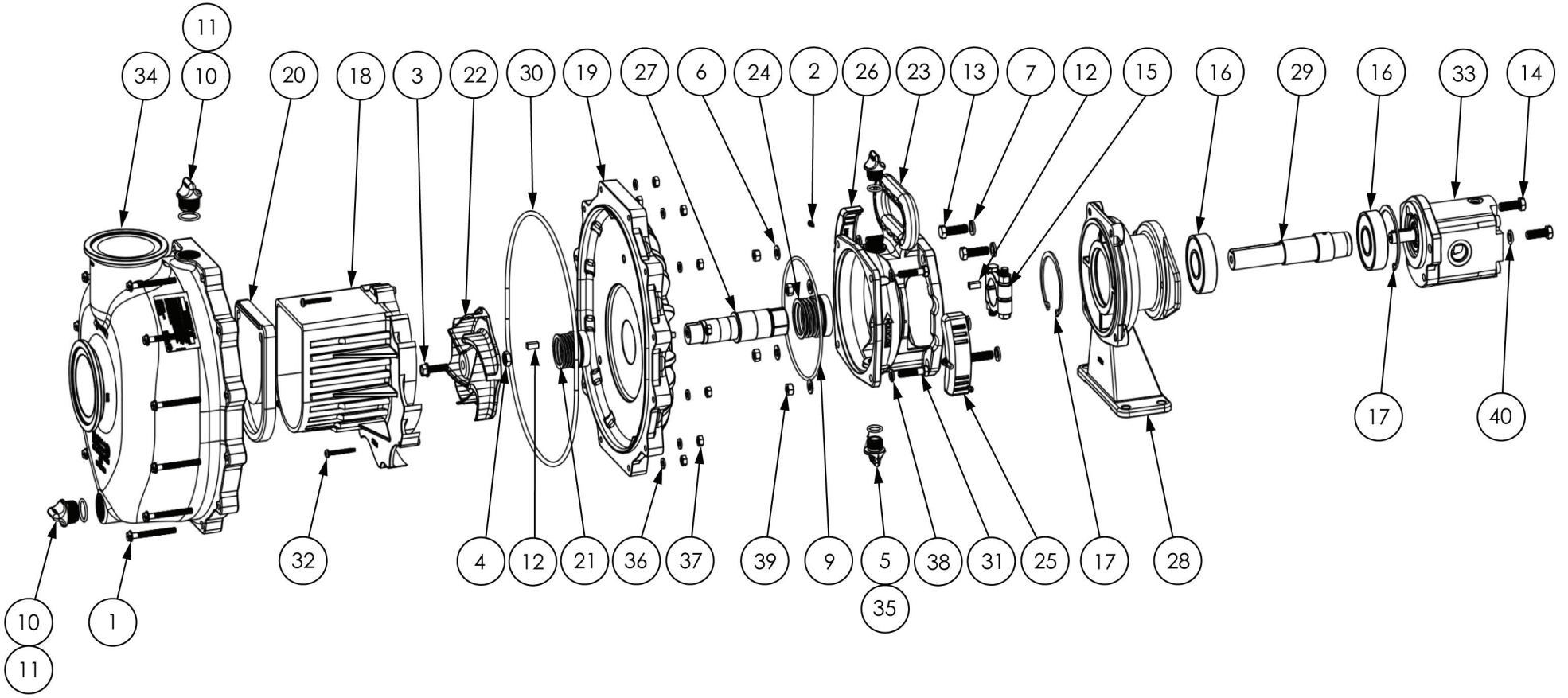

GA2000575	PUMP, FILL, 3" FLANGE, HYDRAULIC DRIVE, BANJO, M350	REV 00

Pump, Banjo M350, Hydraulic Drive, Parts List

PUMP, FILL, 3" FLANGE, HYDRAULIC DRIVE, BANJO, M350					
1	GA0500206	BOLT, HEX WASHER HEAD, IND, 1/4"-20 X 21/2" SL, ZP	21	GA5026514	SEAL, MECHANICAL, 1.125", BULK, EPDM
2	GA0500207	SCREW, #6 X 1/2" PPH SMS	22	GA5026515	IMPELLER, 5-VANE, PUMP, BANJO M350
3	GA5076419	5/16-24 X 1.12 HFS, 316SS, 12765A	23	GA5026516	RESERVOIR, WET SEAL, 3" PUMP, BANJO M350
4	GA5076423	7/16-14 HEX NUT 5/8 316SS, 12775A	24	GA5026517	SEAL, MECHANICAL, 1.375", BULK, EPDM
5	GA5026502	PLUG, DRAIN, 1/2", BANJO	25	GA5026518	GUARD, SHAFT, LH, PUMP, BANJO M350
6	GA5003631	WASHER 5/16" X 3/4" FLAT SS	26	GA5026519	GUARD, SHAFT, RH, PUMP, BANJO M350
7	GA5002565	WASHER 3/8" X 1" FLAT SS	27	GA5026520	ADAPTOR, SHAFT, PUMP, BANJO, M350
8	N/A		28	GA5026523	PEDESTAL, HOUSING, PUMP, BANJO M350
9	GA5026504	O-RING, 152.7OD X 145.64ID, VITON	29	GA5026526	SHAFT, 9/16", PUMP, BANJO M350
10	GA5026505	PLUG, DRAIN, 3/4", MALE, MOULDED, BANJO	30	GA5026527	O-RING, 302.13OD X 5.33MM, EPDM
11	GA5026506	O-RING, 28.71OD X 2.62, EPDM	31	GA0500210	BOLT, HEX HEAD, 5/16" X 1-3/8", GR8.8 ZP
12	GA5026507	KEYWAY, 1/4" SQ. X 5/8", 18-8 SS	32	GA0500211	SCREW, #10 X 1-1/2", THREAD FORMING, 18-8, SS
13	GA0500208	BOLT, HEX HEAD, 3/8" X 1 1/4", GR8.8 ZP	33	GA5026528	MOTOR, HYDRAULIC, AZMF-12-011UXR12KX, SUIT, PUMP, BANJO M350
14	GA0500209	BOLT, HEX HEAD, 3/8" X 1 1/8", GR8.8 ZP	34	GA5026531	BODY, MANIFOLD, PUMP, BANJO M350
15	GA5026508	CLAMP, SHAFT, PUMP, BANJO M350	35	GA5026532	O-RING, 20.78OD X 2.62mm, EPDM
16	GA5026509	BEARING, PEDESTAL, PUMP, BANJO M350	36	GA0500212	WASHER, LOCKING, 1/4", ZP
17	GA5026510	CIRCLIP, RETAINER, BEARING, BANJO PUMP, M350	37	GA0500213	NUT, HEX, 1/4", UNC, SS
18	GA5026511	VOLUTE, 3", PUMP, BANJO M350	38	GA0500215	WASHER, LOCKING, 5/16", ZP
19	GA5026512	COVER, REAR BRACKET, PUMP, 3", BANJO M350	39	GA0500216	NUT, HEX, 5/16", UNC, SS
20	GA5026513	SEAL, WET, 3", PUMP, BANJO, M350	40	GA0500217	WASHER, LOCKING, 3/4", SS

GA2000575 GOLDACRES	PUMP, FILL, 3" FLANGE, HYDRAULIC DRIVE, BANJO, M350	REV 00

Graco Chemical Pump

REPLACEMENT PARTS			
ITEM	PART NUMBER	DESCRIPTION	QTY
A	GA2000330	SEAL KIT, AIR VALVE, GRACO CHEMICAL TRANSFER PUMP, GA2000152	-
B	GA2000363	SEAL KIT, DIAPHRAGMS AND O-RINGS, GRACO CHEMICAL TRANSFER PUMP, GA2000152	-

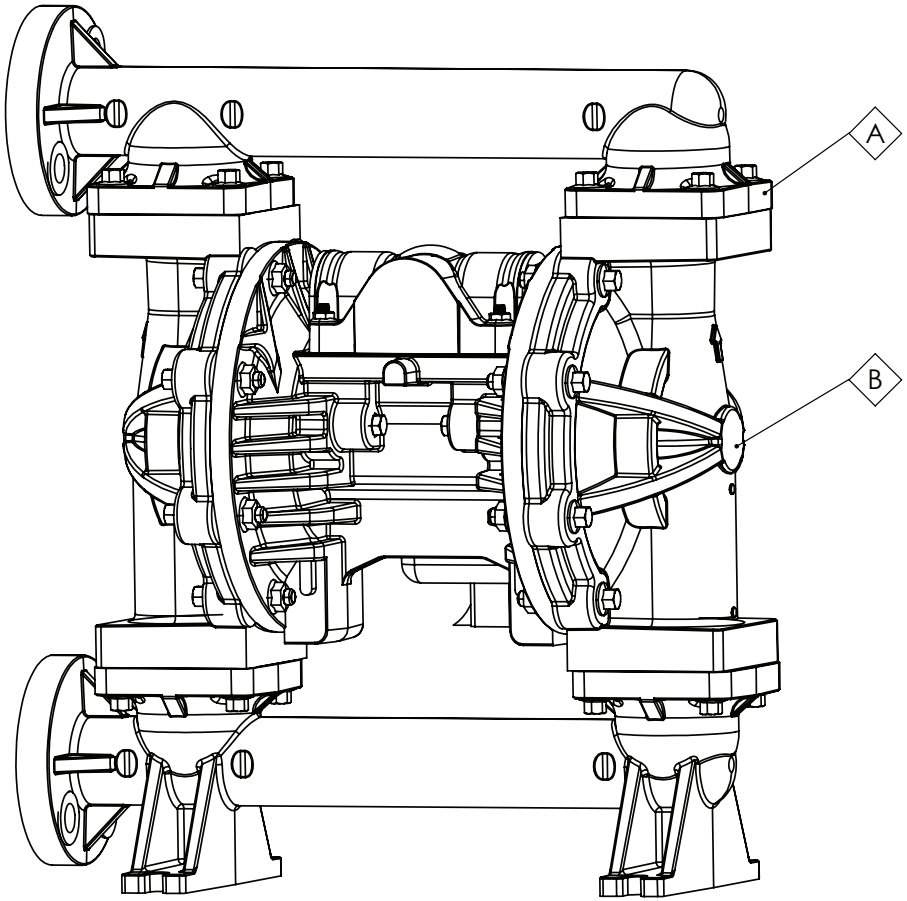

GA2000152 GOLDACRES	PUMP, CHEMICAL TRANSFER, DIAPHRAGM, SIDE PORTED, GRACO HUSKY 1050P-	REV 01

05 - Tanks

Main Tank, 8000L

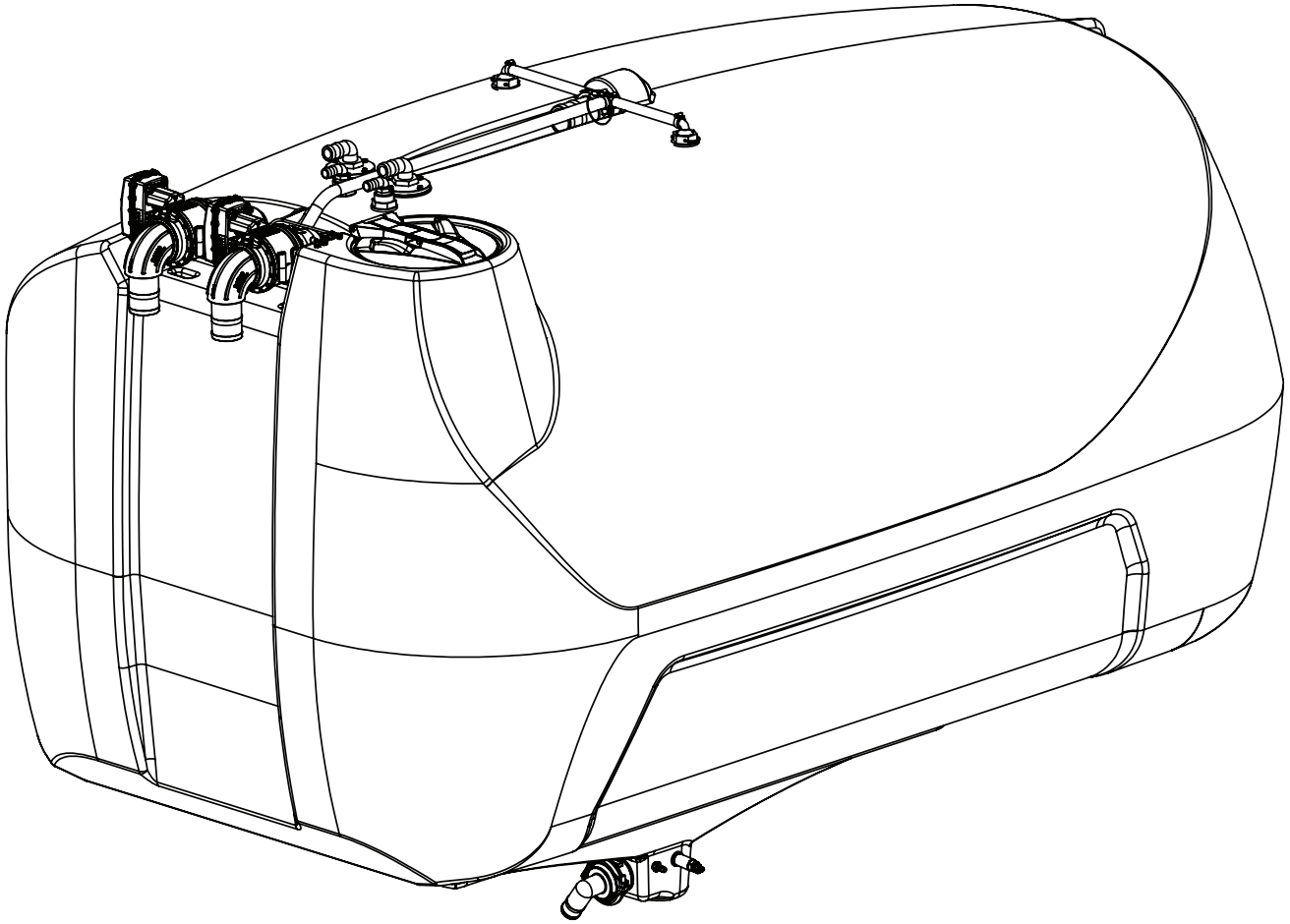

BUILD OPTIONS:
50057 - 3" SEPERATE FRONT FILL
80110 - 1500 FRONT MOUNT TANK ADDITIONAL CAPACITY

GA6101920 GOLDACRES	PRODUCTION DRAWING ONLY,TANK ASSEMBLY, CONFIGURABLE, G8 SERIES 3	REV 01

Main Tank, Assembly

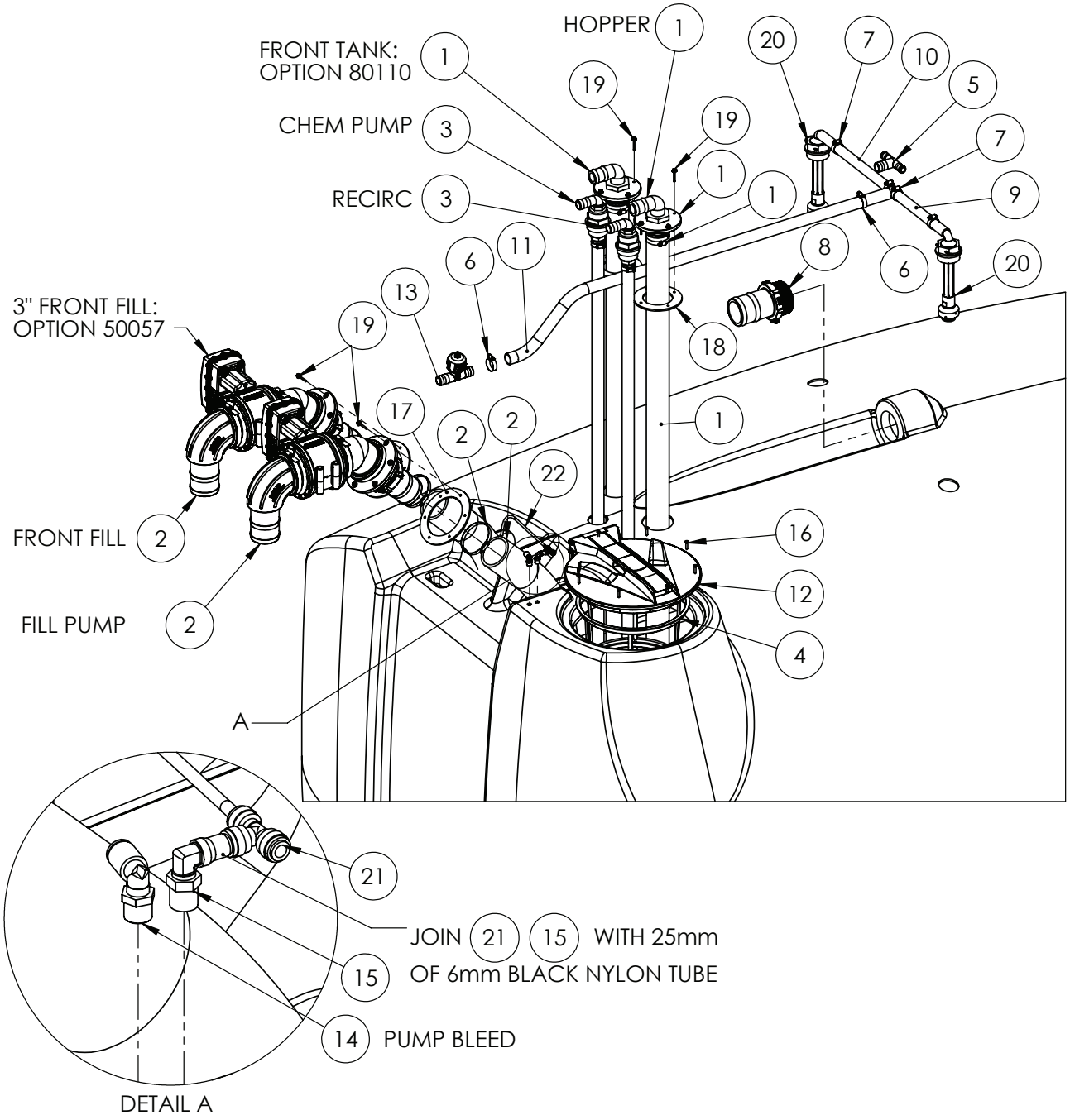

IF DESCRIPTION PREFIX IS ASSEMBLY DRAWING ONLY OR PRODUCTION DRAWING ONLY THE ITEM IS NOT FOR SALE			
ITEM	PART NUMBER	DESCRIPTION	QTY
1	GA4909705	ASSEMBLY DRAWING ONLY, TANK INLET, HOPPER, HOSE FITMENT, SERIES 3	2
2	GA4909706	ASSEMBLY DRAWING ONLY, 3" FILL SHUT OFF, HOSE FITMENT, SERIES 3	2
3	GA4909035	ASSEMBLY DRAWING ONLY, TANK, INLET, 1" HOSE	2
4	GA5076714	FILTER, BASKET TYPE, DIAMETER 305 X 245 DEEP, SUIT MAIN SPRAY TANK	1
5	GA2000580	HOSE BARB, TEE, 3/4" BARB X 3/4" BARB X 1" BARB, BANJO, HBT075-100	1
6	GA5001681	HOSE CLAMP, 1" SS (20-32/12W)	2
7	GA5000999	HOSE CLAMP, 3/4" SS (16-27/12W)	4
8	GA5077741	HOSE BARB, STRAIGHT, 3 MALE THREAD X 3 HOSE, BANJO	1
9	GA2000216	HOSE, PRESSURE, 20mm, BLACK 250PSI, HOS20P	0.25
10	GA2000216	HOSE, PRESSURE, 20mm, BLACK 250PSI, HOS20P	0.35
11	GA2000219	HOSE, PRESSURE, 25mm, BLACK HOS25P	1.1
12	GA5078336	LID, HINGED, BLACK PLASTIC, 355mm, 3560402	1
13	GA4909431	PLUMBING TEE ASSEMBLY, SIGHT TUBE, SERIES 3	1
14	GA5052690	PNEUMATIC FITTING, ELBOW, 90 DEGREE, 1/4 BSP MALE X 8mm PUSH TYPE, METAL	1
15	GA5016233	PNEUMATIC FITTING, ELBOW, 90 DEGREE, 1/4 BSP MALE X 6mm PUSH IN TYPE, METAL	1
16	GA5014819	SCREW SELF TAPPER 10G X 1 SS	8
17	GA5025910	SEAL, 3" TANK FILL	2
18	GA5025912	SEAL, TANK HOPPER INLET	2
19	GA0500139	TANK AGITATOR SCREW, SELF TAPPING, 14G X 30mm, SS 304	20
20	GA4909459	TANK RINSE NOZZLE ASSEMBLY, SERIES 3	2
21	GA5016245	TEE, EQUAL, 6mm PUSH IN TYPE, BLACK PLASTIC	1
22	GA5004383	TUBE, NYLON, 6mm, BLACK	0.5
GA6101920 GOLDACRES		PRODUCTION DRAWING ONLY,TANK ASSEMBLY, CONFIGURABLE, G8 SERIES 3	REV 01

Tank Inlet, Hopper, 1 1/2”

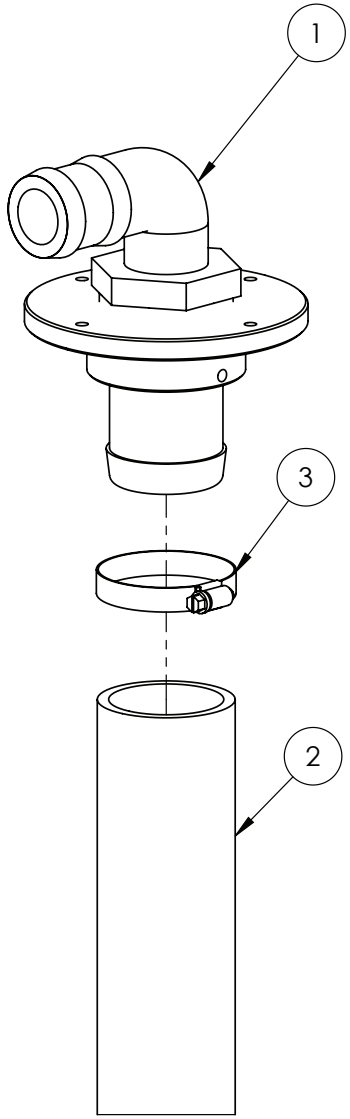

IF DESCRIPTION PREFIX IS ASSEMBLY DRAWING ONLY OR PRODUCTION DRAWING ONLY THE ITEM IS NOT FOR SALE			
ITEM	PART NUMBER	DESCRIPTION	QTY
1	GA4909461	TANK INLET, HOPPER, 1 1/2" BARB, S3	1
2	GA2000228	HOSE, PVC, 50mm, BLACK, HOS50PVC, SOLD PER METER	1.6
3	GA5003325	HOSE CLAMP 2" SS (40-60/12W)	1
GA4909705 GOLDACRES		TITLEASSEMBLY DRAWING ONLY, TANK INLET, HOPPER, HOSE FITMENT, SERIES 3	REV 00

Tank Inlet, Hopper, 1 1/2”, Assembly

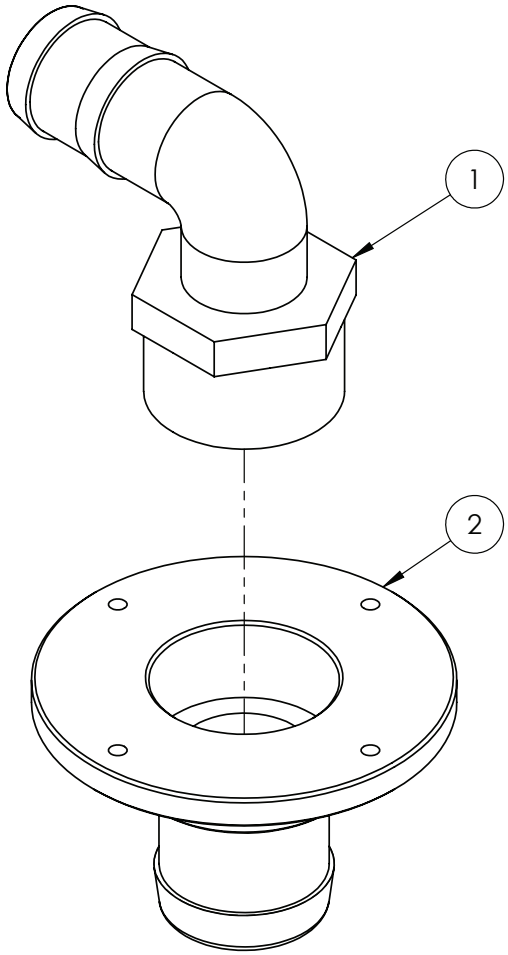

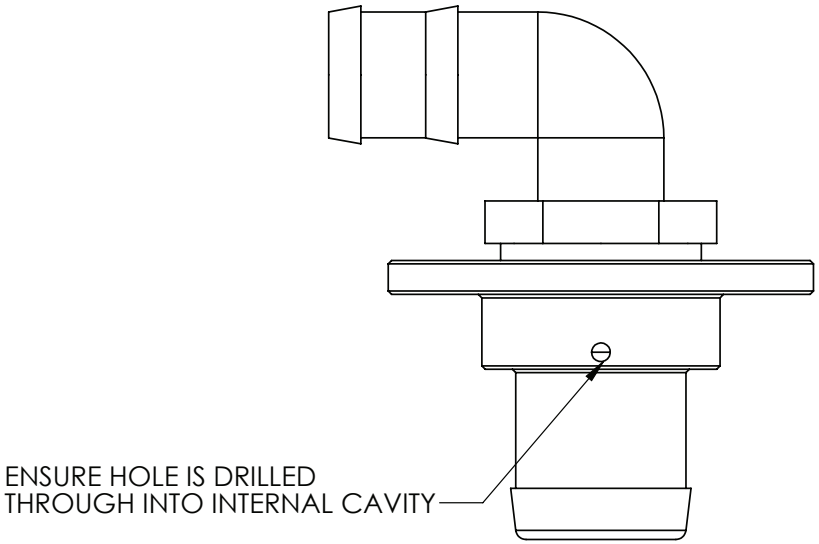

IF DESCRIPTION PREFIX IS ASSEMBLY DRAWING ONLY OR PRODUCTION DRAWING ONLY THE ITEM IS NOT FOR SALE			
ITEM	PART NUMBER	DESCRIPTION	QTY
1	GA5077738	HOSE BARB, ELBOW, 90 DEGREE, 2" MALE THREAD X 1 1/2" HOSE	1
2	GA4553236	TANK INLET FLANGE, 2" NPT X 2" BARB	1
GA4909461 GOLDACRES		TANK INLET, HOPPER, 1 1/2" BARB, S3	REV 00

Tank Inlet, 1”

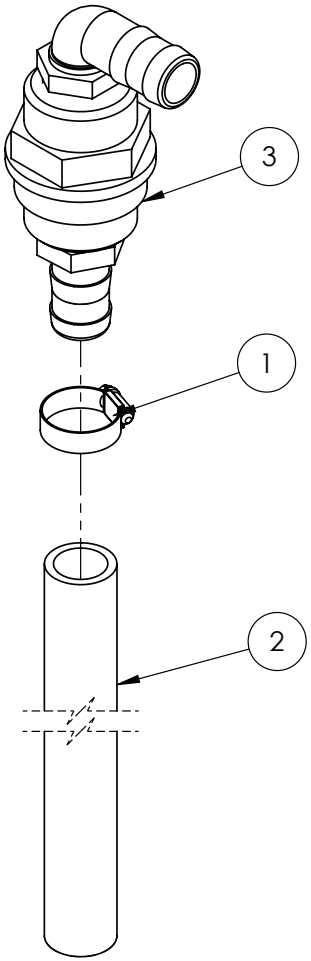

IF DESCRIPTION PREFIX IS ASSEMBLY DRAWING ONLY OR PRODUCTION DRAWING ONLY THE ITEM IS NOT FOR SALE			
ITEM	PART NUMBER	DESCRIPTION	QTY
1	GA5001681	HOSE CLAMP, 1" SS (20-32/12W)	1
2	GA2000220	HOSE, SUCTION, PVC, 25mm, BLACK, HOS25PVC, SOLD PER METER	1.3
3	GA4922140	TANK, INLET, 1", CHEMICAL FILL POINT	1
GA4909035 GOLDACRES		ASSEMBLY DRAWING ONLY, TANK, INLET, 1" HOSE	REV 02

Tank Inlet Assembly, 1”

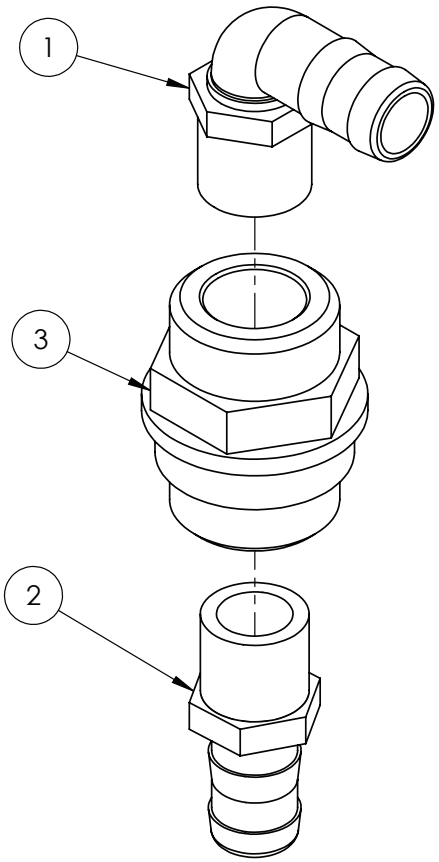

IF DESCRIPTION PREFIX IS ASSEMBLY DRAWING ONLY OR PRODUCTION DRAWING ONLY THE ITEM IS NOT FOR SALE			
ITEM	PART NUMBER	DESCRIPTION	QTY
1	GA5077723	HOSE BARB, ELBOW, 90 DEGREE, 1" MALE X 1" HOSE, BANJO	1
2	GA5077718	HOSE BARB, STRAIGHT, 1 MALE THREAD X 1 HOSE, BANJO	1
3	GA4572395	MAIN TANK LINE RETURN FITTING 1"	1
GA4922140 GOLDACRES		TANK, INLET, 1", CHEMICAL FILL POINT	REV 01

Tank Rinse Nozzle Assembly

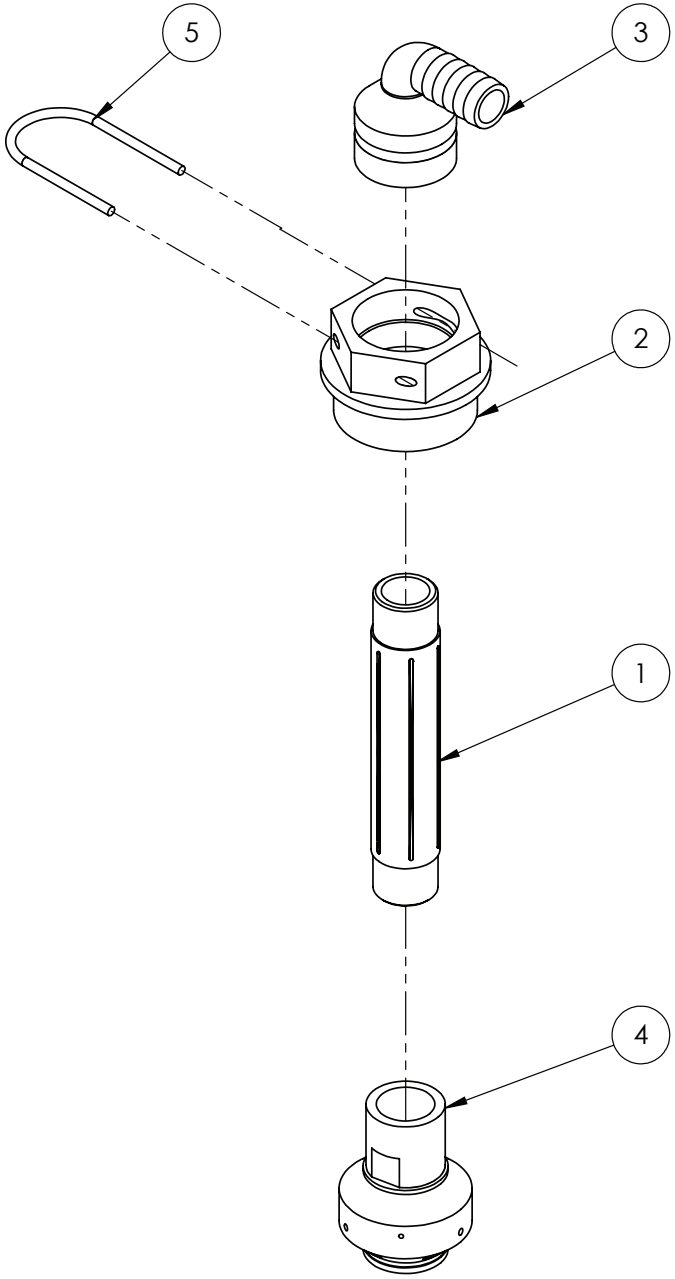

IF DESCRIPTION PREFIX IS ASSEMBLY DRAWING ONLY OR PRODUCTION DRAWING ONLY THE ITEM IS NOT FOR SALE			
ITEM	PART NUMBER	DESCRIPTION	QTY
1	GA5077912	3/4" X 6" POLY NIPPLE	1
2	GA4553235	BULKHEAD, TANK RINSE NOZZLE MOUNT	1
3	GA5065610	HOSE BARB, ELBOW, 90 DEGREE, AS40 X 20mm HOSE, ALTEK	1
4	GA5077336	NOZZLE, TANK RINSING, 3/4 BSPT FEMALE INLET, TEEJET	1
5	GA5065690	RETAINING PIN, SAFETY CLIP, SUIT AS40 PLUMBING FITTINGS, ALTEK	1
GA4909459 GOLDACRES		TANK, FLUSHING NOZZLE (ELBOW) CAM ADAPTOR TANK RINSE NOZZLE ASSEMBLY, SERIES 3	REV 00

Main Fill, Shut Off, 3”

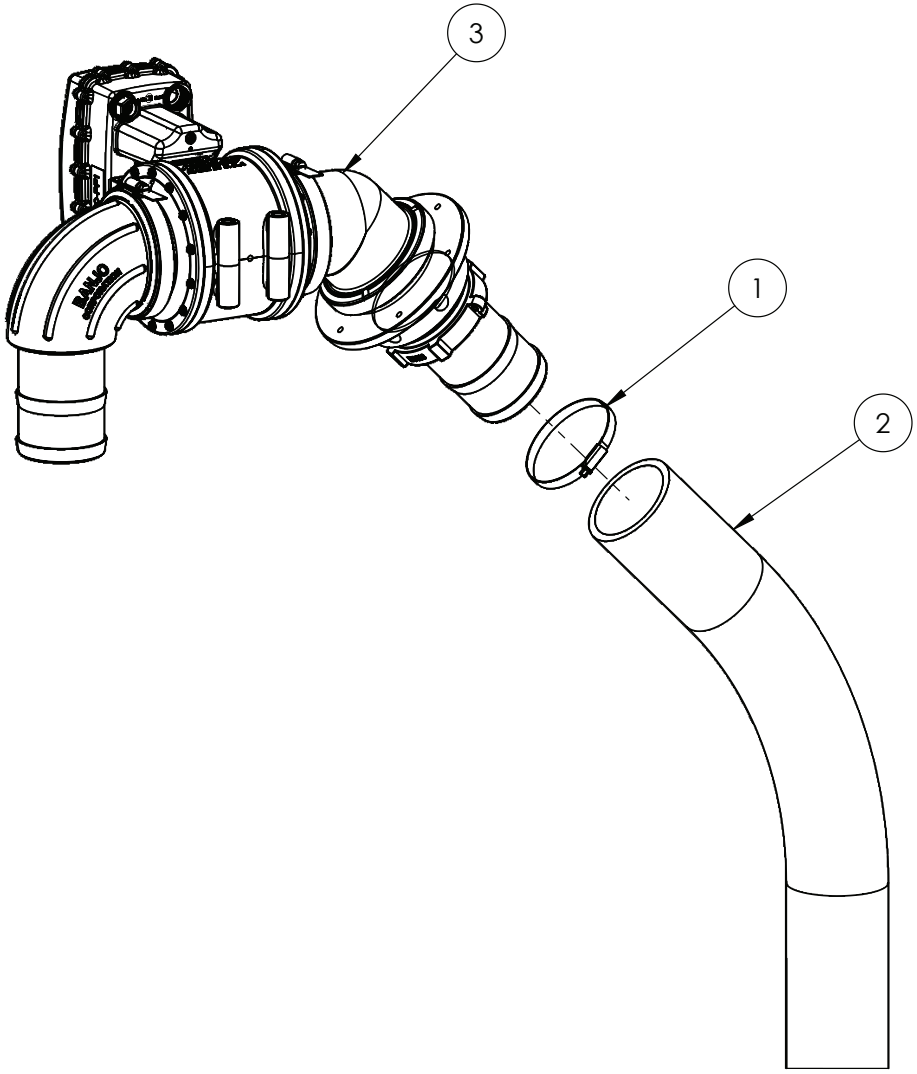

IF DESCRIPTION PREFIX IS ASSEMBLY DRAWING ONLY OR PRODUCTION DRAWING ONLY THE ITEM IS NOT FOR SALE			
ITEM	PART NUMBER	DESCRIPTION	QTY
1	GA5003835	HOSE CLAMP 3" SS (70-90/12W3)	1
2	GA2000231	HOSE, SUCTION, PVC, 75mm, BLACK, HOS75PVC, SOLD PER METER	1.55
3	GA4909443	VALVE ASSEMBLY, 3" FILL SHUT OFF, SERIES 3	1
GA4909706 GOLDACRES		ASSEMBLY DRAWING ONLY, 3" FILL SHUT OFF, HOSE FITMENT, SERIES 3	REV 00

Valve Assembly, 3” Main Fill, Shut Off

REPLACEMENT PARTS			
ITEM	PART NUMBER	DESCRIPTION	QTY
A	GA2000161	BALL VALVE, ACTUATOR ONLY, SUIT GA2000144, KZ VALVE	-
B	GA2000157	BALL VALVE, VALVE ONLY, SUIT GA2000144, KZ VALVE	-

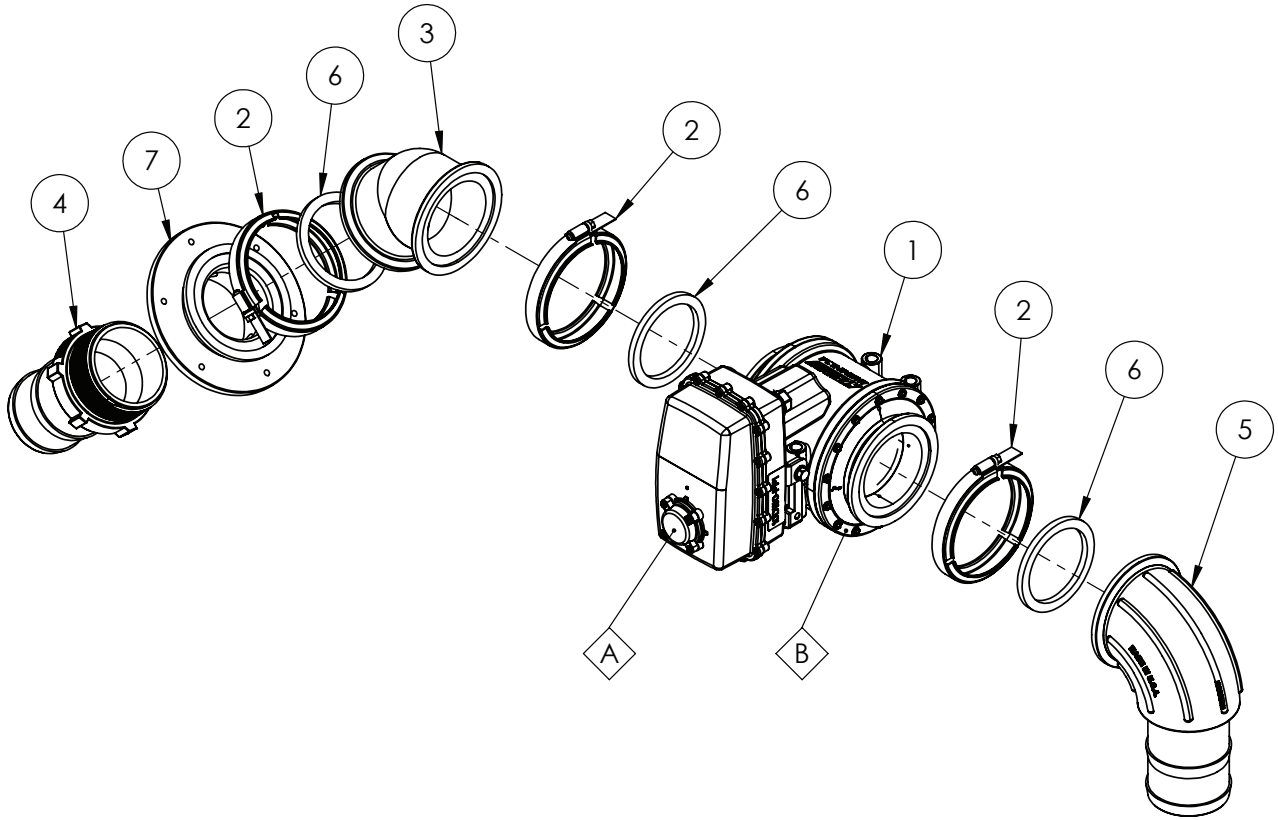

IF DESCRIPTION PREFIX IS ASSEMBLY DRAWING ONLY OR PRODUCTION DRAWING ONLY THE ITEM IS NOT FOR SALE			
ITEM	PART NUMBER	DESCRIPTION	QTY
1	GA2000144	BALL VALVE, MOTORISED, 2 WAY, 3" FLANGED CONNECTIONS, 3 SECOND, PWM, KZ VALVE	1
2	FC300	CLAMP, 3" FLANGE MANIFOLD, BANJO	3
3	GA2000070	ELBOW, 45°, 3" FULL PORT FLANGE, BANJO	1
4	GA5077741	HOSE BARB, STRAIGHT, 3 MALE THREAD X 3 HOSE, BANJO	1
5	GA2000148	PLUMBING FITTING, 3" FLANGE TO 3" BARB, SWEPT ELBOW, BANJO, M300BRBSWP90	1
6	GA5076723	SEAL, EPDM, SUIT 3 FLANGE FITTING, BANJO, 300G	3
7	GA4550590	TANK TOP INLET FITTING, 3" BANJO FLANGE AND 3" NPT FEMALE THREAD	1
GA4909443 GOLDACRES		VALVE ASSEMBLY, 3" FILL SHUT OFF, SERIES 3	REV C

Valve Assembly, 3” Front Fill, Shut Off

REPLACEMENT PARTS			
ITEM	PART NUMBER	DESCRIPTION	QTY
A	GA2000161	BALL VALVE, ACTUATOR ONLY, SUIT GA2000144, KZ VALVE	-
B	GA2000157	BALL VALVE, VALVE ONLY, SUIT GA2000144, KZ VALVE	-

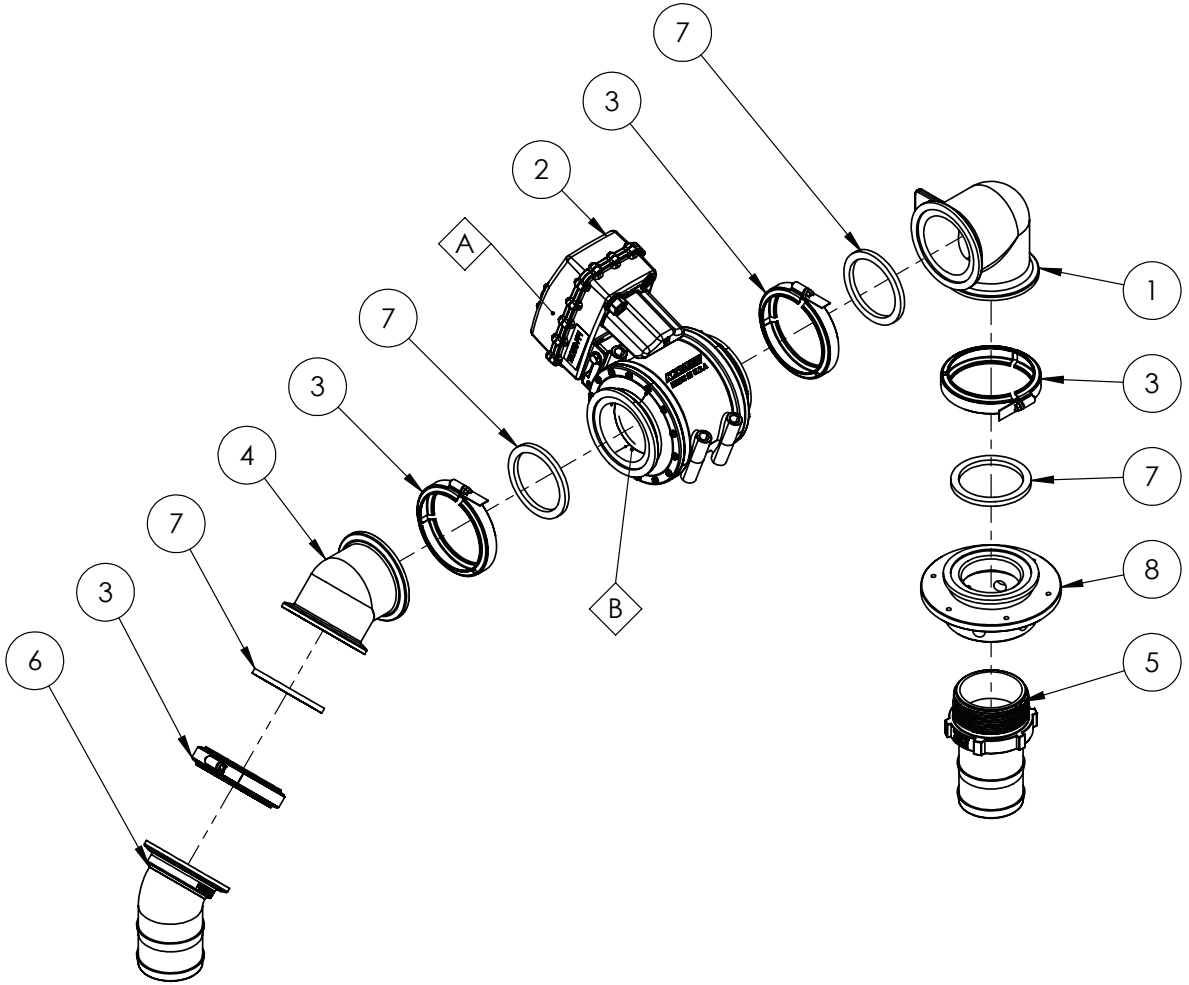

IF DESCRIPTION PREFIX IS ASSEMBLY DRAWING ONLY OR PRODUCTION DRAWING ONLY THE ITEM IS NOT FOR SALE			
ITEM	PART NUMBER	DESCRIPTION	QTY
1	GA5077877	3" FLANGE X 3"FLANGE-90 DEGREE	1
2	GA2000144	BALL VALVE, MOTORISED, 2 WAY, 3" FLANGED CONNECTIONS, 3 SECOND, PWM, KZ VALVE	1
3	FC300	CLAMP, 3" FLANGE MANIFOLD, BANJO	4
4	GA2000070	ELBOW, 45°, 3" FULL PORT FLANGE, BANJO	1
5	GA5077741	HOSE BARB, STRAIGHT, 3 MALE THREAD X 3 HOSE, BANJO	1
6	GA5077874	MANIFOLD HOSE BARB 3", 45 DEGREE, M300BRB45	1
7	GA5076723	SEAL, EPDM, SUIT 3 FLANGE FITTING, BANJO, 300G	4
8	GA4550590	TANK TOP INLET FITTING, 3" BANJO FLANGE AND 3" NPT FEMALE THREAD	1
GA4909444 GOLDACRES		VALVE ASSEMBLY, 3" FILL SHUT OFF, FRONT FILL, SERIES 3	REV 00

Main Tank, Agitator Assembly

ITEM (1) AND (19) FITTED FROM INSIDE OF TANK

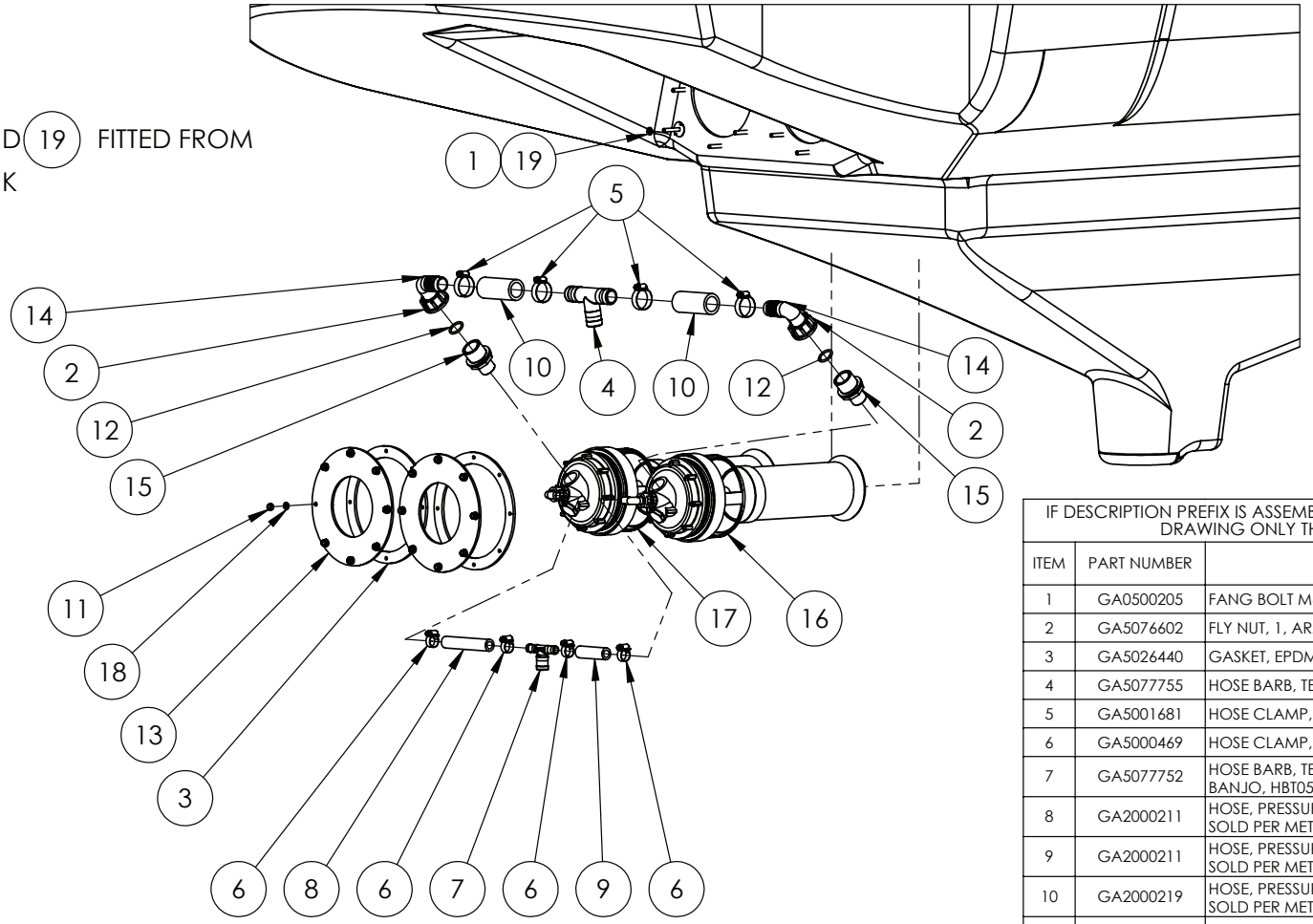

IF DESCRIPTION PREFIX IS ASSEMBLY DRAWING ONLY OR PRODUCTION DRAWING ONLY THE ITEM IS NOT FOR SALE			
ITEM	PART NUMBER	DESCRIPTION	QTY
1	GA0500205	FANG BOLT M6 X 35 SS	16
2	GA5076602	FLY NUT, 1, ARAG, 2002040	2
3	GA5026440	GASKET, EPDM, SUPERMIX AGITATOR MOUNT, MY25	2
4	GA5077755	HOSE BARB, TEE, 1 HOSE, BANJO, HBT100	1
5	GA5001681	HOSE CLAMP, 1" SS (20-32/12W)	4
6	GA5000469	HOSE CLAMP, 1/2" SS 12-20/9W3	4
7	GA5077752	HOSE BARB, TEE, 1/2 HOSE X 1/2 HOSE X 3/4 HOSE, BANJO, HBT050-075	1
8	GA2000211	HOSE, PRESSURE, 12mm, BLACK, 250PSI, HOS13P, SOLD PER METER	0.95
9	GA2000211	HOSE, PRESSURE, 12mm, BLACK, 250PSI, HOS13P, SOLD PER METER	0.85
10	GA2000219	HOSE, PRESSURE, 25mm, BLACK 250PSI, HOS25P, SOLD PER METER	0.16
11	GA5004429	NUT M6 NYLOC SS	16
12	GA5077675	O RING, 20.24 X 2.62, EPDM, G10041	2
13	GA4000787	PLATE, SUPER MIX AGITATOR MOUNT, FLANGE BRACKET, ALL, MY25	2
14	GA5078296	PLUMBING FITTING, HOSE TAIL 1", ELBOW, 90 DEGREE, 25mm, SUIT FLY NUT, ARAG 116425	2
15	GA5078324	REDUCER, MALE 1" TO MALE 3/4", ARAG, 2402043	2
16	GA4908705	SUPER MIX AGITATOR ASSEMBLY, NO BYPASS FITTING.	1
17	GA4908705	SUPER MIX AGITATOR ASSEMBLY, NO BYPASS FITTING.	1
18	GA5004437	WASHER M6 FLAT SS HD	16
19	GA5026590	WASHER M6 NEOPRENE	16
GA6101920 GOLDACRES		PRODUCTION DRAWING ONLY,TANK ASSEMBLY, CONFIGURABLE, G8 SERIES 3	REV 01

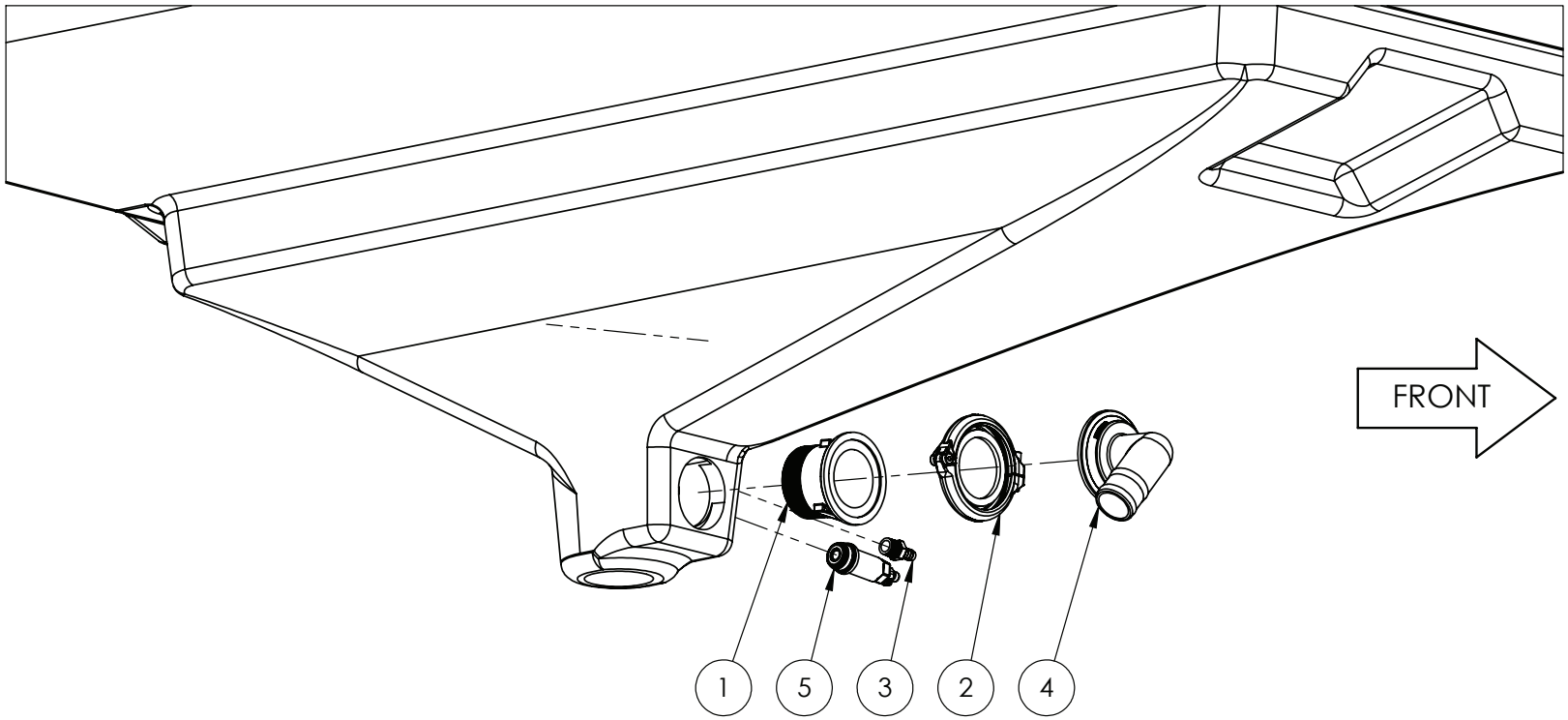

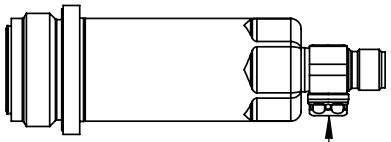

INSTALL TANK LEVEL SENSOR (5)
WITH BREATHER CAP FACING DOWN

IF DESCRIPTION PREFIX IS ASSEMBLY DRAWING ONLY OR PRODUCTION DRAWING ONLY THE ITEM IS NOT FOR SALE			
ITEM	PART NUMBER	DESCRIPTION	QTY
1	GA5077876	300 SERIES MNFLD 3" BSP THREAD	1
2	GA2000116	FLANGE CLAMP, AND GASKET, 3", SERIES 300, HYPRO	1
3	GA5049350	HOSE BARB, 1/2" BSPT MALE X 1/2" HOSE, BRASS	1
4	GA5077871	HOSE BARB, ELBOW, 90 DEGREE, 3" FLANGE X 2" HOSE BARB, BANJO	1
5	GA3001158	SENSOR, PRESSURE TRANSMITTER, 4-20MA, 1" M, 0 TO 0.4 BAR, M12, IFM PM1718	1
GA6101920 GOLDACRES		PRODUCTION DRAWING ONLY,TANK ASSEMBLY, CONFIGURABLE, G8 SERIES 3	REV 01

Super Mix Agitator Assembly

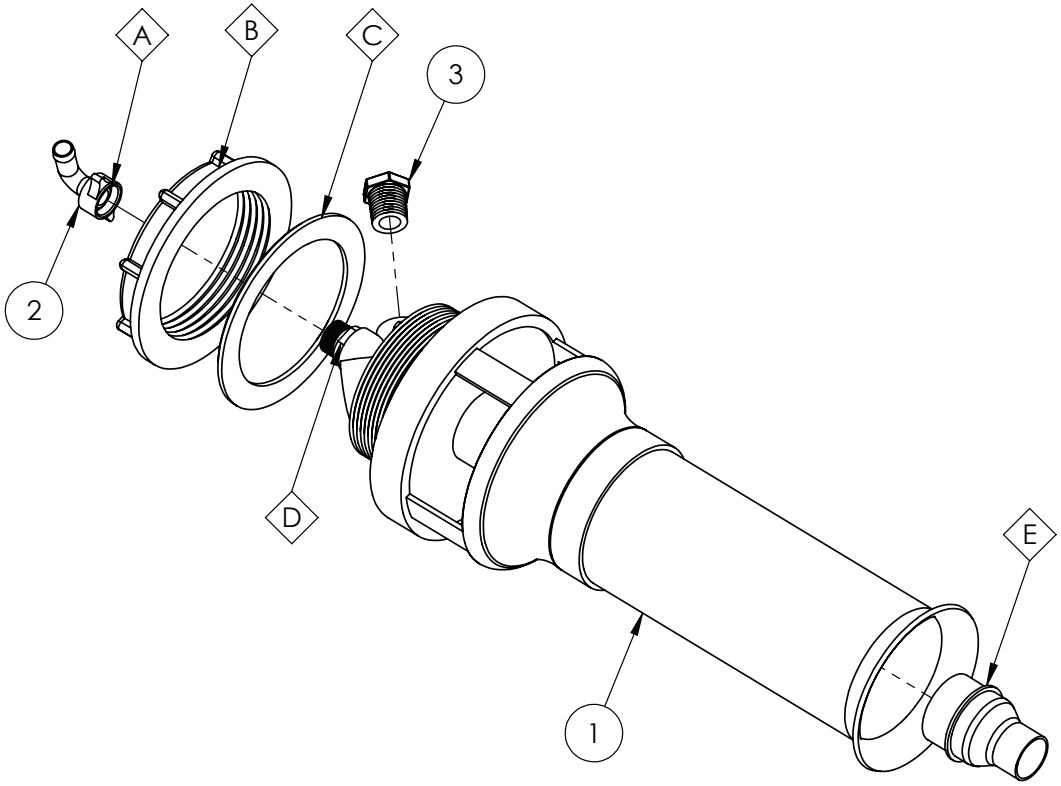

OPTIONAL PARTS			
ITEM	PART NUMBER	DESCRIPTION	QTY
A	GA5075653	SEAL, RUBBER, 11.8 ID X 18 OD X 2, 006100	1
B	GA2000298	FLY NUT, SUPERMIX AGITATOR, ARAG, 502053.040	1
C	GA5024555	SEAL, SUPERMIX AGITATOR 502053.050	1
D	GA5077038	AGITATOR, SUPER MIX, 3mm JET, ARAG, 502054	1
E	GA2000295	NOZZLE, REDUCER, LOW PRESSURE, SUPERMIX AGITATOR, ARAG, 502053.110	1

IF DESCRIPTION PREFIX IS ASSEMBLY DRAWING ONLY OR PRODUCTION DRAWING ONLY THE ITEM IS NOT FOR SALE			
ITEM	PART NUMBER	DESCRIPTION	QTY
1	GA5077038	AGITATOR MIXER BODY WITH NUT AND RUBBER SEAL	1
2	GA5075657	HOSE BARB, ELBOW, 90 DEGREE, 13mm HOSE, INCLUDING 1/2 FLY NUT AND SEAL, BRASS, ARAG	1
3	GA5077943	PLUG, 1/2 MALE THREAD, BANJO	1
GA4908705 GOLDACRES		SUPER MIX AGITATOR ASSEMBLY, NO BYPASS FITTING.	REV 01

Site Tube Mounting

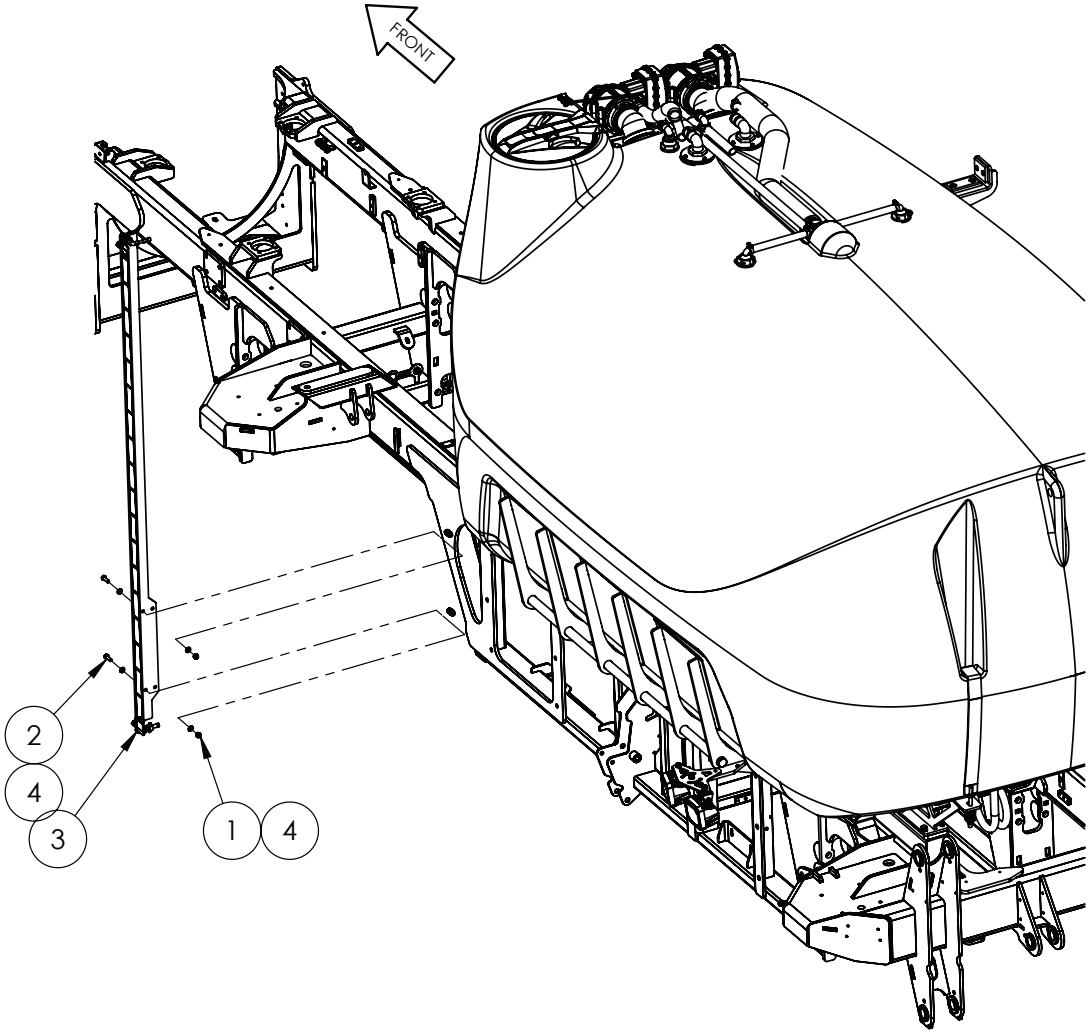

IF DESCRIPTION PREFIX IS ASSEMBLY DRAWING ONLY OR PRODUCTION DRAWING ONLY THE ITEM IS NOT FOR SALE			
ITEM	PART NUMBER	DESCRIPTION	QTY
1	GA5000141	NUT M10 NYLOC ZP	4
2	GA5065455	SET SCREW M10 X 30 GR8.8 ZP	4
3	GA6101989	SIGHT TUBE ASSEMBLY, G8 SERIES 3	1
4	GA5000117	WASHER M10 FLAT SS HD	8
GA7800321 GOLDACRES		ASSEMBLY DRAWING ONLY, WET SIGHT TUBE INSTALLATION, G8 S3	REV 00.B

Sight Tube Assembly

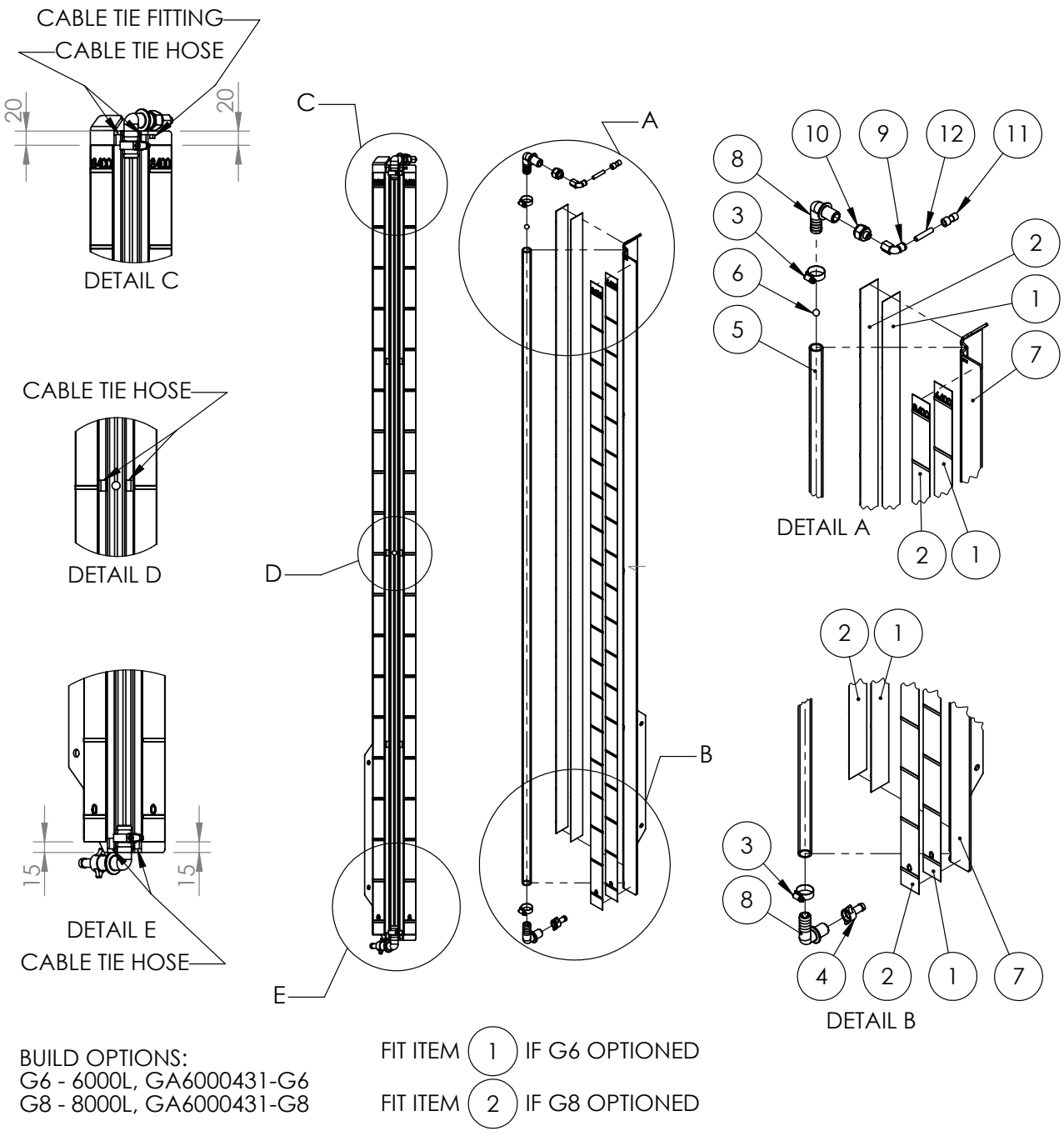

BUILD OPTIONS:
G6 - 6000L, GA6000431-G6
G8 - 8000L, GA6000431-G8

FIT ITEM (1) IF G6 OPTIONED

FIT ITEM (2) IF G8 OPTIONED

IF DESCRIPTION PREFIX IS ASSEMBLY DRAWING ONLY OR PRODUCTION DRAWING ONLY THE ITEM IS NOT FOR SALE			
ITEM	PART NUMBER	DESCRIPTION	QTY
1	GA8702383	DECAL, SIGHT TUBE G6 SERIES 3 MY25	2
2	GA8702307	DECAL, SIGHT TUBE G8 SERIES 3 MY25	2
3	GA5000999	HOSE CLAMP, 3/4" SS (16-27/12W)	2
4	GA5075655	HOSE BARB, BRASS, 13mm HOSE X FLY NUT END, ARAG	1
5	GA2000213	HOSE, CLEAR, 18mm, SIGHT TUBE, HOS18SIGHT	2.05
6	GA2000589	INDICATOR BALL, SIGHT TUBE FLOAT, RED	1
7	GA4000123	PLATE, SIGHT TUBE, SERIES 3	1
8	GA2000619	PLUMBING FITTING, HOSE BARB ELBOW, 1/2" BSPP MALE X 3/4" BARB, SIGHT TUBE	2
9	GA7000015	PNEUMATIC FITTING, FEMALE 1/4" BSPP X 8mm PUSH IN, FEMALE STUD ELBOW	1
10	GA7000114	PNEUMATIC FITTING, REDUCER, 1/2" BSPT FEMALE X 1/4" BSPT MALE, ZP	1
11	GA5065175	PUSH IN FITTING, REDUCER, STRAIGHT, 8mm TO 6mm	1
12	GA5004382	TUBE, NYLON, 8mm, BLACK	0.4
GA6101989 GOLDACRES		SIGHT TUBE ASSEMBLY, G8 SERIES 3	REV 00

Plumbing Tee Assembly, Sight Tube

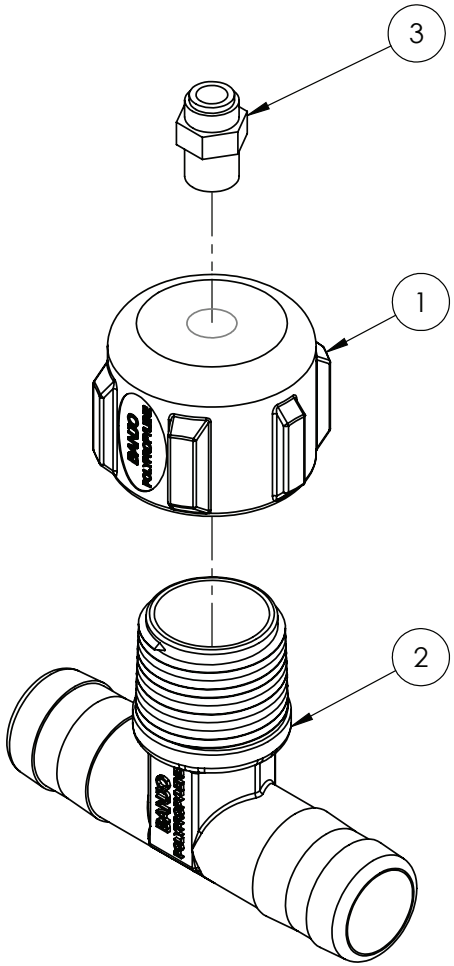

IF DESCRIPTION PREFIX IS ASSEMBLY DRAWING ONLY OR PRODUCTION DRAWING ONLY THE ITEM IS NOT FOR SALE			
ITEM	PART NUMBER	DESCRIPTION	QTY
1	GA4909448	PLUMBING FITTING, CAP REDUCER, 1" NPT X 1/4" BSPT	1
2	GA2000582	PLUMBING FITTING, TEE, 1" BARB X 1" BARB X 1" NPT MALE, HBT100-100	1
3	GA5045140	PNEUMATIC FITTING, NIPPLE, PUSH IN 6mm X 1/4" BSPT, BRASS	1
GA4909431 GOLDACRES		PLUMBING TEE ASSEMBLY, SIGHT TUBE, SERIES 3	REV 00

Cradle Assembly, Main Tank

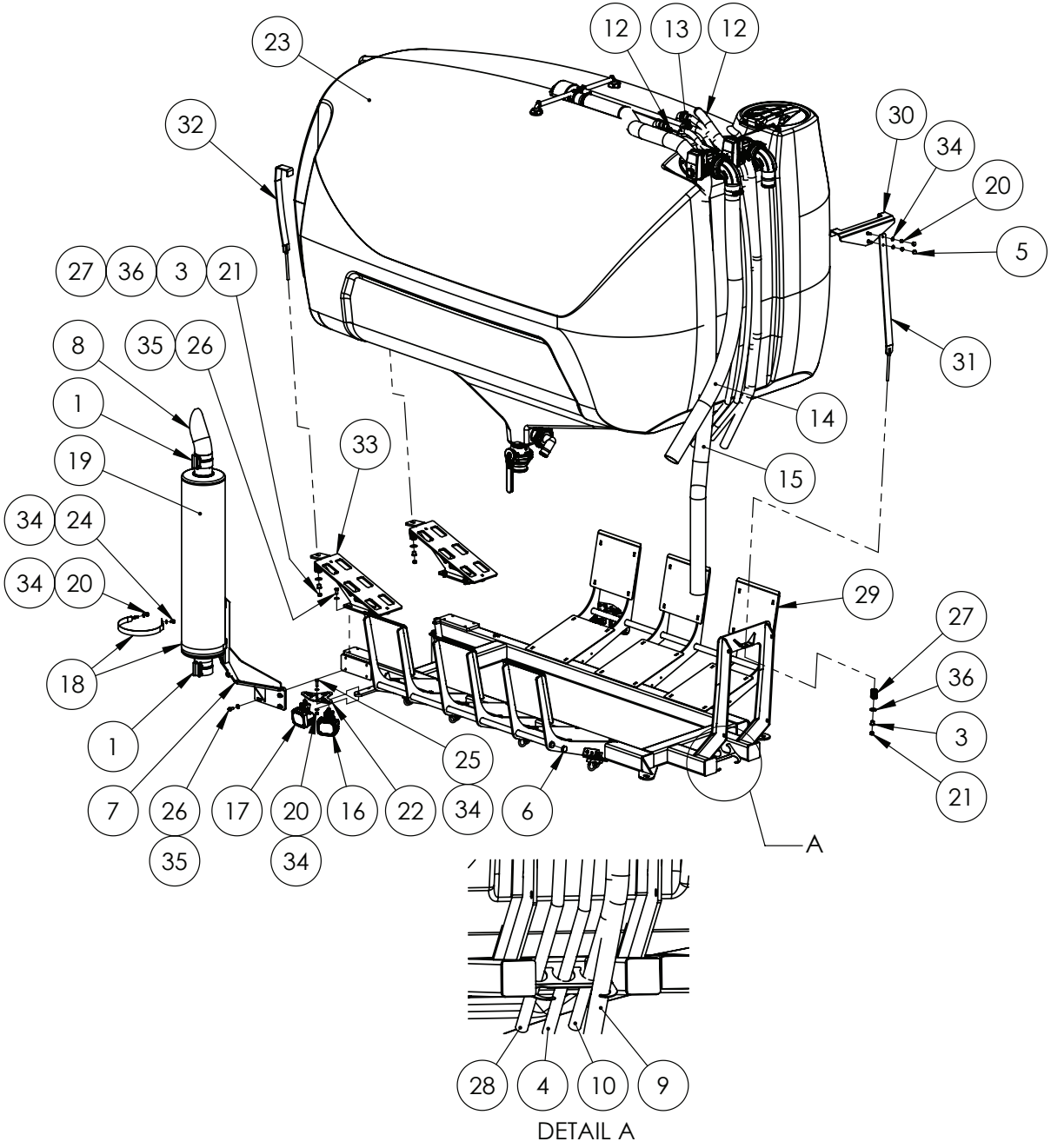

IF DESCRIPTION PREFIX IS ASSEMBLY DRAWING ONLY OR PRODUCTION DRAWING ONLY THE ITEM IS NOT FOR SALE			
ITEM	PART NUMBER	DESCRIPTION	QTY
1	GA2700015	4" TORCTITE EXHAUST CLAMP	2
2	GA4909685	ASSEMBLY DRAWING ONLY, 1-1/2" HOSE GUIDE BRACKET, ARRANGEMENT D	2
3	MACH0152	BUSH WITH SHOULDER, 12.3 ID X 25 OD X 21 LONG, SUIT PARALIFT PIN BOLTS	3
4	GA2000219	CHEMICAL PUMP, HOSE 32	4.05
5	GA5026740	CAP, PLASTIC DOME CAP, M10	2
6	GA5026663	END CAP, PLASTIC, BLACK, INSERT, ROUND, DOMED. 33.7mm, 2.6 - 4mm WALL	4
7	GA4605011	EXHAUST MOUNT, G8 SERIES 3	1
8	GA2700212	EXHAUST TIP, BLACK, 4" X 400mm	1
9	GA2000227	HOPPER , G8 TANK HOSE 38	6
10	GA2000219	HOSE RECIRC 1, HOSE 16	2.7
11	GA5003835	HOSE CLAMP 3" SS (70-90/12W3)	1
12	GA5001681	HOSE CLAMP, 1" SS (20-32/12W)	3
13	GA5002873	HOSE CLAMP, 1 1/2" SS (32-50/12W)	1
14	GA2000232	HOSE, SUCTION, 75mm, WIRE REINFORCED, HOS75S, 20M ROLL	1.8
15	GA2000231	HOSE, 3" PVC, TANK OVERFLOW, G8 S3	4
16	GA3001337	LIGHT, LED, FLOOD, ULTRA BEAM S SERIES, HELLA, 1GA 995 706-001	2
17	GA3001338	LIGHT, LED, SPOT, ULTRA BEAM S SERIES, HELLA, 1GA 995 706-011	2
18	GA4661580	MOUNT STRAP, EXHAUST MUFFLER, G3V G4V	2
19	GA5069240	MUFFLER EXHAUST, 4", 5200 - 6000L CROP CRUISER MY11 ON	1
20	GA5000141	NUT M10 NYLOC ZP	6
21	GA5012461	NUT M12 NYLOC ZP	3
22	GA4000644	PLATE, LIGHT MOUNT, 1 INTO 3, S3	2
23	GA6101920	PRODUCTION DRAWING ONLY,TANK ASSEMBLY, CONFIGURABLE, G8 SERIES 3	1
24	GA5006143	SET SCREW M10 X 16 GR8.8 ZP	2
25	GA5006111	SET SCREW M10 X 35 GR8.8 ZP	2
26	GA5011229	SET SCREW M12 X 25 GR8.8 ZP	12
27	GA5006191	SPRING GROUND GLIDER CLACKER	3
28	GA2000219	TANK RINCE, HOSE 42	4.2
29	GA4604935	TANK CRADLE, G6 & G8 CROP CRUISER, SERIES 3	1
30	GA4605042	TANK RETAINING BRACKET, FRONT UPPER, S3	1
31	GA4604960	TANK STRAP, G8 FRONT, SERIES 3	1
32	GA4604950	TANK STRAP, G8 REAR, SERIES 3	2
33	GA4605009	TANK SUPPORT, REAR, SERIES 3	2
34	GA5000117	WASHER M10 FLAT SS HD	10
35	GA5000577	WASHER M12 FLAT SS HD	12
36	GA5001741	WASHER M20 FLAT SS HD	3
GA6101885 GOLDACRES		TANK AND CRADLE ASSEMBLY, G8 CROP CRUISER, SERIES 3	REV 01

Hose Guide Bracket Mounting, Main Tank

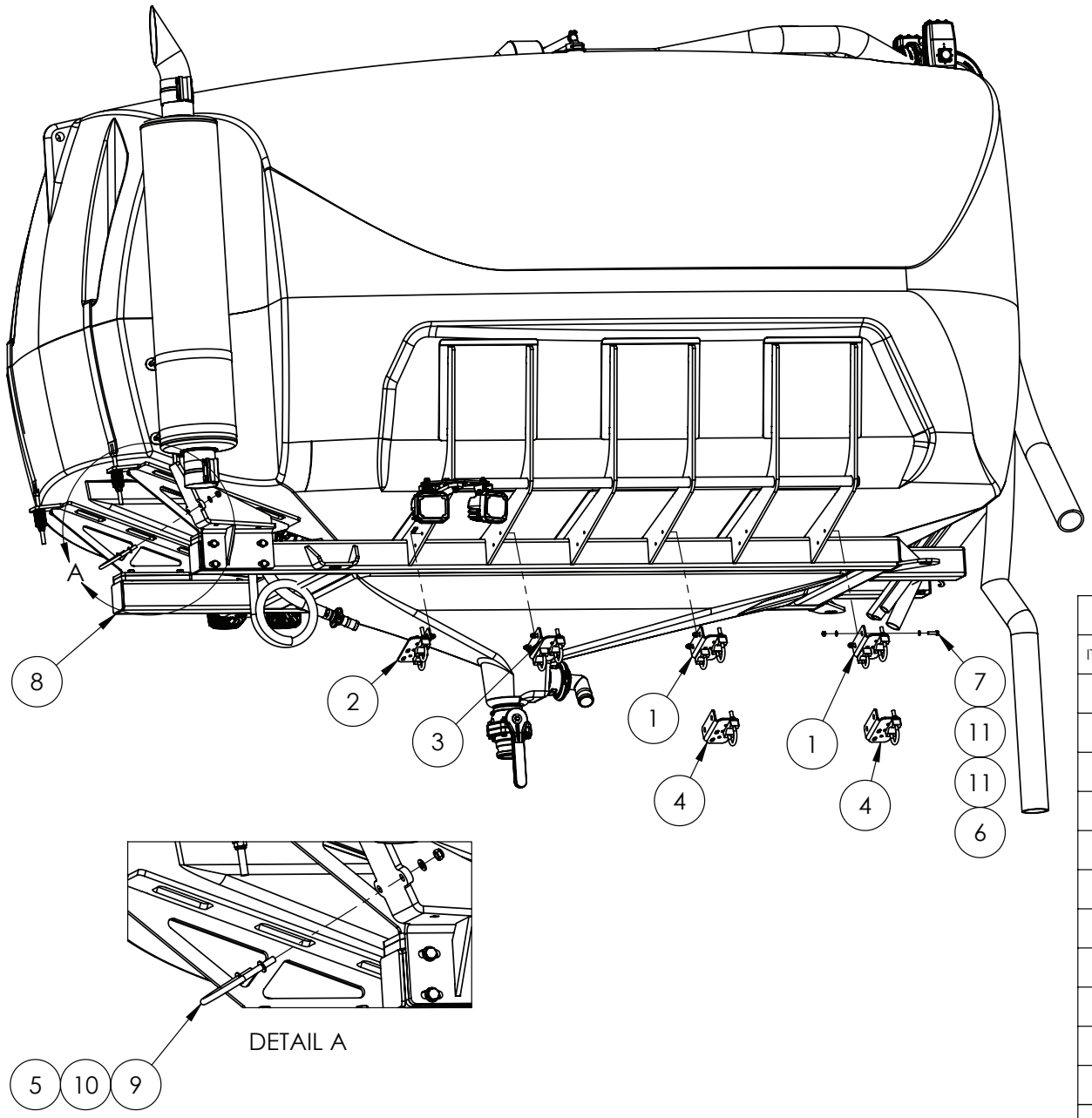

IF DESCRIPTION PREFIX IS ASSEMBLY DRAWING ONLY OR PRODUCTION DRAWING ONLY THE ITEM IS NOT FOR SALE			
ITEM	PART NUMBER	DESCRIPTION	QTY
1	GA4909739	ASSEMBLY DRAWING ONLY, 1-1/2" HOSE GUIDE BRACKET, ARRANGEMENT A	2
2	GA4909740	ASSEMBLY DRAWING ONLY, 1-1/2" HOSE GUIDE BRACKET, ARRANGEMENT B	1
3	GA4909741	ASSEMBLY DRAWING ONLY, 1-1/2" HOSE GUIDE BRACKET, ARRANGEMENT C	1
4	GA4909685	ASSEMBLY DRAWING ONLY, 1-1/2" HOSE GUIDE BRACKET, ARRANGEMENT D	2
5	GA5000141	NUT M10 NYLOC ZP	2
6	GA5004917	NUT M8 NYLOC ZP	8
7	GA5011475	SET SCREW M8 X 30 GR8.8 ZP	8
8	GA4604935	TANK CRADLE, G6 & G8 CROP CRUISER, SERIES 3	1
9	GA5070905	U BOLT SUIT PARALIFT ARM HYDRAULIC HOSE	1
10	GA5000117	WASHER M10 FLAT SS HD	2
11	GA5003643	WASHER M8 FLAT SS HD	16
GA6101885 GOLDACRES		TANK AND CRADLE ASSEMBLY, G8 CROP CRUISER, SERIES 3	REV 01

Bracket Assembly, Hose Guide, (Arrangement ‘A’)

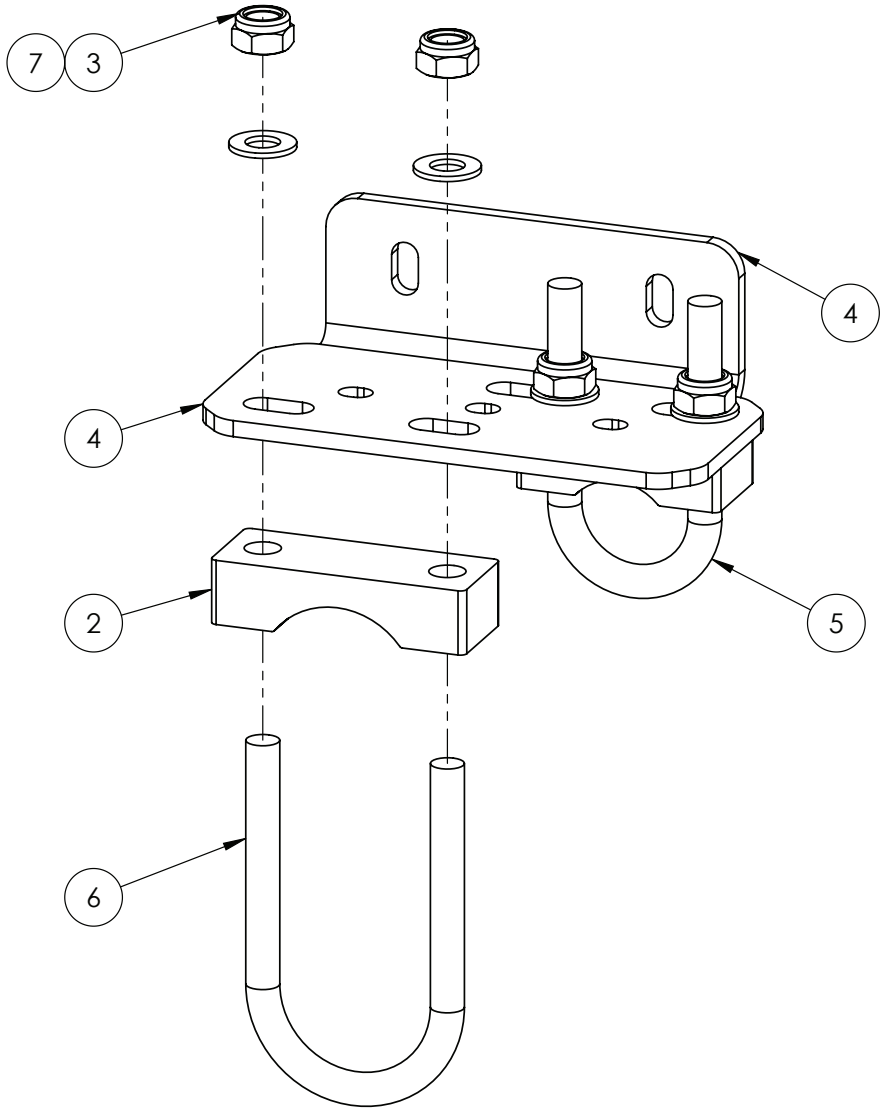

IF DESCRIPTION PREFIX IS ASSEMBLY DRAWING ONLY OR PRODUCTION DRAWING ONLY THE ITEM IS NOT FOR SALE			
ITEM	PART NUMBER	DESCRIPTION	QTY
1	GA5026541	CLAMP, U-BOLT SUPPORT, HYDAC, 1"	1
2	GA5026542	CLAMP, U-BOLT SUPPORT, HYDAC, 1.5"	1
3	GA0500222	NUT M10 NYLOC GAL	4
4	GA4000784	PLATE, HOSE GUIDE BRACKET, 1-1/2", 90 DEGREE MOUNT	1
5	GA0500219	U BOLT, ROUND TOP, M10 X 34 X 85	1
6	GA0500220	U BOLT, ROUND TOP, M10 X 48 X 100	1
7	GA0500223	WASHER M10 FLAT GAL	4
GA4909739 GOLDACRES		ASSEMBLY DRAWING ONLY, 1-1/2" HOSE GUIDE BRACKET, ARRANGEMENT A	REV 00

Bracket Assembly, Hose Guide, (Arrangement ‘B’)

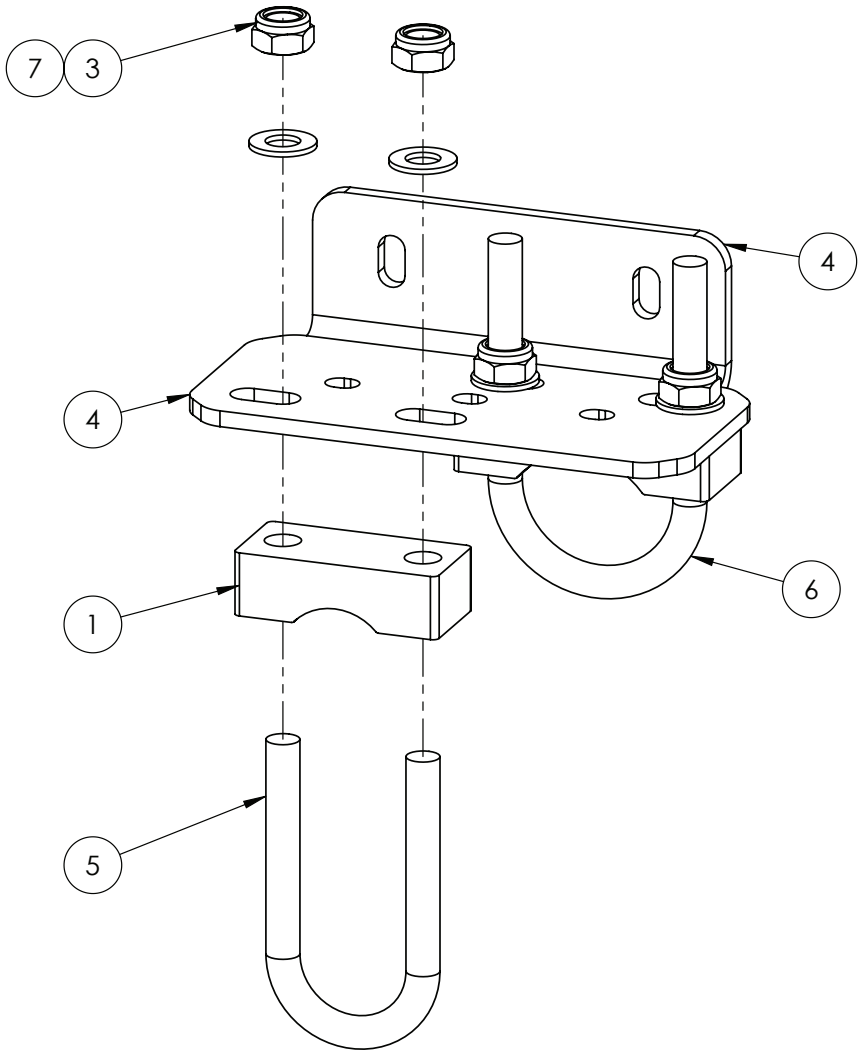

IF DESCRIPTION PREFIX IS ASSEMBLY DRAWING ONLY OR PRODUCTION DRAWING ONLY THE ITEM IS NOT FOR SALE			
ITEM	PART NUMBER	DESCRIPTION	QTY
1	GA5026541	CLAMP, U-BOLT SUPPORT, HYDAC, 1"	1
2	GA5026542	CLAMP, U-BOLT SUPPORT, HYDAC, 1.5"	1
3	GA0500222	NUT M10 NYLOC GAL	4
4	GA4000784	PLATE, HOSE GUIDE BRACKET, 1-1/2", 90 DEGREE MOUNT	1
5	GA0500219	U BOLT, ROUND TOP, M10 X 34 X 85	1
6	GA0500220	U BOLT, ROUND TOP, M10 X 48 X 100	1
7	GA0500223	WASHER M10 FLAT GAL	4
GA4909740 GOLDACRES		ASSEMBLY DRAWING ONLY, 1-1/2" HOSE GUIDE BRACKET, ARRANGEMENT B	REV 00

Bracket Assembly, Hose Guide, (Arrangement ‘C’)

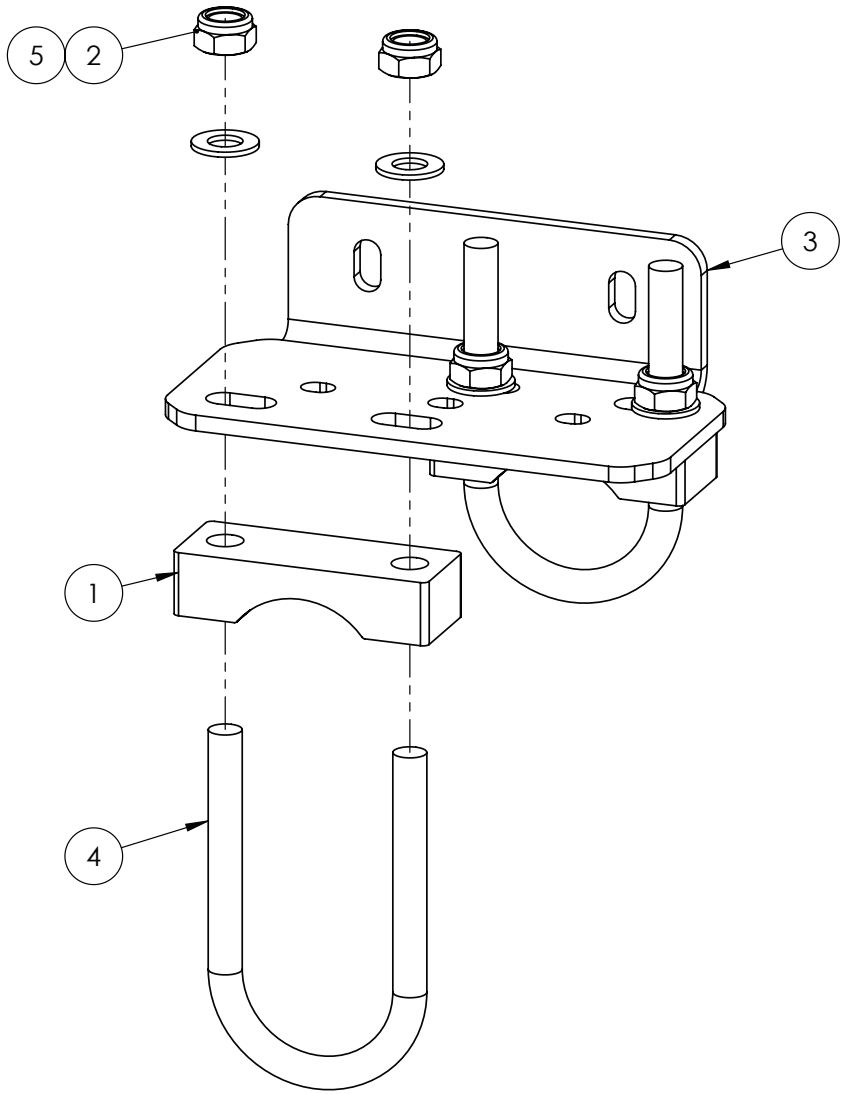

IF DESCRIPTION PREFIX IS ASSEMBLY DRAWING ONLY OR PRODUCTION DRAWING ONLY THE ITEM IS NOT FOR SALE			
ITEM	PART NUMBER	DESCRIPTION	QTY
1	GA5026542	CLAMP, U-BOLT SUPPORT, HYDAC, 1.5"	2
2	GA0500222	NUT M10 NYLOC GAL	4
3	GA4000784	PLATE, HOSE GUIDE BRACKET, 1-1/2", 90 DEGREE MOUNT	1
4	GA0500220	U BOLT, ROUND TOP, M10 X 48 X 100	2
5	GA0500223	WASHER M10 FLAT GAL	4
GA4909741 GOLDACRES		ASSEMBLY DRAWING ONLY, 1-1/2" HOSE GUIDE BRACKET, ARRANGEMENT C	REV 00

Bracket Assembly, Hose Guide, (Arrangement ‘D’)

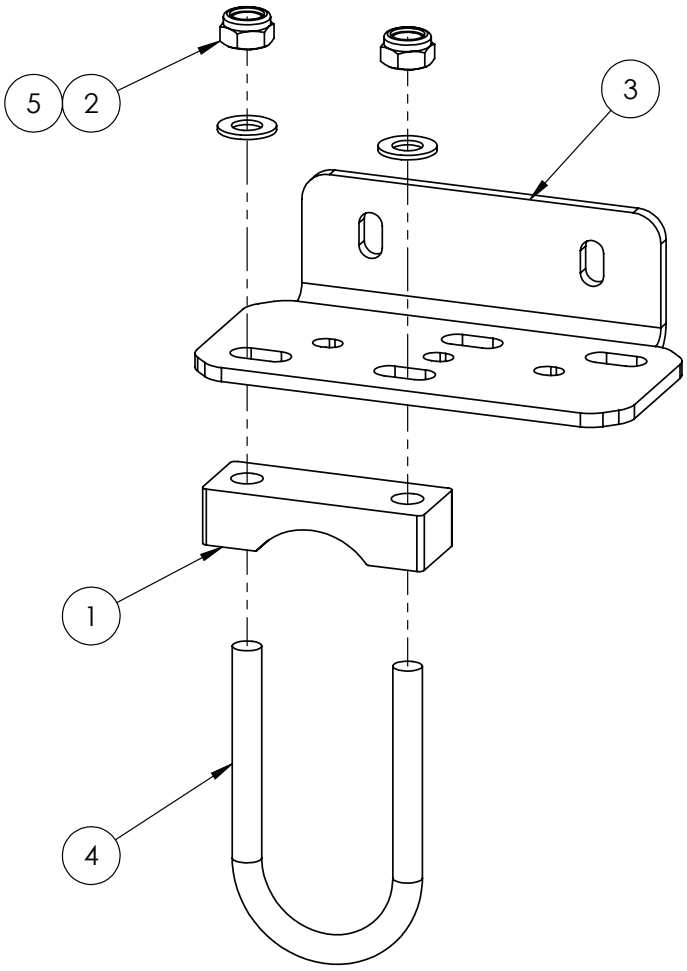

IF DESCRIPTION PREFIX IS ASSEMBLY DRAWING ONLY OR PRODUCTION DRAWING ONLY THE ITEM IS NOT FOR SALE			
ITEM	PART NUMBER	DESCRIPTION	QTY.
1	GA5026542	CLAMP, U-BOLT SUPPORT, HYDAC, 1.5"	1
2	GA0500222	NUT M10 NYLOC GAL	2
3	GA4000784	PLATE, HOSE GUIDE BRACKET, 1-1/2", 90 DEGREE MOUNT	1
4	GA0500220	U BOLT, ROUND TOP, M10 X 48 X 100	1
5	GA0500223	WASHER M10 FLAT GAL	2
GA4909685 GOLDACRES		ASSEMBLY DRAWING ONLY, 1-1/2" HOSE GUIDE BRACKET, ARRANGEMENT D	REV 00

Agitator Plumbing, Main Tank

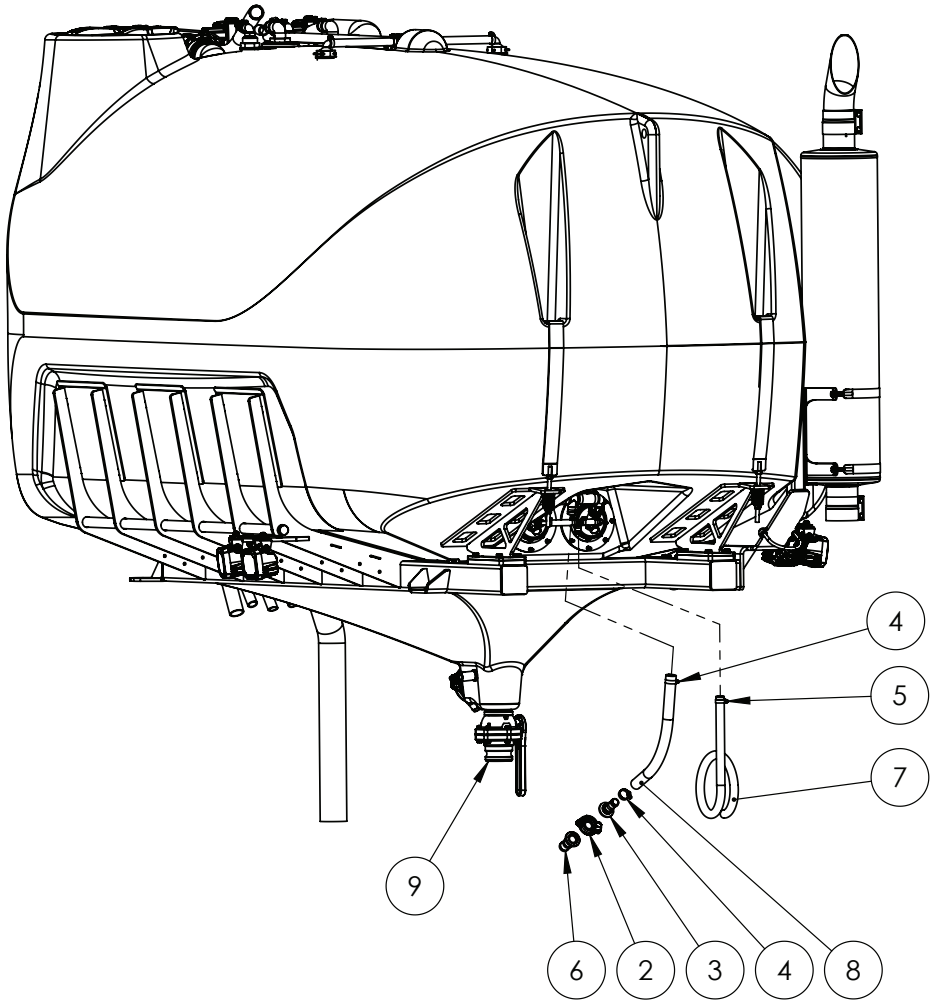

IF DESCRIPTION PREFIX IS ASSEMBLY DRAWING ONLY OR PRODUCTION DRAWING ONLY THE ITEM IS NOT FOR SALE			
ITEM	PART NUMBER	DESCRIPTION	QTY
1	GA4909685	ASSEMBLY DRAWING ONLY, 1-1/2" HOSE GUIDE BRACKET, ARRANGEMENT D	2
2	GA2000113	FLANGE CLAMP, AND GASKET, 1", SERIES 100, HYPRO	1
3	GA5077811	HOSE BARB, STRAIGHT, 1 FLANGE X 1 HOSE, BANJO	1
4	GA5001681	HOSE CLAMP, 1" SS (20-32/12W)	2
5	GA5000999	HOSE CLAMP, 3/4" SS (16-27/12W)	1
6	GA5077806	HOSE BARB, STRAIGHT, 1 FLANGE X 1 1/4 HOSE, BANJO	1
7	GA2000216	HOSE, PRESSURE, 20mm, BLACK 250PSI, HOS20P, SOLD PER METER	1.7
8	GA2000219	HOSE, PRESSURE, 25mm, BLACK 250PSI, HOS25P, SOLD PER METER	0.5
9	GA5078204	VALVE, BALL, 3", MALE NPT, MALE CAM LOCK, STUBBLY, LONG HANDLE, BANJO, VSFMT300	1
GA6101885 GOLDACRES		TANK AND CRADLE ASSEMBLY, G8 CROP CRUISER, SERIES 3	REV 01

Tank Assembly, Front Mount 3PL

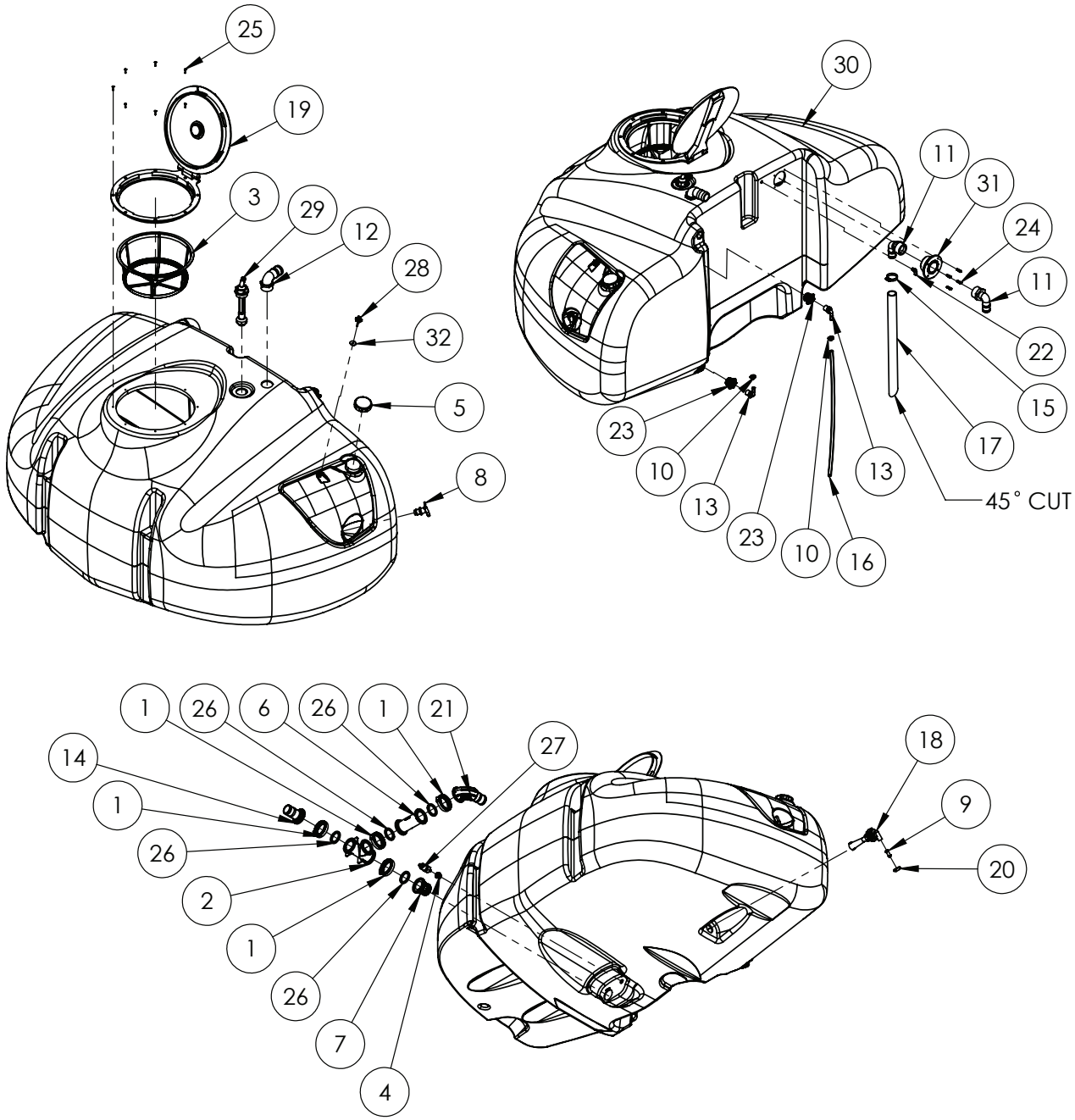

IF DESCRIPTION PREFIX IS ASSEMBLY DRAWING ONLY OR PRODUCTION DRAWING ONLY THE ITEM IS NOT FOR SALE			
ITEM	PART NUMBER	DESCRIPTION	QTY
1	FC220	2 FULL PORT WORM SCREW CLAMP	4
2	GA5077868	2 MANIFOLD TEE - 220 SERIES	1
3	GA5076715	BASKET FILTER D.400 X 185 ARAG	1
4	GA5078005	BUSH, REDUCING, POLY, 1/2" MALE THREAD X 1/4" FEMALE THREAD, BANJO, RB050-025	1
5	GA5026225	CAP, 80X6 WITH BREATHING DEVICE, FOR 20L HANDWASH TANK, MEDIUM 3PL	1
6	GA2000043	COUPLING, 2 X 2 FULL PORT FLANGE, 6", BANJO	1
7	GA5077866	COUPLING, 2" FULL PORT FLANGE X 2" MALE THREAD, BANJO	1
8	GA5078857	HAND VALVE, 20mm, SUIT 20L HAND WASH TANK, VERZELLESI TANKS	1
9	GA5078264	HOSE BARB, 1/2", D13 WITH O RING, UDOR 060826	1
10	GA5000469	HOSE CLAMP, 1/2" SS 12-20/9W3	2
11	GA5077738	HOSE BARB, ELBOW, 90 DEGREE, 2" MALE THREAD X 1 1/2" HOSE	2
12	GA5077740	HOSE BARB, ELBOW, 90 DEGREE, 2" MALE THREAD X 2" HOSE, BANJO	1
13	GA5077710	HOSE BARB, ELBOW, 90 DEGREE, 3/4 MALE THREAD X 1/2 HOSE, BANJO	2
14	GA5077859	HOSE BARB, STRAIGHT, 2 FLANGE X 2 HOSE, BANJO	1
15	GA5002873	HOSE CLAMP, 1 1/2" SS (32-50/12W)	1
16	GA2000209	HOSE, CLEAR, 12mm, SIGHT TUBE, HOS12SIGHT, CUT TO 1400mm	1
17	GA2000227	HOSE, SUCTION, PVC, 40mm, BLACK, HOS40PVC, POWELL OPTIMA, 30M ROLL	1
18	GA5010405	HYDROJET AGITATOR, 1-1/2" MOUNTING THREAD, 1/2" INLET, RED, D004001	1
19	GA5076886	LID, HINGED, BLACK PLASTIC, SUIT LEFT HAND SIDE POD DOOR	1
20	GA5075787	NUT, 1/2", BRASS WITH TABS, UDOR, 060409	1
21	GA2000071	PLUMBING FITTING, SWEEP ELBOW, 90, 2" FLANGE TO 2" BARB, M220BRBSWP90, BANJO	1
22	GA5052690	PNEUMATIC FITTING, ELBOW, 90 DEGREE, 1/4 BSP MALE X 8mm PUSH TYPE, METAL	1
23	GA5078015	REDUCING BUSH, 1 1/4 MALE THREAD X 3/4 FEMALE THREAD, BANJO	2
24	GA5000527	SCREW PAN HEAD 12G X 25mm SS	4
25	GA5014819	SCREW SELF TAPPER 10G X 1 SS	8
26	GA5076615	SEAL, EPDM, SUIT 2" FLANGE FITTING, BANJO, 200G	4
27	GA3001157	SENSOR, PRESSURE TRANSMITTER, 4-20MA, 1/4" M, 0 TO 0.25 BAR, M12, IFM PA3528	1
28	GA5026691	STAR KNOB 30 OD MALE M6 X 40	1
29	GA4909459	TANK RINSE NOZZLE ASSEMBLY, SERIES 3	1
30	GA8500052	TANK, 1500L, FRONT MOUNT, INC HAND WASH	1
31	GA4583370	THREADED TANK FLANGE 2"	1
32	GA5017645	WASHER 1/4" X 1 1/4" FLAT SS	1
GA4909622 GOLDACRES		ASSEMBLY DRAWING, TANK ASSY, 1500L 3PL FRONT MOUNT	REV 00

Rinse Tank Assembly

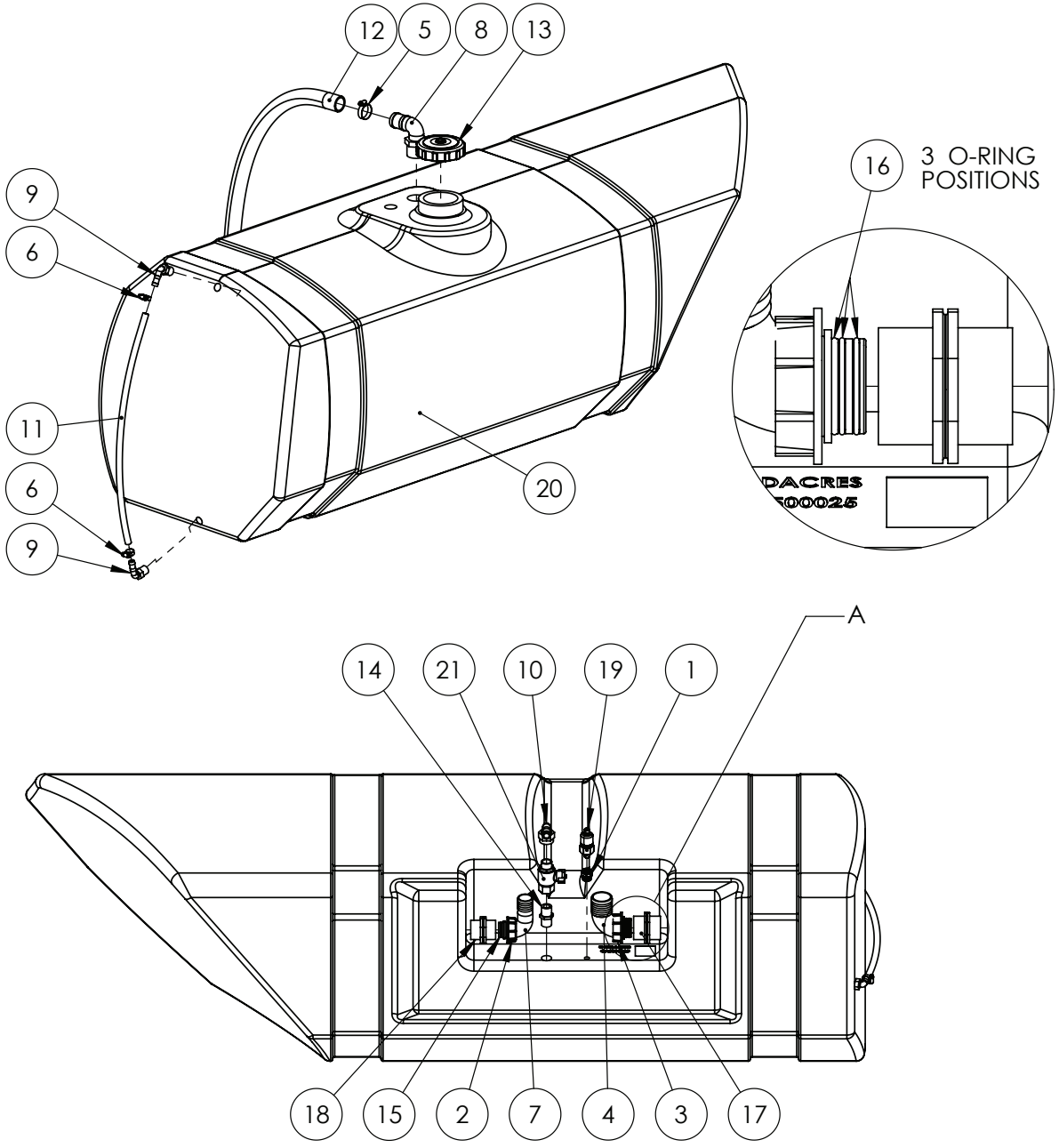

IF DESCRIPTION PREFIX IS ASSEMBLY DRAWING ONLY OR PRODUCTION DRAWING ONLY THE ITEM IS NOT FOR SALE			
ITEM	PART NUMBER	DESCRIPTION	QTY
1	GA5078005	BUSH, REDUCING, POLY, 1/2" MALE THREAD X 1/4" FEMALE THREAD, BANJO, RB050-025	1
2	GA5076604	FLY NUT, 1 1/2", ARAG, 2002060	1
3	GA5076605	FLY NUT, 2", ARAG, 2002070	1
4	GA5076262	HOSE BARB, ELBOW, 90 DEGREE, 2" FLY NUT END X 52 mm HOSE, ARAG	1
5	GA5002783	HOSE CLAMP, 1 1/4, SS (30-45/13W)	1
6	GA5000469	HOSE CLAMP, 1/2" SS 12-20/9W3	2
7	GA5076260	HOSE BARB, ELBOW, 90 DEGREE, 1 1/2 FLY NUT END X 40mm HOSE	1
8	GA5077736	HOSE BARB, ELBOW, 90 DEGREE, 1 1/2" MALE THREAD X 1 1/2" HOSE, BANJO	1
9	GA5077708	HOSE BARB, ELBOW, 90 DEGREE, 1/2 MALE THREAD X 1/2 HOSE, BANJO, HB050-90	2
10	GA5077746	HOSE BARB, ELBOW, 90 DEGREE, 3/4 FEMALE THREAD X 3/4 HOSE, BANJO, HBF075-90	1
11	GA2000209	HOSE, CLEAR, 12mm, SIGHT TUBE, HOS12SIGHT	1
12	GA2000227	HOSE, SUCTION, PVC, 40mm, BLACK, HOS40PVC, POWELL OPTIMA, 30M ROLL	1.05
13	GA5076885	LID, DIAMETER 113, WITH BREATHER	1
14	GA5077913	NIPPLE, 3/4 MALE X 3/4 MALE, SHORT, BANJO	1
15	GA5077679	O RING, 30 X 3 mm, G10061	1
16	GA5076097	O RING, 42.52 X 2.62, 110193	3
17	GA5078410	PLUMBING FITTING, NIPPLE, 2", ARAG, 2502070	1
18	GA5078409	PLUMBING FITTING, NIPPLE, 1 1/2", ARAG, 2502060	1
19	GA3001157	SENSOR, PRESSURE TRANSMITTER, 4-20MA, 1/4" M, 0 TO 0.25 BAR, M12, IFM PA3528	1
20	GA8500025	TANK, RINSE, G6, MY20	1
21	GA5018315	VALVE, BALL, 20mm, 3/4" MALE, FEMALE, BLACK BUTTERFLY HANDLE, BRASS	1
GA4909532 GOLDACRES		RINSE WATER TANK ASSEMBLY S3 MY25	REV 00

Hand Wash Tank Assembly

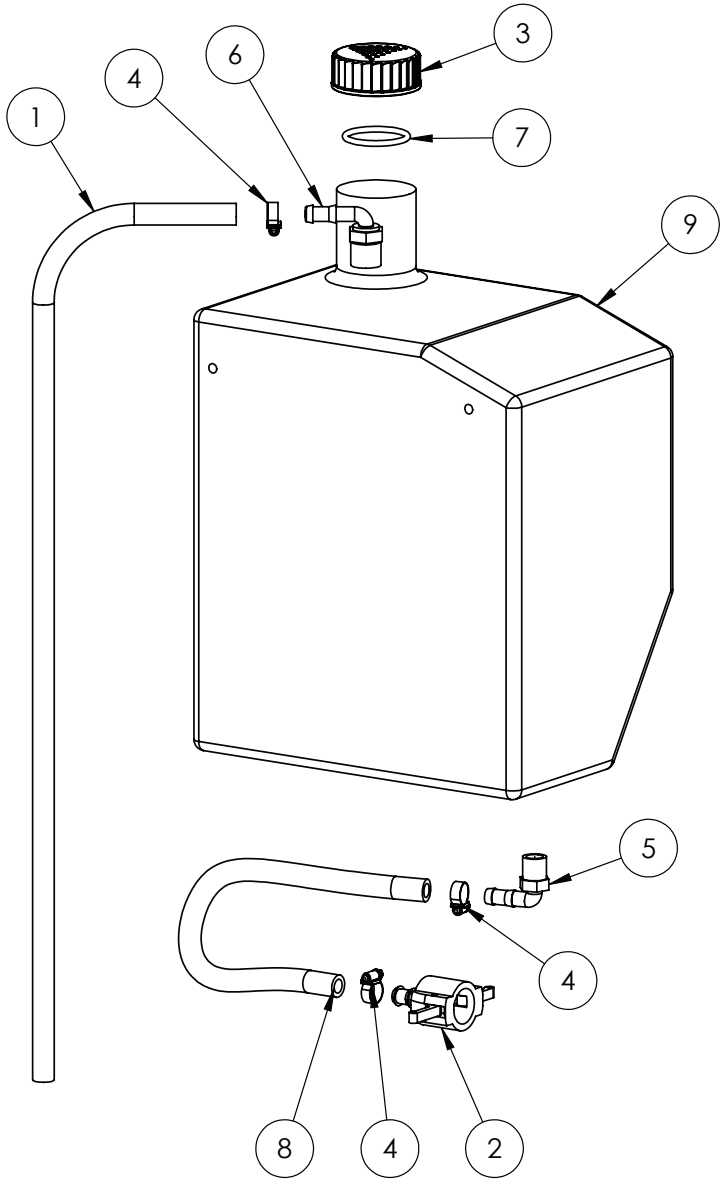

IF DESCRIPTION PREFIX IS ASSEMBLY DRAWING ONLY OR PRODUCTION DRAWING ONLY THE ITEM IS NOT FOR SALE			
ITEM	PART NUMBER	DESCRIPTION	QTY
1	GA2000276	BREATHER HOSE, HAND WASH TANK, GA2000211, CUT 1000mm	1
2	GA5077060	CAM LEVER, 3/4 FEMALE COUPLING X 1/2 HOSE BARB, BANJO	1
3	GA5075400	CAP, TANK, PLASTIC, LID, M65.5X8 THREAD, GOLDACRES LOGO	1
4	GA5000469	HOSE CLAMP, 1/2" SS 12-20/9W3	3
5	GA5077708	HOSE BARB, ELBOW, 90 DEGREE, 1/2 MALE THREAD X 1/2 HOSE, BANJO, HB050-90	1
6	GA5077710	HOSE BARB, ELBOW, 90 DEGREE, 3/4 MALE THREAD X 1/2 HOSE, BANJO	1
7	GA5009187	O RING, 60 OD, 50 ID X 5mm, SUITS EXACTA TANK CAP	1
8	GA2000635	PRESSURE HOSE, 12mm, CUT 500mm, GA2000211	1
9	GA8500027	TANK, HAND WASH, G6, MY20	1
GA4909619 GOLDACRES		ASSEMBLY DRAWING ONLY, HAND WASH TANK, S3	REV 00

06 - Front Mount 3PL

Stub Mounts, Front Mount 3PL

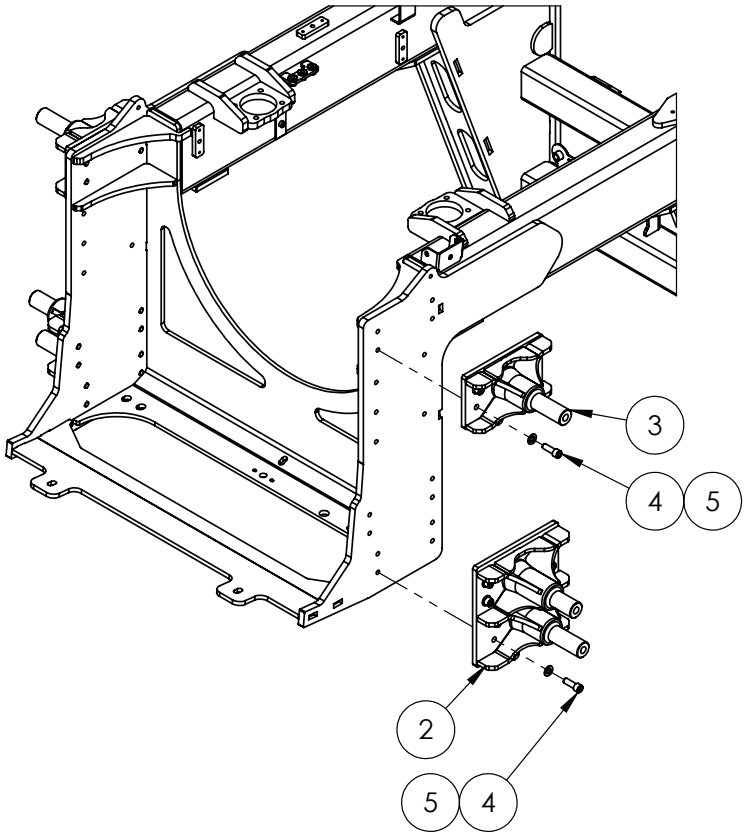

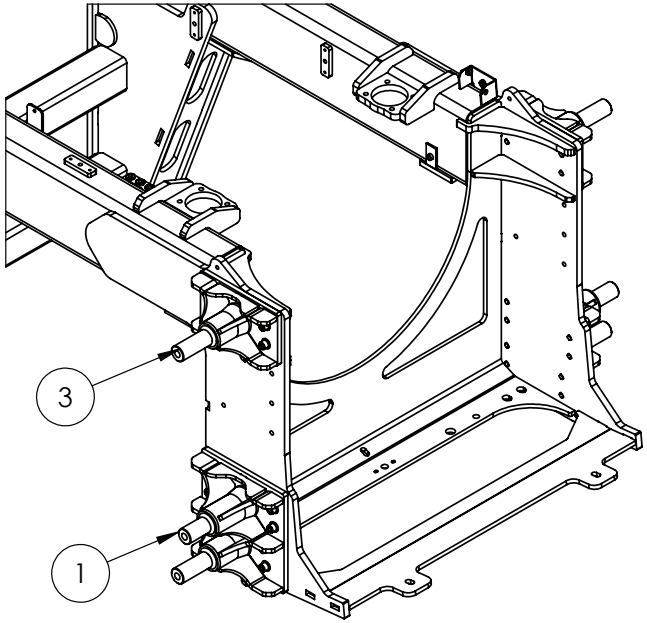

IF DESCRIPTION PREFIX IS ASSEMBLY DRAWING ONLY OR PRODUCTION DRAWING ONLY THE ITEM IS NOT FOR SALE			
ITEM	PART NUMBER	DESCRIPTION	QTY
1	GA4605093	LOWER COMBIND STUB MOUNT, RHS, RAM & LOWER CONTROL ARM, LF S3	1
2	GA4605092	LOWER COMBIND STUB MOUNT, LHS, RAM & LOWER CONTROL ARM, LF S3	1
3	GA4605037	PIVOT PIN STUB, TOP CONTROL ARM, CHASSIS MOUNT, FRONT MOUNT 3PL, LF S3	2
4	GA5000313	SHCS M12 X 35 GR12.9 ZP	24
5	GA5000577	WASHER M12 FLAT SS HD	24
GA7800418 GOLDACRES		ASSEMBLY DRAWING ONLY, FRONT MOUNT LIFTING MECHANISM, PIN INSTALLATION, LF S3	REV 00

Stands, Spray Pump & Pressure Filter Mounting, Front Mount 3PL

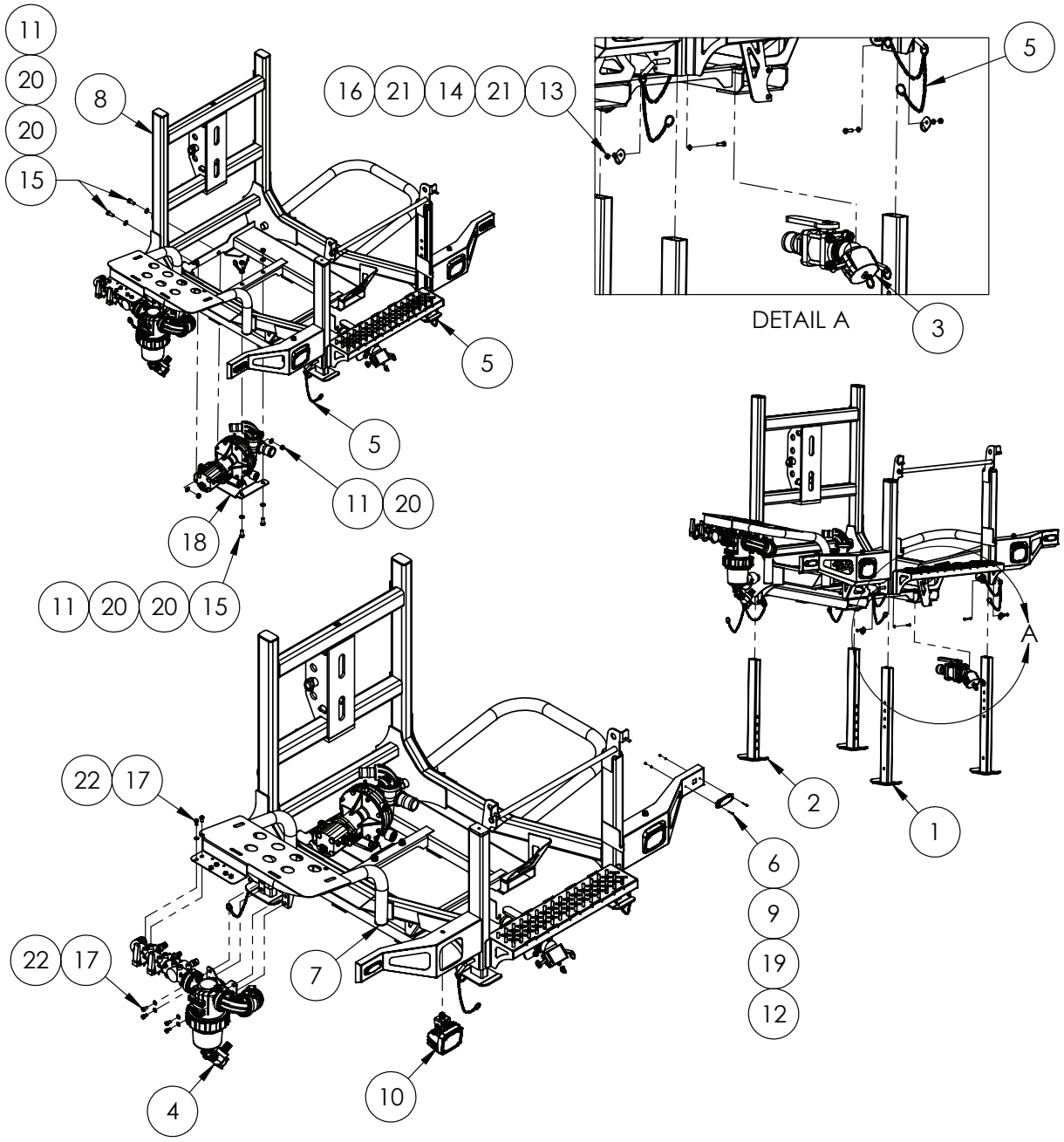

IF DESCRIPTION PREFIX IS ASSEMBLY DRAWING ONLY OR PRODUCTION DRAWING ONLY THE ITEM IS NOT FOR SALE			
ITEM	PART NUMBER	DESCRIPTION	QTY
1	GA4605120	ADJUSTABLE LEG, FRONT, 3PL FRONT MOUNT	2
2	GA4605105	ADJUSTIBLE LEG, REAR,3PL FRONT MOUNT	2
3	GA4909664	ASSEMBLY DRAWING, FILL & DRAIN POINT, 1500L 3PL FRONT MOUNT	1
4	GA4909651	ASSEMBLY DRAWING, PRESSURE FILTER & CONTROLLS ASSY, 1500 3PL FRONT MOUNT	1
5	GA4909684	ASSEMBLY DRAWING, PULL PIN WITH LINCHPIN, LANDING LEGS, 1500L 3PL FRONT MOUNT	4
6	GA0500006	BOLT PAN HEAD M3 X 20 ZP	4
7	GA5003925	END CAP, 45 mm ROUND, BLACK PLASTIC	2
8	GA4605103	FRAME, 1500L 3PL FRONT MOUNT	1
9	GA5025916	INDICATOR, TURN SIGNAL, FRONT, CLEAR LENS, 12-24V, 89X30X8	2
10	GA3001337	LIGHT, LED, FLOOD, ULTRA BEAM S SERIES, HELLA, 1GA 995 706-001	2
11	GA5012461	NUT M12 NYLOC ZP	4
12	GA5049465	NUT M3 NYLOC SS	4
13	GA5004429	NUT M6 NYLOC SS	4
14	GA4414275	PLATE, SIDE POD, CHAIN ATTACHMENT POINT, PRAIRIE SPECIAL, S2, MY23	4
15	GA5000305	SET SCREW M12 X 30 GR8.8 ZP	4
16	GA5004063	SET SCREW M6 X 20 SS A2-70	4
17	GA5011465	SET SCREW M8 X 16 GR8.8 ZP	10
18	GA4909652	SPRAY PUMP ASSY, 1500L 3PL FRONT MOUNT	1
19	GA5011351	WASHER 3mm FLAT SS	4
20	GA5000577	WASHER M12 FLAT SS HD	8
21	GA5004437	WASHER M6 FLAT SS HD	8
22	GA5003643	WASHER M8 FLAT SS HD	18
GA6000340 GOLDACRES		FRONT MOUNTED TANK, 1500L, 3PL	REV 00

Spray Pump Assembly, Front Mount 3PL

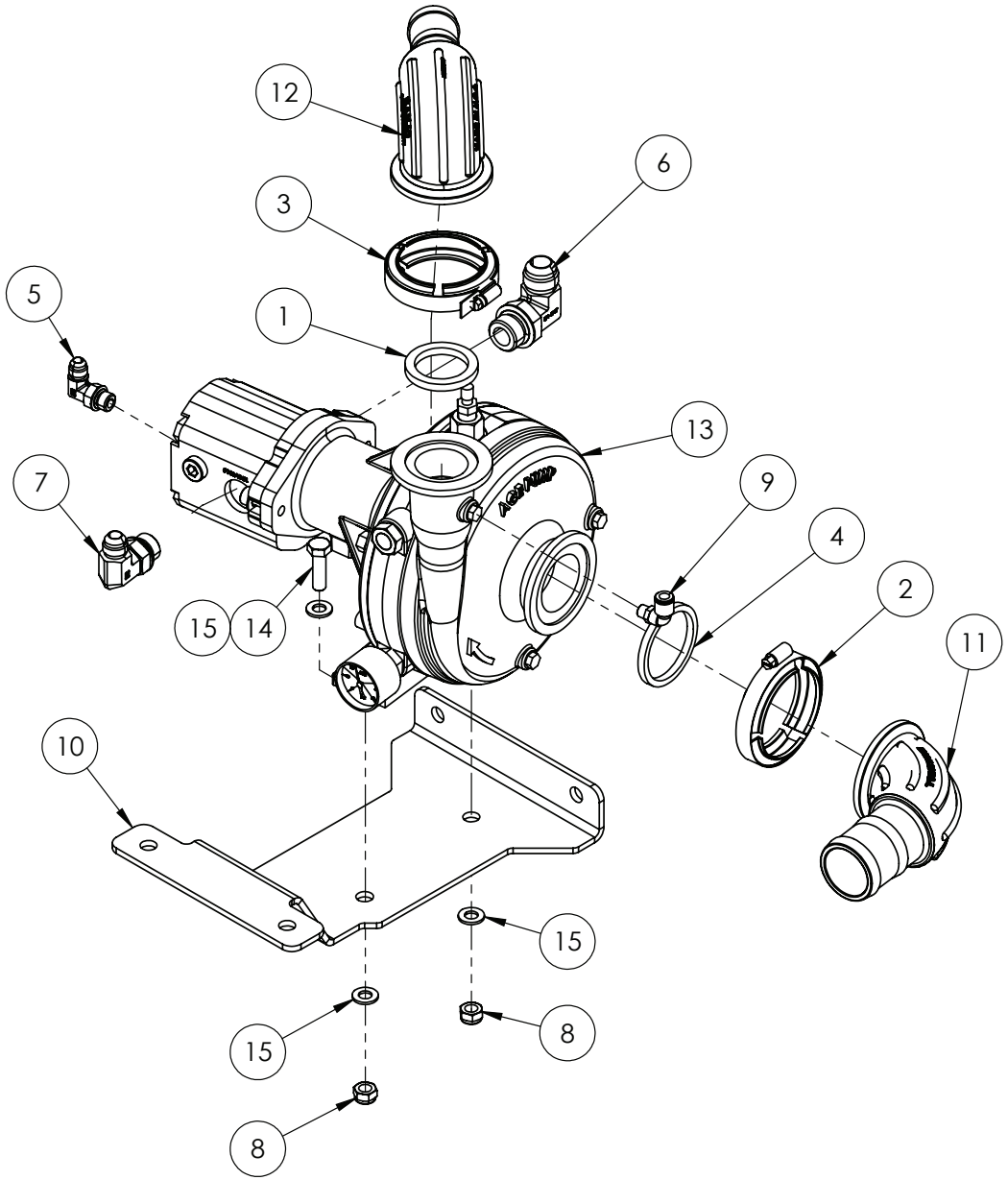

IF DESCRIPTION PREFIX IS ASSEMBLY DRAWING ONLY OR PRODUCTION DRAWING ONLY THE ITEM IS NOT FOR SALE			
ITEM	PART NUMBER	DESCRIPTION	QTY
1	GA5009335	1-1/2 EPDM GASKET	1
2	FC220	2 FULL PORT WORM SCREW CLAMP	1
3	FC200	200 SERIES STD SCREW CLAMP	1
4	M221G	GASKET 2" BANJO SUIT 220	1
5	GA3500716	HYDRAULIC ADAPTOR ELBOW, 9/16" UNO TO 9/16" JIC, 90 DEG, S91-0909	1
6	GA3500715	HYDRAULIC ADAPTOR, ELBOW, 1 1/16" UNO TO 1 1/16" JIC, 90 DEG, S91-1717	1
7	GA3500761	HYDRAULIC ADAPTOR, ELBOW, 7/8" UNO TO 3/4" JIC, 90 DEG, S91-1214	1
8	GA5051445	NUT M10 NYLOC SS	2
9	GA5018339	PNEUMATIC FITTING, ELBOW, 90°, 8MM PUSH TYPE FITTING X 1/8' MALE THREAD	1
10	GA4000614	PLATE, PUMP SUPPORT BRACKET, REMOVABLE, 3PL FRONT MOUNT	1
11	GA2000071	PLUMBING FITTING, SWEEP ELBOW, 90, 2" FLANGE TO 2" BARB, M220BRBSWP90, BANJO	1
12	GA2000401	PLUMBING FITTING, SWEPT ELBOW, 90, 1.5" HOSE BARB, M200 FLANGE, M200150BRBSWP90, BANJO	1
13	GA2000277	PUMP, CENTRIFUGAL, 644 LPM, OASIS RUN DRY SEAL, ACE	1
14	GA5006111	SET SCREW M10 X 35 GR8.8 ZP	2
15	GA5000117	WASHER M10 FLAT SS HD	4
GA4909652 GOLDACRES		SPRAY PUMP ASSY, 1500L 3PL FRONT MOUNT	REV 00

Fill & Drain Point Manifold Assembly, Front Mount 3PL

REPLACEMENT PARTS			
ITEM	PART NUMBER	DESCRIPTION	QTY
A	GA5078193	KIT, VALVE REPAIR, 1-1/4FP TO 2", V20200	-
B	GA5078191	STRAIGHT HANDLE 1-1/2 & 2 VLV, V20153	1

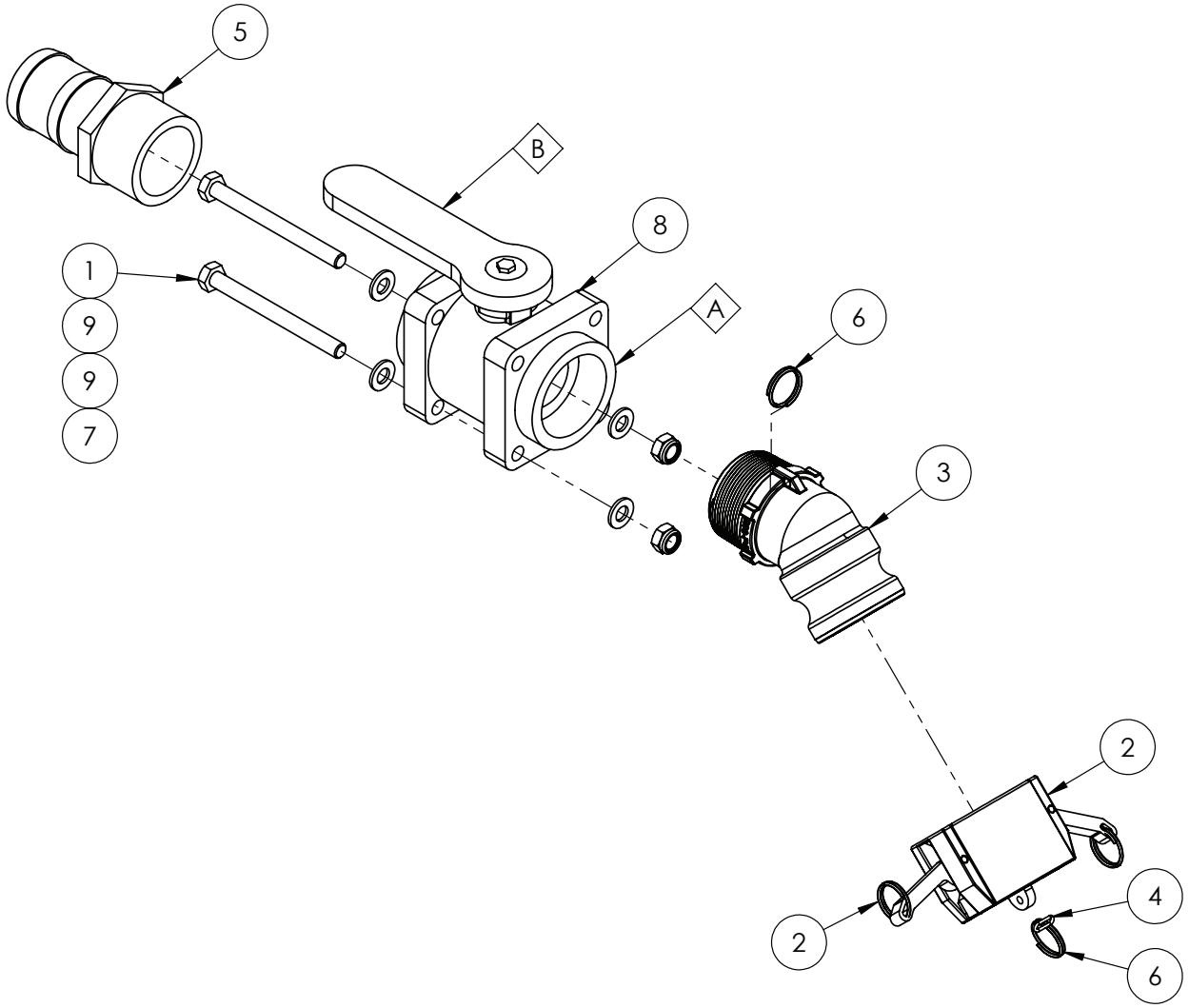

IF DESCRIPTION PREFIX IS ASSEMBLY DRAWING ONLY OR PRODUCTION DRAWING ONLY THE ITEM IS NOT FOR SALE			
ITEM	PART NUMBER	DESCRIPTION	QTY
1	GA5011141	BOLT M10 X 110 GR8.8 ZP	2
2	GA5076609	CAM LEVER, 2 FEMALE CAP, BANJO	1
3	GA5026352	CAM LEVER, 45 DEG ELBOW, 2 MALE COUPLER X 2 MALE THREAD, BANJO, 200F45	1
4	GA5001491	CHAIN 2mm X 20mm S/S 316	1
5	GA5077737	HOSE BARB, STRAIGHT, 2" MALE THREAD X 2" HOSE, BANJO, HB200	1
6	GA5002077	KEY RING, 25mm, SS	2
7	GA5051445	NUT M10 NYLOC SS	2
8	GA5078188	VALVE, BOLTED, 2" FEMALE THREAD INLET / OUTLET, LEVER HANDLE, BANJO, V200	1
9	GA5000117	WASHER M10 FLAT SS HD	4
GA4909664 GOLDACRES		ASSEMBLY DRAWING, FILL & DRAIN POINT, 1500L 3PL FRONT MOUNT	REV 00

Pressure Filter Assembly, Front Mount 3PL

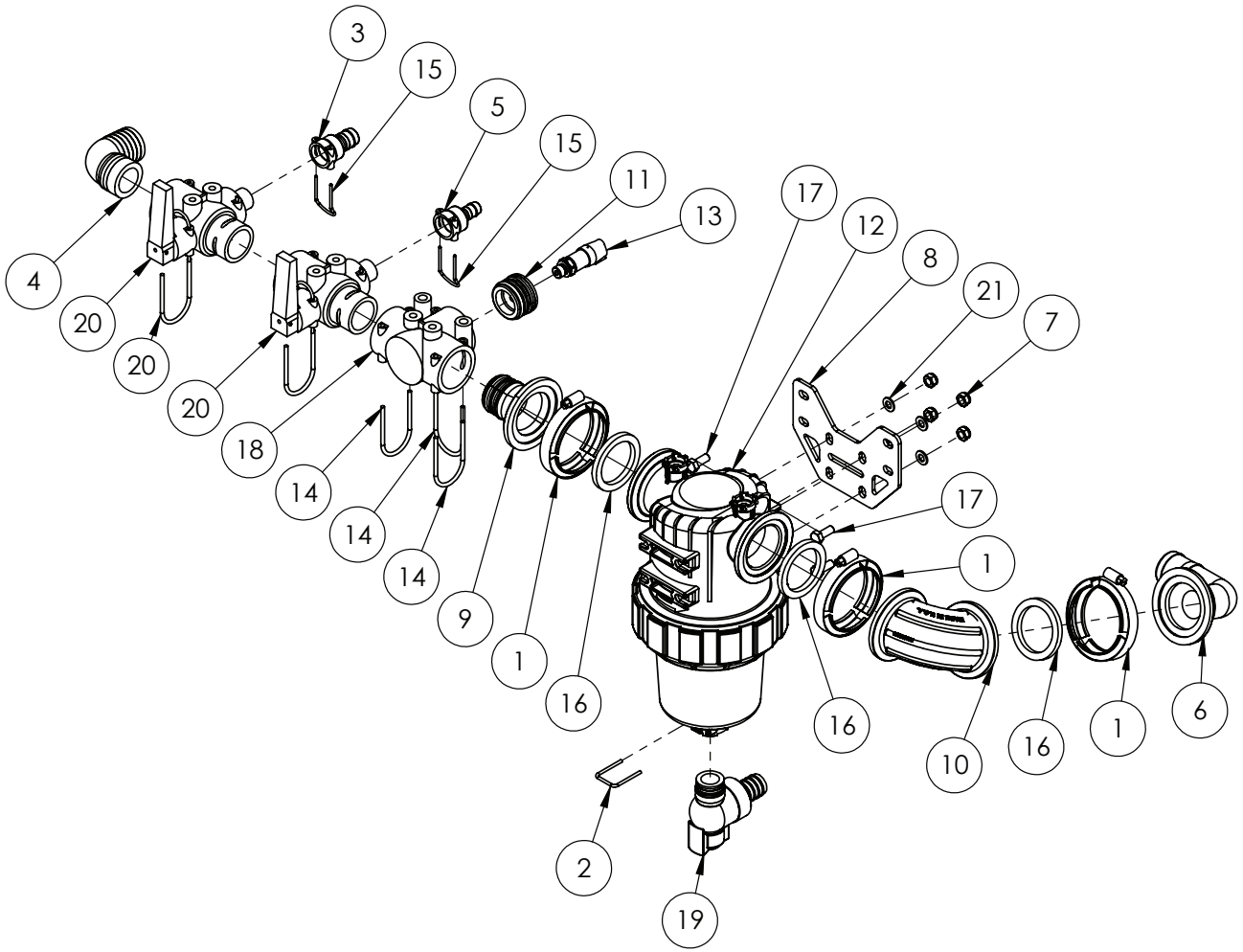

IF DESCRIPTION PREFIX IS ASSEMBLY DRAWING ONLY OR PRODUCTION DRAWING ONLY THE ITEM IS NOT FOR SALE			
ITEM	PART NUMBER	DESCRIPTION	QTY
1	FC220	2 FULL PORT WORM SCREW CLAMP	3
2	GA2000252	FORK D.3, DIST.29, SUIT PRESSURE FILTER GA2000563, ARAG, 010003	1
3	GA5065640	HOSE BARB, AS24 FEMALE X 20mm HOSE	1
4	GA5065625	HOSE BARB, ELBOW, 90 DEGREE, AS40 MALE X 39mm BARB, ALTEK	1
5	GA5065745	HOSE BARB, STRAIGHT, AS24 FEMALE X 15mm HOSE, ALTEK	1
6	GA5077856	HOSE BARB, 2" FP FLANGE, 1-1/2" HB, 90 DEGREE	1
7	GA5052590	NUT M8 NYLOC SS	4
8	GA4000649	PLATE, BRACKET, PRESSURE FILTER, 3PL FRONT TANK	1
9	GA5026347	PLUMBING ADAPTOR, AS40 MALE TO 2" FULL PORT BANJO FLANGE, ALTEK, 83157	1
10	GA2000344	PLUMBING FITTING, SWEPT ELBOW, 90, 2", M220 FLANGE, M220SWP90, BANJO	1
11	GA4582160	PLUMBING ADAPTOR, PLUG, AS40 MALE X G1/4" FEMALE THREAD, ALTEK	1
12	GA2000563	PRESSURE FILTER, 2", 100 MESH, ARAG SERIES 330	1
13	GA3000316	PRESSURE SENSOR TRANSDUCER, 0-25 BAR, 0.5-4.5V, IFM	1
14	GA5065690	RETAINING PIN, SAFETY CLIP, SUIT AS40 PLUMBING FITTINGS, ALTEK	3
15	GA5065695	RETAINING PIN, SUIT AS24 PLUMBING FITTINGS, ALTEK	2
16	GA5076615	SEAL, EPDM, SUIT 2" FLANGE FITTING, BANJO, 200G	3
17	GA5052595	SET SCREW M8 X 20 SS A2-70	4
18	GA5065560	T-PIECE 3XAS40 M8 INSERTS	1
19	GA2000564	VALVE, BALL, DRAIN FOR FILTER 330 SERIES	1
20	GA5065545	VALVE, QUICK FIT FLIP TOP, 2 WAY, AS40 MALE X AS24 FEMALE X AS40 FEMALE, ALTEK	2
21	GA5003643	WASHER M8 FLAT SS HD	4
GA4909651 GOLDACRES		ASSEMBLY DRAWING, PRESSURE FILTER & CONTROLLS ASSY, 1500 3PL FRONT MOUNT	REV 00

Linkage, Front Mount 3PL

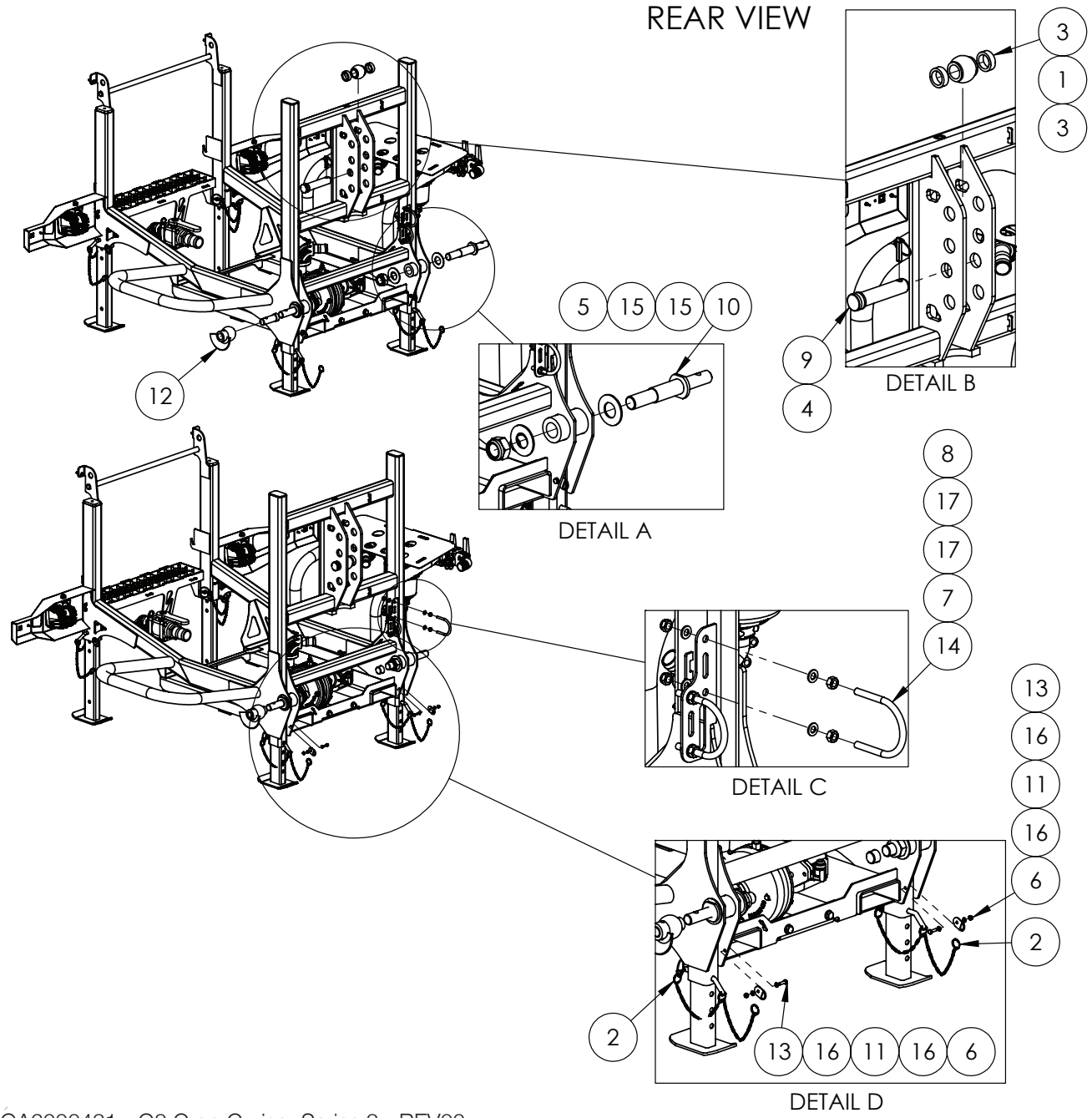

IF DESCRIPTION PREFIX IS ASSEMBLY DRAWING ONLY OR PRODUCTION DRAWING ONLY THE ITEM IS NOT FOR SALE			
ITEM	PART NUMBER	DESCRIPTION	QTY.
1	GA5026442	3PL TOP LINK BALL CLASS 3, WITH CLASS 3 PIN	1
2	GA4909684	ASSEMBLY DRAWING, PULL PIN WITH LINCHPIN, LANDING LEGS, 1500L 3PL FRONT MOUNT	2
3	GA4553287	COLLAR, TOP QUICK HITCH BALL RETAINER, 1500L 3PL FRONT MOUNT	2
4	GA5010905	LINCH PIN, 7/16" OD X 45 LONG	1
5	GA5002693	NUT M30 NYLOC ZP	2
6	GA5004429	NUT M6 NYLOC SS	2
7	GA5011499	NUT M8 HEX ZP	4
8	GA5004917	NUT M8 NYLOC ZP	4
9	GA5078736	PIN, TOPLINK, CAT3, 1.25" X 4.5", B2597_BARECO	1
10	GA4553276	PIN, LOWER, TRACTOR MOUNTING, CLASS 2/3 BALL, 3PL FRONT TANK	2
11	GA4414275	PLATE, SIDE POD, CHAIN ATTACHMENT POINT, PRAIRIE SPECIAL, S2, MY23	2
12	GA5026357	QUICK HITCH BALL, LOWER, CAT 3, CAT 2 HOLE	2
13	GA5004063	SET SCREW M6 X 20 SS A2-70	2
14	GA5018249	U BOLT M8 X 60 X 75 ROUND TOP ZP	2
15	GA5026581	WASHER 1 3/8" X 2 3/4" FLAT ZP	4
16	GA5004437	WASHER M6 FLAT SS HD	4
17	GA5003643	WASHER M8 FLAT SS HD	18
GA6000340 GOLDACRES		FRONT MOUNTED TANK, 1500L, 3PL	REV 00

Pull Pin Assembly, Adjustable Leg, Front Mount 3PL

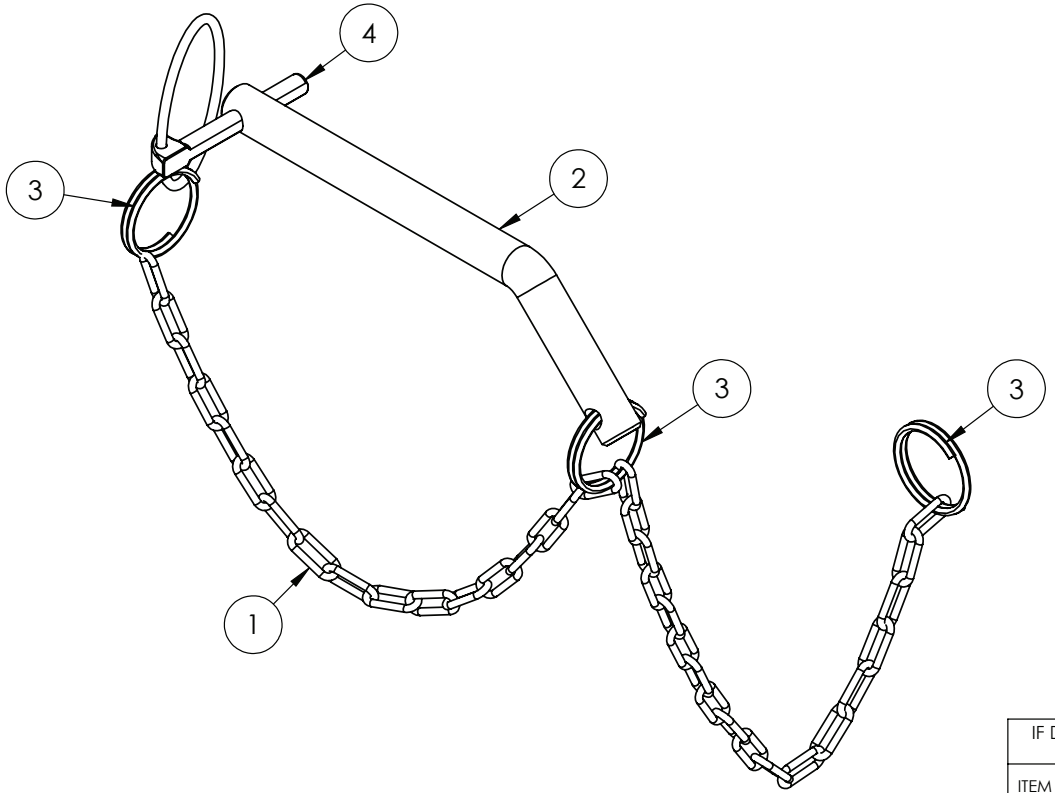

IF DESCRIPTION PREFIX IS ASSEMBLY DRAWING ONLY OR PRODUCTION DRAWING ONLY THE ITEM IS NOT FOR SALE			
ITEM	PART NUMBER	DESCRIPTION	QTY
1	GA5001491	CHAIN 2mm X 20mm S/S 316	35
2	SP-IH-009	HOPPER LATCH PIN	1
3	GA5002077	KEY RING, 25mm, SS	3
4	GA5074350	LINCH PIN, 7/16" OD X 45 LONG	1
GA4909684 GOLDACRES		ASSEMBLY DRAWING, PULL PIN WITH LYNCH PIN, LANDINGF LEGS, 1500L 3PL FRONT MOUNT	REV 00

Tank & Oversize Sign Mounting, Front Mount 3PL, (From S/N 204148)

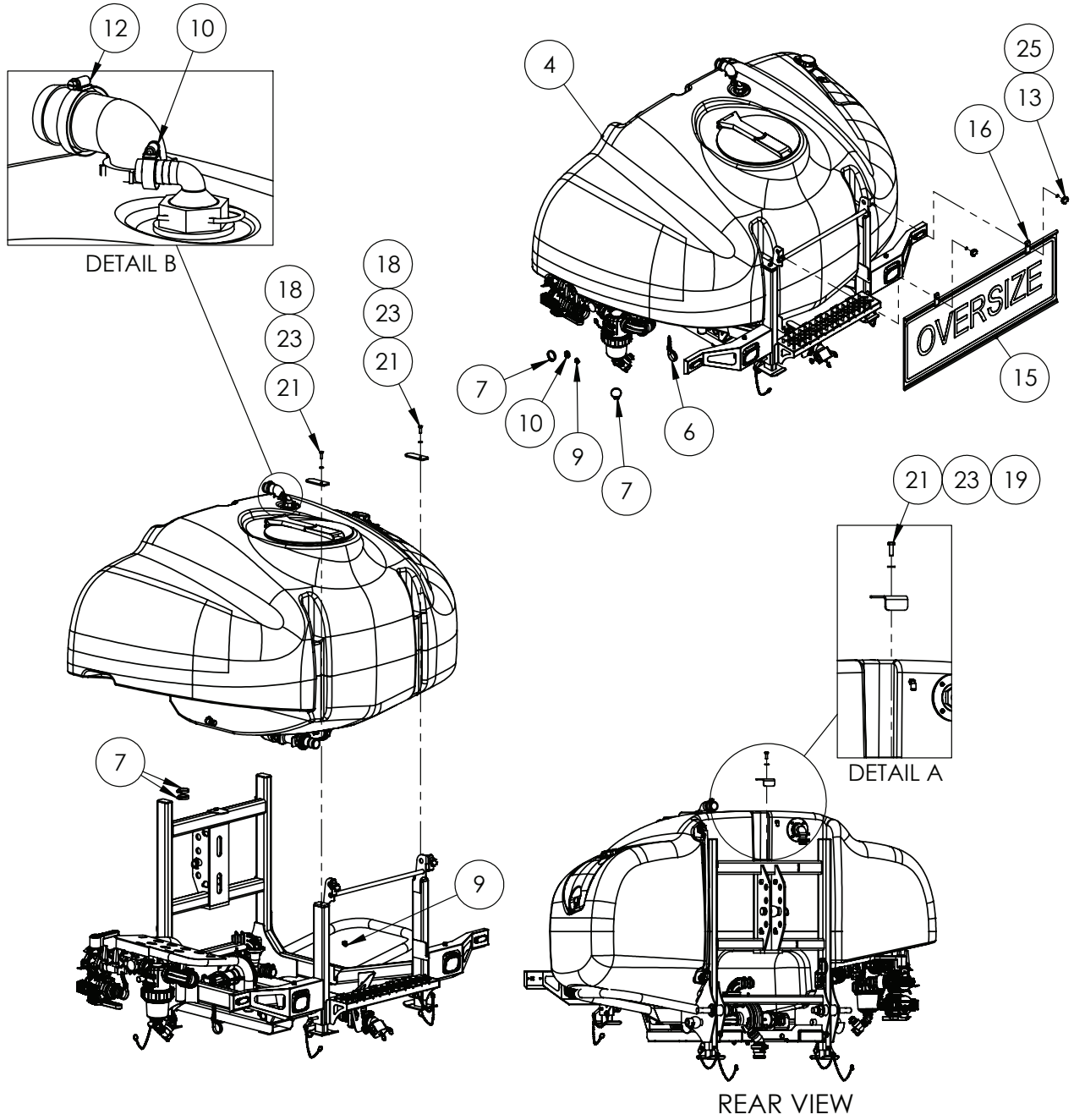

IF DESCRIPTION PREFIX IS ASSEMBLY DRAWING ONLY OR PRODUCTION DRAWING ONLY THE ITEM IS NOT FOR SALE			
ITEM	PART NUMBER	DESCRIPTION	QTY
1	GA4909754	ASSEMBLY DRAWING ONLY, OVER FLOW POINT OUTLET, 1500L 3PL FRONT MOUNT	1
2	GA4909748	ASSEMBLY DRAWING, PRESSURE HOSE CONNECTOR, DM BALL VALVE, 1500L 3PL FRONT MOUNT	1
3	GA4909749	ASSEMBLY DRAWING, RETURN HOSE CONNECTOR, DM BALL VALVE, 1500L 3PL FRONT MOUNT	1
4	GA4909622	ASSEMBLY DRAWING, TANK ASSY, 1500L 3PL FRONT MOUNT	1
5	GA5001491	CHAIN 2mm X 20mm S/S 316	6
6	GA5026743	CLAMP P, 54mm RUBBER LINED	3
7	GA5002873	HOSE CLAMP, 1 1/2" SS (32-50/12W)	16
8	GA5001681	HOSE CLAMP, 1" SS (20-32/12W)	2
9	GA5000469	HOSE CLAMP, 1/2" SS 12-20/9W3	2
10	GA5000999	HOSE CLAMP, 3/4" SS (16-27/12W)	2
11	GA5026741	HOSE BARB, ELBOW, 90 DEGREE, 1,1/2" X 1,1/2" BARB, HYPRO	1
12	GA5003325	HOSE CLAMP 2" SS (40-60/12W)	10
13	GA5069875	KNOB-STAR GRIP M8 X 40 DIA	2
14	GA5004429	NUT M6 NYLOC SS	5
15	GA5009613	OVERSIZE SIGN, YELLOW, REFLECTIVE WITH FOLDED EDGES	1
16	GA4000255	PLATE, OVERSIZE SIGN CLAMP	2
17	GA4414275	PLATE, SIDE POD, CHAIN ATTACHMENT POINT, PRAIRIE SPECIAL, S2, MY23	5
18	GA4000720	PLATE, TANK CLAMP, FRONT, 1500L 3PL FRONT MOUNT	2
19	GA4000719	PLATE, TANK CLAMP, REAR, 1500L 3PL FRONT MOUNT	1
20	GA5026742	QUICK LINK, CHAIN LINK, 4 X 40, 316	6
21	GA5065455	SET SCREW M10 X 30 GR8.8 ZP	3
22	GA5011395	SET SCREW M6 X 16 SS A2-70	5
23	GA5000117	WASHER M10 FLAT SS HD	3
24	GA5004437	WASHER M6 FLAT SS HD	10
25	GA5004919	WASHER M8 SPRING SS	2
GA6000340 GOLDACRES		FRONT MOUNTED TANK, 1500L, 3PL	REV 01

Overflow, Front Mount 3PL

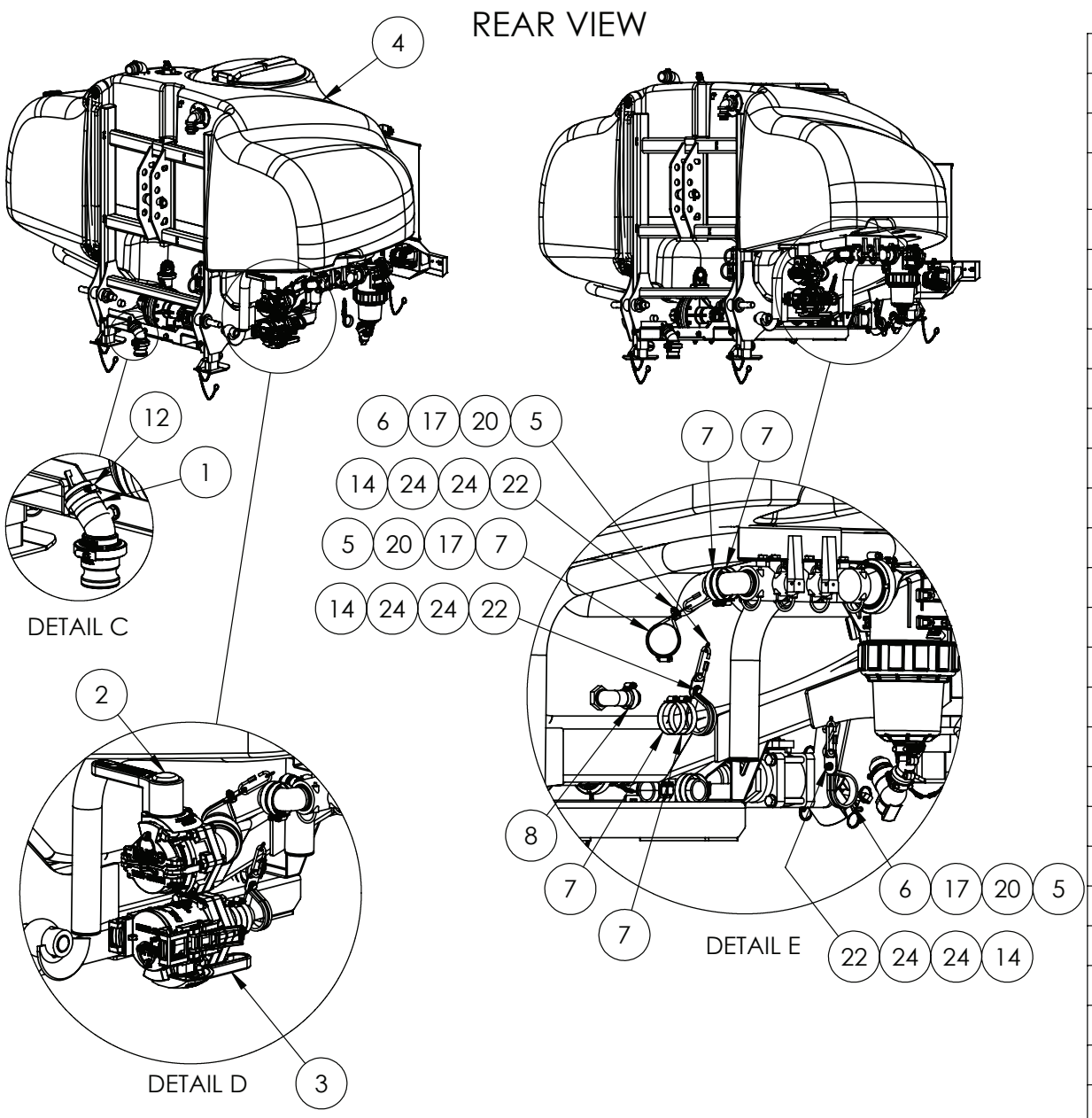

IF DESCRIPTION PREFIX IS ASSEMBLY DRAWING ONLY OR PRODUCTION DRAWING ONLY THE ITEM IS NOT FOR SALE			
ITEM	PART NUMBER	DESCRIPTION	QTY
1	GA4909754	ASSEMBLY DRAWING ONLY, OVER FLOW POINT OUTLET, 1500L 3PL FRONT MOUNT	1
2	GA4909748	ASSEMBLY DRAWING, PRESSURE HOSE CONNECTOR, DM BALL VALVE, 1500L 3PL FRONT MOUNT	1
3	GA4909749	ASSEMBLY DRAWING, RETURN HOSE CONNECTOR, DM BALL VALVE, 1500L 3PL FRONT MOUNT	1
4	GA4909622	ASSEMBLY DRAWING, TANK ASSY, 1500L 3PL FRONT MOUNT	1
5	GA5001491	CHAIN 2mm X 20mm S/S 316	6
6	GA5026743	CLAMP P, 54mm RUBBER LINED	3
7	GA5002873	HOSE CLAMP, 1 1/2" SS (32-50/12W)	16
8	GA5001681	HOSE CLAMP, 1" SS (20-32/12W)	2
9	GA5000469	HOSE CLAMP, 1/2" SS 12-20/9W3	2
10	GA5000999	HOSE CLAMP, 3/4" SS (16-27/12W)	2
11	GA5026741	HOSE BARB, ELBOW, 90 DEGREE, 1,1/2" X 1,1/2" BARB, HYPRO	1
12	GA5003325	HOSE CLAMP 2" SS (40-60/12W)	10
13	GA5069875	KNOB-STAR GRIP M8 X 40 DIA	2
14	GA5004429	NUT M6 NYLOC SS	5
15	GA5009613	OVERSIZE SIGN, YELLOW, REFLECTIVE WITH FOLDED EDGES	1
16	GA4000255	PLATE, OVERSIZE SIGN CLAMP	2
17	GA4414275	PLATE, SIDE POD, CHAIN ATTACHMENT POINT, PRAIRIE SPECIAL, S2, MY23	5
18	GA4000720	PLATE, TANK CLAMP, FRONT, 1500L 3PL FRONT MOUNT	2
19	GA4000719	PLATE, TANK CLAMP, REAR, 1500L 3PL FRONT MOUNT	1
20	GA5026742	QUICK LINK, CHAIN LINK, 4 X 40, 316	6
21	GA5065455	SET SCREW M10 X 30 GR8.8 ZP	3
22	GA5011395	SET SCREW M6 X 16 SS A2-70	5
23	GA5000117	WASHER M10 FLAT SS HD	3
24	GA5004437	WASHER M6 FLAT SS HD	10
25	GA5004919	WASHER M8 SPRING SS	2
GA6000340 GOLDACRES		FRONT MOUNTED TANK, 1500L, 3PL	REV 01

Pressure Connector, Camlock Assy, Front Mount 3PL, (Up to S/N 204147)

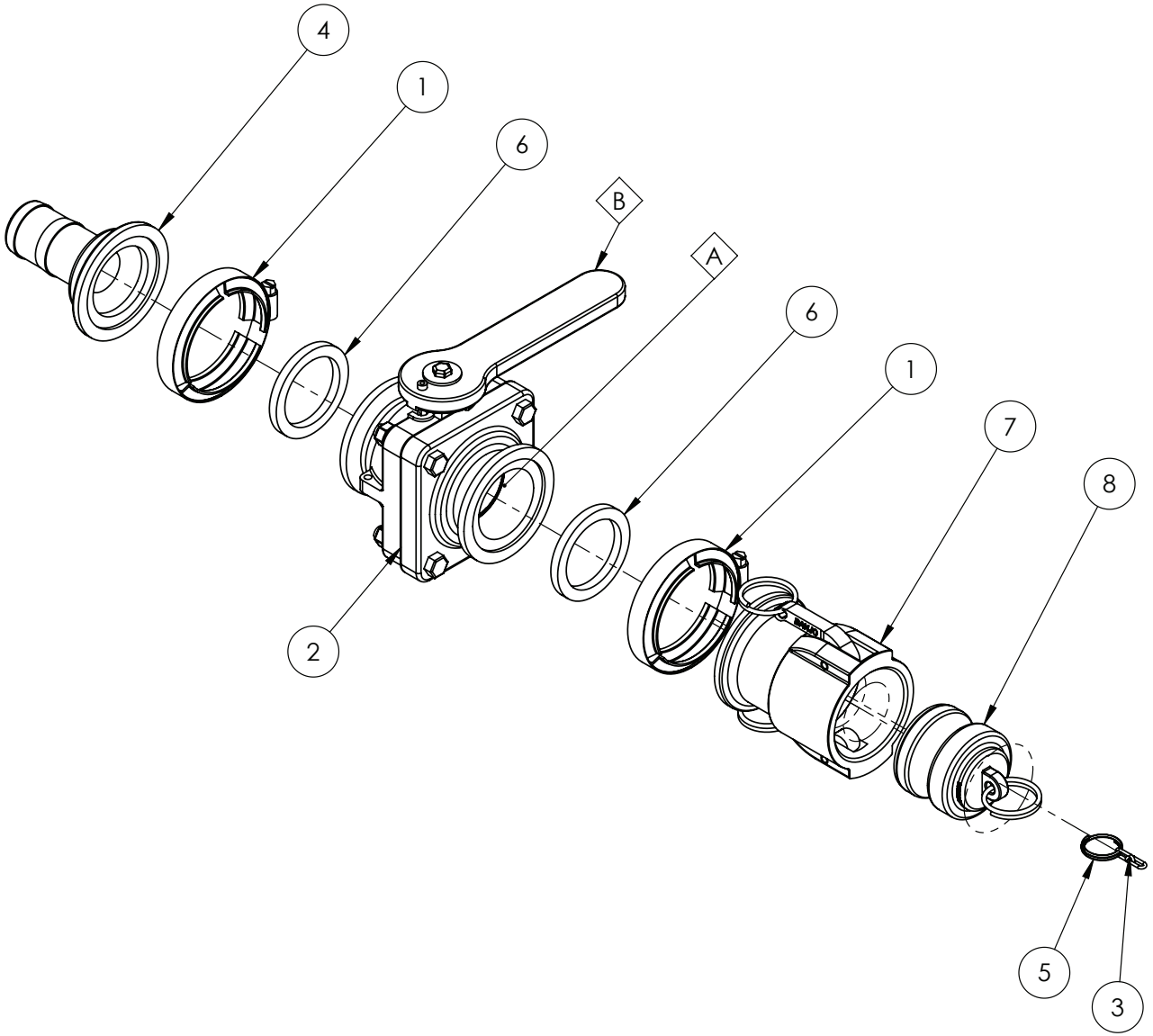

REPLACEMENT PARTS			
ITEM	PART NUMBER	DESCRIPTION	QTY
A	GA5026700	KIT, VALVE REPAIR, 2", FULL PORT, SUIT, GA5077908	-
B	GA2000275	HANDLE, STUBBY YELLOW BANJO BALL VALVE, SUITS GA5077908, GA5078205, VS25153	-

IF DESCRIPTION PREFIX IS ASSEMBLY DRAWING ONLY OR PRODUCTION DRAWING ONLY THE ITEM IS NOT FOR SALE			
ITEM	PART NUMBER	DESCRIPTION	QTY
1	FC220	2 FULL PORT WORM SCREW CLAMP	2
2	GA5077908	BALL VALVE, 2" FULL PORT , 4 BOLT FLANGED, SHORT, BANJO	1
3	GA5001491	CHAIN 2mm X 20mm S/S 316	1
4	GA2000047	HOSE BARB, FLANGE, STRAIGHT, 2" FLANGE X 1 1/2" HOSE, BANJO	1
5	GA5002077	KEY RING, 25mm, SS	2
6	GA5076615	SEAL, EPDM, SUIT 2" FLANGE FITTING, BANJO, 200G	2
7	GA5026726	2" FEMALE ADAPTER X 2" MANIFOLD	1
8	GA5076619	CAM LEVER, 2 MALE PLUG, BANJO, 200PL	1
GA4909686 GOLDACRES		ASSEMBLY DRAWING, PRESSURE HOSE CONNECTOR, CAM LOCK, 2", 1500L 3PL FRONT MOUNT	REV 01

Return Connector, Camlock Assy, Front Mount 3PL, (Up to S/N 204147)

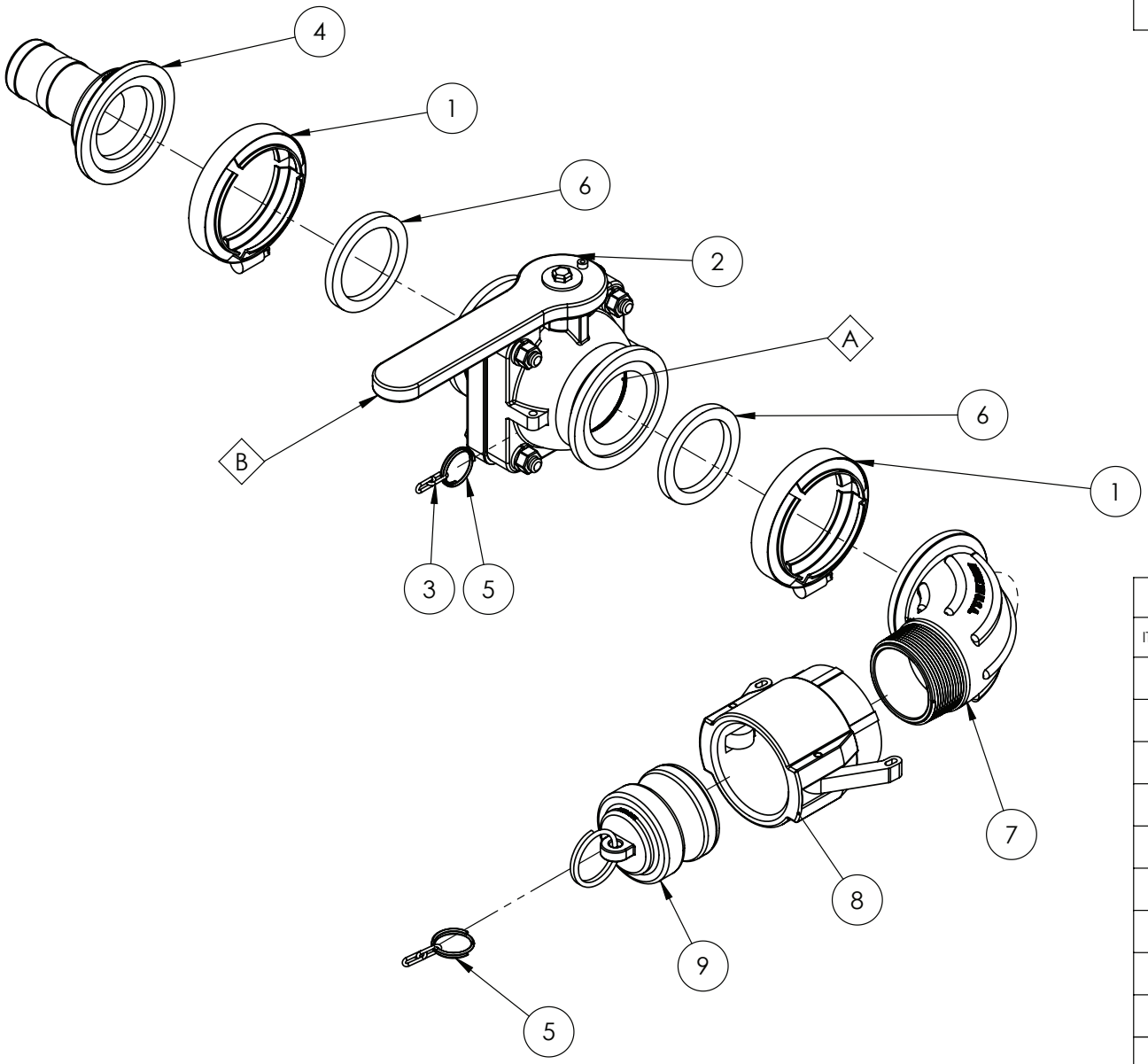

REPLACEMENT PARTS			
ITEM	PART NUMBER	DESCRIPTION	QTY
A	GA5026700	KIT, VALVE REPAIR, 2", FULL PORT, SUIT, GA5077908	-
B	GA2000275	HANDLE, STUBBY YELLOW BANJO BALL VALVE, SUITS GA5077908, GA5078205, VS25153	1

IF DESCRIPTION PREFIX IS ASSEMBLY DRAWING ONLY OR PRODUCTION DRAWING ONLY THE ITEM IS NOT FOR SALE			
ITEM	PART NUMBER	DESCRIPTION	QTY
1	FC220	2 FULL PORT WORM SCREW CLAMP	2
2	GA5077908	BALL VALVE, 2" FULL PORT , 4 BOLT FLANGED, SHORT, BANJO	1
3	GA5001491	CHAIN 2mm X 20mm S/S 316	1
4	GA2000047	HOSE BARB, FLANGE, STRAIGHT, 2" FLANGE X 1 1/2" HOSE, BANJO	1
5	GA5002077	KEY RING, 25mm, SS	2
6	GA5076615	SEAL, EPDM, SUIT 2" FLANGE FITTING, BANJO, 200G	2
7	GA5026717	PLUMBING FITTING, SWEPT ELBOW, 90, 2", M220 FLANGE TO 2" MALE NPT, M220MPTSWP90, BANJO	1
8	GA5076611	CAM LEVER COUPLING - 2" FEMALE COUPLER X 2" FEMALE THREAD	1
9	GA5076619	CAM LEVER, 2 MALE PLUG, BANJO, 200PL	1
GA4909690 GOLDACRES		ASSEMBLY DRAWING, RETURN HOSE CONNECTOR, CAM LOCK, 2", 1500L 3PL FRONT MOUNT	REV 01

DM Valve Assembly, Pressure, Front Mount 3PL, (From S/N 204148)

REPLACEMENT PARTS			
ITEM	PART NUMBER	DESCRIPTION	QTY
A	GA5026745	HANDLE, MALE, VALVE, BANJO, DRY MATE, SUIT, GA5026723	1
B	GA5026747	DUST CAP, BALL VALVE, DRY MATE, BANJO, SUIT, GA5026723	1
C	GA5026748	KIT, REPAIR, BANJO, DRY MATE, SUIT, GA5026723 & GA5026724	-

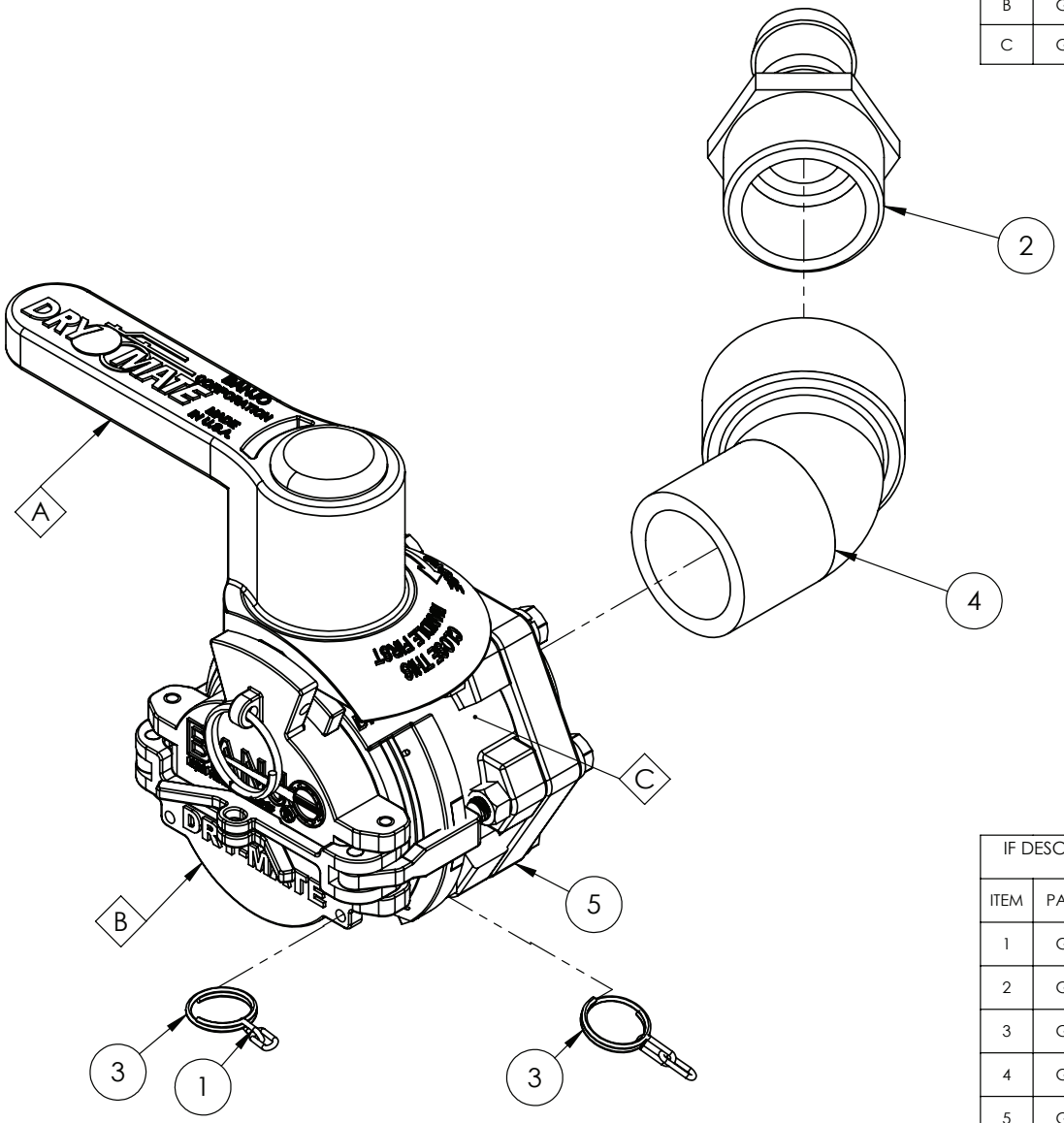

IF DESCRIPTION PREFIX IS ASSEMBLY DRAWING ONLY OR PRODUCTION DRAWING ONLY THE ITEM IS NOT FOR SALE			
ITEM	PART NUMBER	DESCRIPTION	QTY.
1	GA5001491	CHAIN 2mm X 20mm S/S 316	1
2	GA5077739	HOSE BARB, STRAIGHT, 2" MALE THREAD X 1 1/2" HOSE, BANJO, HB200-150	1
3	GA5002077	KEY RING, 25mm, SS	2
4	GA5078141	STREET ELBOW, 45 DEGREE, 2 MALE THREAD X 2 FEMALE THREAD, BANJO	1
5	GA5026723	VALVE, DRY MATE, MALE, 2" FEMALE THREAD, LEVER HANDLE, BANJO, DM220A	1
GA4909748 GOLDACRES		ASSEMBLY DRAWING, PRESSURE HOSE CONNECTOR, DM BALL VALVE, 1500L 3PL FRONT MOUNT	REV 00

DM Valve Assembly, Return, Front Mount 3PL, (From S/N 204148)

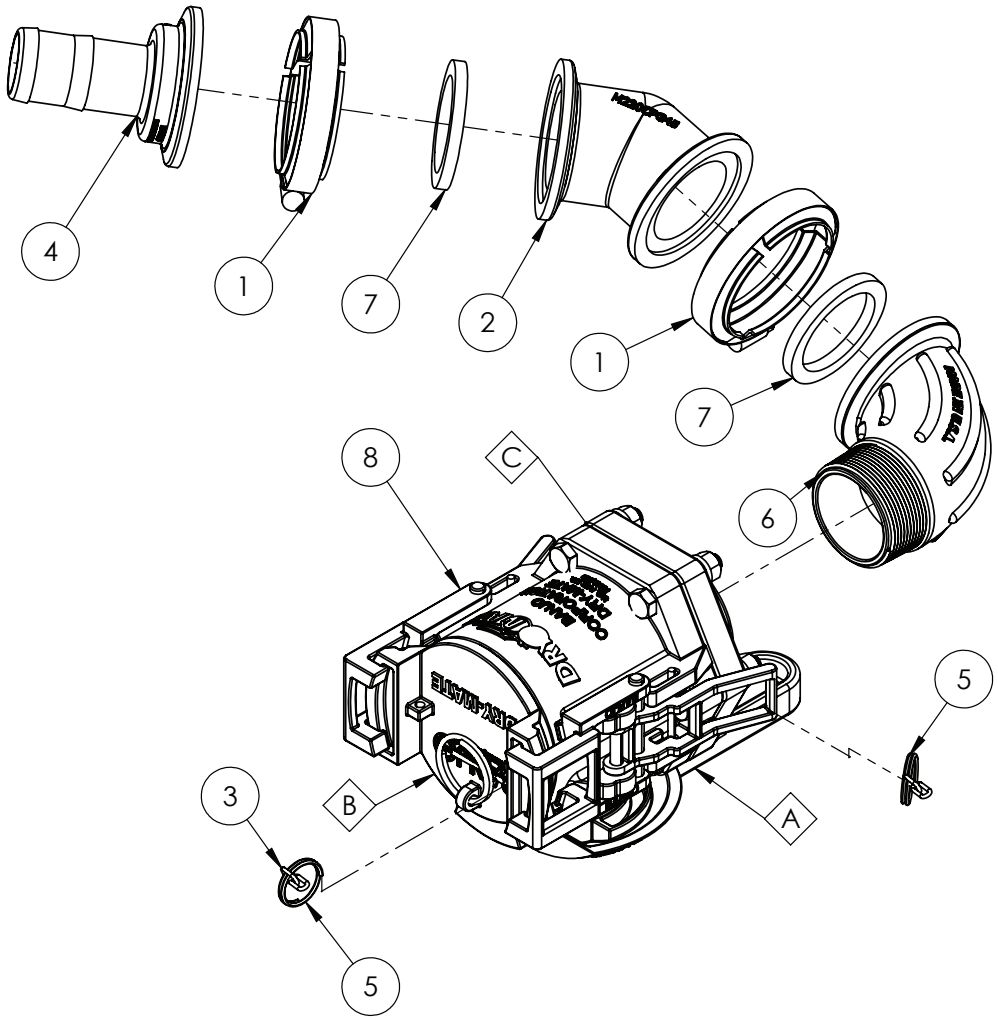

REPLACEMENT PARTS			
ITEM	PART NUMBER	DESCRIPTION	QTY
A	GA5026746	HANDLE, FEMALE, VALVE, BANJO, DRY MATE, SUIT, GA5026724	1
B	GA5026750	DUST PLUG, BALL VALVE, DRY MATE, BANJO, SUIT, GA5026724	1
C	GA5026748	KIT, REPAIR, BANJO, DRY MATE, SUIT, GA5026723 & GA5026724	-

IF DESCRIPTION PREFIX IS ASSEMBLY DRAWING ONLY OR PRODUCTION DRAWING ONLY THE ITEM IS NOT FOR SALE			
ITEM	PART NUMBER	DESCRIPTION	QTY
1	FC220	2 FULL PORT WORM SCREW CLAMP	2
2	GA5077862	2"FP X 2"FP MNFLD CPLG-45DEGRE	1
3	GA5001491	CHAIN 2mm X 20mm S/S 316	1
4	GA2000047	HOSE BARB, FLANGE, STRAIGHT, 2" FLANGE X 1 1/2" HOSE, BANJO	1
5	GA5002077	KEY RING, 25mm, SS	2
6	GA5026717	PLUMBING FITTING, SWEPT ELBOW, 90, 2", M220 FLANGE TO 2" MALE NPT, M220MPTSWP90, BANJO	1
7	GA5076615	SEAL, EPDM, SUIT 2" FLANGE FITTING, BANJO, 200G	2
8	GA5026724	VALVE, DRY MATE, FEMALE, 2" FEMALE THREAD, LEVER HANDLE, BANJO, DM220D	1
GA4909753 GOLDACRES		ASSEMBLY DRAWING, RETURN HOSE CONNECTOR, DM BALL VALVE, REWORK, 1500L 3PL FRONT MOUNT	REV 00

Overflow Outlet Assembly, Front Mount 3PL

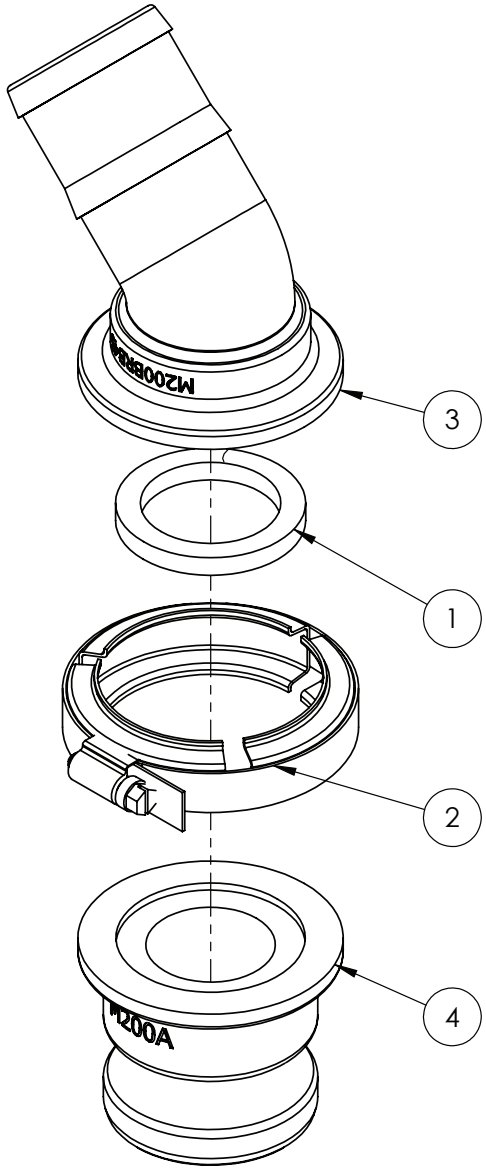

IF DESCRIPTION PREFIX IS ASSEMBLY DRAWING ONLY OR PRODUCTION DRAWING ONLY THE ITEM IS NOT FOR SALE			
ITEM	PART NUMBER	DESCRIPTION	QTY
1	GA5009335	1-1/2 EPDM GASKET	1
2	FC200	200 SERIES STD SCREW CLAMP	1
3	GA2000433	HOSE BARB, ELBOW, 45 DEGREE, 2 FLANGE X 2 HOSE, BANJO, M200BRB45	1
4	GA5077836	PLUMBING FITTING, 2" FLANGE X 2" MALE CAMLOCK, BANJO, M200A	1
GA4909754 GOLDACRES		ASSEMBLY DRAWING ONLY, OVER FLOW POINT OUTLET, 1500L 3PL FRONT MOUNT	REV 00

Hose Routing Bracket Mounting, Front Mount 3PL, (From S/N 204148)

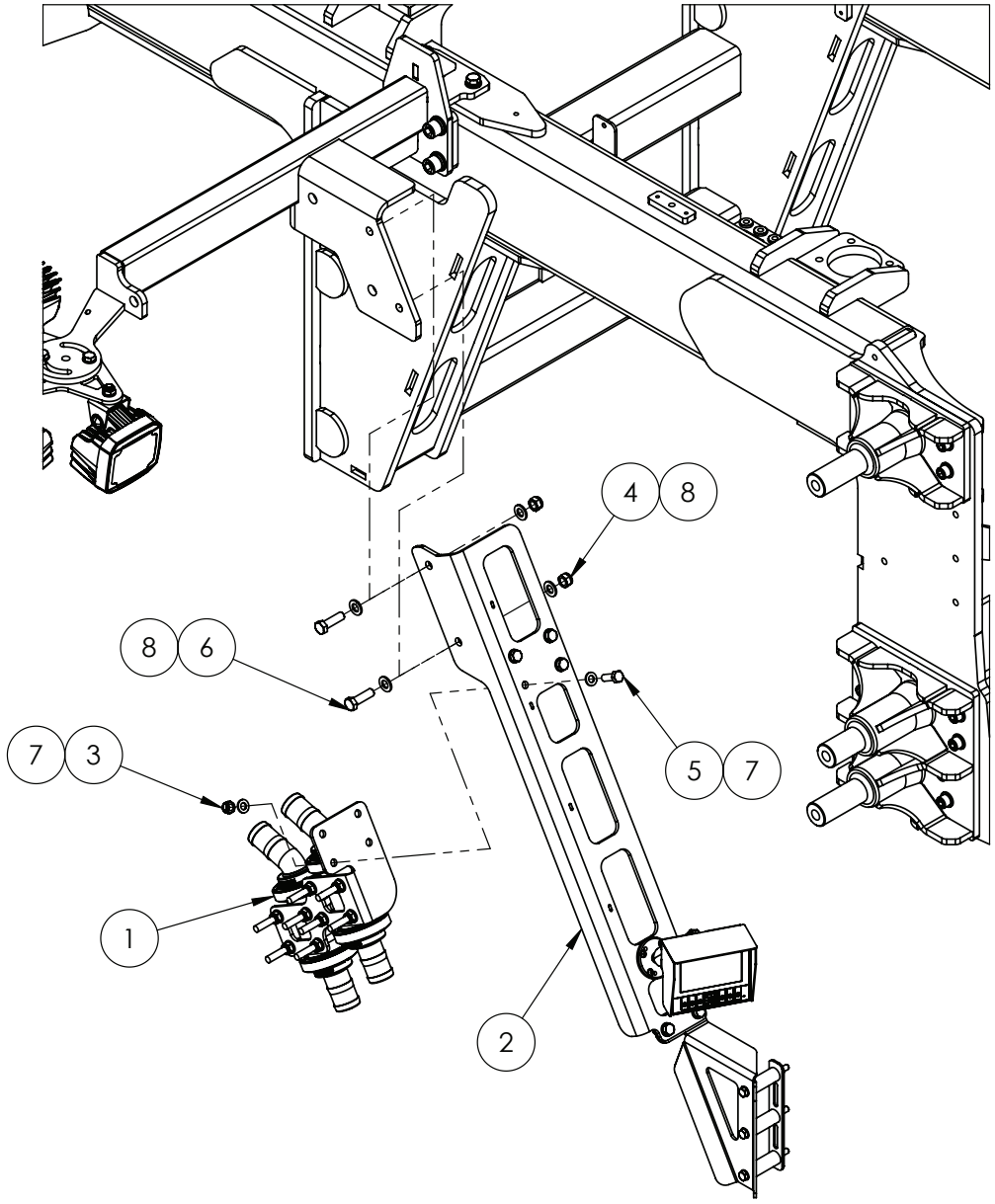

IF DESCRIPTION PREFIX IS ASSEMBLY DRAWING ONLY OR PRODUCTION DRAWING ONLY THE ITEM IS NOT FOR SALE			
ITEM	PART NUMBER	DESCRIPTION	QTY
1	GA4909751	CHASSIS MANIFOLD, DM BALL VALVES, QUICK HITCH LINKAGE, LF S3	1
2	GA6101996	FRONT MOUNT, HOSE ROUTING BRACKETS, G8S3	1
3	GA5051445	NUT M10 NYLOC SS	4
4	GA5012461	NUT M12 NYLOC ZP	2
5	GA5065455	SET SCREW M10 X 30 GR8.8 ZP	4
6	GA5000319	SET SCREW M12 X 40 GR8.8 ZP	2
7	GA5000117	WASHER M10 FLAT SS HD	8
8	GA5000577	WASHER M12 FLAT SS HD	4
GA7800469 GOLDACRES		ASSEMBLY DRAWING ONLY, FRONT MOUNT, HOSE ROUTING BRACKETS, G8S3	REV 02

Manifold, DM Ball Valve Assembly, Front Mount 3PL, (From S/N 204148)

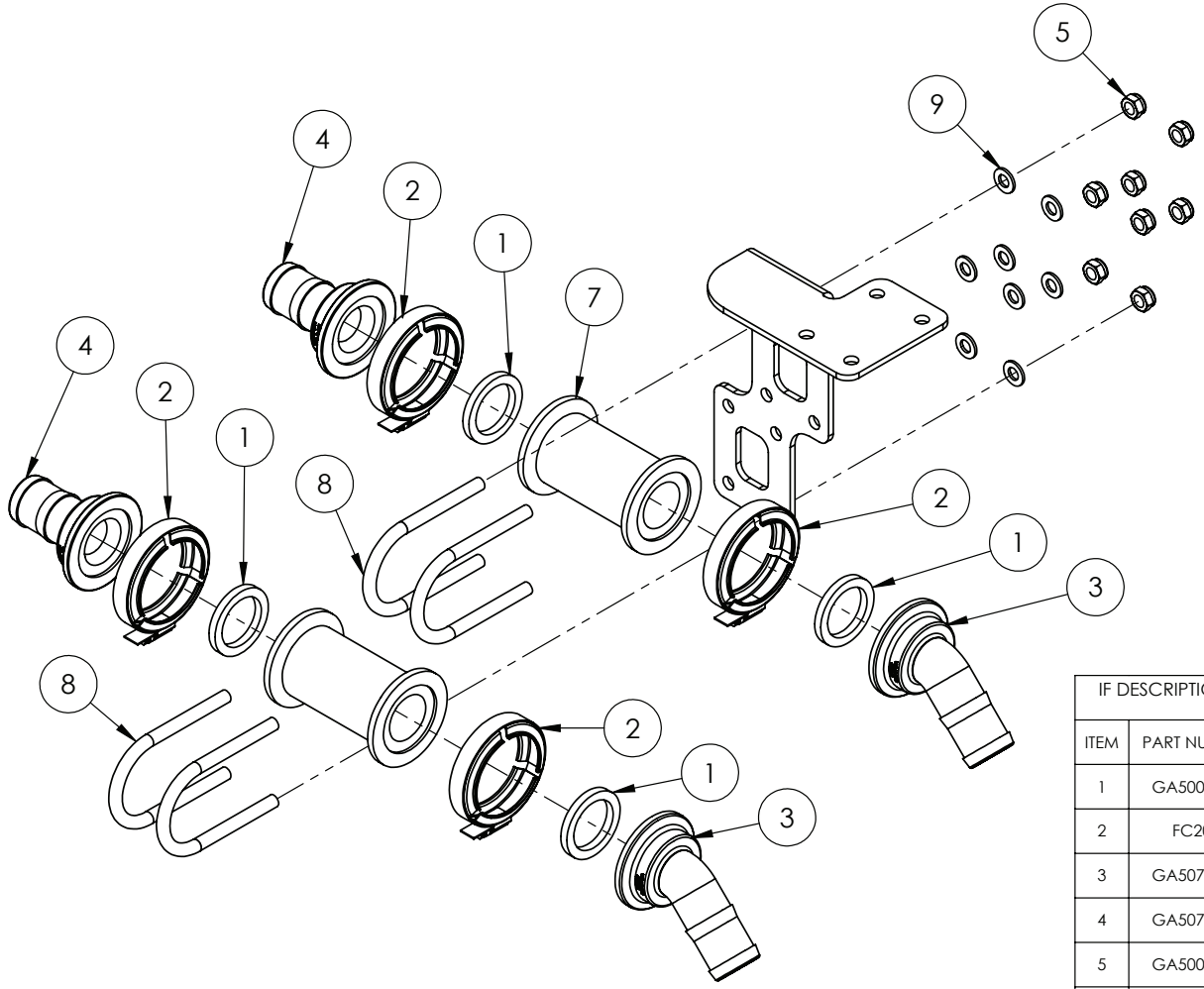

IF DESCRIPTION PREFIX IS ASSEMBLY DRAWING ONLY OR PRODUCTION DRAWING ONLY THE ITEM IS NOT FOR SALE			
ITEM	PART NUMBER	DESCRIPTION	QTY
1	GA5009335	1-1/2 EPDM GASKET	4
2	FC200	200 SERIES STD SCREW CLAMP	4
3	GA5074065	HOSE BARB, ELBOW, 45 DEGREE, 2 FLANGE X 1 1/2 HOSE, BANJO, M200150BRB45	2
4	GA5077833	HOSE BARB, FLANGE, STRAIGHT, 2 FLANGE X 1 1/2 HOSE, BANJO, M200150BRB	2
5	GA5000141	NUT M10 NYLOC ZP	8
6	GA4000885	PLATE, MANIFOLD MOUNTING BRACKET, FRONT MOUNT 3PL, LF S3	1
7	GA5077840	PLUMBING COUPLING, STRAIGHT, 2" FLANGE X " FLANGE X 4 1/2" LONG, BANJO	2
8	GA0500130	U BOLT, ROUND TOP, M10 X 60 X 111mm	4
9	GA5000117	WASHER M10 FLAT SS HD	8
GA4909751 GOLDACRES		CHASSIS MANIFOLD, DM BALL VALVES, QUICK HITCH LINKAGE, LF S3	REV 00

DM Valve & Hose Guide Assembly Mountings, Front Mount 3PL

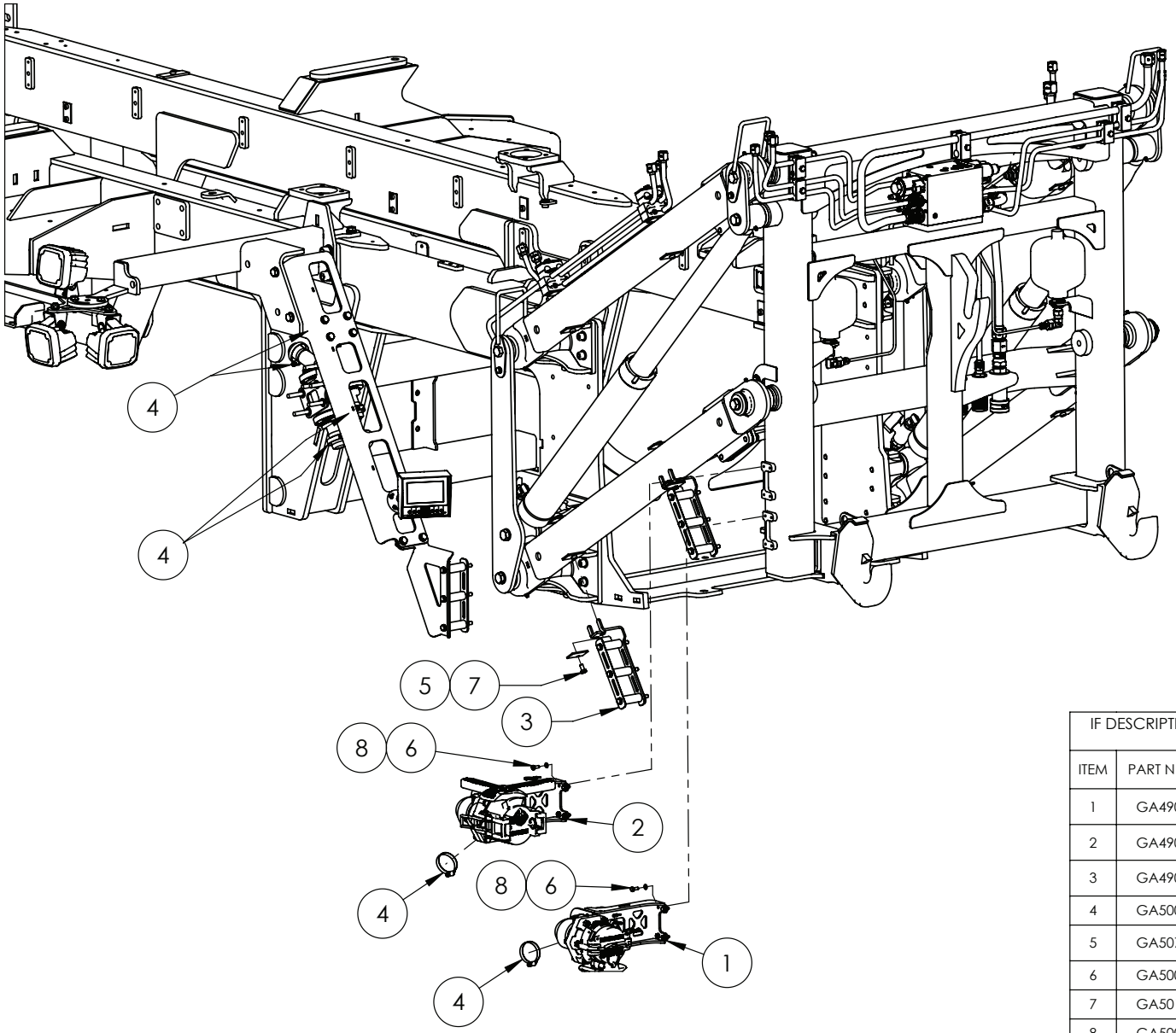

IF DESCRIPTION PREFIX IS ASSEMBLY DRAWING ONLY OR PRODUCTION DRAWING ONLY THE ITEM IS NOT FOR SALE			
ITEM	PART NUMBER	DESCRIPTION	QTY
1	GA4909733	DM VALVE AND SWIVEL ASSY, LOWER, QUICK HITCH LINKAGE, LF S3	1
2	GA4909734	DM VALVE AND SWIVEL ASSY, UPPER, QUICK HITCH LINKAGE, LF S3	1
3	GA4909743	HOSE GUIDE, FRONT MOUNT, HOSE ROUTING BRACKETS, G8 S3	2
4	GA5002873	HOSE CLAMP, 1 1/2" SS (32-50/12W)	6
5	GA5078042	MOUNTING CLAMP, DOUBLE TYPE, PLATE, TOP, GROUP 2, RCD-2PT	2
6	GA5004041	SET SCREW M6 X 16 GR8.8 ZP	8
7	GA5011465	SET SCREW M8 X 16 GR8.8 ZP	2
8	GA5004437	WASHER M6 FLAT SS HD	8
GA7800445 GOLDACRES		ASSEMBLY DRAWING ONLY, FRONT MOUNT LIFTING MECHANISM, PLUMBING INSTALLATION, LF S3	REV 02

Connection Point & Swivel Assy, Quick Hitch Linkage, (Up to S/N 204147)

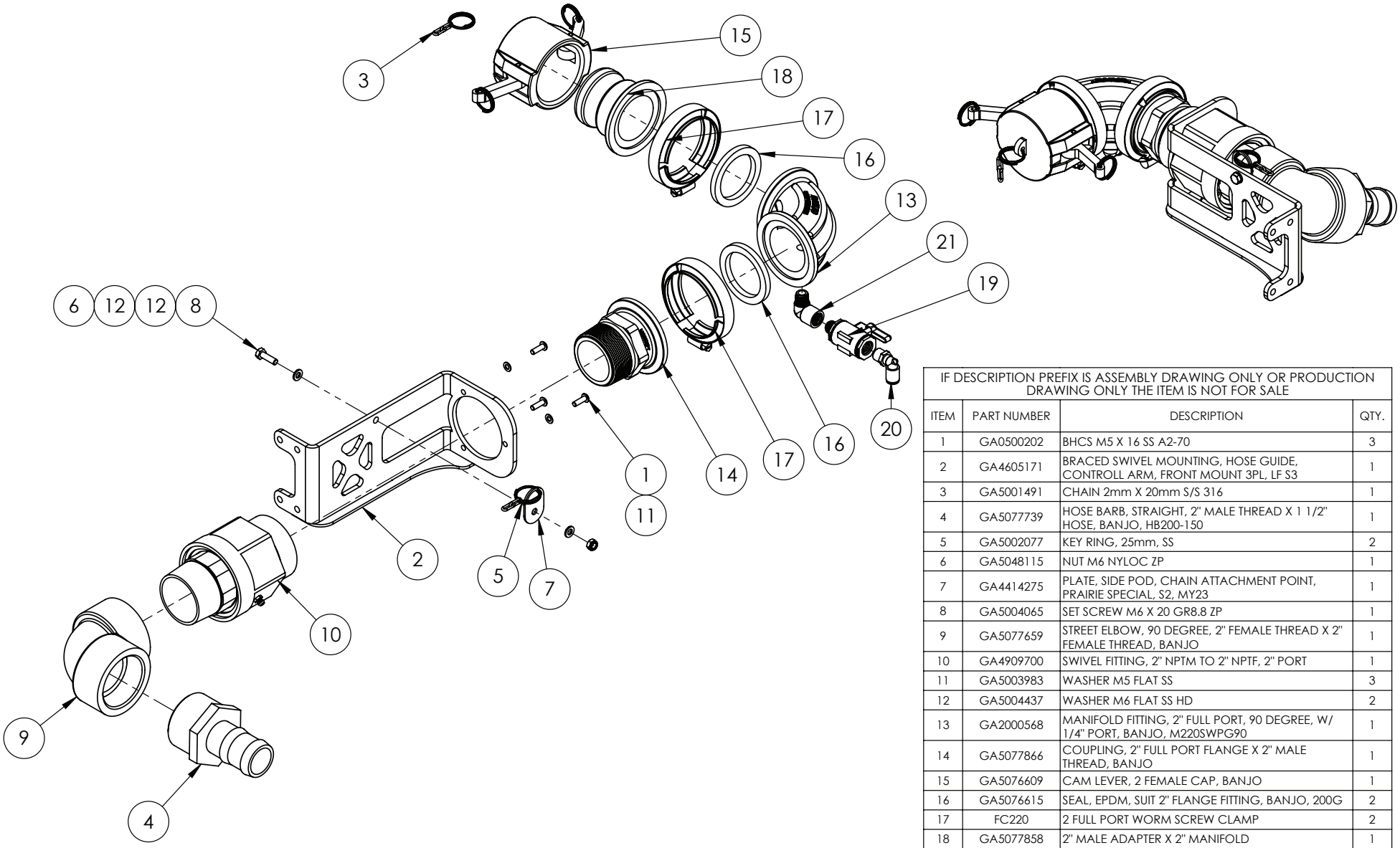

IF DESCRIPTION PREFIX IS ASSEMBLY DRAWING ONLY OR PRODUCTION DRAWING ONLY THE ITEM IS NOT FOR SALE			
ITEM	PART NUMBER	DESCRIPTION	QTY.
1	GA0500202	BHCS M5 X 16 SS A2-70	3
2	GA4605171	BRACED SWIVEL MOUNTING, HOSE GUIDE, CONTROLL ARM, FRONT MOUNT 3PL, LF S3	1
3	GA5001491	CHAIN 2mm X 20mm S/S 316	1
4	GA5077739	HOSE BARB, STRAIGHT, 2" MALE THREAD X 1 1/2" HOSE, BANJO, HB200-150	1
5	GA5002077	KEY RING, 25mm, SS	2
6	GA5048115	NUT M6 NYLOC ZP	1
7	GA4414275	PLATE, SIDE POD, CHAIN ATTACHMENT POINT, PRAIRIE SPECIAL, S2, MY23	1
8	GA5004065	SET SCREW M6 X 20 GR8.8 ZP	1
9	GA5077659	STREET ELBOW, 90 DEGREE, 2" FEMALE THREAD X 2" FEMALE THREAD, BANJO	1
10	GA4909700	SWIVEL FITTING, 2" NPTM TO 2" NPTF, 2" PORT	1
11	GA5003983	WASHER M5 FLAT SS	3
12	GA5004437	WASHER M6 FLAT SS HD	2
13	GA2000568	MANIFOLD FITTING, 2" FULL PORT, 90 DEGREE, W/ 1/4" PORT, BANJO, M220SWPG90	1
14	GA5077866	COUPLING, 2" FULL PORT FLANGE X 2" MALE THREAD, BANJO	1
15	GA5076609	CAM LEVER, 2 FEMALE CAP, BANJO	1
16	GA5076615	SEAL, EPDM, SUIT 2" FLANGE FITTING, BANJO, 200G	2
17	FC220	2 FULL PORT WORM SCREW CLAMP	2
18	GA5077858	2" MALE ADAPTER X 2" MANIFOLD	1
19	GA5026722	BALL VALVE, MICRO, 2 WAY, 1/4" NPT FEMALE THREADS, LV025MTV, BANJO	1
20	GA5052690	PNEUMATIC FITTING, ELBOW, 90 DEGREE, 1/4 BSP MALE X 8mm PUSH TYPE, METAL	1
21	GA5078132	1/4 POLY STREET ELBOW 90 DEGREE, SL025-90	1
GA4909701 GOLDACRES		CONNECTION POINT AND SWIVEL ASSY, QUICK HITCH LINKAGE, LF S3	REV 01

Ball Valve Assembly, Front Mount 3PL, (Up to S/N 204147)

REPLACEMENT PARTS			
ITEM	PART NUMBER	DESCRIPTION	QTY
A	GA5078191	STRAIGHT HANDLE 1-1/2 & 2 VLV, V20153	-

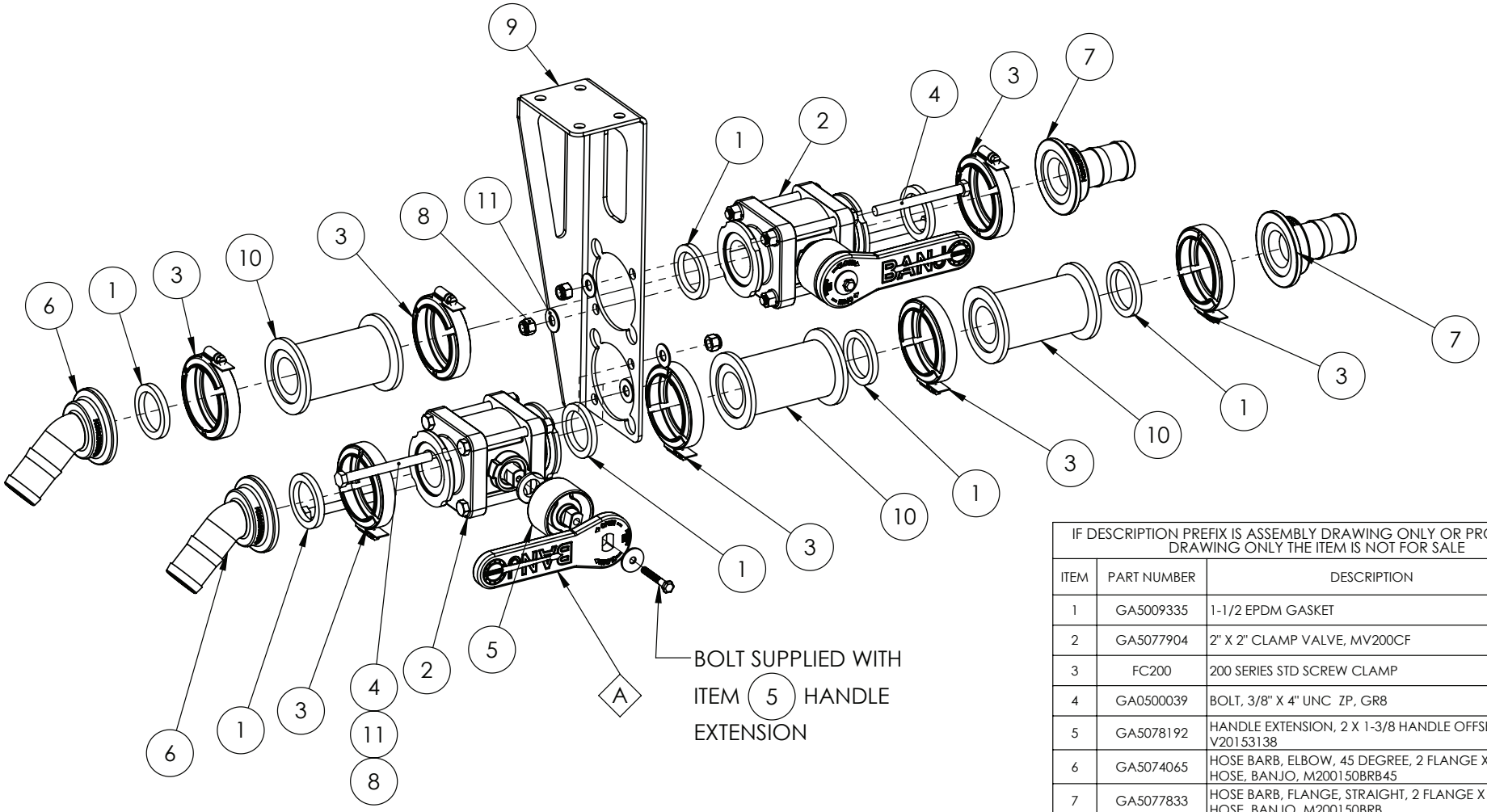

IF DESCRIPTION PREFIX IS ASSEMBLY DRAWING ONLY OR PRODUCTION DRAWING ONLY THE ITEM IS NOT FOR SALE			
ITEM	PART NUMBER	DESCRIPTION	QTY
1	GA5009335	1-1/2 EPDM GASKET	7
2	GA5077904	2" X 2" CLAMP VALVE, MV200CF	2
3	FC200	200 SERIES STD SCREW CLAMP	7
4	GA0500039	BOLT, 3/8" X 4" UNC ZP, GR8	4
5	GA5078192	HANDLE EXTENSION, 2 X 1-3/8 HANDLE OFFSET, V20153138	2
6	GA5074065	HOSE BARB, ELBOW, 45 DEGREE, 2 FLANGE X 1 1/2 HOSE, BANJO, M200150BRB45	2
7	GA5077833	HOSE BARB, FLANGE, STRAIGHT, 2 FLANGE X 1 1/2 HOSE, BANJO, M200150BRB	2
8	GA5048345	NUT 3/8", NYLOC, ZP, UNC	4
9	GA4000681	PLATE MOUNTING BRACKET, ISOLATION BALL VALVES, FRONT MOUNT 3PL, LF S3	1
10	GA5077840	PLUMBING COUPLING, STRAIGHT, 2" FLANGE X " FLANGE X 4 1/2" LONG, BANJO	3
11	GA5017623	WASHER 3/8 FLAT ZP HD	4
GA4909646 GOLDACRES		BALL VALVE ASSY, FRONT MOUNT 3PL	REV 00

DM Valve & Swivel Assy, Lower, Front Mount 3PL, (From S/N 204148)

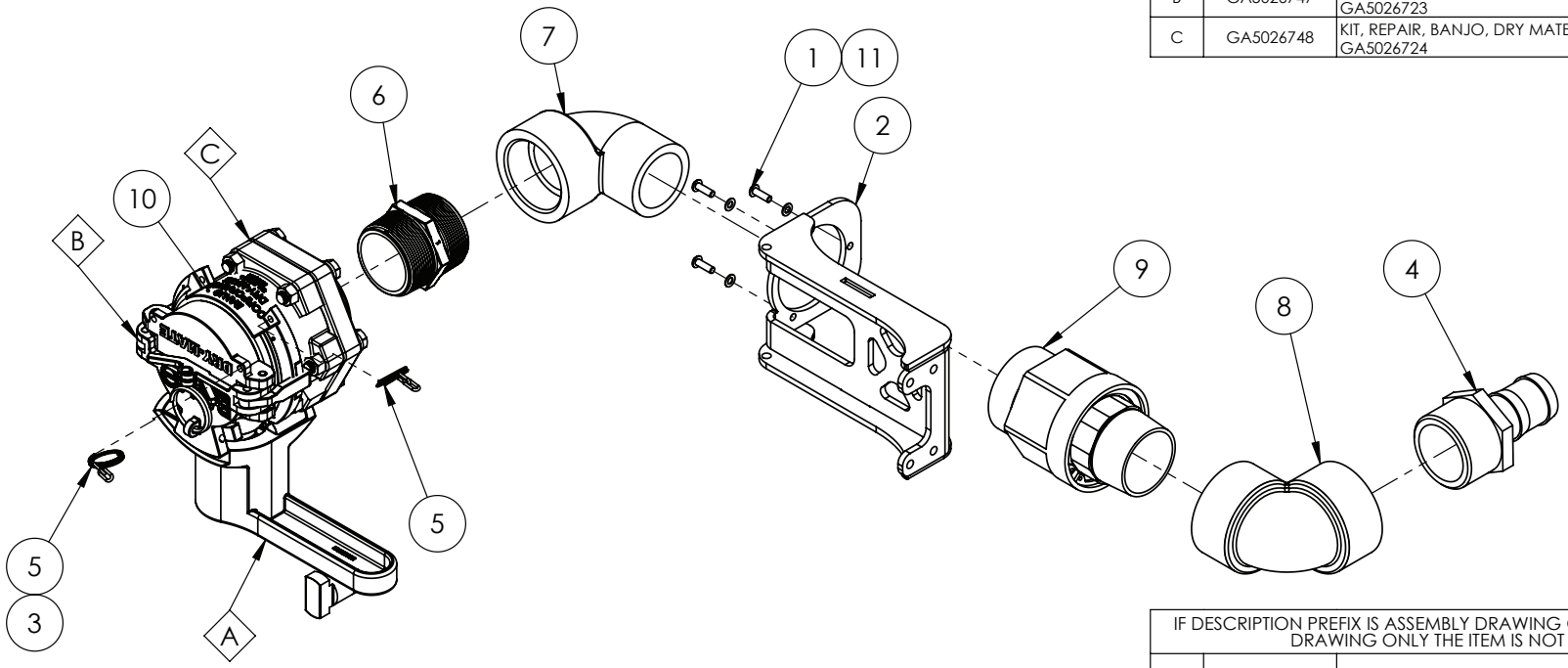

REPLACEMENT PARTS			
ITEM	PART NUMBER	DESCRIPTION	QTY
A	GA5026745	HANDLE, MALE, VALVE, BANJO, DRY MATE, SUIT, GA5026723	1
B	GA5026747	DUST CAP, BALL VALVE, DRY MATE, BANJO, SUIT, GA5026723	1
C	GA5026748	KIT, REPAIR, BANJO, DRY MATE, SUIT, GA5026723 & GA5026724	-

IF DESCRIPTION PREFIX IS ASSEMBLY DRAWING ONLY OR PRODUCTION DRAWING ONLY THE ITEM IS NOT FOR SALE			
ITEM	PART NUMBER	DESCRIPTION	QTY
1	GA0500202	BHCS M5 X 16 SS A2-70	3
2	GA4605177	BRACED SWIVEL & DM VALVE MOUNTING, FRONT MOUNT 3PL, LF S3	1
3	GA5001491	CHAIN 2mm X 20mm S/S 316	1
4	GA5077739	HOSE BARB, STRAIGHT, 2" MALE THREAD X 1 1/2" HOSE, BANJO, HB200-150	1
5	GA5002077	KEY RING, 25mm, SS	2
6	GA5077919	NIPPLE, SHORT, 2 THREAD X 2 THREAD, BANJO, NIP200-SH	1
7	GA5078142	STREET ELBOW, 90 DEGREE, 2 MALE THREAD X 2 FEMALE THREAD, BANJO	1
8	GA5077659	STREET ELBOW, 90 DEGREE, 2" FEMALE THREAD X 2" FEMALE THREAD, BANJO	1
9	GA4909700	SWIVEL FITTING, 2" NPTM TO 2" NPTF, 2" PORT	1
10	GA5026723	VALVE, DRY MATE, MALE, 2" FEMALE THREAD, LEVER HANDLE, BANJO, DM220A	1
11	GA5003983	WASHER M5 FLAT SS	3
GA4909733 GOLDACRES		DM VALVE AND SWIVEL ASSY, LOWER, QUICK HITCH LINKAGE, LF S3	REV 00

DM Valve & Swivel Assy, Upper, Front Mount 3PL, (From S/N 204148)

REPLACEMENT PARTS			
ITEM	PART NUMBER	DESCRIPTION	QTY
A	GA5026746	HANDLE, FEMALE, VALVE, BANJO, DRY MATE, SUIT, GA5026724	1
B	GA5026750	DUST PLUG, BALL VALVE, DRY MATE, BANJO, SUIT, GA5026724	1
C	GA5026748	KIT, REPAIR, BANJO, DRY MATE, SUIT, GA5026723 & GA5026724	-

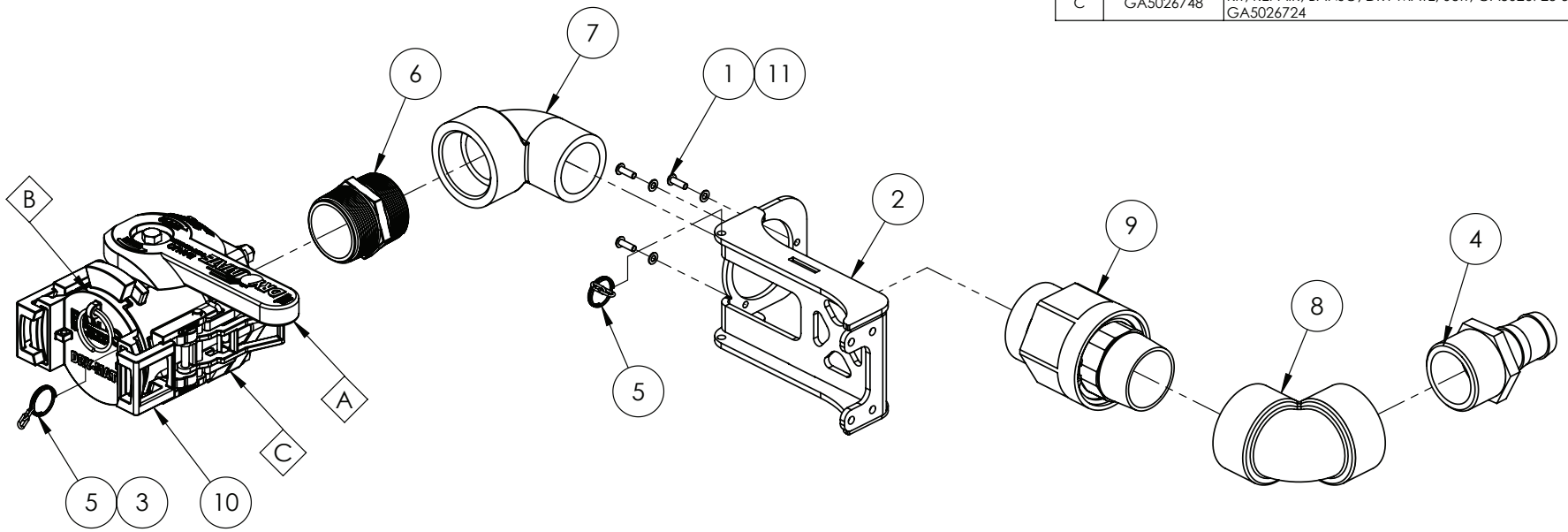

IF DESCRIPTION PREFIX IS ASSEMBLY DRAWING ONLY OR PRODUCTION DRAWING ONLY THE ITEM IS NOT FOR SALE			
ITEM	PART NUMBER	DESCRIPTION	QTY.
1	GA0500202	BHCS M5 X 16 SS A2-70	3
2	GA4605177	BRACED SWIVEL & DM VALVE MOUNTING, FRONT MOUNT 3PL, LF S3	1
3	GA5001491	CHAIN 2mm X 20mm S/S 316	1
4	GA5077739	HOSE BARB, STRAIGHT, 2" MALE THREAD X 1 1/2" HOSE, BANJO, HB200-150	1
5	GA5002077	KEY RING, 25mm, SS	2
6	GA5077919	NIPPLE, SHORT, 2 THREAD X 2 THREAD, BANJO, NIP200-SH	1
7	GA5078142	STREET ELBOW, 90 DEGREE, 2 MALE THREAD X 2 FEMALE THREAD, BANJO	1
8	GA5077659	STREET ELBOW, 90 DEGREE, 2" FEMALE THREAD X 2" FEMALE THREAD, BANJO	1
9	GA4909700	SWIVEL FITTING, 2" NPTM TO 2" NPTF, 2" PORT	1
10	GA5026724	VALVE, DRY MATE, FEMALE, 2" FEMALE THREAD, LEVER HANDLE, BANJO, DM220D	1
11	GA5003983	WASHER M5 FLAT SS	3
GA4909734 GOLDACRES		DM VALVE AND SWIVEL ASSY, UPPER, QUICK HITCH LINKAGE, LF S3	REV 00

Hose Routing Bracket Assembly, Front Mount 3PL

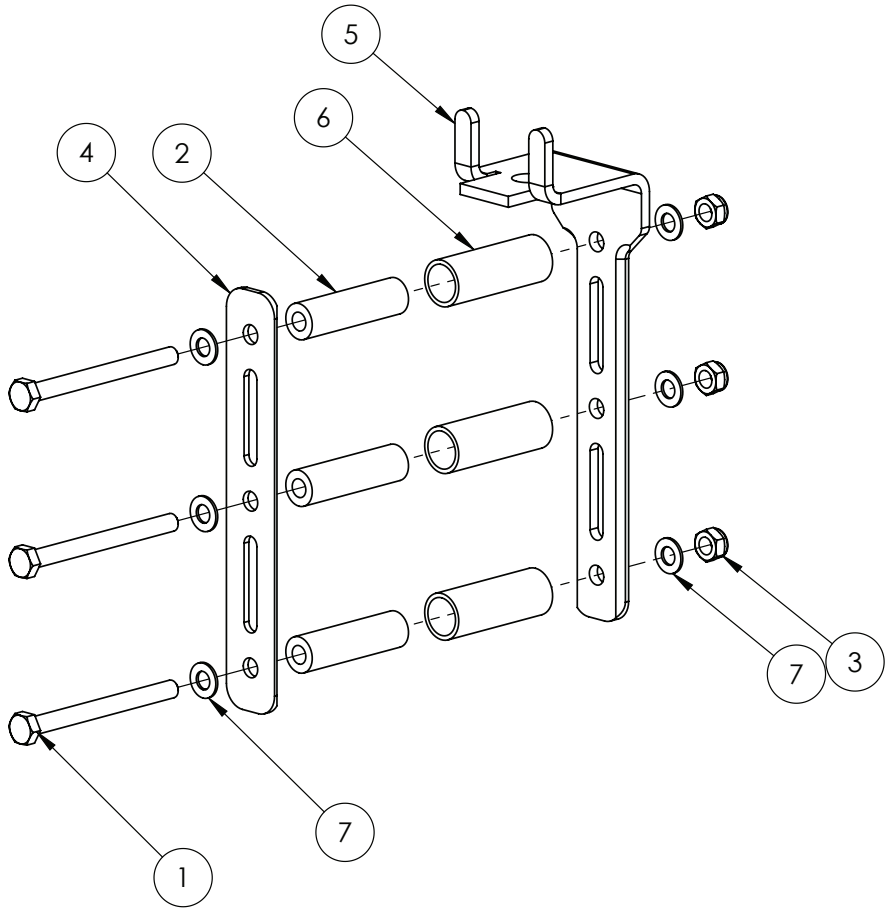

IF DESCRIPTION PREFIX IS ASSEMBLY DRAWING ONLY OR PRODUCTION DRAWING ONLY THE ITEM IS NOT FOR SALE			
ITEM	PART NUMBER	DESCRIPTION	QTY
1	GA5011495	BOLT M8 X 90 GR8.8 ZP	3
2	GA4553289	CRUSH TUBE, HOSE GUIDE ROLLER, QUICK HITCH, LF S3	3
3	GA5052590	NUT M8 NYLOC SS	3
4	GA4000818	PLATE, BRACE, ROLLER HOSE GUIDE, CONTROL ARM, FRONT MOUNT 3PL, LF S3	1
5	GA4000807	PLATE, ROLLER HOSE GUIDE, CONTROL ARM, FRONT MOUNT 3PL, LF S3	1
6	GA4553290	ROLLER, 3PL QUICK HITCH HOSE GUIDE, FRONT MOUNT, LF S3	3
7	GA5003651	WASHER M8 FLAT SS	6
GA4909743 GOLDACRES		HOSE GUIDE, FRONT MOUNT, HOSE ROUTING BRACKETS, G8 S3	REV 00

Hose Mounting Bracket Assembly, Front Mount 3PL

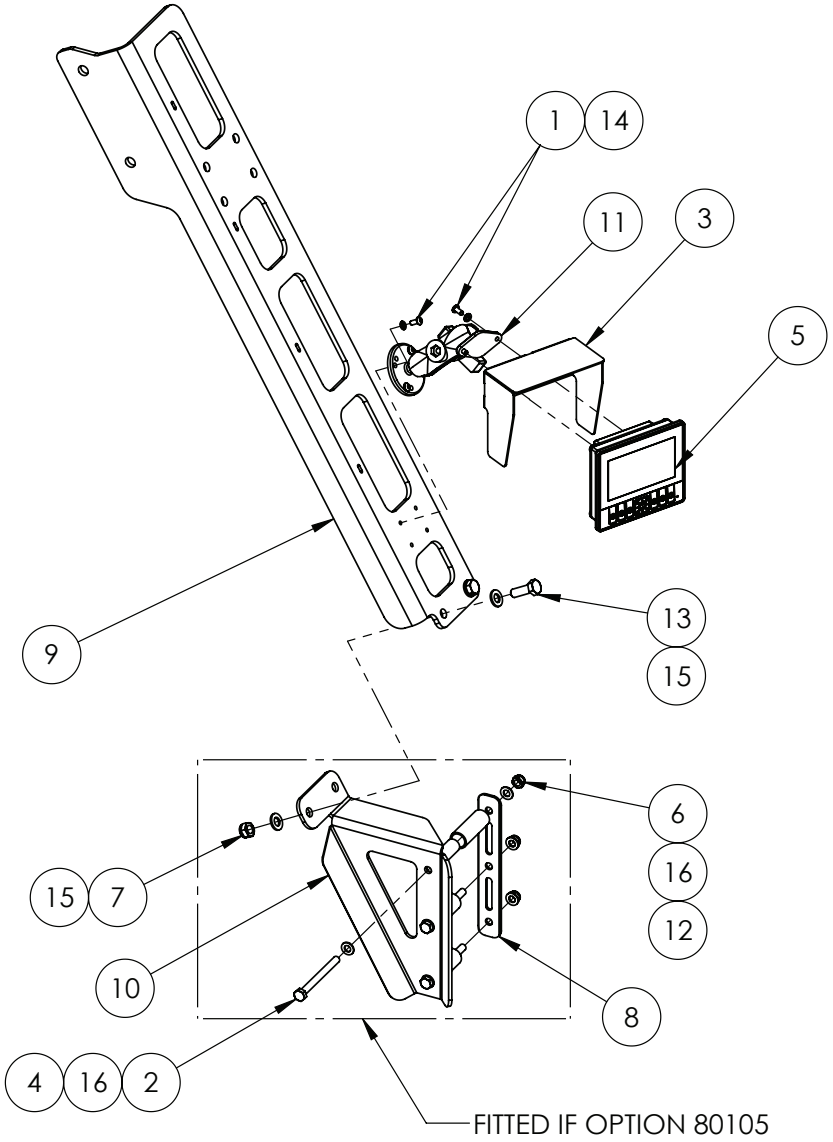

IF DESCRIPTION PREFIX IS ASSEMBLY DRAWING ONLY OR PRODUCTION DRAWING ONLY THE ITEM IS NOT FOR SALE			
ITEM	PART NUMBER	DESCRIPTION	QTY
1	GA0500092	BHCS M5 X 12 SS A2-70	6
2	GA5011495	BOLT M8 X 90 GR8.8 ZP	3
3	GA4000331	COVER PLATE SUIT IFM CR1140 DISPLAY	1
4	GA4553289	CRUSH TUBE, HOSE GUIDE ROLLER, QUICK HITCH, LF S3	3
5	GA3001173	DISPLAY SCREEN, 4.3", NON TOUCH, G6/G8 S3, MY24, IFM CR1140	1
6	GA5004917	NUT M8 NYLOC ZP	3
7	GA5000141	NUT M10 NYLOC ZP	2
8	GA4000818	PLATE, BRACE, ROLLER HOSE GUIDE, CONTROL ARM, FRONT MOUNT 3PL, LF S3	1
9	GA4000227	PLATE, FRONT FILL MOUNT, LF SP S3	1
10	GA4000822	PLATE, HOSE GUIDE, FRONT MOUNT, LF S3	1
11	GA5068930	RAM MOUNT, UNIVERSAL, ADJUSTABLE, B SIZE 1" BALL, 5" LENGTH, RAM-B-138U	1
12	GA4553290	ROLLER, 3PL QUICK HITCH HOSE GUIDE, FRONT MOUNT, LF S3	3
13	GA5065455	SET SCREW M10 X 30 GR8.8 ZP	2
14	GA5003983	WASHER M5 FLAT SS	6
15	GA5000117	WASHER M10 FLAT SS HD	4
16	GA5003651	WASHER M8 FLAT SS	6
GA6101996 GOLDACRES		FRONT MOUNT, HOSE ROUTING BRACKETS, G8S3	REV 00

Mounting Mechanism, Front Mount 3PL

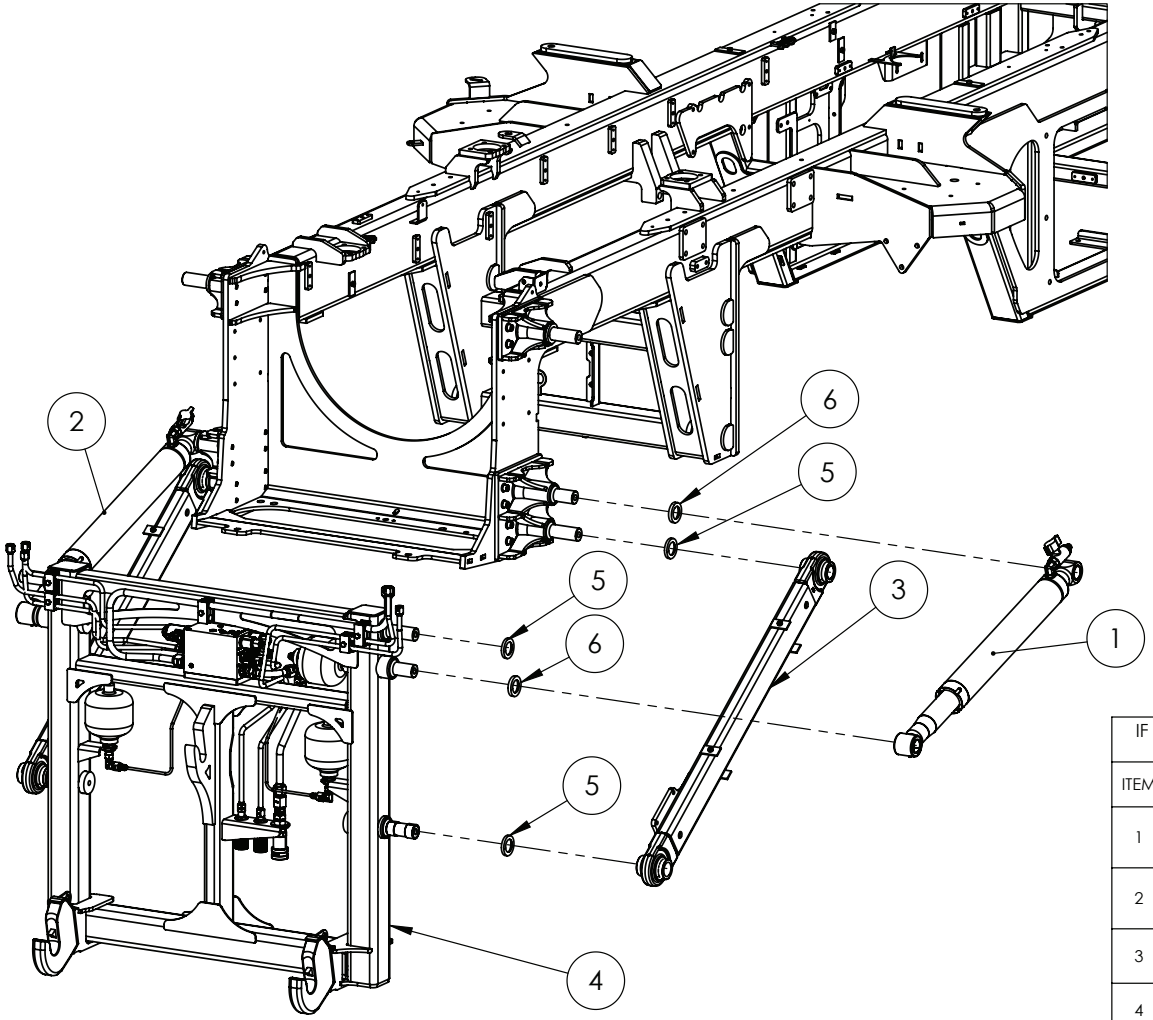

IF DESCRIPTION PREFIX IS ASSEMBLY DRAWING ONLY OR PRODUCTION DRAWING ONLY THE ITEM IS NOT FOR SALE			
ITEM	PART NUMBER	DESCRIPTION	QTY
1	GA4909712	ASSEMBLY DRAWING ONLY, RAM ASSY, HYDRAULIC FITTINGS, LHS, FRONT MOUNT LIFTING MECHANISM, LF S3	1
2	GA4909713	ASSEMBLY DRAWING ONLY, RAM ASSY, HYDRAULIC FITTINGS, RHS, FRONT MOUNT LIFTING MECHANISM, LF S3	1
3	GA4605039	CONTROLL ARM, FRONT MOUNT 3PL, LF S3	2
4	GA4909736	QUICK HITCH FRAME, FRONT MOUNT 3PL, LF S3	1
5	GA4553241	SPACER COLLAR, CONTROLL ARM PIN, FRONT MOUNT 3PL	8
6	GA4553240	SPACER COLLAR, RAM PIN, FRONT MOUNT 3PL, LF S3	4
GA7800446 GOLDACRES		ASSEMBLY DRAWING ONLY, FRONT MOUNT LIFTING MECHANISM, BOTTOM ARM, HYDRAULIC RAM INSTALLATION, LF S3	REV 00

Hydraulic Cylinder Assembly, Lift, LH, Front Mount 3PL

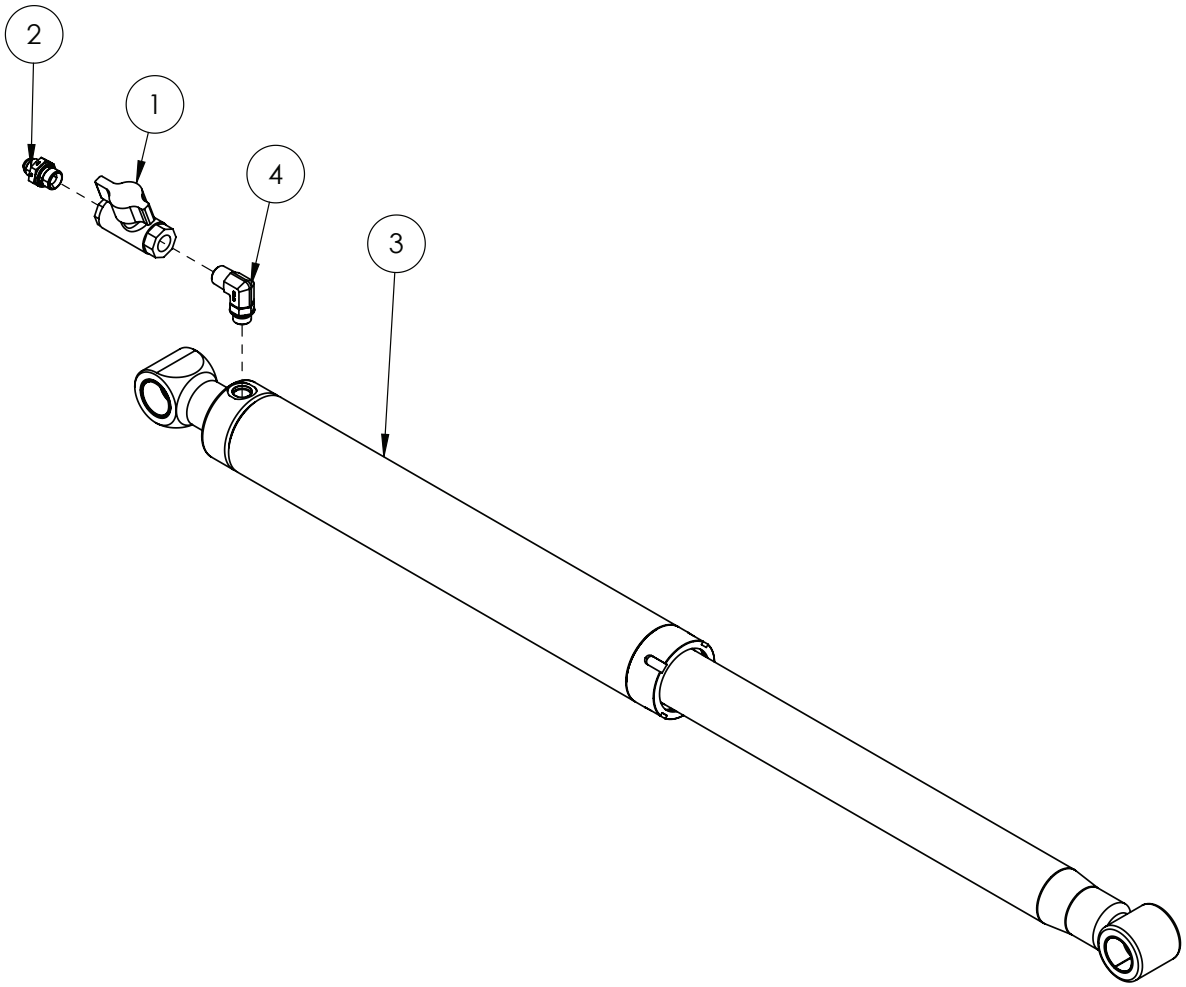

IF DESCRIPTION PREFIX IS ASSEMBLY DRAWING ONLY OR PRODUCTION DRAWING ONLY THE ITEM IS NOT FOR SALE			
ITEM	PART NUMBER	DESCRIPTION	QTY.
1	GA5000835	BALL VALVE HYDRAULIC 1/2" FF	1
2	GA3500303	HYDRAULIC ADAPTOR NIPPLE, 1/2" BSPP TO 3/4" JIC	1
3	GA3501892	HYDRAULIC CYLINDER, 1401mm SINGLE ACTING, 3" PISTON 492mm STROKE, 38mm PINS	1
4	GA3500349	HYDRAULIC ADAPTOR, ELBOW, 90 DEGREE, 1/2" BSPT MALE X 3/4" UN MALE O-RING	1
GA4909712 GOLDACRES		ASSEMBLY DRAWING ONLY, RAM ASSY, HYDRAULIC FITTINGS, LHS, FRONT MOUNT LIFTING MECHANISM, LF S3	REV 00

Hydraulic Cylinder Assembly, Lift, RH, Front Mount 3PL

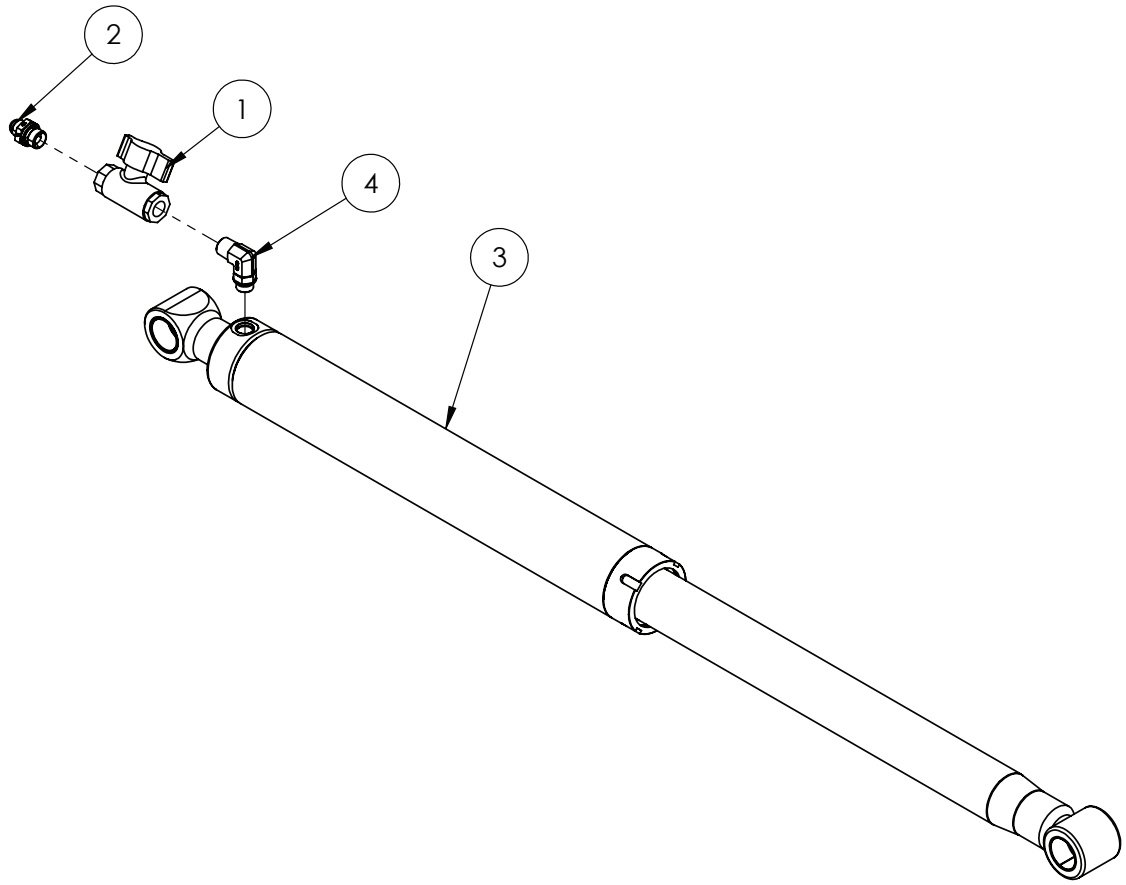

IF DESCRIPTION PREFIX IS ASSEMBLY DRAWING ONLY OR PRODUCTION DRAWING ONLY THE ITEM IS NOT FOR SALE			
ITEM	PART NUMBER	DESCRIPTION	QTY.
1	GA5000835	BALL VALVE HYDRAULIC 1/2" FF	1
2	GA3500303	HYDRAULIC ADAPTOR NIPPLE, 1/2" BSPP TO 3/4" JIC	1
3	GA3501892	HYDRAULIC CYLINDER, 1401mm SINGLE ACTING, 3" PISTON 492mm STROKE, 38mm PINS	1
4	GA3500349	HYDRAULIC ADAPTOR, ELBOW, 90 DEGREE, 1/2" BSPT MALE X 3/4" UN MALE O-RING	1
GA4909713 GOLDACRES		ASSEMBLY DRAWING ONLY, RAM ASSY, HYDRAULIC FITTINGS, RHS, FRONT MOUNT LIFTING MECHANISM, LF S3	REV 00

Hydraulic Hose Clamps, Front Mount 3PL

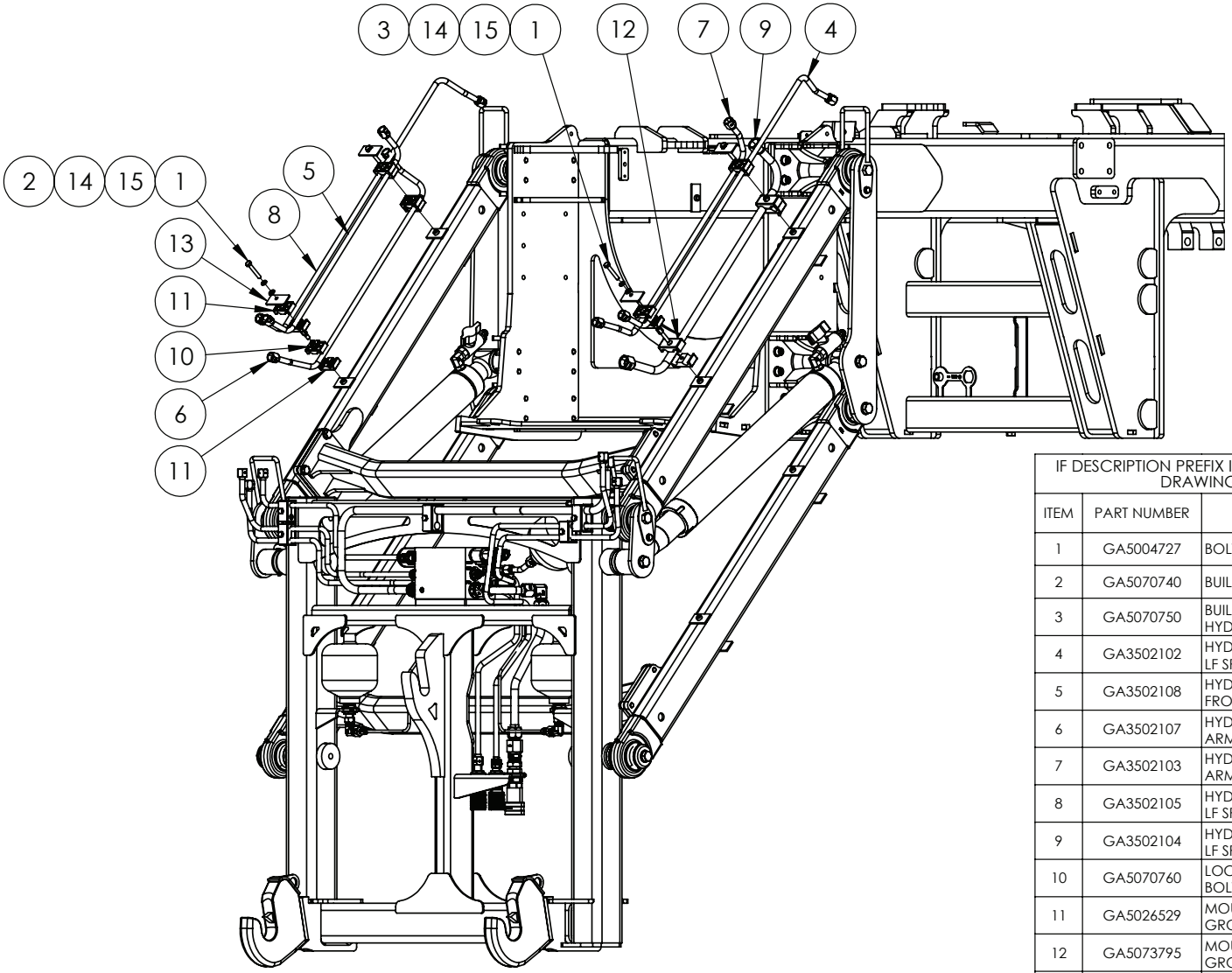

IF DESCRIPTION PREFIX IS ASSEMBLY DRAWING ONLY OR PRODUCTION DRAWING ONLY THE ITEM IS NOT FOR SALE			
ITEM	PART NUMBER	DESCRIPTION	QTY
1	GA5004727	BOLT M8 X 50 GR8.8 ZP	4
2	GA5070740	BUILD UP BOLT, STACKING, M8 X 20 HYDAC	2
3	GA5070750	BUILD UP BOLT, STACKING, M8 X 34, WITH WASHER, HYDAC	2
4	GA3502102	HYDRAULIC TUBE, LEFT HAND CYLINDER, 3PL ARM, LF SP S3	1
5	GA3502108	HYDRAULIC TUBE, MANIFOLD LOAD SENSE, 3PL FRONT, LF SP S3	1
6	GA3502107	HYDRAULIC TUBE, PRESSURE LINE TO MANIFOLD, 3PL ARM, LF SP S3	1
7	GA3502103	HYDRAULIC TUBE, PUMP MOTOR CASE DRAIN, 3PL ARM, LF SP S3	1
8	GA3502105	HYDRAULIC TUBE, RIGHT HAND CYLINDER, 3PL ARM, LF SP S3	1
9	GA3502104	HYDRAULIC TUBE, TANK LINE TO COOLER, 3PL ARM, LF SP S3	1
10	GA5070760	LOCKING PLATE SUIT HYDAC CLAMPS, BUILD UP BOLT, STACKING	2
11	GA5026529	MOUNTING CLAMP, DOUBLE TYPE, JAW, PAIR, GROUP 2, 12.7mm, RCD-12.7J	6
12	GA5073795	MOUNTING CLAMP, DOUBLE TYPE, JAW, PAIR, GROUP 3, 19mm, BLACK, RCD-19J	2
13	GA5078046	MOUNTING CLAMP, DOUBLE TYPE, PLATE, TOP, GROUP 3, RCD-3PT	4
14	GA5003643	WASHER M8 FLAT SS HD	4
15	GA5004919	WASHER M8 SPRING SS	4
GA7800454 GOLDACRES		ASSEMBLY DRAWING ONLY, FRONT MOUNT LIFTING MECHANISM,HYDRAULIC COMPONENT INSTALLATION, LF S3	REV 01

Accumulator Assembly, Front Mount 3PL

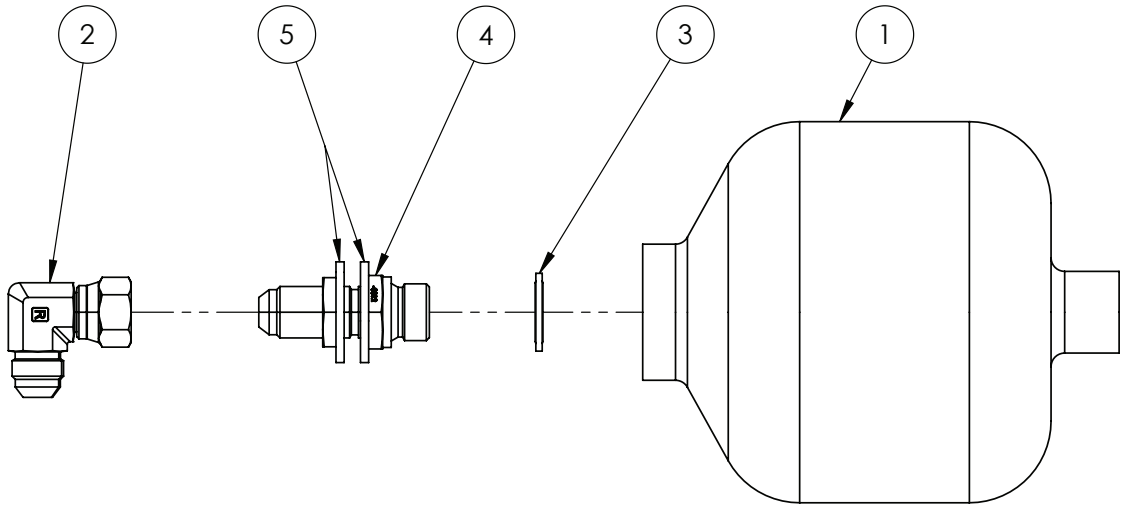

IF DESCRIPTION PREFIX IS ASSEMBLY DRAWING ONLY OR PRODUCTION DRAWING ONLY THE ITEM IS NOT FOR SALE			
ITEM	PART NUMBER	DESCRIPTION	QTY
1	GA5007787	ACCUMULATOR 1.0L PRECHARGE 70 BAR	1
2	GA3500822	HYDRAULIC ADAPTOR ELBOW, 3/4" JIC MALE X 3/4" JIC FEMALE SWIVEL, S15-1212	1
3	GA3500159	HYDRAULIC SEAL, BONDED, 1/2", RL21D-08	1
4	GA3500717	HYDRAULIC ADAPTOR, BULKHEAD NIPPLE, 1/2" BSPP MALE X 3/4" JIC MALE, S130P-0812	1
5	GA5001741	WASHER M20 FLAT SS HD	2
GA4909640 GOLDACRES		ACCUMULATOR ASSY, 3PL FRONT MOUNT, LF S3	REV 00

07 - Side Modules & Controls

LH Pod

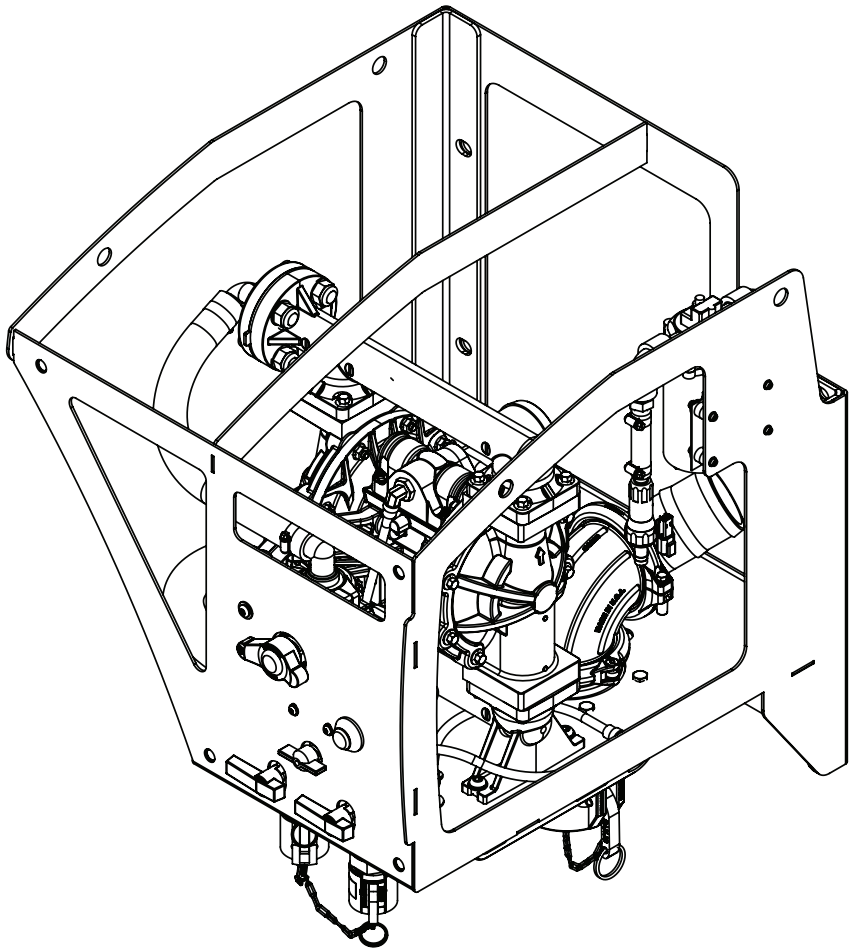

GA4954225	FILL POD ASSEMBLY, LARGE FRAME SP, SERIES 3	REV 00
GOLDACRES		

Decals, Fill, LH Pod

FRONT VIEW

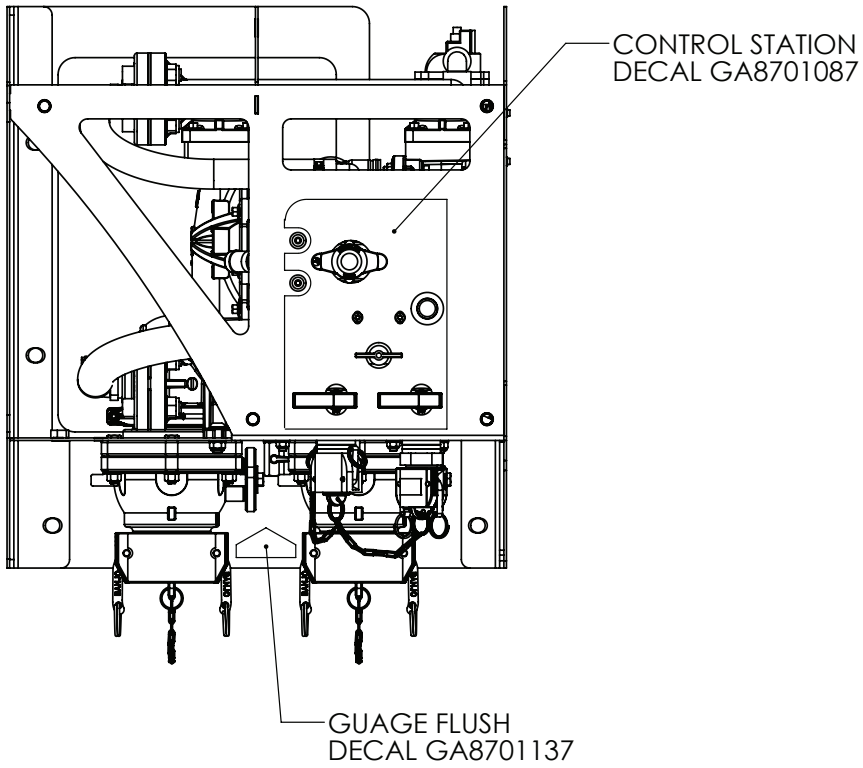

BOTTOM VIEW

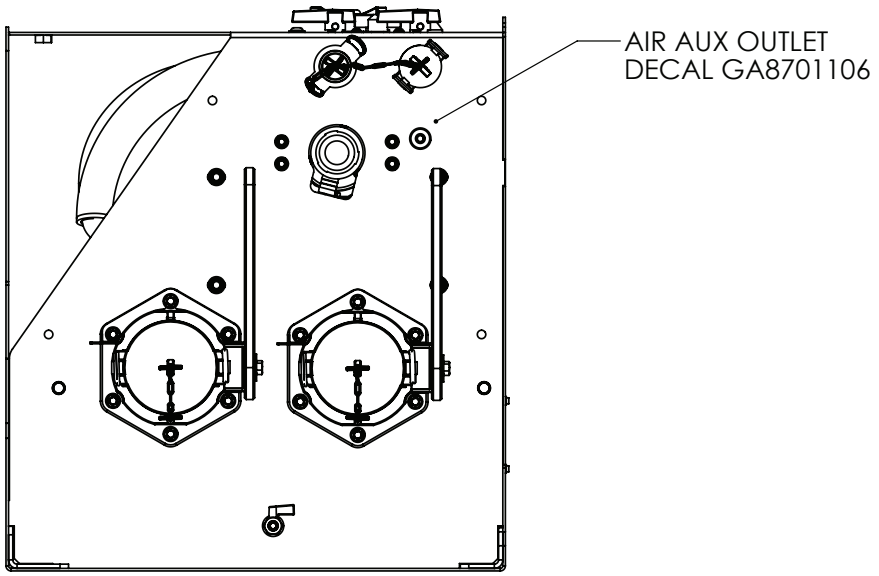

GA4954225 GOLDACRES	FILL POD ASSEMBLY, LARGE FRAME SP, SERIES 3	REV 00

Inlet & Air Feed Mounting, LH Pod

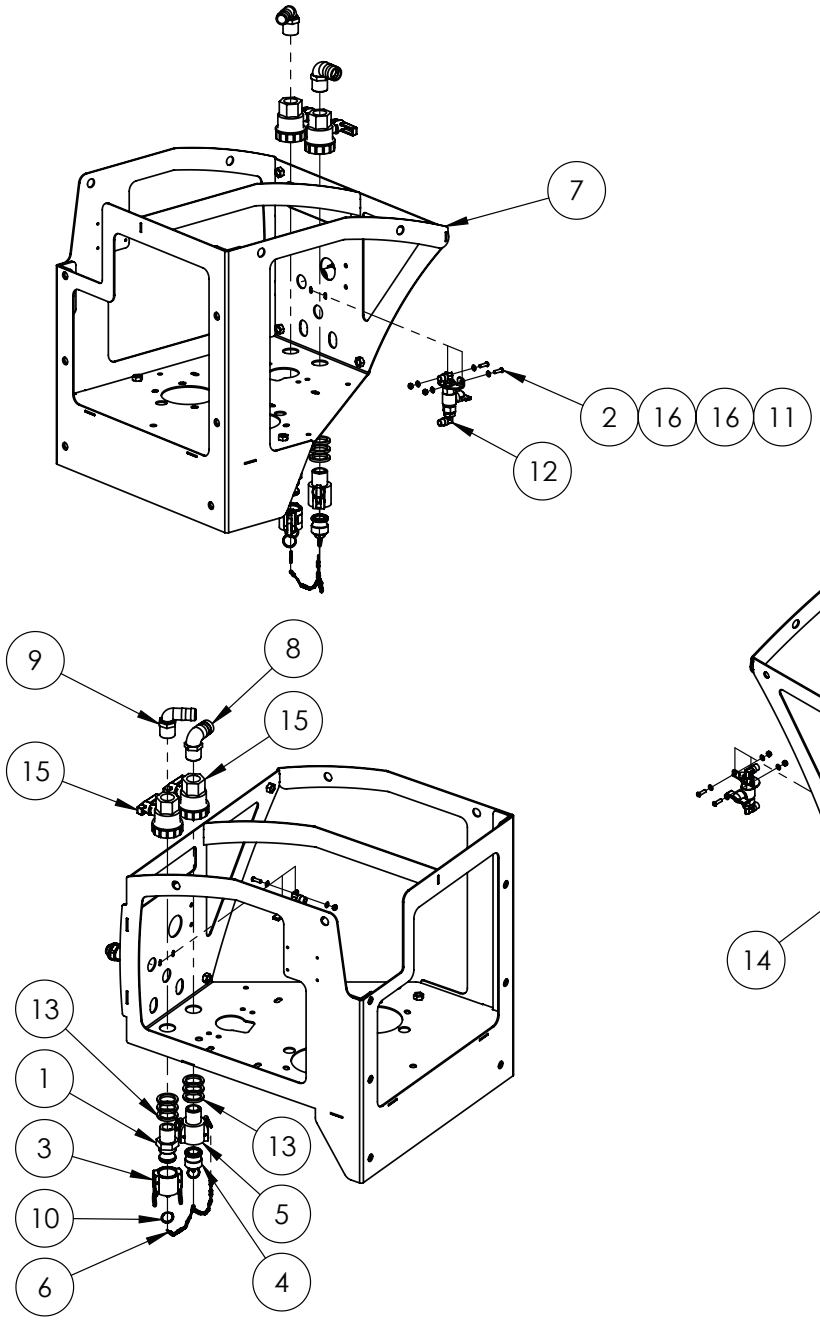

IF DESCRIPTION PREFIX IS ASSEMBLY DRAWING ONLY OR PRODUCTION DRAWING ONLY THE ITEM IS NOT FOR SALE			
ITEM	PART NUMBER	DESCRIPTION	QTY
1	GA5076012	1" MALE ADAPTOR MALE THREAD	1
2	GA5004053	BHCS M6 X 20 SS A2-70	2
3	GA5076004	CAM LEVER, CAP, SUITS 1 AND 1 1/4 MALE, BANJO, 100125CAP	1
4	GA5076005	CAM LEVER, MALE PLUG, SUITS 1 & 1 1/4 COUPLINGS, BANJO	1
5	GA5076007	CAM LEVER, 1 FEMALE COUPLER, 1 MALE THREAD, BANJO	1
6	GA4912620	CHAIN 2 X 20 mm SS 316, 146102, CUT 20 LINKS, GA5001491	1
7	GA4604990	FILL POD FRAME, LARGE FRAME SP, S3	1
8	GA5077720	HOSE BARB, ELBOW, 90 DEGREE, 1 MALE THREAD X 1 1/4 HOSE, BANJO	1
9	GA5077723	HOSE BARB, ELBOW, 90 DEGREE, 1" MALE X 1" HOSE, BANJO	1
10	GA5002077	KEY RING, 25mm, SS	1
11	GA5048115	NUT M6 NYLOC ZP	2
12	GA4949510	PRODUCTION DRAWING ONLY, VALVE, CHEMICAL PUMP AIR FEED, G6 MY20	1
13	GA4552865	SPACER, RING, 34mm, POD FILL POINT FITTING	6
14	GA3001175	SWITCH, DOME BUTTON, PUSH ON/OFF, BLACK BODY, GREEN LENS, 12V 20A, COBO, 1025544	1
15	GA5078164	VALVE, BALL, 1 FEMALE THREAD INLET / OUTLET, FULL PORT, LEVER HANDLE, BANJO	2
16	GA5004437	WASHER 6mm FLAT SS	4
GA4954225-01 GOLDACRES		ASSEMBLY DRAWING ONLY, FILL POD ASSEMBLY, LARGE FRAME SP, SERIES 3	REV 00

Chemical Pump, Air Feed Valve Assembly, LH Pod

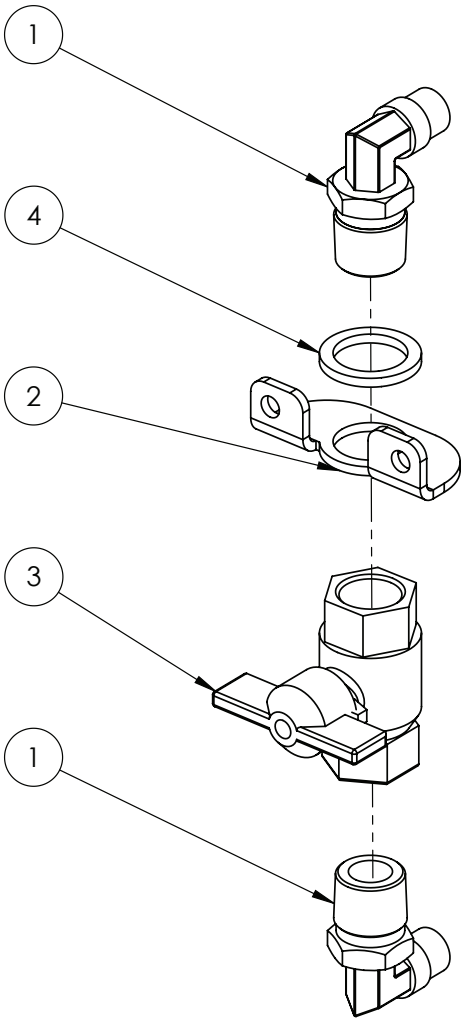

IF DESCRIPTION PREFIX IS ASSEMBLY DRAWING ONLY OR PRODUCTION DRAWING ONLY THE ITEM IS NOT FOR SALE			
ITEM	PART NUMBER	DESCRIPTION	QTY
1	GA5078524	AIR FITTING, ELBOW, SWIVEL, 3/8" TUBE, 1/2" NPT MALE, PUSH IN, BRASS, ALKON - AQ69-DOTS-6X8	2
2	GA4406205	PLATE, BRASS 1/2" BALL VALVE MOUNT BRACKET	1
3	GA5018307	VALVE, BALL, 12mm, 1/2" FEMALE, BUTTERFLY HANDLE, BRASS	1
4	GA4407545	WASHER, SPACER, OD 30, ID 22, 3mm THICK, SS	1
GA4949510 GOLDACRES		PRODUCTION DRAWING ONLY, VALVE, CHEMICAL PUMP AIR FEED, G6 MY20	REV 00

Fill, Micromatic & Chemical Pump Selector Valve Mounting, LH Pod

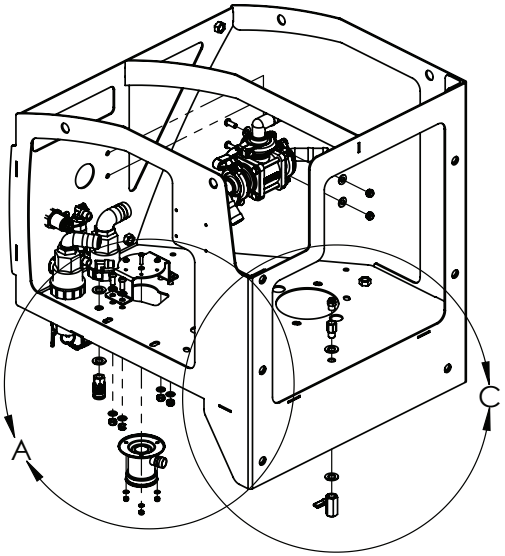

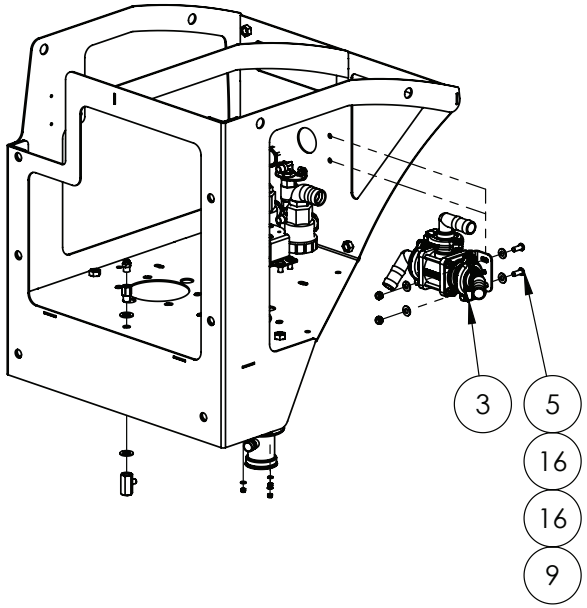

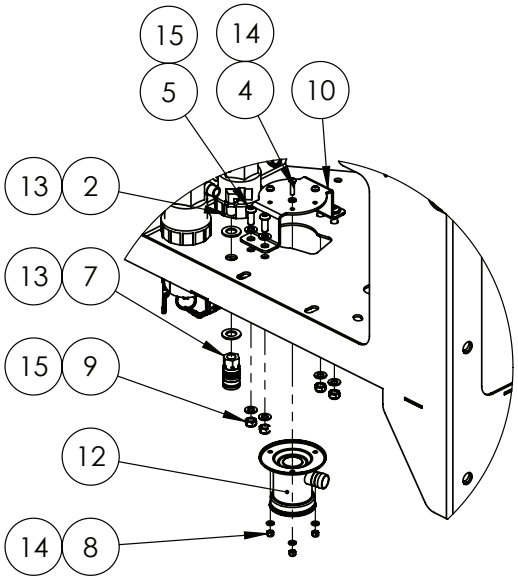

DETAIL A

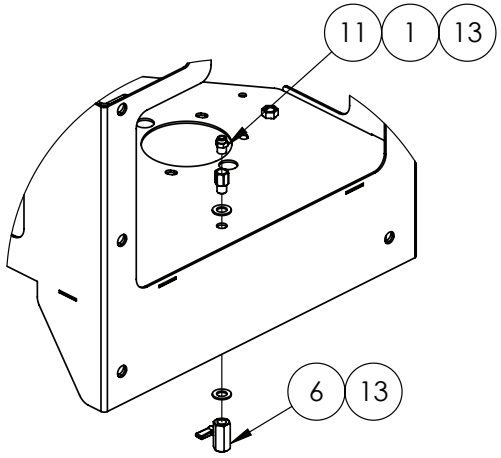

DETAIL C

IF DESCRIPTION PREFIX IS ASSEMBLY DRAWING ONLY OR PRODUCTION DRAWING ONLY THE ITEM IS NOT FOR SALE			
ITEM	PART NUMBER	DESCRIPTION	QTY
1	GA5074085	ADAPTOR FITTING, BRASS, 1/4" BSPT MALE, 1/4" BSPT FEMALE, BF072-0404	1
2	GA5078518	AIR FITTING, ELBOW, SWIVEL, 3/8" TUBE, 1/4" NPT MALE, PUSH IN, BRASS, ALKON - AQ69-DOTS-6X4	1
3	GA4949505	ASSEMBLY DRAWING ONLY, VALVE, CHEMICAL PUMP OUTLET SELECTOR, G6 MY20	1
4	GA0500004	BHCS M5 X 20 SS A2-70	3
5	GA0500102	BHCS M8 X 20 SS A2-70	6
6	GA5018321	BALL VALVE, 1/4" FEMALE, BLACK LEVER HANDLE, CHROMED	1
7	GA5076620	COUPLING, AIR, 1/4" BSPP FEMALE X FEMALE, BRASS, 200	1
8	GA5003974	NUT M5 NYLOC ZP	3
9	GA5004917	NUT M8 NYLOC ZP	6
10	GA4415825	PLATE, MICROMATIC RINSE SOCKET MOUNT. S3 SP	1
11	GA5045140	PNEUMATIC FITTING, NIPPLE, PUSH IN 6mm X 1/4" BSPT, BRASS	1
12	GA5018800	RINSING SOCKET, 3 PIN, MICROMATIC / ENVIRO DRUM COUPLING	1
13	GA5017655	WASHER 1/2 FLAT SS	4
14	GA5003983	WASHER 5mm FLAT SS	6
15	GA5003643	WASHER 8mm FLAT SS HD	8
16	GA5003643	WASHER 8mm FLAT SS HD	4
GA4954225-02 GOLDACRES		ASSEMBLY DRAWING ONLY, FILL POD ASSEMBLY, LARGE FRAME SP, SERIES 3	REV 00

Selector Valve Assembly, Chemical Pump, LH Pod

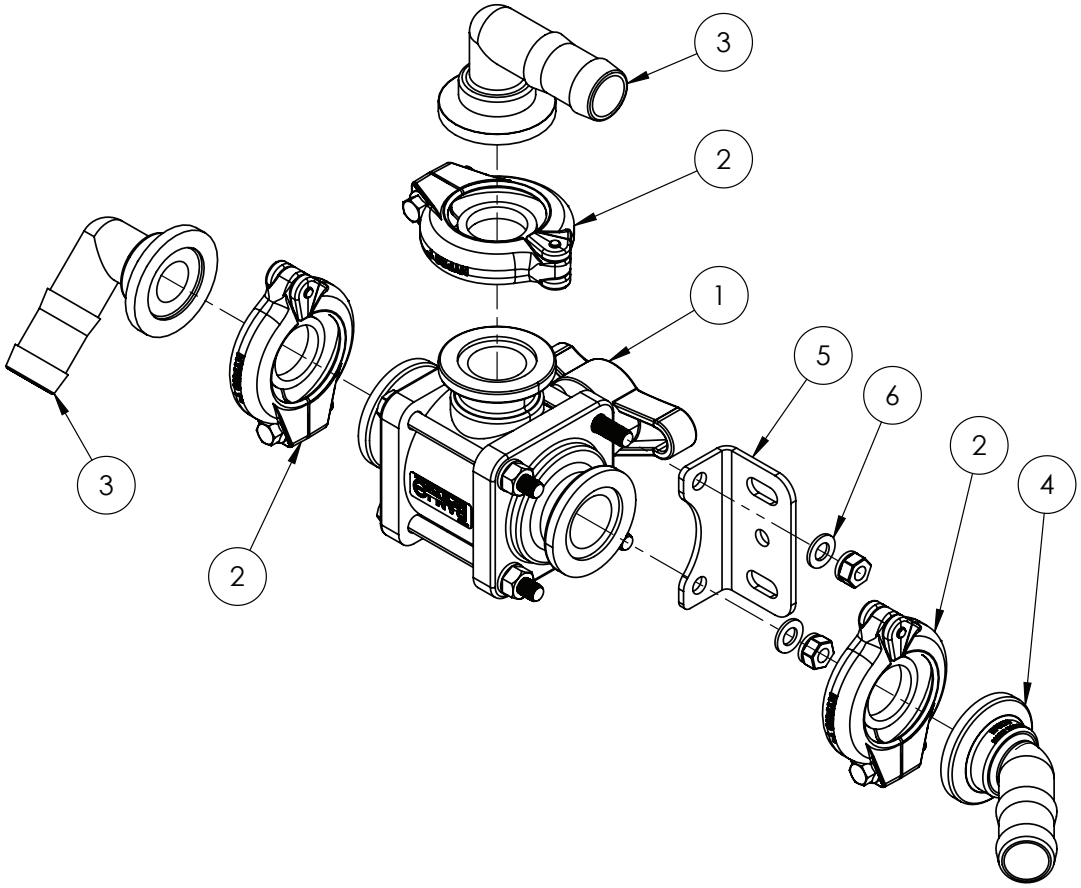

IF DESCRIPTION PREFIX IS ASSEMBLY DRAWING ONLY OR PRODUCTION DRAWING ONLY THE ITEM IS NOT FOR SALE			
ITEM	PART NUMBER	DESCRIPTION	QTY
1	GA5077901	BALL VALVE, 3 WAY, SIDE LOAD, 1" FLANGES, T HANDLE, MV100SL, BANJO	1
2	GA2000113	FLANGE CLAMP, AND GASKET, 1", SERIES 100, HYPRO	3
3	GA5077812	HOSE BARB, ELBOW, 90 DEGREE, 1 FLANGE X 1 HOSE, BANJO	2
4	GA5078650	HOSE BARB, 45 DEGREE, 1 FLANGE X 1 HOSE, BANJO, M100BRB45	1
5	GA4502210	PLATE - BALL VALVE MOUNTING	1
6	GA5003643	WASHER 8mm FLAT SS HD	2
GA4949505 GOLDACRES		ASSEMBLY DRAWING ONLY, VALVE, CHEMICAL PUMP OUTLET SELECTOR, G6 MY20	REV 01

Fill, 3” Manual Fill Manifold Assembly & Mounting, LH Pod

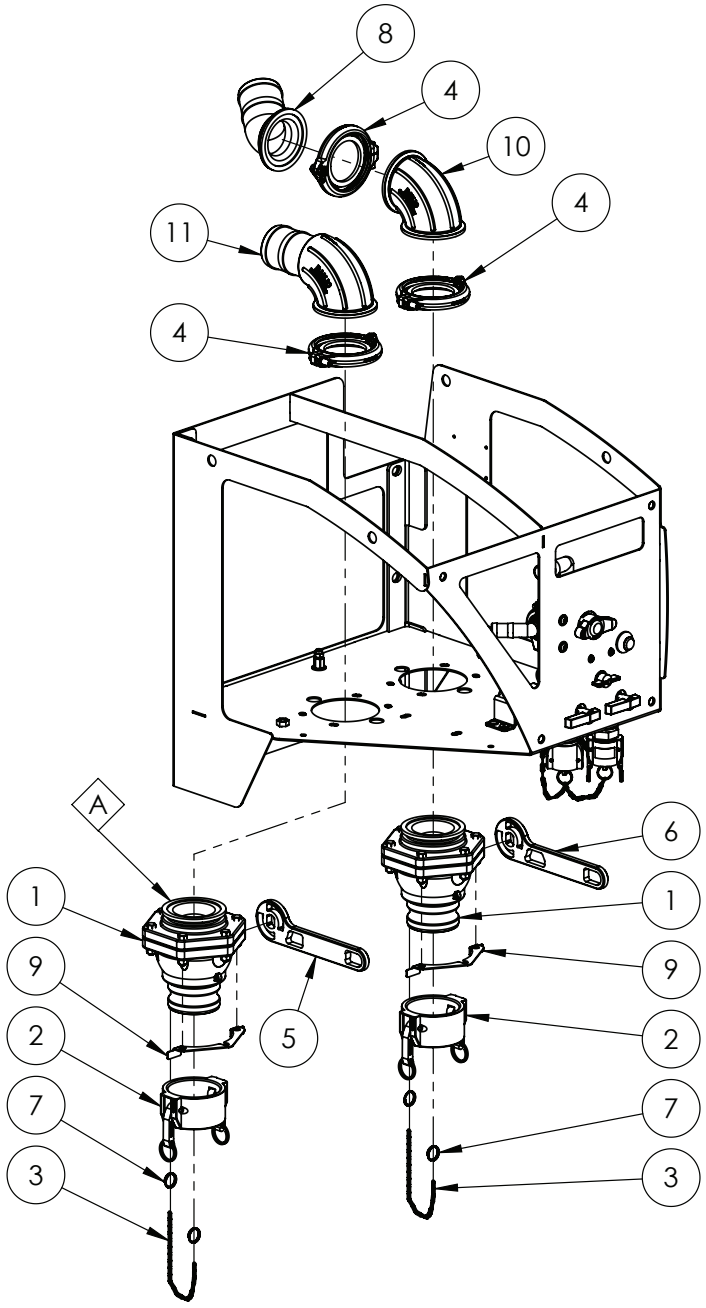

REPLACEMENT PARTS			
ITEM	PART NUMBER	DESCRIPTION	QTY
A	GA2000301	REPAIR KIT, BALL VALVE 3", SUIT GA2000119 & GA2000122, BANJO, VS35200	-

IF DESCRIPTION PREFIX IS ASSEMBLY DRAWING ONLY OR PRODUCTION DRAWING ONLY THE ITEM IS NOT FOR SALE			
ITEM	PART NUMBER	DESCRIPTION	QTY
1	GA2000122	BALL VALVE, 3" FLANGE TO 3" MALE CAMLOCK, MVSF300FP, BANJO	2
2	GA5076719	CAM LEVER, 3" FEMALE CAP, BANJO	2
3	GA4912615	CHAIN 2 X 20 mm SS 316, 146102, CUT 20 LINKS, GA5001491	2
4	GA2000116	FLANGE CLAMP, AND GASKET, 3", SERIES 300, HYPRO	3
5	GA4406155	HANDLE, 3" BALL VALVE, PLUMBING POD, "CLEAN", G6 MY20	1
6	GA4406150	HANDLE, 3" BALL VALVE, PLUMBING POD, "DIRTY", G6 MY20	1
7	GA5002077	KEY RING, 25mm, SS	4
8	GA5077874	MANIFOLD HOSE BARB 3", 45 DEGREE, M300BRB45	1
9	GA4412695	PLATE, VALVE STOP, 3", STUBBY, BANJO, MVS300CFFP, HOPPER	2
10	GA2000345	PLUMBING FITTING, SWEPT ELBOW, 90, 3", M300 FLANGE, M300SWP90, BANJO	1
11	GA2000148	PLUMBING FITTING, 3" FLANGE TO 3" BARB, SWEPT ELBOW, BANJO, M300BRBSWP90	1
GA4954225-03 GOLDACRES		ASSEMBLY DRAWING ONLY, FILL POD ASSEMBLY, LARGE FRAME SP, SERIES 3	REV 00

Chemical Pump & Wash Down Gun Pump Mounting, LH Pod

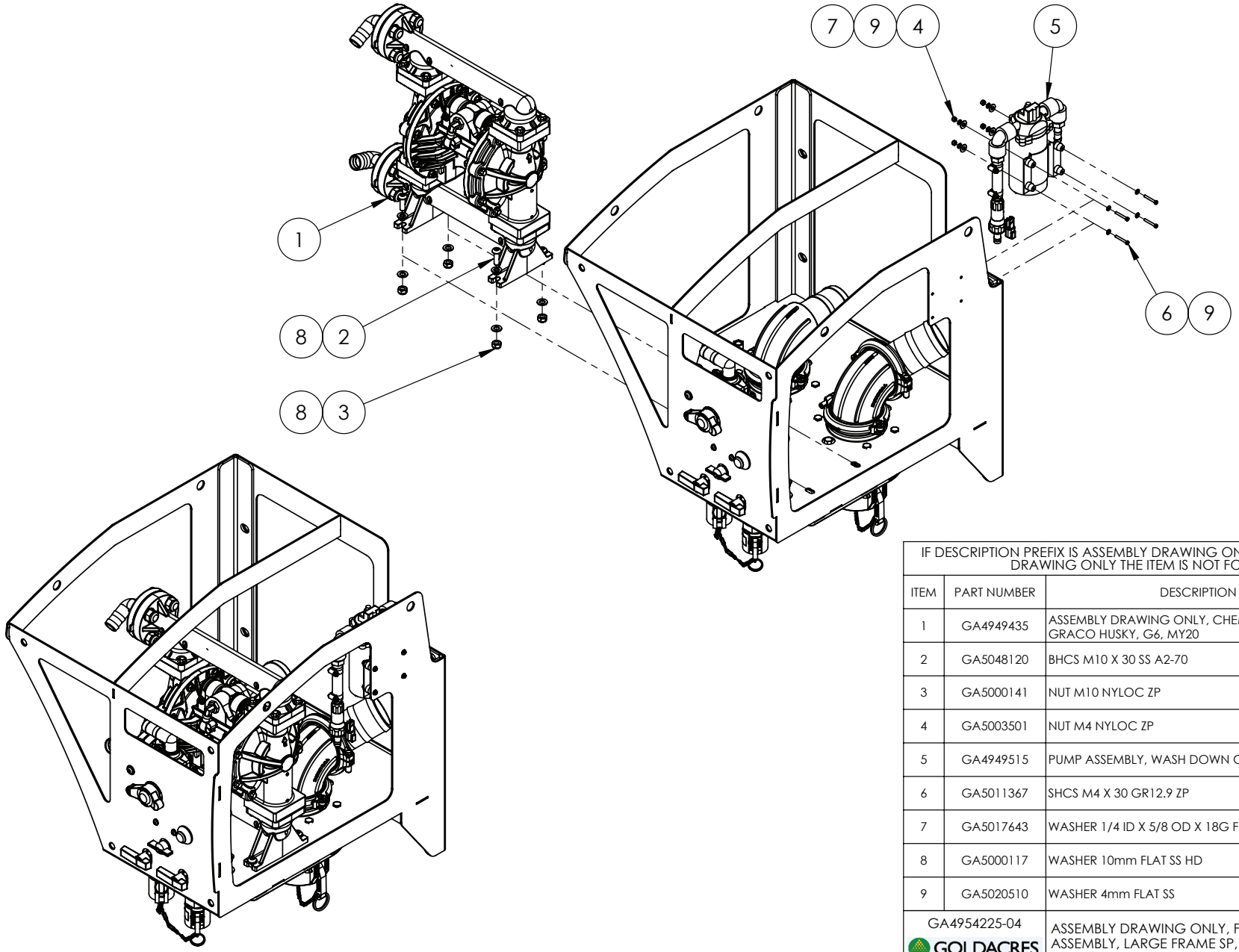

IF DESCRIPTION PREFIX IS ASSEMBLY DRAWING ONLY OR PRODUCTION DRAWING ONLY THE ITEM IS NOT FOR SALE			
ITEM	PART NUMBER	DESCRIPTION	QTY
1	GA4949435	ASSEMBLY DRAWING ONLY, CHEMICAL PUMP, GRACO HUSKY, G6, MY20	1
2	GA5048120	BHCS M10 X 30 SS A2-70	4
3	GA5000141	NUT M10 NYLOC ZP	4
4	GA5003501	NUT M4 NYLOC ZP	4
5	GA4949515	PUMP ASSEMBLY, WASH DOWN GUN, G6 MY20	1
6	GA5011367	SHCS M4 X 30 GR12.9 ZP	4
7	GA5017643	WASHER 1/4 ID X 5/8 OD X 18G FLAT SS	4
8	GA5000117	WASHER 10mm FLAT SS HD	8
9	GA5020510	WASHER 4mm FLAT SS	8
GA4954225-04 GOLDACRES		ASSEMBLY DRAWING ONLY, FILL POD ASSEMBLY, LARGE FRAME SP, SERIES 3	REV 00

Chemical Pump Assembly, Graco

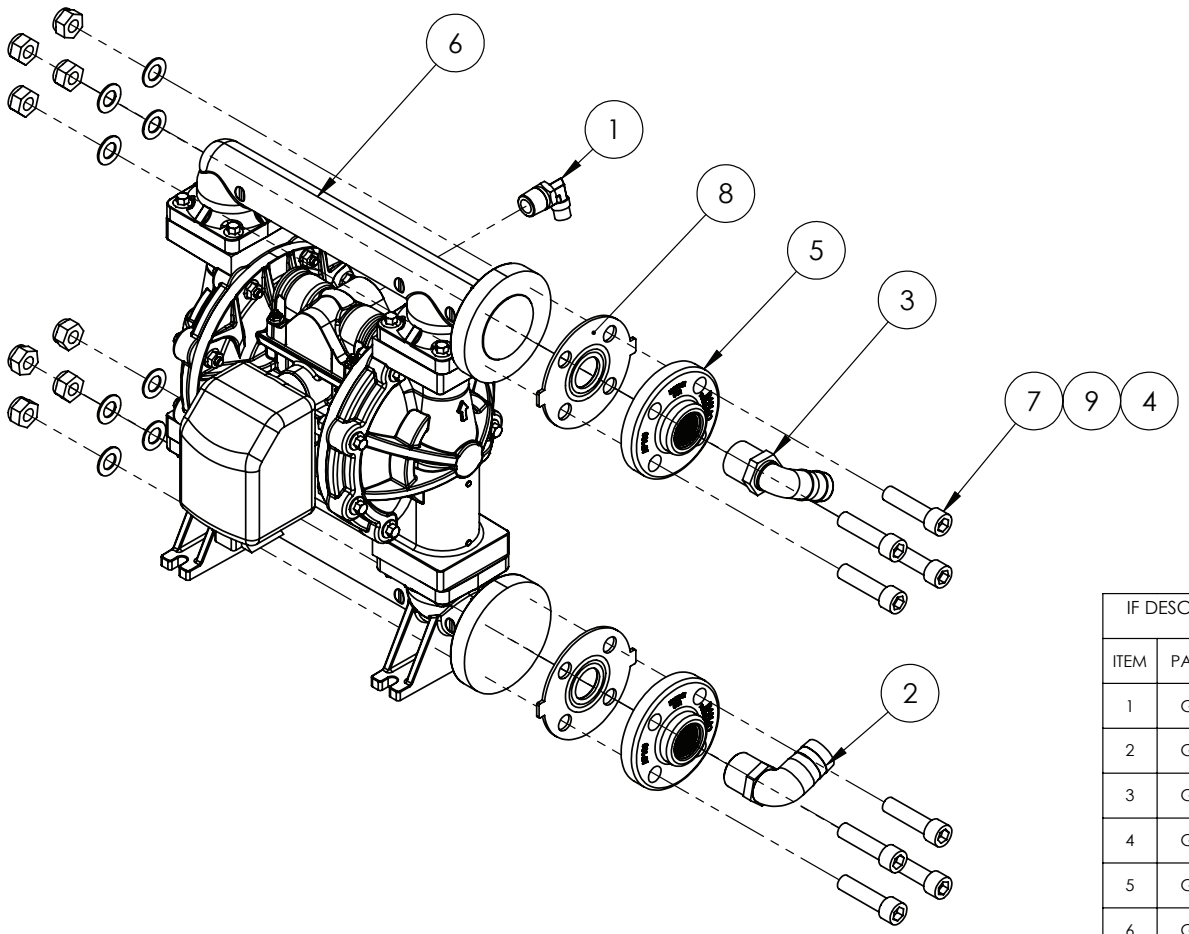

IF DESCRIPTION PREFIX IS ASSEMBLY DRAWING ONLY OR PRODUCTION DRAWING ONLY THE ITEM IS NOT FOR SALE			
ITEM	PART NUMBER	DESCRIPTION	QTY
1	GA5078524	AIR FITTING, ELBOW, SWIVEL, 3/8" TUBE, 1/2" NPT MALE, PUSH IN, BRASS, ALKON - AQ69-DOTS-6X8	1
2	GA5077720	HOSE BARB, ELBOW, 90 DEGREE, 1 MALE THREAD X 1 1/4 HOSE, BANJO	1
3	GA5077723	HOSE BARB, ELBOW, 90 DEGREE, 1" MALE X 1" HOSE, BANJO	1
4	GA5012427	NUT M14 NYLOC ZP	8
5	GA2000150	PLUMBING FITTING, ANSI FLANGE TO 1" FEMALE NPT THREAD, AF100, BANJO	2
6	GA2000152	PUMP, CHEMICAL TRANSFER, DIAPHRAGM, SIDE PORTED, GRACO HUSKY 1050P-	1
7	GA0500100	SHCS M14 X 55, ZP, GR 12.9	8
8	GA2000151	SEAL, 1" ANSI FLANGE, AF100G, BANJO	2
9	GA5050325	WASHER 14mm FLAT SS	8
GA4949435 GOLDACRES		ASSEMBLY DRAWING ONLY, CHEMICAL PUMP, GRACO HUSKY, G6, MY20	REV 01

Wash Down Pump Assembly

REPLACEMENT PARTS			
ITEM	PART NUMBER	DESCRIPTION	QTY
A	GA5071565	PRESSURE SWITCH, 45 PSI, SUIT 2088 SERIES SHURFLO 11.3LT PUMP	1

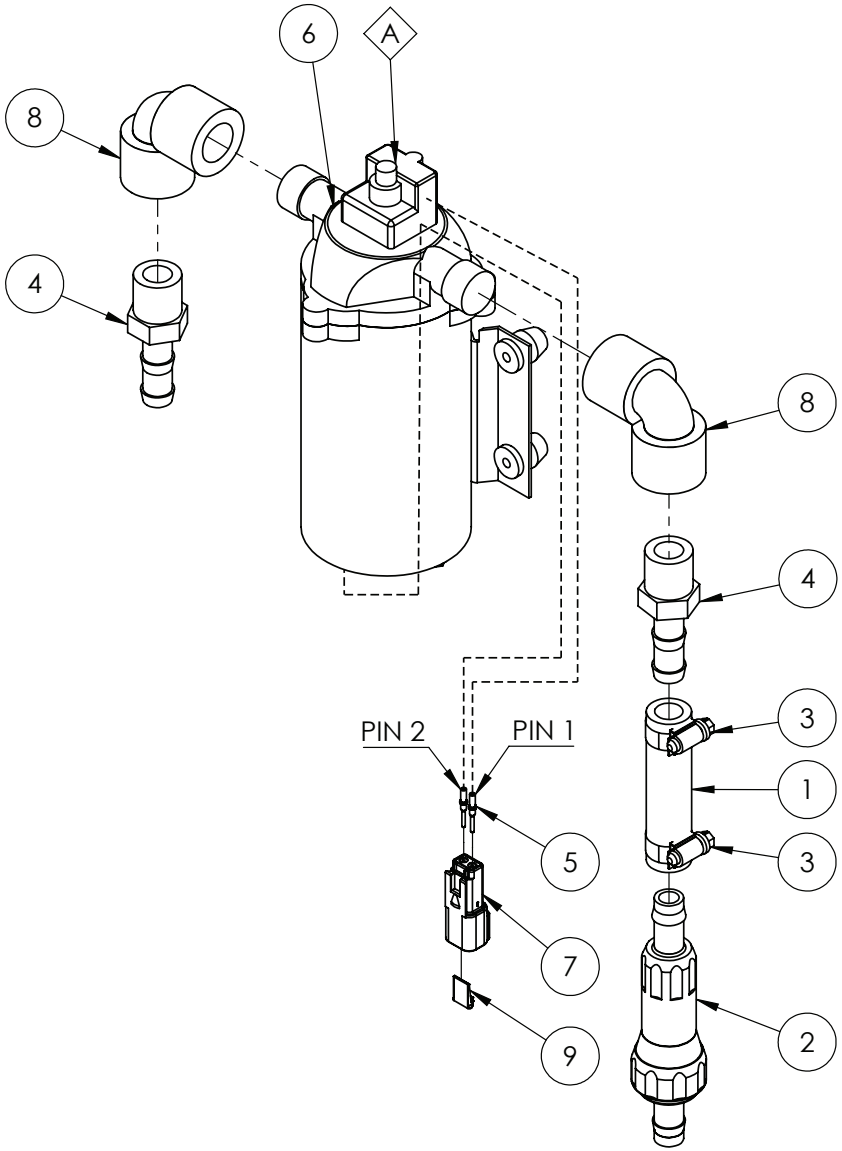

IF DESCRIPTION PREFIX IS ASSEMBLY DRAWING ONLY OR PRODUCTION DRAWING ONLY THE ITEM IS NOT FOR SALE			
ITEM	PART NUMBER	DESCRIPTION	QTY
1	GA2000286	12mm PRESSURE HOSE CUT 80mm, GA2000211	1
2	GA5008745	FILTER, INLINE, 1/2" HOSE BARBS	1
3	GA5000469	HOSE CLAMP, 1/2" SS 12-20/9W3	2
4	GA5077702	HOSE BARB, STRAIGHT, 1/2 MALE THREAD X 1/2 HOSE, BANJO, HB050	2
5	GA5061240	PIN, MALE, SOLID, NICKEL, NUMBER 16, GREEN BAND, AWG 14, DEUTSCH, 0460-215-16141	2
6	GA5023405	PUMP, 12 VOLT , 11.3LT/MIN MAX 45 PSI, SHURFLO	1
7	GA5052830	RECEPTACLE, 2 WAY, PINS, DT SERIES, DEUTSCH, DT04-2P	1
8	GA5077652	STREET ELBOW, 90 DEGREE, 1/2" FEMALE THREAD, BANJO	2
9	GA5052835	WEDGE LOCK, 2 WAY, DT SERIES, DEUTSCH	1
GA4949515 GOLDACRES		PUMP ASSEMBLY, WASH DOWN GUN, G6 MY20	REV 00

Chemical Pump Plumbing, LH Pod

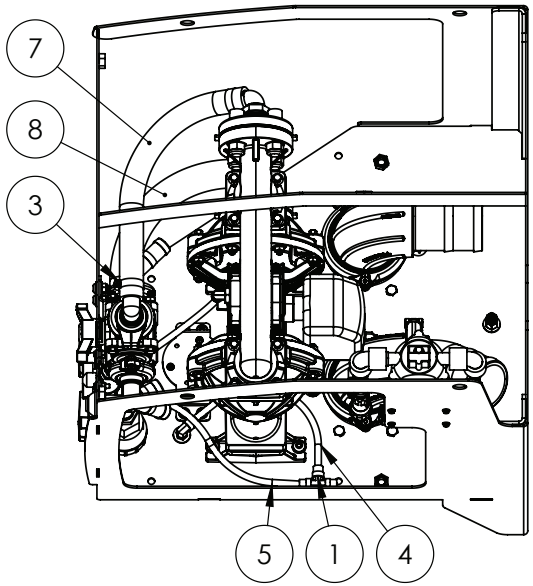

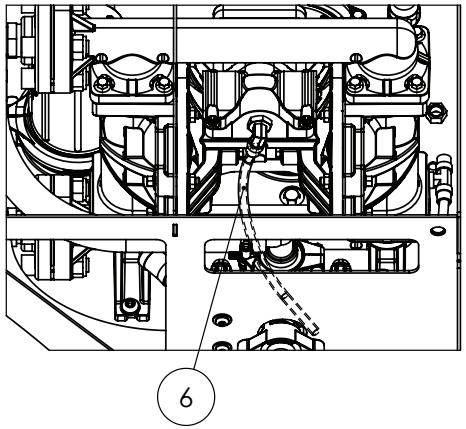

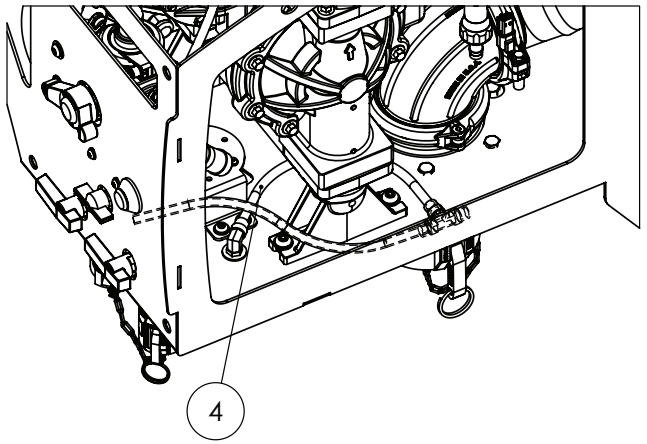

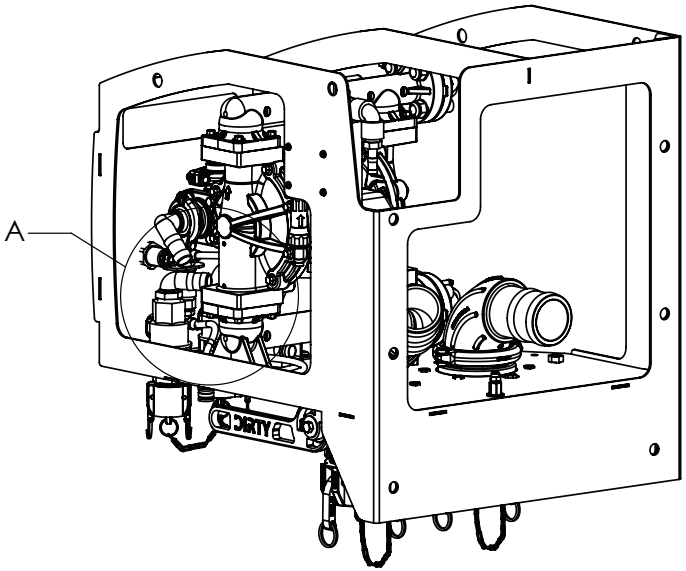

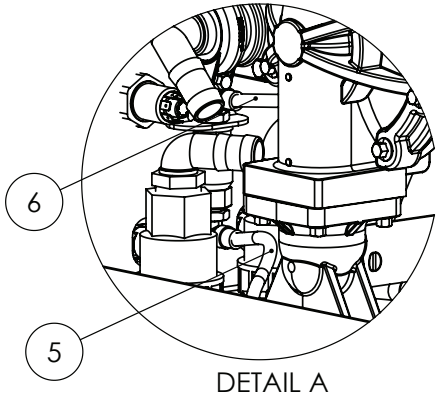

DETAIL A

NOTES:

ITEM (5) (4) (5) PNEUMATIC SCHEMATIC GA7500202

IF DESCRIPTION PREFIX IS ASSEMBLY DRAWING ONLY OR PRODUCTION DRAWING ONLY THE ITEM IS NOT FOR SALE			
ITEM	PART NUMBER	DESCRIPTION	QTY
1	GA5078516	AIR FITTING, TEE, 3/8" TUBE, PUSH IN, BRASS, ALKON - AQ64-DOT-6	1
2	GA5016813	HOSE CLAMP, 1 SS (25-40/12W)	2
3	GA5001681	HOSE CLAMP, 1" SS (20-32/12W)	2
4	GA7000016	HOSE, PNEUMATIC, 3/8", BLACK NYLON, ABT06, AIR BRAKE CORPORATION	0.3
5	GA7000016	HOSE, PNEUMATIC, 3/8", BLACK NYLON, ABT06, AIR BRAKE CORPORATION	0.33
6	GA7000016	HOSE, PNEUMATIC, 3/8", BLACK NYLON, ABT06, AIR BRAKE CORPORATION	0.27
7	GA2000219	HOSE, PRESSURE, 25mm, BLACK 250PSI, HOS25P, 100M ROLL	0.4
8	GA2000224	HOSE, SUCTION, 32mm, WIRE REINFORCED, HOS32S, 20M ROLL	0.42
GA4954225-05 GOLDACRES		ASSEMBLY DRAWING ONLY, FILL POD ASSEMBLY, LARGE FRAME SP, SERIES 3	REV 00

Chemical Pump Plumbing, LH Pod

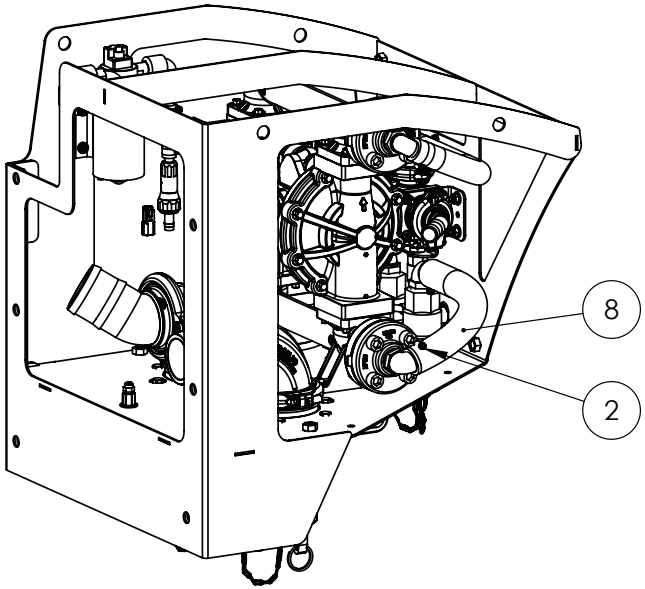

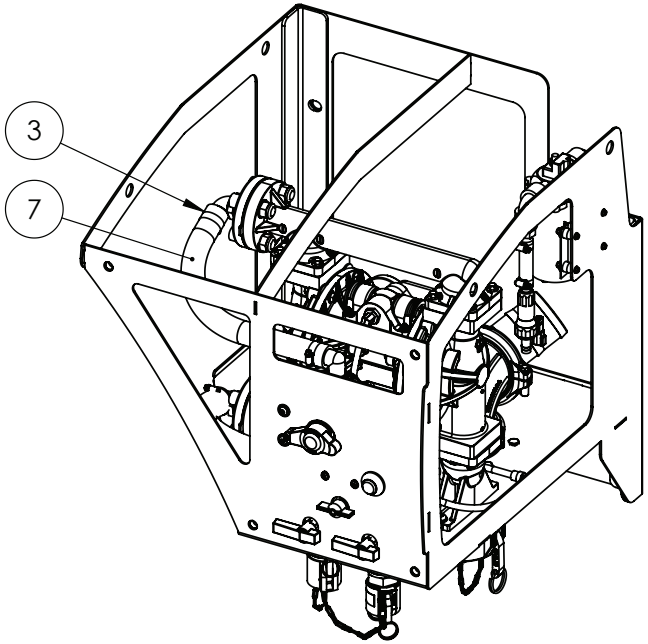

NOTE:

ITEM (7) (8) PLUMBING SCHEMATIC GA7500201

IF DESCRIPTION PREFIX IS ASSEMBLY DRAWING ONLY OR PRODUCTION DRAWING ONLY THE ITEM IS NOT FOR SALE			
ITEM	PART NUMBER	DESCRIPTION	QTY
1	GA5078516	AIR FITTING, TEE, 3/8" TUBE, PUSH IN, BRASS, ALKON - AQ64-DOT-6	1
2	GA5016813	HOSE CLAMP, 1 SS (25-40/12W)	2
3	GA5001681	HOSE CLAMP, 1" SS (20-32/12W)	2
4	GA7000016	HOSE, PNEUMATIC, 3/8", BLACK NYLON, ABT06, AIR BRAKE CORPORATION	0.3
5	GA7000016	HOSE, PNEUMATIC, 3/8", BLACK NYLON, ABT06, AIR BRAKE CORPORATION	0.33
6	GA7000016	HOSE, PNEUMATIC, 3/8", BLACK NYLON, ABT06, AIR BRAKE CORPORATION	0.27
7	GA2000219	HOSE, PRESSURE, 25mm, BLACK 250PSI, HOS25P, 100M ROLL	0.4
8	GA2000224	HOSE, SUCTION, 32mm, WIRE REINFORCED, HOS32S, 20M ROLL	0.42
GA4954225-05 GOLDACRES		ASSEMBLY DRAWING ONLY, FILL POD ASSEMBLY, LARGE FRAME SP, SERIES 3	REV 00

RH Pod, (Non-Hawkeye)

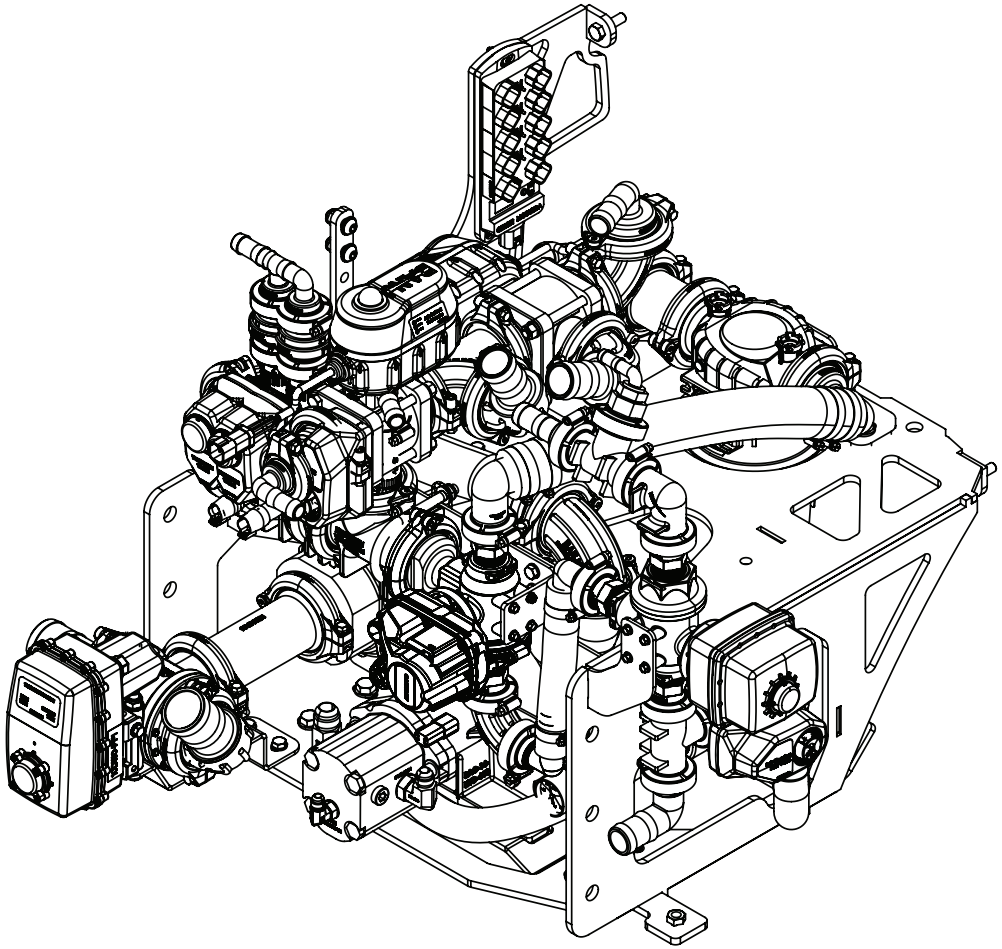

BUILD OPTIONS:
10061 - 3TS RAPID FIRE AND RAPID FLOW 250mm SPACING STAGGERED
10067 - 3TS RAPID FIRE WITH RAPID FLOW 250mm SPACING (STAGGERED) WITH TRIJETS ON TIER 1
10069 - 3TS RAPID FIRE WITH RAPID FLOW 250mm SPACING (STAGGERED) WITH TRIJETS ON TIERS 1 & 2
10072 - 3TS PRO WITH RAPID FIRE AND RAPID FLOW
65215 - PLUMBING STANDARD
65216 - PLUMBING PLUS
65217 - PLUMBING DUAL LINES
80110 - 1500L FRONT MOUNT TANK ADDITIONAL CAPACITY

GA6101850 GOLDACRES	SPRAY PUMP POD, CONFIGURABLE, SP SERIES 3	REV 01

Spray Pump & Suction Filter Mounting, RH Pod, (Non-Hawkeye)

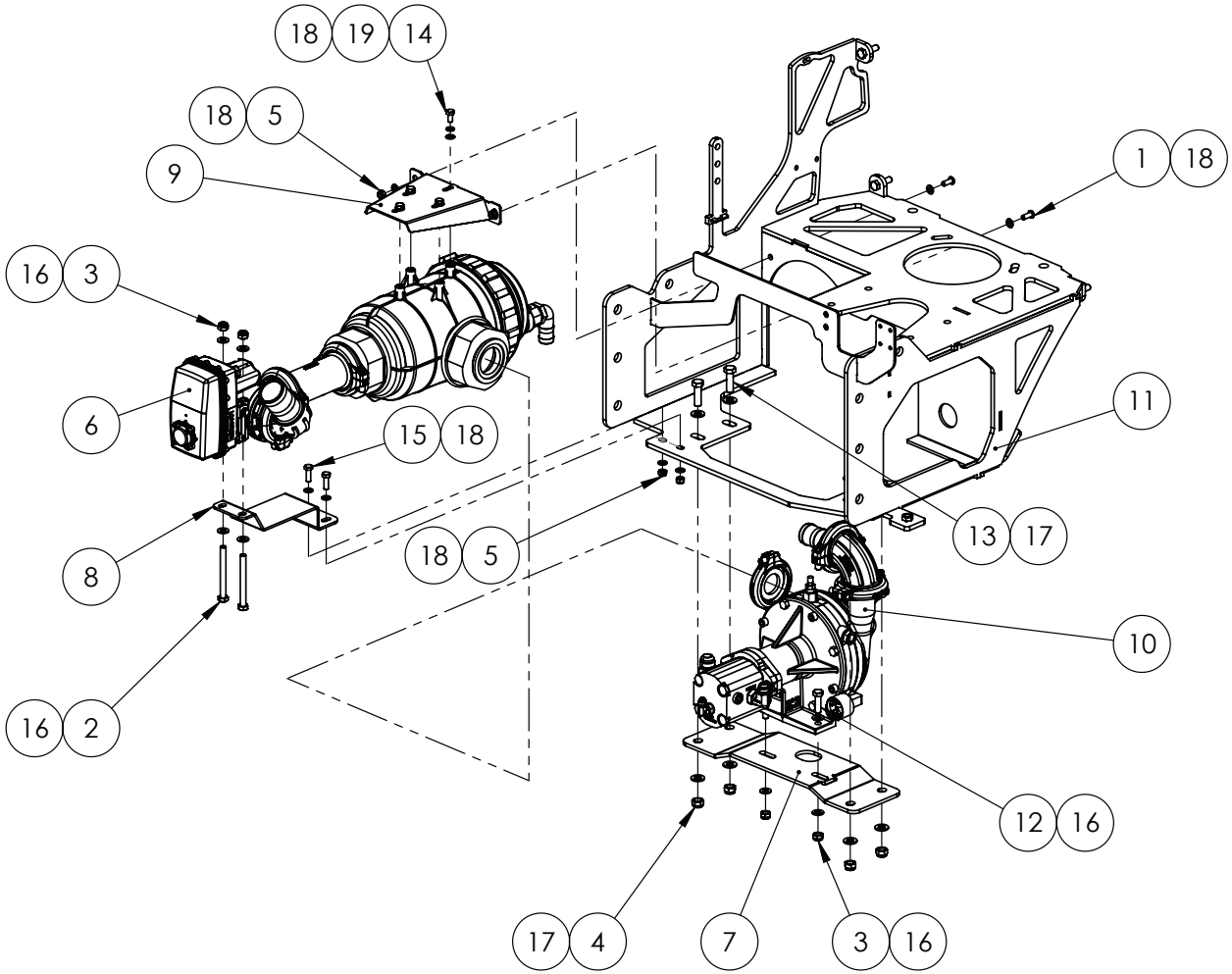

IF DESCRIPTION PREFIX IS ASSEMBLY DRAWING ONLY OR PRODUCTION DRAWING ONLY THE ITEM IS NOT FOR SALE			
ITEM	PART NUMBER	DESCRIPTION	QTY
1	GA0500102	BHCS M8 X 20 SS A2-70	2
2	GA5006091	BOLT M10 X 100 GR8.8 ZP	2
3	GA5000141	NUT M10 NYLOC ZP	4
4	GA5012461	NUT M12 NYLOC ZP	4
5	GA5004917	NUT M8 NYLOC ZP	4
6	GA4954075	PRODUCTION DRAWING ONLY, SPRAY PUMP SUCTION FILTER ASSEMBLY, SERIES 3	1
7	GA4415985	PLATE, ACE PUMP MOUNT, PUMP POD FRAME, SERIES 3 SP	1
8	GA4000029	PLATE, BALL VALVE MOUNT, SUCTION FILTER ASSEMBLY, SERIES 3 SP	1
9	GA4415875	PLATE, BRACKET, 3" SUCTION FILTER ARAG, MOUNT	1
10	GA4909494	PRODUCTION DRAWING ONLY, CENTRIFUGAL PUMP, 644 LPM, ACE PUMP ASSEMBLY	1
11	GA4604900	PUMP POD FRAME, SERIES 3, SELF PROPELLED	1
12	GA5006111	SET SCREW M10 X 35 GR8.8 ZP	2
13	GA5000319	SET SCREW M12 X 40 GR8.8 ZP	4
14	GA5011465	SET SCREW M8 X 16 GR8.8 ZP	4
15	GA5004713	SET SCREW M8 X 25 SS A2-70	2
16	GA5000117	WASHER M10 FLAT SS HD	8
17	GA5000577	WASHER M12 FLAT SS HD	8
18	GA5003643	WASHER M8 FLAT SS HD	12
19	GA5004919	WASHER M8 SPRING SS	4
GA6101850-01 GOLDACRES		SPRAY PUMP POD, CONFIGURABLE, SP SERIES 3	REV 00.A

Spray Pump Assembly, Centrifugal, ACE 650 Series, RH Pod

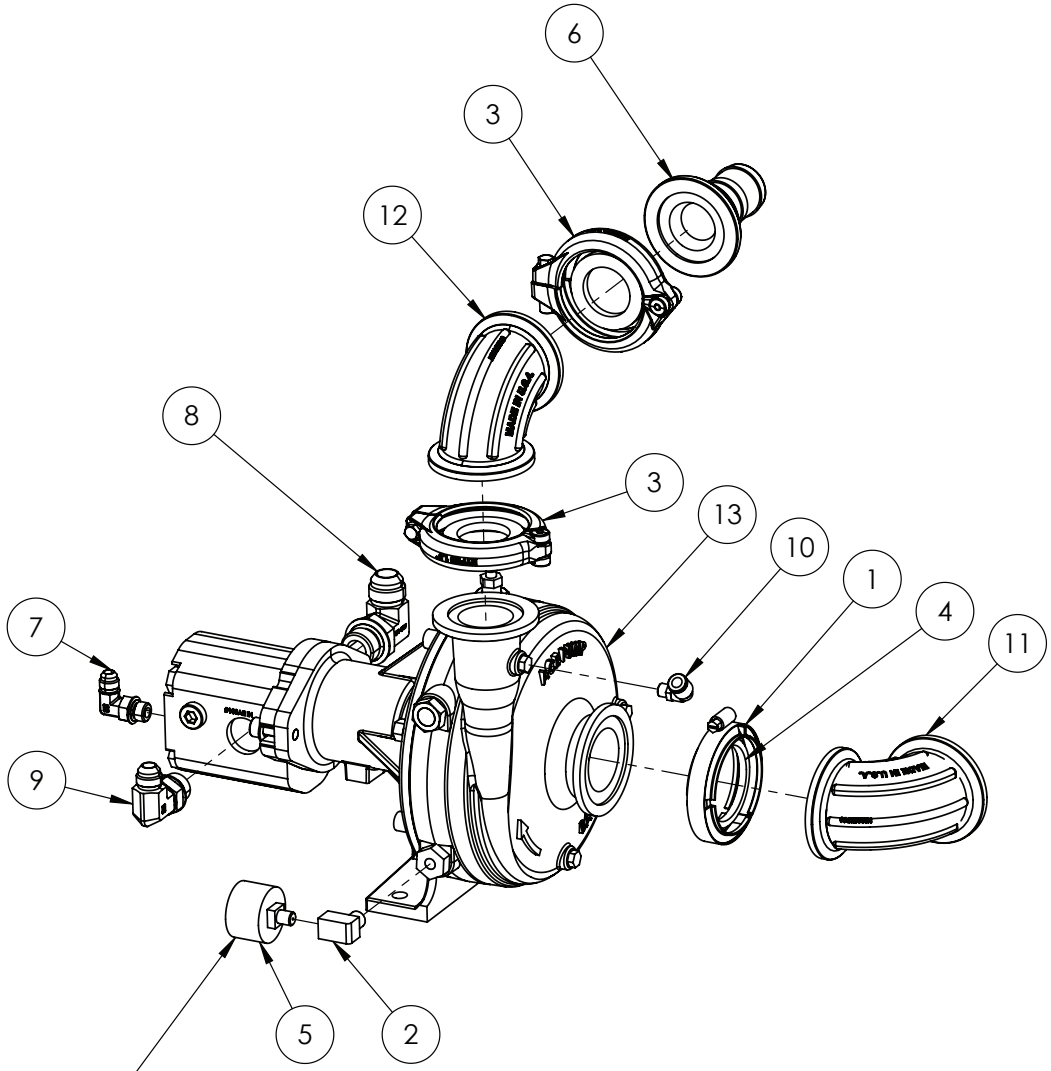

IF DESCRIPTION PREFIX IS ASSEMBLY DRAWING ONLY OR PRODUCTION DRAWING ONLY THE ITEM IS NOT FOR SALE			
ITEM	PART NUMBER	DESCRIPTION	QTY
1	FC220	2 FULL PORT WORM SCREW CLAMP	1
2	GA5025990	ELBOW, 90 DEGREE, 1/4" NPT MALE X 1/4" NPT FEMALE, BRASS	1
3	GA2000114	FLANGE CLAMP, AND GASKET, 1.5", SERIES 200, HYPRO	2
4	GA2000023	GASKET 2" BANJO SUIT 220	1
5	GA5026379	GAUGE, SUIT, ACE PUMP, 650 SERIES	1
6	GA5077833	HOSE BARB, FLANGE, STRAIGHT, 2 FLANGE X 1 1/2 HOSE, BANJO, M200150BRB	1
7	GA3500716	HYDRAULIC ADAPTOR ELBOW, 9/16" UNO TO 9/16" JIC, 90 DEG, S91-0909	1
8	GA3500715	HYDRAULIC ADAPTOR, ELBOW, 1 1/16" UNO TO 1 1/16" JIC, 90 DEG, S91-1717	1
9	GA3500761	HYDRAULIC ADAPTOR, ELBOW, 7/8" UNO TO 3/4" JIC, 90 DEG, S91-1214	1
10	GA5018339	PNEUMATIC FITTING, ELBOW, 90°, 8MM PUSH TYPE FITTING X 1/8' MALE THREAD	1
11	GA2000344	PLUMBING FITTING, SWEPT ELBOW, 90, 2", M220 FLANGE, M220SWP90, BANJO	1
12	GA2000434	PLUMBING FITTING, 2" FLANGED SWEEP ELBOW, 90	1
13	GA2000277	PUMP, CENTRIFUGAL, 644 LPM, OASIS RUN DRY SEAL, ACE	1
GA4909494 GOLDACRES		PRODUCTION DRAWING ONLY, CENTRIFUGAL PUMP, 644 LPM, ACE PUMP ASSEMBLY	REV 01

Suction Filter Assembly, Spray Pump, RH Pod

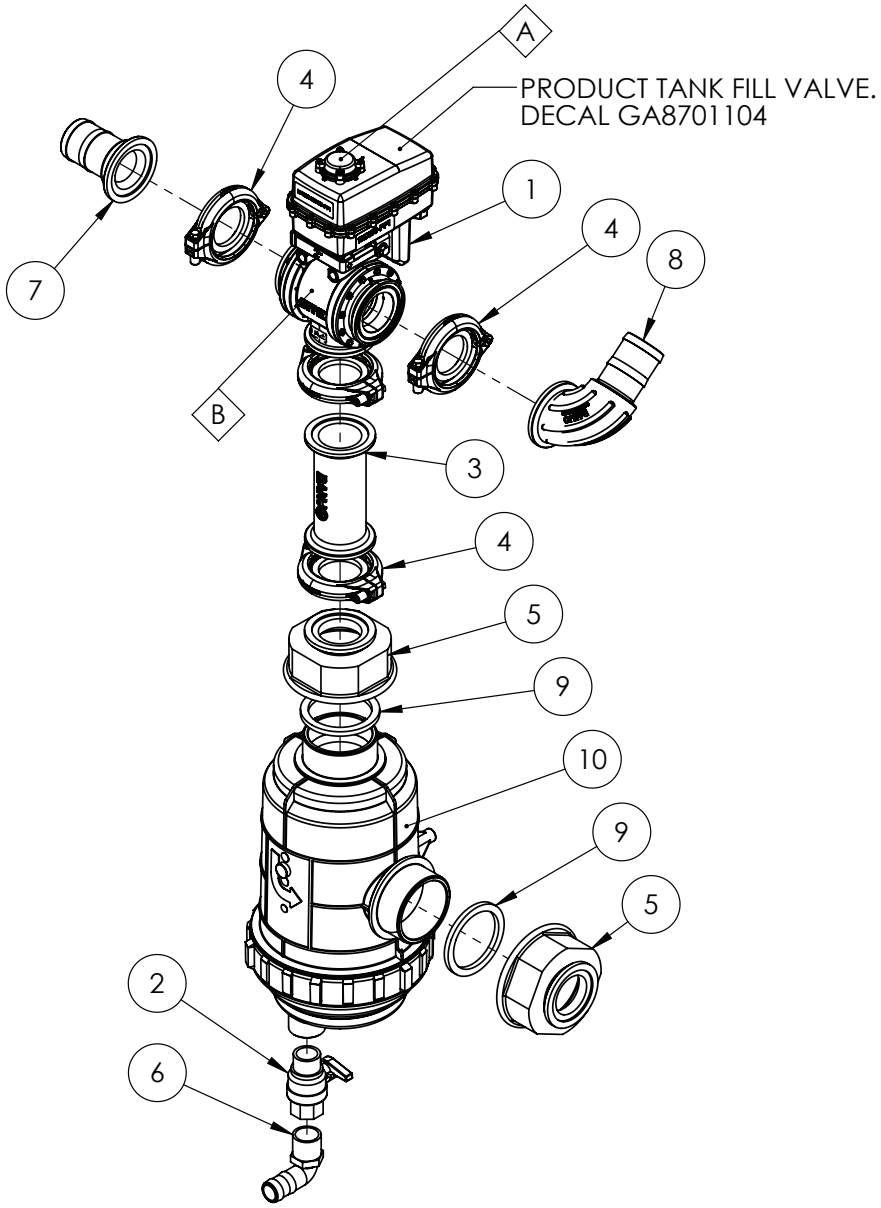

REPLACEMENT PARTS			
ITEM	PART NUMBER	DESCRIPTION	QTY
A	GA2000160	BALL VALVE, ACTUATOR ONLY, SUIT GA2000143, KZ VALVE	-
B	GA2000156	BALL VALVE, VALVE ONLY, SUIT GA2000143, KZ VALVE	-

IF DESCRIPTION PREFIX IS ASSEMBLY DRAWING ONLY OR PRODUCTION DRAWING ONLY THE ITEM IS NOT FOR SALE			
ITEM	PART NUMBER	DESCRIPTION	QTY
1	GA2000143	BALL VALVE, MOTORISED, 3 WAY, 2" FLANGE CONNECTION, BOTTOM LOAD ON/OFF/ON, 3 SECOND, KZ VALVE	1
2	GA5067620	BALL VALVE, 1" MALE / FEMALE, TEE HANDLE, BRASS	1
3	GA2000043	COUPLING, 2 X 2 FULL PORT FLANGE, 6", BANJO	1
4	GA2000115	FLANGE CLAMP, AND GASKET, 2", SERIES 220, HYPRO	4
5	GA4550450	FLANGE, M220 X 3" BSP FEMALE, PLASTIC	2
6	GA5077723	HOSE BARB, ELBOW, 90 DEGREE, 1" MALE X 1" HOSE, BANJO	1
7	GA5077859	HOSE BARB, STRAIGHT, 2 FLANGE X 2 HOSE, BANJO	1
8	GA2000071	PLUMBING FITTING, SWEEP ELBOW, 90, 2" FLANGE TO 2" BARB, M220BRBSWP90, BANJO	1
9	GA5076723	SEAL, EPDM, SUIT 3 FLANGE FITTING, BANJO, 300G	2
10	GA2000101	SUCTION FILTER, 3" 32 MESH, 3" BSP MALE THREADS, ARAG	1
GA4954075 GOLDACRES		SPRAY PUMP SUCTION FILTER ASSEMBLY, SERIES 3	REV 00

Control Valve, Mounting, RH Pod, (Non-Hawkeye)

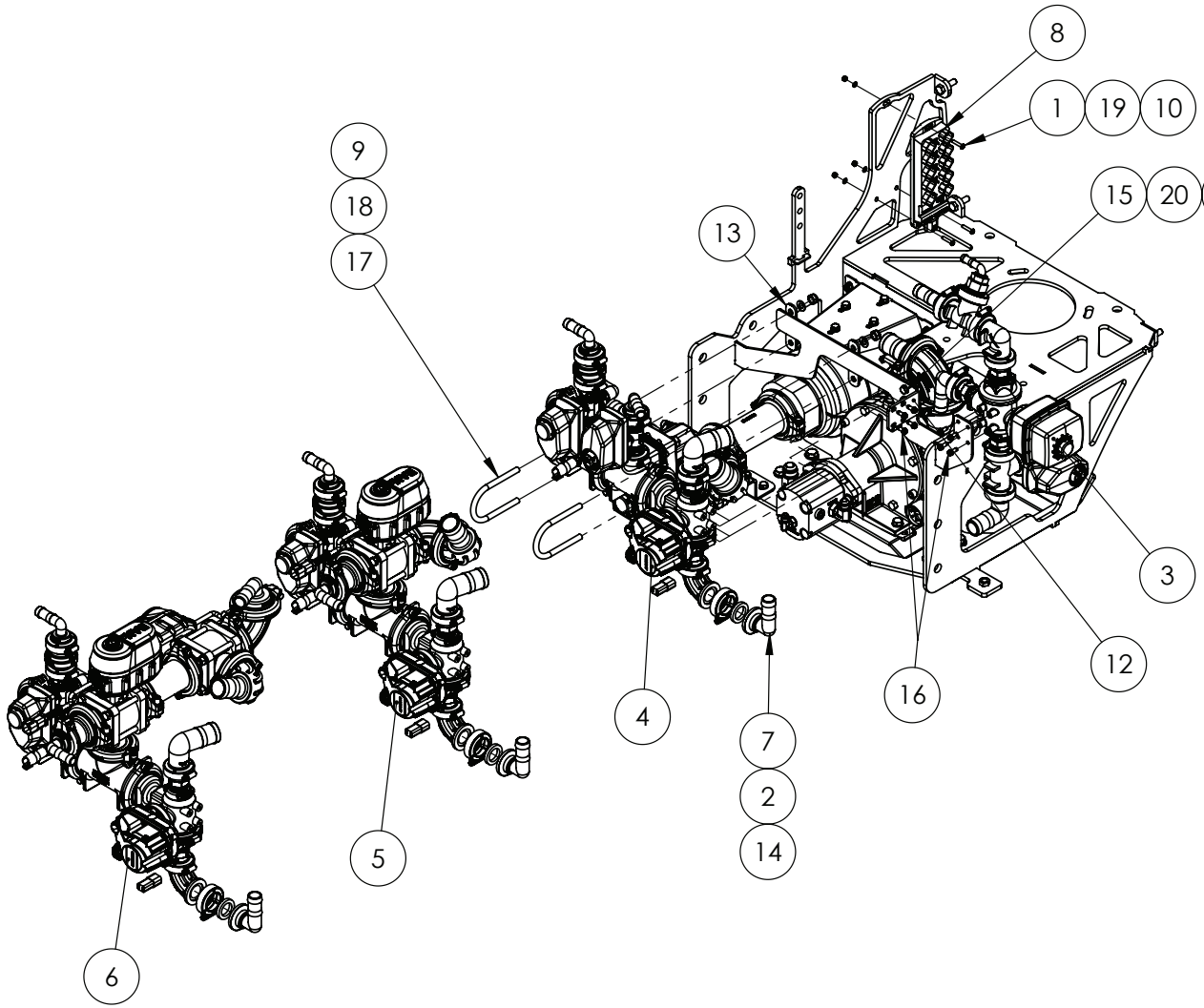

BUILD OPTIONS:

IF 65215 OR 65216 AND 80110 OPTIONED FIT ITEM (5)

IF 65215 OR 65216 OPTIONED FIT ITEMS (4)

IF 65217 OPTIONED FIT ITEM (6)

IF DESCRIPTION PREFIX IS ASSEMBLY DRAWING ONLY OR PRODUCTION DRAWING ONLY THE ITEM IS NOT FOR SALE			
ITEM	PART NUMBER	DESCRIPTION	QTY
1	GA0500178	BHCS M5 X 25 SS A2-70	3
2	GA5077664	CLAMP, WORM SCREW, 1", BANJO	1
3	GA4909496	CONTROL VALVE ASSEMBLY, HOPPER BYPASS, SERIES 3	1
4	GA4954070	CONTROL VALVE ASSEMBLY, 01, NO FRONT TANK	1
5	GA4909665	CONTROL VALVE ASSEMBLY, 02, WITH FRONT TANK	1
6	GA4909626	CONTROL VALVE ASSEMBLY, 03, PLUMBING DUAL LINES	1
7	GA5077812	HOSE BARB, ELBOW, 90 DEGREE, 1 FLANGE X 1 HOSE, BANJO	1
8	GA3000309	I/O MODULE, 16 OUTPUT CHANNELS, CR2051, IFM, MODULE A	1
9	GA5000141	NUT M10 NYLOC ZP	4
10	GA5003974	NUT M5 NYLOC ZP	3
11	GA5052590	NUT M8 NYLOC SS	2
12	GA4000679	PLATE, BOOM REGULATOR VALVE BRACKET 90 DEGREE	1
13	GA4000215	PLATE, U-BOLT BACKING PLATE, SERIES 3, SP	2
14	GA5077818	SEAL, SUIT 1 MANIFOLD FITTING, RUBBER EPDM, BANJO, M100G	1
15	GA5004713	SET SCREW M8 X 25 SS A2-70	2
16	GA0500022	SET SCREW SELF TAPPING TRILOBE M6 X 16 ZP	8
17	GA0500130	U BOLT, ROUND TOP, M10 X 60 X 111mm	2
18	GA5000117	WASHER M10 FLAT SS HD	4
19	GA5003983	WASHER M5 FLAT SS	3
20	GA5003643	WASHER M8 FLAT SS HD	4
GA6101850-02 GOLDACRES		SPRAY PUMP POD, CONFIGURABLE, SP SERIES 3	REV 01

Control Valve Assembly, Hopper Bypass, RH Pod

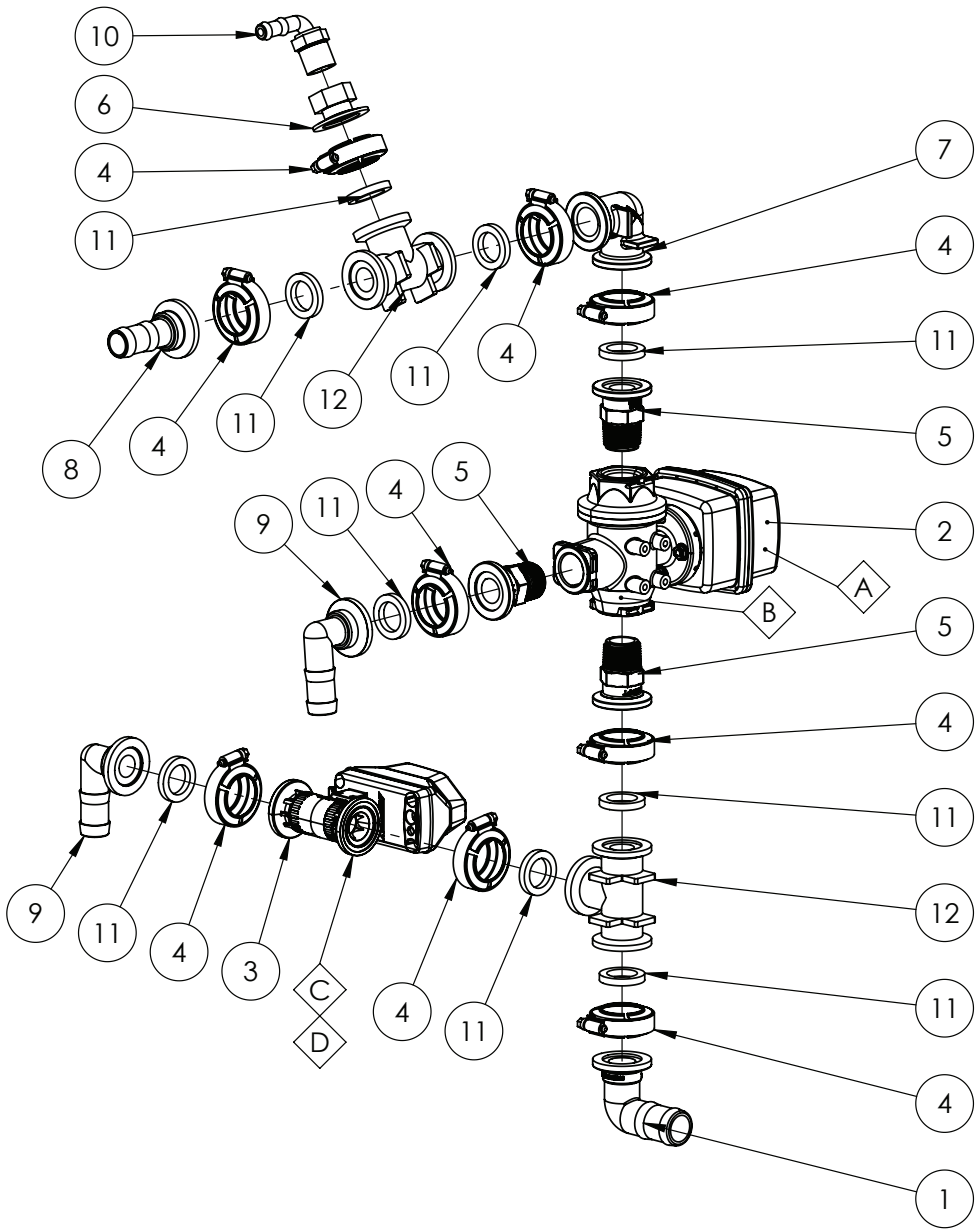

REPLACEMENT PARTS			
ITEM	PART NUMBER	DESCRIPTION	QTY
A	GA2000159	BALL VALVE, ACTUATOR ONLY, SUIT GA2000142, KZ VALVE	-
B	GA2000155	BALL VALVE, VALVE ONLY, SUIT GA2000142, KZ VALVE	-
C	GA2000154	BALL VALVE, VALVE ONLY, SUIT GA2000141, KZ VALVE	-
D	GA5026374	REPAIR KIT, VALVE, KZ, TX2, SUIT, GA2000141	-

IF DESCRIPTION PREFIX IS ASSEMBLY DRAWING ONLY OR PRODUCTION DRAWING ONLY THE ITEM IS NOT FOR SALE			
ITEM	PART NUMBER	DESCRIPTION	QTY
1	GA5077807	1" FLANGE X 1 1/4" BARB, ELBOW, 90 DEGREE, M100125BRB90	1
2	GA2000142	BALL VALVE, MOTORISED, 3 WAY, 1" THREADED PORTS, BOTTOM LOAD ON/OFF/ON, 0.8 SECONDS, KZ VALVE	1
3	GA2000141	BALL VALVE, MOTORIZED, 2 WAY, 1" FLANGE CONNECTION, 0.5 SECOND, KZ VALVE, TX2	1
4	GA5077664	CLAMP, WORM SCREW, 1", BANJO	9
5	GA5077820	COUPLING, FLANGED, 1 FLANGE X 1 MALE THREAD, BANJO	3
6	GA5077804	COUPLING, 1" FLANGE X 3/4" FEMALE THREAD, BANJO	1
7	GA5077815	ELBOW, 90 DEGREE, 1" FLANGE X 1" FLANGE, BANJO	1
8	GA5077811	HOSE BARB, STRAIGHT, 1 FLANGE X 1 HOSE, BANJO	1
9	GA5077812	HOSE BARB, ELBOW, 90 DEGREE, 1 FLANGE X 1 HOSE, BANJO	2
10	GA5077710	HOSE BARB, ELBOW, 90 DEGREE, 3/4 MALE THREAD X 1/2 HOSE, BANJO	1
11	GA5077818	SEAL, SUIT 1 MANIFOLD FITTING, RUBBER EPDM, BANJO, M100G	9
12	GA5077823	TEE, 1 FLANGE X 1 FLANGE X 1 FLANGE, BANJO, M100TEE	2
GA4909496 GOLDACRES		CONTROL VALVE ASSEMBLY, HOPPER BYPASS, SERIES 3	REV 00.B

Control Valve, Plumbing Standard, No Front Mount Tank, RH Pod

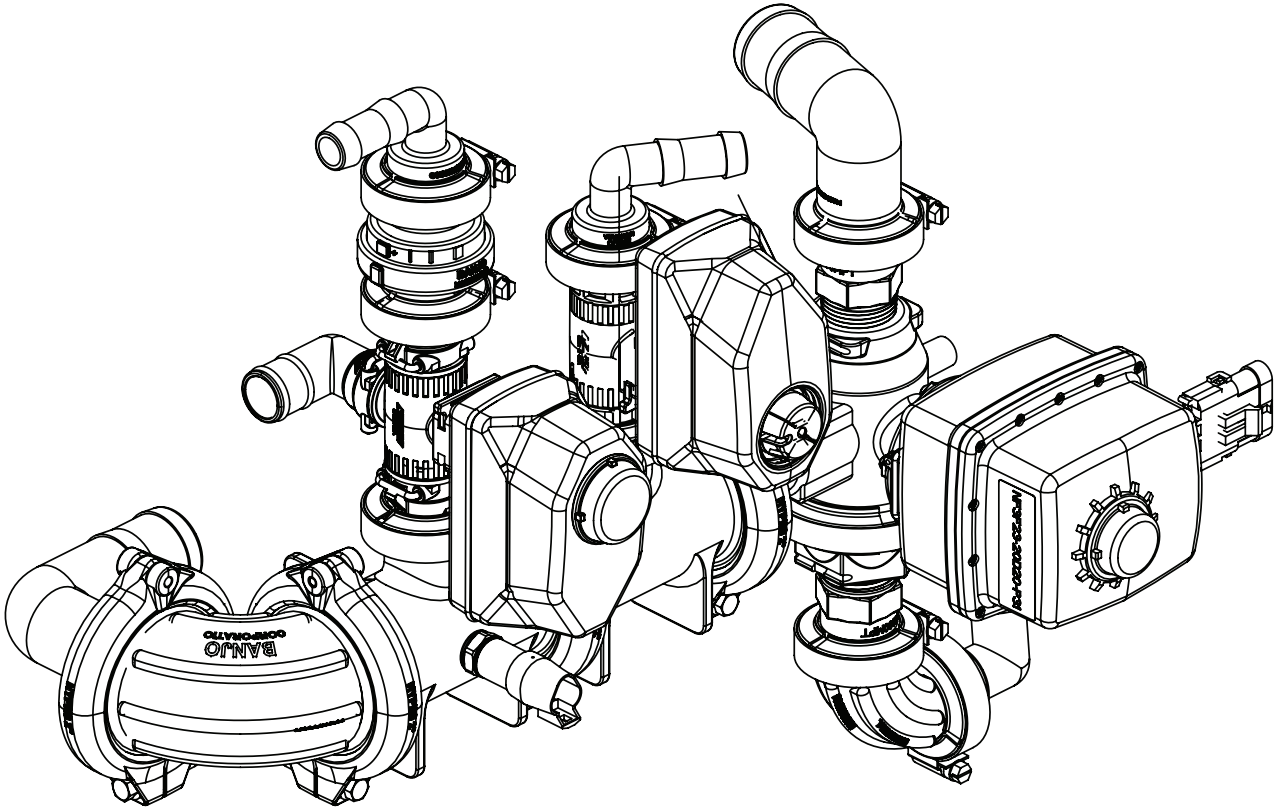

GA4954070	CONTROL VALVE ASSEMBLY, 01, NO FRONT TANK	REV
GOLDACRES		00.G

Control Valve Assembly, Plumbing Standard, No Front Mount Tank, RH Pod

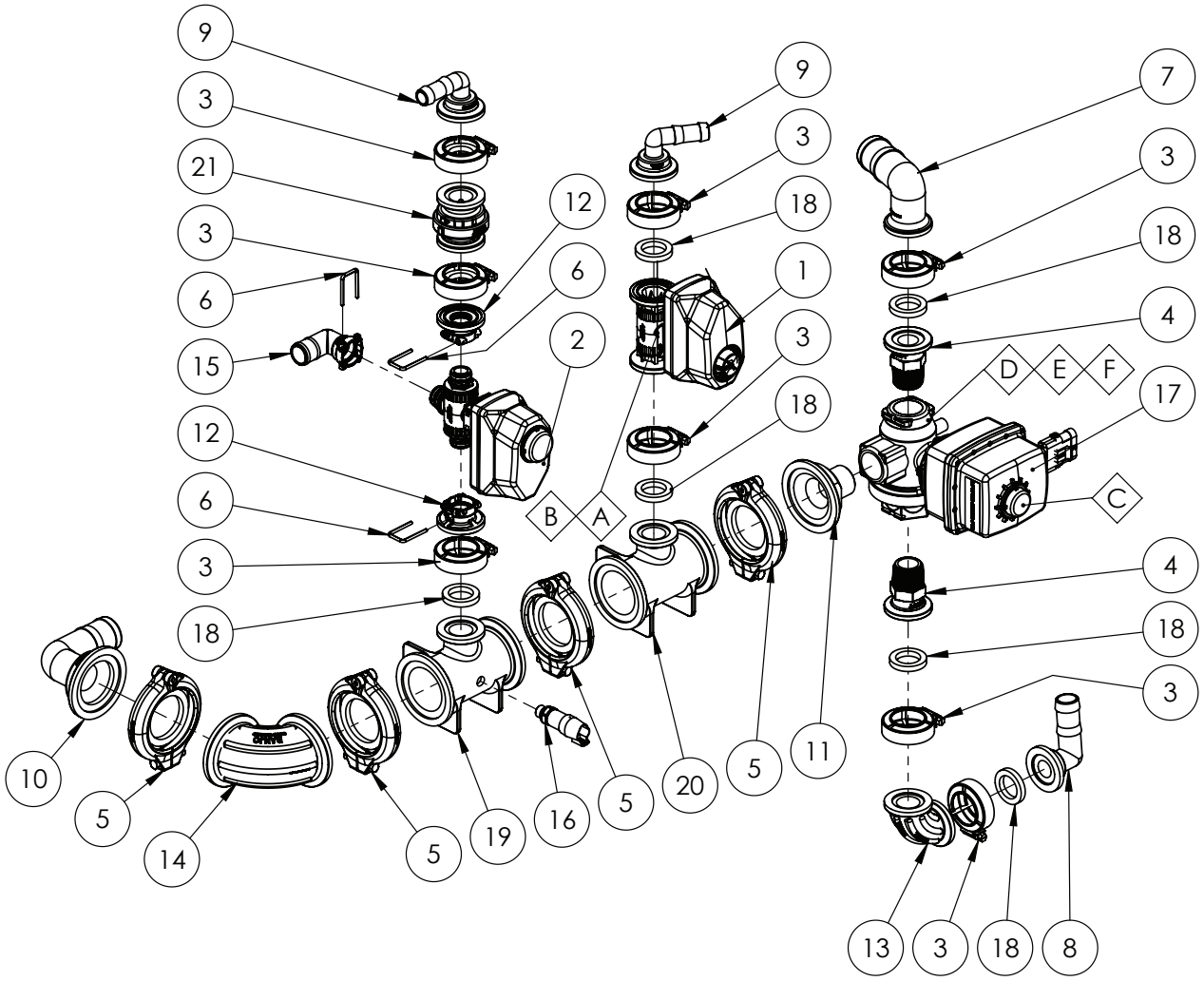

REPLACEMENT PARTS			
ITEM	PART NUMBER	DESCRIPTION	QTY
A	GA2000154	BALL VALVE, VALVE ONLY, SUIT GA2000141, KZ VALVE	-
B	GA5026374	REPAIR KIT, VALVE, KZ, TX2, SUIT, GA2000141	-
C	GA2000066	REGULATOR VALVE, ACTUATOR ONLY, 0.8 SEC 12V, SUIT GA2000065, KZ VALVE	-
D	GA2000067	REGULATOR VALVE, VALVE ONLY, SUIT GA2000065, KZ VALVE	-
E	GA4953975	BUTTRESS ASSEMBLY, SUIT, KZ VALVE, INCLUDES O-RINGS, 800562, SUITS GA2000067, GA2000065	-
F	GA4953970	O-RING, SUIT, KZ VALVE, END CAP, #229, EPDM, QC3-134, SUITS GA2000067, GA2000065	-

IF DESCRIPTION PREFIX IS ASSEMBLY DRAWING ONLY OR PRODUCTION DRAWING ONLY THE ITEM IS NOT FOR SALE			
ITEM	PART NUMBER	DESCRIPTION	QTY
1	GA2000141	BALL VALVE, MOTORIZED, 2 WAY, 1" FLANGE CONNECTION, 0.5 SECOND, KZ VALVE, TX2	1
2	GA2000634	BALL VALVE, MOTORIZED, 3 WAY, 1/2", PIN PONNECTION, KZ VALVE, EH7	1
3	GA5077664	CLAMP, WORM SCREW, 1", BANJO	8
4	GA5077820	COUPLING, FLANGED, 1 FLANGE X 1 MALE THREAD, BANJO	2
5	GA2000115	FLANGE CLAMP, AND GASKET, 2", SERIES 220, HYPRO	4
6	GA2000625	HAIRPIN, TO SUIT TX2 VALVE, 1/2 ", 106-0018	3
7	GA2000138	HOSE BARB, ELBOW, 90 DEGREE, 1" FLANGE, X 1 1/2" HOSE, BANGO M100150BRB90	1
8	GA5077812	HOSE BARB, ELBOW, 90 DEGREE, 1 FLANGE X 1 HOSE, BANJO	1
9	GA5077803	HOSE BARB, ELBOW, 90 DEGREE, 1 FLANGE X 3/4 HOSE, BANJO, M100075BRB90	2
10	GA5077856	HOSE BARB, 2" FP FLANGE, 1-1/2" HB, 90 DEGREE	1
11	GA4551165	PLUMBING COUPLING, M220 FLANGE TO 1" MALE NPT THREAD	1
12	GA2000636	PLUMBING FITTING, M100 FLANGE X PIN CONNECTION, KZ	2
13	GA5026057	PLUMBING FITTING, SWEPT ELBOW, 90, 1", M100 FLANGE, M100SWP90, BANJO	1
14	GA2000344	PLUMBING FITTING, SWEPT ELBOW, 90, 2", M220 FLANGE, M220SWP90, BANJO	1
15	GA2000606	PLUMBING FITTING, 1" ELBOW, HOSE BARB X FEMALE QD, 211-0119, KZ VALVE	1
16	GA3000316	PRESSURE SENSOR TRANSDUCER, 0-25 BAR, 0.5-4.5V, IFM	1
17	GA2000069	REGULATOR VALVE, 1" NPT, FULL PORT, 3 WAY, 0.8 SEC 12V, KZ VALVE	1
18	GA5077818	SEAL, SUIT 1 MANIFOLD FITTING, RUBBER EPDM, BANJO, M100G	8
19	GA2000569	TEE, 2" FULL PORT X 1", W/ 1/4" BSP FEMALE THREAD, FLANGE, M220100TEEC1, BANJO	1
20	GA2000046	TEE, 2" FULL PORT X 2" FULL PORT X 1", FLANGE, BANJO	1
21	GA5077889	VALVE, CHECK, 1" MANIFOLD, FLANGE, BANJO, MCV100	1
GA4954070 GOLDACRES		CONTROL VALVE ASSEMBLY, 01, NO FRONT TANK	REV 00.G

Control Valve, Standard Plumbing & Plumbing Plus, RH Pod

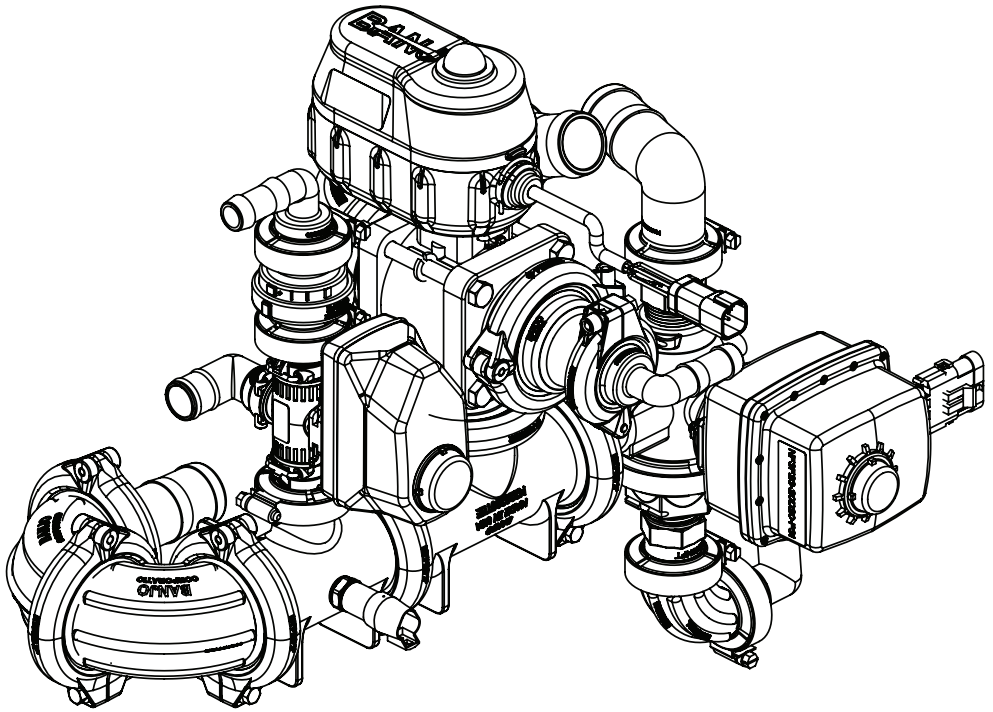

GA4909665 GOLDACRES	CONTROL VALVE ASSEMBLY, 02, WITH FRONT TANK	REV 00

Control Valve Assembly, Standard Plumbing & Plumbing Plus, RH Pod

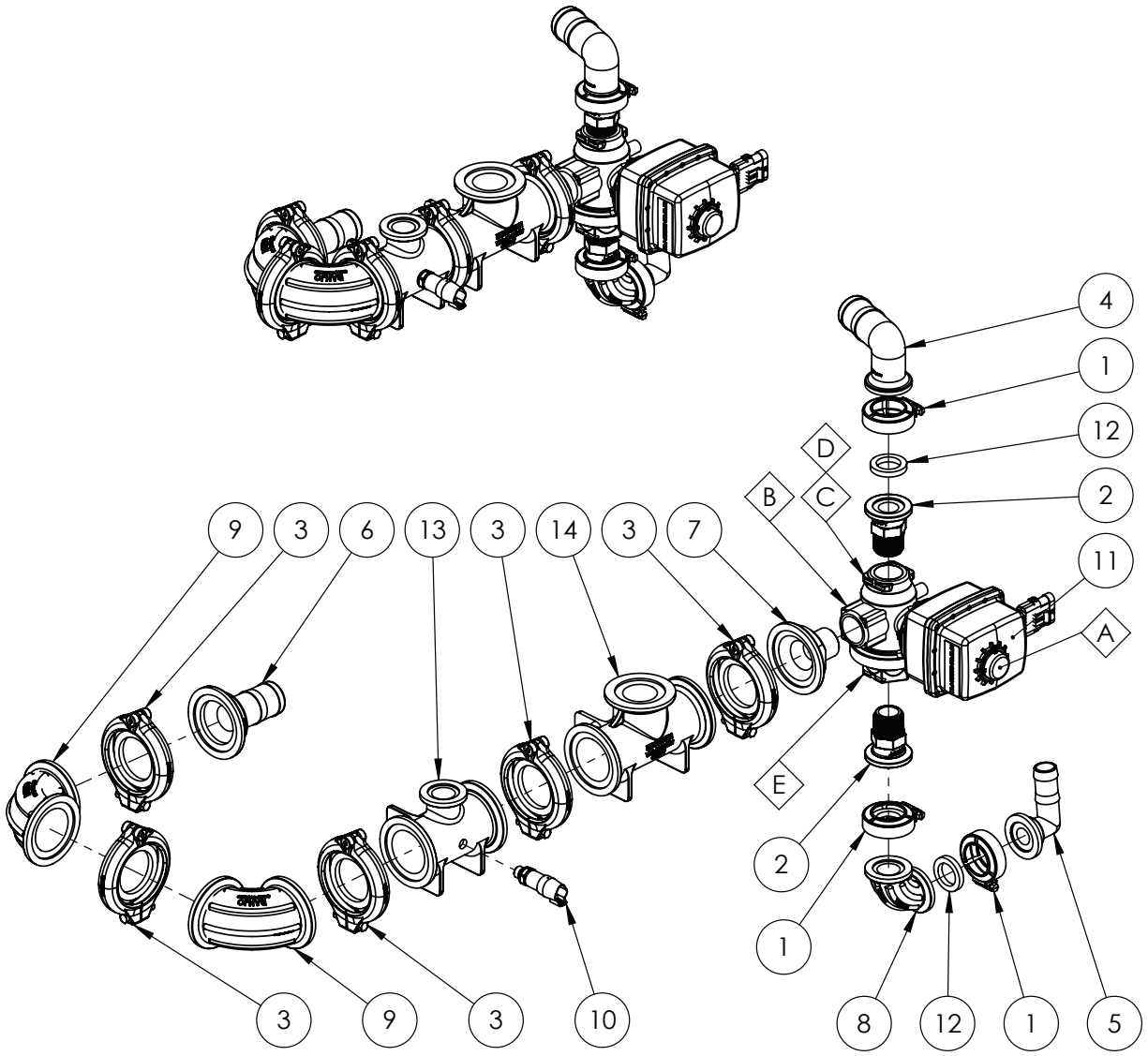

REPLACEMENT PARTS			
ITEM	PART NUMBER	DESCRIPTION	QTY
A	GA2000066	REGULATOR VALVE, ACTUATOR ONLY, 0.8 SEC 12V, SUIT GA2000065, KZ VALVE	-
B	GA2000067	REGULATOR VALVE, VALVE ONLY, SUIT GA2000065, KZ VALVE	-
C	GA5073805	FITTING, 2" HEX, 1" FNPT, KZ VALVE, QX4-127-N, SUITS GA2000067, GA2000065	-
D	GA4953970	O-RING, SUIT, KZ VALVE, END CAP, #229, EPDM, QC3-134, SUITS GA2000067, GA2000065	-
E	GA4953975	BUTTRESS ASSEMBLY, SUIT, KZ VALVE, INCLUDES O-RINGS, 800562, SUITS GA2000067, GA2000065	-

IF DESCRIPTION PREFIX IS ASSEMBLY DRAWING ONLY OR PRODUCTION DRAWING ONLY THE ITEM IS NOT FOR SALE			
ITEM	PART NUMBER	DESCRIPTION	QTY
1	GA5077664	CLAMP, WORM SCREW, 1", BANJO	3
2	GA5077820	COUPLING, FLANGED, 1 FLANGE X 1 MALE THREAD, BANJO	2
3	GA2000115	FLANGE CLAMP, AND GASKET, 2", SERIES 220, HYPRO	5
4	GA2000138	HOSE BARB, ELBOW, 90 DEGREE, 1" FLANGE, X 1 1/2" HOSE, BANGO M100150BRB90	1
5	GA5077812	HOSE BARB, ELBOW, 90 DEGREE, 1 FLANGE X 1 HOSE, BANJO	1
6	GA2000047	HOSE BARB, FLANGE, STRAIGHT, 2" FLANGE X 1 1/2" HOSE, BANJO	1
7	GA4551165	PLUMBING COUPLING, M220 FLANGE TO 1" MALE NPT THREAD	1
8	GA5026057	PLUMBING FITTING, SWEPT ELBOW, 90, 1", M100 FLANGE, M100SWP90, BANJO	1
9	GA2000344	PLUMBING FITTING, SWEPT ELBOW, 90, 2", M220 FLANGE, M220SWP90, BANJO	2
10	GA3000316	PRESSURE SENSOR TRANSDUCER, 0-25 BAR, 0.5-4.5V, IFM	1
11	GA2000069	REGULATOR VALVE, 1" NPT, FULL PORT, 3 WAY, 0.8 SEC 12V, KZ VALVE	1
12	GA5077818	SEAL, SUIT 1 MANIFOLD FITTING, RUBBER EPDM, BANJO, M100G	3
13	GA2000569	TEE, 2" FULL PORT X 1", W/ 1/4" BSP FEMALE THREAD, FLANGE, M220100TEEC1, BANJO	1
14	GA2000049	TEE, 2" FULL PORT X 2", FLANGE, M220200TEE, BANJO	1
GA4909665 GOLDACRES		CONTROL VALVE ASSEMBLY, 02, WITH FRONT TANK	REV 00

Control Valve Assy, Standard Plumbing & Plumbing Plus, RH Pod

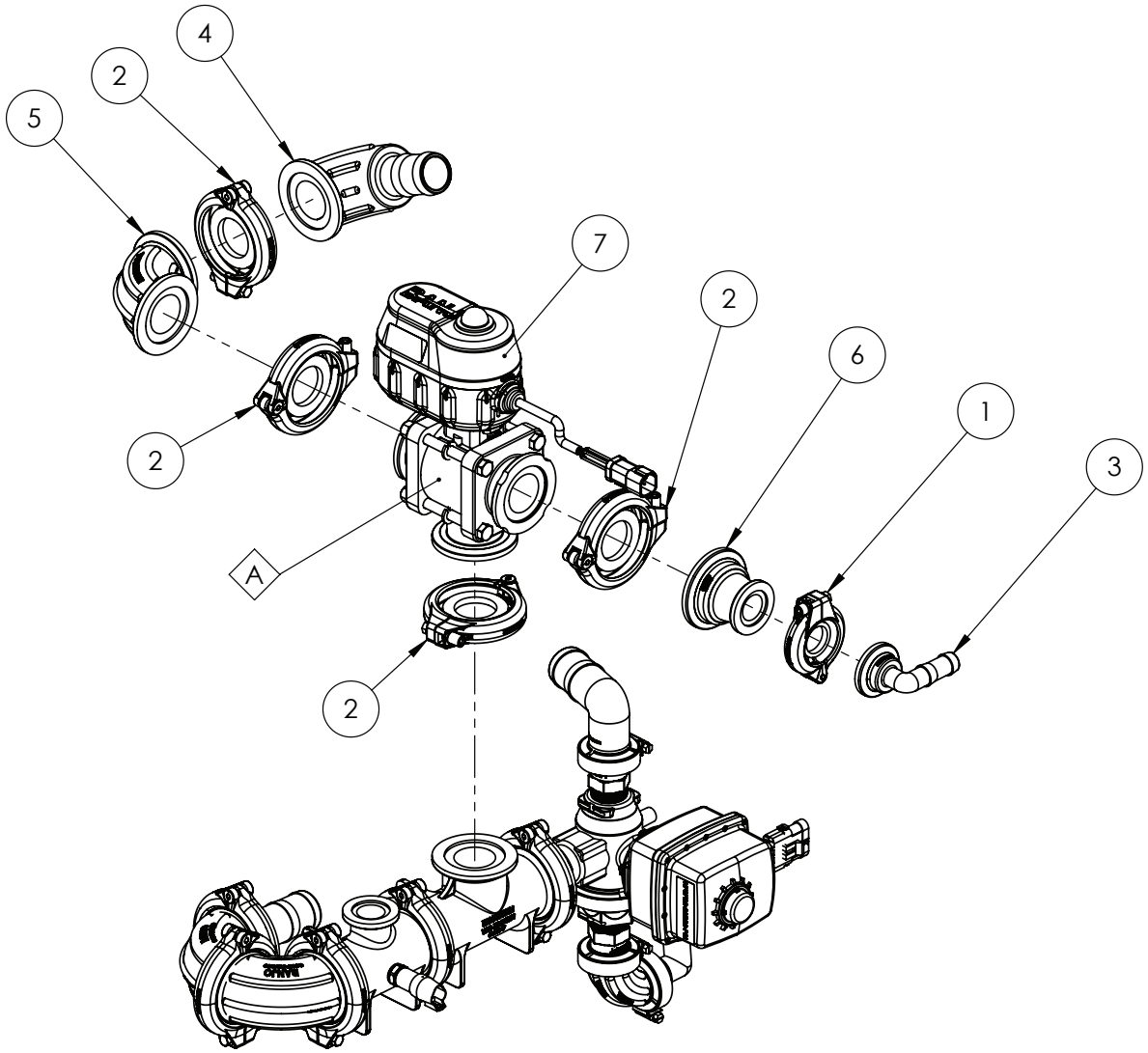

REPLACEMENT PARTS			
ITEM	PART NUMBER	DESCRIPTION	QTY
A	GA5026388	REPAIR KIT, ELECTRIC REGULATING VALVE, BANJO, SUIT, GA2000638	-

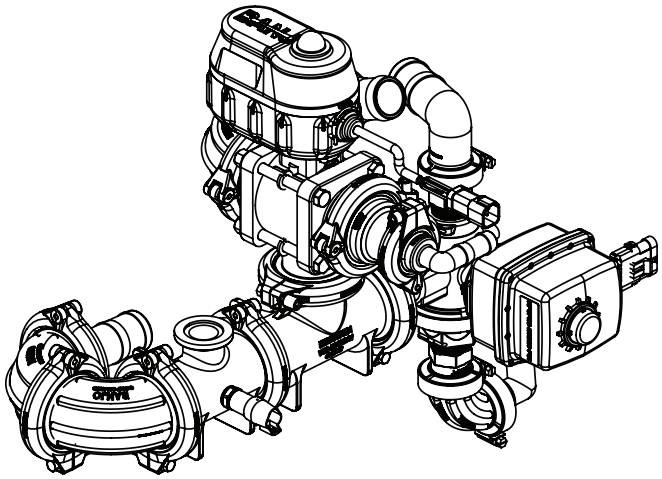

IF DESCRIPTION PREFIX IS ASSEMBLY DRAWING ONLY OR PRODUCTION DRAWING ONLY THE ITEM IS NOT FOR SALE			
ITEM	PART NUMBER	DESCRIPTION	QTY
1	GA2000113	FLANGE CLAMP, AND GASKET, 1", SERIES 100, HYPRO	1
2	GA2000114	FLANGE CLAMP, AND GASKET, 1.5", SERIES 200, HYPRO	4
3	GA5077803	HOSE BARB, ELBOW, 90 DEGREE, 1 FLANGE X 3/4 HOSE, BANJO, M100075BRB90	1
4	GA2000401	PLUMBING FITTING, SWEPT ELBOW, 90, 1.5" HOSE BARB, M200 FLANGE, M200150BRBSWP90, BANJO	1
5	GA2000434	PLUMBING FITTING, 2" FLANGED SWEEP ELBOW, 90	1
6	GA5077828	REDUCING FLANGE, 2" FLANGE X 1" FLANGE, BANJO	1
7	GA2000638	VALVE, BALL, ELECTRIC 3 WAY, 2" STD PORT, BANJO, MEVX201BLF2A	1
GA4909665 GOLDACRES		CONTROL VALVE ASSEMBLY, 02, WITH FRONT TANK	REV 00

Control Valve Assembly, Standard Plumbing & Plumbing Plus, RH Pod

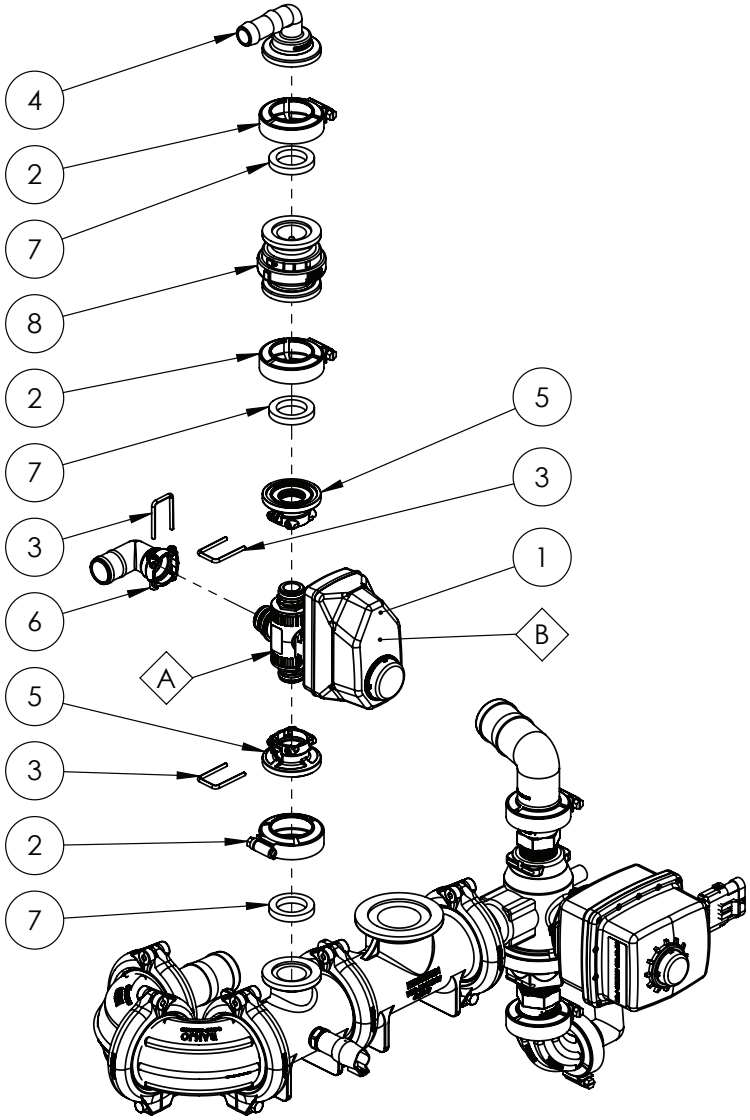

REPLACEMENT PARTS			
ITEM	PART NUMBER	DESCRIPTION	QTY
A	GA5026382	VALVE KIT, 1/2", TX2, POLY, QD, 3-WAY, BL, DIV, FULL PORT, SS BALL, INLINE TO FLOW, EH7, SUIT, GA2000638	-
B	GA5026383	ACTUATOR ONLY, EH7, ON/OFF, 0.5s@12VDC, (+) SIG OPEN, SOLID STATE, NO FB, 3ST WP3T, 3-WAY FLAG	-

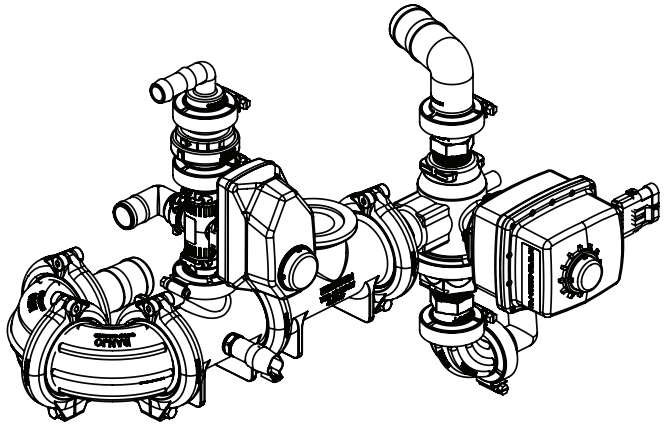

IF DESCRIPTION PREFIX IS ASSEMBLY DRAWING ONLY OR PRODUCTION DRAWING ONLY THE ITEM IS NOT FOR SALE			
ITEM	PART NUMBER	DESCRIPTION	QTY
1	GA2000634	BALL VALVE, MOTORIZED, 3 WAY, 1/2", PIN PONNECTION, KZ VALVE, EH7	1
2	GA5077664	CLAMP, WORM SCREW, 1", BANJO	3
3	GA2000625	HAIRPIN, TO SUIT TX2 VALVE, 1/2 ", 106-0018	3
4	GA5077803	HOSE BARB, ELBOW, 90 DEGREE, 1 FLANGE X 3/4 HOSE, BANJO, M100075BRB90	1
5	GA2000636	PLUMBING FITTING, M100 FLANGE X PIN CONNECTION, KZ	2
6	GA2000606	PLUMBING FITTING, 1" ELBOW, HOSE BARB X FEMALE QD, 211-0119, KZ VALVE	1
7	GA5077818	SEAL, SUIT 1 MANIFOLD FITTING, RUBBER EPDM, BANJO, M100G	3
8	GA5077889	VALVE, CHECK, 1" MANIFOLD, FLANGE, BANJO, MCV100	1
GA4909665 GOLDACRES		CONTROL VALVE ASSEMBLY, 02, WITH FRONT TANK	REV 00

Control Valve, Dual Line, RH Pod

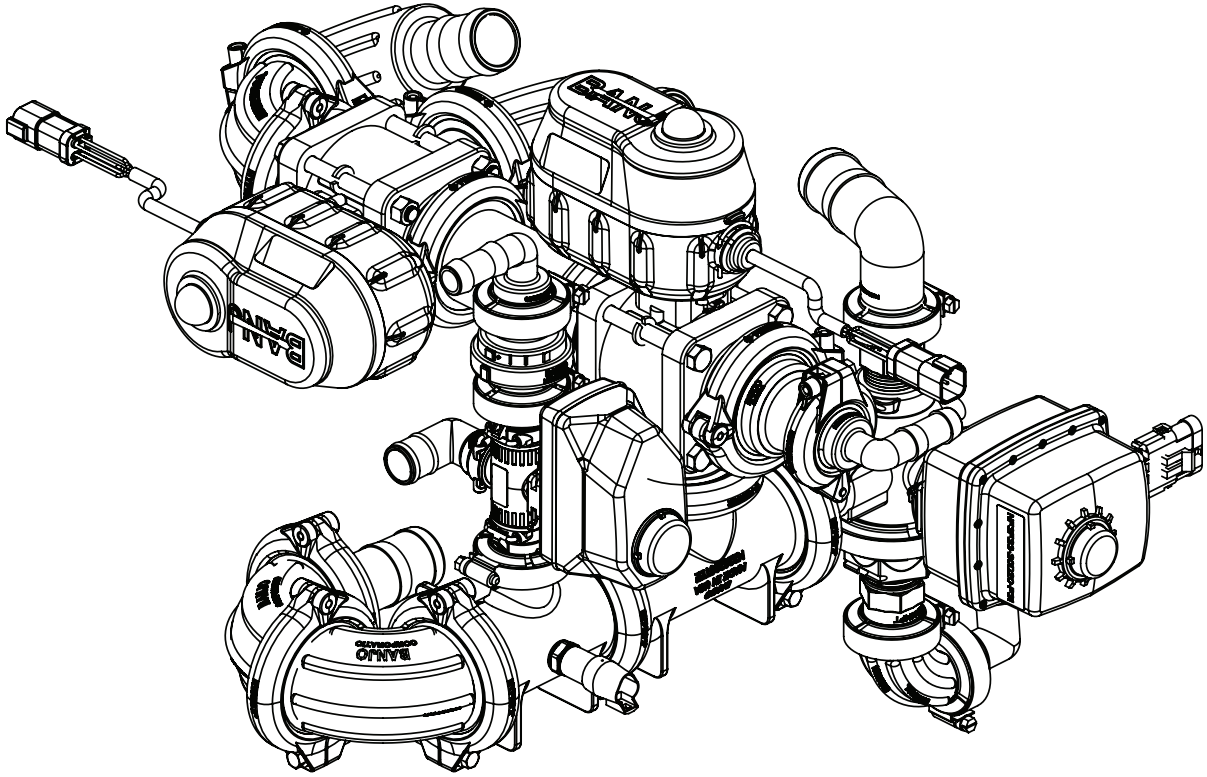

GA4909626	CONTROL VALVE ASSEMBLY, 03, PLUMBING DUAL LINES	REV
GOLDACRES		00

Control Valve Assembly, Dual Line, RH Pod

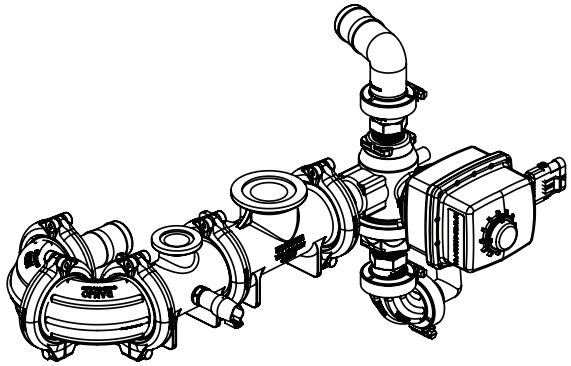

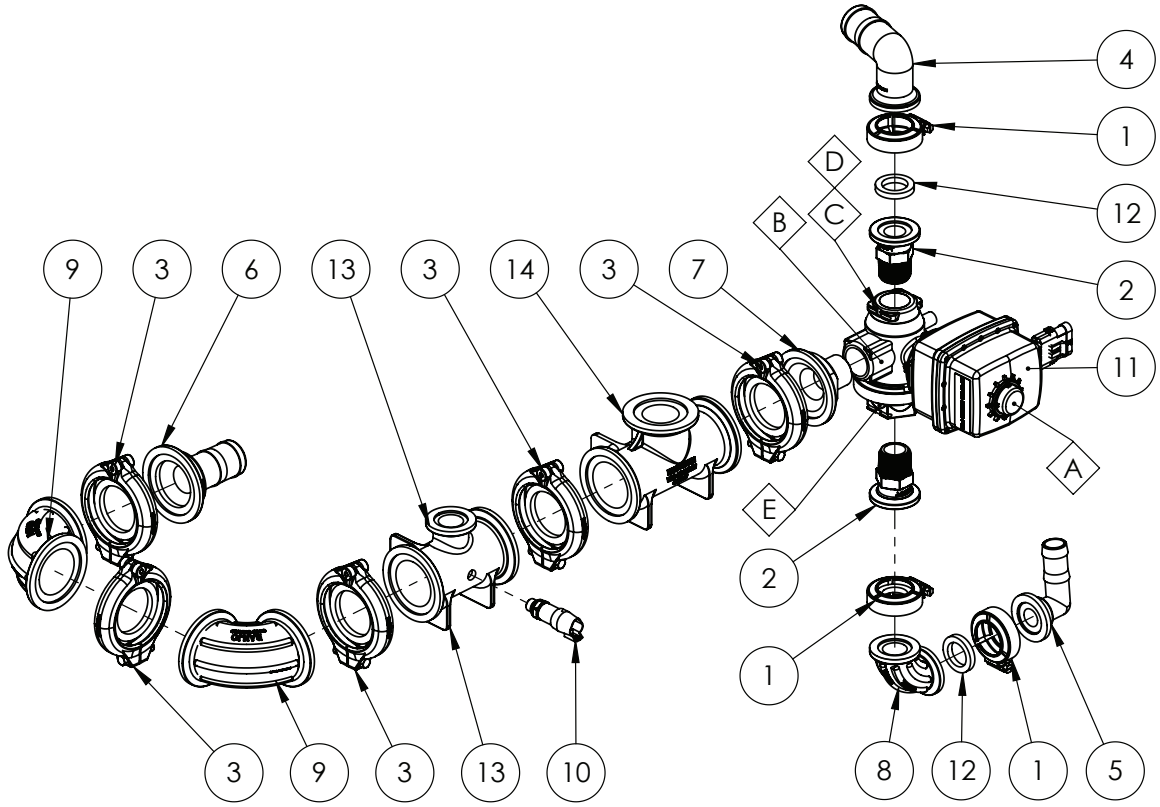

REPLACEMENT PARTS			
ITEM	PART NUMBER	DESCRIPTION	QTY
A	GA2000066	REGULATOR VALVE, ACTUATOR ONLY, 0.8 SEC 12V, SUIT GA2000065, KZ VALVE	-
B	GA2000067	REGULATOR VALVE, VALVE ONLY, SUIT GA2000065, KZ VALVE	-
C	GA5073805	FITTING, 2" HEX, 1" FNPT, KZ VALVE, QX4-127-N, SUITS GA2000067, GA2000065	-
D	GA4953970	O-RING, SUIT, KZ VALVE, END CAP, #229, EPDM, QC3-134, SUITS GA2000067, GA2000065	-
E	GA4953975	BUTTRESS ASSEMBLY, SUIT, KZ VALVE, INCLUDES O-RINGS, 800562, SUITS GA2000067, GA2000065	-

IF DESCRIPTION PREFIX IS ASSEMBLY DRAWING ONLY OR PRODUCTION DRAWING ONLY THE ITEM IS NOT FOR SALE			
ITEM	PART NUMBER	DESCRIPTION	QTY
1	GA5077664	CLAMP, WORM SCREW, 1", BANJO	3
2	GA5077820	COUPLING, FLANGED, 1 FLANGE X 1 MALE THREAD, BANJO	2
3	GA2000115	FLANGE CLAMP, AND GASKET, 2", SERIES 220, HYPRO	5
4	GA2000138	HOSE BARB, ELBOW, 90 DEGREE, 1" FLANGE, X 1 1/2" HOSE, BANGO M100150BRB90	1
5	GA5077812	HOSE BARB, ELBOW, 90 DEGREE, 1 FLANGE X 1 HOSE, BANJO	1
6	GA2000047	HOSE BARB, FLANGE, STRAIGHT, 2" FLANGE X 1 1/2" HOSE, BANJO	1
7	GA4551165	PLUMBING COUPLING, M220 FLANGE TO 1" MALE NPT THREAD	1
8	GA5026057	PLUMBING FITTING, SWEPT ELBOW, 90, 1", M100 FLANGE, M100SWP90, BANJO	1
9	GA2000344	PLUMBING FITTING, SWEPT ELBOW, 90, 2", M220 FLANGE, M220SWP90, BANJO	2
10	GA3000316	PRESSURE SENSOR TRANSDUCER, 0-25 BAR, 0.5-4.5V, IFM	1
11	GA2000069	REGULATOR VALVE, 1" NPT, FULL PORT, 3 WAY, 0.8 SEC 12V, KZ VALVE	1
12	GA5077818	SEAL, SUIT 1 MANIFOLD FITTING, RUBBER EPDM, BANJO, M100G	3
13	GA2000569	TEE, 2" FULL PORT X 1", W/ 1/4" BSP FEMALE THREAD, FLANGE, M220100TEEC1, BANJO	1
14	GA2000049	TEE, 2" FULL PORT X 2", FLANGE, M220200TEE, BANJO	1
GA4909626 GOLDACRES		CONTROL VALVE ASSEMBLY, 03, PLUMBING DUAL LINES	REV 00

Control Valve Assembly, Dual Line, RH Pod

REPLACEMENT PARTS			
ITEM	PART NUMBER	DESCRIPTION	QTY
A	GA5026388	REPAIR KIT, ELECTRIC REGULATING VALVE, BANJO, SUIT, GA2000638	-

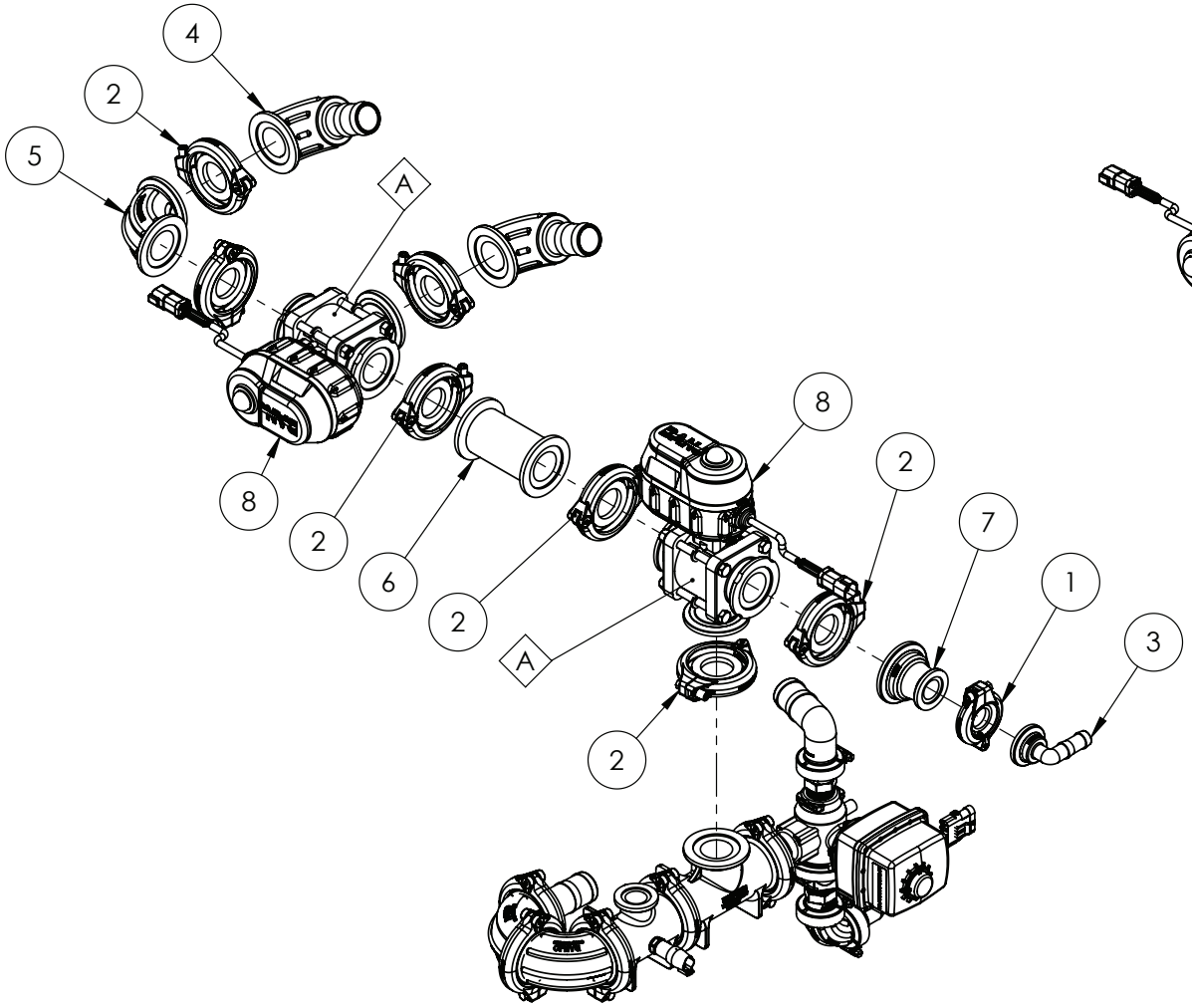

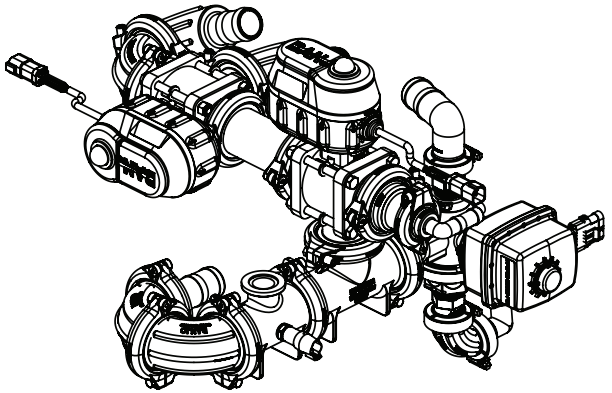

IF DESCRIPTION PREFIX IS ASSEMBLY DRAWING ONLY OR PRODUCTION DRAWING ONLY THE ITEM IS NOT FOR SALE			
ITEM	PART NUMBER	DESCRIPTION	QTY
1	GA2000113	FLANGE CLAMP, AND GASKET, 1", SERIES 100, HYPRO	1
2	GA2000114	FLANGE CLAMP, AND GASKET, 1.5", SERIES 200, HYPRO	7
3	GA5077803	HOSE BARB, ELBOW, 90 DEGREE, 1 FLANGE X 3/4 HOSE, BANJO, M100075BRB90	1
4	GA2000401	PLUMBING FITTING, SWEPT ELBOW, 90, 1.5" HOSE BARB, M200 FLANGE, M200150BRBSWP90, BANJO	2
5	GA2000434	PLUMBING FITTING, 2" FLANGED SWEEP ELBOW, 90	1
6	GA5077840	PLUMBING COUPLING, STRAIGHT, 2" FLANGE X " FLANGE X 4 1/2" LONG, BANJO	1
7	GA5077828	REDUCING FLANGE, 2" FLANGE X 1" FLANGE, BANJO	1
8	GA2000638	VALVE, BALL, ELECTRIC 3 WAY, 2" STD PORT, BANJO, MEVX201BLF2A	2
GA4909626 GOLDACRES		CONTROL VALVE ASSEMBLY, 03, PLUMBING DUAL LINES	REV 00

Control Valve Assembly, Dual Line, RH Pod

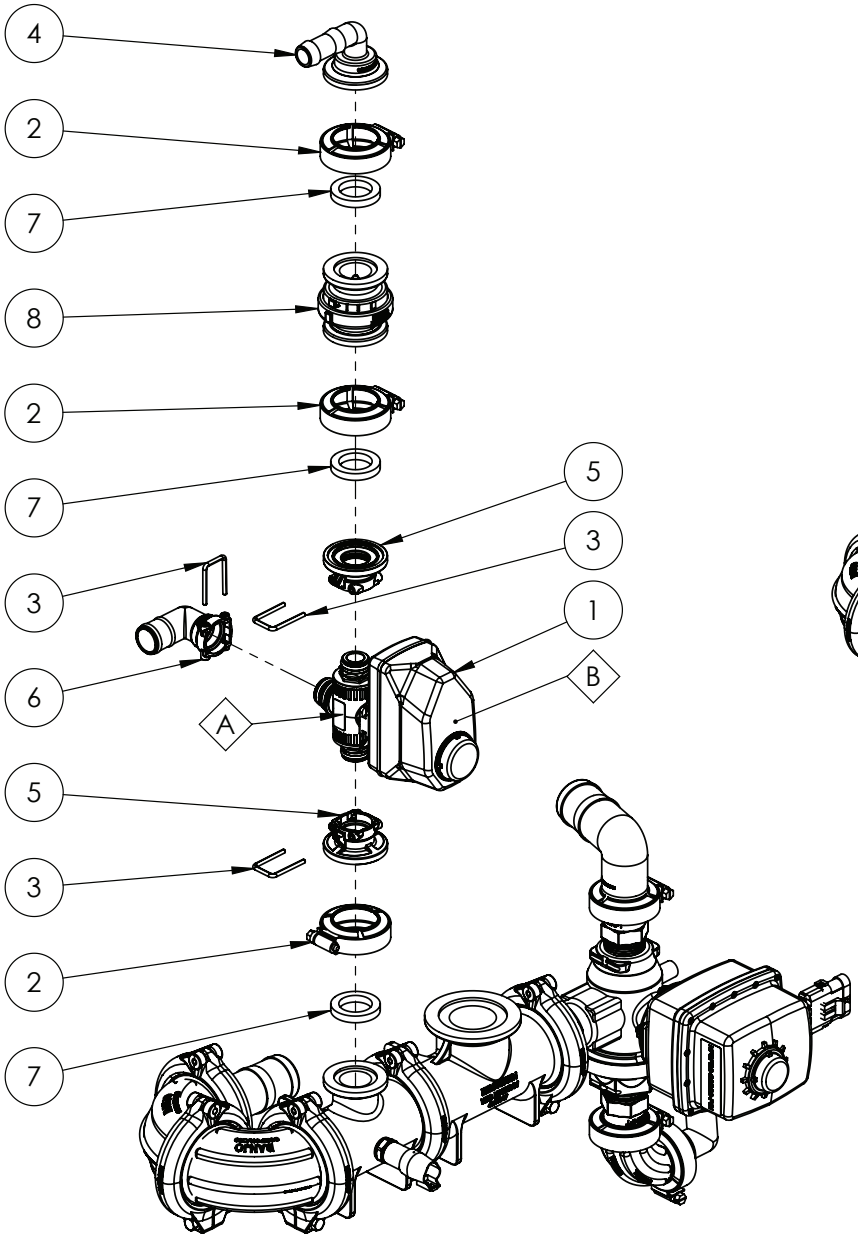

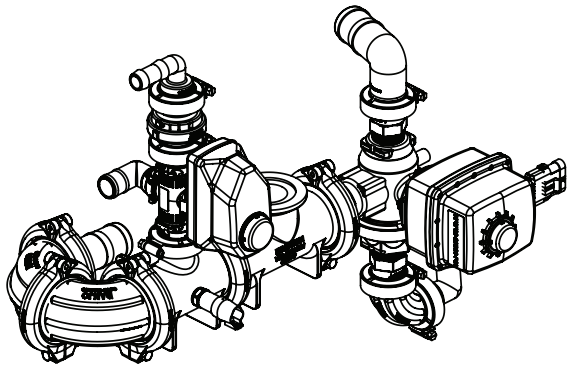

REPLACEMENT PARTS			
ITEM	PART NUMBER	DESCRIPTION	QTY
A	GA5026382	VALVE KIT, 1/2", TX2, POLY, QD, 3-WAY, BL, DIV, FULL PORT, SS BALL, INLINE TO FLOW, EH7, SUIT, GA2000638	-
B	GA5026383	ACTUATOR ONLY, EH7, ON/OFF, 0.5s@12VDC, (+) SIG OPEN, SOLID STATE, NO FB, 3ST WP3T, 3-WAY FLAG	-

IF DESCRIPTION PREFIX IS ASSEMBLY DRAWING ONLY OR PRODUCTION DRAWING ONLY THE ITEM IS NOT FOR SALE			
ITEM	PART NUMBER	DESCRIPTION	QTY
1	GA2000634	BALL VALVE, MOTORIZED, 3 WAY, 1/2", PIN PONNECTION, KZ VALVE, EH7	1
2	GA5077664	CLAMP, WORM SCREW, 1", BANJO	3
3	GA2000625	HAIRPIN, TO SUIT TX2 VALVE, 1/2 ", 106-0018	3
4	GA5077803	HOSE BARB, ELBOW, 90 DEGREE, 1 FLANGE X 3/4 HOSE, BANJO, M100075BRB90	1
5	GA2000636	PLUMBING FITTING, M100 FLANGE X PIN CONNECTION, KZ	2
6	GA2000606	PLUMBING FITTING, 1" ELBOW, HOSE BARB X FEMALE QD, 211-0119, KZ VALVE	1
7	GA5077818	SEAL, SUIT 1 MANIFOLD FITTING, RUBBER EPDM, BANJO, M100G	3
8	GA5077889	VALVE, CHECK, 1" MANIFOLD, FLANGE, BANJO, MCV100	1
GA4909626 GOLDACRES		CONTROL VALVE ASSEMBLY, 03, PLUMBING DUAL LINES	REV 00

Standard, Pressure Filter Mounting, RH Pod

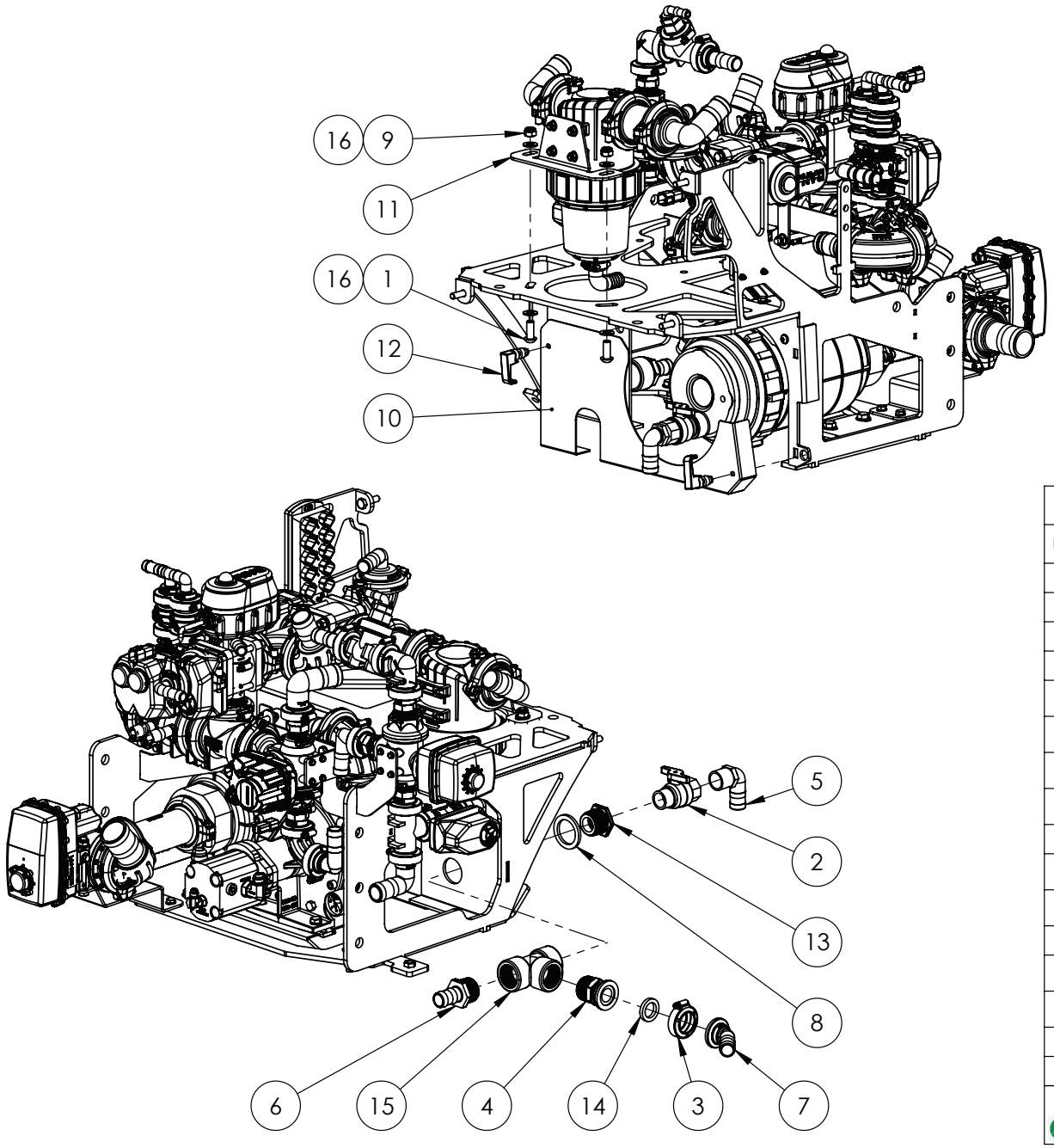

IF DESCRIPTION PREFIX IS ASSEMBLY DRAWING ONLY OR PRODUCTION DRAWING ONLY THE ITEM IS NOT FOR SALE			
ITEM	PART NUMBER	DESCRIPTION	QTY
1	GA5051530	BHCS M12 x 30 SS A2-70	2
2	GA5067620	BALL VALVE, 1" MALE / FEMALE, TEE HANDLE, BRASS	1
3	GA5077664	CLAMP, WORM SCREW, 1", BANJO	1
4	GA5077808	FLANGE 1" X 1 1/4" MALE THREAD	1
5	GA5077723	HOSE BARB, ELBOW, 90 DEGREE, 1" MALE X 1" HOSE, BANJO	1
6	GA5077728	HOSE BARB, STRAIGHT, 1 1/4" MALE THREAD X 1" HOSE, BANJO	1
7	GA5078650	HOSE BARB, 45 DEGREE, 1 FLANGE X 1 HOSE, BANJO, M100BRB45	1
8	GA4000632	MACHINED, SPACER RING, 44mm, POD PLUMBING INSTALLATION FITTING	1
9	GA5012461	NUT M12 NYLOC ZP	2
10	GA4416030	PLATE, FRONT COVER, PUMP POD FRAME, S3, SP	1
11	GA4909492	PRODUCTION DRAWING ONLY, PRESSURE FILTER ASSEMBLY, CENTRIFUGAL PUMP, S3, SP	1
12	GA5066600	RAWL ACTION LATCH BLACK	2
13	GA5078016	REDUCING BUSH, 1 1/4 MALE THREAD X 1 FEMALE THREAD, BANJO	1
14	GA5077818	SEAL, SUIT 1 MANIFOLD FITTING, RUBBER EPDM, BANJO, M100G	1
15	GA5078152	TEE, THREADED, 1 1/4 FEMALE, BANJO	1
16	GA5000577	WASHER M12 FLAT SS HD	4
GA6101850-03 GOLDACRES		SPRAY PUMP POD, CONFIGURABLE, SP SERIES 3	REV 01

Pressure Filter Assembly, RH Pod

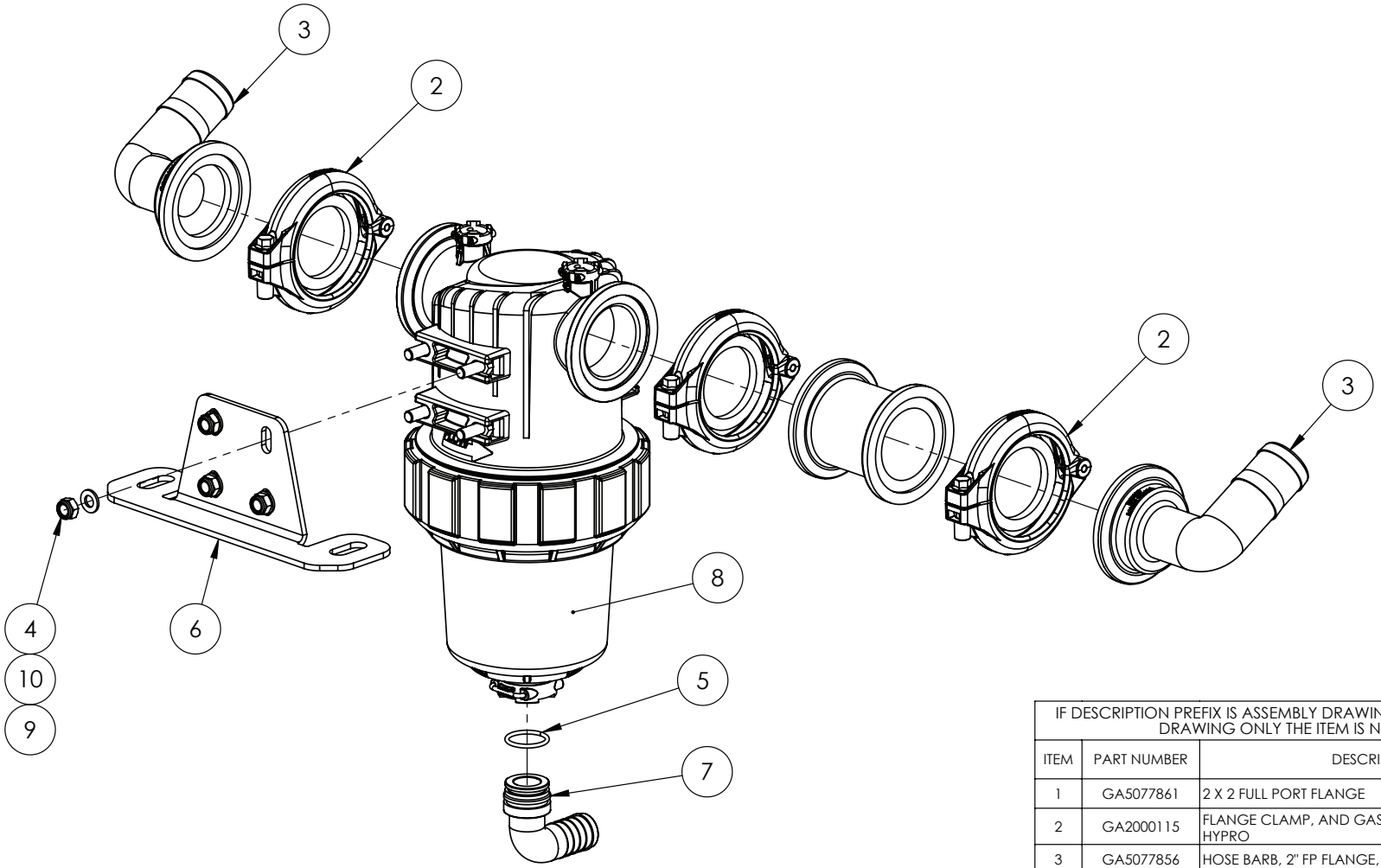

IF DESCRIPTION PREFIX IS ASSEMBLY DRAWING ONLY OR PRODUCTION DRAWING ONLY THE ITEM IS NOT FOR SALE			
ITEM	PART NUMBER	DESCRIPTION	QTY
1	GA5077861	2 X 2 FULL PORT FLANGE	1
2	GA2000115	FLANGE CLAMP, AND GASKET, 2", SERIES 220, HYPRO	3
3	GA5077856	HOSE BARB, 2" FP FLANGE, 1-1/2" HB, 90 DEGREE	2
4	GA5004917	NUT M8 NYLOC ZP	4
5	GA2000251	O-RING, BLANK CAP, SUIT PRESSURE FILTER GA2000563, ARAG, G11058V	1
6	GA4410350	PLATE, RH POD, PRESSURE FILTER MOUNT, PRAIRIE PRO, 2021	1
7	GA2000608	PLUMBING FITTING, HOSE BARB, ELBOW, 1", ARAG, 1191325	1
8	GA2000563	PRESSURE FILTER, 2", 100 MESH, ARAG SERIES 330	1
9	GA5004085	SET SCREW M8 X 20 GR8.8 ZP	4
10	GA5003643	WASHER M8 FLAT SS HD	4
GA4909492 GOLDACRES		PRODUCTION DRAWING ONLY, PRESSURE FILTER ASSEMBLY, CENTRIFUGAL PUMP, S3, SP	REV 01

Plumbing Lines & Hose Clamps, RH Pod

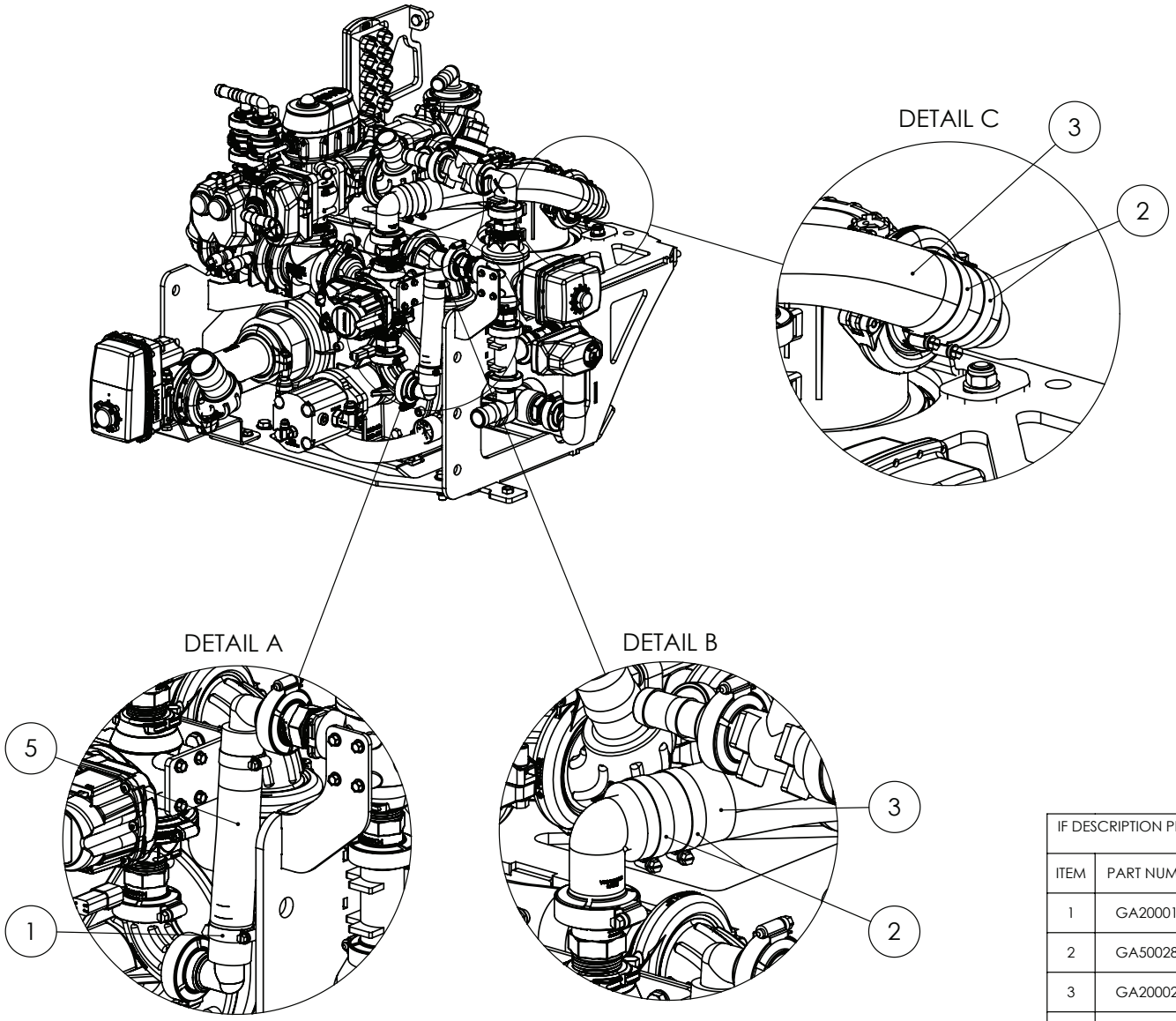

IF DESCRIPTION PREFIX IS ASSEMBLY DRAWING ONLY OR PRODUCTION DRAWING ONLY THE ITEM IS NOT FOR SALE			
ITEM	PART NUMBER	DESCRIPTION	QTY.
1	GA2000110	HOSE CLAMP, STAINLESS STEEL, 22mm-38mm	6
2	GA5002873	HOSE CLAMP, 1 1/2" SS (32-50/12W)	8
3	GA2000225	HOSE, PRESSURE, 1 1/2", HO38P	0.465
5	GA2000219	HOSE, PRESSURE, 1", HO25P	0.205
GA6101850-04 GOLDACRES		SPRAY PUMP POD, CONFIGURABLE, SP SERIES 3	REV 00

Plumbing Lines & Hose Clamps, RH Pod

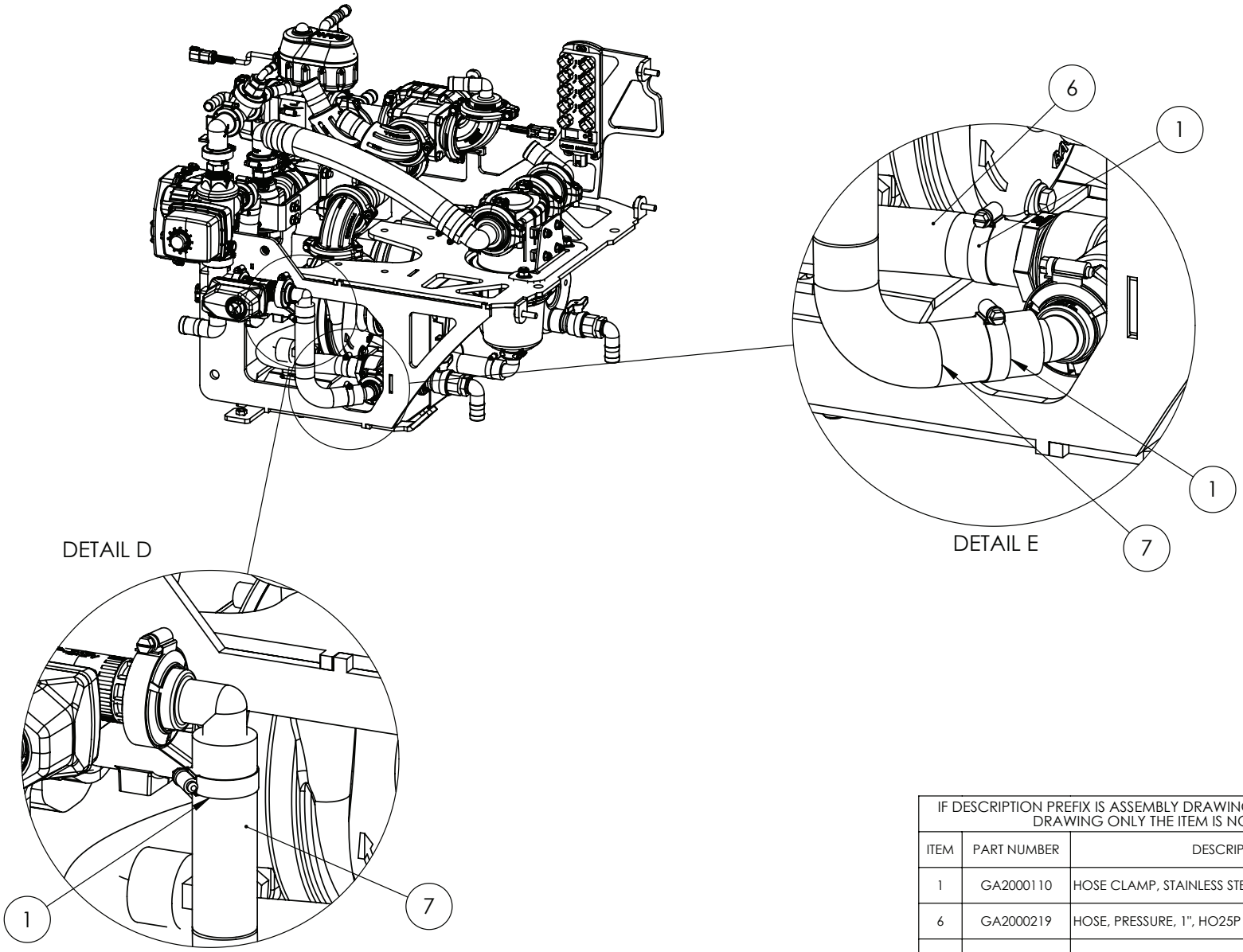

IF DESCRIPTION PREFIX IS ASSEMBLY DRAWING ONLY OR PRODUCTION DRAWING ONLY THE ITEM IS NOT FOR SALE			
ITEM	PART NUMBER	DESCRIPTION	QTY.
1	GA2000110	HOSE CLAMP, STAINLESS STEEL, 22mm-38mm	6
6	GA2000219	HOSE, PRESSURE, 1", HO25P	1
7	GA2000219	HOSE, PRESSURE, 1", HOS25P	0.25
GA6101850-04 GOLDACRES		SPRAY PUMP POD, CONFIGURABLE, SP SERIES 3	REV 00

Plumbing Lines & Hose Clamps, RH Pod

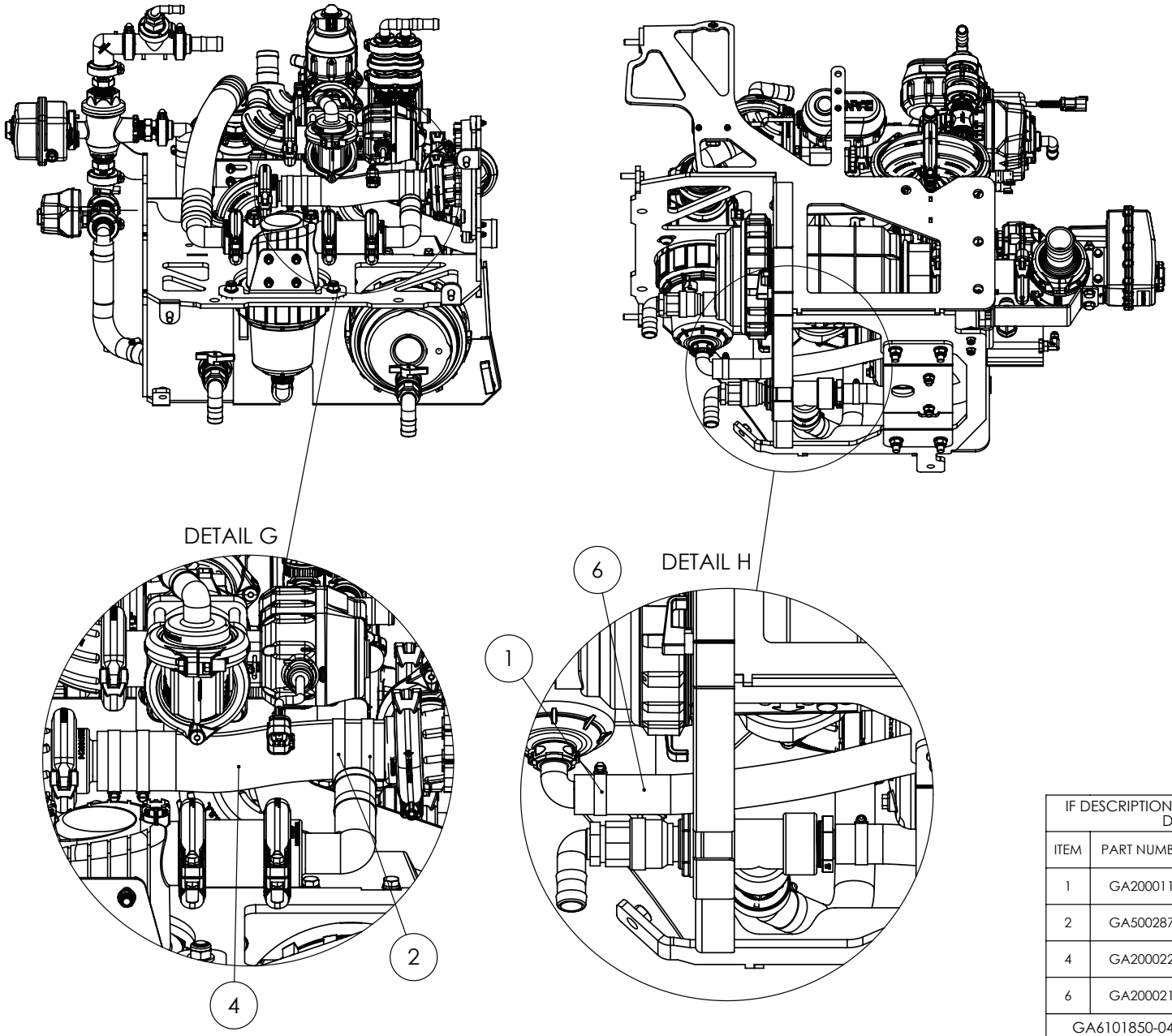

IF DESCRIPTION PREFIX IS ASSEMBLY DRAWING ONLY OR PRODUCTION DRAWING ONLY THE ITEM IS NOT FOR SALE			
ITEM	PART NUMBER	DESCRIPTION	QTY.
1	GA2000110	HOSE CLAMP, STAINLESS STEEL, 22mm-38mm	6
2	GA5002873	HOSE CLAMP, 1 1/2" SS (32-50/12W)	8
4	GA2000225	HOSE, PRESSURE, 1 1/2", HO38P	0.3
6	GA2000219	HOSE, PRESSURE, 1", HO25P	1
GA6101850-04 GOLDACRES		SPRAY PUMP POD, CONFIGURABLE, SP SERIES 3	REV 00

Module Harness Mount, RH Pod

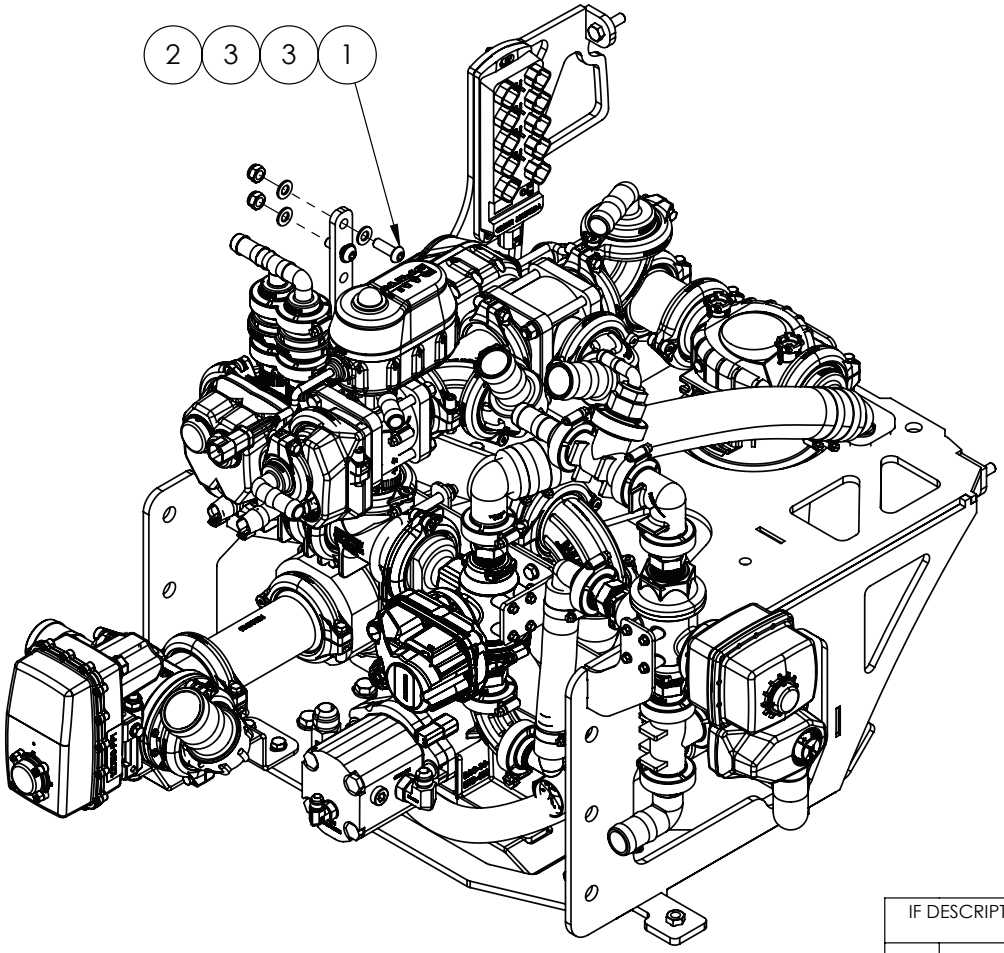

IF DESCRIPTION PREFIX IS ASSEMBLY DRAWING ONLY OR PRODUCTION DRAWING ONLY THE ITEM IS NOT FOR SALE			
ITEM	PART NUMBER	DESCRIPTION	QTY.
1	GA5048120	BHCS M10 X 30 SS A2-70	2
2	GA5000141	NUT M10 NYLOC ZP	2
3	GA5000117	WASHER M10 FLAT SS HD	4
GA6101850-04 GOLDACRES		SPRAY PUMP POD, CONFIGURABLE, SP SERIES 3	REV 00

Decals, Front View, RH Pod

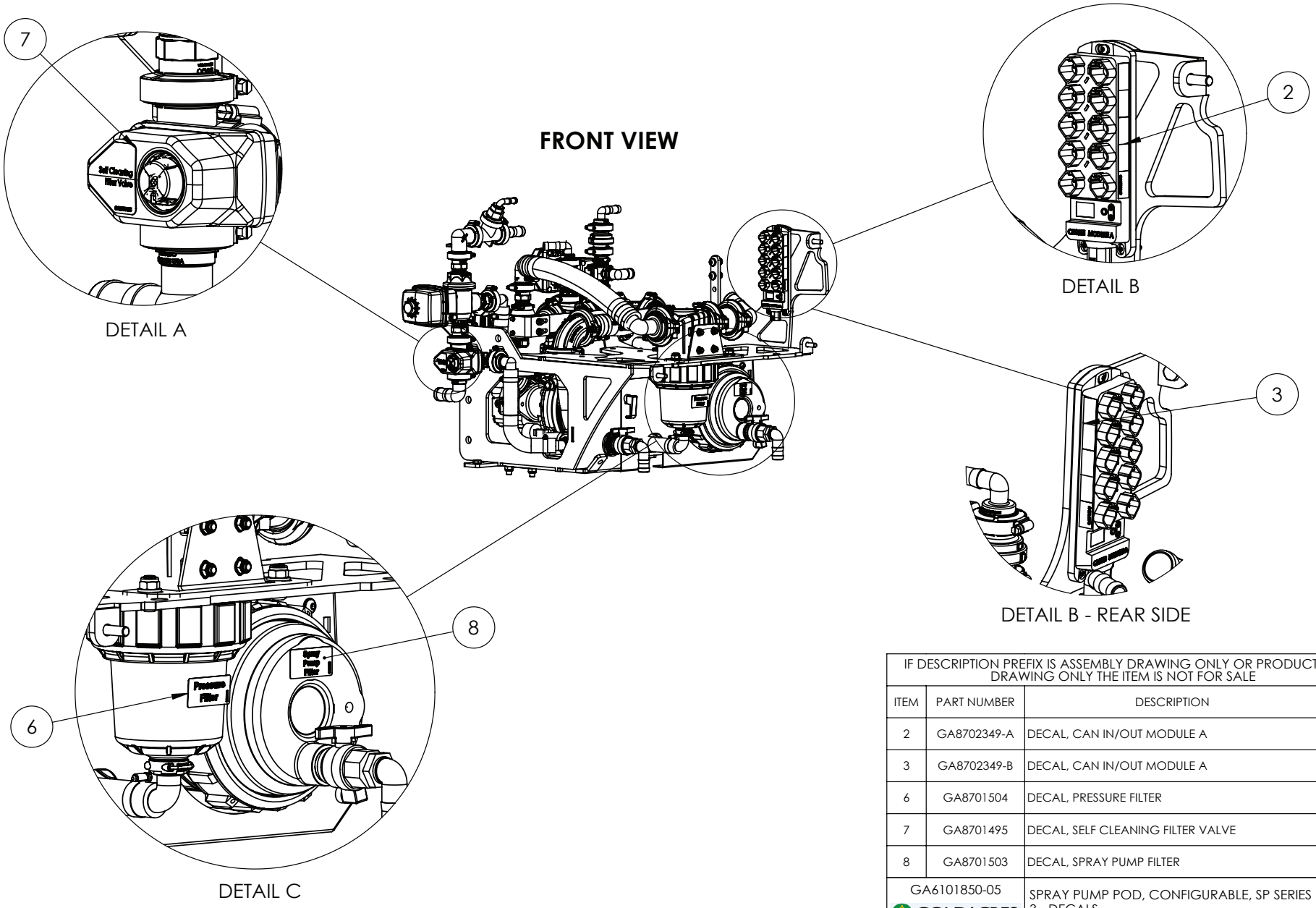

IF DESCRIPTION PREFIX IS ASSEMBLY DRAWING ONLY OR PRODUCTION DRAWING ONLY THE ITEM IS NOT FOR SALE			
ITEM	PART NUMBER	DESCRIPTION	QTY.
2	GA8702349-A	DECAL, CAN IN/OUT MODULE A	1
3	GA8702349-B	DECAL, CAN IN/OUT MODULE A	1
6	GA8701504	DECAL, PRESSURE FILTER	1
7	GA8701495	DECAL, SELF CLEANING FILTER VALVE	1
8	GA8701503	DECAL, SPRAY PUMP FILTER	1
GA6101850-05 GOLDACRES		SPRAY PUMP POD, CONFIGURABLE, SP SERIES 3 - DECALS	REV 00

Decals, Plumbing Standard, Plumbing Plus, No Front Mount, RH Pod

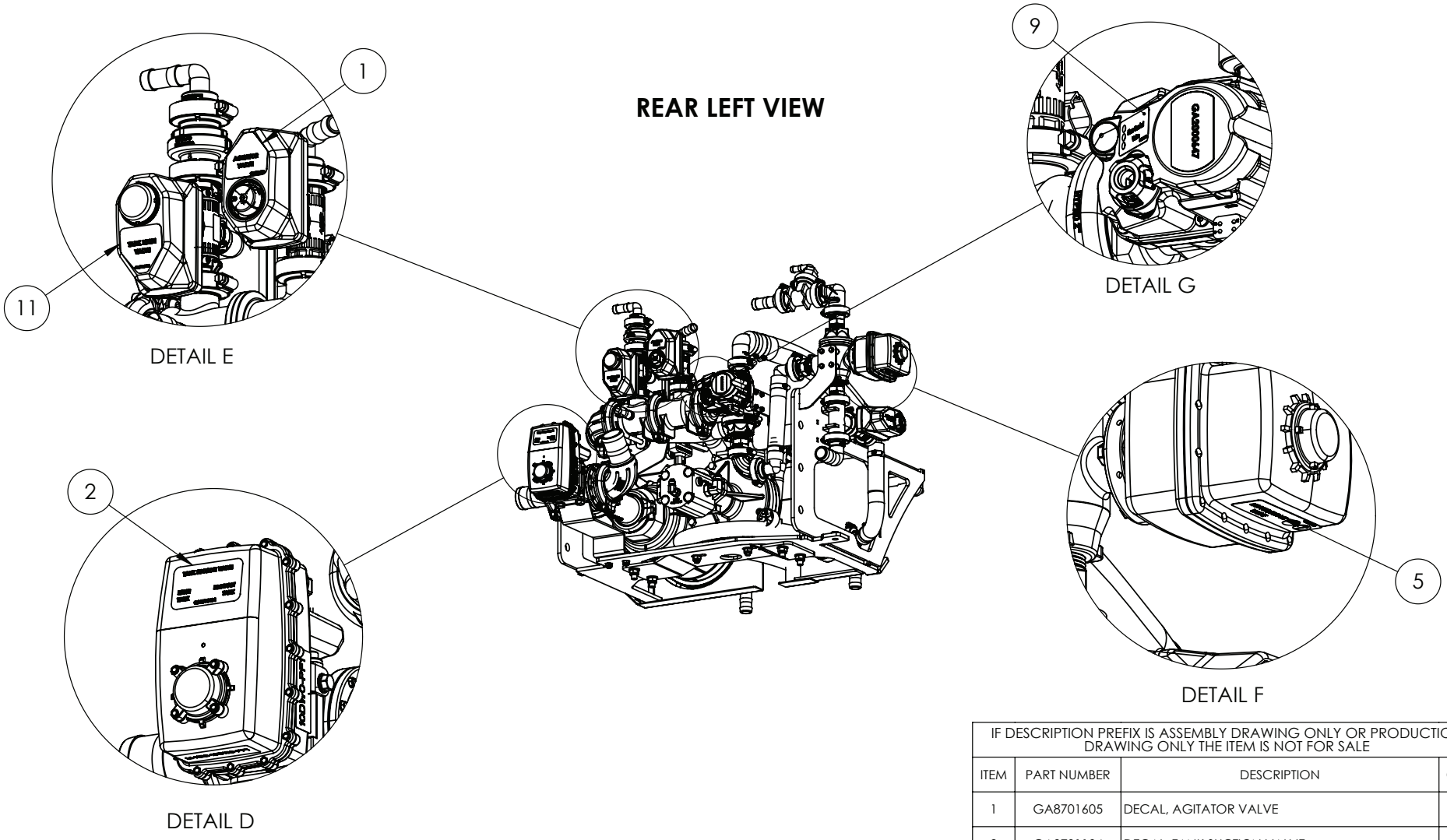

BUILD ORDER:

FIT ITEMS (2) (5) (9) (11)

IF 65215 - PLUMBING STANDARD

OR 65216 - PLUMBING PLUS FIT ITEM (1)

IF DESCRIPTION PREFIX IS ASSEMBLY DRAWING ONLY OR PRODUCTION DRAWING ONLY THE ITEM IS NOT FOR SALE			
ITEM	PART NUMBER	DESCRIPTION	QTY.
1	GA8701605	DECAL, AGITATOR VALVE	1
2	GA8701104	DECAL, TANK SUCTION VALVE	1
5	GA8701133	DECAL, HOPPER-BYPASS VALVE	1
9	GA8702477	FLOW CONTROL EH9-3WAY-3SECOND - DECAL	1
11	GA8701099	TANK RINSE NOZZLES FROM FILL PUMP	1
GA6101850-05 GOLDACRES		SPRAY PUMP POD, CONFIGURABLE, SP SERIES 3 - DECALS	REV 00

Decals, Plumbing Standard, Plumbing Plus & Front Mount, RH Pod

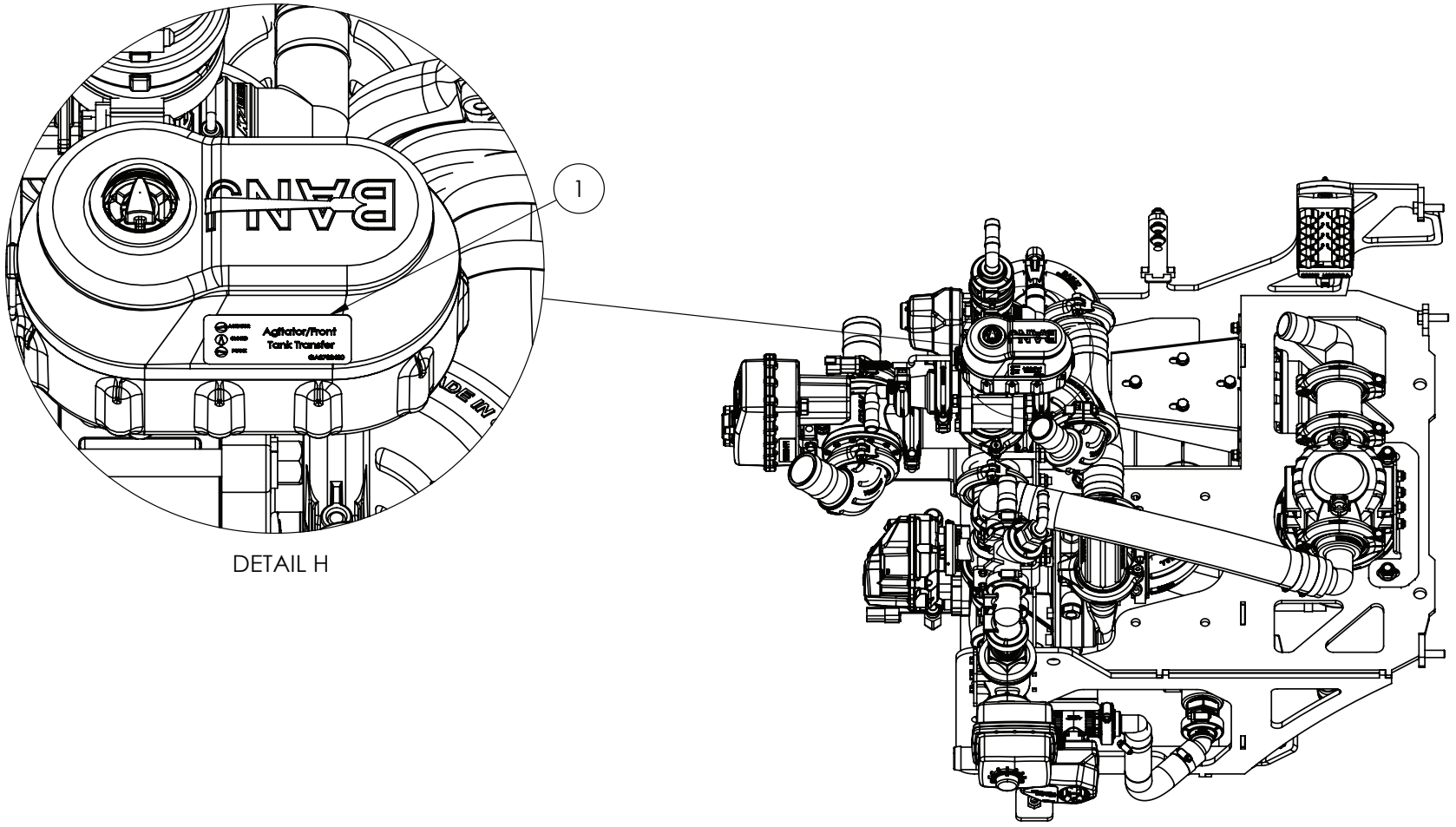

DETAIL H

BUILD ORDER:
65215 - PLUMBING STANDARD
OR 65216 - PLUMBING PLUS

AND 80110 - 1500L FRONT MOUNT TANK ADDITIONAL CAPACITY, FIT ITEM (1)

IF DESCRIPTION PREFIX IS ASSEMBLY DRAWING ONLY OR PRODUCTION DRAWING ONLY THE ITEM IS NOT FOR SALE			
ITEM	PART NUMBER	DESCRIPTION	QTY.
1	GA8702480	BANJO MEVX20BV DECAL	1
GA6101850-05 GOLDACRES		SPRAY PUMP POD, CONFIGURABLE, SP SERIES 3 - DECALS	REV 00

Decals, Dual Lines, RH Pod

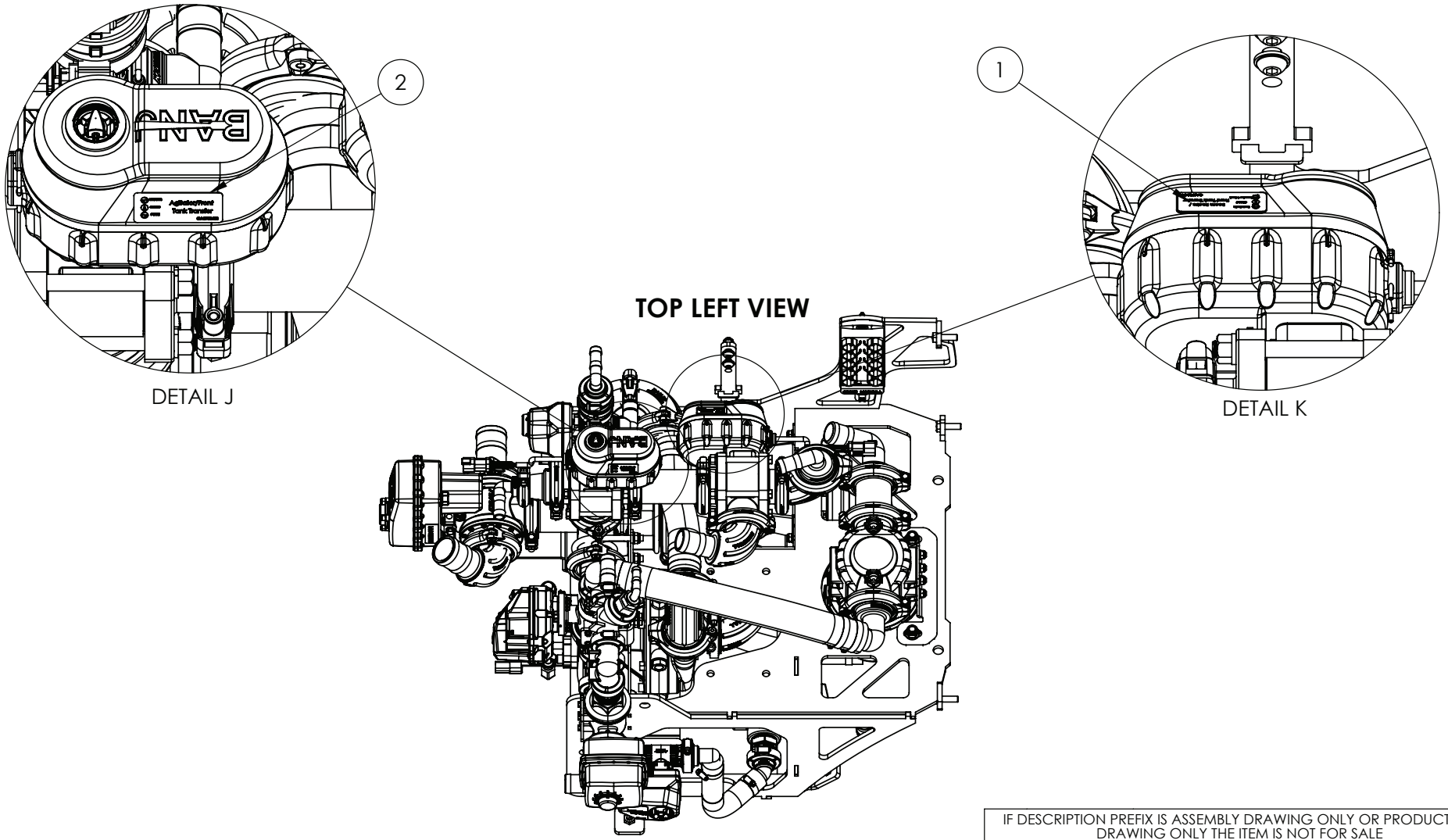

IF DESCRIPTION PREFIX IS ASSEMBLY DRAWING ONLY OR PRODUCTION DRAWING ONLY THE ITEM IS NOT FOR SALE			
ITEM	PART NUMBER	DESCRIPTION	QTY.
1	GA8702479	BANJO MEVX20BV DECAL - RAPIDFLOW	1
2	GA8702480	BANJO MEVX20BV DECAL	1
GA6101850-05 GOLDACRES		SPRAY PUMP POD, CONFIGURABLE, SP SERIES 3 - DECALS	REV 00

BUILD ORDER:

IF OPTION 65217 - PLUMBING DUAL LINES, FIT ITEMS (2) (1)

RH Pod, Hawkeye

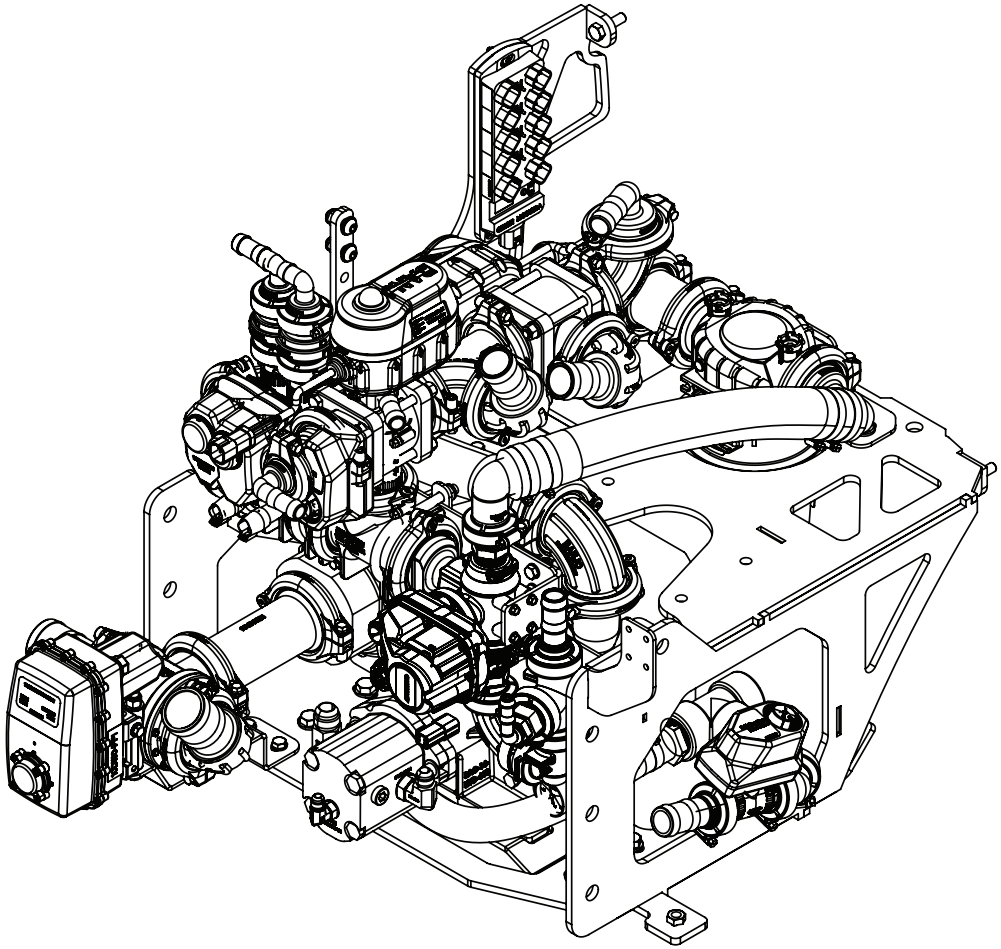

BUILD OPTIONS:
10073 - HAWKEYE 2ND GENERATION PWM
65215 - PLUMBING STANDARD
65216 - PLUMBING PLUS
65217 - PLUMBING DUAL LINES
80110 - 1500L FRONT MOUNT TANK ADDITIONAL CAPACITY

GA6101994 GOLDACRES	SPRAY PUMP POD, HAWKEYE, CONFIGURABLE, SP SERIES 3	REV 00

Spray Pump & Suction Filter Mounting, RH Pod, Hawkeye

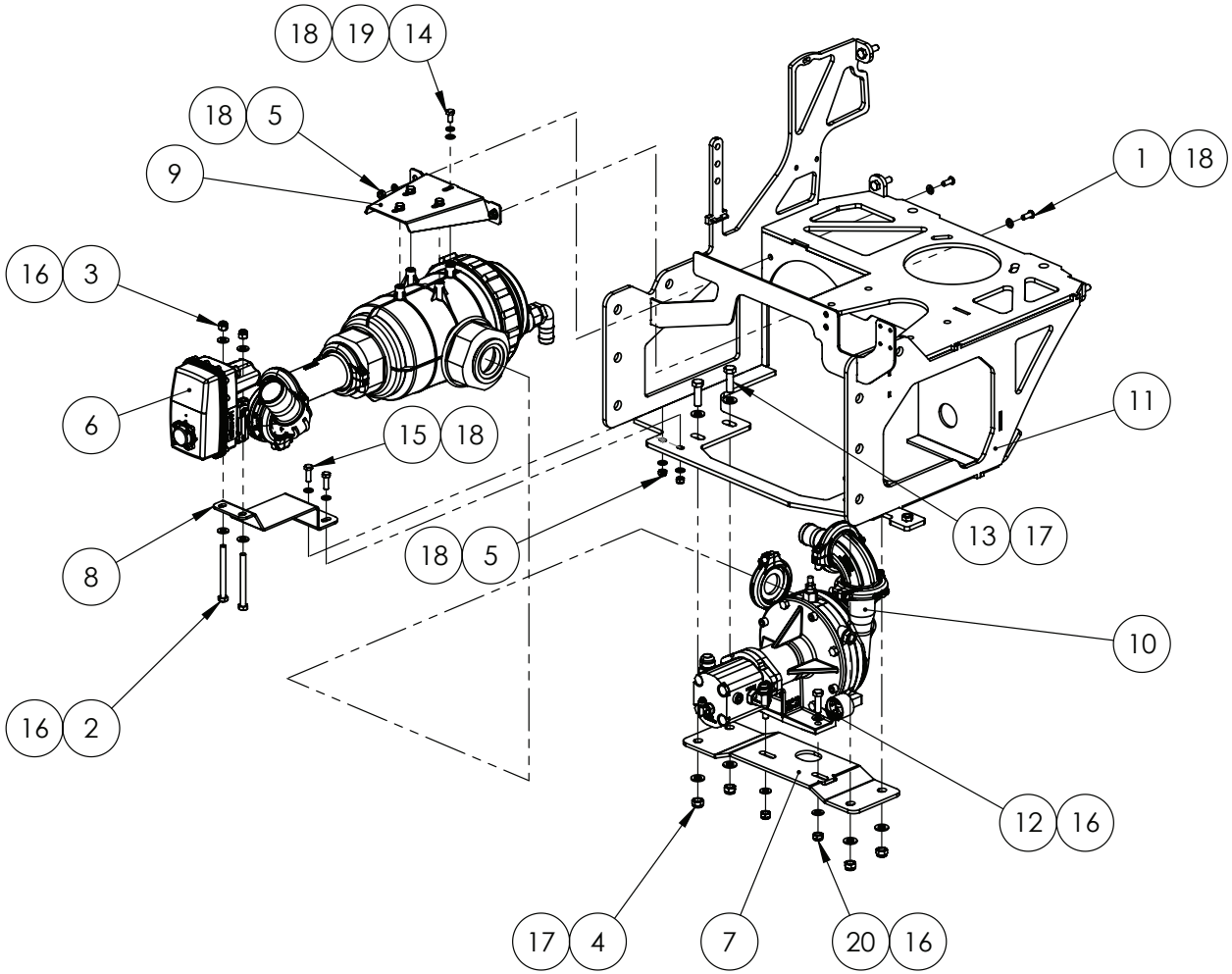

IF DESCRIPTION PREFIX IS ASSEMBLY DRAWING ONLY OR PRODUCTION DRAWING ONLY THE ITEM IS NOT FOR SALE			
ITEM	PART NUMBER	DESCRIPTION	QTY
1	GA0500102	BHCS M8 X 20 SS A2-70	2
2	GA0500039	BOLT 3/8" UNC X 4" GR8 ZP	2
3	GA0500026	NUT 3/8" NYLOC UNF ZP	2
4	GA5012461	NUT M12 NYLOC ZP	4
5	GA5004917	NUT M8 NYLOC ZP	4
6	GA4954075	PRODUCTION DRAWING ONLY, SPRAY PUMP SUCTION FILTER ASSEMBLY, SERIES 3	1
7	GA4415985	PLATE, ACE PUMP MOUNT, PUMP POD FRAME, SERIES 3 SP	1
8	GA4000029	PLATE, BALL VALVE MOUNT, SUCTION FILTER ASSEMBLY, SERIES 3 SP	1
9	GA4415875	PLATE, BRACKET, 3" SUCTION FILTER ARAG, MOUNT	1
10	GA4909494	PRODUCTION DRAWING ONLY, CENTRIFUGAL PUMP, 644 LPM, ACE PUMP ASSEMBLY	1
11	GA4604900	PUMP POD FRAME, SERIES 3, SELF PROPELLED	1
12	GA5006111	SET SCREW M10 X 35 GR8.8 ZP	2
13	GA5000319	SET SCREW M12 X 40 GR8.8 ZP	4
14	GA5011465	SET SCREW M8 X 16 GR8.8 ZP	4
15	GA5004713	SET SCREW M8 X 25 SS A2-70	2
16	GA5000117	WASHER M10 FLAT SS HD	8
17	GA5000577	WASHER M12 FLAT SS HD	8
18	GA5003643	WASHER M8 FLAT SS HD	12
19	GA5004919	WASHER M8 SPRING SS	4
20	GA5000141	NUT M10 NYLOC ZP	2
GA6101994-01 GOLDACRES		SPRAY PUMP POD, HAWKEYE, CONFIGURABLE, SP SERIES 3	REV 00

Spray Pump Assembly, Centrifugal, ACE 650 Series, RH Pod, Hawkeye

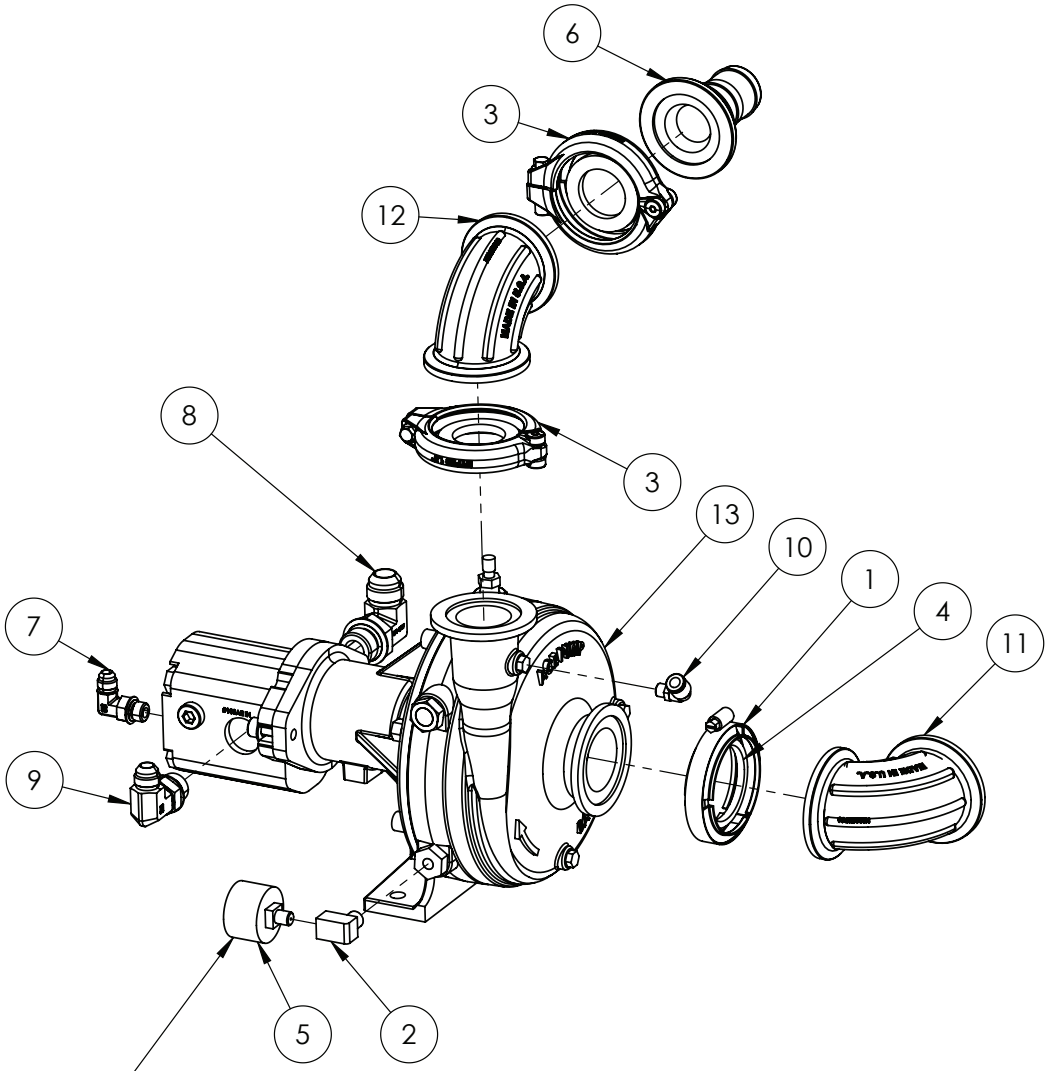

IF DESCRIPTION PREFIX IS ASSEMBLY DRAWING ONLY OR PRODUCTION DRAWING ONLY THE ITEM IS NOT FOR SALE			
ITEM	PART NUMBER	DESCRIPTION	QTY
1	FC220	2 FULL PORT WORM SCREW CLAMP	1
2	GA5025990	ELBOW, 90 DEGREE, 1/4" NPT MALE X 1/4" NPT FEMALE, BRASS	1
3	GA2000114	FLANGE CLAMP, AND GASKET, 1.5", SERIES 200, HYPRO	2
4	GA2000023	GASKET 2" BANJO SUIT 220	1
5	GA5026379	GAUGE, SUIT, ACE PUMP, 650 SERIES	1
6	GA5077833	HOSE BARB, FLANGE, STRAIGHT, 2 FLANGE X 1 1/2 HOSE, BANJO, M200150BRB	1
7	GA3500716	HYDRAULIC ADAPTOR ELBOW, 9/16" UNO TO 9/16" JIC, 90 DEG, S91-0909	1
8	GA3500715	HYDRAULIC ADAPTOR, ELBOW, 1 1/16" UNO TO 1 1/16" JIC, 90 DEG, S91-1717	1
9	GA3500761	HYDRAULIC ADAPTOR, ELBOW, 7/8" UNO TO 3/4" JIC, 90 DEG, S91-1214	1
10	GA5018339	PNEUMATIC FITTING, ELBOW, 90°, 8MM PUSH TYPE FITTING X 1/8' MALE THREAD	1
11	GA2000344	PLUMBING FITTING, SWEPT ELBOW, 90, 2", M220 FLANGE, M220SWP90, BANJO	1
12	GA2000434	PLUMBING FITTING, 2" FLANGED SWEEP ELBOW, 90	1
13	GA2000277	PUMP, CENTRIFUGAL, 644 LPM, OASIS RUN DRY SEAL, ACE	1
GA4909494 GOLDACRES		PRODUCTION DRAWING ONLY, CENTRIFUGAL PUMP, 644 LPM, ACE PUMP ASSEMBLY	REV 00

Suction Filter Assembly, Spray Pump, RH Pod, Hawkeye

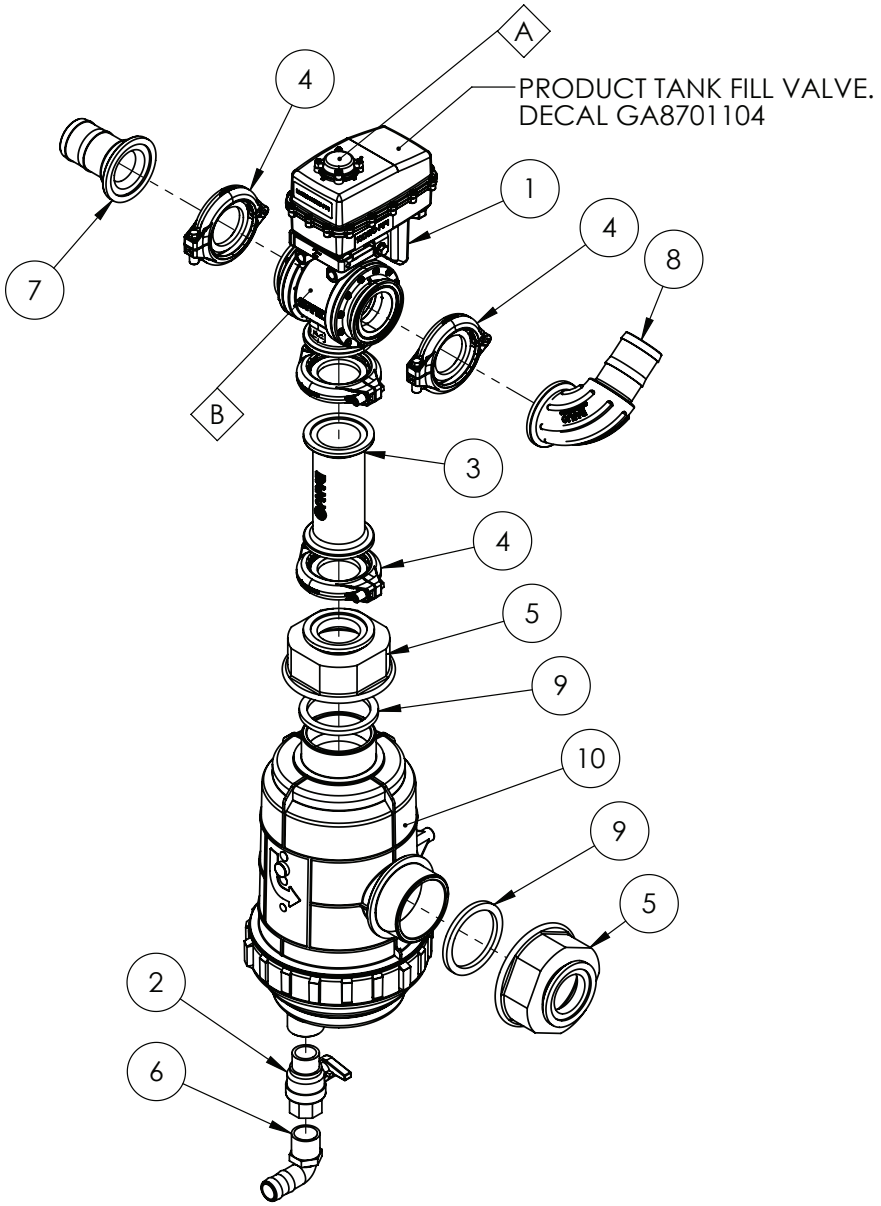

REPLACEMENT PARTS			
ITEM	PART NUMBER	DESCRIPTION	QTY
A	GA2000160	BALL VALVE, ACTUATOR ONLY, SUIT GA2000143, KZ VALVE	-
B	GA2000156	BALL VALVE, VALVE ONLY, SUIT GA2000143, KZ VALVE	-

IF DESCRIPTION PREFIX IS ASSEMBLY DRAWING ONLY OR PRODUCTION DRAWING ONLY THE ITEM IS NOT FOR SALE			
ITEM	PART NUMBER	DESCRIPTION	QTY
1	GA2000143	BALL VALVE, MOTORISED, 3 WAY, 2" FLANGE CONNECTION, BOTTOM LOAD ON/OFF/ON, 3 SECOND, KZ VALVE	1
2	GA5067620	BALL VALVE, 1" MALE / FEMALE, TEE HANDLE, BRASS	1
3	GA2000043	COUPLING, 2 X 2 FULL PORT FLANGE, 6", BANJO	1
4	GA2000115	FLANGE CLAMP, AND GASKET, 2", SERIES 220, HYPRO	4
5	GA4550450	FLANGE, M220 X 3" BSP FEMALE, PLASTIC	2
6	GA5077723	HOSE BARB, ELBOW, 90 DEGREE, 1" MALE X 1" HOSE, BANJO	1
7	GA5077859	HOSE BARB, STRAIGHT, 2 FLANGE X 2 HOSE, BANJO	1
8	GA2000071	PLUMBING FITTING, SWEEP ELBOW, 90, 2" FLANGE TO 2" BARB, M220BRBSWP90, BANJO	1
9	GA5076723	SEAL, EPDM, SUIT 3 FLANGE FITTING, BANJO, 300G	2
10	GA2000101	SUCTION FILTER, 3" 32 MESH, 3" BSP MALE THREADS, ARAG	1
GA4954075 GOLDACRES		PRODUCTION DRAWING ONLY, SPRAY PUMP SUCTION FILTER ASSEMBLY, SERIES 3	REV 01.B

Control Valve, Mounting, RH Pod, Hawkeye

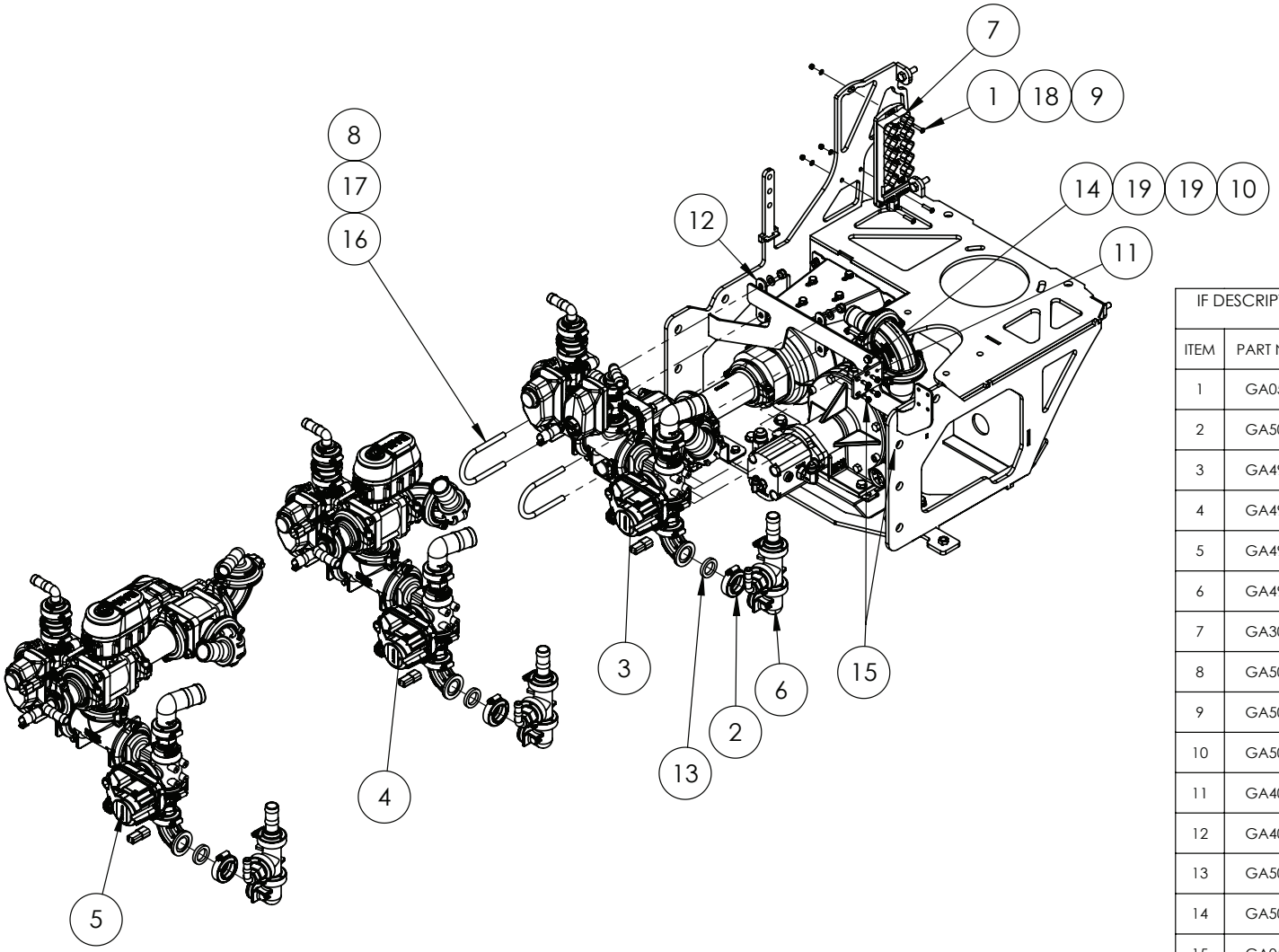

IF DESCRIPTION PREFIX IS ASSEMBLY DRAWING ONLY OR PRODUCTION DRAWING ONLY THE ITEM IS NOT FOR SALE			
ITEM	PART NUMBER	DESCRIPTION	QTY
1	GA0500178	BHCS M5 X 25 SS A2-70	3
2	GA5077664	CLAMP, WORM SCREW, 1", BANJO	1
3	GA4954070	CONTROL VALVE ASSEMBLY, 01, NO FRONT TANK	1
4	GA4909665	CONTROL VALVE ASSEMBLY, 02, WITH FRONT TANK	1
5	GA4909626	CONTROL VALVE ASSEMBLY, 03, PLUMBING DUAL LINES	1
6	GA4909716	CONTROL VALVE FITTING ASSEMBLY, HOPPER, HAWKEYE SERIES 3	1
7	GA3000309	I/O MODULE, 16 OUTPUT CHANNELS, CR2051, IFM, MODULE A	1
8	GA5000141	NUT M10 NYLOC ZP	4
9	GA5003974	NUT M5 NYLOC ZP	3
10	GA5052590	NUT M8 NYLOC SS	2
11	GA4000679	PLATE, BOOM REGULATOR VALVE BRACKET 90 DEGREE	1
12	GA4000215	PLATE, U-BOLT BACKING PLATE, SERIES 3, SP	2
13	GA5077818	SEAL, SUIT 1 MANIFOLD FITTING, RUBBER EPDM, BANJO, M100G	1
14	GA5004713	SET SCREW M8 X 25 SS A2-70	2
15	GA0500022	SET SCREW SELF TAPPING TRILOBE M6 X 16 ZP	4
16	GA0500130	U BOLT, ROUND TOP, M10 X 60 X 111mm	2
17	GA5000117	WASHER M10 FLAT SS HD	4
18	GA5003983	WASHER M5 FLAT SS	3
19	GA5003643	WASHER M8 FLAT SS HD	4
GA6101994-02 GOLDACRES		SPRAY PUMP POD, HAWKEYE, CONFIGURABLE, SP SERIES 3	REV 00

BUILD OPTIONS:

IF 65215 OR 65216 AND 80110 OPTIONED FIT ITEM (4)

IF 65215 OR 65216 OPTIONED FIT ITEMS (3)

IF 65217 OPTIONED FIT ITEM (5)

Control Valve, No Front Mount Tank, RH Pod, Hawkeye

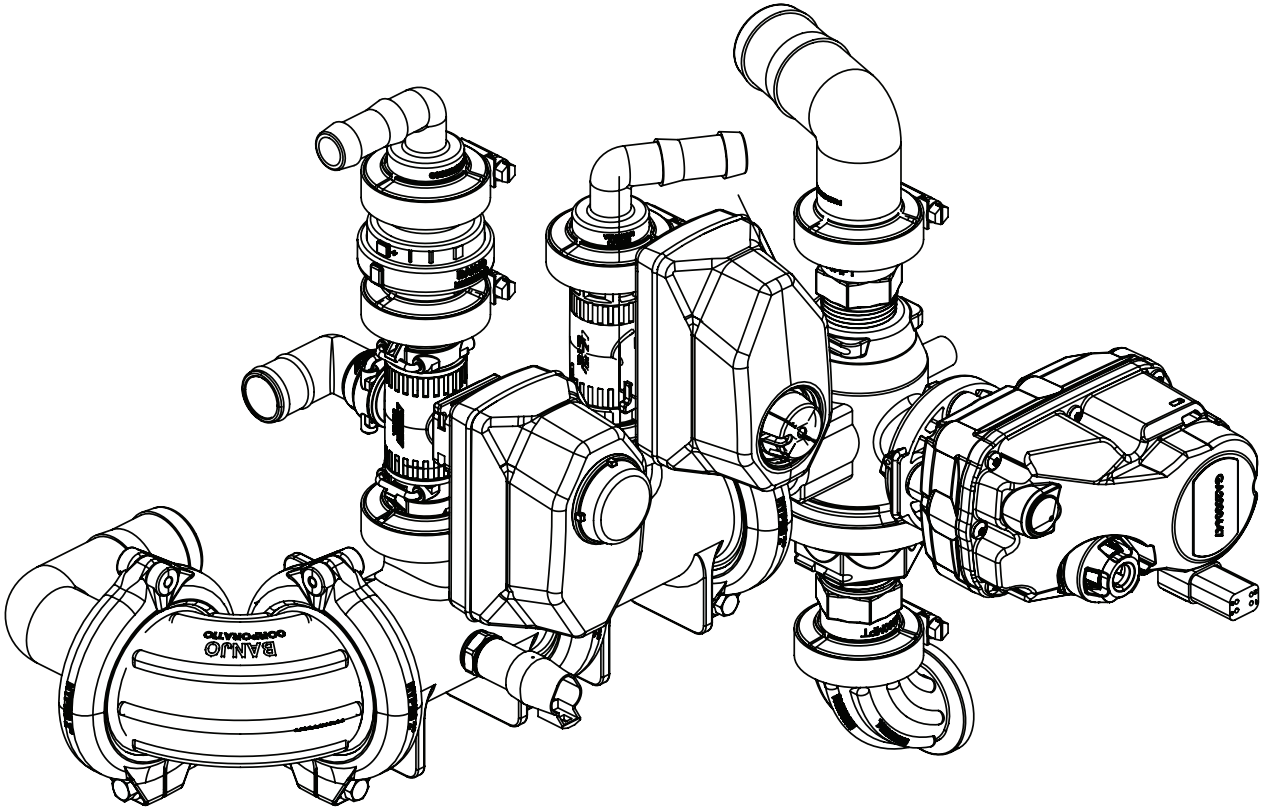

GA4954070 GOLDACRES	CONTROL VALVE ASSEMBLY, 01, NO FRONT TANK	REV 02

Control Valve Assembly, No Front Mount Tank, RH Pod, Hawkeye

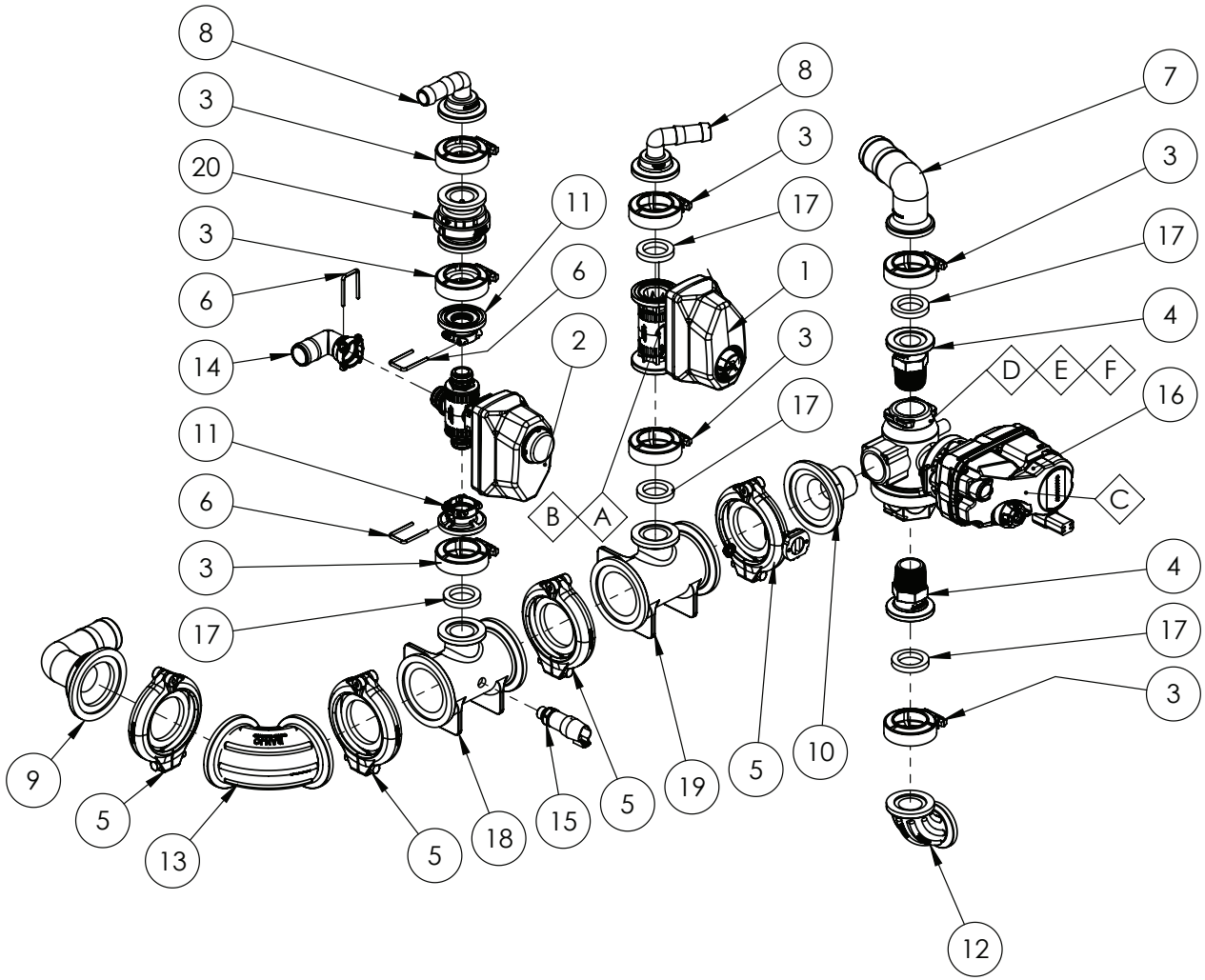

REPLACEMENT PARTS			
ITEM	PART NUMBER	DESCRIPTION	QTY
A	GA2000154	BALL VALVE, VALVE ONLY, SUIT GA2000141, KZ VALVE	-
B	GA5026374	REPAIR KIT, VALVE, KZ, TX2, SUIT, GA2000141	-
C	GA2000644	BALL VALVE ACTUATOR, EH9, 3.0 SEC 12V, 90 DEGREES - 20E7S-D01, SUIT GA2000647 REG VALVE, KZ VALVE	-
D	GA2000067	REGULATOR VALVE, VALVE ONLY, SUIT GA2000065, KZ VALVE	-
E	GA4953975	BUTTRESS ASSEMBLY, SUIT, KZ VALVE, INCLUDES O-RINGS, 800562, SUITS GA2000067, GA2000065	-
F	GA4953970	O-RING, SUIT, KZ VALVE, END CAP, #229, EPDM, QC3-134, SUITS GA2000067, GA2000065	-

IF DESCRIPTION PREFIX IS ASSEMBLY DRAWING ONLY OR PRODUCTION DRAWING ONLY THE ITEM IS NOT FOR SALE			
ITEM	PART NUMBER	DESCRIPTION	QTY
1	GA2000141	BALL VALVE, MOTORIZED, 2 WAY, 1" FLANGE CONNECTION, 0.5 SECOND, KZ VALVE, TX2	1
2	GA2000634	BALL VALVE, MOTORIZED, 3 WAY, 1/2", PIN PONNECTION, KZ VALVE, EH7	1
3	GA5077664	CLAMP, WORM SCREW, 1", BANJO	7
4	GA5077820	COUPLING, FLANGED, 1 FLANGE X 1 MALE THREAD, BANJO	2
5	GA2000115	FLANGE CLAMP, AND GASKET, 2", SERIES 220, HYPRO	4
6	GA2000625	HAIRPIN, TO SUIT TX2 VALVE, 1/2 ", 106-0018	3
7	GA2000138	HOSE BARB, ELBOW, 90 DEGREE, 1" FLANGE, X 1 1/2" HOSE, BANGO M100150BRB90	1
8	GA5077803	HOSE BARB, ELBOW, 90 DEGREE, 1 FLANGE X 3/4 HOSE, BANJO, M100075BRB90	2
9	GA5077856	HOSE BARB, 2" FP FLANGE, 1-1/2" HB, 90 DEGREE	1
10	GA4551165	PLUMBING COUPLING, M220 FLANGE TO 1" MALE NPT THREAD	1
11	GA2000636	PLUMBING FITTING, M100 FLANGE X PIN CONNECTION, KZ	2
12	GA5026057	PLUMBING FITTING, SWEPT ELBOW, 90, 1", M100 FLANGE, M100SWP90, BANJO	1
13	GA2000344	PLUMBING FITTING, SWEPT ELBOW, 90, 2", M220 FLANGE, M220SWP90, BANJO	1
14	GA2000606	PLUMBING FITTING, 1" ELBOW, HOSE BARB X FEMALE QD, 211-0119, KZ VALVE	1
15	GA3000316	PRESSURE SENSOR TRANSDUCER, 0-25 BAR, 0.5-4.5V, IFM	1
16	GA2000647	REGULATOR VALVE, 1" NPT, FULL PORT, 3 WAY SIDE LOAD - NF3F23, WITH EH9 ACTUATOR, 3.0 SEC 12V, 90 DEGREES - 20E7S-D01, KZ VALVE	1
17	GA5077818	SEAL, SUIT 1 MANIFOLD FITTING, RUBBER EPDM, BANJO, M100G	7
18	GA2000569	TEE, 2" FULL PORT X 1", W/ 1/4" BSP FEMALE THREAD, FLANGE, M220100TEEC1, BANJO	1
19	GA2000046	TEE, 2" FULL PORT X 2" FULL PORT X 1", FLANGE, BANJO	1
20	GA5077889	VALVE, CHECK, 1" MANIFOLD, FLANGE, BANJO, MCV100	1
GA4954070 GOLDACRES		CONTROL VALVE ASSEMBLY, 01, NO FRONT TANK	REV 02

Control Valve, With Front Mount Tank, RH Pod, Hawkeye

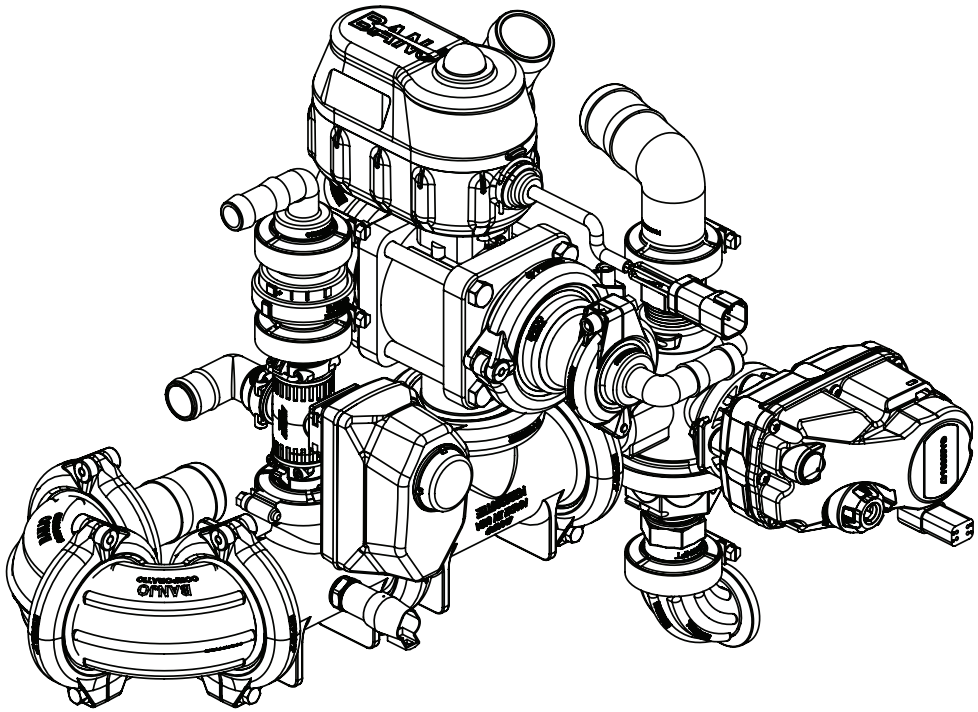

GA4909665 GOLDACRES	CONTROL VALVE ASSEMBLY, 02, WITH FRONT TANK	REV 02

Control Valve Assembly, With Front Mount Tank, RH Pod, Hawkeye

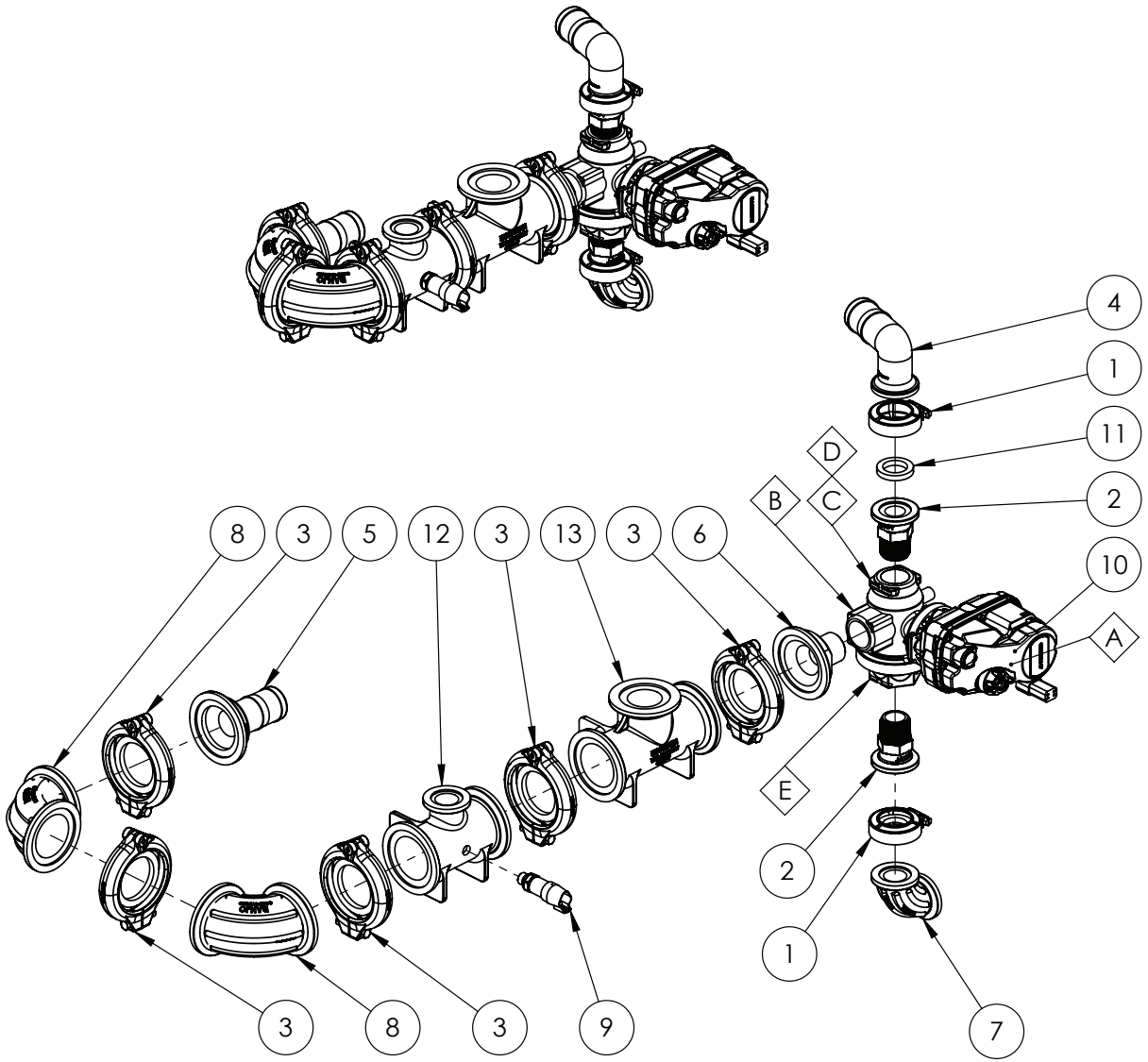

REPLACEMENT PARTS			
ITEM	PART NUMBER	DESCRIPTION	QTY
A	GA2000644	BALL VALVE ACTUATOR, EH9, 3.0 SEC 12V, 90 DEGREES - 20E7S-D01, SUIT GA2000647 REG VALVE, KZ VALVE	-
B	GA2000067	REGULATOR VALVE, VALVE ONLY, 1" NPT, FULL PORT, 3-WAY SIDE LOAD, NF3F23, KZ VALVE	-
C	GA5073805	FITTING, 2" HEX, 1" FNPT, KZ VALVE, QX4-127-N, SUITS GA2000067, GA2000065	-
D	GA4953970	O-RING, SUIT, KZ VALVE, END CAP, #229, EPDM, QC3-134, SUITS GA2000067, GA2000065	-
E	GA4953975	BUTTRESS ASSEMBLY, SUIT, KZ VALVE, INCLUDES O-RINGS, 800562, SUITS GA2000067, GA2000065	-

IF DESCRIPTION PREFIX IS ASSEMBLY DRAWING ONLY OR PRODUCTION DRAWING ONLY THE ITEM IS NOT FOR SALE			
ITEM	PART NUMBER	DESCRIPTION	QTY
1	GA5077664	CLAMP, WORM SCREW, 1", BANJO	2
2	GA5077820	COUPLING, FLANGED, 1 FLANGE X 1 MALE THREAD, BANJO	2
3	GA2000115	FLANGE CLAMP, AND GASKET, 2", SERIES 220, HYPRO	5
4	GA2000138	HOSE BARB, ELBOW, 90 DEGREE, 1" FLANGE, X 1 1/2" HOSE, BANGO M100150BRB90	1
5	GA2000047	HOSE BARB, FLANGE, STRAIGHT, 2" FLANGE X 1 1/2" HOSE, BANJO	1
6	GA4551165	PLUMBING COUPLING, M220 FLANGE TO 1" MALE NPT THREAD	1
7	GA5026057	PLUMBING FITTING, SWEPT ELBOW, 90, 1", M100 FLANGE, M100SWP90, BANJO	1
8	GA2000344	PLUMBING FITTING, SWEPT ELBOW, 90, 2", M220 FLANGE, M220SWP90, BANJO	2
9	GA3000316	PRESSURE SENSOR TRANSDUCER, 0-25 BAR, 0.5-4.5V, IFM	1
10	GA2000647	REGULATOR VALVE, 1" NPT, FULL PORT, 3 WAY SIDE LOAD - NF3F23, WITH EH9 ACTUATOR, 3.0 SEC 12V, 90 DEGREES - 20E7S-D01, KZ VALVE	1
11	GA5077818	SEAL, SUIT 1 MANIFOLD FITTING, RUBBER EPDM, BANJO, M100G	2
12	GA2000569	TEE, 2" FULL PORT X 1", W/ 1/4" BSP FEMALE THREAD, FLANGE, M220100TEEC1, BANJO	1
13	GA2000049	TEE, 2" FULL PORT X 2", FLANGE, M220200TEE, BANJO	1
GA4909665 GOLDACRES		CONTROL VALVE ASSEMBLY, 02, WITH FRONT TANK	REV 02

Control Valve Assembly, With Front Mount Tank, RH Pod, Hawkeye

REPLACEMENT PARTS			
ITEM	PART NUMBER	DESCRIPTION	QTY
A	GA5026388	REPAIR KIT, ELECTRIC REGULATING VALVE, BANJO, SUIT, GA2000638	-

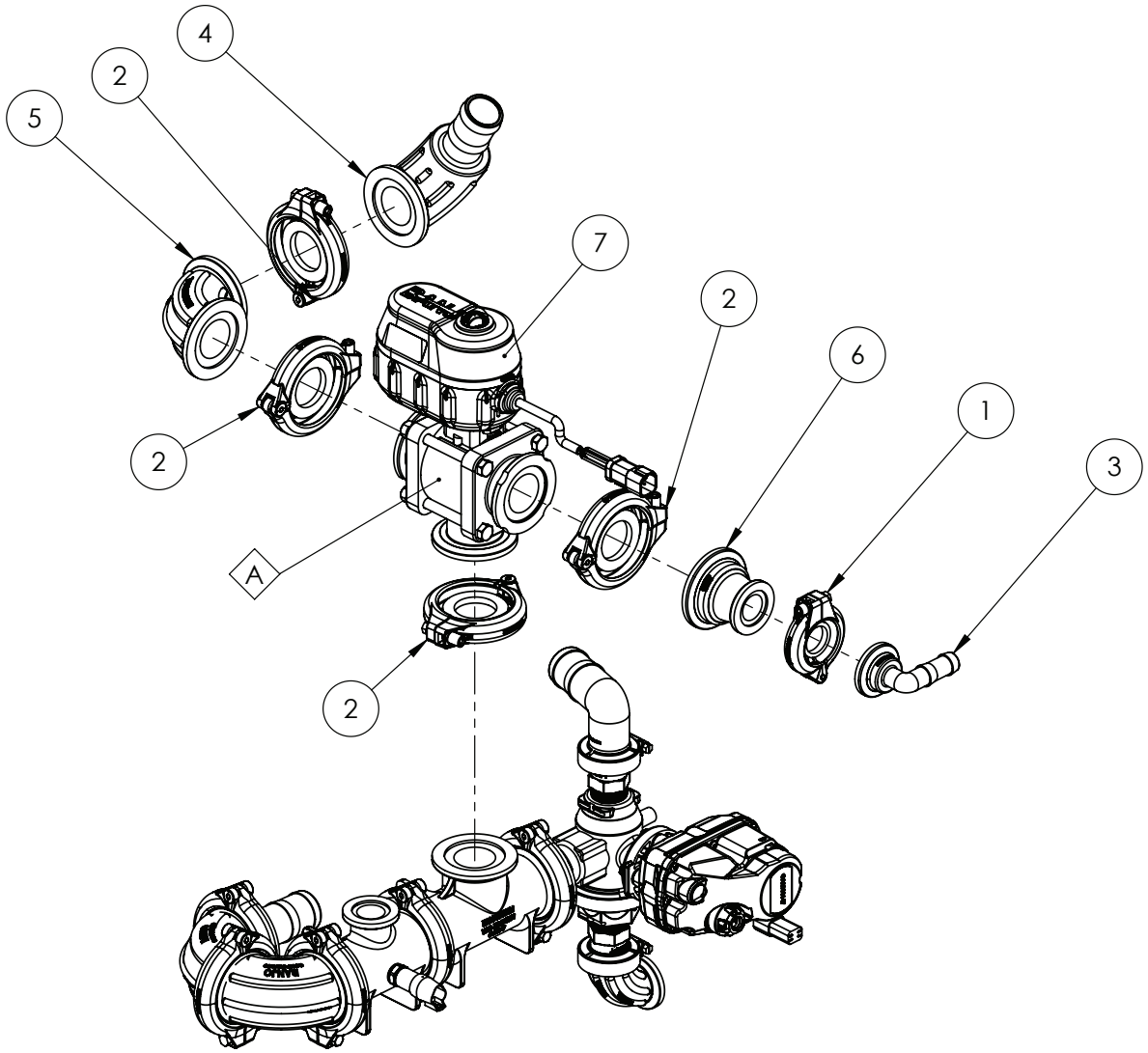

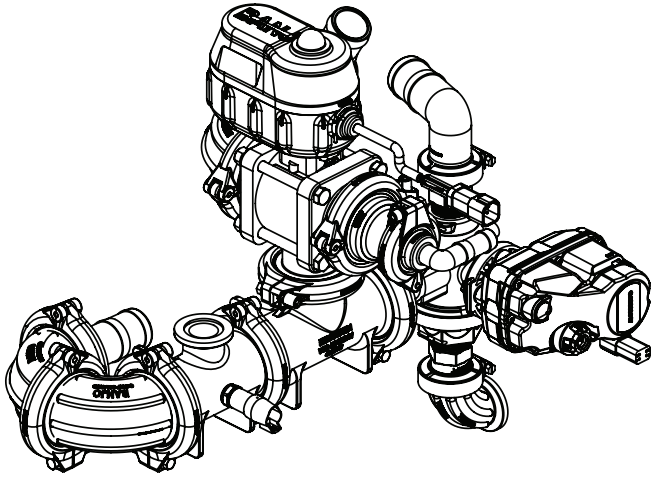

IF DESCRIPTION PREFIX IS ASSEMBLY DRAWING ONLY OR PRODUCTION DRAWING ONLY THE ITEM IS NOT FOR SALE			
ITEM	PART NUMBER	DESCRIPTION	QTY
1	GA2000113	FLANGE CLAMP, AND GASKET, 1", SERIES 100, HYPRO	1
2	GA2000114	FLANGE CLAMP, AND GASKET, 1.5", SERIES 200, HYPRO	4
3	GA5077803	HOSE BARB, ELBOW, 90 DEGREE, 1 FLANGE X 3/4 HOSE, BANJO, M100075BRB90	1
4	GA2000401	PLUMBING FITTING, SWEPT ELBOW, 90, 1.5" HOSE BARB, M200 FLANGE, M200150BRBSWP90, BANJO	1
5	GA2000434	PLUMBING FITTING, 2" FLANGED SWEEP ELBOW, 90	1
6	GA5077828	REDUCING FLANGE, 2" FLANGE X 1" FLANGE, BANJO	1
7	GA2000638	VALVE, BALL, ELECTRIC 3 WAY, 2" STD PORT, BANJO, MEVX201BLF2A	1
GA4909665 GOLDACRES		CONTROL VALVE ASSEMBLY, 02, WITH FRONT TANK	REV 02

Control Valve Assembly, With Front Mount Tank, RH Pod, Hawkeye

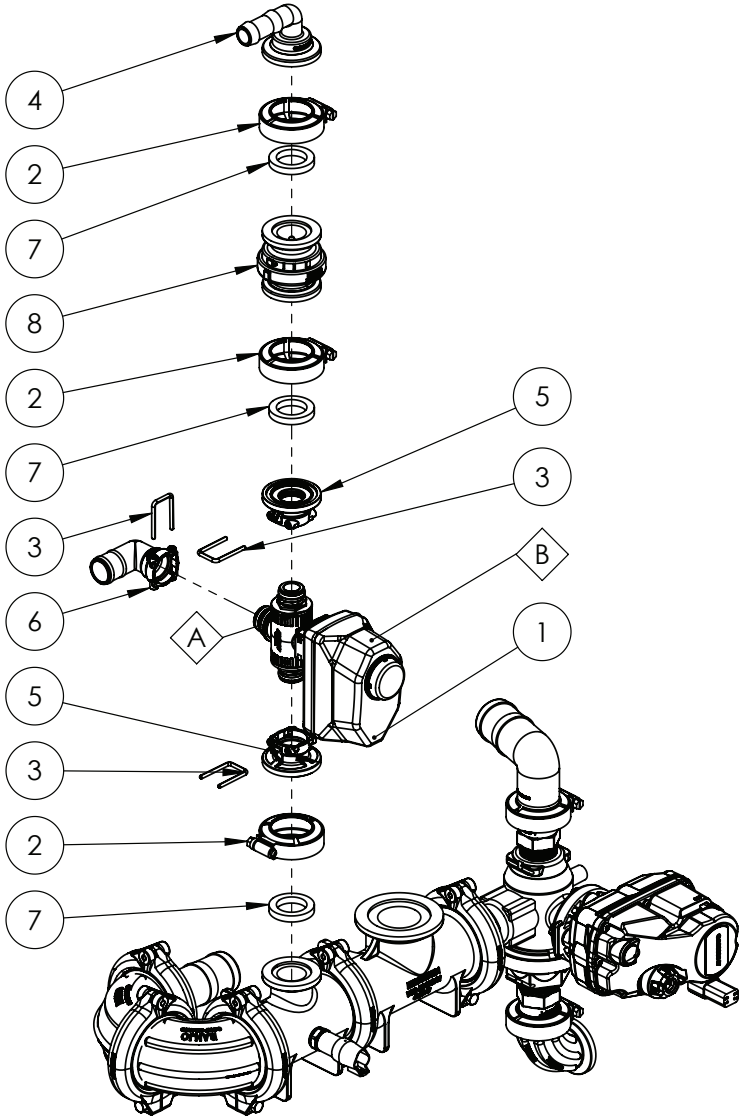

REPLACEMENT PARTS			
ITEM	PART NUMBER	DESCRIPTION	QTY
A	GA5026382	VALVE KIT, 1/2", TX2, POLY, QD, 3-WAY, BL, DIV, FULL PORT, SS BALL, INLINE TO FLOW, EH7, SUIT, GA2000638	-
B	GA5026383	ACTUATOR ONLY, EH7, ON/OFF, 0.5s@12VDC, (+) SIG OPEN, SOLID STATE, NO FB, 3ST WP3T, 3-WAY FLAG	-

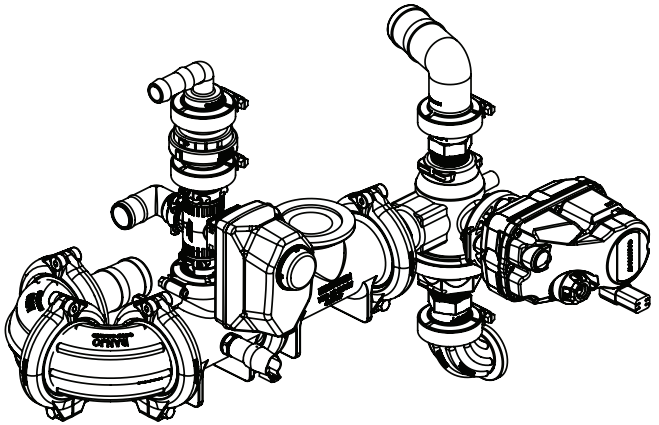

IF DESCRIPTION PREFIX IS ASSEMBLY DRAWING ONLY OR PRODUCTION DRAWING ONLY THE ITEM IS NOT FOR SALE			
ITEM	PART NUMBER	DESCRIPTION	QTY
1	GA2000634	BALL VALVE, MOTORIZED, 3 WAY, 1/2", PIN PONNECTION, KZ VALVE, EH7	1
2	GA5077664	CLAMP, WORM SCREW, 1", BANJO	3
3	GA2000625	HAIRPIN, TO SUIT TX2 VALVE, 1/2 ", 106-0018	3
4	GA5077803	HOSE BARB, ELBOW, 90 DEGREE, 1 FLANGE X 3/4 HOSE, BANJO, M100075BRB90	1
5	GA2000636	PLUMBING FITTING, M100 FLANGE X PIN CONNECTION, KZ	2
6	GA2000606	PLUMBING FITTING, 1" ELBOW, HOSE BARB X FEMALE QD, 211-0119, KZ VALVE	1
7	GA5077818	SEAL, SUIT 1 MANIFOLD FITTING, RUBBER EPDM, BANJO, M100G	3
8	GA5077889	VALVE, CHECK, 1" MANIFOLD, FLANGE, BANJO, MCV100	1
GA4909665 GOLDACRES		CONTROL VALVE ASSEMBLY, 02, WITH FRONT TANK	REV 02

Control Valve Assembly, Dual Lines, RH Pod, Hawkeye

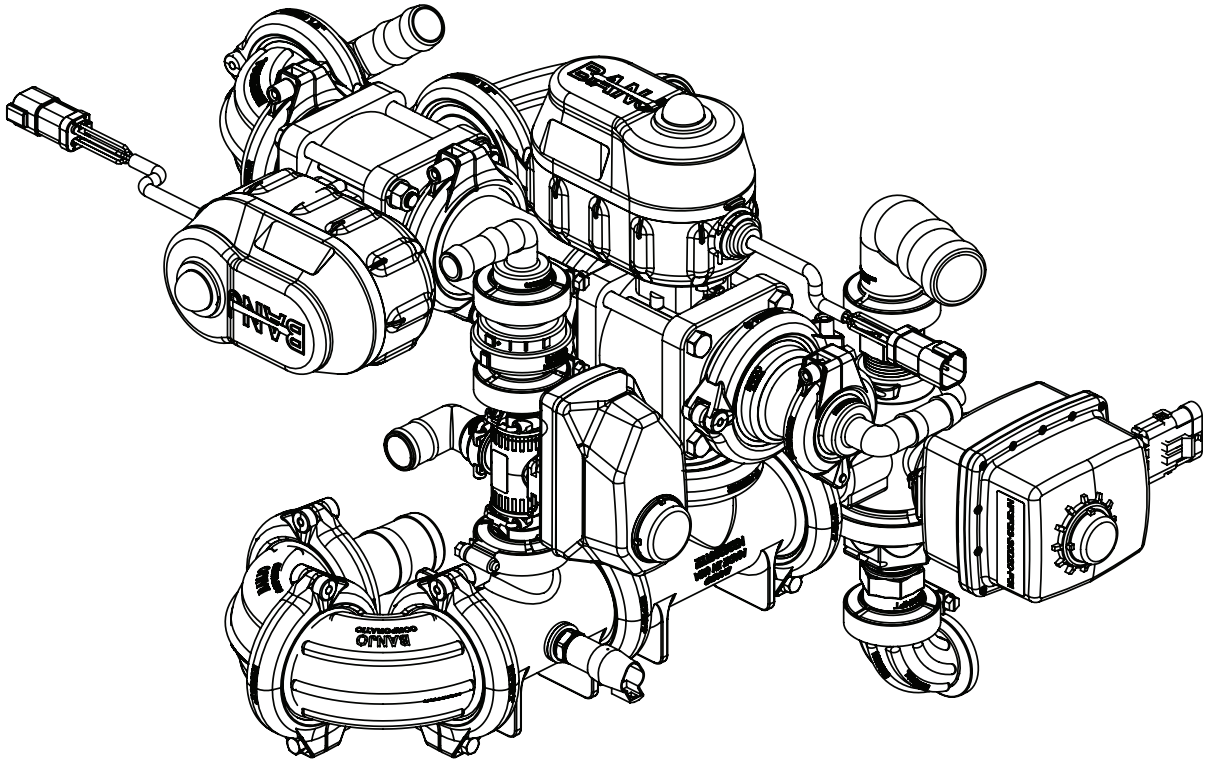

GA4909626	CONTROL VALVE ASSEMBLY, 03, PLUMBING DUAL LINES	REV
GOLDACRES		01

Control Valve Assembly, Dual Lines, RH Pod, Hawkeye

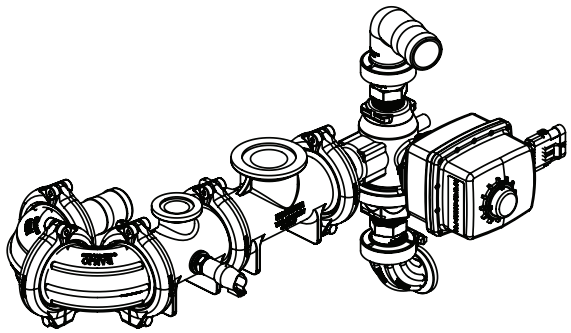

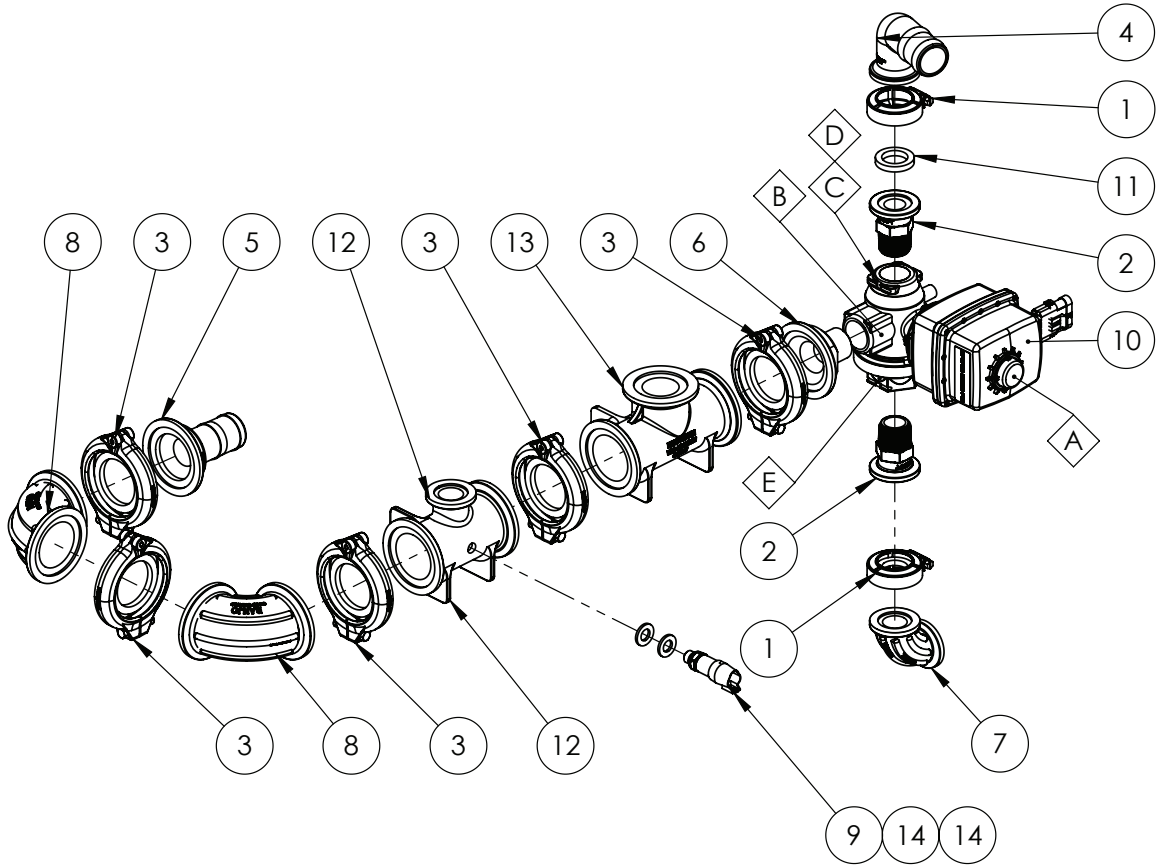

REPLACEMENT PARTS			
ITEM	PART NUMBER	DESCRIPTION	QTY
A	GA2000066	REGULATOR VALVE, ACTUATOR ONLY, 0.8 SEC 12V, SUIT GA2000065, KZ VALVE	-
B	GA2000067	REGULATOR VALVE, VALVE ONLY, SUIT GA2000065, KZ VALVE	-
C	GA5073805	FITTING, 2" HEX, 1" FNPT, KZ VALVE, QX4-127-N, SUITS GA2000067, GA2000065	-
D	GA4953970	O-RING, SUIT, KZ VALVE, END CAP, #229, EPDM, QC3-134, SUITS GA2000067, GA2000065	-
E	GA4953975	BUTTRESS ASSEMBLY, SUIT, KZ VALVE, INCLUDES O-RINGS, 800562, SUITS GA2000067, GA2000065	-

IF DESCRIPTION PREFIX IS ASSEMBLY DRAWING ONLY OR PRODUCTION DRAWING ONLY THE ITEM IS NOT FOR SALE			
ITEM	PART NUMBER	DESCRIPTION	QTY
1	GA5077664	CLAMP, WORM SCREW, 1", BANJO	2
2	GA5077820	COUPLING, FLANGED, 1 FLANGE X 1 MALE THREAD, BANJO	2
3	GA2000115	FLANGE CLAMP, AND GASKET, 2", SERIES 220, HYPRO	5
4	GA2000138	HOSE BARB, ELBOW, 90 DEGREE, 1" FLANGE, X 1 1/2" HOSE, BANGO M100150BRB90	1
5	GA2000047	HOSE BARB, FLANGE, STRAIGHT, 2" FLANGE X 1 1/2" HOSE, BANJO	1
6	GA4551165	PLUMBING COUPLING, M220 FLANGE TO 1" MALE NPT THREAD	1
7	GA5026057	PLUMBING FITTING, SWEPT ELBOW, 90, 1", M100 FLANGE, M100SWP90, BANJO	1
8	GA2000344	PLUMBING FITTING, SWEPT ELBOW, 90, 2", M220 FLANGE, M220SWP90, BANJO	2
9	GA3000316	PRESSURE SENSOR TRANSDUCER, 0-25 BAR, 0.5-4.5V, IFM	1
10	GA2000069	REGULATOR VALVE, 1" NPT, FULL PORT, 3 WAY, 0.8 SEC 12V, KZ VALVE	1
11	GA5077818	SEAL, SUIT 1 MANIFOLD FITTING, RUBBER EPDM, BANJO, M100G	2
12	GA2000569	TEE, 2" FULL PORT X 1", W/ 1/4" BSP FEMALE THREAD, FLANGE, M220100TEEC1, BANJO	1
13	GA2000049	TEE, 2" FULL PORT X 2", FLANGE, M220200TEE, BANJO	1
14	GA5000577	WASHER M12 FLAT SS HD	2
GA4909626 GOLDACRES		CONTROL VALVE ASSEMBLY, 03, PLUMBING DUAL LINES	REV 01

Control Valve Assembly, Dual Lines, RH Pod, Hawkeye

REPLACEMENT PARTS			
ITEM	PART NUMBER	DESCRIPTION	QTY
A	GA5026388	REPAIR KIT, ELECTRIC REGULATING VALVE, BANJO, SUIT, GA2000638	-

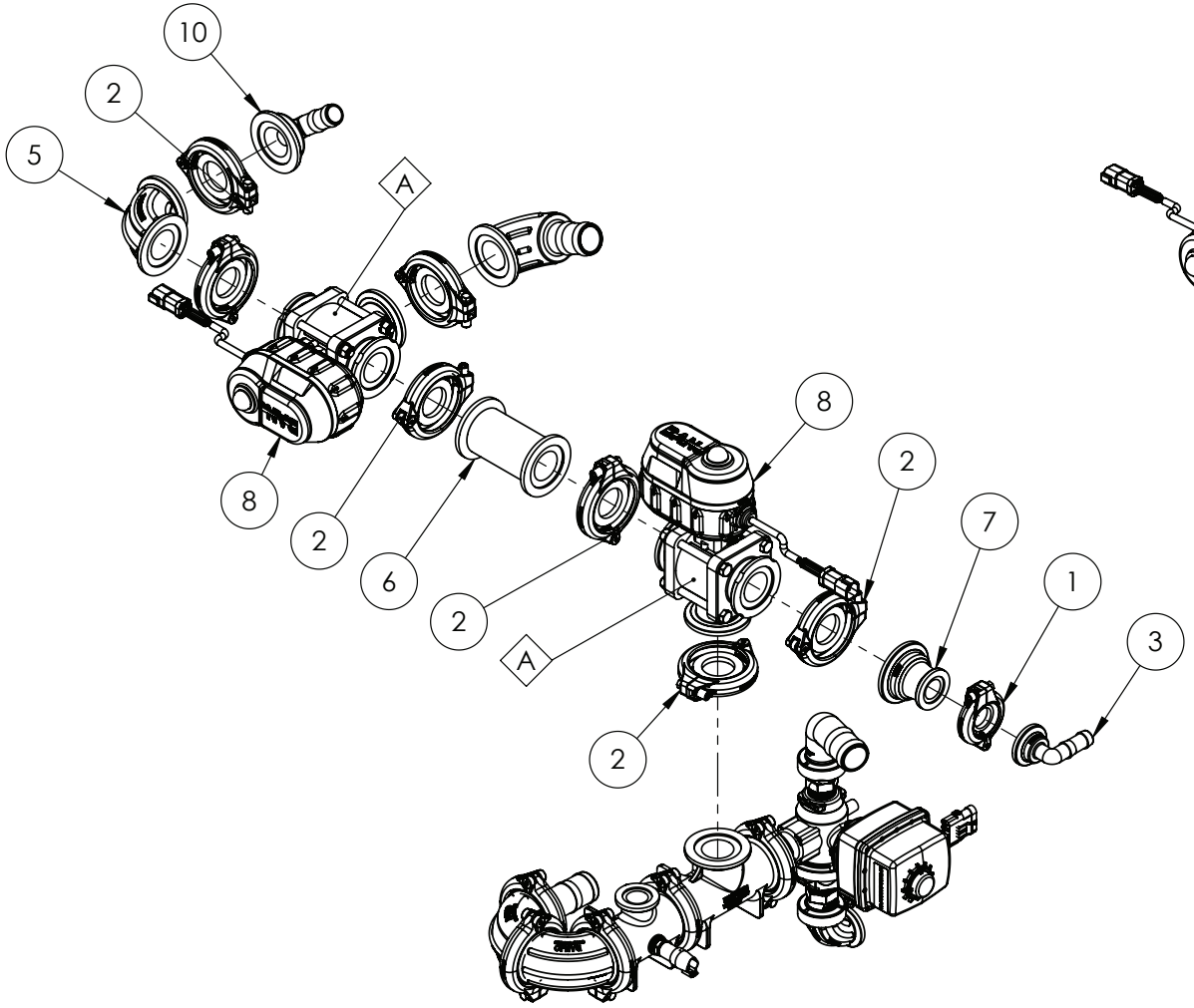

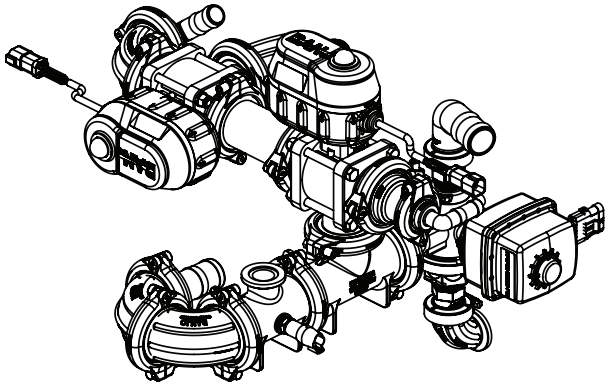

IF DESCRIPTION PREFIX IS ASSEMBLY DRAWING ONLY OR PRODUCTION DRAWING ONLY THE ITEM IS NOT FOR SALE			
ITEM	PART NUMBER	DESCRIPTION	QTY
1	GA2000113	FLANGE CLAMP, AND GASKET, 1", SERIES 100, HYPRO	1
2	GA2000114	FLANGE CLAMP, AND GASKET, 1.5", SERIES 200, HYPRO	7
3	GA5077803	HOSE BARB, ELBOW, 90 DEGREE, 1 FLANGE X 3/4 HOSE, BANJO, M100075BRB90	1
4	GA2000401	PLUMBING FITTING, SWEPT ELBOW, 90, 1.5" HOSE BARB, M200 FLANGE, M200150BRBSWP90, BANJO	1
5	GA2000434	PLUMBING FITTING, 2" FLANGED SWEEP ELBOW, 90	1
6	GA5077840	PLUMBING COUPLING, STRAIGHT, 2" FLANGE X " FLANGE X 4 1/2" LONG, BANJO	1
7	GA5077828	REDUCING FLANGE, 2" FLANGE X 1" FLANGE, BANJO	1
8	GA2000638	VALVE, BALL, ELECTRIC 3 WAY, 2" STD PORT, BANJO, MEVX201BLF2A	2
9	GA5000577	WASHER M12 FLAT SS HD	2
10	GA5077827	HOSE BARB, ELBOW, 90 DEGREE, 2" PORT FLANGE X 1" HOSE, BANJO	1
GA4909626 GOLDACRES		CONTROL VALVE ASSEMBLY, 03, PLUMBING DUAL LINES	REV 01

Control Valve Assembly, Dual Lines, RH Pod, Hawkeye

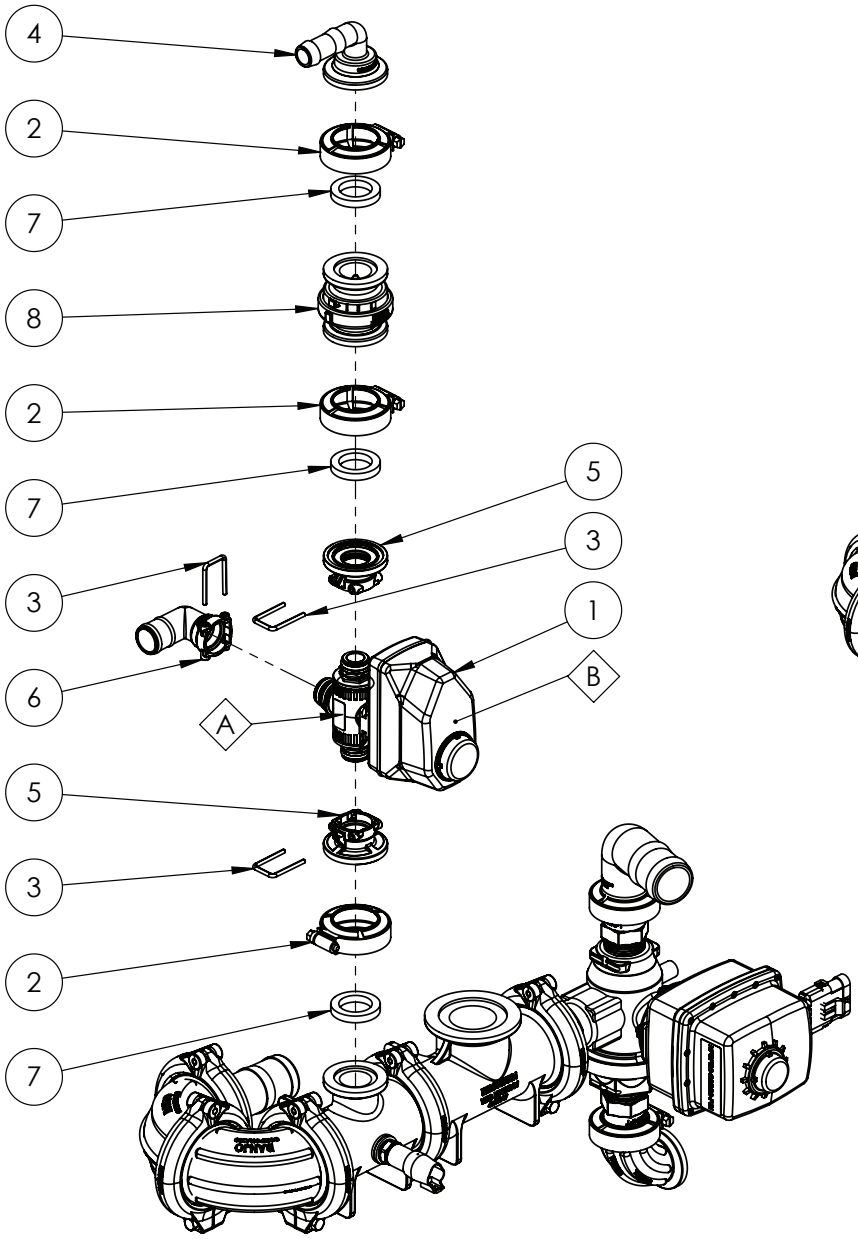

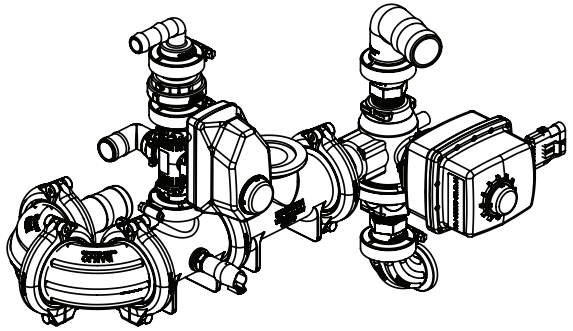

REPLACEMENT PARTS			
ITEM	PART NUMBER	DESCRIPTION	QTY
A	GA5026382	VALVE KIT, 1/2", TX2, POLY, QD, 3-WAY, BL, DIV, FULL PORT, SS BALL, INLINE TO FLOW, EH7, SUIT, GA2000638	-
B	GA5026383	ACTUATOR ONLY, EH7, ON/OFF, 0.5s@12VDC, (+) SIG OPEN, SOLID STATE, NO FB, 3ST WP3T, 3-WAY FLAG	-

IF DESCRIPTION PREFIX IS ASSEMBLY DRAWING ONLY OR PRODUCTION DRAWING ONLY THE ITEM IS NOT FOR SALE			
ITEM	PART NUMBER	DESCRIPTION	QTY
1	GA2000634	BALL VALVE, MOTORIZED, 3 WAY, 1/2", PIN PONNECTION, KZ VALVE, EH7	1
2	GA5077664	CLAMP, WORM SCREW, 1", BANJO	3
3	GA2000625	HAIRPIN, TO SUIT TX2 VALVE, 1/2 ", 106-0018	3
4	GA5077803	HOSE BARB, ELBOW, 90 DEGREE, 1 FLANGE X 3/4 HOSE, BANJO, M100075BRB90	1
5	GA2000636	PLUMBING FITTING, M100 FLANGE X PIN CONNECTION, KZ	2
6	GA2000606	PLUMBING FITTING, 1" ELBOW, HOSE BARB X FEMALE QD, 211-0119, KZ VALVE	1
7	GA5077818	SEAL, SUIT 1 MANIFOLD FITTING, RUBBER EPDM, BANJO, M100G	3
8	GA5077889	VALVE, CHECK, 1" MANIFOLD, FLANGE, BANJO, MCV100	1
9	GA5000577	WASHER M12 FLAT SS HD	2
GA4909626 GOLDACRES		CONTROL VALVE ASSEMBLY, 03, PLUMBING DUAL LINES	REV 01

Control Valve Fitting Assembly, Hopper, RH Pod, Hawkeye

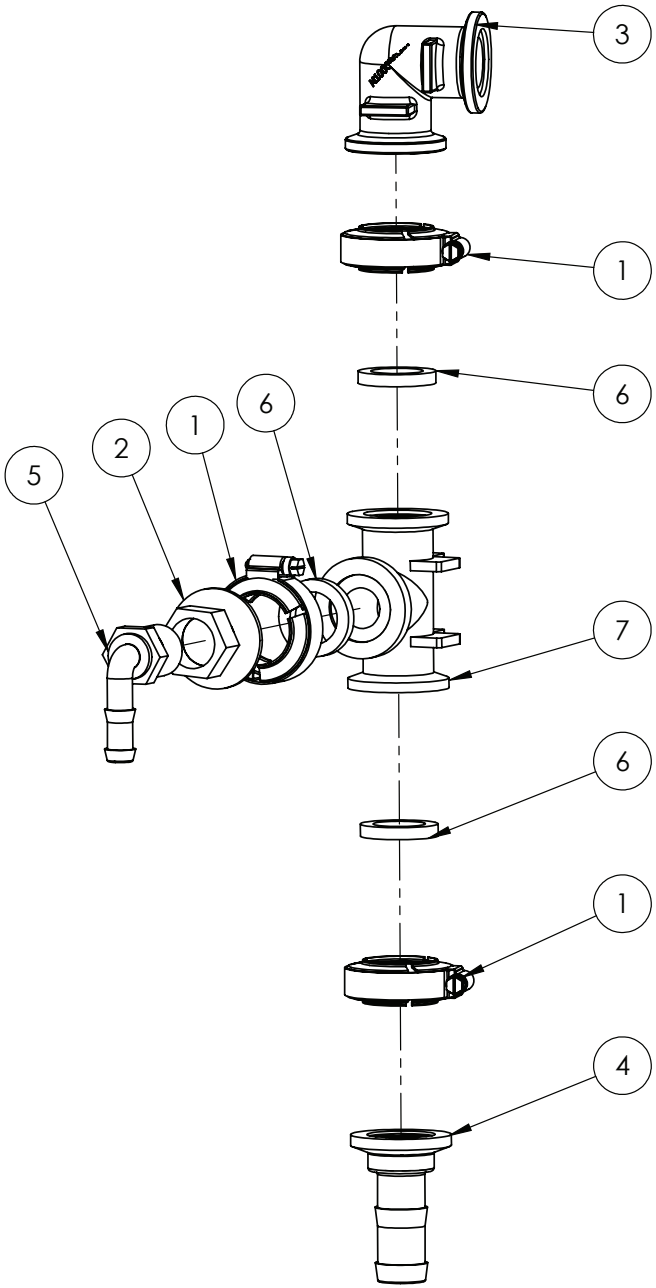

IF DESCRIPTION PREFIX IS ASSEMBLY DRAWING ONLY OR PRODUCTION DRAWING ONLY THE ITEM IS NOT FOR SALE			
ITEM	PART NUMBER	DESCRIPTION	QTY
1	GA5077664	CLAMP, WORM SCREW, 1", BANJO	3
2	GA5077804	COUPLING, 1" FLANGE X 3/4" FEMALE THREAD, BANJO	1
3	GA5077815	ELBOW, 90 DEGREE, 1" FLANGE X 1" FLANGE, BANJO	1
4	GA5077811	HOSE BARB, STRAIGHT, 1 FLANGE X 1 HOSE, BANJO	1
5	GA5077710	HOSE BARB, ELBOW, 90 DEGREE, 3/4 MALE THREAD X 1/2 HOSE, BANJO	1
6	GA5077818	SEAL, SUIT 1 MANIFOLD FITTING, RUBBER EPDM, BANJO, M100G	3
7	GA5077823	TEE, 1 FLANGE X 1 FLANGE X 1 FLANGE, BANJO, M100TEE	1
GA4909716 GOLDACRES		CONTROL VALVE FITTING ASSEMBLY, HOPPER, HAWKEYE SERIES 3	REV 00

Pressure Filter Mounting & Control Valve Assembly, RH Pod, Hawkeye

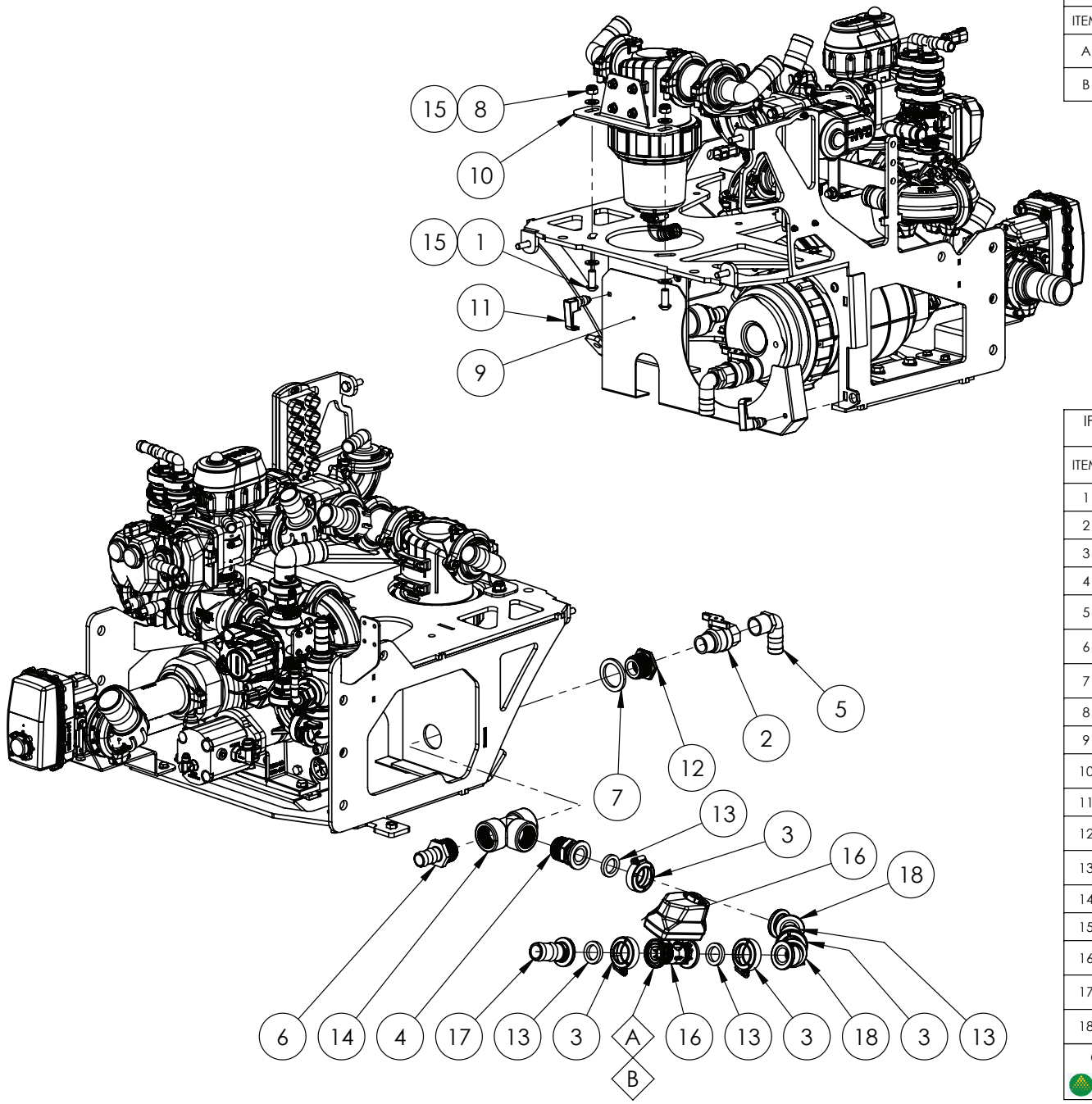

REPLACEMENT PARTS			
ITEM	PART NUMBER	DESCRIPTION	QTY
A	GA2000154	BALL VALVE, VALVE ONLY, SUIT GA2000141, KZ VALVE	-
B	GA5026374	REPAIR KIT, VALVE, KZ, TX2, SUIT, GA2000141	-

IF DESCRIPTION PREFIX IS ASSEMBLY DRAWING ONLY OR PRODUCTION DRAWING ONLY THE ITEM IS NOT FOR SALE			
ITEM	PART NUMBER	DESCRIPTION	QTY
1	GA5048530	BHCS M12 x 30 SS A2-70	2
2	GA5067620	BALL VALVE, 1" MALE / FEMALE, TEE HANDLE, BRASS	1
3	GA5077664	CLAMP, WORM SCREW, 1", BANJO	4
4	GA5077808	FLANGE 1" X 1 1/4" MALE THREAD	1
5	GA5077723	HOSE BARB, ELBOW, 90 DEGREE, 1" MALE X 1" HOSE, BANJO	1
6	GA5077728	HOSE BARB, STRAIGHT, 1 1/4" MALE THREAD X 1" HOSE, BANJO	1
7	GA4000632	MACHINED, SPACER RING, 44mm, POD PLUMBING INSTALLATION FITTING	1
8	GA5012461	NUT M12 NYLOC ZP	2
9	GA4416030	PLATE, FRONT COVER, PUMP POD FRAME, S3, SP	1
10	GA4909492	PRODUCTION DRAWING ONLY, PRESSURE FILTER ASSEMBLY, CENTRIFUGAL PUMP, S3, SP	1
11	GA5066600	RAWL ACTION LATCH BLACK	2
12	GA5078016	REDUCING BUSH, 1 1/4 MALE THREAD X 1 FEMALE THREAD, BANJO	1
13	GA5077818	SEAL, SUIT 1 MANIFOLD FITTING, RUBBER EPDM, BANJO, M100G	4
14	GA5078152	TEE, THREADED, 1 1/4 FEMALE, BANJO	1
15	GA5000577	WASHER M12 FLAT SS HD	4
16	GA2000141	BALL VALVE, MOTORIZED, 2 WAY, 1" FLANGE CONNECTION, 0.5 SECOND, KZ VALVE, TX2	1
17	GA5077806	HOSE BARB, STRAIGHT, 1 FLANGE X 1 1/4 HOSE, BANJO	1
18	GA5077814	ELBOW, 45 DEGREE, 1 FLANGE X 1 FLANGE, BANJO, M100CPG45	2
GA6101994-03 GOLDACRES		SPRAY PUMP POD, HAWKEYE, CONFIGURABLE, SP SERIES 3	REV 00

Pressure Filter Assembly, RH Pod, Hawkeye

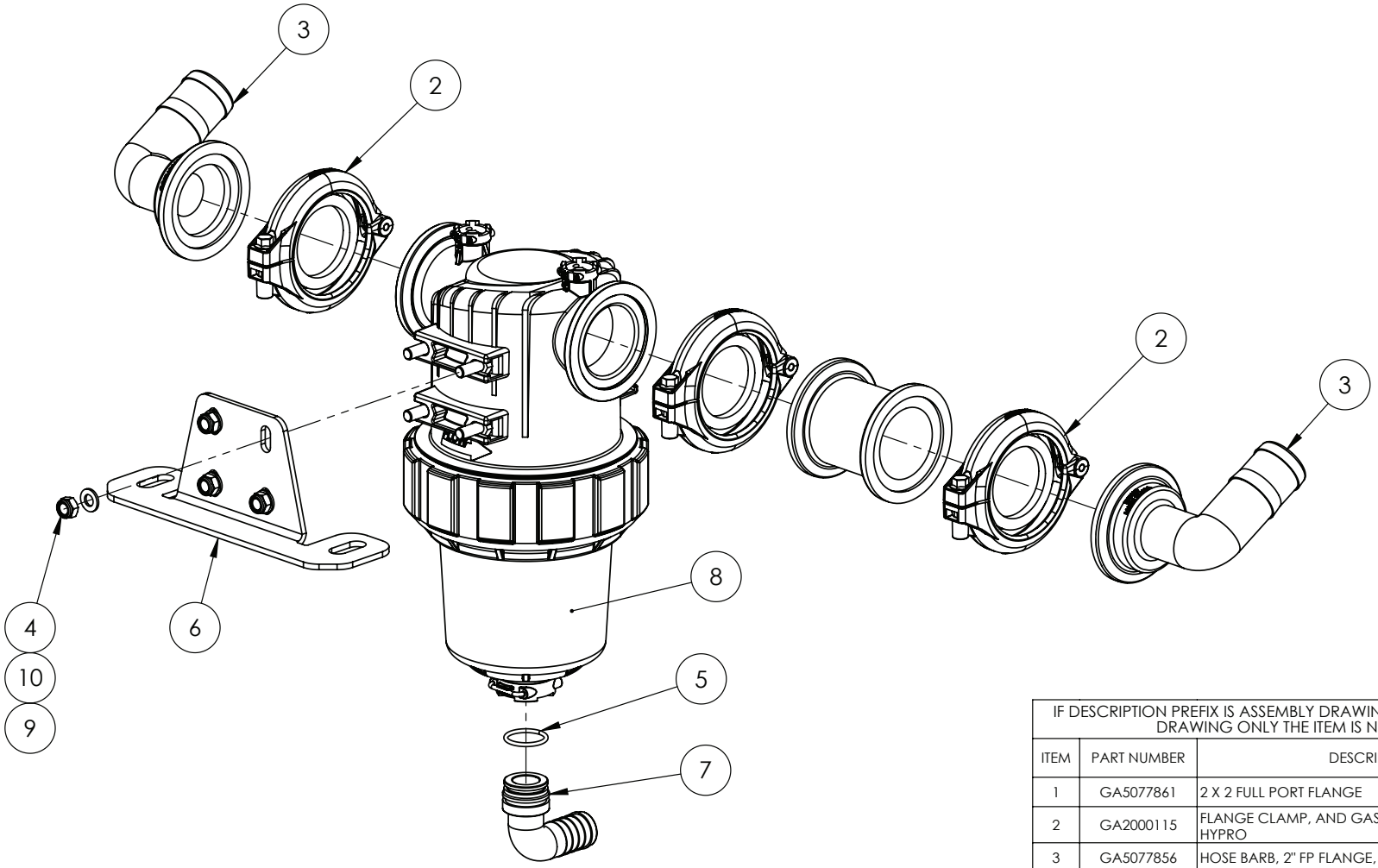

IF DESCRIPTION PREFIX IS ASSEMBLY DRAWING ONLY OR PRODUCTION DRAWING ONLY THE ITEM IS NOT FOR SALE			
ITEM	PART NUMBER	DESCRIPTION	QTY
1	GA5077861	2 X 2 FULL PORT FLANGE	1
2	GA2000115	FLANGE CLAMP, AND GASKET, 2", SERIES 220, HYPRO	3
3	GA5077856	HOSE BARB, 2" FP FLANGE, 1-1/2" HB, 90 DEGREE	2
4	GA5004917	NUT M8 NYLOC ZP	4
5	GA2000251	O-RING, BLANK CAP, SUIT PRESSURE FILTER GA2000563, ARAG, G11058V	1
6	GA4410350	PLATE, RH POD, PRESSURE FILTER MOUNT, PRAIRIE PRO, 2021	1
7	GA2000608	PLUMBING FITTING, HOSE BARB, ELBOW, 1", ARAG, 1191325	1
8	GA2000563	PRESSURE FILTER, 2", 100 MESH, ARAG SERIES 330	1
9	GA5004085	SET SCREW M8 X 20 GR8.8 ZP	4
10	GA5003643	WASHER M8 FLAT SS HD	4
GA4909492 GOLDACRES		PRODUCTION DRAWING ONLY, PRESSURE FILTER ASSEMBLY, CENTRIFUGAL PUMP, S3, SP	REV 01

Plumbing Lines & Hose Clamps, RH Pod, Hawkeye

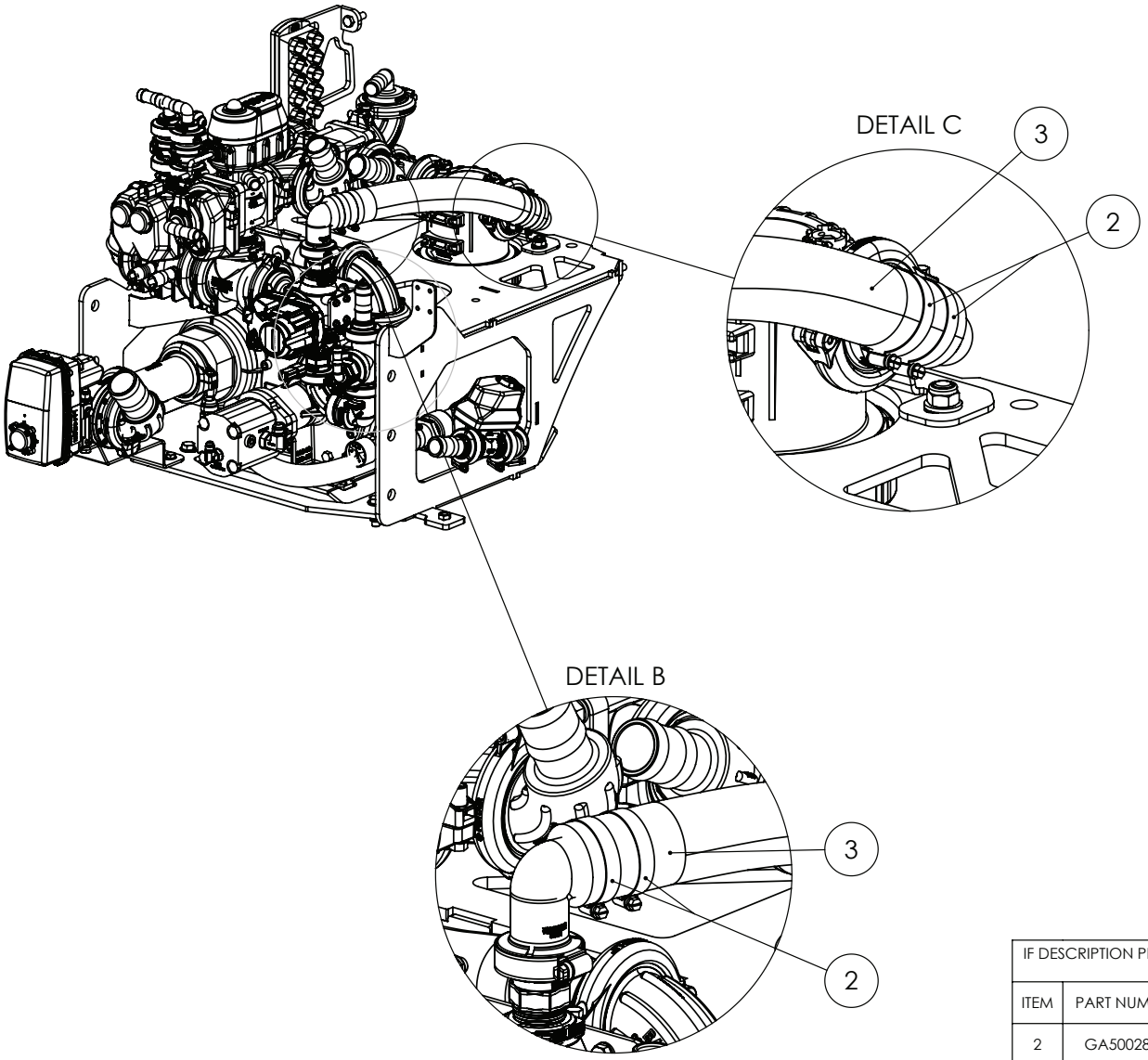

IF DESCRIPTION PREFIX IS ASSEMBLY DRAWING ONLY OR PRODUCTION DRAWING ONLY THE ITEM IS NOT FOR SALE			
ITEM	PART NUMBER	DESCRIPTION	QTY.
2	GA5002873	HOSE CLAMP, 1 1/2" SS (32-50/12W)	8
3	GA2000225	HOSE, PRESSURE, 1 1/2", HO38P	0.465
GA6101994-04 GOLDACRES		SPRAY PUMP POD, HAWKEYE, CONFIGURABLE, SP SERIES 3	REV 00

Plumbing Lines & Hose Clamps, RH Pod, Hawkeye

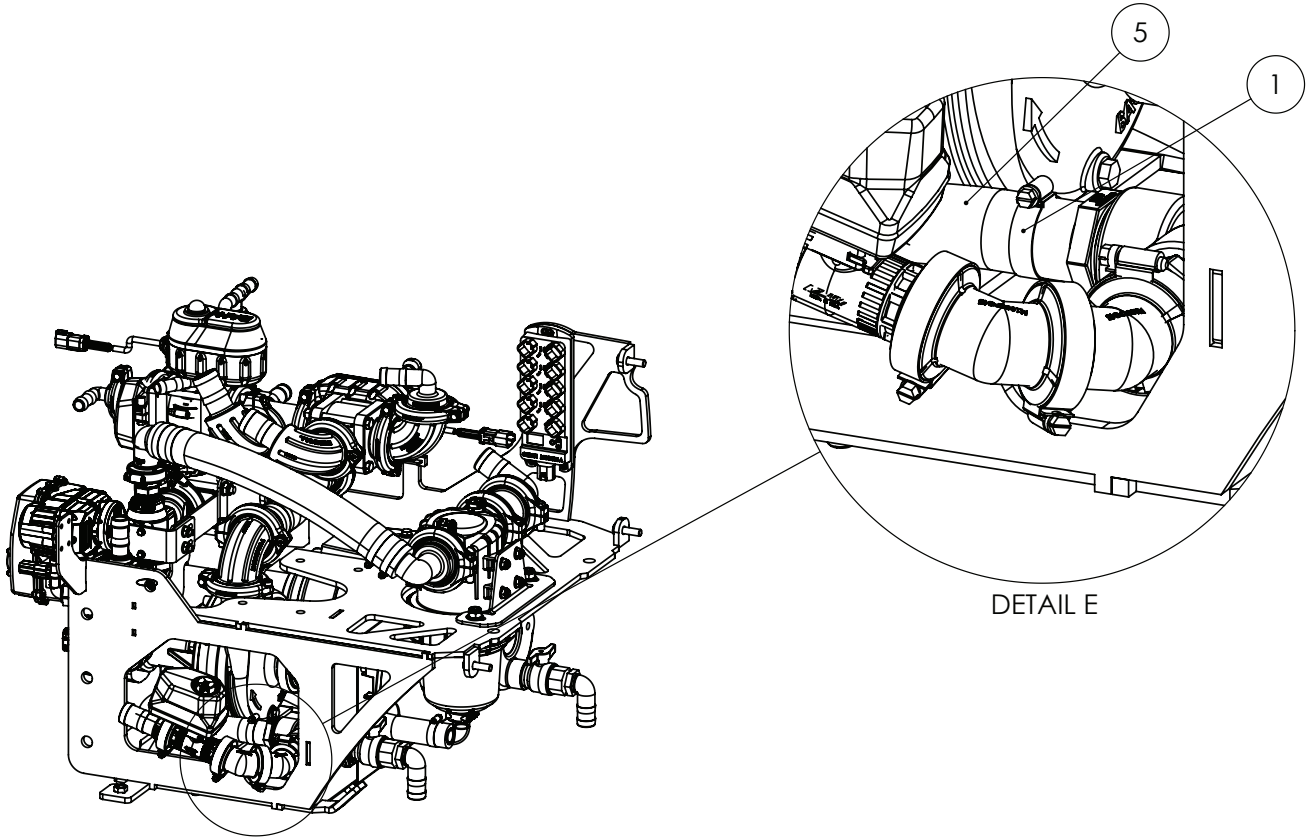

IF DESCRIPTION PREFIX IS ASSEMBLY DRAWING ONLY OR PRODUCTION DRAWING ONLY THE ITEM IS NOT FOR SALE			
ITEM	PART NUMBER	DESCRIPTION	QTY.
1	GA2000110	HOSE CLAMP, STAINLESS STEEL, 22mm-38mm	2
5	GA2000219	HOSE, PRESSURE, 1", HO25P	1
GA6101994-04 GOLDACRES		SPRAY PUMP POD, HAWKEYE, CONFIGURABLE, SP SERIES 3	REV 00

Plumbing Lines & Hose Clamps, RH Pod, Hawkeye

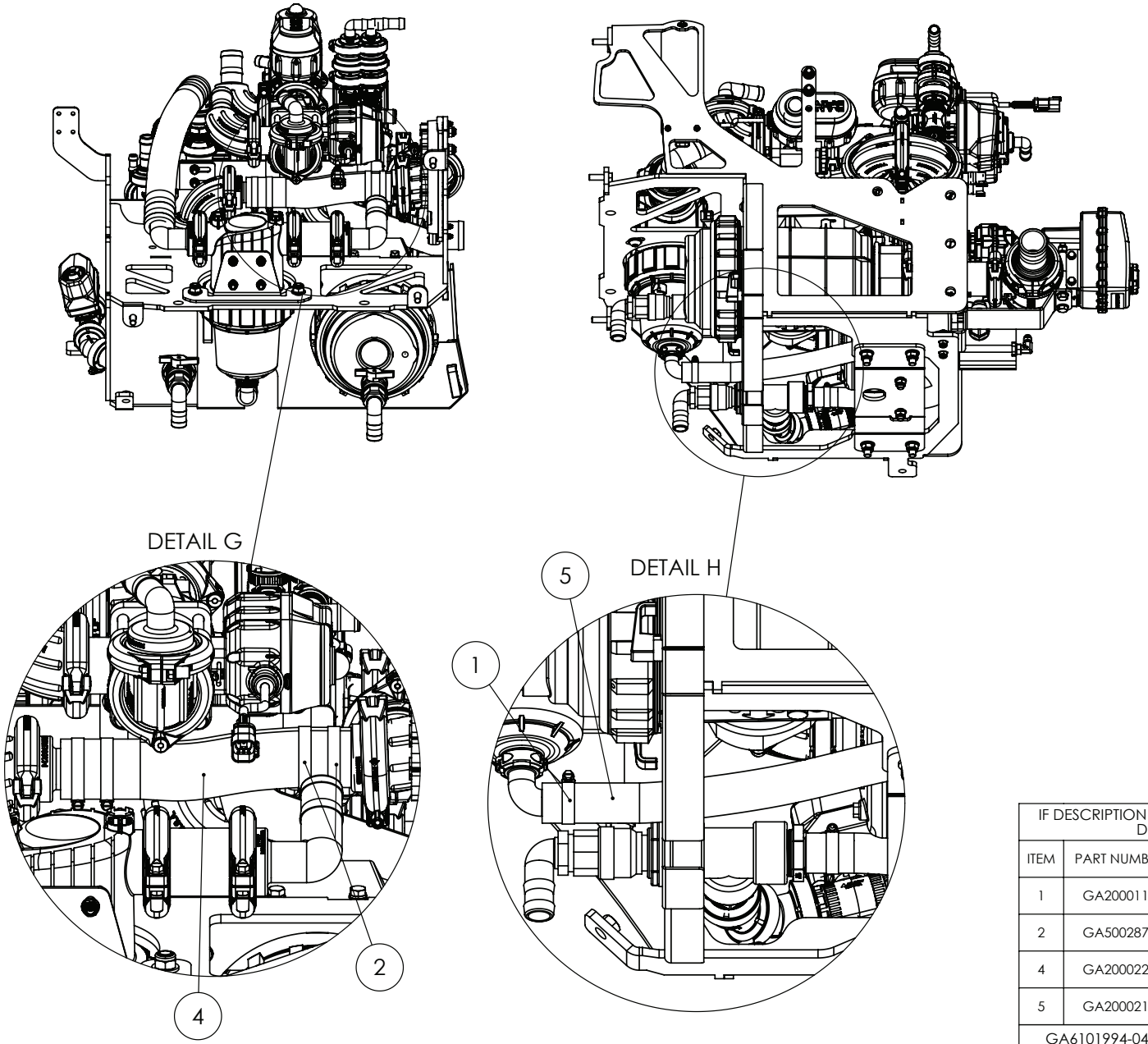

IF DESCRIPTION PREFIX IS ASSEMBLY DRAWING ONLY OR PRODUCTION DRAWING ONLY THE ITEM IS NOT FOR SALE			
ITEM	PART NUMBER	DESCRIPTION	QTY.
1	GA2000110	HOSE CLAMP, STAINLESS STEEL, 22mm-38mm	2
2	GA5002873	HOSE CLAMP, 1 1/2" SS (32-50/12W)	8
4	GA2000225	HOSE, PRESSURE, 1 1/2", HO38P	0.3
5	GA2000219	HOSE, PRESSURE, 1", HO25P	1
GA6101994-04 GOLDACRES		SPRAY PUMP POD, HAWKEYE, CONFIGURABLE, SP SERIES 3	REV 00

Module Harness Mount, RH Pod, Hawkeye

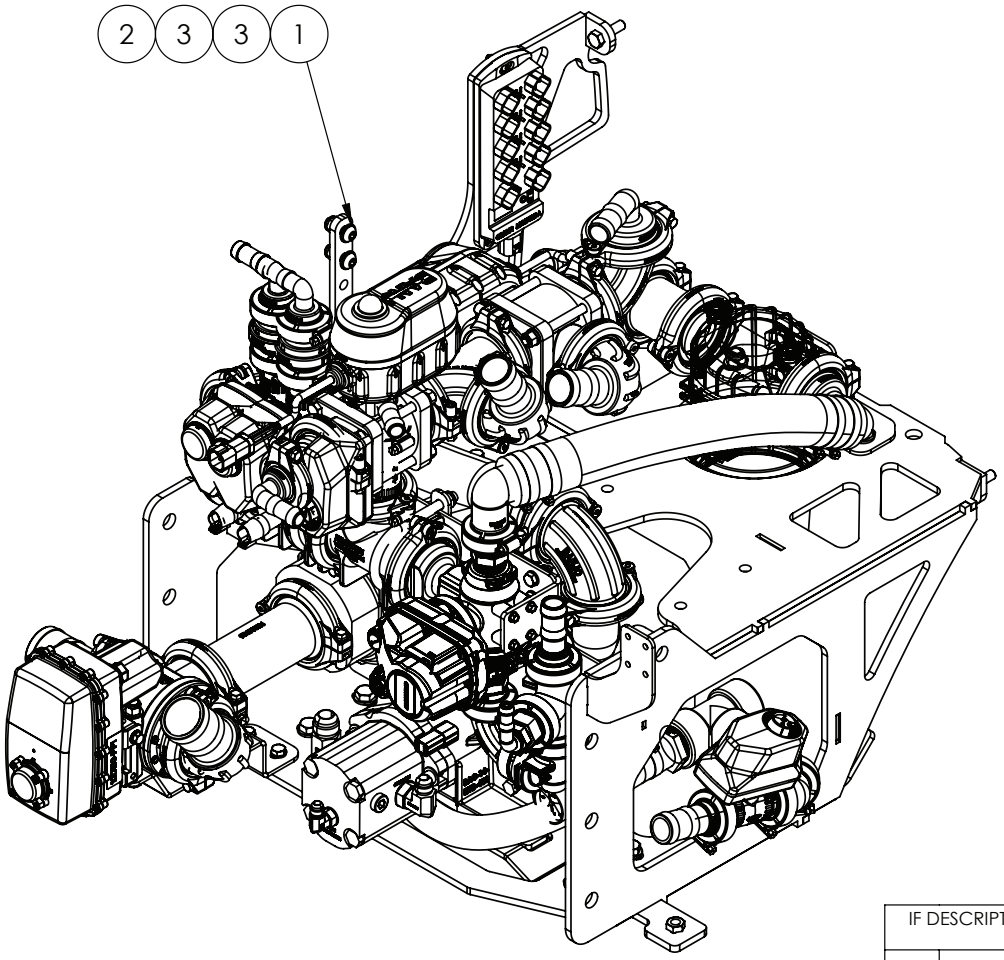

IF DESCRIPTION PREFIX IS ASSEMBLY DRAWING ONLY OR PRODUCTION DRAWING ONLY THE ITEM IS NOT FOR SALE			
ITEM	PART NUMBER	DESCRIPTION	QTY.
1	GA5048120	BHCS M10 X 30 SS A2-70	2
2	GA5000141	NUT M10 NYLOC ZP	2
3	GA5000117	WASHER M10 FLAT SS HD	4
GA6101994-04 GOLDACRES		SPRAY PUMP POD, HAWKEYE, CONFIGURABLE, SP SERIES 3	REV 00

Decals, Front View, RH Pod, Hawkeye

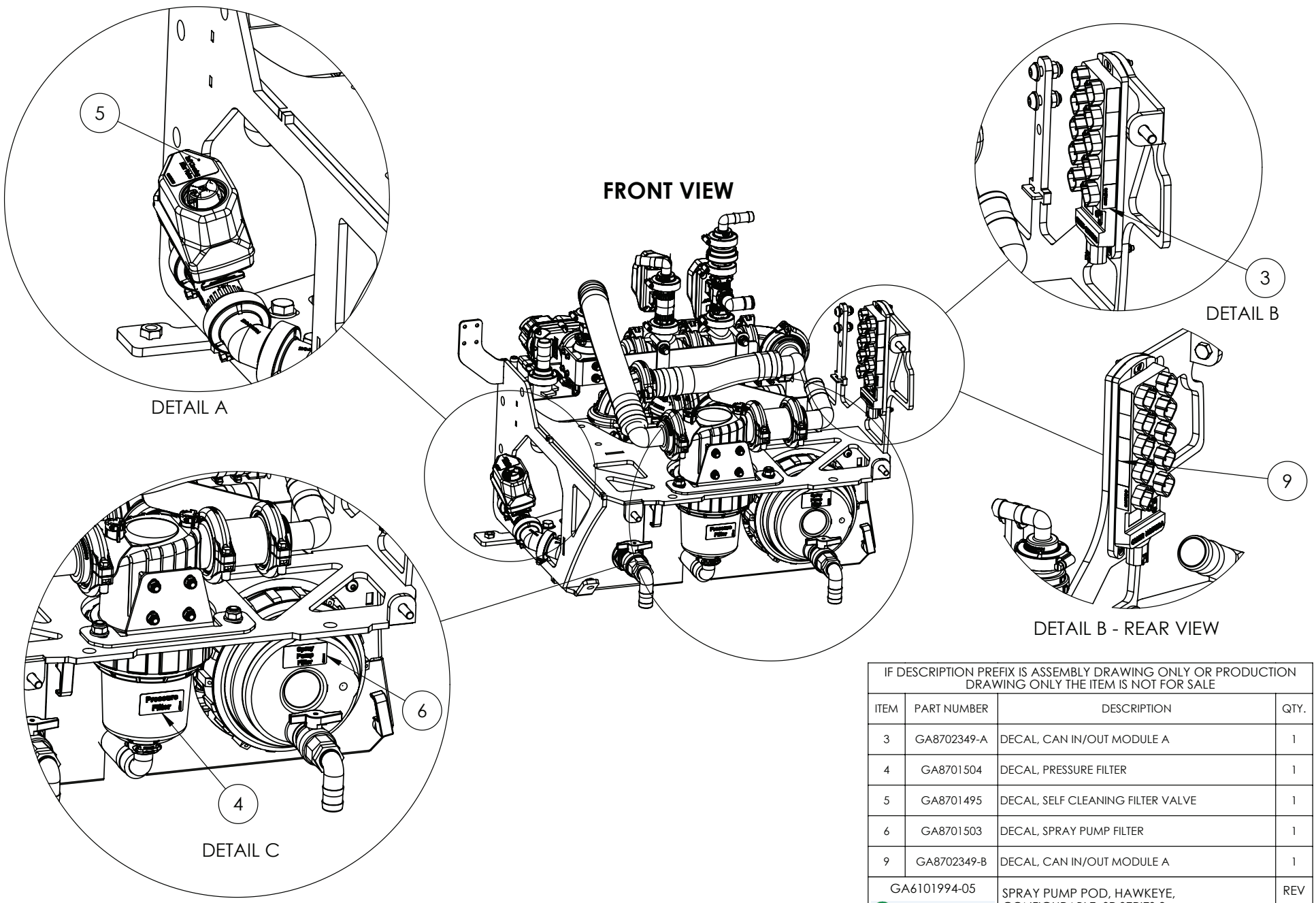

IF DESCRIPTION PREFIX IS ASSEMBLY DRAWING ONLY OR PRODUCTION DRAWING ONLY THE ITEM IS NOT FOR SALE			
ITEM	PART NUMBER	DESCRIPTION	QTY.
3	GA8702349-A	DECAL, CAN IN/OUT MODULE A	1
4	GA8701504	DECAL, PRESSURE FILTER	1
5	GA8701495	DECAL, SELF CLEANING FILTER VALVE	1
6	GA8701503	DECAL, SPRAY PUMP FILTER	1
9	GA8702349-B	DECAL, CAN IN/OUT MODULE A	1
GA6101994-05 GOLDACRES		SPRAY PUMP POD, HAWKEYE, CONFIGURABLE, SP SERIES 3	REV 00

Decals, Plumbing Standard, Plumbing Plus, No Front Mount, RH Pod

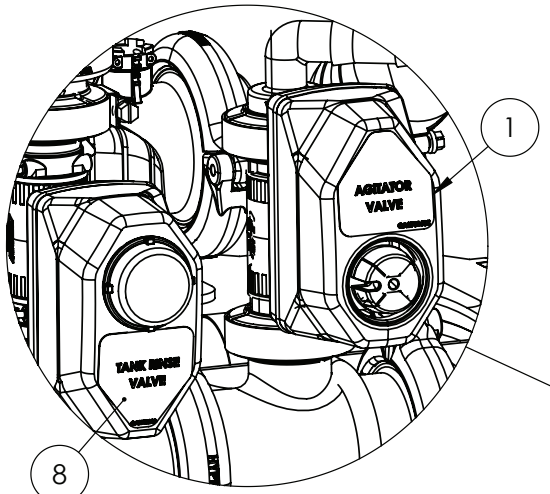

DETAIL D

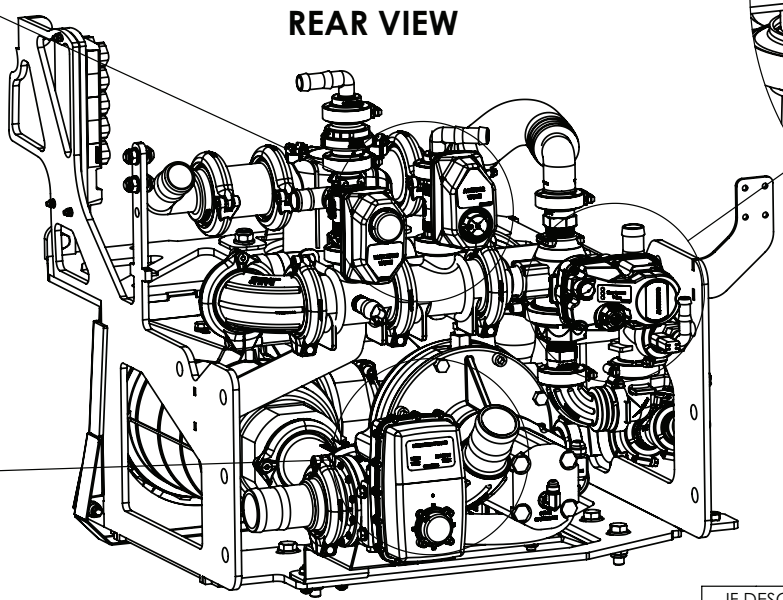

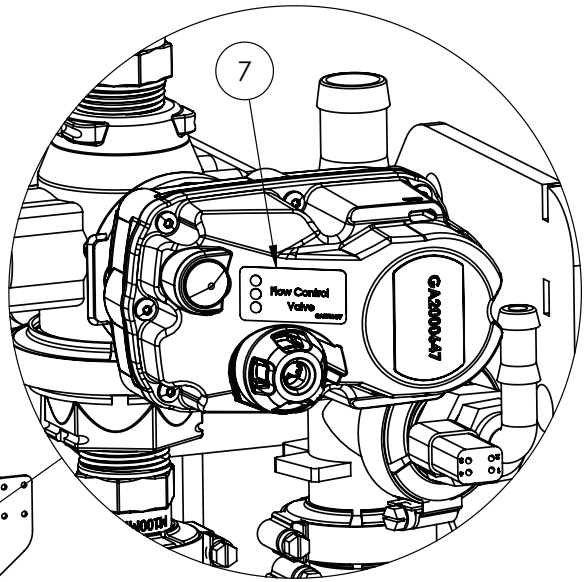

DETAIL E

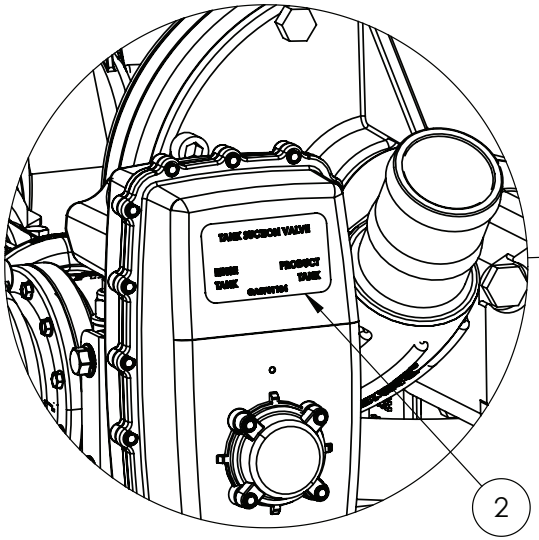

DETAIL F

BUILD OPTIONS:

FIT ITEMS (2) (7) (8)

IF 65215 - PLUMBING STANDARD

OR 65216 - PLUMBING PLUS FIT ITEM (1)

IF DESCRIPTION PREFIX IS ASSEMBLY DRAWING ONLY OR PRODUCTION DRAWING ONLY THE ITEM IS NOT FOR SALE			
ITEM	PART NUMBER	DESCRIPTION	QTY.
1	GA8701605	DECAL, AGITATOR VALVE	1
2	GA8701104	DECAL, TANK SUCTION VALVE	1
7	GA8702477	FLOW CONTROL EH9-3WAY-3SECOND - DECAL	1
8	GA8702399	TANK RINSE NOZZLES FROM FILL PUMP	1
9	GA8702349-B	DECAL, CAN IN/OUT MODULE A	1
GA6101994-05 GOLDACRES		SPRAY PUMP POD, HAWKEYE, CONFIGURABLE, SP SERIES 3	REV 00

Decals, Plumbing Standard, Plumbing Plus & Front Mount, RH Pod

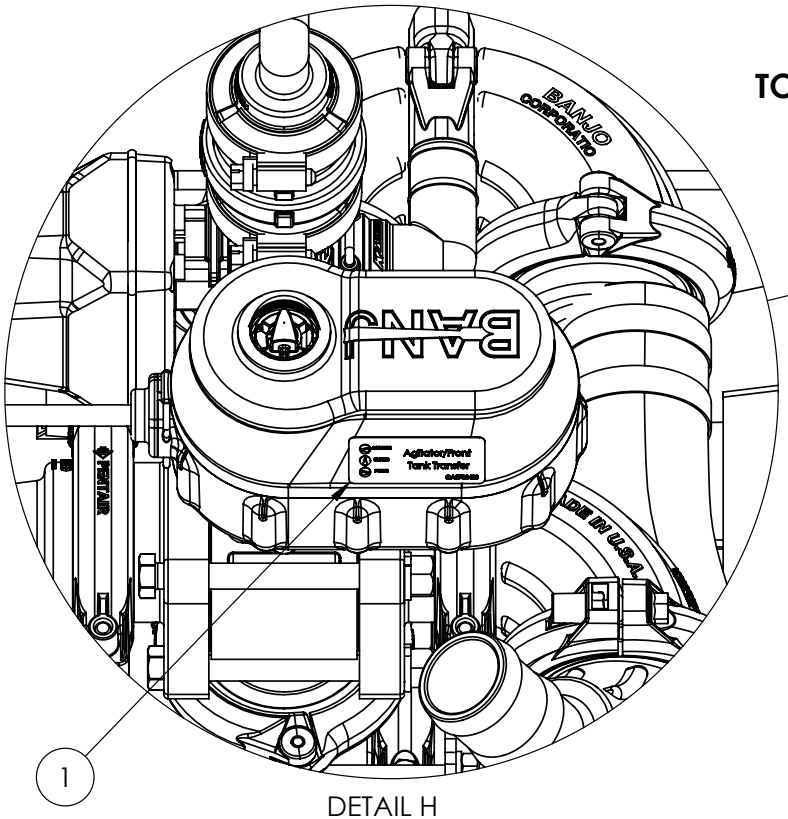

DETAIL H

TOP LEFT VIEW

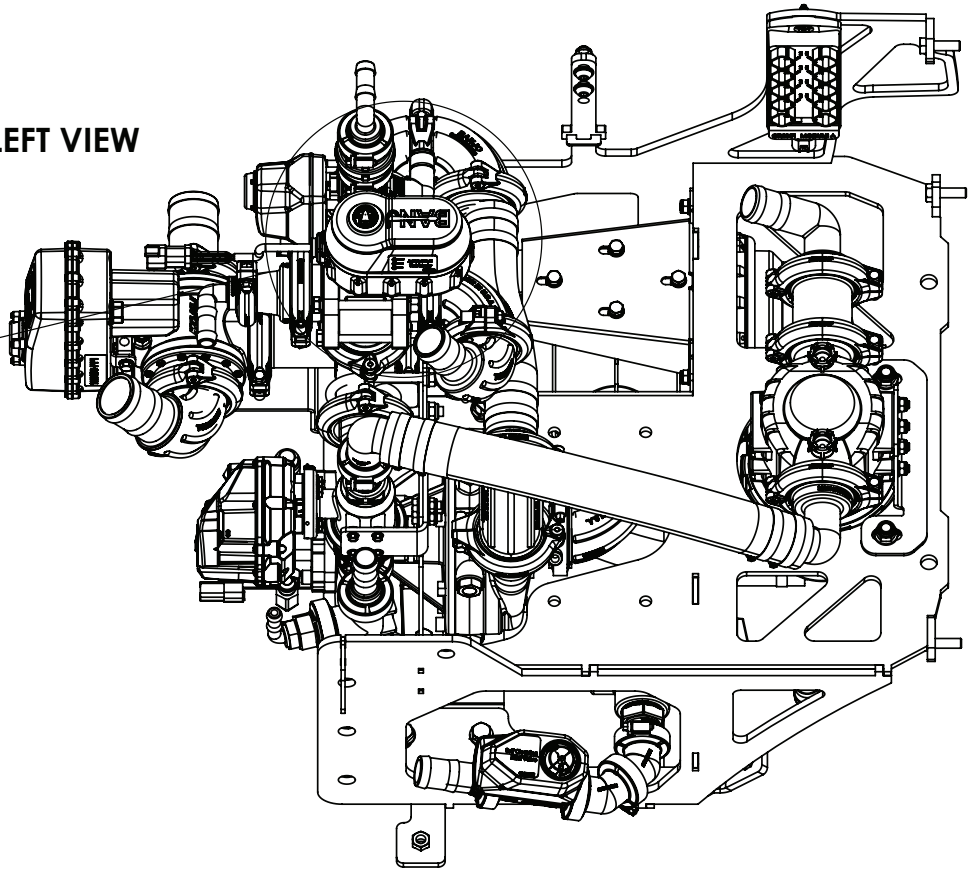

BUILD OPTIONS:
65215 - PLUMBING STANDARD
OR 65216 - PLUMBING PLUS
AND 80110 - 1500L FRONT MOUNT TANK

ADDITIONAL CAPACITY, FIT ITEM (1)

IF DESCRIPTION PREFIX IS ASSEMBLY DRAWING ONLY OR PRODUCTION DRAWING ONLY THE ITEM IS NOT FOR SALE			
ITEM	PART NUMBER	DESCRIPTION	QTY.
1	GA8702480	BANJO MEVX20BV DECAL	1
2	GA8702349-B	DECAL, CAN IN/OUT MODULE A	1
GA6101994-05 GOLDACRES		SPRAY PUMP POD, HAWKEYE, CONFIGURABLE, SP SERIES 3	REV 00

Decals, Dual Lines, RH Pod, Hawkeye

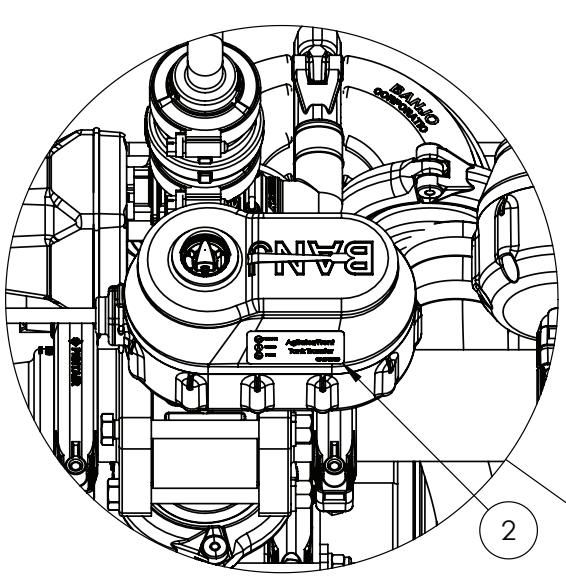

DETAIL I

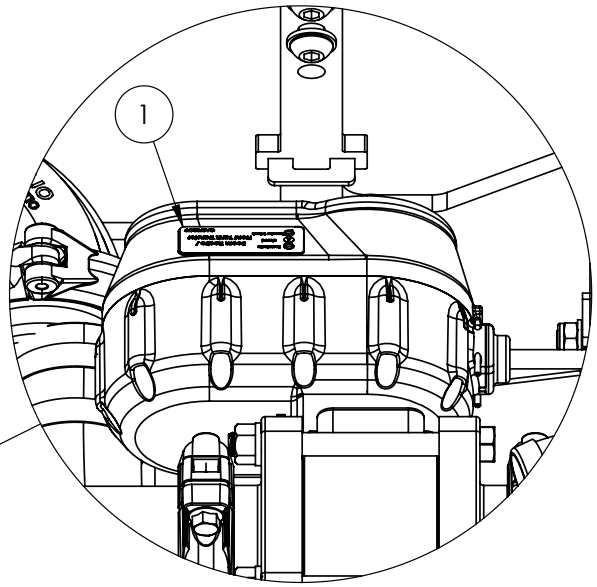

DETAIL J

TOP LEFT VIEW

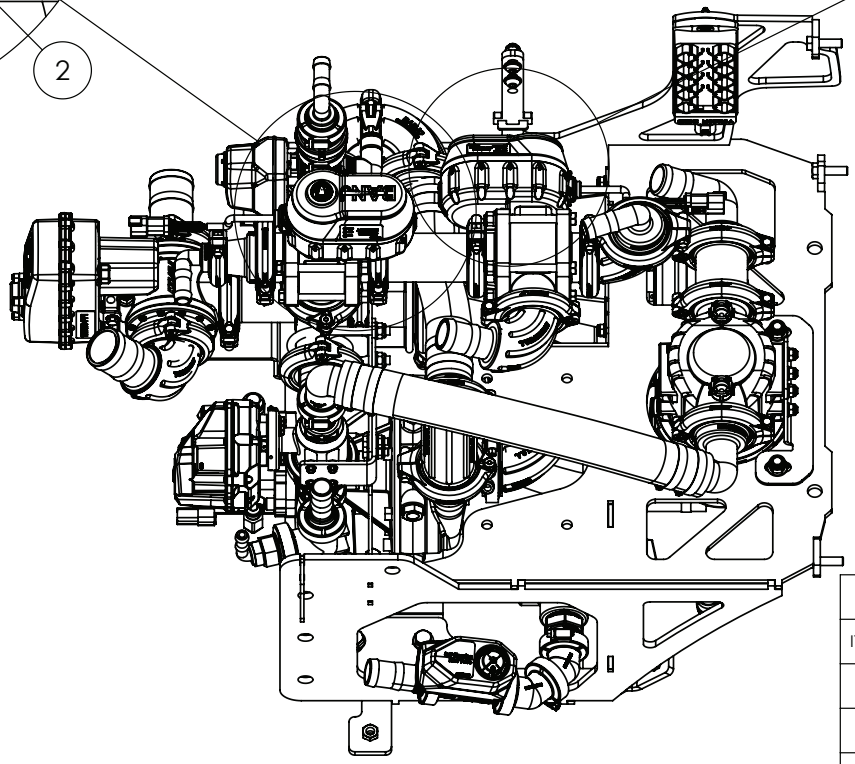

IF DESCRIPTION PREFIX IS ASSEMBLY DRAWING ONLY OR PRODUCTION DRAWING ONLY THE ITEM IS NOT FOR SALE			
ITEM	PART NUMBER	DESCRIPTION	QTY.
1	GA8702479	BANJO MEVX20BV DECAL - RAPIDFLOW	1
2	GA8702480	BANJO MEVX20BV DECAL	1
3	GA8702349-B	DECAL, CAN IN/OUT MODULE A	1
GA6101994-05 GOLDACRES		SPRAY PUMP POD, HAWKEYE, CONFIGURABLE, SP SERIES 3	REV 00

BUILD OPTION:

IF OPTION 65217 - PLUMBING DUAL LINES, FIT ITEMS (2) (1)

08 - Plumbing

Flow Meter Manifold Assembly

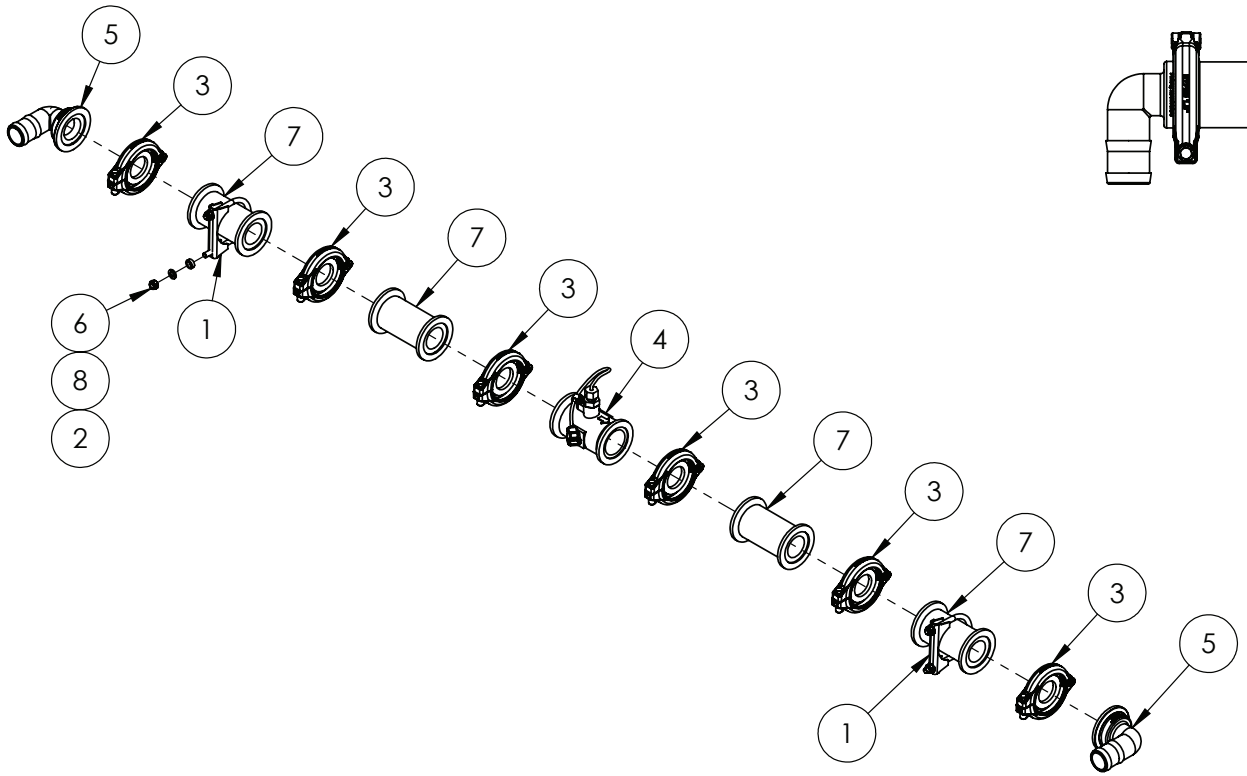

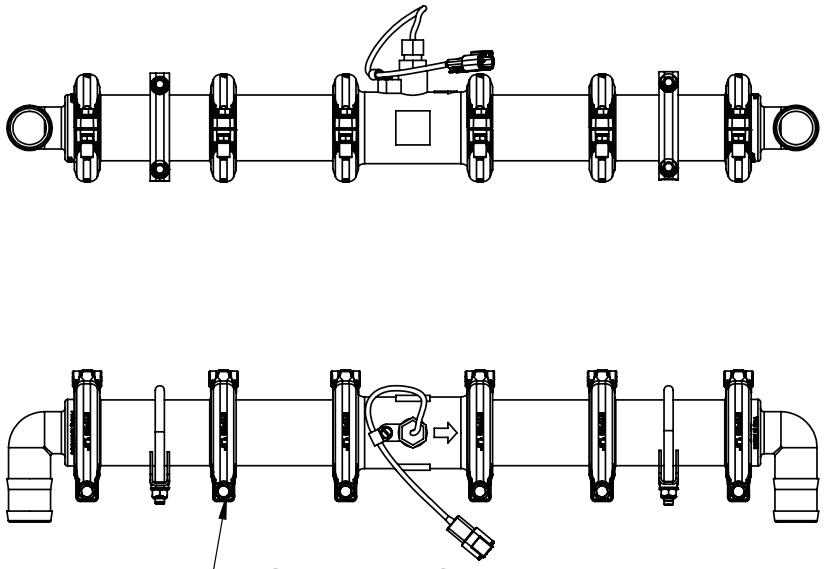

IF DESCRIPTION PREFIX IS ASSEMBLY DRAWING ONLY OR PRODUCTION DRAWING ONLY THE ITEM IS NOT FOR SALE			
ITEM	PART NUMBER	DESCRIPTION	QTY
1	GA5006689	CLAMP EXHAUST 2 5/8 (C12)	2
2	GA4552080	CRUSH TUBE, 10.2 ID X 15 OD X 5 mm LONG	4
3	GA2000114	FLANGE CLAMP, AND GASKET, 1.5", SERIES 200, HYPRO	6
4	GA3000265	FLOWMETER, RFM60P HIGH PULSE, DEUTSCH DTM, RAVEN, 0630172457	1
5	GA5077834	HOSE BARB, ELBOW, 90 DEGREE, 2" FLANGE X 1 1/2" HOSE, BANJO	2
6	GA5052590	NUT M8 NYLOC SS	4
7	GA5077840	PLUMBING COUPLING, STRAIGHT, 2" FLANGE X " FLANGE X 4 1/2" LONG, BANJO	4
8	GA5003643	WASHER 8mm FLAT SS HD	4
GA4949215 GOLDACRES		FLOW METER ASSEMBLY, LONG, RAVEN 60P HIGH PULSE WITH DEUTSCH CONNECTOR, 1 1/2" HOSE BARBS, SUIT RCM ISO BUS	REV 02

Flow Meter Assembly

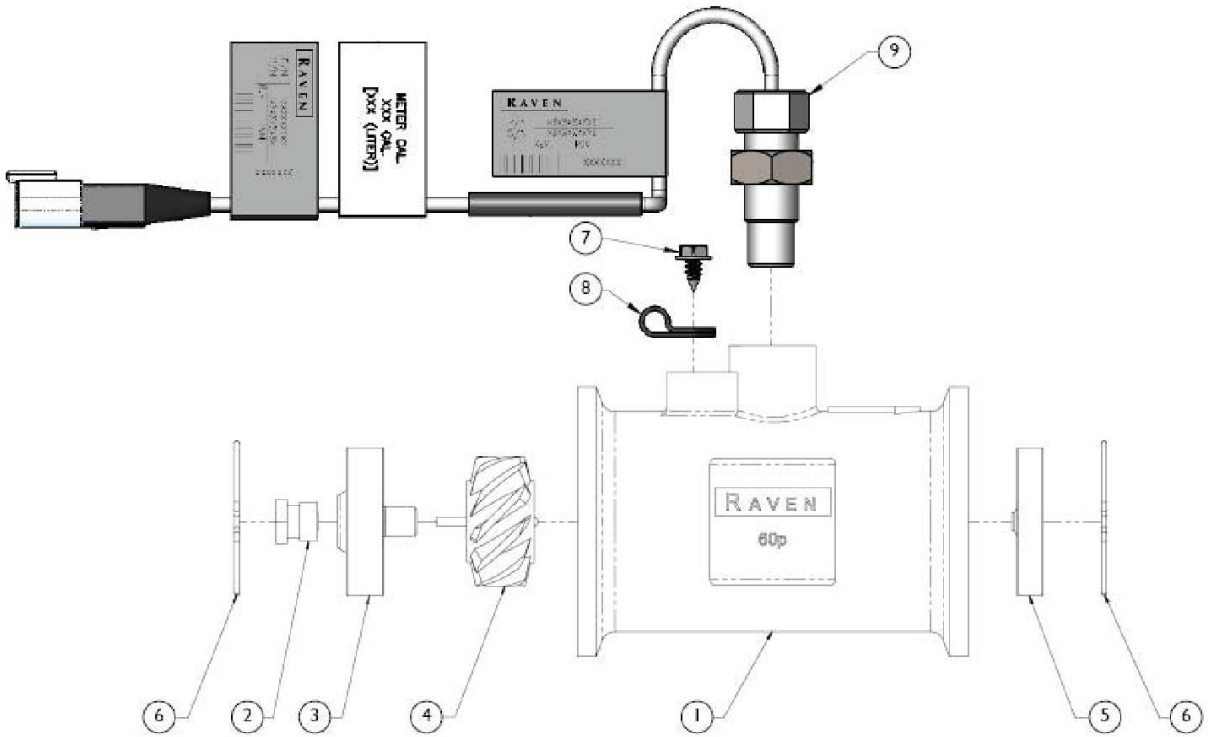

IF DESCRIPTION PREFIX IS ASSEMBLY DRAWING ONLY OR PRODUCTION DRAWING ONLY THE ITEM IS NOT FOR SALE			
ITEM	PART NUMBER	DESCRIPTION	QTY
1	GA5075890	FLOWMETER, RFM60P HIGH PULSE, RAVEN,	1
2	GA5026132	TURBINE, STUD, POLY, FLOWMETER, RFM-60	2
3	GA5075870	HUB/BEARING ASY UPSTREAM RFM60	1
4	GA5075869	ROTOR/MAGNET ASY RFM-60S	1
5	GA5075871	BEARING, DOWN STREAM END BEARING SUIT RFM60S FLOW METER, RAVEN, 0630171769	1
6	GA5026133	RETAINING RING, WIREFORM, FLOWMETER, RAVEN RFM-60	2
7	GA5076734	SCW 10-16 X 3/8 SLTD HEX	1
8	GA5076966	CLAMP CABLE PLASTIC 1/4X1/2	1
9	GA3000399	SENSOR, EXTERNAL FLOW METER, HIGH PULSE, SUIT 15P AND 60P, DEUTSCH CONNECTOR, RAVEN, 10630172458B	1
GA5075890 GOLDACRES		FLOW METER, RFM60P HIGH PULSE, RAVEN	REV 00

Chemical Suction Probe

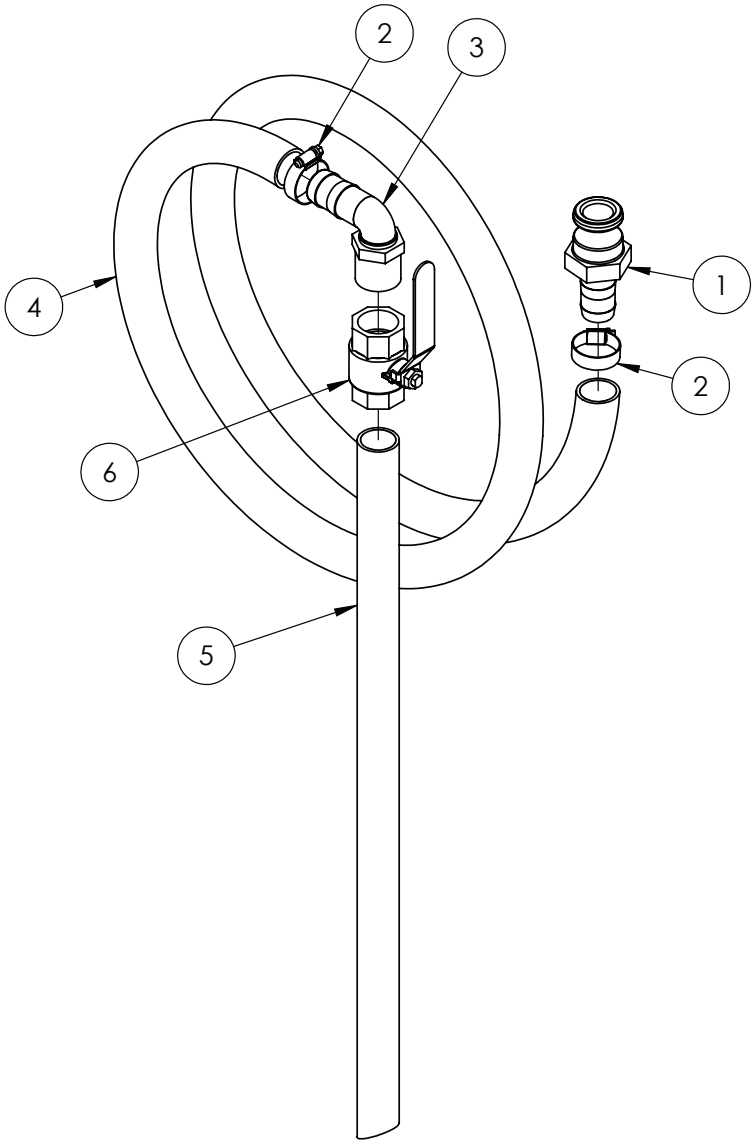

IF DESCRIPTION PREFIX IS ASSEMBLY DRAWING ONLY OR PRODUCTION DRAWING ONLY THE ITEM IS NOT FOR SALE			
ITEM	PART NUMBER	DESCRIPTION	QTY
1	GA5076011	CAM LEVER, 1 MALE COUPLING X 1 HOSE BARB, BANJO	1
2	GA5001681	HOSE CLAMP, 1" SS (20-32/12W)	2
3	GA5077723	HOSE BARB, ELBOW, 90 DEGREE, 1" MALE X 1" HOSE, BANJO	1
4	GA2000220	PVC HOSE 25mm CUT 3.2M	1
5	GA5013603	POLY PIPE 25mm CUT 630mm	1
6	GA5018319	VALVE, BALL, 25mm, 1" FEMALE, LEVER HANDLE, BRASS	1
GA4948250 GOLDACRES		PRE ASSEMBLED CHEMICAL DRUM PROBE	REV 01

Micromatic Probe Assembly

REPLACEMENT PARTS			
ITEM	PART NUMBER	DESCRIPTION	QTY
A	GA5018799	SEAL KIT, SUIT MICROMATIC / ENVIRO DRUM COUPLING	-

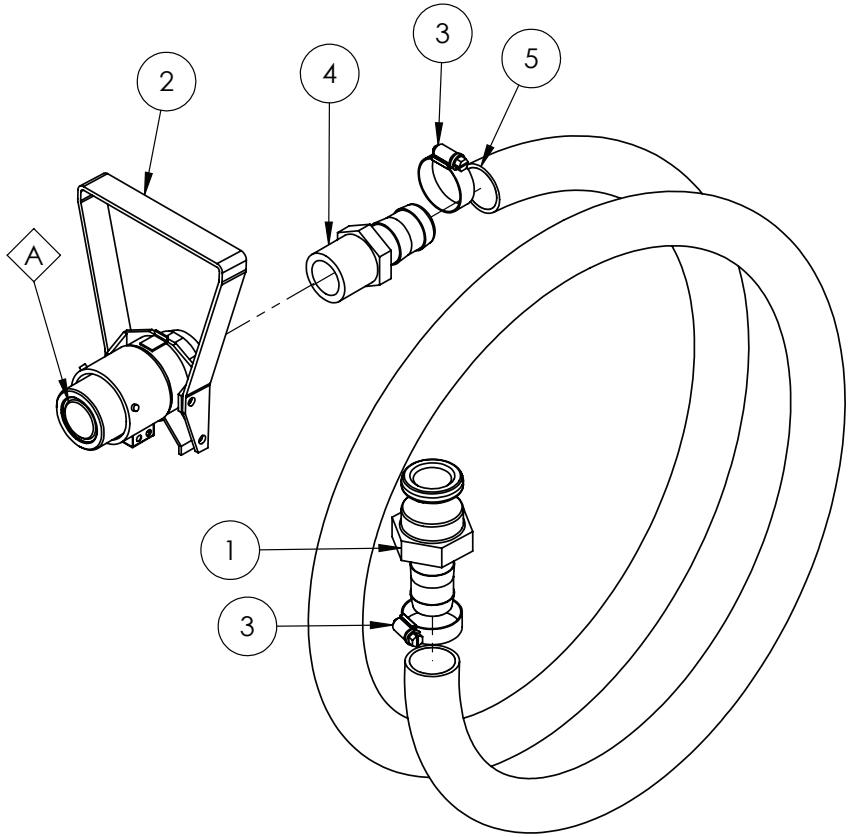

IF DESCRIPTION PREFIX IS ASSEMBLY DRAWING ONLY OR PRODUCTION DRAWING ONLY THE ITEM IS NOT FOR SALE			
ITEM	PART NUMBER	DESCRIPTION	QTY
1	GA5076011	CAM LEVER, 1 MALE COUPLING X 1 HOSE BARB, BANJO	1
2	GA5018803	COUPLER, 3 PIN, VITON FLOW CONTROL	1
3	GA5001681	HOSE CLAMP, 1" SS (20-32/12W)	2
4	GA5077718	HOSE BARB, STRAIGHT, 1 MALE THREAD X 1 HOSE, BANJO	1
5	GA2000220	PVC HOSE 25mm CUT 2840M	1
GA5020600 GOLDACRES		CHEMICAL SUCTION PROBE WITH ENVIRO	REV

Arag, 319 Series, Suction Filter

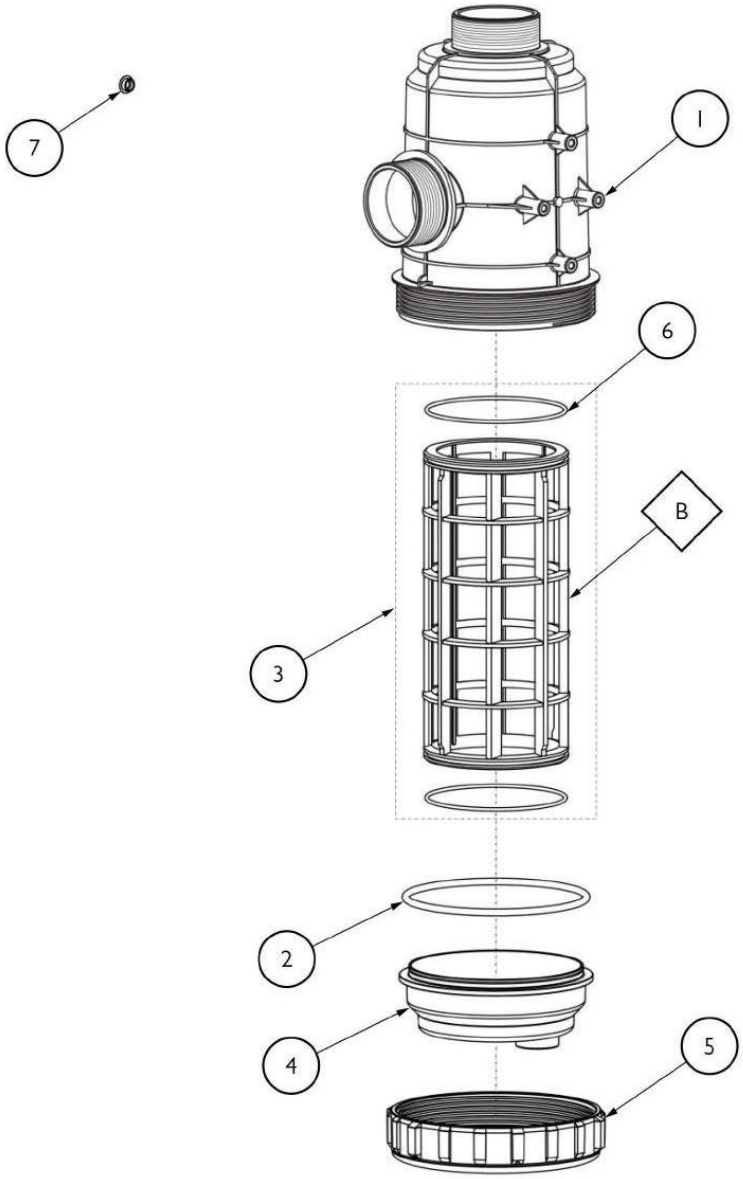

OPTIONAL PARTS			
ITEM	PART NUMBER	DESCRIPTION	QTY
A	GA4524994	SPANNER, ZINC COATED, 3" SUCTION FILTER, ARAG 319092 GA2000101	-
B	GA2000281	FILTER SCREEN, 145 X 320mm, 120 / 32 MESH, SUIT 319 3" FILTER, "GREY", ARAG	-

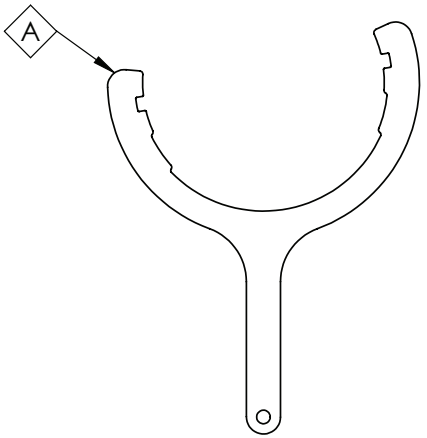

* ASSEMBLY DRAWING ONLY			
ITEM	PART NUMBER	DESCRIPTION	QTY
1	GA2000289	SUCTION FILTER BODY, SUIT ARAG 319, 319090.010	1
2	GA2000290	O RING, 6.99 X 174.6, EPDM, G11052, SUIT ARAG 319	1
	GA2000587	O-RING, 6.99 X 174.6, VITON, G11052V, SUIT ARAG GA2000101	1
3	GA2000561	FILTER SCREEN, 145 X 320mm, 32 MESH, SUIT 319 3" FILTER, "RED", ARAG	1
4	GA2000291	319 SUCTION FILTER BOWL, 319090.020	1
5	GA2000292	FLY NUT, SUCTION FILTER BODY, SUIT ARAG 319, 319090.040	1
6	GA5076863	O RING, 136.10 X 3.53, 335000.060	2
	GA5026296	O RING, 136.10 X 3.53, VITON, 335000.060V	2
7	GA2000293	LEVER PLUG, RED, SUIT ARAG 319, 4542233.055	1
GA2000101 GOLDACRES		SUCTION FILTER, 3" 32 MESH, 3" BSP MALE THREADS, VITON ORING, ARAG	REV 00.B

Arag, 330 Series, Pressure Filter

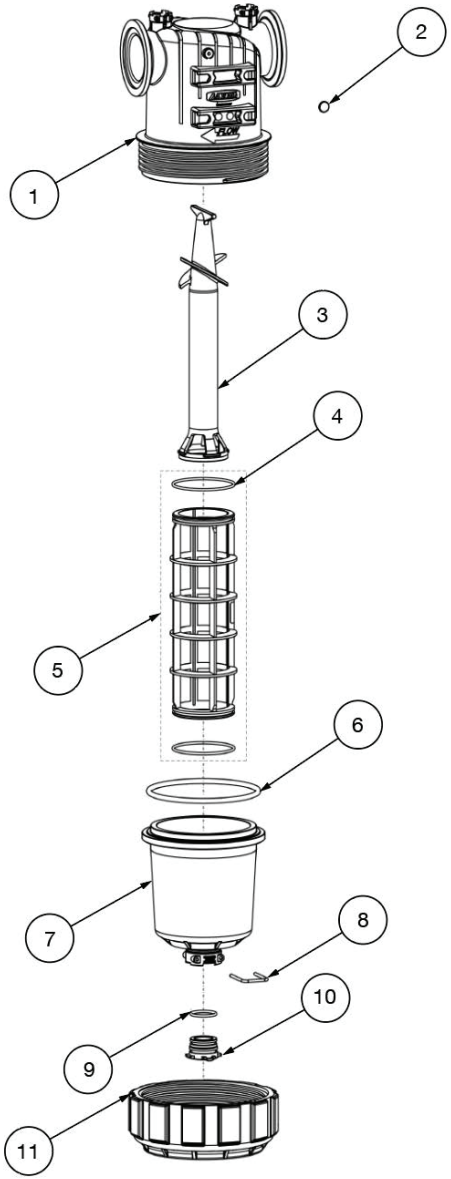

OPTIONAL PARTS			
ITEM	PART NUMBER	DESCRIPTION	QTY
A	GA4525000	SPANNER, ZINC COATED, 2" PRESSURE FILTER, ARAG 3303172V GA2000563	-

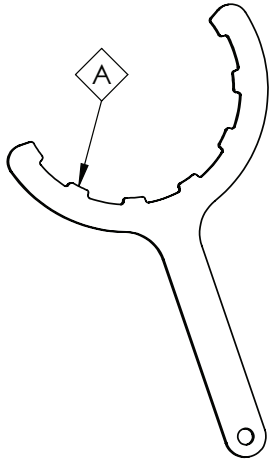

IF DESCRIPTION PREFIX IS ASSEMBLY DRAWING ONLY OR PRODUCTION DRAWING ONLY THE ITEM IS NOT FOR SALE			
ITEM	PART NUMBER	DESCRIPTION	QTY
1	GA2000246	BODY, SUIT PRESSURE FILTER GA2000563, ARAG, 3303070.010	1
2	GA5078771	YELLOW CAP, ARAG, PRESSURE FILTER, 80MM, 31020035.012	1
3	GA2000247	SELF-CLEANING CYLINDER, SUIT PRESSURE FILTER GA2000563, ARAG, 330000.050	1
4	GA2000248	O-RING, FILTER ELEMENT, SUIT PRESSURE FILTER GA2000563, ARAG, 462200.040V	1
5	GA2000347	FILTER ELEMENT, SUIT GA2000563 PRESSURE FILTER, YELLOW, 80 MESH, VITON O RINGS, ARAG	1
6	GA2000249	O-RING, BOWL, SUIT PRESSURE FILTER GA2000563, ARAG, G11100V	1
7	GA2000250	BOWL, SUIT PRESSURE FILTER GA2000563, ARAG, 3300100.020	1
8	GA2000252	FORK D.3, DIST.29, SUIT PRESSURE FILTER GA2000563, ARAG, 010003	1
9	GA2000251	O-RING, BLANK CAP, SUIT PRESSURE FILTER GA2000563, ARAG, G11058V	1
10	GA2000342	PRESSURE FILTER BOWL CAP, ARAG 330, 219130	1
11	GA2000253	LOCK RING, SUIT PRESSURE FILTER GA2000563, ARAG, 330000.040	1
GA2000563 GOLDACRES		PRESSURE FILTER, 2", 80 MESH, ARAG SERIES 330	REV 00

Fenceline Nozzle Body Assembly, LH, Manual Operated, 1”

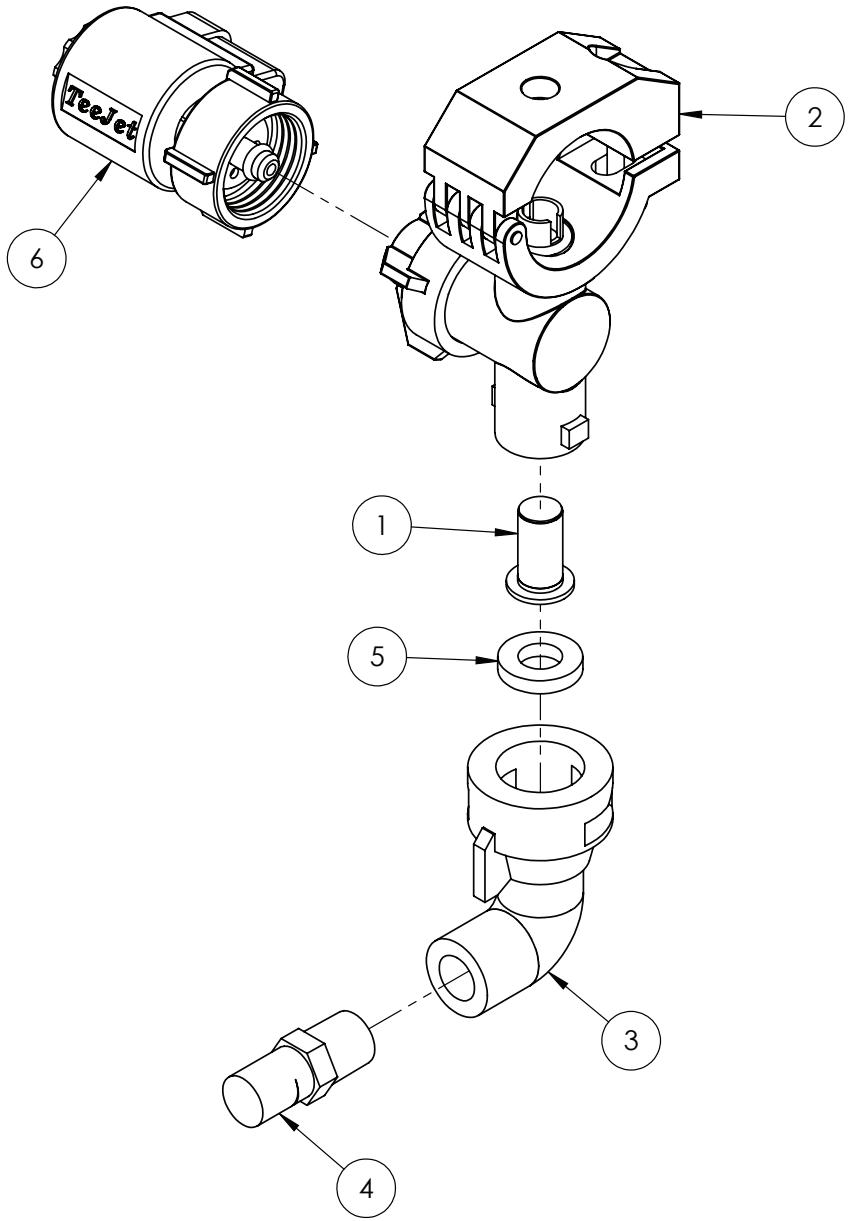

IF DESCRIPTION PREFIX IS ASSEMBLY DRAWING ONLY OR PRODUCTION DRAWING ONLY THE ITEM IS NOT FOR SALE			
ITEM	PART NUMBER	DESCRIPTION	QTY
1	GA5077159	FILTER, NOZZLE TIP, RED, 50 MESH, POLYPROPYLENE & SS, TEEJET, 8079-PP-50	1
2	GA5077962	NOZZLE BODY, SINGLE, 1", TEEJET, QJ17560A-1-NYB	1
3	GA5077986	NOZZLE CAP & WASHER, 90 DEGREE CAP, 1/4" NPT FEMALE OUTLET, TEEJET, QJ4676-90-1/4-NYR	1
4	GA8100339	NOZZLE, FENCE LINE, ORANGE, POLYMER, LEFT SIDE, 1/4" NPT, TEEJET, 1/4XP10L	1
5	GA5055245	SEAT WASHER, RUBBER SUIT TEE JET NOZZLE	1
6	GA5071785	SOLENOID, E-CHEMSAVER SUIT 2 PIN METRI-PACK, FENCE LINE	1
GA4950015 GOLDACRES		ASSEMBLY DRAWING ONLY, FENCE LINE JET ASSEMBLY, LH, 1", TRITECH S	REV 00

Fenceline Nozzle Body Assembly, RH, Manual Operated, 1”

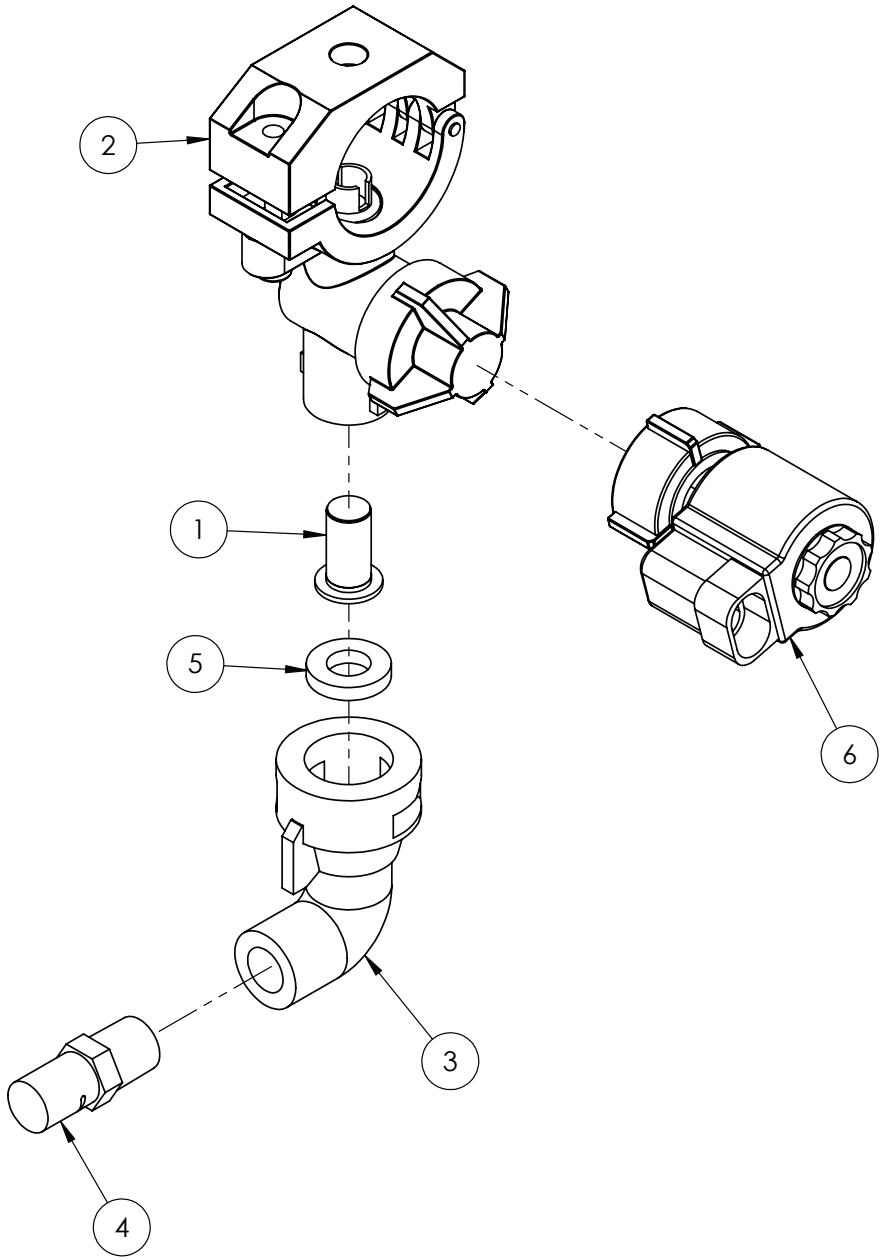

IF DESCRIPTION PREFIX IS ASSEMBLY DRAWING ONLY OR PRODUCTION DRAWING ONLY THE ITEM IS NOT FOR SALE			
ITEM	PART NUMBER	DESCRIPTION	QTY
1	GA5077159	FILTER, NOZZLE TIP, RED, 50 MESH, POLYPROPYLENE & SS, TEEJET, 8079-PP-50	1
2	GA5077962	NOZZLE BODY, SINGLE, 1", TEEJET, QJ17560A-1-NYB	1
3	GA5077986	NOZZLE CAP & WASHER, 90 DEGREE CAP, 1/4" NPT FEMALE OUTLET, TEEJET, QJ4676-90-1/4-NYR	1
4	GA8100340	NOZZLE, FENCE LINE, ORANGE, POLYMER, RIGHT SIDE, 1/4" NPT, TEEJET, 1/4XP10R	1
5	GA5055245	SEAT WASHER, RUBBER SUIT TEE JET NOZZLE	1
6	GA5071785	SOLENOID, E-CHEMSAVER SUIT 2 PIN METRI-PACK, FENCE LINE	1
GA4950020 GOLDACRES		ASSEMBLY DRAWING ONLY, FENCE LINE JET ASSEMBLY, RH, 1", TRITECH S	REV 00

Nozzle Body, 1”, Teejet Single Body

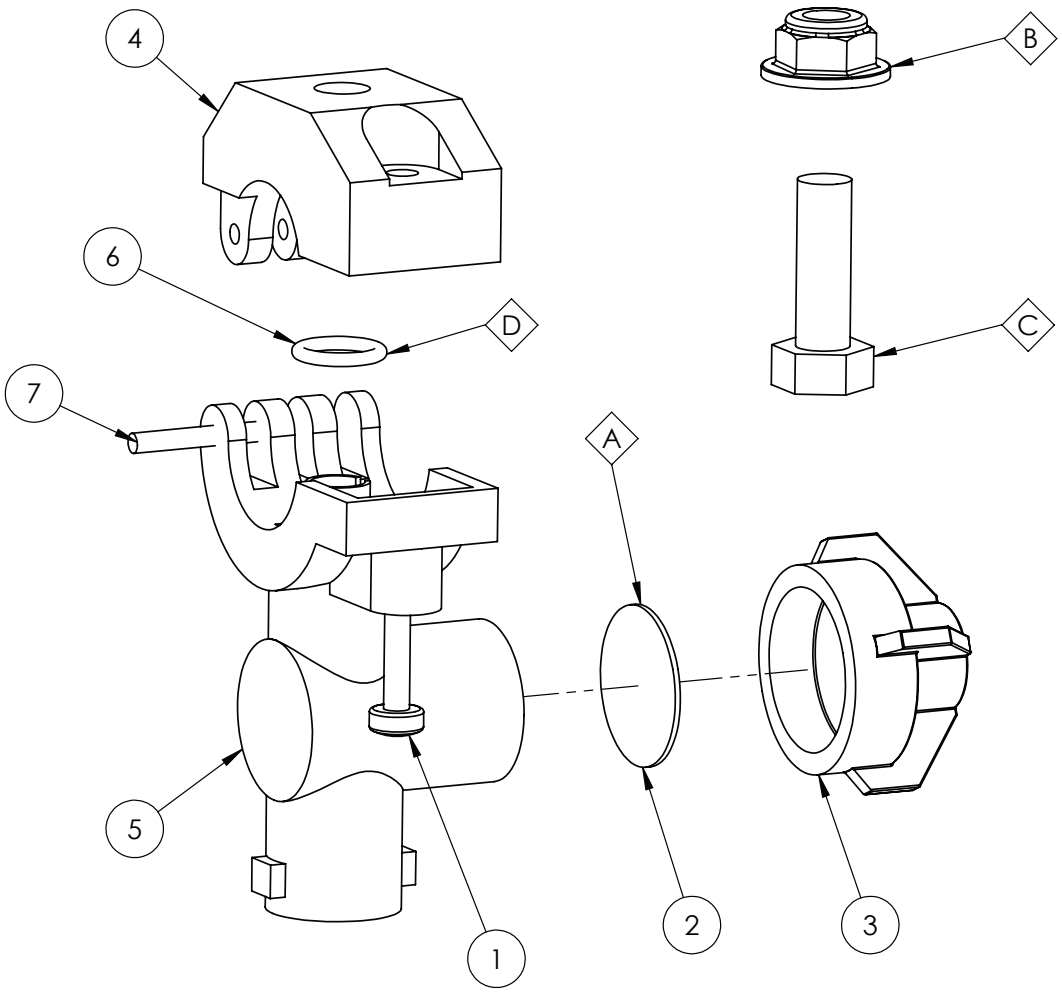

REPLACEMENT PARTS			
ITEM	PART NUMBER	DESCRIPTION	QTY
A	GA5077440	DIAPHRAGM, VITON, NOZZLE BODY CHECK VALVE, TEEJET	-
B	GA5070710	NUT FLANGE PLASTIC M8 X 1.25	1
C	GA5052595	BOLT M8 X 20 SS A270	1
D	GA5077596	O RING, 14.5 X 2.5, BUNA, CP7717-2/110-BU, SUITS QJ7421 SERIES NOZZLE BODIES.	1

IF DESCRIPTION PREFIX IS ASSEMBLY DRAWING ONLY OR PRODUCTION DRAWING ONLY THE ITEM IS NOT FOR SALE			
ITEM	PART NUMBER	DESCRIPTION	QTY
1	GA5049020	BOLT PAN HEAD M4 X 25 SS	1
2	GA5077439	CHEMSAVER, DIAPHRAGM, CP21953-EPR, TEEJET	1
3	GA5076670	CHEMSAVER, 10PSI, BLACK, TEEJET, 21950-10-NYB	1
4	GA5077533	NOZZLE BODY CLAMP, UPPER, 1, TEEJET, CP48222-NYB	1
5	GA5077962	NOZZLE BODY, SINGLE, 1, TEEJET, QJ17560A-1-NYB	1
6	GA5077596	O RING, 14.5 X 2.5, BUNA, CP7717-2/110-BU, SUITS QJ7421 SERIES NOZZLE BODIES.	1
7	GA5077537	PIN, NOZZLE BODY CLAMP, TEEJET, CP48256-SS	1
GA5077962 GOLDACRES		NOZZLE BODY, SINGLE, 1, TEEJET, QJ17560A-1-NYB	REV 00

Nozzle Body Assembly - Teejet Clock Face Body

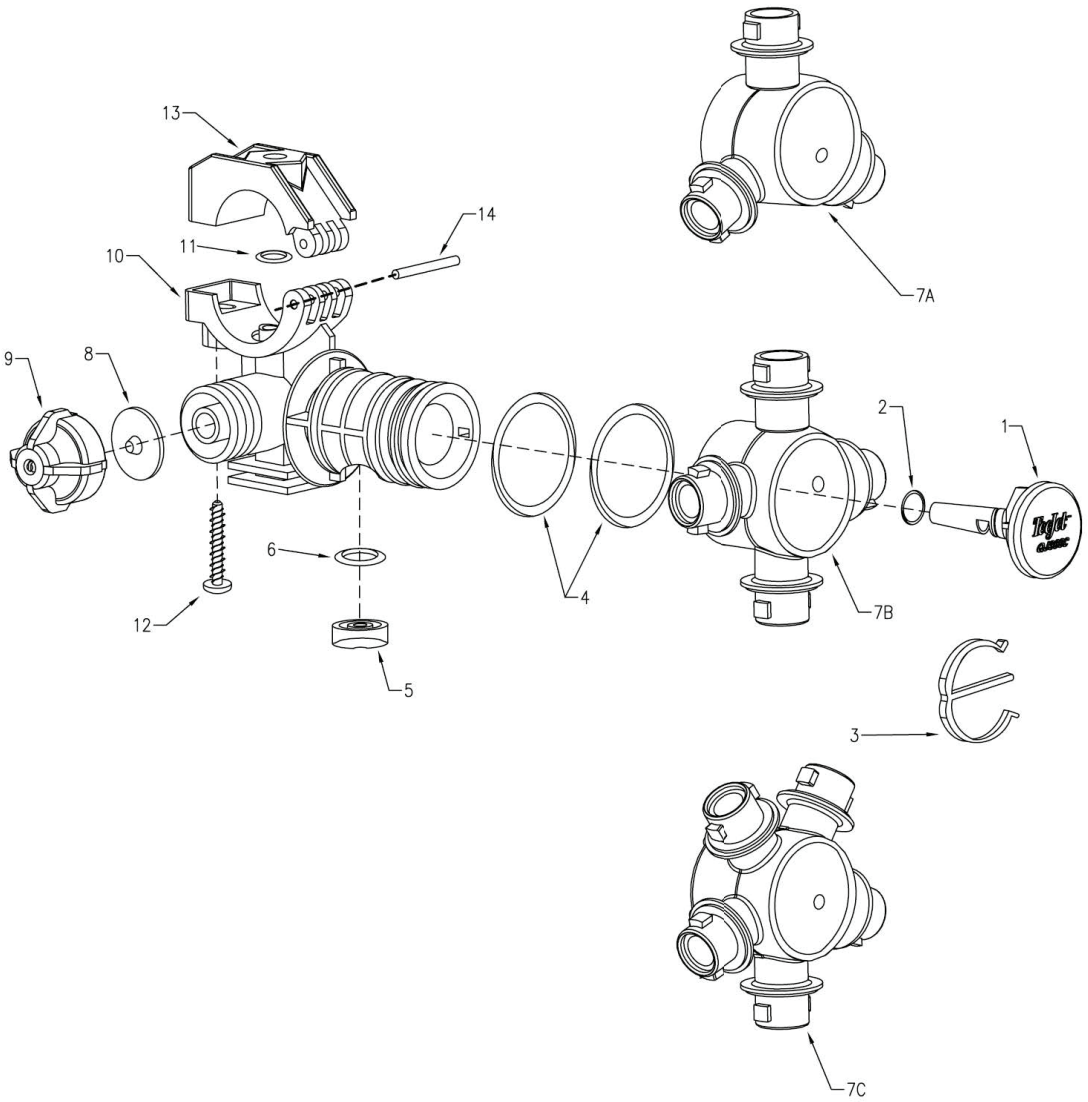

IF DESCRIPTION PREFIX IS ASSEMBLY DRAWING ONLY OR PRODUCTION DRAWING ONLY THE ITEM IS NOT FOR SALE			
ITEM	PART NUMBER	DESCRIPTION	QTY
1	GA5074440	PLUG, NYLON, TEEJET, SUIT, CLOCKFACE, CP38930-8-NYB	1
2	GA5074435	O-RING, TEEJET, CLOCKFACE, EPDM, CP7717-2-13-EPR	1
-	GA5074455	O-RING, TEEJET, CLOCKFACE, VITON, CP7717-2-13-VI	-
3	GA5077496	E CLIP, NOZZLE BODY, TEEJET, CP38931-NYB	1
4	GA5077609	O'RING, CP7717-M28X3-EPRTFE	2
-	GA5077609	O'RING, CP7717-M28X3-EPRTFE	-
5	GA5077557	QJ360 SEAL F/CF&E, CP56726-VITFE	1
6	GA5077605	O RING VITON, CP7717-2-111-VI	1
7A	GA5077491	NOZZLE BODY TURRET, 3 OUTLET CLOCK FACE STYLE, TEEJET, CP38921-2-NYB	1
7B	GA5074445	NOZZLE BODY TURRET, 4 OUTLET CLOCK FACE STYLE TEEJET, CP38922-2-NYB	-
7C	GA5074450	NOZZLE BODY TURRET, 5 OUTLET CLOCK FACE STYLE, CP38923-2-NYB	-
8	GA5077439	CHEMSAVER, DIAPHRAGM, CP21953-EPR, TEEJET	1
-	GA5077440	DIAPHRAGM, VITON, NOZZLE BODY CHECK VALVE, TEEJET	-
9	GA5076670	CHEMSAVER, 10PSI, BLACK, TEEJET, 21950-10-NYB	1
10	GA5077501	1/2 BODY FOR 360C, CP38942-2-NYB	1
-	GA5077493	3/4 360C BODY NYLON, CP38925-2-NYB	-
-	GA5077494	BODY, 360 SERIES 1", TEEJET, CP38926-2-NYB	-
11	GA5077605	O RING VITON, CP7717-2-111-VI	1
12	GA5077536	SCREW, SUIT TEEJET NOZZLE BODIES QJ360 AND QJ17560, 1-1/4 LONG, SS, CP48255-11/4-302SS	1
13	GA5077534	1/2 UPPER CLAMP, CP48223-NYB	1
-	GA5077532	CLAMP, NOZZLE BODY, 3/4, TEEJET, CP48221-NYB	-
-	GA5077533	NOZZLE BODY CLAMP, UPPER, 1, TEEJET, CP48222-NYB	-
-	GA5077535	25MM UPPER CLAMP, CP48224-NYB	-
14	GA5077537	PIN, NOZZLE BODY CLAMP, TEEJET, CP48256-SS	1
GA5077970 GOLDACRES		NOZZLE BODY, TRIPLE, TRIJET, CLOCK FACE, 1", TEEJET, QJ363C-1-NYB	REV 00

Nozzle Body Assembly - Stackable, Teejet Clock Face Body

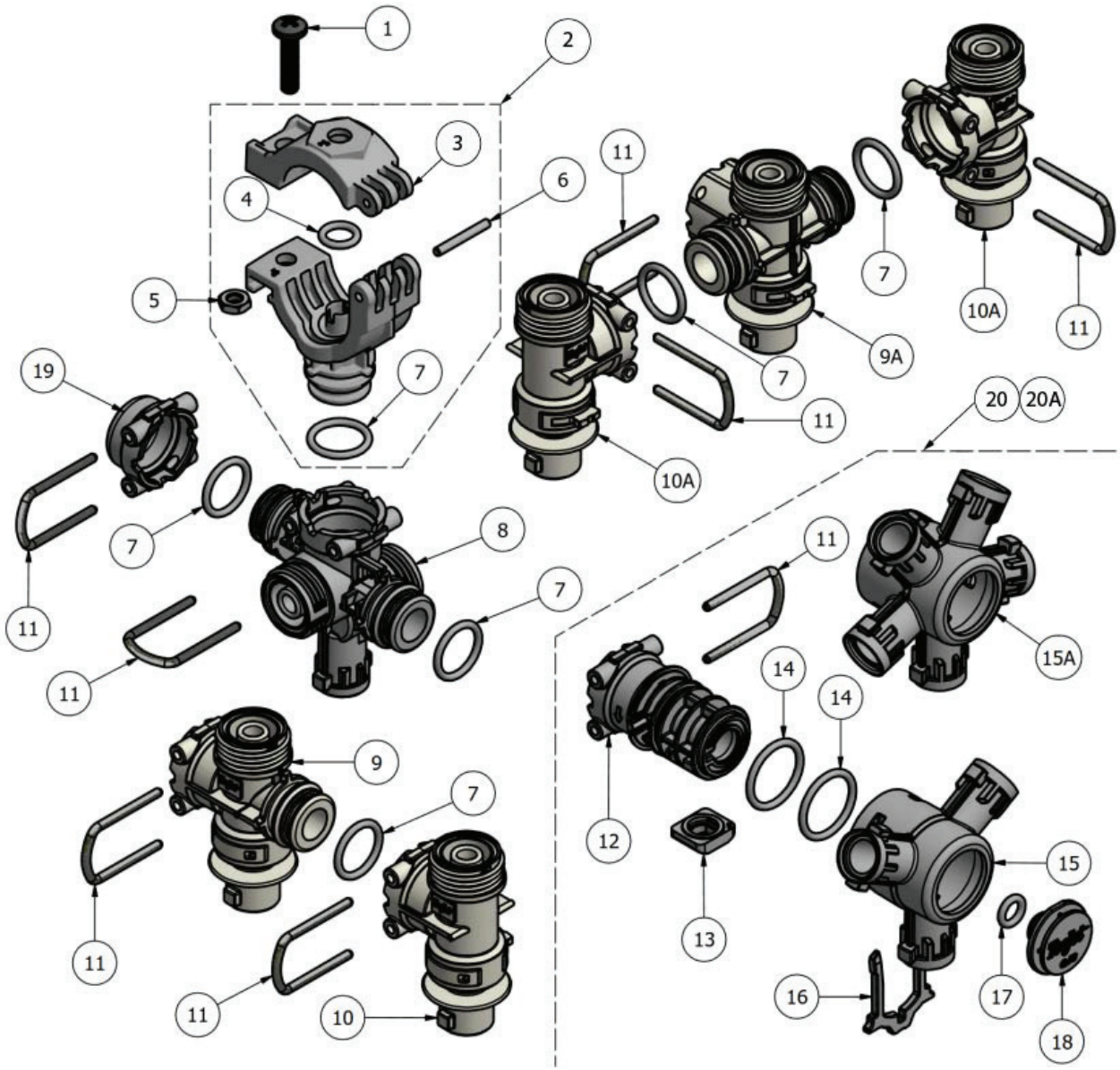

IF DESCRIPTION PREFIX IS ASSEMBLY DRAWING ONLY OR PRODUCTION DRAWING ONLY THE ITEM IS NOT FOR SALE			
ITEM	PART NUMBER	DESCRIPTION	QTY
1	GA5004067	BHCS M6 X 25 SS A2-70	-
2	GA5026767	NOZZLE BODY, 1", SIDE MOUNT, TEEJET, NYLON BLACK	-
3	GA5026768	CLAMP, UPPER, 1", NYLON (BLACK),TEEJET	-
4	GA5077596	O RING, 14.5 X 2.5, BUNA, CP7717-2/110-BU, SUITS QJ7421 SERIES NOZZLE BODIES.	-
5	GA5049030	NUT M6 SS	-
6	GA5077537	PIN, NOZZLE BODY CLAMP, TEEJET, CP48256-SS	-
7	GA5077597	O-RING, VITON, CP7717-2/110-VI, SUITS QJ7421 SERIES NOZZLE BODIES.	-
8	GA5026773	MAIN BODY, STACKABLE, SINGLE AND TRIJET, 1", QJS-D-1-XX-3-P	-
9	GA5026774	OUTLET, MIDDLE, NOZZLE BODY, STACKABLE, TEEJET	-
9A	GA5026775	OUTLET, TEE, NOZZLE BODY, STACKABLE, TEEJET	-
10	GA5026776	OUTLET, END, NOZZLE BODY, STACKABLE, TEEJET, (1 OR 2 OUTLET)	-
10A	GA5026777	OUTLET, END, NOZZLE BODY, STACKABLE, TEEJET, (3 OUTLET)	-
11	GA5026778	CLIP, RETAINING, TEEJET, 304-SS	-
12	GA5026780	BODY, TURRET, QJS-D, TEEJET	-
13	GA5026782	SEAL, VITON, NOZZLE BODY, TEEJET, QJS-D	-
14	GA5026785	O-RING, 21.89 X 2.62, VITON	-
15	GA5026786	TURRET, NOZZLE BODY, 3 OULET, CLOCK FACE, TEEJET, QJS-D	-
15A	GA5026787	TURRET, NOZZLE BODY, 5 OUTLET, CLOCK FACE, TEEJET, QJS-D	-
16	GA5026788	CLIP, QJ370, NYLON, TEEJET	-
17	GA5026789	O-RING, 7.59 X 2.62, VITON, #109	-
18	GA5026790	PLUG, QJ370, TEEJET	-
19	GA5026791	END CAP, QJS-D, TEEJET	-
20	GA5026792	TURRET ASSY, 3 OUTLET, QJS-D, TEEJET	-
20A	GA5026793	TURRET ASSY, 5 OUTLET, QJS-D, TEEJET	-
GA8100685 GOLDACRES		NOZZLE BODY, STACKABLE, SINGLE AND TRIJET, 1", QJS-D-1-XX-3-P	REV 00

Nozzle Body Assembly, Altek Dual Spray Body

REPLACEMENT PARTS			
ITEM	PART NUMBER	DESCRIPTION	QTY
-	GA8100664	NOZZLE BODY, TWIN / DUAL, AIR SHUT OFF, 1", SLAVE, ALTEK 82063	-

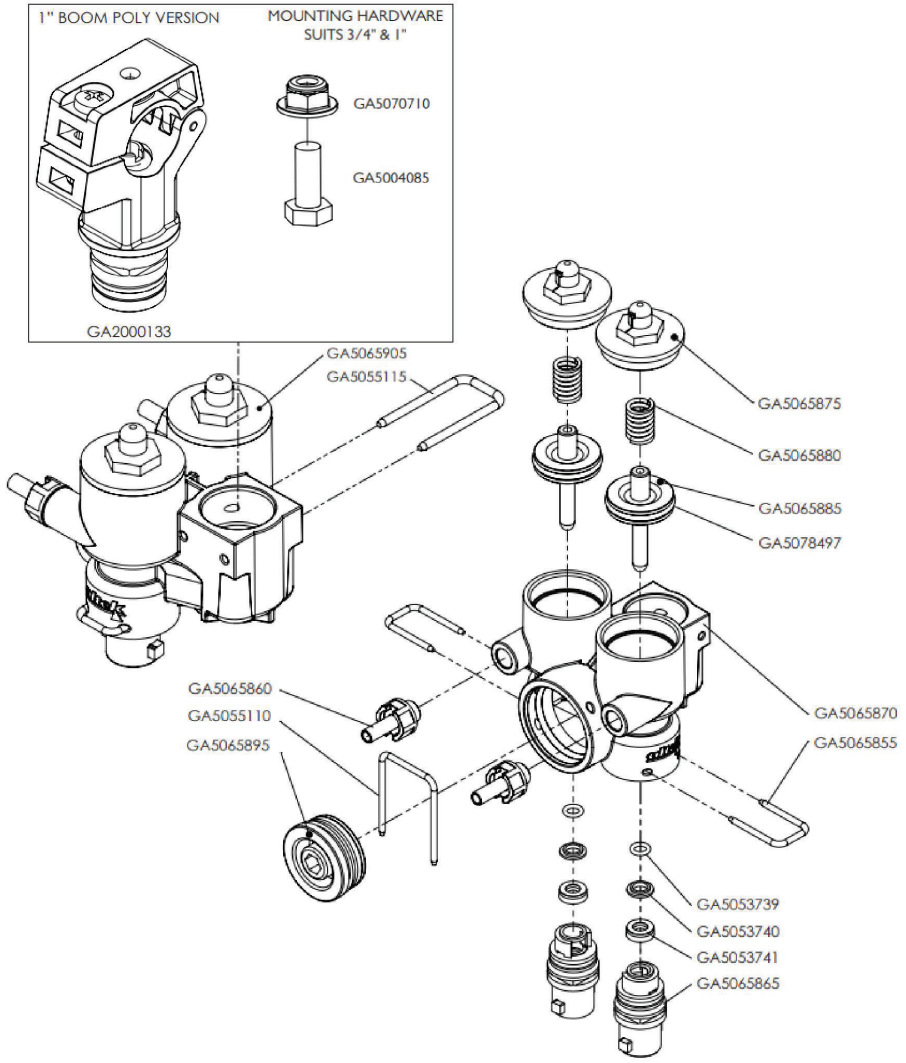

ASSEMBLY DRAWING ONLY ASSEMBLY ON FOLLOWING PAGES			
ITEM	PART NUMBER	DESCRIPTION	QTY
-	GA5070710	NUT FLANGE PLASTIC M8 X 1.25	1
-	GA5004085	BOLT M8 X 20 GR8.8 ZP	1
-	GA2000133	CLAMP, DUAL NOZZLE BODY, SUIT 1" BOOM POLY, INCLUDES SCREW, NUT AND O RING, ALTEK	1
-	GA5065905	LOWER BODY, MULTI SPRAY, ALTEK	1
-	GA5055115	U CLIP, 20 X 40 X 3 mm, 82297, SUIT ALTEK NOZZLE BODY GA5065845	1
-	GA5065875	TOP CAP, 82538, SUIT ALTEK NOZZLE BODY	2
-	GA5065880	SPRING, 47902, SUIT ALTEK NOZZLE BODY	2
-	GA5065885	PLUNGER, 82537, SUIT ALTEK NOZZLE BODY	2
-	GA5078497	O RING, 23.5 X 2.6 mm, FPM80	-
-	GA5065870	OUTER BODY HOUSING, 82418, SUIT ALTEK TWIN NOZZLE BODY	1
-	GA5065855	U-CLIP, 21931, SUIT ALTEK NOZZLE BODY	2
-	GA5065865	OUTLET, VALVE INNER, NOZZLE BODY, ALTEK, 82532	2
-	GA5065860	HOSE BARB, AIR FITTING, 6mm HOSE X MALE THREAD, 82572, SUIT ALTEK NOZZLE BODY, INCLUDES SEAL	2
-	GA5055110	U CLIP 30 X 41 X 2.5 mm, 82298, TO SUIT GA5065845	1
-	GA5065895	SHUTOFF PLUG SUIT ALTEK NOZZLE BODY, 82539	1
-	GA5053739	O RING, 5.6 X 1.8 FPM, SUIT GA5065845, ALTEK	2
-	GA5053740	RETAINING DISK, 11.8 X 6.8 X 2, SUIT GA5065845, ALTEK	2
-	GA5053741	LIP SEAL, 6 X 12 X 4.2 FPM, SUIT GA5065845, ALTEK	4
GA8100664 GOLDACRES		NOZZLE BODY, TWIN / DUAL, AIR SHUT OFF, 1", SLAVE, ALTEK 82063	REV 00

Altek Spray Stop Assembly, 4mm

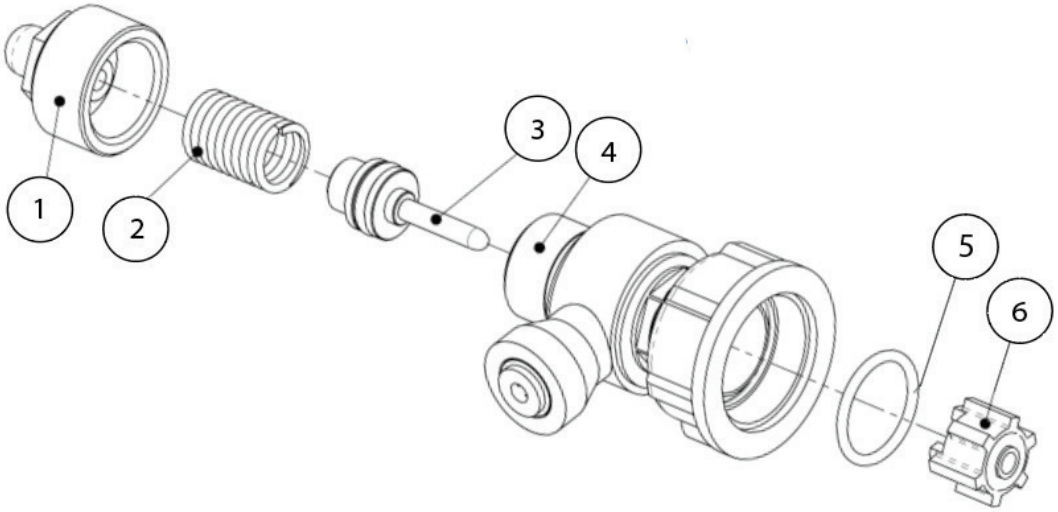

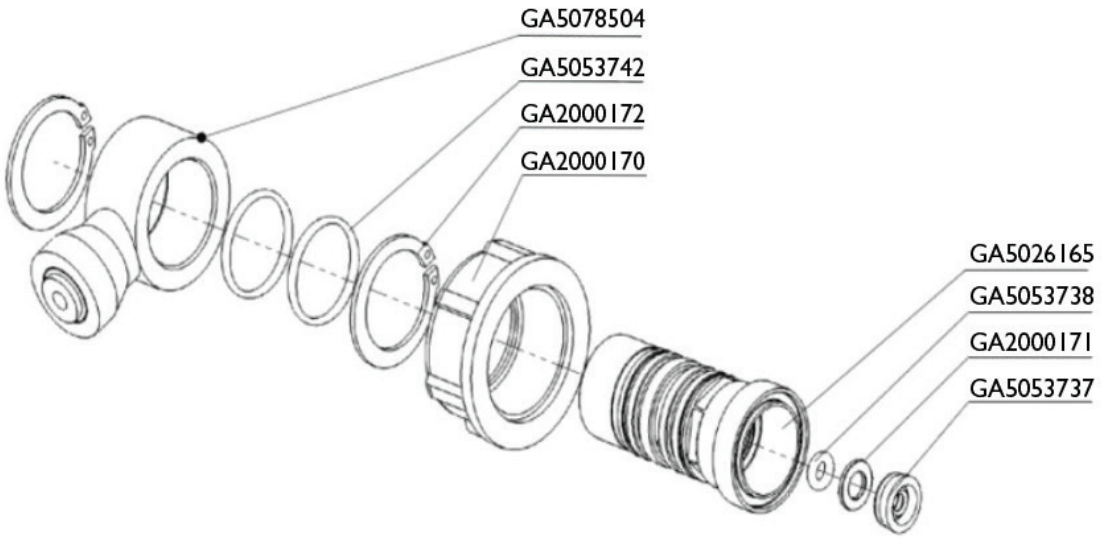

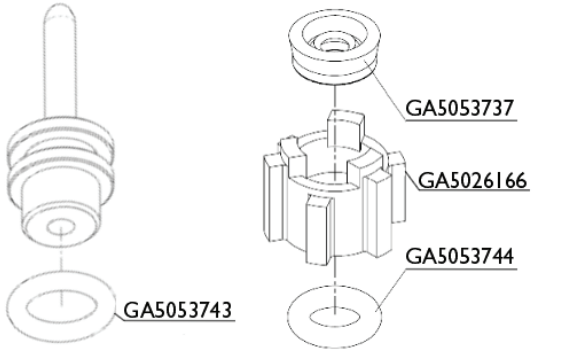

IF DESCRIPTION PREFIX IS ASSEMBLY DRAWING ONLY OR PRODUCTION DRAWING ONLY THE ITEM IS NOT FOR SALE			
ITEM	PART NUMBER	DESCRIPTION	QTY
1	GA5053731	END CAP WITH BREATHER, SUIT GA5065520 SPRAY STOP, ALTEK	1
2	GA5053732	SPRING, 10 BAR, SUIT GA5065520 GA5065525, SPRAY STOP, ALTEK	1
3	GA5053733	PISTON, SUIT GA5065520 SPRAY STOP, ALTEK	1
4	GA2000167	SPRAY STOP BODY, PUSH IN TYPE, ALTEK, 83051	1
5	GA5053735	ORING EXTERNAL, SUIT GA5065520 SPRAY STOP, ALTEK	1
6	GA5053736	PLUNGER, SUIT GA5065520 GA5065523 GA5065525 SPRAY STOP, ALTEK	1
-	GA5078504	CONNECTOR RING, SPRAY STOP, 4mm VERSION, ALTEK, 83773, 85250	1
-	GA5053742	O RING, 16 X 1.5, SUIT GA5065520 SPRAY STOP, ALTEK	1
-	GA2000172	CIRCLIP, SPRAY STOP, ALTEK, 81376	1
-	GA2000170	FLY NUT, SPRAY STOP, ALTEK, 80924	1
-	GA5026165	BODY, AIRFEED, ALTEK, 81373	1
-	GA5053738	O RING, 3.68 X 1.78 FPM 75, SUIT GA5065520 SPRAY STOP, ALTEK	1
-	GA2000171	RIVET SLICE, SPRAY STOP, ALTEK, 41162	1
-	GA5053737	NUT RING, 4 X 10 X 4.2 FPM SUIT GA5065520 SPRAY STOP, ALTEK	1
-	GA5053743	O RING, 9 X 2.5, SUIT GA5065520 SPRAY STOP, ALTEK	1
-	GA5026166	NUT, PLUNGER, NUT ONLY, ALTEK, 80926	1
-	GA5053744	O RING, 6.02 X 2.62, SUIT GA5065520 SPRAY STOP, ALTEK	1
GA5065523 GOLDACRES		SPRAY STOP, 4mm, RAPIDFIRE, SUIT TEEJET NOZZLE BODY, ALTEK	REV 00

Altek Spray Stop Assembly, 6mm

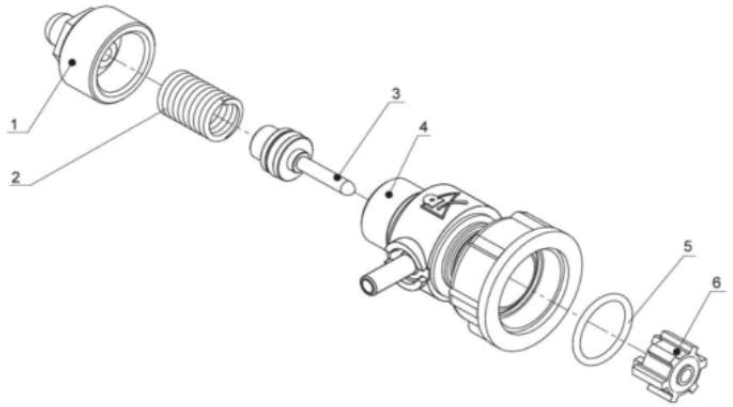

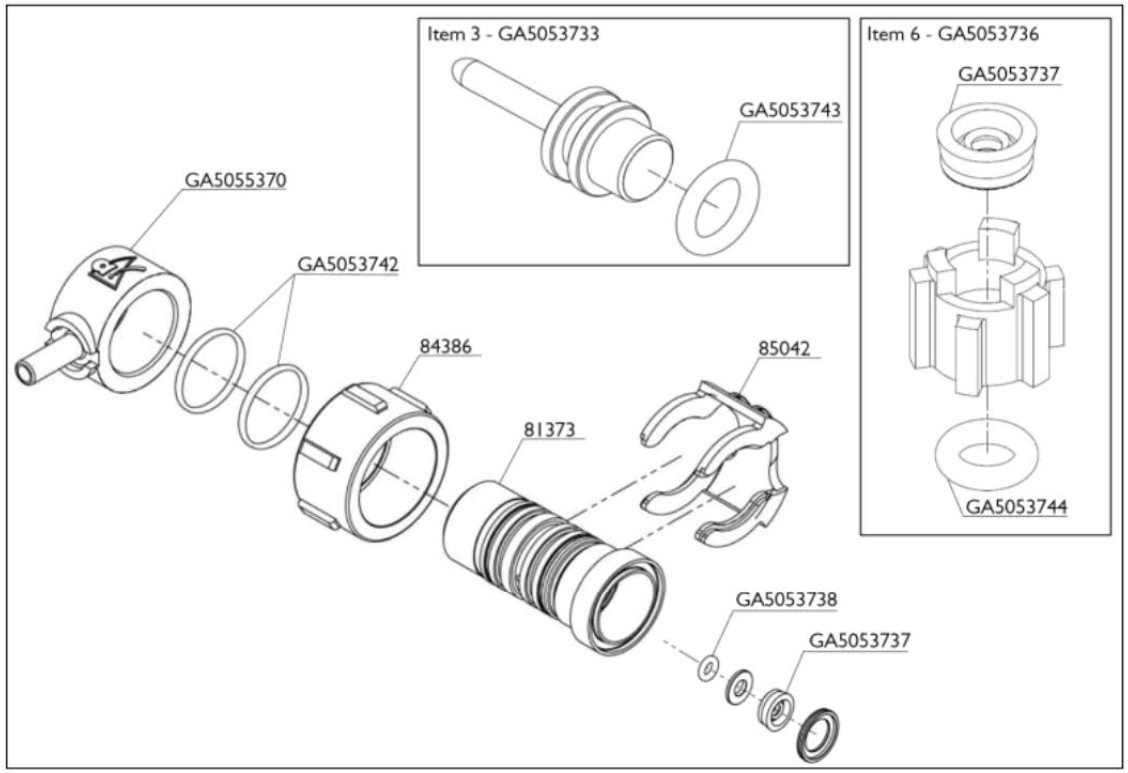

IF DESCRIPTION PREFIX IS ASSEMBLY DRAWING ONLY OR PRODUCTION DRAWING ONLY THE ITEM IS NOT FOR SALE			
ITEM	PART NUMBER	DESCRIPTION	QTY
-	GA5065520	SPRAY STOP, 6mm, RAPIDFIRE, SUIT TEEJET NOZZLE BODY, ALTEK	-
1	GA5053731	END CAP WITH BREATHER, SUIT GA5065520 SPRAY STOP, ALTEK	-
2	GA5053732	SPRING, 10 BAR, SUIT GA5065520 GA5065525, SPRAY STOP, ALTEK	1
3	GA5053733	PISTON, SUIT GA5065520 SPRAY STOP, ALTEK	1
4	GA5053734	VALVE BODY, SUIT GA5065520 SPRAY STOP, ALTEK	1
5	GA5053735	ORING EXTERNAL, SUIT GA5065520 SPRAY STOP, ALTEK	1
6	GA5053736	PLUNGER, SUIT GA5065520 GA5065523 GA5065525 SPRAY STOP, ALTEK	1
-	GA5053737	NUT RING, 4 X 10 X 4.2 FPM SUIT GA5065520 SPRAY STOP, ALTEK	1
-	GA5053738	O RING, 3.68 X 1.78 FPM 75, SUIT GA5065520 SPRAY STOP, ALTEK	1
-	GA5053742	O RING, 16 X 1.5, SUIT GA5065520 SPRAY STOP, ALTEK	1
-	GA5053743	O RING, 9 X 2.5, SUIT GA5065520 SPRAY STOP, ALTEK	1
-	GA5053744	O RING, 6.02 X 2.62, SUIT GA5065520 SPRAY STOP, ALTEK	1
-	GA5055370	NIPPLE, 6mm, SUIT GA5065520, SPRAY STOP BODY, RAPID FIRE, ALTEK	1
GA5065520 GOLDACRES		SPRAY STOP, 6mm, RAPIDFIRE, SUIT TEEJET NOZZLE BODY, ALTEK	REV 00

Nozzles, Altek Spray Stop, 6mm in 4mm Out

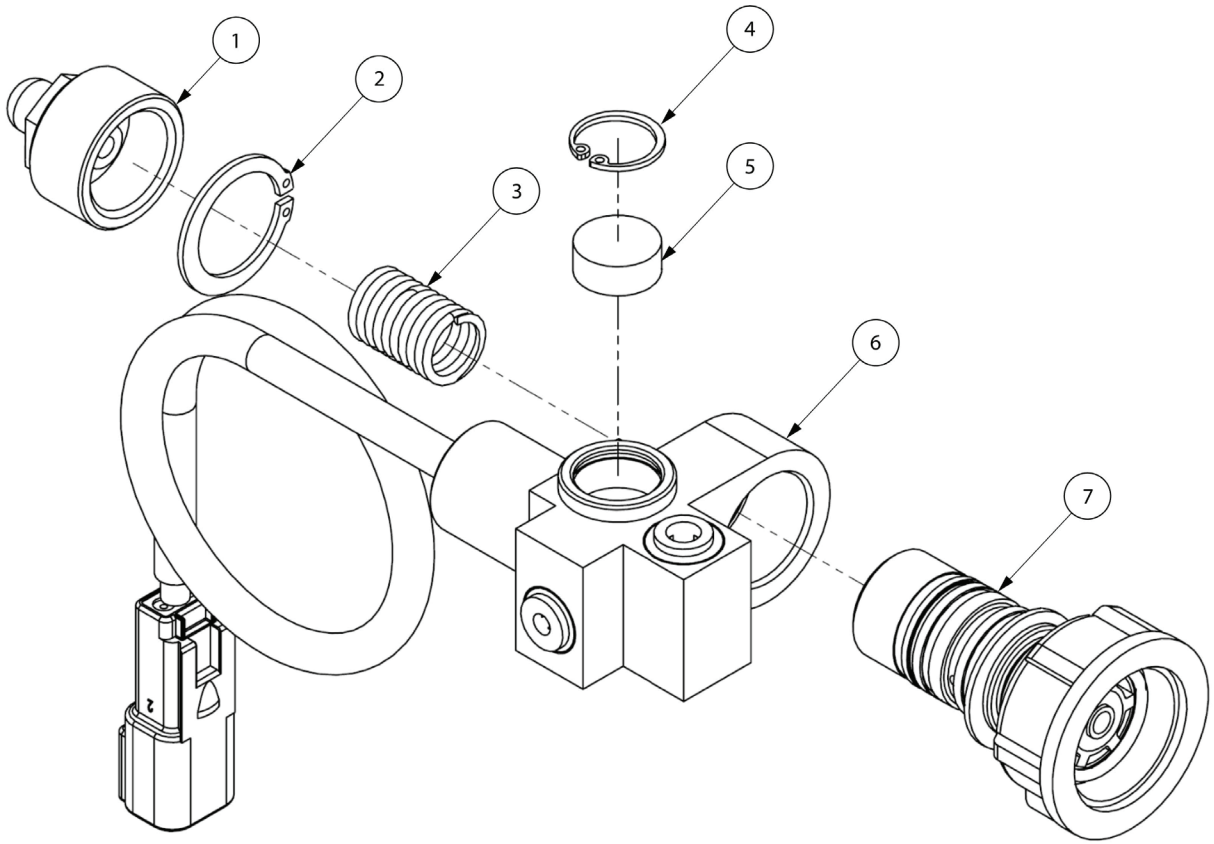

ASSEMBLY DRAWING ONLY ASSEMBLY ON FOLLOWING PAGES			
ITEM	PART NUMBER	DESCRIPTION	QTY
1	GA5053731	END CAP WITH BREATHER, SUIT GA5065520 SPRAY STOP, ALTEK	1
2	GA2000172	CIRCLIP, SPRAY STOP, ALTEK, 21x1.2 DIN-471	1
3	GA5053732	SPRING, 10 BAR, SUIT GA5065520 GA5065525, SPRAY STOP, ALTEK	1
4	GA5026167	CIRCLIP, SUIT, SPRAY STOP, ALTEK	1
5	GA5026168	PLUNGER, BODY, DIRECT CONTROL NOZZLE BODY, ALTEK, SUIT, GA5065525	1
6	GA5026169	BODY, DIRECT CONTROL, MASTER, ALTEK, SUIT, GA5065525	1
7	GA5078810	CARTRIDGE, SPRAY-STOP, ALTEK	1
GA5065525 GOLDACRES		SPRAY STOP, SOLENOID DIRECT CONTROL, RAPIDFIRE, 6mm IN, 4mm OUT, ALTEK,WITH DEUSTCH PLUG	REV 00

Nozzles, Direct Control, Dual, Altek

REPLACEMENT PARTS			
ITEM	PART NUMBER	DESCRIPTION	QTY
-	GA8100663	NOZZLE BODY, TWIN DUAL, AIR SHUT OFF, 1", MASTER, ALTEK 84743	-

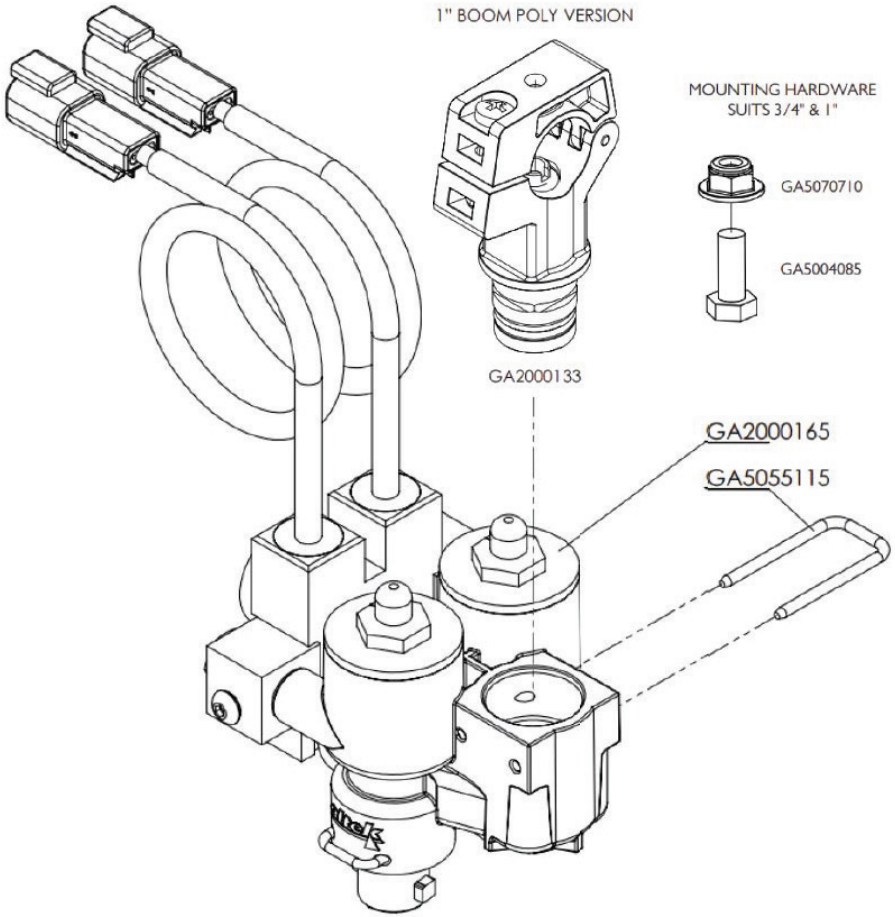

IF DESCRIPTION PREFIX IS ASSEMBLY DRAWING ONLY OR PRODUCTION DRAWING ONLY THE ITEM IS NOT FOR SALE			
ITEM	PART NUMBER	DESCRIPTION	QTY
-	GA5070710	NUT FLANGE PLASTIC M8 X 1.25	1
-	GA5004085	BOLT M8 X 20 GR8.8 ZP	1
-	GA2000133	CLAMP, DUAL NOZZLE BODY, SUIT 1" BOOM POLY, INCLUDES SCREW, NUT AND O RING, ALTEK	1
-	GA2000165	DUAL NOZZLE BODY ASSEMBLY, DIRECT CONTROL, ALTEK, 84188	1
-	GA5055115	U CLIP, 20 X 40 X 3 mm, 82297, SUIT ALTEK NOZZLE BODY GA5065845	1
GA8100663 GOLDACRES		NOZZLE BODY, TWIN / DUAL, AIR SHUT OFF, 1", MASTER, ALTEK 84743	REV 00

Nozzles, Direct Control, Dual Assembly

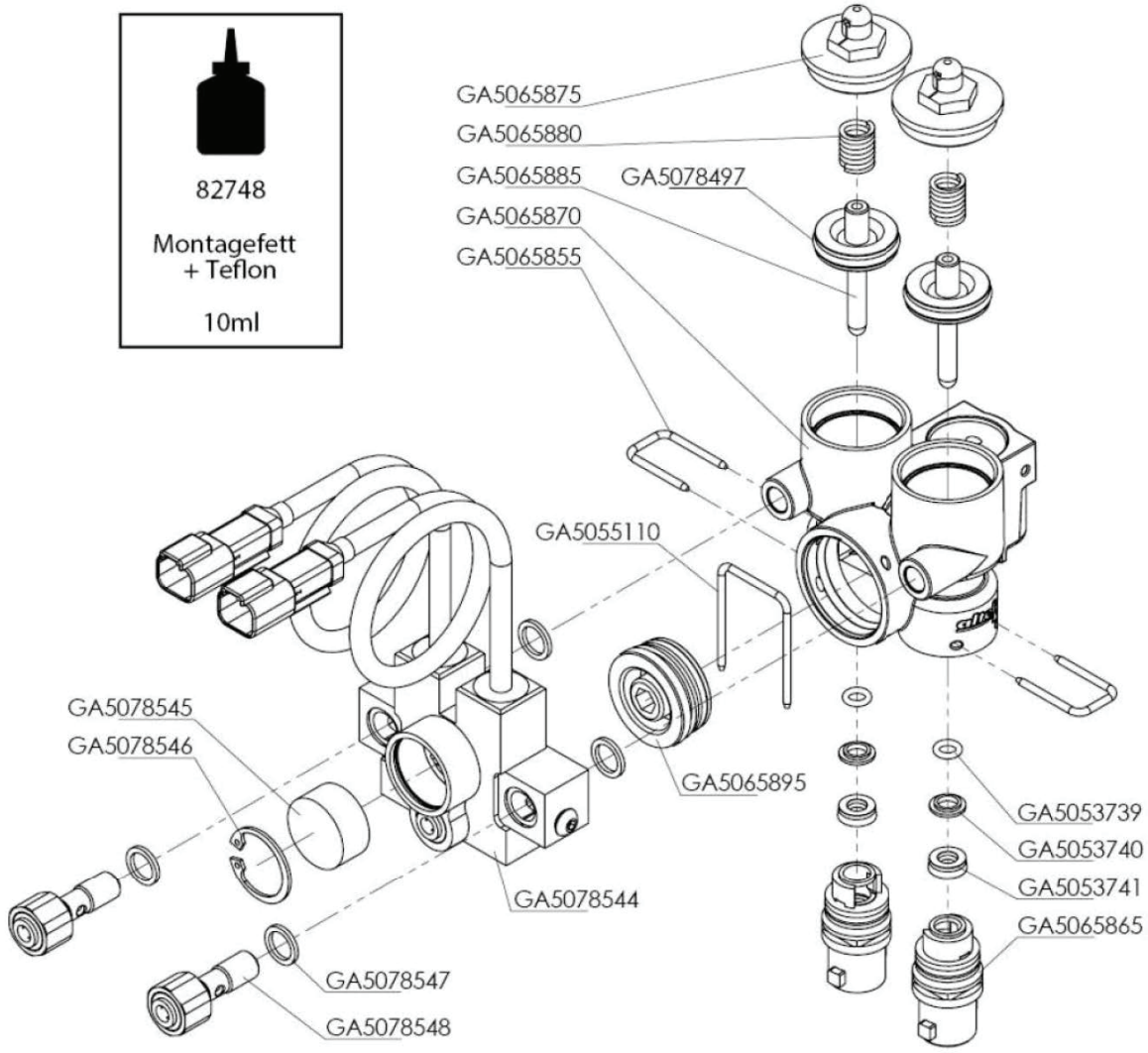

IF DESCRIPTION PREFIX IS ASSEMBLY DRAWING ONLY OR PRODUCTION DRAWING ONLY THE ITEM IS NOT FOR SALE			
ITEM	PART NUMBER	DESCRIPTION	QTY
-	GA5078544	DUAL SOLENOID VALVE, INCLUDING 200mm CABLES & DEUTSCH CONNECTORS, ALTEK, 84187	1
-	GA5065870	OUTER BODY HOUSING, 82418, SUIT ALTEK TWIN NOZZLE BODY	1
-	GA5053739	O RING, 5.6 X 1.8 FPM, SUIT GA5065845, ALTEK	2
-	GA5053740	RETAINING DISK, 11.8 X 6.8 X 2, SUIT GA5065845, ALTEK	2
-	GA5053741	LIP SEAL, 6 X 12 X 4.2 FPM, SUIT GA5065845, ALTEK	2
-	GA5065865	OUTLET, VALVE INNER, NOZZLE BODY, ALTEK, 82532	2
-	GA5065855	U-CLIP, 21931, SUIT ALTEK NOZZLE BODY	2
-	GA5065885	PLUNGER, 82537, SUIT ALTEK NOZZLE BODY	2
-	GA5078497	O RING, 23.5 X 2.6 mm, FPM80	-
-	GA5065880	SPRING, 47902, SUIT ALTEK NOZZLE BODY	2
-	GA5065875	TOP CAP, 82538, SUIT ALTEK NOZZLE BODY	2
-	GA5065895	SHUTOFF PLUG SUIT ALTEK NOZZLE BODY, 82539	1
-	GA5055110	U CLIP 30 X 41 X 2.5 mm, 82298, TO SUIT GA5065845	1
-	GA5078547	SEAL, WHITE PVC, DUAL SOLENOID VALVE, ALTEK, 83172	4
-	GA5078545	BREATHER INSERT, 25.5 X 12 X 12 mm, DUAL SOLENOID VALVE, ALTEK, 84081	1
-	GA5078546	CIRCLIP, 26 X1.2 mm, DUAL SOLENOID VALVE, ALTEK, 84078	1
-	GA5078548	PUSH FITTING, AIR LINE, 6mm, DUAL SOLENOID VALVE, ALTEK, 83733	2
GA5078544 GOLDACRES		DUAL SOLENOID VALVE, INCLUDING 200mm CABLES & DEUTSCH CONNECTORS, ALTEK, 84187	REV 00

Boom Plumbing, 24 Section, 36mt, 250mm Spacing, RIVX

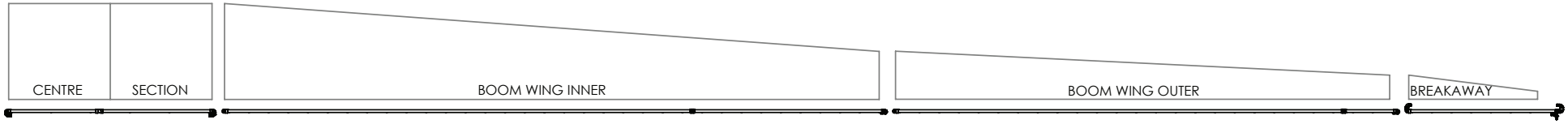

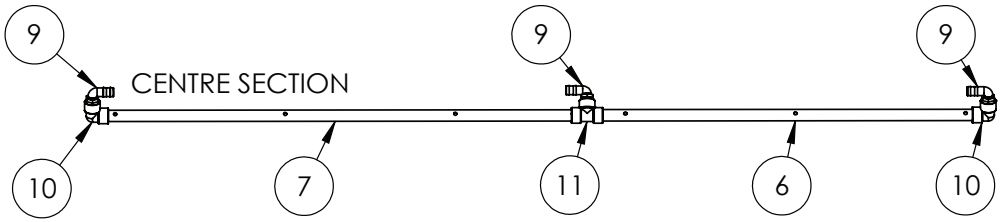



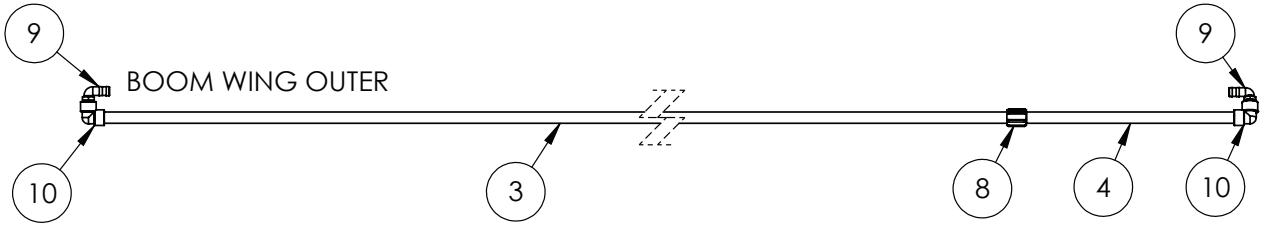

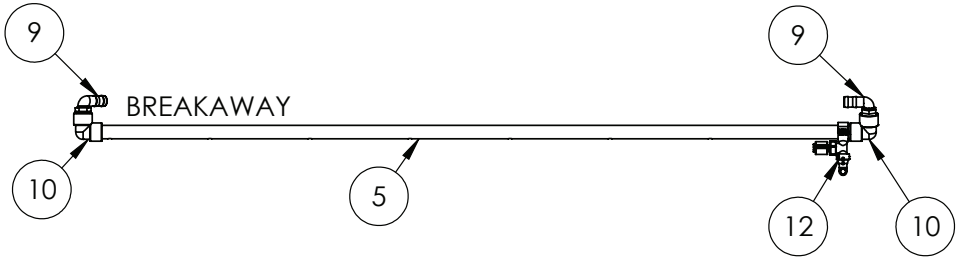

BUILD OPTIONS
10250 - TRI-TECH RIVX SERIES BOOM - 36M
65215 - PLUMBING STANDARD
65216 - PLUMBING PLUS

IF DESCRIPTION PREFIX IS ASSEMBLY DRAWING ONLY OR PRODUCTION DRAWING ONLY THE ITEM IS NOT FOR SALE			
ITEM	PART NUMBER	DESCRIPTION	QTY
1	GA4950510	BOOM POLY DRILLED, 1", 36m, LH & RH INNER SECTION A, 250mm, TRITECH S	2
2	GA4950515	BOOM POLY DRILLED, 1", 36m, LH & RH INNER SECTION B, 250mm, TRITECH S	2
3	GA4950480	BOOM POLY DRILLED, 1", 36m, LH & RH OUTER SECTION A, 250mm, TRITECH S	2
4	GA4950485	BOOM POLY DRILLED, 1", 36m, LH & RH OUTER SECTION B, 250mm, TRITECH S	2
5	GA4909553	BOOM POLY DRILLED, 1", BREAKAWAY LH & RH, 250mm, BROARDACRE, TRITECH S	2
6	GA4950355	BOOM POLY DRILLED, 1", CENTRE SECTION LH, 500mm BROARDACRE, TRITECH S	1
7	GA4950360	BOOM POLY DRILLED, 1", CENTRE SECTION RH, 500mm BROARDACRE, TRITECH S	1
8	GA5077638	COUPLING, SOCKET, 1 FEMALE THREAD, BANJO, CPLG100	4
9	GA5077723	HOSE BARB, ELBOW, 90 DEGREE, 1" MALE X 1" HOSE, BANJO	15
10	GA5077655	STREET ELBOW, 90 DEGREE, 1 FEMALE THREAD X 1 FEMALE THREAD, BANJO, EL100-90	14
11	GA5078151	TEE, THREADED, 1" FEMALE, BANJO	1
12	GA4950015	ASSEMBLY DRAWING ONLY, FENCE LINE JET ASSEMBLY, LH, 1", TRITECH	1
	GA4950020	ASSEMBLY DRAWING ONLY, FENCE LINE JET ASSEMBLY, RH, 1", TRITECH	1
GA7500228 GOLDACRES		LAYOUT, BOOM SECTION PLUMBING, 24 SECTION, 36M, 250mm, RIVX	REV 00

Boom Plumbing, 36mt, 250mm Spacing, Dual Line, RIVX

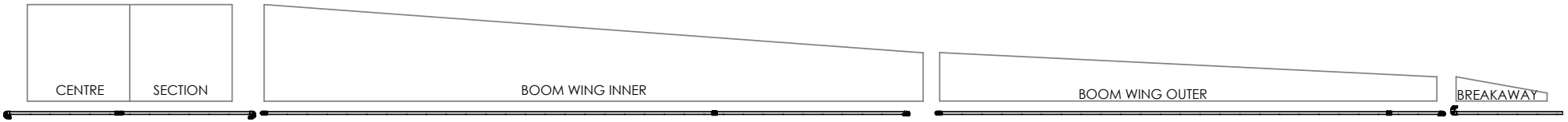

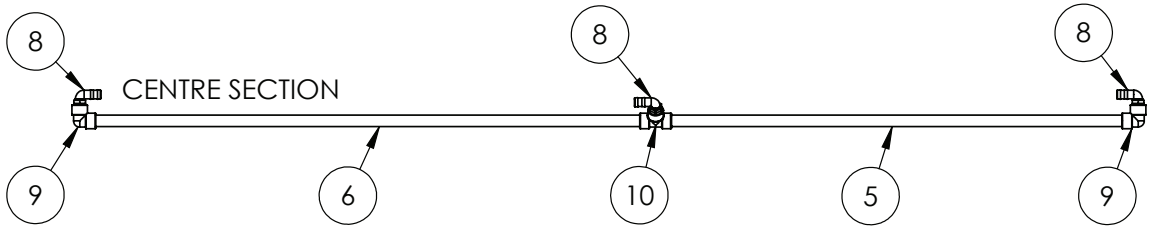

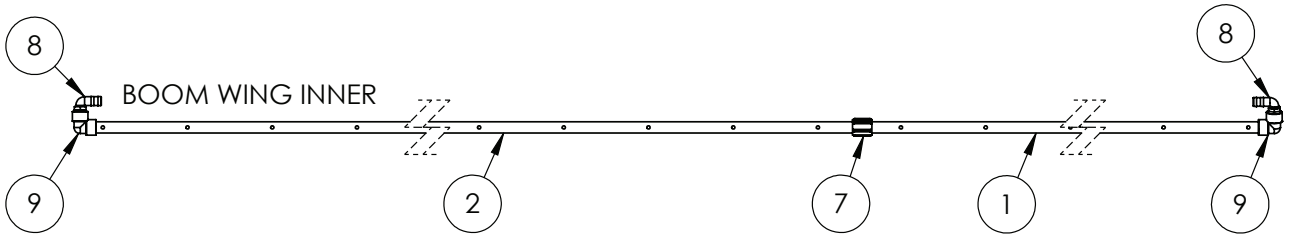

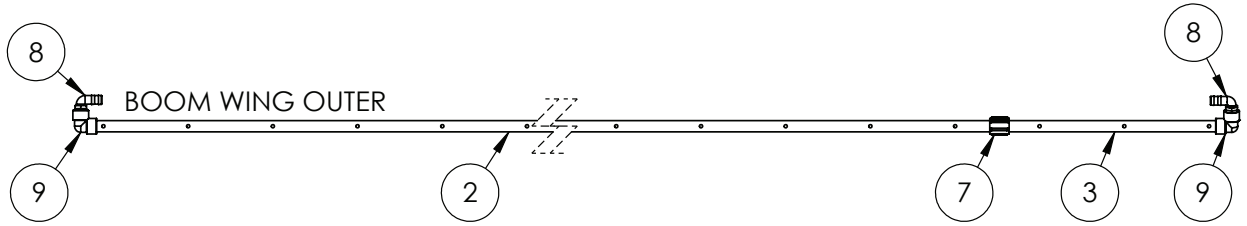

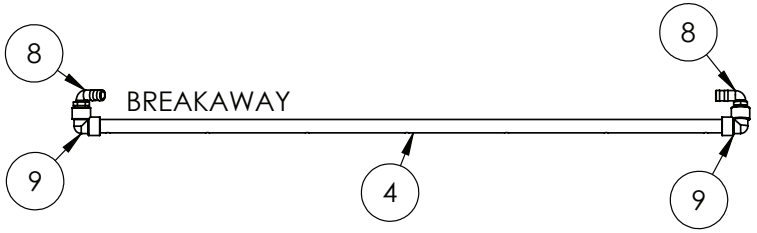

BUILD OPTIONS
10250 - TRI-TECH RIVX SERIES BOOM - 36M
65217 - PLUMBING DUAL LINES

IF DESCRIPTION PREFIX IS ASSEMBLY DRAWING ONLY OR PRODUCTION DRAWING ONLY THE ITEM IS NOT FOR SALE			
ITEM	PART NUMBER	DESCRIPTION	QTY
1	GA4909547	BOOM POLY DRILLED, 1", 36m, LH & RH INNER SECTION B, 250mm, TRITECH S	2
2	GA4950480	BOOM POLY DRILLED, 1", 36m, LH & RH OUTER SECTION A, 250mm, TRITECH S	4
3	GA4950485	BOOM POLY DRILLED, 1", 36m, LH & RH OUTER SECTION B, 250mm, TRITECH S	2
4	GA4909554	BOOM POLY DRILLED, 1", BREAKAWAY LH & RH, 250mm, BROARDACRE, TRITECH S	2
5	GA4909699	BOOM POLY DRILLED, 1", CENTRE SECTION LH, 250mm TRITECH S	1
6	GA4909698	BOOM POLY DRILLED, 1", CENTRE SECTION RH, 250mm, TRITECH S	1
7	GA5077638	COUPLING, SOCKET, 1 FEMALE THREAD, BANJO, CPLG100	4
8	GA5077723	HOSE BARB, ELBOW, 90 DEGREE, 1" MALE X 1" HOSE, BANJO	15
9	GA5077655	STREET ELBOW, 90 DEGREE, 1 FEMALE THREAD X 1 FEMALE THREAD, BANJO, EL100-90	14
10	GA5078151	TEE, THREADED, 1" FEMALE, BANJO	1
GA7500232 GOLDACRES		LAYOUT, BOOM SECTION PLUMBING, 65217 DUAL LINES, 36M, 250mm, RIVX	REV 00

GA7500229
UNDER DEVELOPMENT

GA7500233
UNDER DEVELOPMENT

Boom Plumbing, 24 Section, 48mt, 250mm Spacing

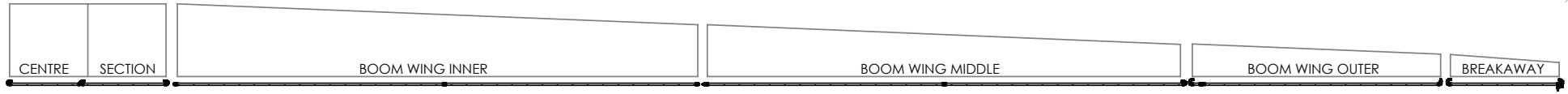

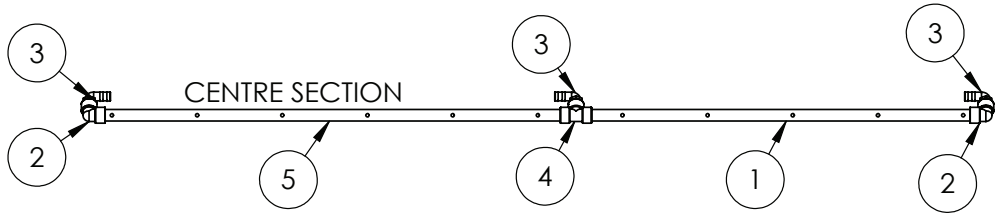

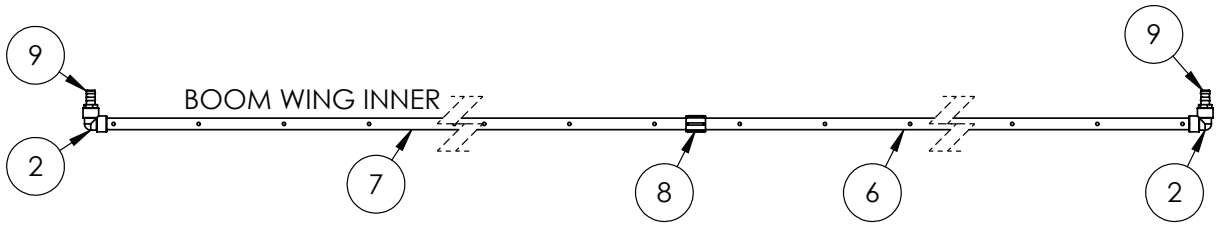

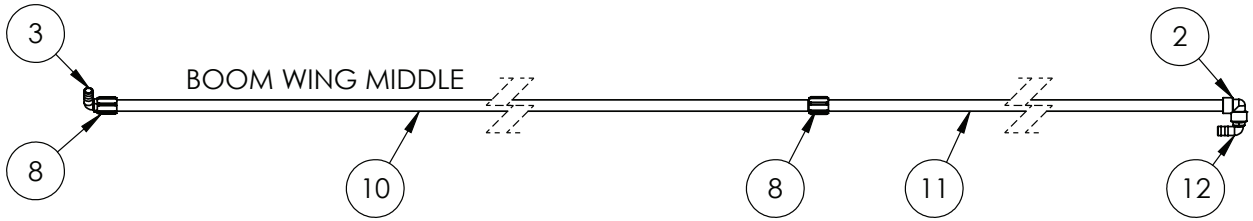

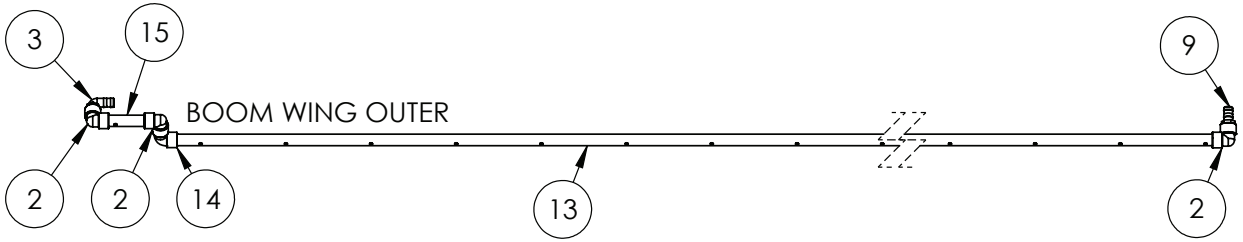

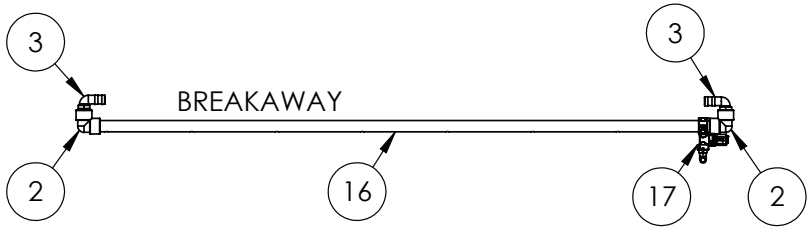

BUILD OPTIONS
10195 - TRI-TECH V SERIES BOOM - 48M
65215 - PLUMBING STANDARD
65216 - PLUMBING PLUS
65217 - PLUMBING DUAL LINES

IF DESCRIPTION PREFIX IS ASSEMBLY DRAWING ONLY OR PRODUCTION DRAWING ONLY THE ITEM IS NOT FOR SALE			
ITEM	PART NUMBER	DESCRIPTION	QTY
1	GA4951760	BOOM POLY DRILLED, 1", CENTRE SECTION LH, 48m	1
2	GA5077655	STREET ELBOW, 90 DEGREE, 1 FEMALE THREAD X 1 FEMALE THREAD, BANJO, EL100-90	18
3	GA5077723	HOSE BARB, ELBOW, 90 DEGREE, 1" MALE X 1" HOSE, BANJO	11
4	GA5078151	TEE, THREADED, 1" FEMALE, BANJO	1
5	GA4951765	BOOM POLY DRILLED, 1", CENTRE SECTION RH, 48m	1
6	GA4951775	BOOM POLY DRILLED, 1", 48m, LH & RH INNER SECTION 2	2
7	GA4951770	BOOM POLY DRILLED, 1", 48m, LH & RH INNER SECTION 1	2
8	GA5077638	COUPLING, SOCKET, 1 FEMALE THREAD, BANJO, CPLG100	6
9	GA5077718	HOSE BARB, STRAIGHT, 1 MALE THREAD X 1 HOSE, BANJO	6
10	GA4951780	BOOM POLY DRILLED, 1", 48m, LH & RH MIDDLE	2
11	GA4909672	BOOM POLY DRILLED, 1", 48m, LH & RH MIDDLE	2
12	GA5077723	HOSE BARB 90 DEGREE 1" BANJO	2
13	GA4951785	BOOM POLY DRILLED, 1", 48M, LH & RH OUTER, 250mm	2
14	GA5078137	STREET ELBOW, 90 DEGREE, 1 MALE X 1 FEMALE, BANJO	2
15	GA4951790	BOOM POLY DRILLED, 1", 48m, LH & RH OUTER, REMOTE	2
16	GA4951800	BOOM POLY DRILLED, 1", 48M, LH & RH BREAKAWAY, 250mm	2
17	GA4950015	ASSEMBLY DRAWING ONLY, FENCE LINE JET ASSEMBLY, LH, 1" TRITECH	1
	GA4950020	ASSEMBLY DRAWING ONLY, FENCE LINE JET ASSEMBLY, RH, 1", TRITECH	1
GA7500230 GOLDACRES		LAYOUT, BOOM SECTION PLUMBING, 24 SECTION, 48M, 250mm	REV 00

Boom Plumbing, 48mt, 250mm Spacing, Dual Lines

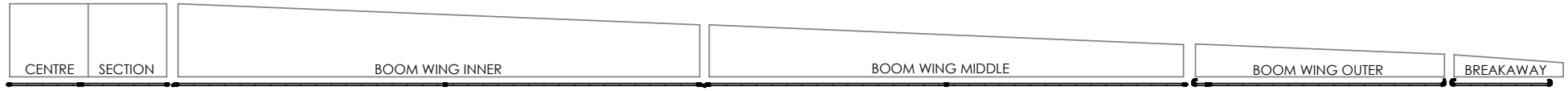

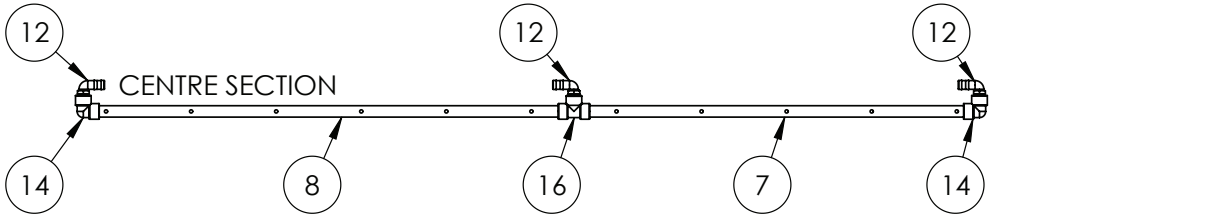

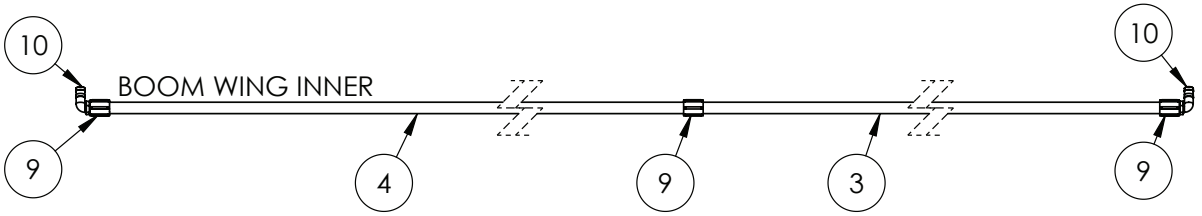

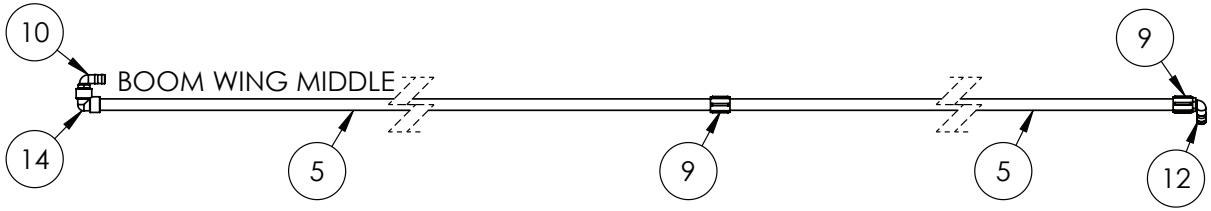

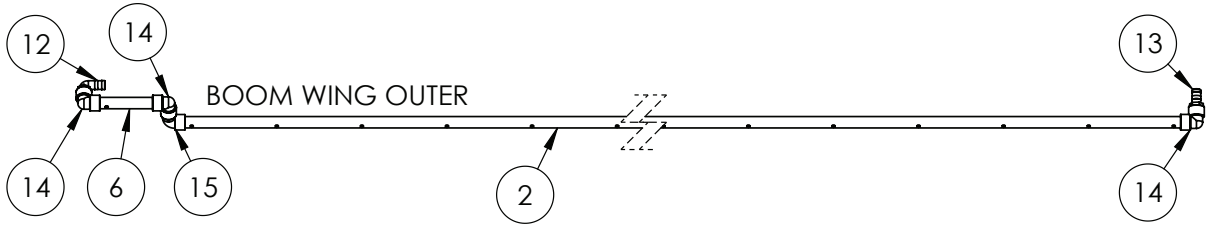

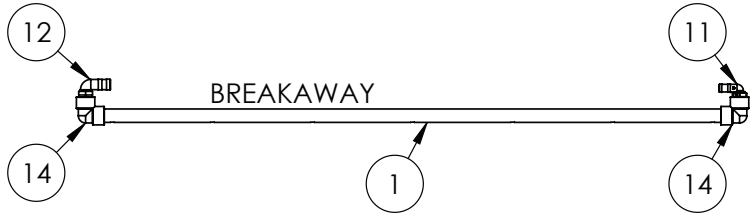

BUILD OPTIONS
10195 - TRI-TECH V SERIES BOOM - 48M
65217 - PLUMBING DUAL LINES

IF DESCRIPTION PREFIX IS ASSEMBLY DRAWING ONLY OR PRODUCTION DRAWING ONLY THE ITEM IS NOT FOR SALE			
ITEM	PART NUMBER	DESCRIPTION	QTY
1	GA4909682	BOOM POLY DRILLED, 1", 48M, LH & RH BREAKAWAY, 250mm	2
2	GA4909676	BOOM POLY DRILLED, 1", 48M, LH & RH OUTER, 250mm	2
3	GA4951770	BOOM POLY DRILLED, 1", 48m, LH & RH INNER SECTION 1	2
4	GA4951775	BOOM POLY DRILLED, 1", 48m, LH & RH INNER SECTION 2	2
5	GA4951780	BOOM POLY DRILLED, 1", 48m, LH & RH MIDDLE	4
6	GA4909677	BOOM POLY DRILLED, 1", 48m, LH & RH OUTER, REMOTE	2
7	GA4951760	BOOM POLY DRILLED, 1", CENTRE SECTION LH, 48m	1
8	GA4951765	BOOM POLY DRILLED, 1", CENTRE SECTION RH, 48m	1
9	GA5077638	COUPLING, SOCKET, 1 FEMALE THREAD, BANJO, CPLG100	10
10	GA5077723	HOSE BARB 90 DEGREE 1" BANJO	6
11	GA5077719	HOSE BARB, ELBOW, 90 DEGREE, 1 MALE THREAD X 3/4 HOSE, BANJO	2
12	GA5077723	HOSE BARB, ELBOW, 90 DEGREE, 1" MALE X 1" HOSE, BANJO	9
13	GA5077718	HOSE BARB, STRAIGHT, 1 MALE THREAD X 1 HOSE, BANJO	2
14	GA5077655	STREET ELBOW, 90 DEGREE, 1 FEMALE THREAD X 1 FEMALE THREAD, BANJO, EL100-90	14
15	GA5078137	STREET ELBOW, 90 DEGREE, 1 MALE X 1 FEMALE, BANJO	2
16	GA5078151	TEE, THREADED, 1" FEMALE, BANJO	1
GA7500234 GOLDACRES		LAYOUT, BOOM SECTION PLUMBING, 65217 DUAL LINES, 48M, 250mm, RIVX	REV 00

Boom, Recirculation Poly's, 36mt - 42mt

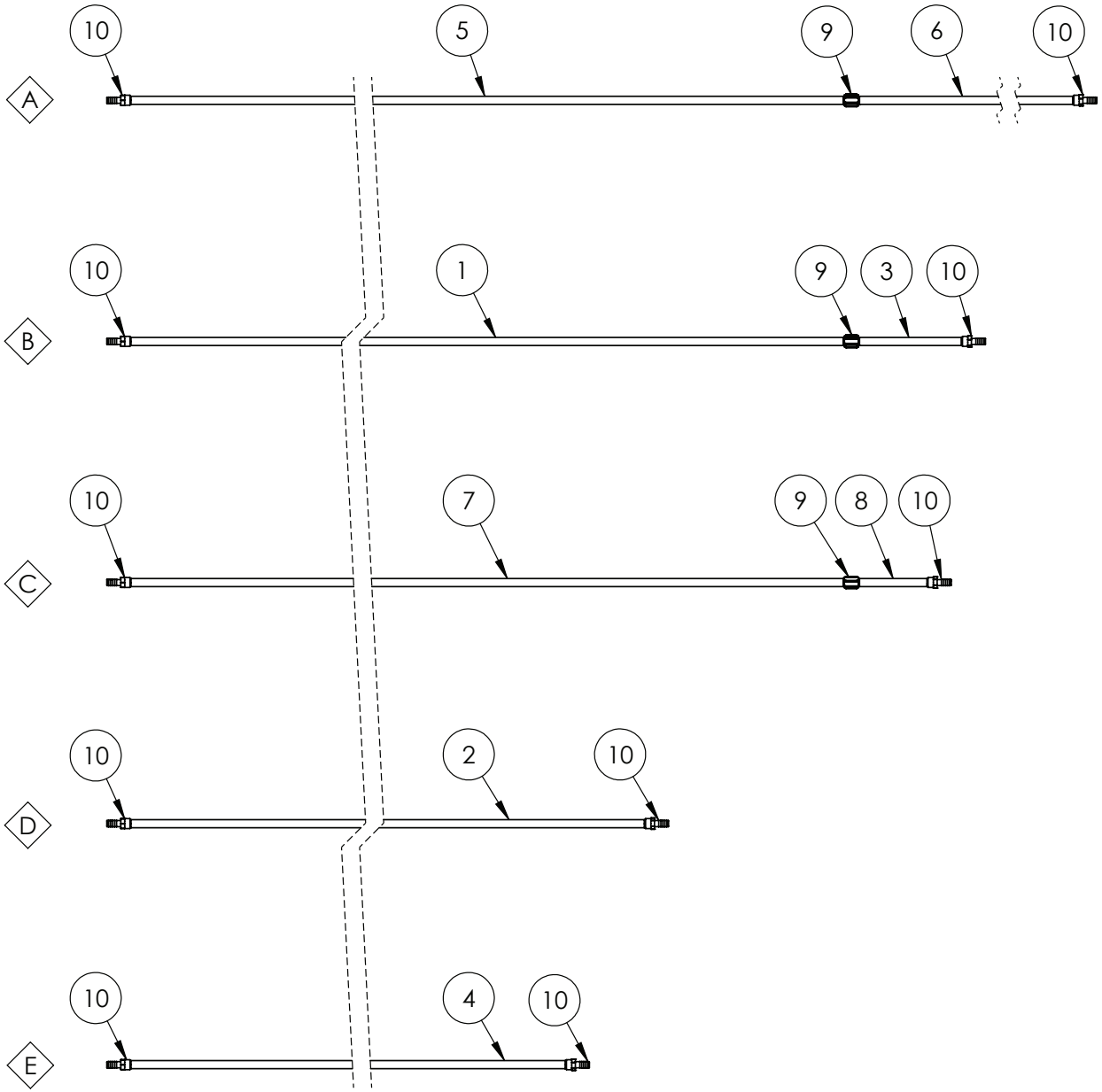

ITEM	PART NUMBER	DESCRIPTION	QTY
A	-	BOOM POLY ASSEMBLY, 42M, INNER SECTION, BOOM RECIRCULATION, RIVX	-
B	-	BOOM POLY ASSEMBLY, 36M, INNER SECTION, BOOM RECIRCULATION,RIVX	-
C	-	BOOM POLY ASSEMBLY, 42M, OUTER SECTION, BOOM RECIRCULATION, RIVX	-
D	-	BOOM POLY ASSEMBLY, 36MT, INNER SECTION, BOOM RECIRCULATION, RIXV	-
E	-	BOOM POLY ASSEMBLY, 36M, OUTER SECTION, BOOM RECIRCULATION, RIVX	-

IF DESCRIPTION PREFIX IS ASSEMBLY DRAWING ONLY OR PRODUCTION DRAWING ONLY THE ITEM IS NOT FOR SALE

ITEM	PART NUMBER	DESCRIPTION	QTY
1	GA4950645	BOOM POLY, 1" 36M, INNER SECTION A, BOOM RECIRCULATION, TRITECH S	1
2	GA4909545	BOOM POLY, 1" 36M, INNER SECTION DUAL, BOOM RECIRCULATION, TRITECH S	1
3	GA4950650	BOOM POLY, 1" 36m, INNER SECTION B, BOOM RECIRCULATION, TRITECH S	1
4	GA4950655	BOOM POLY, 1" 36m, OUTER SECTION, BOOM RECIRCULATION, TRITECH	1
5	GA4950660	BOOM POLY, 1" 42m, INNER SECTION A, BOOM RECIRCULATION, TRITECH S	1
6	GA4950665	BOOM POLY, 1" 42m, INNER SECTION B, BOOM RECIRCULATION, TRITECH S	1
7	GA4950670	BOOM POLY, 1" 42m, OUTER SECTION A, BOOM RECIRCULATION, TRITECH S	1
8	GA4950675	BOOM POLY, 1" 42m, OUTER SECTION B, BOOM RECIRCULATION, TRITECH S	1
9	GA5077638	COUPLING, SOCKET, 1 FEMALE THREAD, BANJO, CPLG100	3
10	GA5077747	HOSE BARB, STRAIGHT, 1 FEMALE THREAD X 1 HOSE, BANJO, HBF100	10
GA7800495 GOLDACRES		BOOM POLY ASSEMBLY, RECIRCULATION, 36MT-42MT, RIVX	REV 00

09 - Decals

Decal Kit, Base, G8 Crop Cruiser, Series 3, GA8702384 (Continue Over Page)

Decal Kit, Base, G8 Crop Cruiser, Series 3, GA8702384 (Continue Over Page)

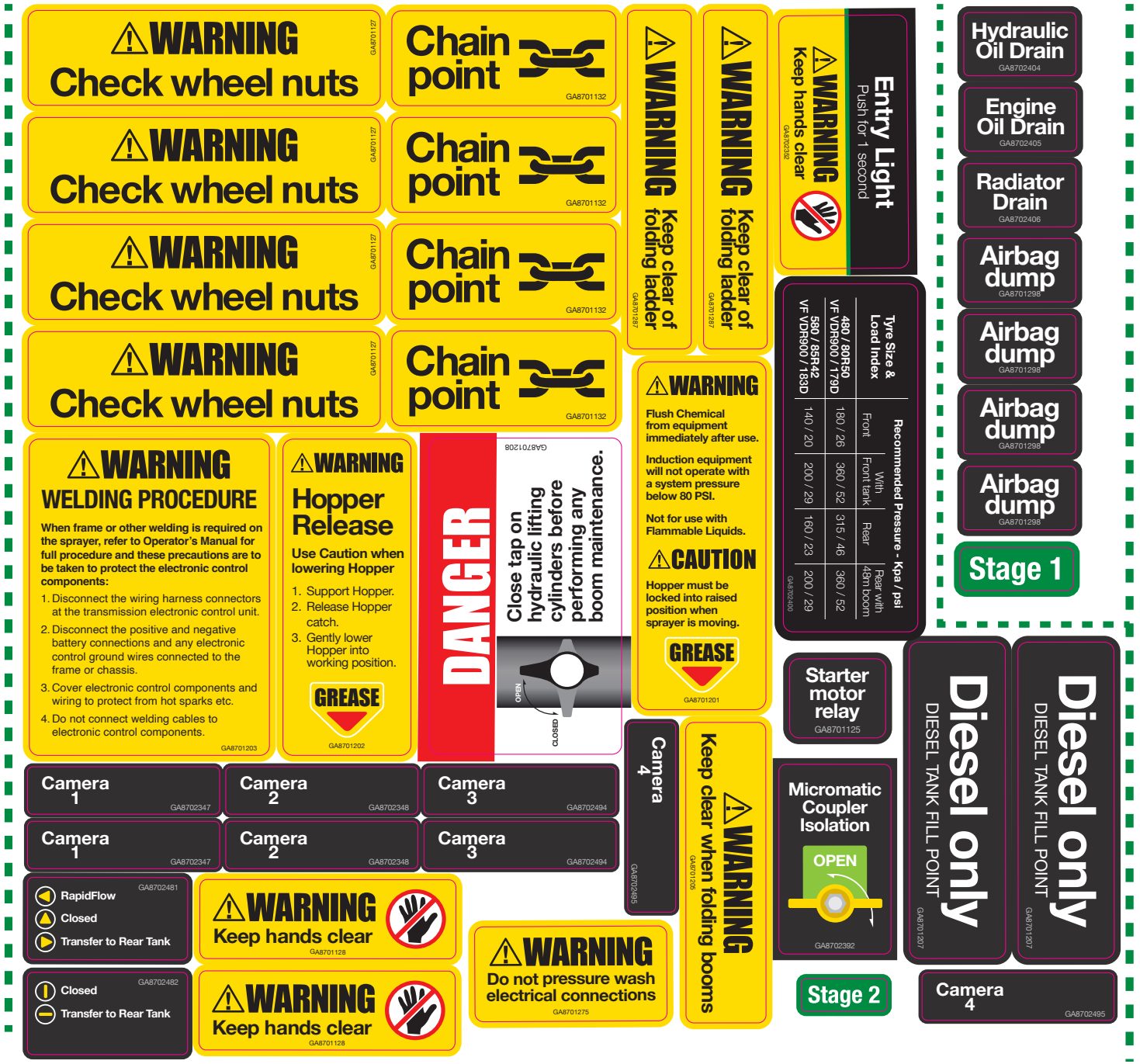

Decal Kit, Base, G8 Crop Cruiser, Series 3, GA8702384 (Continue Over Page)



Decal Kit, Booms, G8 Crop Cruiser, Series 3, GA8702385

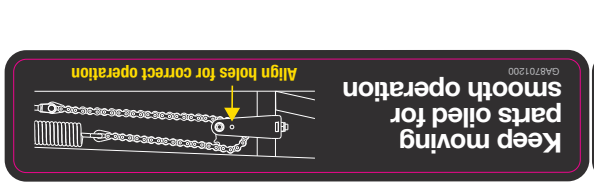











Decal Kit, Centre Section, G8 Crop Cruiser, Series 3, GA8702386

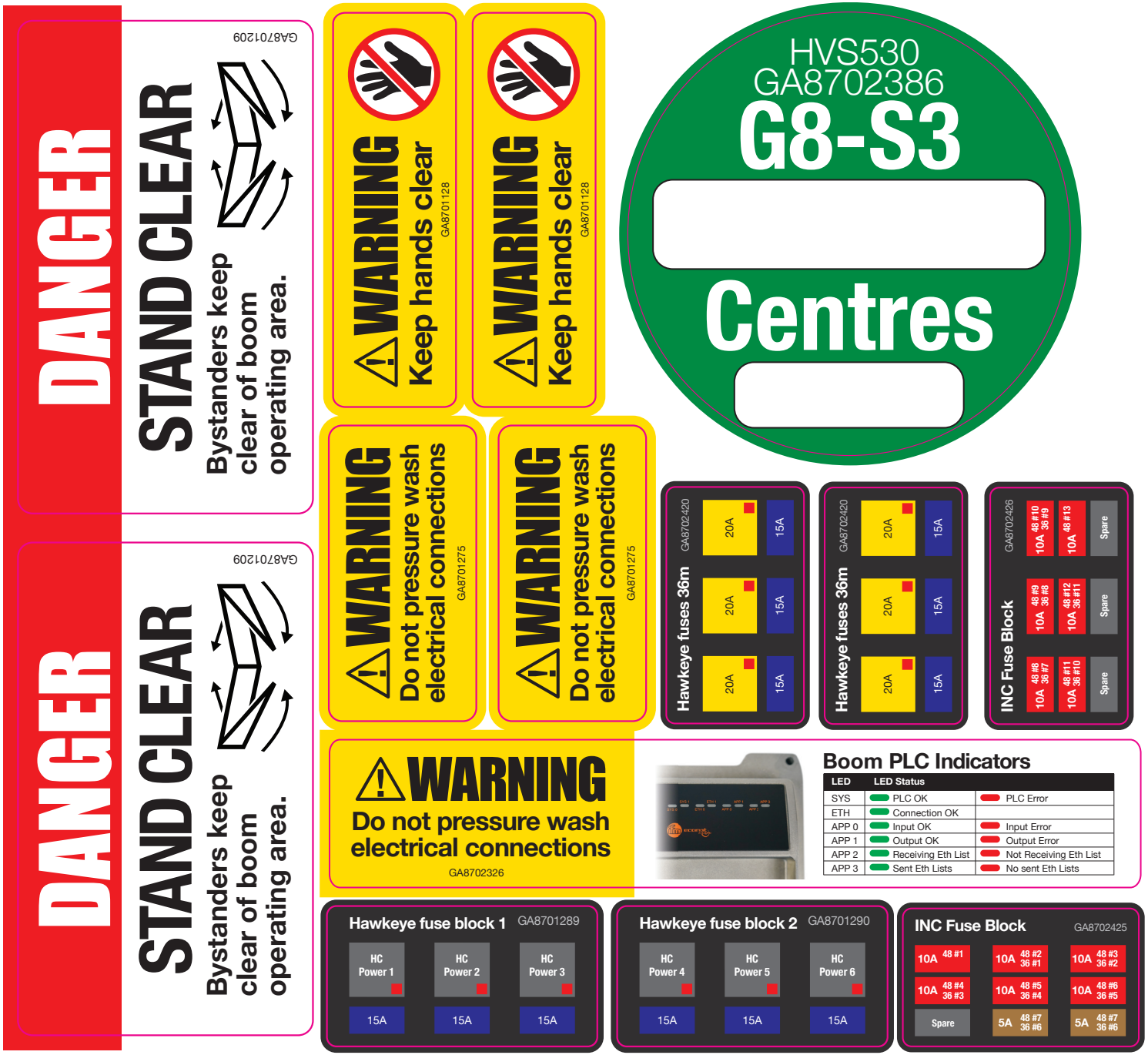

Decal Kit, Fill Station, G8 Crop Cruiser, Series 3, GA8702387

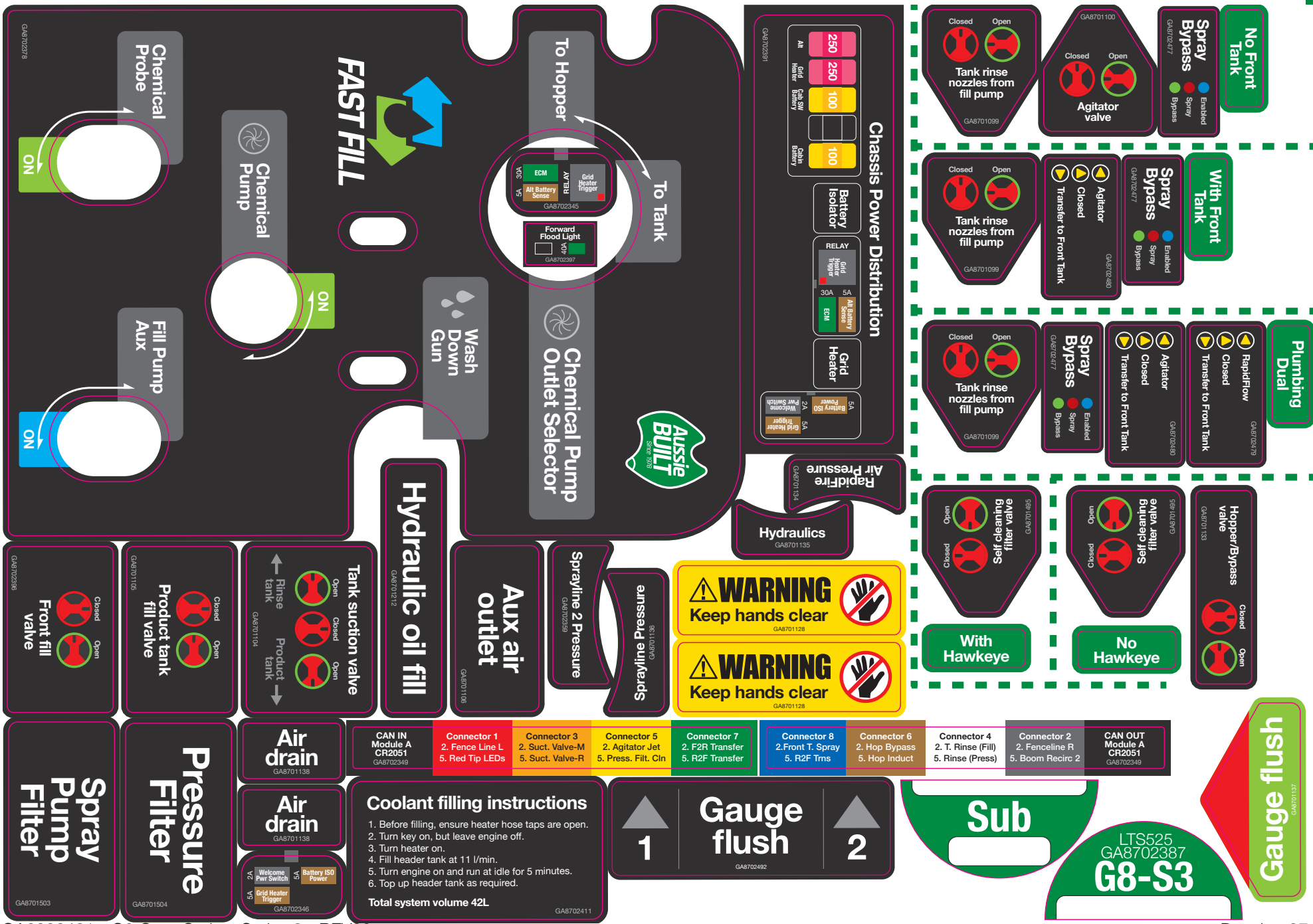

10 - Electrical

Electrical Power Distribution Assembly

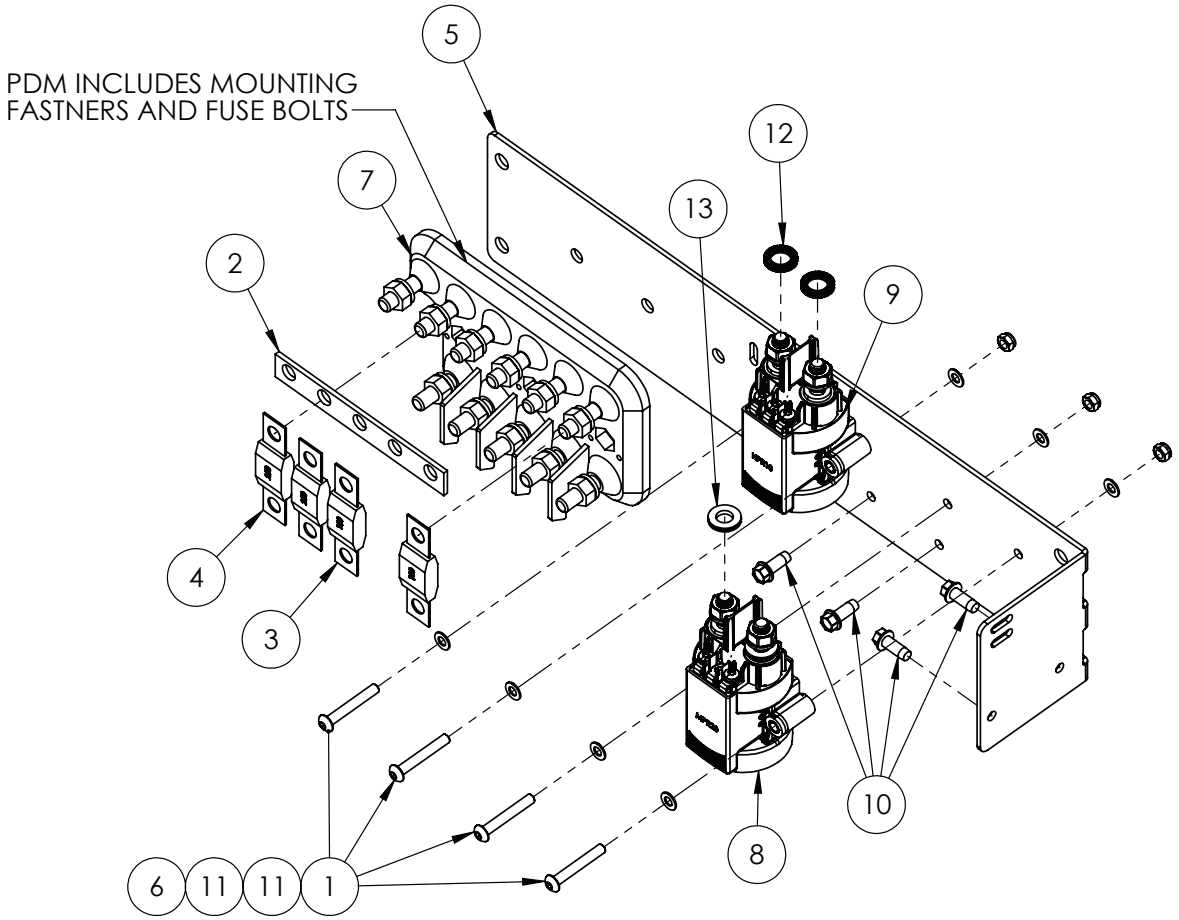

IF DESCRIPTION PREFIX IS ASSEMBLY DRAWING ONLY OR PRODUCTION DRAWING ONLY THE ITEM IS NOT FOR SALE			
ITEM	PART NUMBER	DESCRIPTION	QTY
1	GA0500142	BHCS M5 X 35 SS A2-70	4
2	GA3001127	ELECTRICAL BUS BAR, 5 POS, 25mm, M8	1
3	GA3001242	FUSE, 100A, YELLOW, AMG100	2
4	GA3001246	FUSE, 250A, PINK, AMG250	2
5	GA4000365	MOUNTING PLATE, HEAVY ELECTRICAL, FWD OIL TANK, S3	1
6	GA5003974	NUT M5 NYLOC ZP	4
7	GA3001117	POWER DISTRIBUTION MODULE, 5 POLE, AMG / MEGA FUSE, LMG5-1-001	1
8	GA3001125	RELAY, MONOSTABLE. 300A, M10, MPR SERIES	1
9	GA3001124	RELAY, SMART, 300A, M10, DELAY OFF 15MIN, HPR SERIES	1
10	GA0500022	SET SCREW SELF TAPPING TRILOBE M6 X 16 ZP	4
11	GA5003983	WASHER M5 FLAT SS	8
12	GA5025270	WASHER, 10mm, NORD LOCKING, LOD	2
13	GA5025275	WASHER, 8mm, NORD LOCKING, LOD	2
GA4909530 GOLDACRES		ELECTRICAL POWER DISTRUBUTION, ASSEMBLY, FWD OIL COOLER S3	REV 02

Light Bar, Bonnet

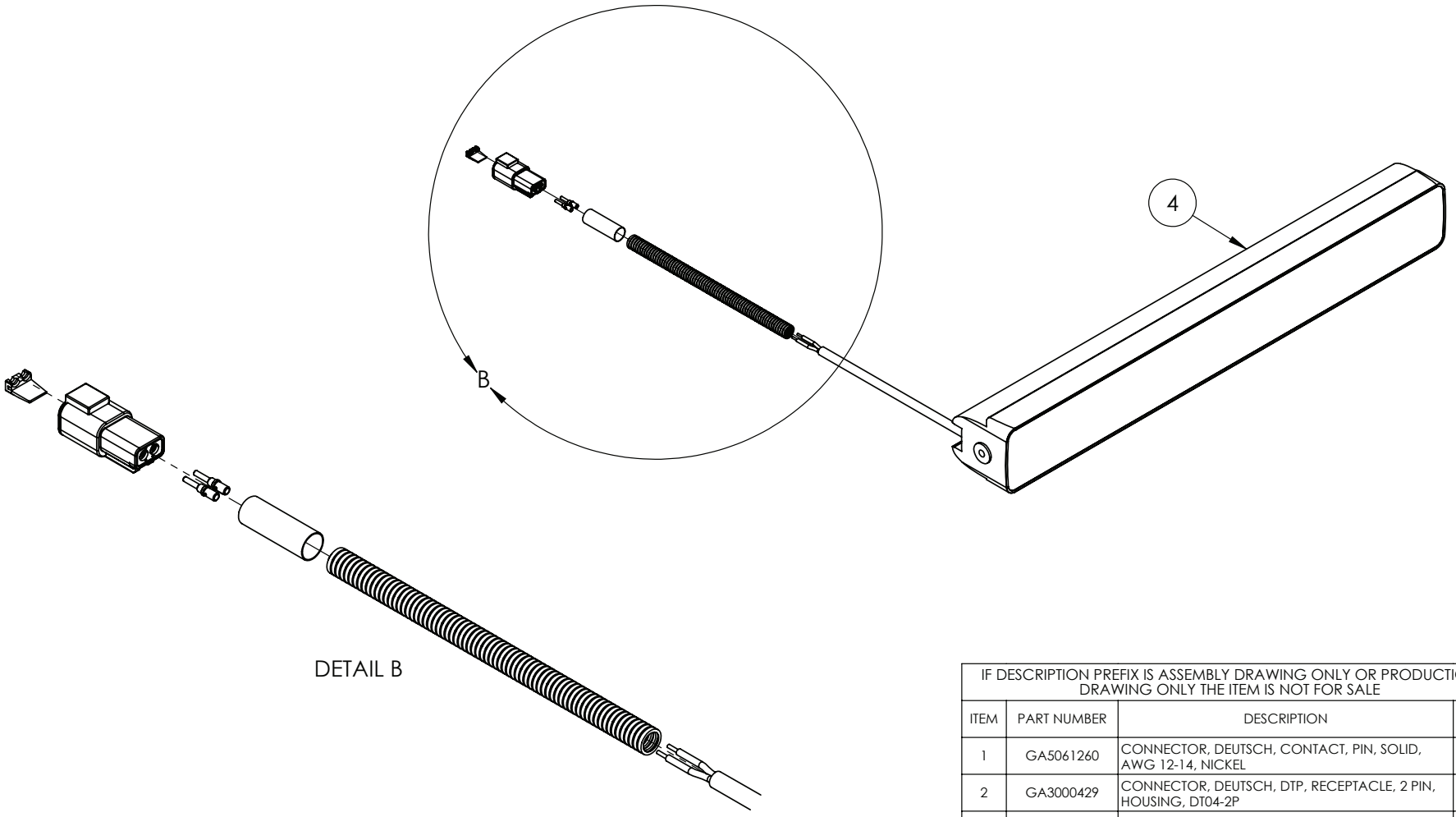

IF DESCRIPTION PREFIX IS ASSEMBLY DRAWING ONLY OR PRODUCTION DRAWING ONLY THE ITEM IS NOT FOR SALE			
ITEM	PART NUMBER	DESCRIPTION	QTY
1	GA5061260	CONNECTOR, DEUTSCH, CONTACT, PIN, SOLID, AWG 12-14, NICKEL	2
2	GA3000429	CONNECTOR, DEUTSCH, DTP, RECEPTACLE, 2 PIN, HOUSING, DT04-2P	1
3	GA5012283	ELECTRICAL TAPE[C]	1
4	GA5026071	LIGHT BAR, DOUBLE ROW, 21.5 IN, HELLA BLACK MAGIC	1
5	GA5012149	SPLIT TUBING, 10mm, NARVA	1
6	GA3000430	WEDGE LOCK, DEUTSCH, POWER TO SUIT DTP04-2P	1
GA7800370 GOLDACRES		LIGHT BAR, DOUBLE ROW, 21.5 IN, HELLA BLACK MAGIC, WITH CONNECTOR	REV 00.B

Light, LED, Flood, Ultra Beam S Series

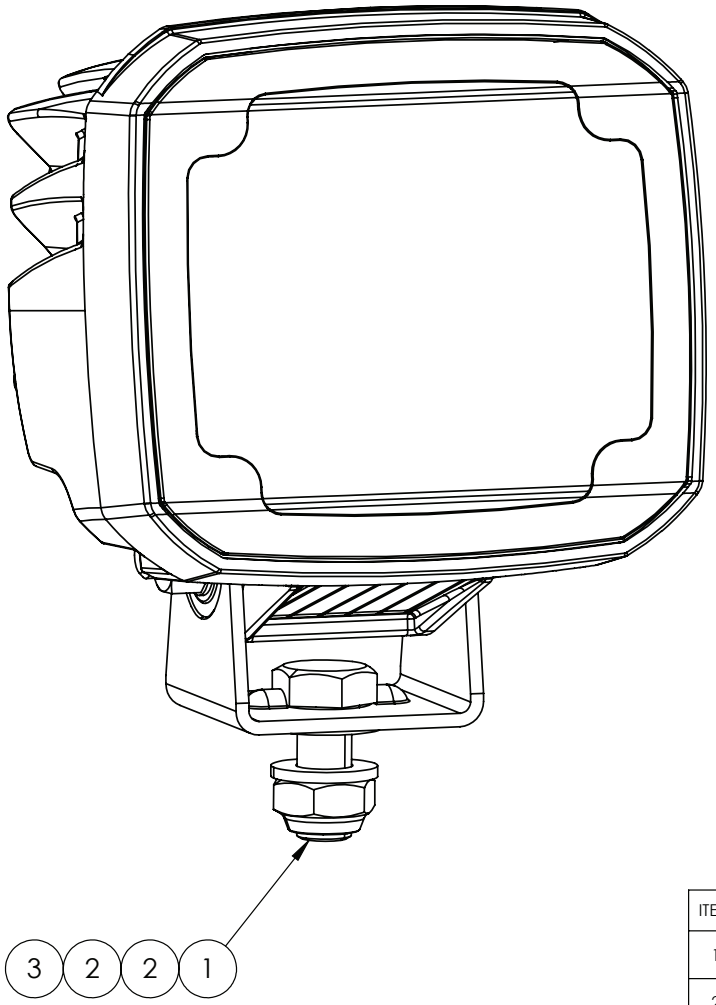

ITEM	PART NUMBER	DESCRIPTION	QTY
1	GA5006145	SET SCREW M10 X 30 SS A2-70	1
2	GA5000117	WASHER M10 FLAT SS HD	2
3	GA5051445	NUT M10 NYLOC SS	1
GA3001337 GOLDACRES		LIGHT, LED, FLOOD, ULTRA BEAM S SERIES, HELLA, 1GA 995 706-001	REV 00

Light, LED, Spot, Ultra Beam S Series

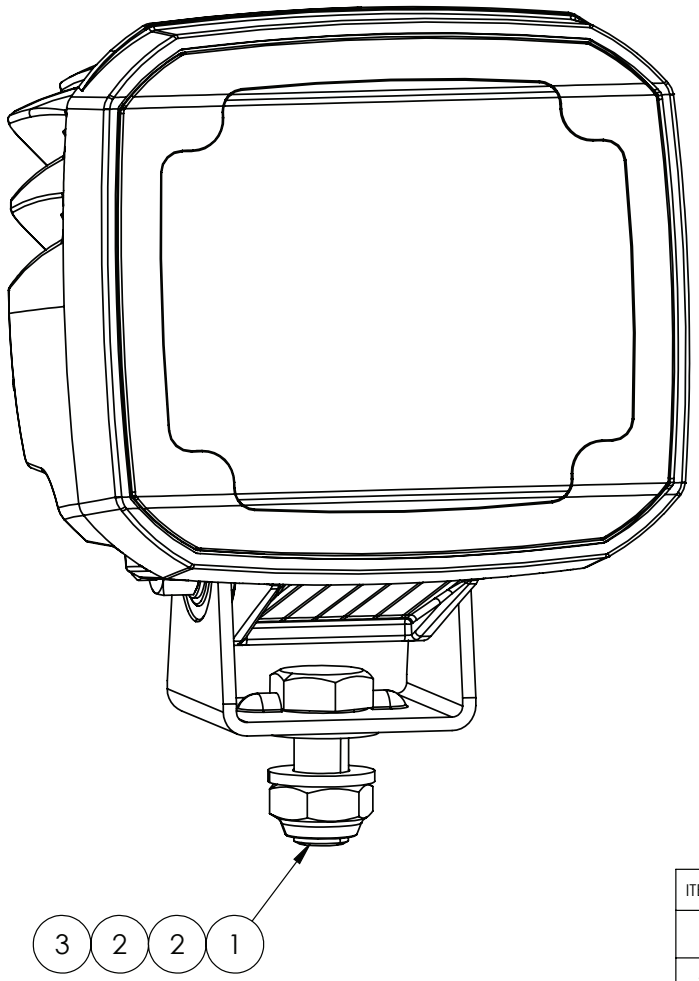

ITEM	PART NUMBER	DESCRIPTION	QTY
1	GA5006145	SET SCREW M10 X 30 SS A2-70	1
2	GA5000117	WASHER M10 FLAT SS HD	2
3	GA5051445	NUT M10 NYLOC SS	1
GA3001338 GOLDACRES		LIGHT, LED, SPOT, ULTRA BEAM S SERIES, HELLA, 1GA 995 706-011	REV

Light, LED, Red Beam Light, Tip Indicator

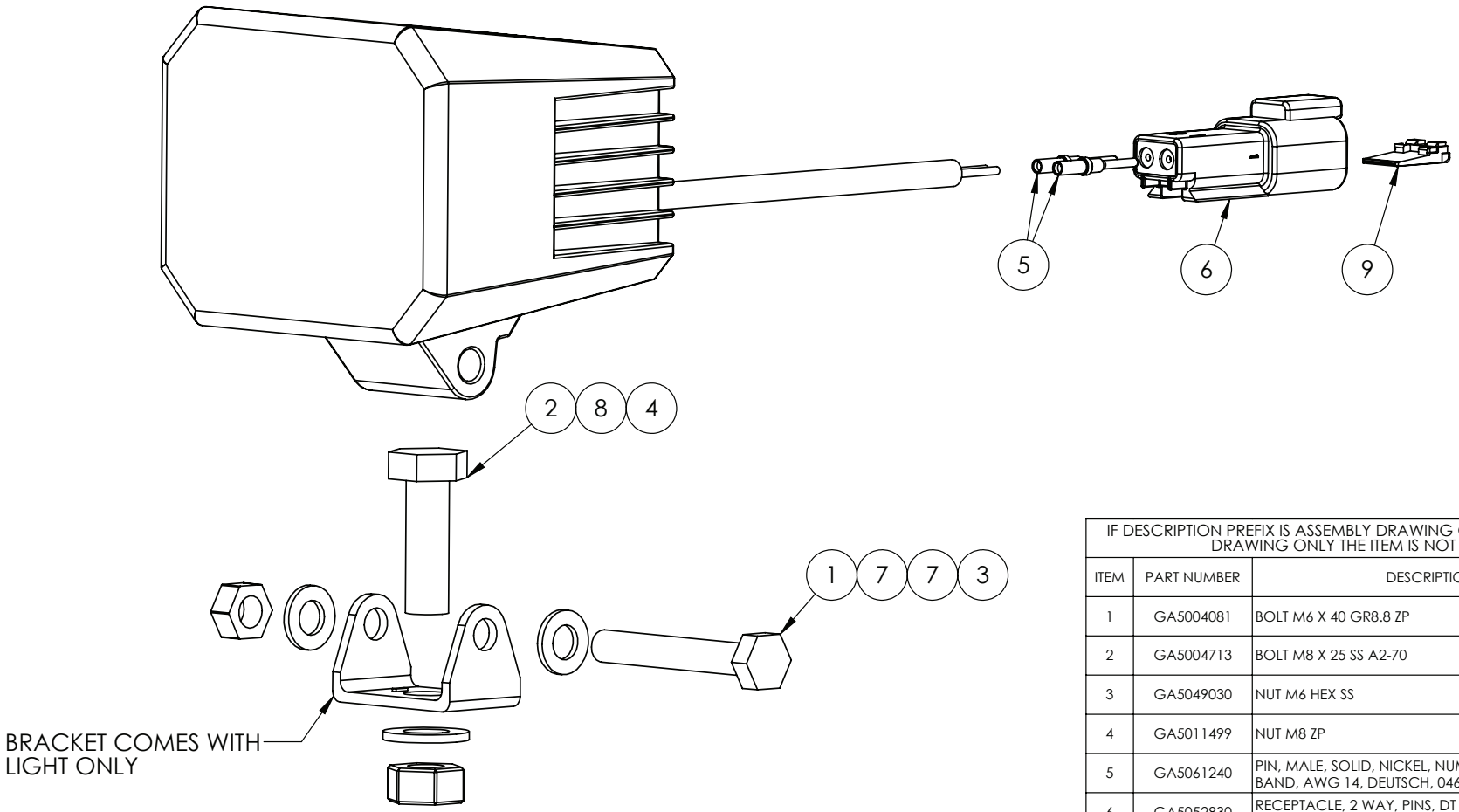

IF DESCRIPTION PREFIX IS ASSEMBLY DRAWING ONLY OR PRODUCTION DRAWING ONLY THE ITEM IS NOT FOR SALE			
ITEM	PART NUMBER	DESCRIPTION	QTY
1	GA5004081	BOLT M6 X 40 GR8.8 ZP	1
2	GA5004713	BOLT M8 X 25 SS A2-70	1
3	GA5049030	NUT M6 HEX SS	1
4	GA5011499	NUT M8 ZP	1
5	GA5061240	PIN, MALE, SOLID, NICKEL, NUMBER 16, GREEN BAND, AWG 14, DEUTSCH, 0460-215-16141	2
6	GA5052830	RECEPTACLE, 2 WAY, PINS, DT SERIES, DEUTSCH, DT04-2P	1
7	GA5004437	WASHER 6mm FLAT SS	2
8	GA5003651	WASHER 8mm FLAT SS	1
9	GA5052835	WEDGE LOCK, 2 WAY, DT SERIES, DEUTSCH	1
GA3001119 GOLDACRES		LIGHT, LED, RED BEAM LINE, TIP INDICATOR WITH DEUTSCH CONNECTOR	REV 01.C

Beacon, LED

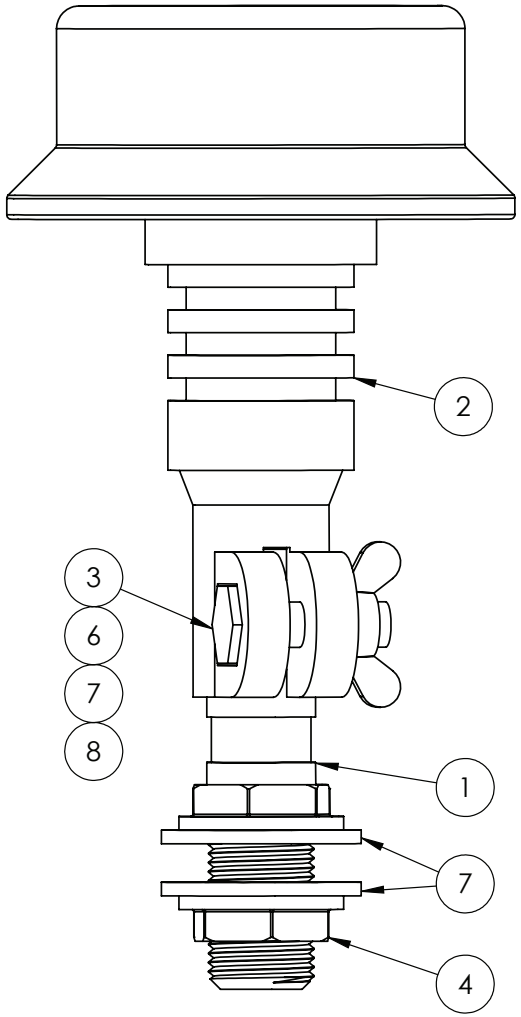

IF DESCRIPTION PREFIX IS ASSEMBLY DRAWING ONLY OR PRODUCTION DRAWING ONLY THE ITEM IS NOT FOR SALE			
ITEM	PART NUMBER	DESCRIPTION	QTY
1	GA5020411	BEACON MOUNT SCREW ON	1
2	GA5048976	BEACON, LED, AMBER, DIN A POLE MOUNT, FLEXIBLE	1
3	GA5006071	BOLT M10 X 40 GR10.9 ZP	1
4	NUT	NUT SUPPLIED WITH BEACON POST	2
5	GA5000127	NUT M10 WING NUT ZP	1
6	GA5000137	WASHER 10mm SPRING SS	1
7	GA5001891	WASHER 24mm FLAT HD SS	2
8	GA5000117	WASHER M10 FLAT SS HD	1
GA7800248 GOLDACRES		ASSEMBLY DRAWING ONLY, BEACON, LED, AMBER WITH INSERT SCREW	REV

Tail Light Assembly, LH, LED

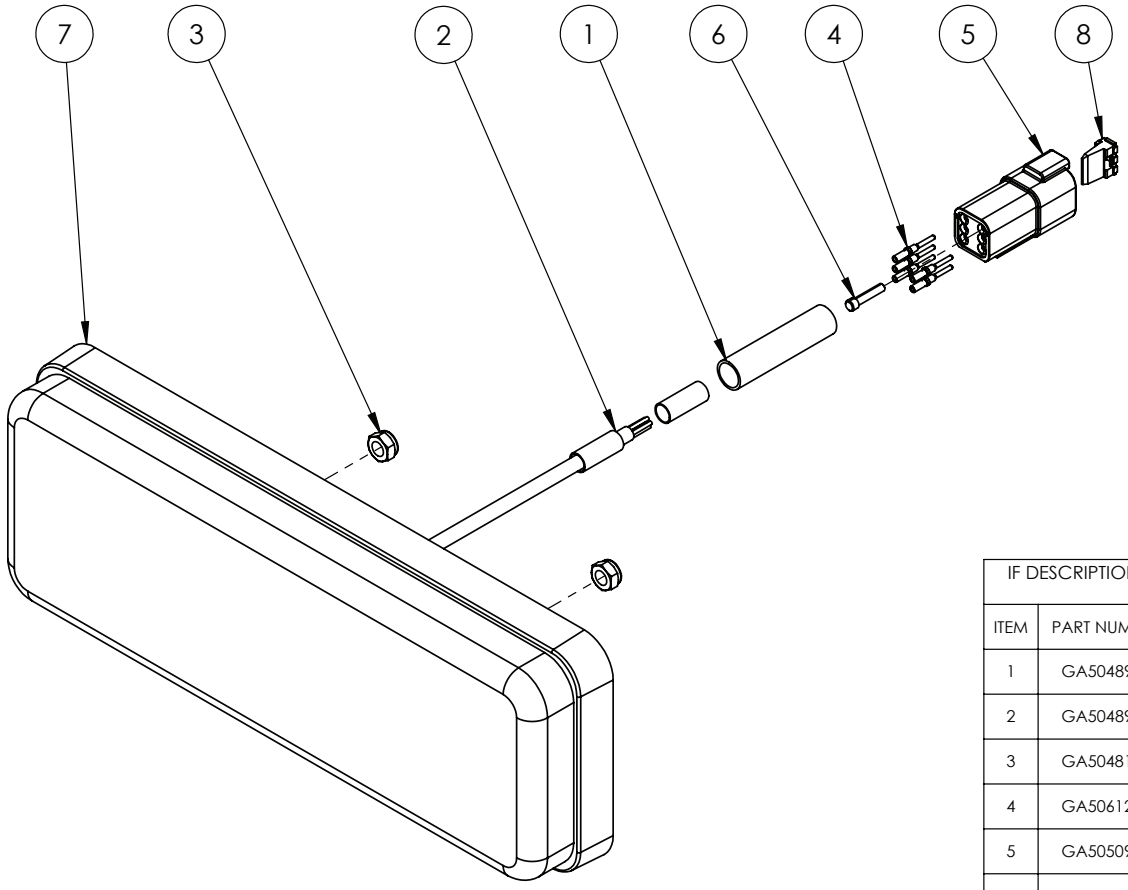

IF DESCRIPTION PREFIX IS ASSEMBLY DRAWING ONLY OR PRODUCTION DRAWING ONLY THE ITEM IS NOT FOR SALE			
ITEM	PART NUMBER	DESCRIPTION	QTY
1	GA5048957	HEAT SHRINK, 24 - 8mm, BLACK, GLUED, CUT 50mm	1
2	GA5048956	HEAT SHRINK, 9-3mm, BLACK, GLUED, CUT 20mm	2
3	GA5048115	NUT M6 NYLOC ZP	2
4	GA5061240	PIN, MALE, SOLID, NICKEL, NUMBER 16, GREEN BAND, AWG 14, DEUTSCH, 0460-215-16141	5
5	GA5050970	RECEPTACLE, 6 WAY PIN, DT SERIES, DT04-6P, DEUTSCH	1
6	GA5052840	SEALING PLUG, BLANKING PIN, WHITE, SIZE 12 - 16, DEUTSCH	1
7	GA3001102	TAIL LIGHT, LED, LHS, COMBINATION WITH SEQUENTIAL INDICATOR, 284ARWMLB	1
8	GA5050975	WEDGE LOCK, 6 PIN SUIT DEUTSCH, DT04-6P	1
GA3001122 GOLDACRES		TAIL LIGHT, LED, LHS, COMBINATION WITH SEQUENTIAL INDICATOR, WITH DEUTSCH CONNECTOR	REV 01.F

Tail Light Assembly, RH, LED

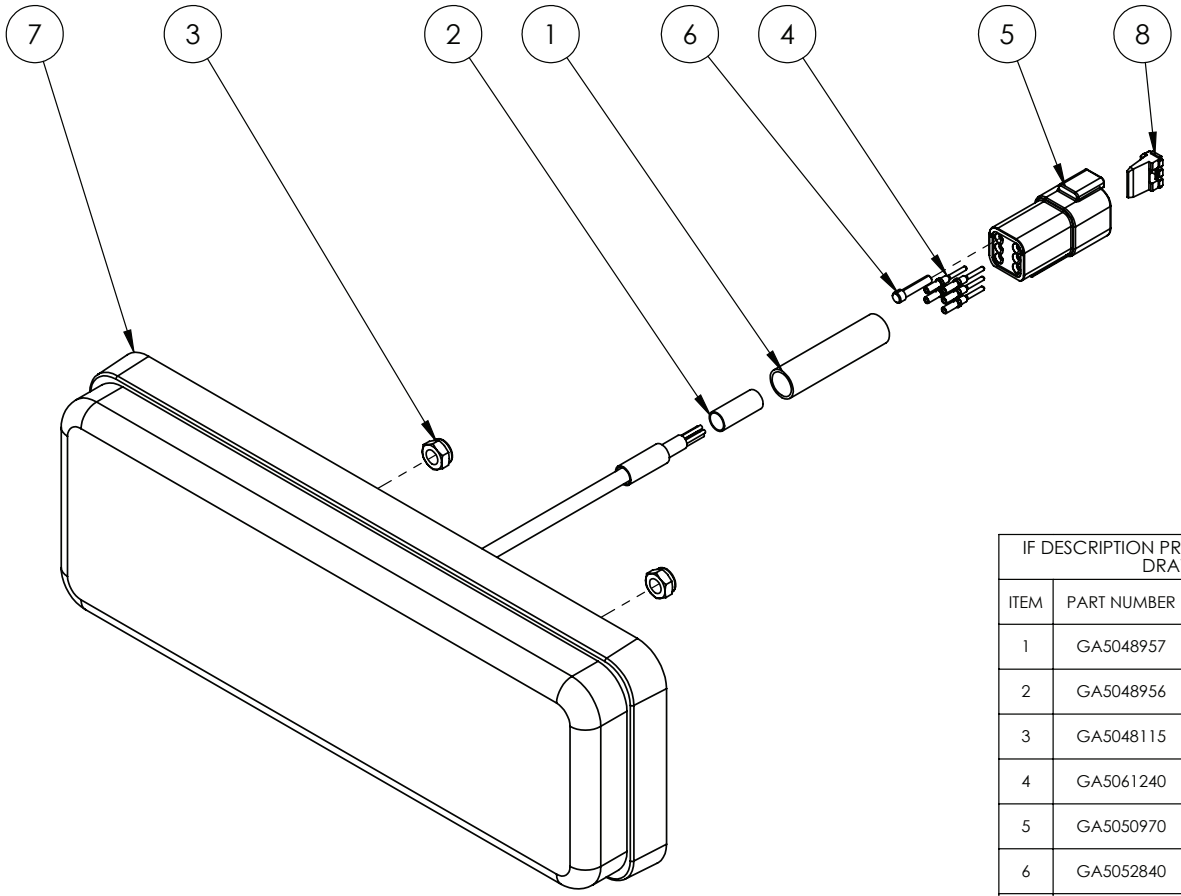

IF DESCRIPTION PREFIX IS ASSEMBLY DRAWING ONLY OR PRODUCTION DRAWING ONLY THE ITEM IS NOT FOR SALE			
ITEM	PART NUMBER	DESCRIPTION	QTY
1	GA5048957	HEAT SHRINK, 24 - 8mm, BLACK, GLUED, CUT 50mm	1
2	GA5048956	HEAT SHRINK, 9-3mm, BLACK, GLUED, CUT 20mm	2
3	GA5048115	NUT M6 NYLOC ZP	2
4	GA5061240	PIN, MALE, SOLID, NICKEL, NUMBER 16, GREEN BAND, AWG 14, DEUTSCH, 0460-215-16141	5
5	GA5050970	RECEPTACLE, 6 WAY PIN, DT SERIES, DT04-6P, DEUTSCH	1
6	GA5052840	SEALING PLUG, BLANKING PIN, WHITE, SIZE 12 - 16, DEUTSCH	1
7	GA3001103	TAIL LIGHT, LED, RHS, COMBINATION WITH SEQUENTIAL INDICATOR, 284ARWMRB	1
8	GA5050975	WEDGE LOCK, 6 PIN SUIT DEUTSCH, DT04-6P	1
GA3001123 GOLDACRES		TAIL LIGHT, LED, RHS, COMBINATION WITH SEQUENTIAL INDICATOR, WITH DEUTSCH CONNECTOR	REV 01.F

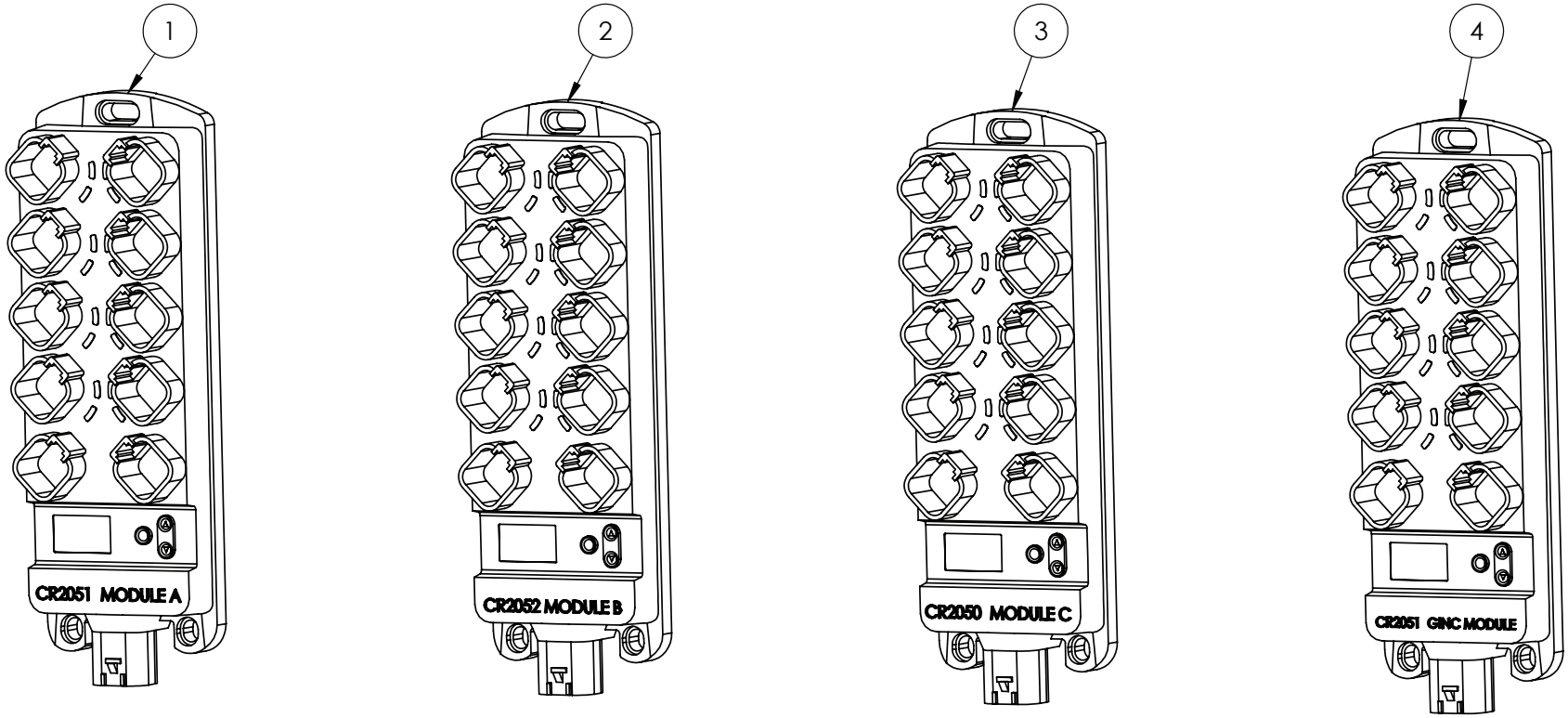

IF DESCRIPTION PREFIX IS ASSEMBLY DRAWING ONLY OR PRODUCTION DRAWING ONLY THE ITEM IS NOT FOR SALE			
ITEM	PART NUMBER	DESCRIPTION	QTY
1	GA3000309	I/O MODULE, 16 OUTPUT CHANNELS, CR2051, IFM, MODULE A	1
2	GA3000310	I/O MODULE, 8 OUTPUT CHANNELS, 8 INPUT CHANNELS, CR2052, IFM, MODULE B	1
3	GA3001133	I/O MODULE, 16 INPUT CHANNELS, CR2050, IFM, MODULE C	1
4	GA3001389	IO MODULE, 16 OUTPUT, SUIT GINC SYSTEM, IFM CR2051	1
GA7800509 GOLDACRES		PARTS DRAWING ONLY, I/O MODULES, IFM	REV

Keypad, CAN, 8 Button

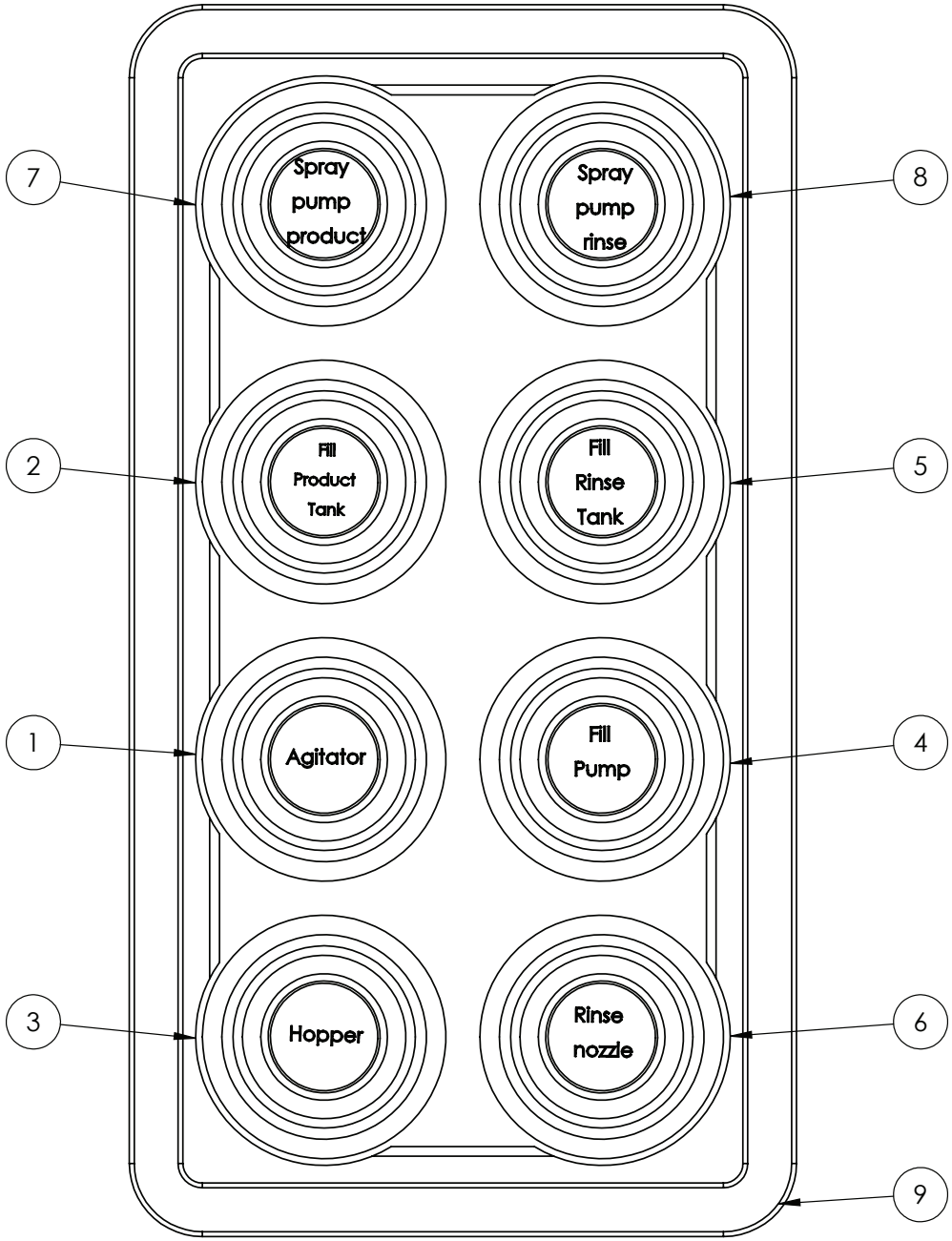

IF DESCRIPTION PREFIX IS ASSEMBLY DRAWING ONLY OR PRODUCTION DRAWING ONLY THE ITEM IS NOT FOR SALE			
ITEM	PART NUMBER	DESCRIPTION	QTY
1	GA3000442	KEYPAD SWITCH INSERT, AGITATOR, LASER ETCHED, G6 MY20	1
2	GA3000441	KEYPAD SWITCH INSERT, FILL PRODUCT TANK, LASER ETCHED, G6 MY20	1
3	GA3000443	KEYPAD SWITCH INSERT, HOPPER, LASER ETCHED, G6 MY20	1
4	GA3000438	KEYPAD SWITCH INSERT, FILL PUMP, LASER ETCHED, G6 MY20	1
5	GA3000437	KEYPAD SWITCH INSERT, FILL RINSE TANK, LASER ETCHED, G6 MY20	1
6	GA3000439	KEYPAD SWITCH INSERT, RINSE NOZZLE, LASER ETCHED, G6 MY20	1
7	GA3000440	KEYPAD SWITCH INSERT, SPRAY PUMP PRODUCT, LASER ETCHED, G6 MY20	1
8	GA3000436	KEYPAD SWITCH INSERT, SPRAY PUMP RINSE, LASER ETCHED, G6 MY20	1
9	GA3000431	KEYPAD, CAN, 8 BUTTON CANOPEN, DEUTSCH 4 PIN CONNECTOR, EXTERNAL, G6 MY20	1
GA4950010 GOLDACRES		CAN KEYPAD ASSEMBLY SUIT MY20 G6 POD	REV 01

ISO, Electrical Connectors

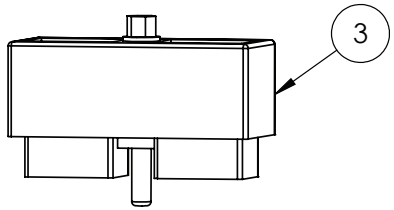

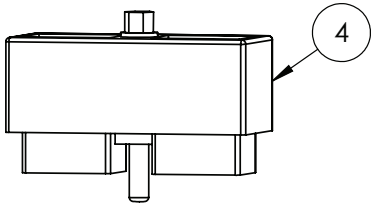

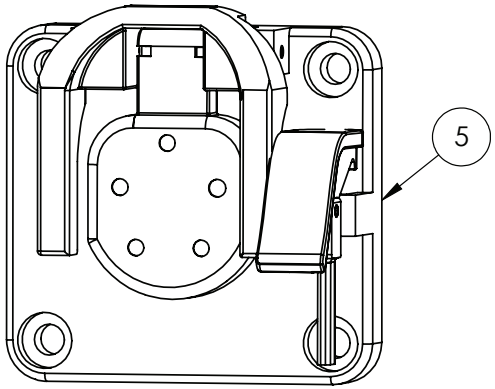

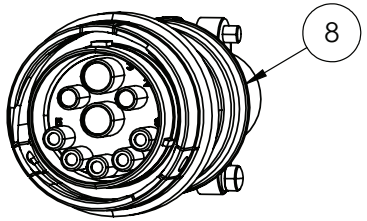

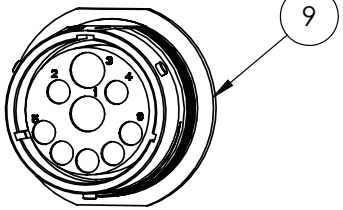

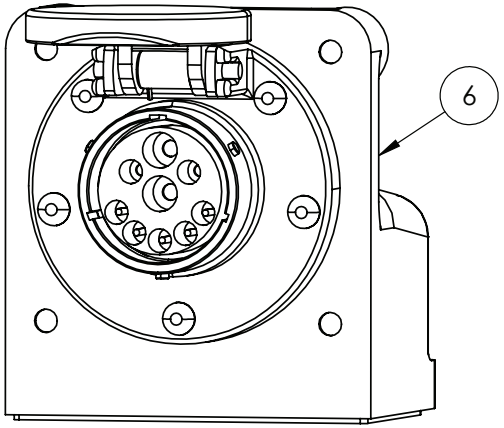

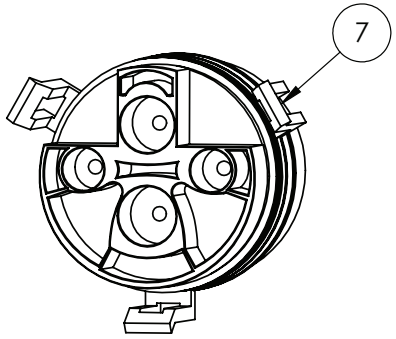

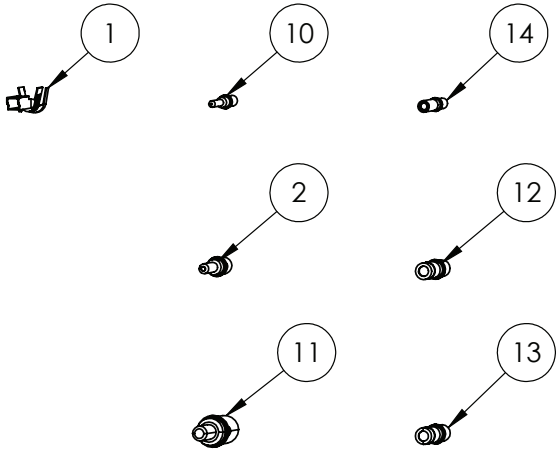

IF DESCRIPTION PREFIX IS ASSEMBLY DRAWING ONLY OR PRODUCTION DRAWING ONLY THE ITEM IS NOT FOR SALE			
ITEM	PART NUMBER	DESCRIPTION	QTY
1	GA5061370	CINCH TERMINAL FEMALE 16-18AWG, 425-00-00-873	1
2	GA5061260	CONNECTOR, DEUTSCH, CONTACT, PIN, SOLID, AWG 12-14, NICKEL	1
3	GA3001152	ELECTRICAL CONNECTOR, CINCH, 30 WAY, A-K, SUIT PC1 ISO NODE, 581-01-30-029	1
4	GA3001153	ELECTRICAL CONNECTOR, CINCH, 30 WAY, L-Y, SUIT PC1 ISO NODE, 581-01-30-028	1
5	GA3000872	ELECTRICAL CONNECTOR, ISO BUS, 11783-2, 9 PIN, BOX, IBBC BREAKAWAY 408-4002-131	1
6	GA3000874	ELECTRICAL CONNECTOR, ISO BUS, 11783-2, 9 PIN, BOX, JD STYLE, IBBC HDBOX-24-91PN	1
7	GA3000873	ELECTRICAL CONNECTOR, ISO BUS, 4P PLUG IBRC SUIT GA3000872, 408-4002-132	1
8	GA3000870	ELECTRICAL CONNECTOR, ISO BUS, 9 PIN, HDB36-24-91SE-059	1
9	GA3000875	ELECTRICAL CONNECTOR, ISO BUS, 9 PIN, CABLE MOUNT HD34-24-91PN	1
10	GA5061220	PIN, MALE, GOLD, NUMBER 16, DEUTSCH	1
11	GA3000876	PIN, MALE, SOLID, NICKEL, NUMBER 8, DEUTSCH, 0460-204-08141	1
12	GA3000877	SOCKET, FEMALE, SOLID, NICKEL, NUMBER 12, DEUTSCH	1
13	GA3000877	SOCKET, FEMALE, SOLID, NICKEL, NUMBER 8, DEUTSCH, 0462-203-08141	1
14	GA5061225	SOCKET, FEMALE, SOLID GOLD, NUMBER 16, DEUTSCH	1
GA7800082 GOLDACRES		ELECTRICAL CONNECTORS, ISO BUS, DEUTSCH + RAVEN	REV 00

Raven, RCM & XRT Plugs

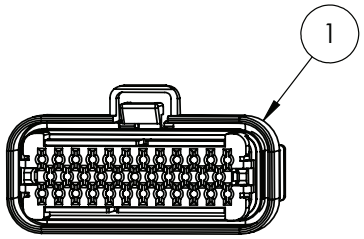

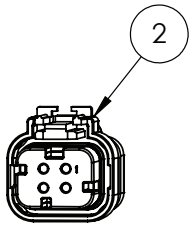

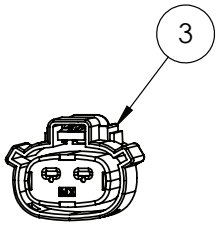

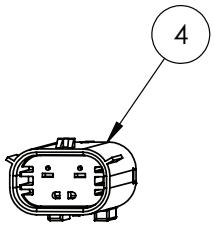

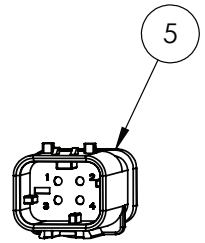

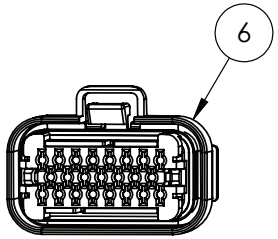

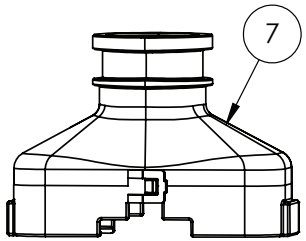

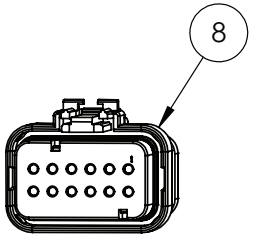

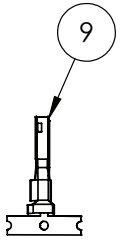



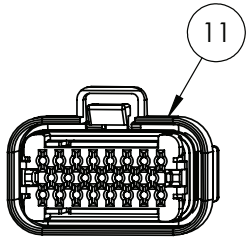

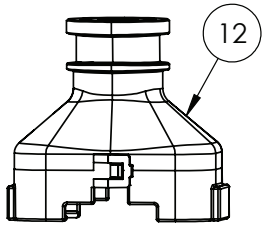

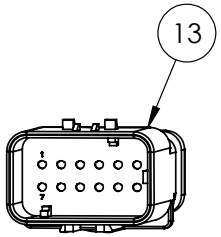

IF DESCRIPTION PREFIX IS ASSEMBLY DRAWING ONLY OR PRODUCTION DRAWING ONLY THE ITEM IS NOT FOR SALE			
ITEM	PART NUMBER	DESCRIPTION	QTY
1	GA3001135	ELECTRICAL CONNECTOR, 35 PIN PLUG, BLACK, AMPSEAL, 776164-1	1
2	GA3000839	ELECTRICAL CONNECTOR, 4 SOCKET, RED PLUG, 18-14 AWG, AMPSEAL 16, 776524-1	1
3	GA3001141	ELECTRICAL CONNECTOR, 2 PIN RECEPTACLE, MOLEX 19432-0013, SUIT 19434-0003 SOCKETS	1
4	GA3001142	ELECTRICAL CONNECTOR, 2 PIN PLUG, MOLEX 19433-0013, SUIT 19431-0001 PINS	1
5	GA3000840	ELECTRICAL CONNECTOR, 4 PIN, RED INTERNAL RECEPTACLE, 18-14 AWG, AMPSEAL 16, 776488-1	1
6	GA3001136	ELECTRICAL CONNECTOR, 23 PIN PLUG, BLACK, AMPSEAL, 770680-1	1
7	GA3001417	ELECTRICAL CONNECTOR, BACKSHELL, AMPSEAL, 35 POSITION, 2389807-1, 2 PER CONNECTOR	1
8	GA3001140	ELECTRICAL CONNECTOR, 12 PIN PLUG, AMPSEAL 16, SUIT DEUTSCH 16 SOCKETS, 776437-1	1
9	GA3001143	ELECTRICAL TERMINAL CONNECTOR, FEMALE, MX150L, MOLEX, 19434-0003	1
10	GA3001138	ELECTRICAL CONTACT, AMPSEAL GOLD SOCKET, 16-20 AWG, LOOSE PIECE, 770854-3	1
11	GA3001137	ELECTRICAL CONNECTOR, 23 PIN PLUG, GREY, AMPSEAL, 770680-4	1
12	GA3001416	ELECTRICAL CONNECTOR, BACKSHELL, AMPSEAL, 23 POSITION, 2389806-1, 2 PER CONNECTOR	1
13	GA3001139	ELECTRICAL CONNECTOR, 12 PIN RECEPTACLE, AMPSEAL 16, SUIT DEUTSCH 16 PINS, 776438-1	1
GA7800256 GOLDACRES		ELECTRICAL CONNECTORS, RAVEN HARNESS, AMPSEAL, MOLEX, PARTS DRAWING	REV 00.D

Raven, AMP Plugs

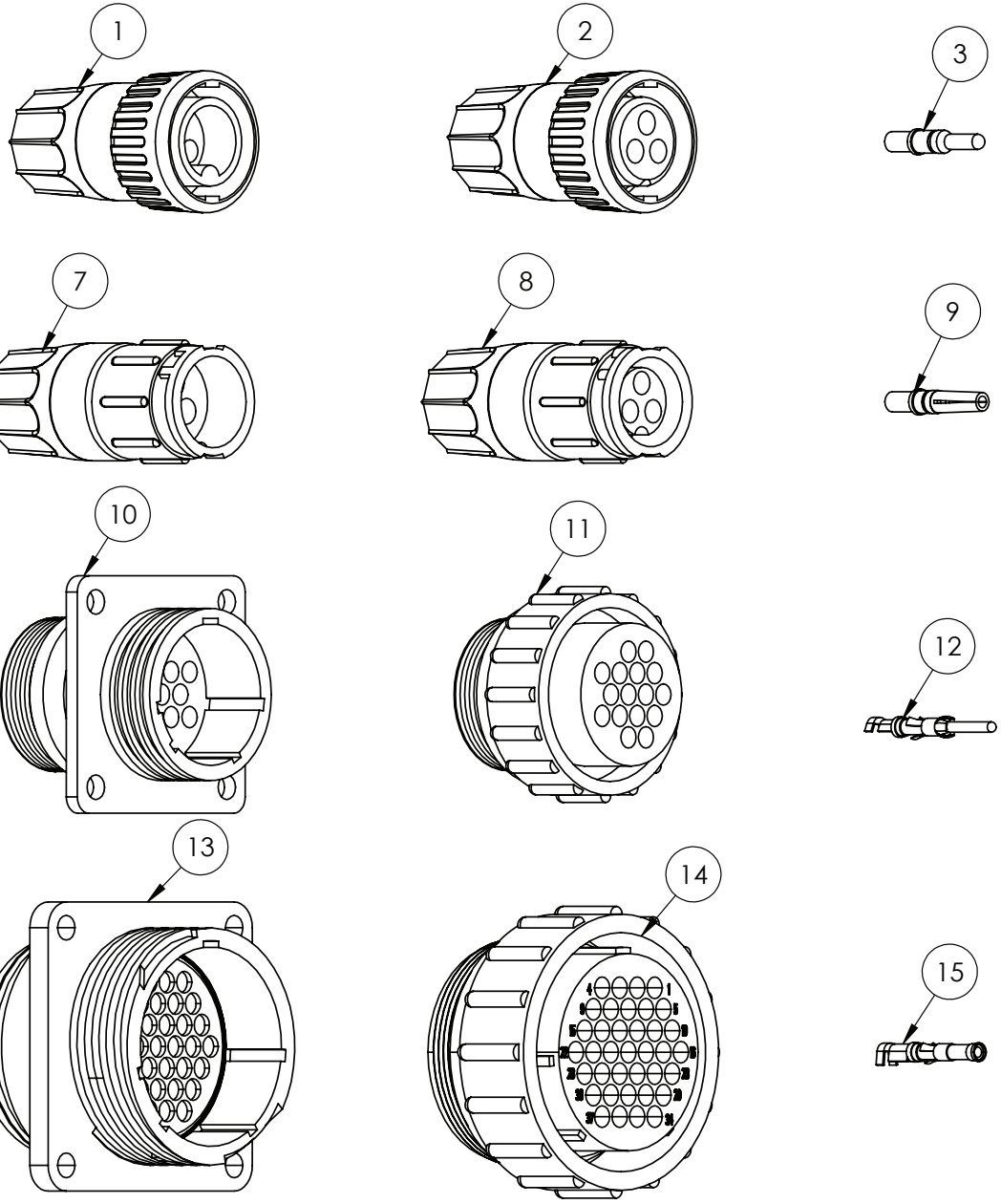

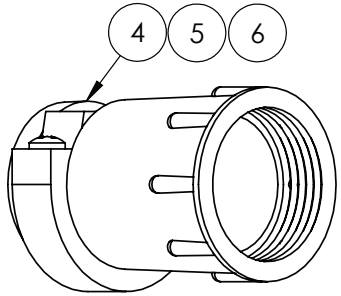

IF DESCRIPTION PREFIX IS ASSEMBLY DRAWING ONLY OR PRODUCTION DRAWING ONLY THE ITEM IS NOT FOR SALE			
ITEM	PART NUMBER	DESCRIPTION	QTY
1	GA5076920	CONNECTOR, 3 PIN KIT, SPEED SENSOR, INCLUDING MALE PINS, RAVEN, 4084001010	1
2	GA5076922	CONNECTOR, 3 PIN KIT, FLOW METER, INCLUDING FEMALE PINS, RAVEN	1
3	GA5076927	RAVEN MALE SPEED SENSOR/FLOW METER PIN	1
4	GA5049175	CONNECTOR, BACKING SHELL, SUIT 16 PIN AMP, RAVEN, 206322	1
5	GA5020560	CONNECTOR, BACKING SHELL 23, SUIT 37 PIN AMP, STANDARD SIZE	1
6	GA5020559	CONNECTOR, BACKING SHELL 23, SUIT 37 PIN AMP, LARGE SIZE	1
7	GA5076921	CONNECTOR, 3 PIN KIT, FLOW METER, INCLUDING MALE PINS, RAVEN	1
8	GA5076923	CONNECTOR, 3 PIN KIT, SPEED SENSOR, INCLUDING FEMALE PINS, RAVEN	1
9	GA5076928	RAVEN FEMALE PIN SPEED SENSOR/ FLOW METER	1
10	GA5076924	CONNECTOR, 16 PIN AMP, SQUARE FLANGE, SUIT MALE PINS, RAVEN, 4084001017, 206036-1	1
11	GA5076925	CONNECTOR, 16 PIN AMP, SUIT FEMALE PINS, RAVEN, 4084001018, 206037-1	1
12	GA5048905	PIN, 14-18 GAUGE GOLD, MALE, SUIT 16 PIN AMP, 4084001162	1
13	GA5020780	CONNECTOR, 37 PIN AMP, FEMALE	1
14	GA5020785	CONNECTOR, 37 PIN AMP, MALE, RAVEN	1
15	GA5048900	PIN, 14-18 GAUGE GOLD, FEMALE, SUIT 16 PIN AMP, 4084001163	1
-	GA5020561	CONNECTOR DUST CAP, 37 PIN AMP, MALE, RAVEN	-
-	GA5075848	DUST CAP, 16 PIN AMP CONNECTOR, FEMALE, 10630171042-E	-
-	GA5020575	DUST CAP, 16 PIN AMP CONNECTOR, MALE	-
-	GA5075927	DUST CAP 37 PIN SERIES 23 (4000 SERIES CONNECTOR DUST CAP, 37 PIN AMP, SERIES 23, RAVEN, 10630172526-B	-
GA7800040 GOLDACRES		PARTS DRAWING ONLY, ELECTRICAL CONNECTORS, AMP-AMPSEAL-SUPERSEAL	REV 00

Raven, AMP & Superseal

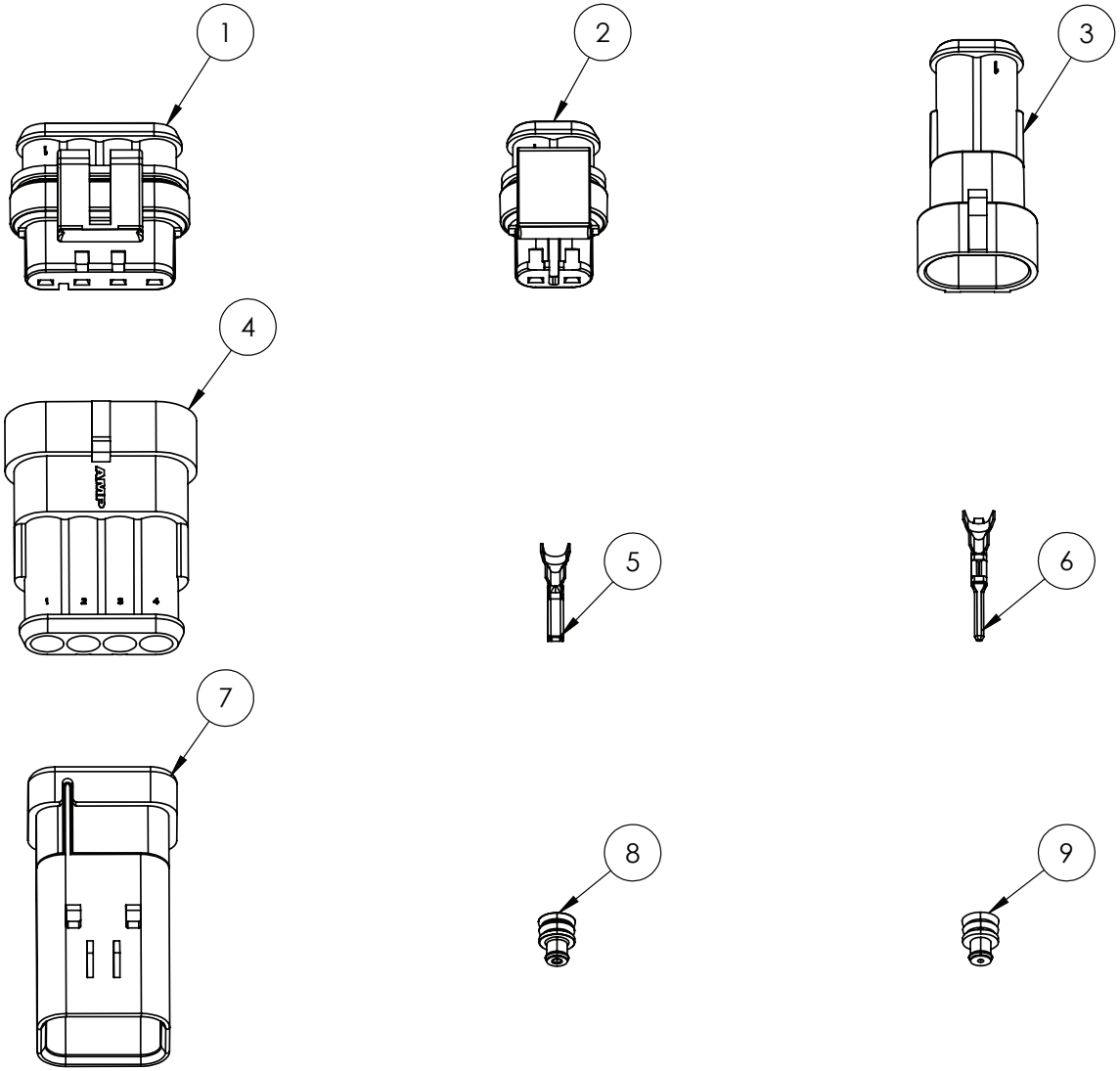

OPTIONAL PARTS			
ITEM	PART NUMBER	DESCRIPTION	QTY
-	GA3001410	ELECTRICAL CONNECTOR, PLUG, 4 SOCKET, SUPERSEAL HALF KIT, IONNIC 50130	-

IF DESCRIPTION PREFIX IS ASSEMBLY DRAWING ONLY OR PRODUCTION DRAWING ONLY THE ITEM IS NOT FOR SALE			
ITEM	PART NUMBER	DESCRIPTION	QTY.
1	GA3001409	ELECTRICAL CONNECTOR, PLUG, 4 SOCKET, SUPERSEAL, AMP 282088-1	1
2	GA3001408	ELECTRICAL CONNECTOR, 2 SOCKET, SUPERSEAL, AMP 282080-1	1
3	GA3001554	ELECTRICAL CONNECTOR, RECEPTACLE, SUPERSEAL, 2 PIN, 282104-1	1
4	GA3001411	ELECTRICAL CONNECTOR, RECEPTACLE, 4 PIN, SUPERSEAL, IONNIC 282106-1	1
5	GA3001413	ELECTRICAL CONTACT, SOCKET, SUPERSEAL, 282110-1	1
6	GA3001412	ELECTRICAL CONTACT, PIN, SUPERSEAL, 282109-1	1
7	GA3001418	ELECTRICAL CONNECTOR, AMPSEAL 16, 4 POSITION, AMP 776488-1	1
8	GA3001414	CONNECTOR SEAL, SUPERSEAL, YELLOW, 281934-2	1
9	GA3001415	CONNECTOR PLUG, SUPERSEAL, RED, 282081-1	1
GA7800040 GOLDACRES		PARTS DRAWING ONLY, ELECTRICAL CONNECTORS, AMP-AMPSEAL-SUPERSEAL	REV 00

Receptical Carriages, AMP-MCP

REPLACEMENT PARTS			
ITEM	PART NUMBER	DESCRIPTION	QTY
A	GA3001528	ELECTRICAL CONTACT, SOCKET, SUIT 9/18 SOCKET RECEPTACLE,AMP MCP 1.5, 1241375-1	-
B	GA3001529	ELECTRICAL CONTACT, SOCKET, SUIT 7 SOCKET RECEPTACLE,AMP MCP 2.8, 1-936649-1	-

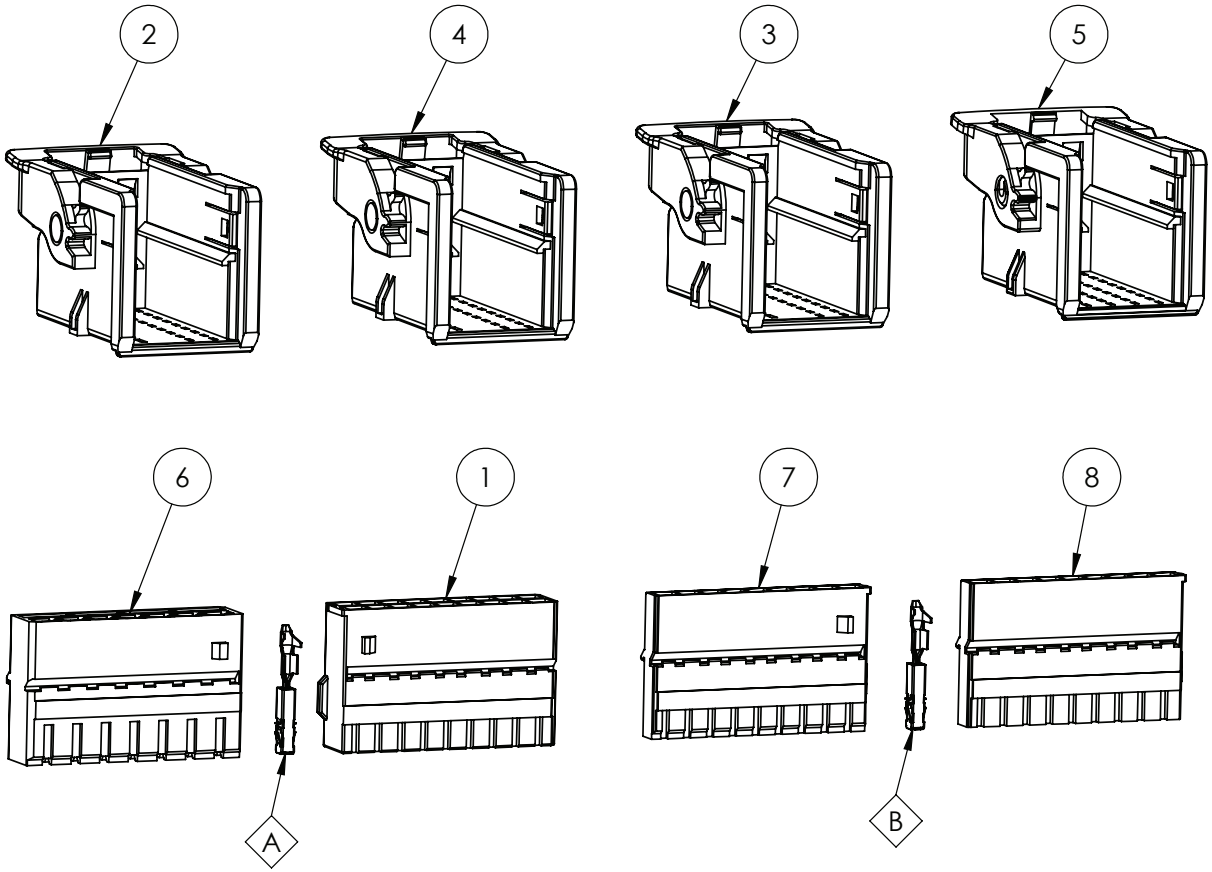

IF DESCRIPTION PREFIX IS ASSEMBLY DRAWING ONLY OR PRODUCTION DRAWING ONLY THE ITEM IS NOT FOR SALE			
ITEM	PART NUMBER	DESCRIPTION	QTY
1	GA3001525	ELECTRICAL CONNECTOR, 18 SOCKET, RECEPTACLE, CAV 1-18, AMP MCP 1.5, 1718489-1	1
2	GA3001520	ELECTRICAL CONNECTOR, 25 SOCKET, RECEPTACLE CARRIAGE, BLACK, AMP MCP 1-1718484-1	1
3	GA3001522	ELECTRICAL CONNECTOR, 25 SOCKET, RECEPTACLE CARRIAGE, BLUE, AMP MCP 1-1718484-3	1
4	GA3001521	ELECTRICAL CONNECTOR, 25 SOCKET, RECEPTACLE CARRIAGE, GREY, AMP MCP 1-1718484-2	1
5	GA3001523	ELECTRICAL CONNECTOR, 36 SOCKET, RECEPTACLE CARRIAGE, PURPLE, AMP MCP 1-1718485-2	1
6	GA3001524	ELECTRICAL CONNECTOR, 7 SOCKET, RECEPTACLE, CAV 19-25, AMP MCP 2.8, 1718488-1	1
7	GA3001526	ELECTRICAL CONNECTOR, 9 SOCKET, RECEPTACLE, CAV 19-27, AMP MCP 1.5, 1718490-1	1
8	GA3001527	ELECTRICAL CONNECTOR, 9 SOCKET, RECEPTACLE, CAV 28-36, AMP MCP 1.5, 1718490-2	1
GA7800506 GOLDACRES		PARTS DRAWING ONLY, ELECTRICAL CONNECTOR, RECEPTICAL CARRIAGES, AMP MCP	REV 00

Electrical Connector, JPT-TE

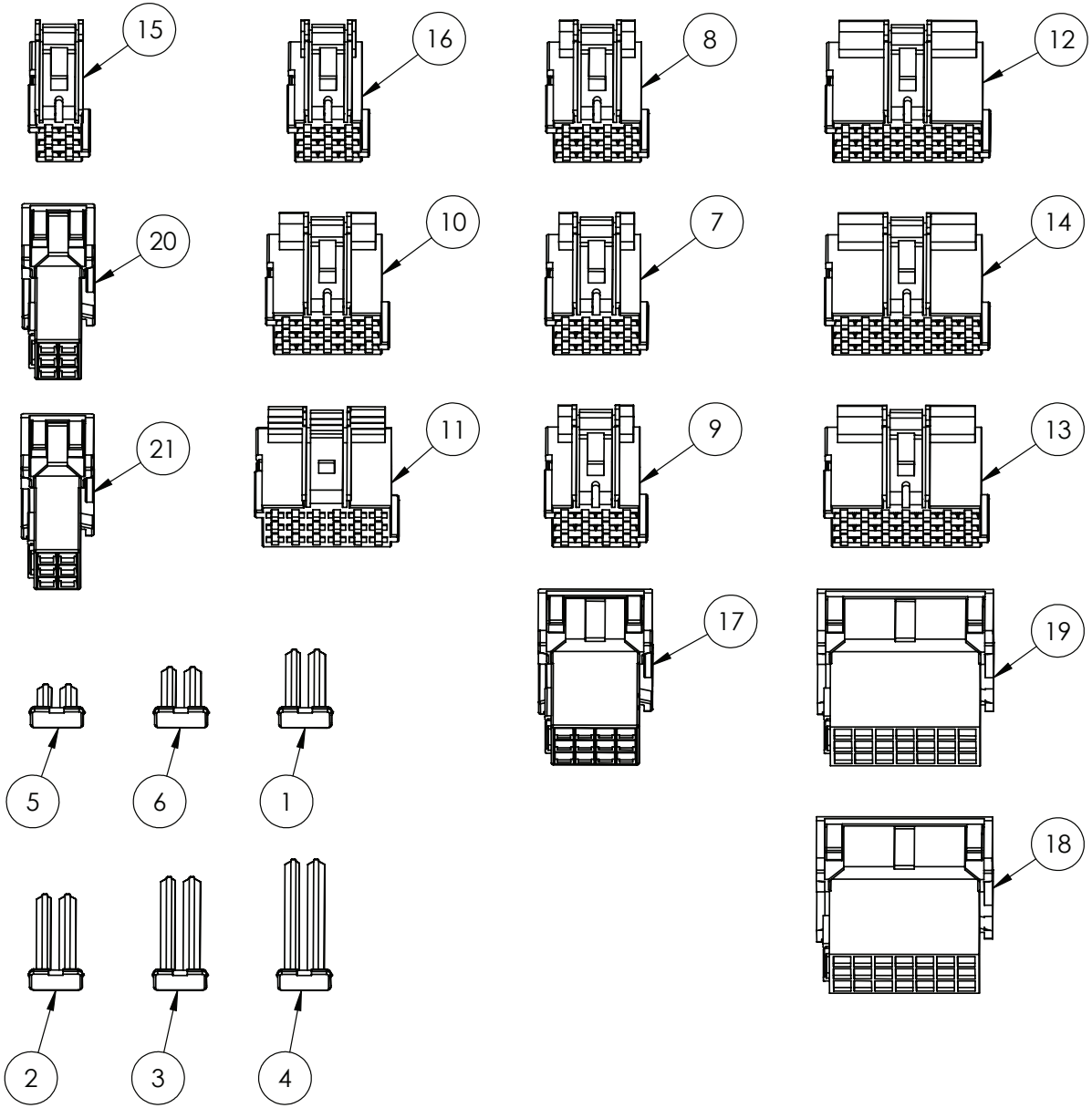

IF DESCRIPTION PREFIX IS ASSEMBLY DRAWING ONLY OR PRODUCTION DRAWING ONLY THE ITEM IS NOT FOR SALE			
ITEM	PART NUMBER	DESCRIPTION	QTY
1	GA3001548	ELECTRICAL CONNECTOR, LOCK, SUIT 12 PIN JPT, GREEN, 967632-1	1
2	GA3001547	ELECTRICAL CONNECTOR, LOCK, SUIT 15 PIN JPT, PURPLE, 967633-1	1
3	GA3001546	ELECTRICAL CONNECTOR, LOCK, SUIT 18 PIN JPT, GREY, 967634-1	1
4	GA3001545	ELECTRICAL CONNECTOR, LOCK, SUIT 21 PIN JPT, BROWN, 967635-1	1
5	GA3001550	ELECTRICAL CONNECTOR, LOCK, SUIT 6 PIN JPT, BLUE, 968271-1	1
6	GA3001549	ELECTRICAL CONNECTOR, LOCK, SUIT 9 PIN JPT, YELLOW, 967631-1	1
7	GA3001535	ELECTRICAL CONNECTOR, PLUG, 12 SOCKET, BLUE, JUNIOR POWER TIMER, TE 1-967622-3	1
8	GA3001534	ELECTRICAL CONNECTOR, PLUG, 12 SOCKET, GREEN, JUNIOR POWER TIMER, TE 1-967622-1	1
9	GA3001536	ELECTRICAL CONNECTOR, PLUG, 12 SOCKET, GREY, JUNIOR POWER TIMER, TE 1-967622-3	1
10	GA3001537	ELECTRICAL CONNECTOR, PLUG, 15 SOCKET, YELLOW, JUNIOR POWER TIMER, TE 1-967623-3	1
11	GA3001538	ELECTRICAL CONNECTOR, PLUG, 18 SOCKET, GREY, JUNIOR POWER TIMER, TE 1-967624-1	1
12	GA3001539	ELECTRICAL CONNECTOR, PLUG, 21 SOCKET, BROWN, JUNIOR POWER TIMER, TE 1-967625-1	1
13	GA3001541	ELECTRICAL CONNECTOR, PLUG, 21 SOCKET, GREEN, JUNIOR POWER TIMER, TE 1-967625-4	1
14	GA3001540	ELECTRICAL CONNECTOR, PLUG, 21 SOCKET, GREY, JUNIOR POWER TIMER, TE 1-967625-2	1
15	GA3001530	ELECTRICAL CONNECTOR, PLUG, 6 SOCKET, GREY, JUNIOR POWER TIMER, TE 1-965640-3	1
16	GA3001533	ELECTRICAL CONNECTOR, PLUG, 9 SOCKET, GREY, JUNIOR POWER TIMER, TE 1-967621-4	1
17	GA3001542	ELECTRICAL CONNECTOR, RECEPTACLE, 12 PIN, GREY, JUNIOR POWER TIMER, TE 1-967627-5	1
18	GA3001544	ELECTRICAL CONNECTOR, RECEPTACLE, 21 PIN, GREEN, JUNIOR POWER TIMER, TE 1-967630-4	1
19	GA3001543	ELECTRICAL CONNECTOR, RECEPTACLE, 21 PIN, GREY, JUNIOR POWER TIMER, TE 1-967630-2	1
20	GA3001531	ELECTRICAL CONNECTOR, RECEPTACLE, 6 PIN, BLUE, JUNIOR POWER TIMER, TE 1-965641-1	1
21	GA3001532	ELECTRICAL CONNECTOR, RECEPTACLE, 6 PIN, GREEN, JUNIOR POWER TIMER, TE 1-965641-5	1
GA7800507 GOLDACRES		PARTS DRAWING ONLY, ELECTRICAL CONNECTORS, JUNIOR POWER TIMER-TE	REV

Electrical Connectors, Weather Pack

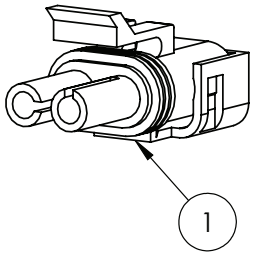

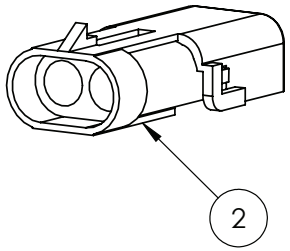

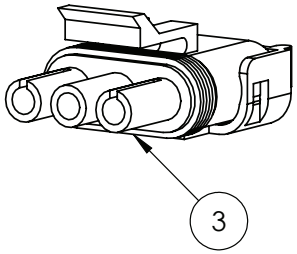

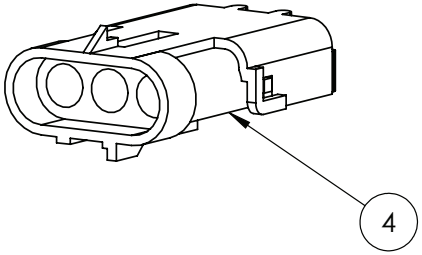

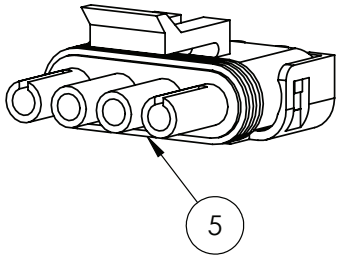

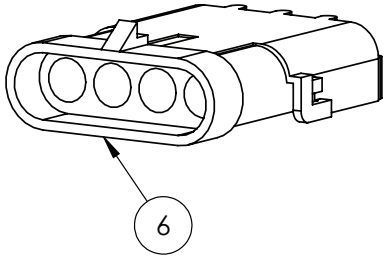

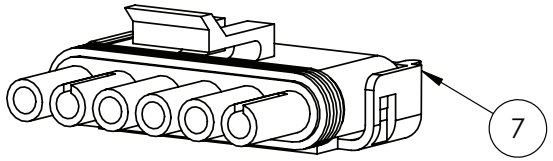

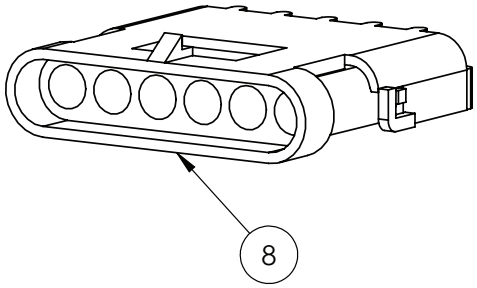

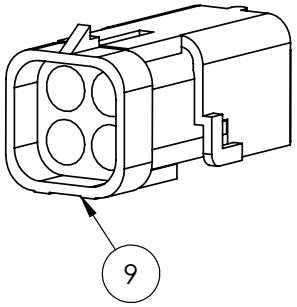

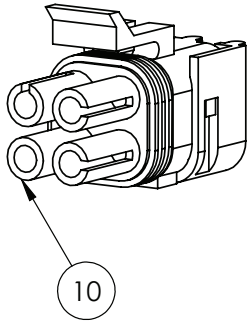

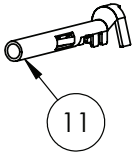

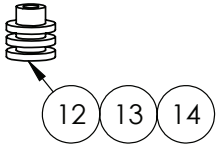

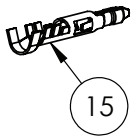

IF DESCRIPTION PREFIX IS ASSEMBLY DRAWING ONLY OR PRODUCTION DRAWING ONLY THE ITEM IS NOT FOR SALE			
ITEM	PART NUMBER	DESCRIPTION	QTY
1	GA5001351	MALE 2 PIN CONNECTOR	1
2	GA5007381	FEMALE 2 PIN CONNECTOR	1
3	GA5002211	MALE 3 PIN CONNECTOR	1
4	GA5048550	FEMALE 3 PIN CONNECTOR	1
5	GA5007385	MALE 4 PIN CONNECTOR	1
6	GA5007383	4 FEMALE CONNECTOR	1
7	GA5004009	MALE 6 PIN CONNECTOR	1
8	GA5048510	FEMALE 6 PIN PLUG	1
9	GA5049000	CONNECTOR, FEMALE, 4 PIN, SQUARE, WEATHER PACK	1
10	GA5050805	MALE 4 PIN SQUARE CONNECTOR	1
11	GA5016619	FEMALE CONNECTOR PIN SUIT WEATHER PACK PLUG	1
12	GA5014857	SEAL FOR WEATHER PACK CONNECTORS (GREEN)	1
13	GA5014855	SEAL, BLUE, WEATHER PACK CONNECTOR, WIRE FROM 3.45 - 4.30mm	1
14	GA5024895	SEAL, D RED, WEATHER PACK CONNECTOR, WIRE FROM 22 - 24AWG	1
15	GA5016617	PIN, MALE, SEALED, WEATHER PACK, WIRE 1.0 - 2.0mm	1
GA7800043 GOLDACRES		ELECTRICAL CONNECTORS, WEATHER PACK	REV 00

Electrical Connector, Deutsch

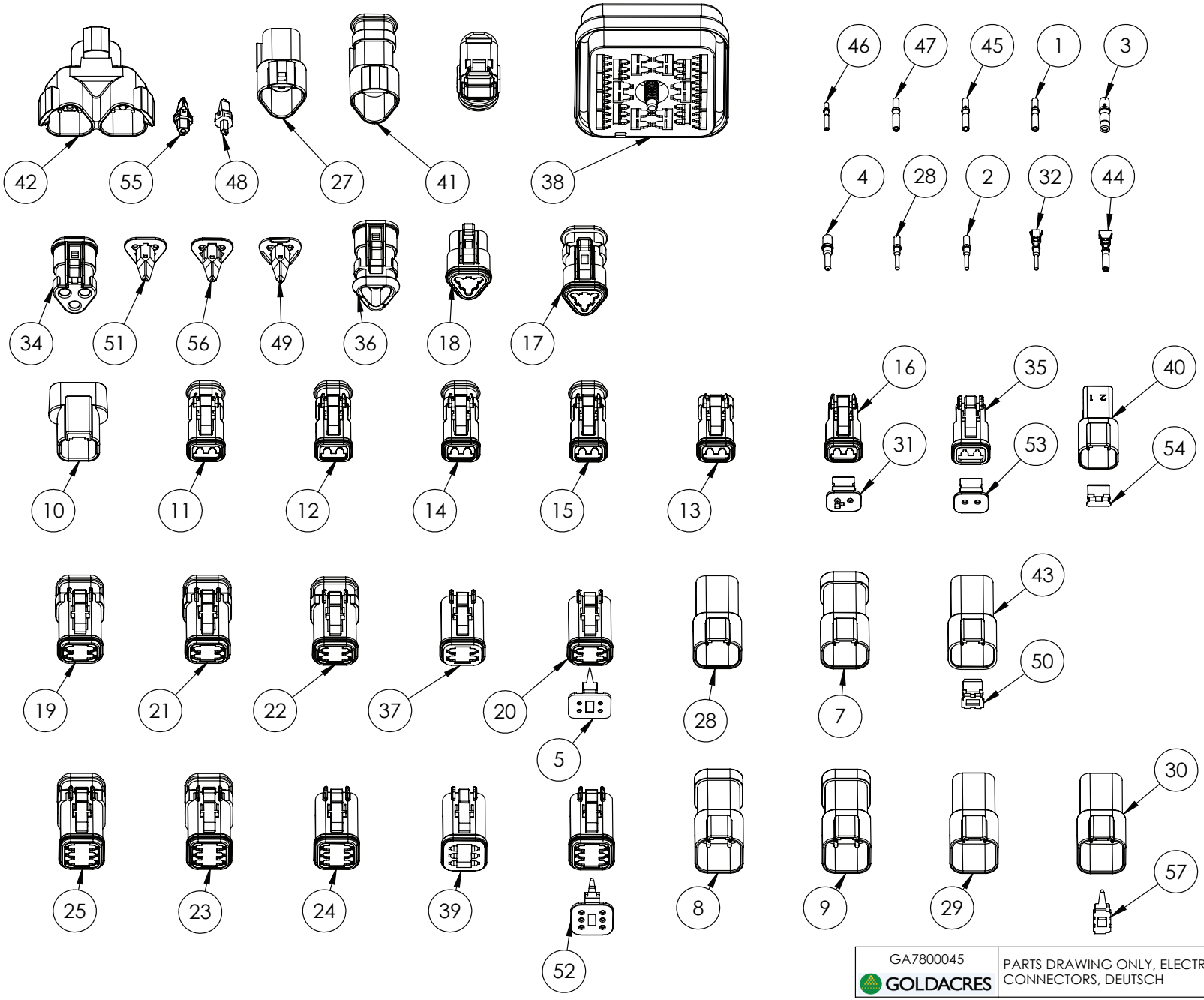

GA7800045	PARTS DRAWING ONLY, ELECTRICAL CONNECTORS, DEUTSCH	REV 00
GOLDACRES		

Electrical Connector, Deutsch, Parts List

IF DESCRIPTION PREFIX IS ASSEMBLY DRAWING ONLY OR PRODUCTION DRAWING ONLY THE ITEM IS NOT FOR SALE			
ITEM	PART NUMBER	DESCRIPTION	QTY.
1	GA3000873	ELECTRICAL CONNECTOR, ISO BUS, 4P PLUG IBRC SUIT GA3000872, 14084002132	1
2	GA5061270	SOCKET, FEMALE, SOLID, NICKEL, NUMBER 12, DEUTSCH	1
3	GA3000877	SOCKET, FEMALE, SOLID, NICKEL, 8-10 AWG, DEUTSCH, 0462-203-08141	1
4	GA5061260	CONNECTOR, DEUTSCH, CONTACT, PIN, SOLID, AWG 12-14, NICKEL	1
5	GA5050845	DEUTSCH 4PIN WEDGELOCK PLUG DT(W4S)	1
6	GA3001452	ELECTRICAL CONNECTOR, BACKSHELL, DEUTSCH, 90 DEGREE, SUIT 2 PIN, 1011-256-0205	1
7	GA3001443	ELECTRICAL CONNECTOR, BUS BAR, DEUTSCH, 4 PIN, 1X4 BUS, DT04-4P-EP13	1
8	GA3001444	ELECTRICAL CONNECTOR, BUS BAR, DEUTSCH, 6 PIN, 1X6 BUS, DT04-6P-EP13	1
9	GA3001445	ELECTRICAL CONNECTOR, BUS BAR, DEUTSCH, 6 PIN, 2X3 BUS, BLACK, DT04-6P-EP14	1
10	GA3001442	ELECTRICAL CONNECTOR, DEUTSCH, DIODE, 2 PIN RECEPTACLE, BLACK, DT04-2P-RT01	1
11	GA3001464	ELECTRICAL CONNECTOR, DEUTSCH, PLUG, 2 SOCKET, BLACK, SHRINK BOOT, DT06-2S-EP11	1
12	GA3001462	ELECTRICAL CONNECTOR, DEUTSCH, PLUG, 2 SOCKET, BLACK, SHRINK BOOT, SMALL SEAL, DT06-2S-CE13	1
13	GA3001460	ELECTRICAL CONNECTOR, DEUTSCH, PLUG, 2 SOCKET, END CAP, SMALL SEAL, DT06-2S-CE01	1
14	GA3001463	ELECTRICAL CONNECTOR, DEUTSCH, PLUG, 2 SOCKET, SHRINK BOOT, DT06-2S-E008	1
15	GA3001461	ELECTRICAL CONNECTOR, DEUTSCH, PLUG, 2 SOCKET, SHRINK BOOT, SMALL SEAL, DT06-2S-CE04	1
16	GA3001459	ELECTRICAL CONNECTOR, DEUTSCH, PLUG, 2 SOCKET, SMALL SEAL, DT06-2S-C015	1
17	GA3001466	ELECTRICAL CONNECTOR, DEUTSCH, PLUG, 3 SOCKET, SHRINK BOOT, SMALL SEAL, DT06-3S-CE04	1
18	GA3001465	ELECTRICAL CONNECTOR, DEUTSCH, PLUG, 3 SOCKET, SMALL SEAL, DT06-3S-C015	1
19	GA3001469	ELECTRICAL CONNECTOR, DEUTSCH, PLUG, 4 SOCKET, BLACK, SHRINK BOOT, SMALL SEAL, DT06-4S-CE13	1
20	GA3001468	ELECTRICAL CONNECTOR, DEUTSCH, PLUG, 4 SOCKET, BLACK, SMALL SEAL, DT06-4S-CE06	1
21	GA3001470	ELECTRICAL CONNECTOR, DEUTSCH, PLUG, 4 SOCKET, SHRINK BOOT, DT06-4S-E008	1
22	GA3001467	ELECTRICAL CONNECTOR, DEUTSCH, PLUG, 4 SOCKET, SHRINK BOOT, SMALL SEAL, DT06-4S-CE04	1
23	GA3001473	ELECTRICAL CONNECTOR, DEUTSCH, PLUG, 6 SOCKET, BLACK, SHRINK BOOT, SMALL SEAL, DT06-6S-CE13	1
24	GA3001472	ELECTRICAL CONNECTOR, DEUTSCH, PLUG, 6 SOCKET, BLACK, SMALL SEAL, DT06-6S-CE06	1
25	GA3001474	ELECTRICAL CONNECTOR, DEUTSCH, PLUG, 6 SOCKET, SHRINK BOOT, DT06-6S-E008	1
26	GA3001471	ELECTRICAL CONNECTOR, DEUTSCH, PLUG, 6 SOCKET, SMALL SEAL, DT06-6S-C015	1
27	GA3001438	ELECTRICAL CONNECTOR, DEUTSCH, RECEPTACLE, 3 PIN, SMALL SEALS, DT04-3P-C015	1
28	GA3001439	ELECTRICAL CONNECTOR, DEUTSCH, RECEPTACLE, 4 PIN, BLACK, SMALL SEALS, DT04-4P-CE02	1

IF DESCRIPTION PREFIX IS ASSEMBLY DRAWING ONLY OR PRODUCTION DRAWING ONLY THE ITEM IS NOT FOR SALE			
ITEM	PART NUMBER	DESCRIPTION	QTY.
29	GA3001441	ELECTRICAL CONNECTOR, DEUTSCH, RECEPTACLE, 6 PIN, BLACK, SMALL SEALS, DT04-6P-CE02	1
30	GA3001440	ELECTRICAL CONNECTOR, DEUTSCH, RECEPTACLE, 6 PIN, SMALL SEALS, DT04-6P-C015	1
31	GA3001478	ELECTRICAL CONNECTOR, DEUTSCH, WEDGE LOCK, SUIT 2S, GREY, A KEY, W2SA	1
32	GA5075255	PIN, MALE, NICKEL, CRIMP STYLE, NUMBER 16, DEUTSCH	1
33	GA5061240	PIN, MALE, SOLID, NICKEL, NUMBER 16, GREEN BAND, AWG 14, DEUTSCH, 0460-215-16141	1
34	GA5054350	PLUG, GREY, 120 OHM RESISTOR TERMINATOR, DEUTSCH	1
35	GA5052820	PLUG, 2 WAY, SOCKET, DT SERIES, DEUTSCH	1
36	GA5011831	PLUG, 3 WAY SOCKETS, SHRINK BOOT ADAPTER, DEUTSCH	1
37	GA5050840	PLUG, 4 WAY SOCKET, DT SERIES, DEUTSCH, DT06-4S	1
38	GA5060440	PLUG, 48 SUITS PINS, DRB SERIES, DEUTSCH	1
39	GA5050960	PLUG, 6 WAY SOCKET, DT SERIES, DEUTSCH	1
40	GA5052830	RECEPTACLE, 2 WAY, PINS, DT SERIES, DEUTSCH, DT04-2P	1
41	GA5050740	RECEPTACLE, 3 PIN, SHRINK BOOT, DEUTSCH, DT04-3P-E008	1
42	GA5054365	RECEPTACLE, 3 WAY 3 PIN, Y SPLITTER, DEUTSCH	1
43	GA5013783	RECEPTACLE, 4 WAY, PINS, DT SERIES DEUTSCH	1
44	GA3000022	SOCKET, FEMALE, NICKEL, CRIMP STYLE, NUMBER 16, DEUTSCH	1
45	GA5053235	SOCKET, FEMALE, NICKEL, NUMBER 16, 14 AWG, GREEN BAND, DEUTSCH	1
46	GA5061210	SOCKET, FEMALE, SOLID, NICKEL, NUMBER 20, DEUTSCH	1
47	GA5061230	SOCKET, FEMALE, SOLID, NICKEL, NUMBER 16, DEUTSCH	1
48	GA5050760	WEDGE LOCK, GREEN, 3 PIN, DEUTSCH, W3-P	1
49	GA5050761	WEDGE LOCK, GREEN, 3 SOCKET, DEUTSCH	1
50	GA5050765	WEDGE LOCK, GREEN, 4 WAY PINS, DEUTSCH	1
51	GA5050750	WEDGE LOCK, ORANGE, 3 SOCKET, DEUTSCH	1
52	GA5050965	WEDGE LOCK, ORANGE, 6 WAY SOCKETS, DT SERIES, DEUTSCH	1
53	GA5052825	WEDGE LOCK, 2 WAY, SOCKETS, DT SERIES, DEUTSCH	1
54	GA5052835	WEDGE LOCK, 2 WAY, DT SERIES, DEUTSCH	1
55	GA5017719	WEDGE LOCK, BLUE, 3 PIN, SUIT TERMINATOR, DEUTSCH	1
56	GA5017721	WEDGE LOCK, BLUE, 3 SOCKET, DEUTSCH	1
57	GA5050975	WEDGE LOCK, 6 PIN SUIT DEUTSCH, DT04-6P	1

GA7800045	PARTS DRAWING ONLY, ELECTRICAL CONNECTORS, DEUTSCH	REV 00
GOLDACRES		

Electrical Connector, Deutsch, DT-DTM

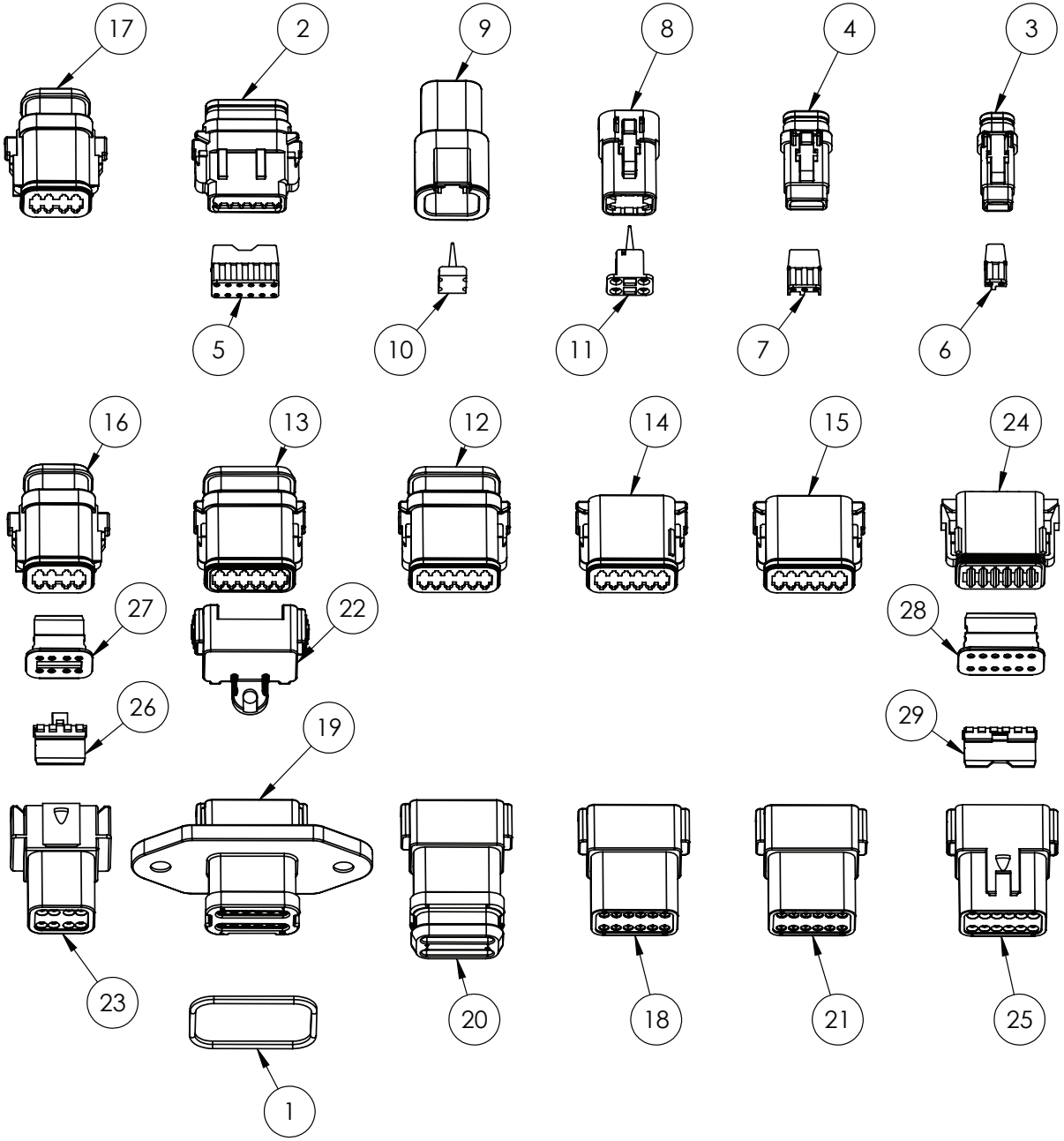

IF DESCRIPTION PREFIX IS ASSEMBLY DRAWING ONLY OR PRODUCTION DRAWING ONLY THE ITEM IS NOT FOR SALE			
ITEM	PART NUMBER	DESCRIPTION	QTY.
1	GA3001436	CONNECTOR SEAL, DEUTSCH, SUIT LE03 FLANGE, 1013-003-1206	1
2	GA3001475	ELECTRICAL CONNECTOR, DTM, PLUG, 12 SOCKET, SHRINK BOOT, DTM06-12SA-E007	1
3	GA3001476	ELECTRICAL CONNECTOR, DTM, PLUG, 2 SOCKET, SHRINK BOOT, DTM06-2SA-E007	1
4	GA3001477	ELECTRICAL CONNECTOR, DTM, PLUG, 3 SOCKET, SHRINK BOOT, DTM06-3SA-E007	1
5	GA3001481	ELECTRICAL CONNECTOR, DTM, WEDGE LOCK, SUIT 12S, ORANGE, WM12S	1
6	GA3001482	ELECTRICAL CONNECTOR, DTM, WEDGE LOCK, SUIT 2S, ORANGE, WM2S	1
7	GA3001483	ELECTRICAL CONNECTOR, DTM, WEDGE LOCK, SUIT 3S, ORANGE, WM3S	1
8	GA3001485	ELECTRICAL CONNECTOR, DTP, PLUG, 4 SOCKET, DTP06-4S	1
9	GA3001484	ELECTRICAL CONNECTOR, DTP, RECEPTACLE, 4 PIN, DTP04-4P	1
10	GA3001486	ELECTRICAL CONNECTOR, DTP, WEDGE LOCK, SUIT 4P, WP4P	1
11	GA3001487	ELECTRICAL CONNECTOR, DTP, WEDGE LOCK, SUIT 4S, WP4S	1
12	GA3001457	ELECTRICAL CONNECTOR, DEUTSCH, PLUG, 12 SOCKET, SHRINK BOOT, DT06-12SA-E008	1
13	GA3001456	ELECTRICAL CONNECTOR, DEUTSCH, PLUG, 12 SOCKET, SHRINK BOOT, SMALL SEALS, DT06-12SA-CE04	1
14	GA3001458	ELECTRICAL CONNECTOR, DEUTSCH, PLUG, 12 SOCKET, SMALL SEAL, DT06-12SB-C015	1
15	GA3001455	ELECTRICAL CONNECTOR, DEUTSCH, PLUG, 12 SOCKET, SMALL SEALS, DT06-12SA-C015	1
16	GA3001454	ELECTRICAL CONNECTOR, DEUTSCH, PLUG, 8 SOCKET, SHRINK BOOT, DT06-08SA-E008	1
17	GA3001453	ELECTRICAL CONNECTOR, DEUTSCH, PLUG, 8 SOCKET, SHRINK BOOT, SMALL SEALS, DT06-08SA-CE04	1
18	GA3001437	ELECTRICAL CONNECTOR, DEUTSCH, RECEPTACLE, 12 PIN, B CODED SMALL SEALS, DT04-12PB-C015	1
19	GA3001435	ELECTRICAL CONNECTOR, DEUTSCH, RECEPTACLE, 12 PIN, FLANGE OUTSIDE MOUNT, DT04-12PA-LE03	1
20	GA3001434	ELECTRICAL CONNECTOR, DEUTSCH, RECEPTACLE, 12 PIN, SHRINK BOOT, DT04-12PA-E008	1
21	GA3001433	ELECTRICAL CONNECTOR, DEUTSCH, RECEPTACLE, 12 PIN, SMALL SEALS, DT04-12PA-C015	1
22	GA3001555	ELECTRICAL CONNECTOR, DUST CAP, SUIT DEUTSCH 12 SOCKET, 1011-349-1205	1
23	GA3000938	ELECTRICAL CONNECTOR, RECEPTACLE, 8 PIN, DEUTSCH DT04-08PA	1
24	GA5061780	PLUG, 12 WAY SOCKETS, DT SERIES, DEUTSCH	1
25	GA5061785	RECEPTACLE, 12 WAY SUIT PINS, DT SERIES, DEUTSCH	1
26	GA3000940	WEDGE LOCK, SUIT 8 PIN RECEPTACLE, DEUTSCH W8P	1
27	GA5050985	WEDGE LOCK, ORANGE, 8 WAY SOCKETS, DT SERIES, W8S DEUTSCH	1
28	GA5070595	WEDGE LOCK, GREEN, 12 WAY SOCKETS, DEUTSCH	1
29	GA5070590	WEDGE LOCK, GREEN, 12 WAY SUIT PINS, DEUTSCH	1
GA7800045 GOLDACRES		PARTS DRAWING ONLY, ELECTRICAL CONNECTORS, DEUTSCH	REV 00

Electrical Connector, Deutsch, Bus Bars

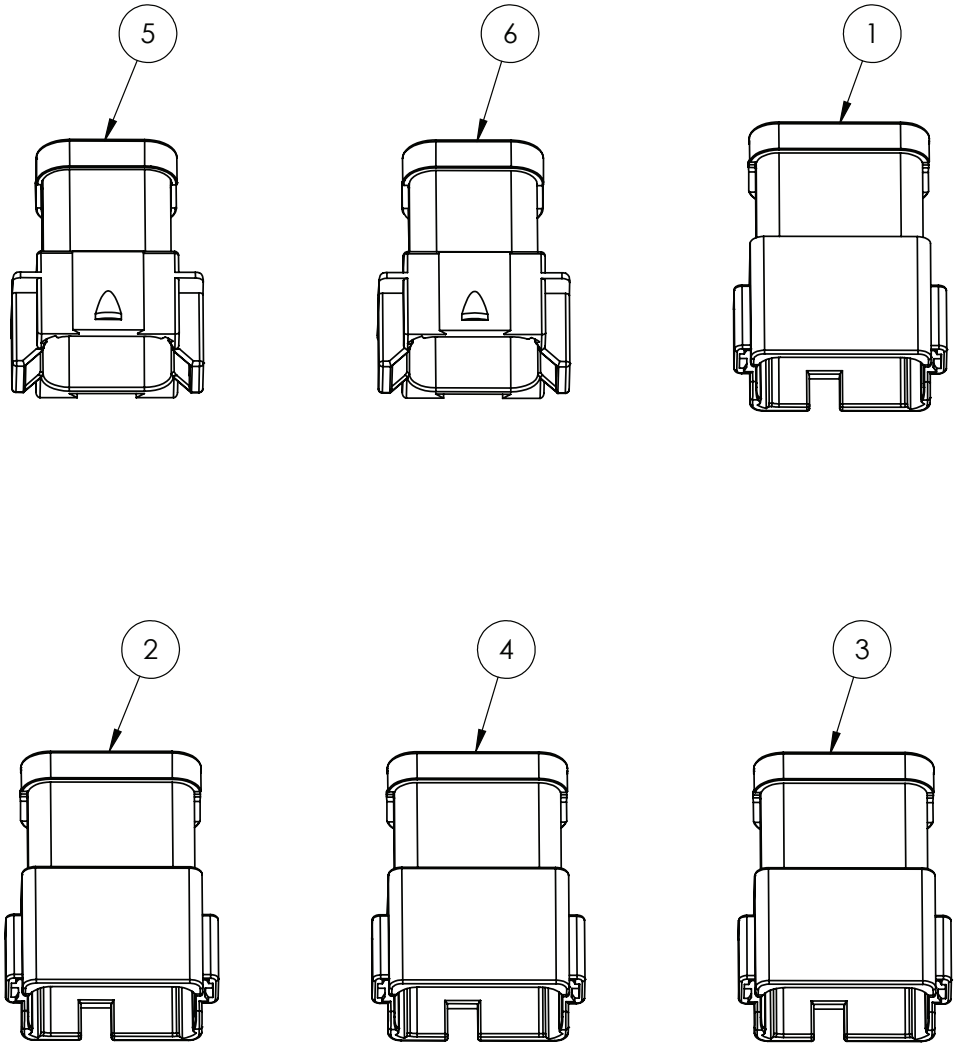

IF DESCRIPTION PREFIX IS ASSEMBLY DRAWING ONLY OR PRODUCTION DRAWING ONLY THE ITEM IS NOT FOR SALE			
ITEM	PART NUMBER	DESCRIPTION	QTY.
1	GA3001448	ELECTRICAL CONNECTOR, BUS BAR, DEUTSCH, 12 PIN, 1X12 BUS, DT04-12PA-P021	1
2	GA3001449	ELECTRICAL CONNECTOR, BUS BAR, DEUTSCH, 12 PIN, 2X6 BUS, DT04-12PA-P026	1
3	GA3001451	ELECTRICAL CONNECTOR, BUS BAR, DEUTSCH, 12 PIN, 3X4 BUS, DT04-12PA-P075	1
4	GA3001450	ELECTRICAL CONNECTOR, BUS BAR, DEUTSCH, 12 PIN, 4X3 BUS, DT04-12PA-P030	1
5	GA3001446	ELECTRICAL CONNECTOR, BUS BAR, DEUTSCH, 8 PIN, 1X8 BUS, DT04-08PA-P021	1
6	GA3001447	ELECTRICAL CONNECTOR, BUS BAR, DEUTSCH, 8 PIN, 2X4 BUS, DT04-08PA-P026	1
GA7800045 GOLDACRES		PARTS DRAWING ONLY, ELECTRICAL CONNECTORS, DEUTSCH	REV 00

Electrical Connectors, Deutsch

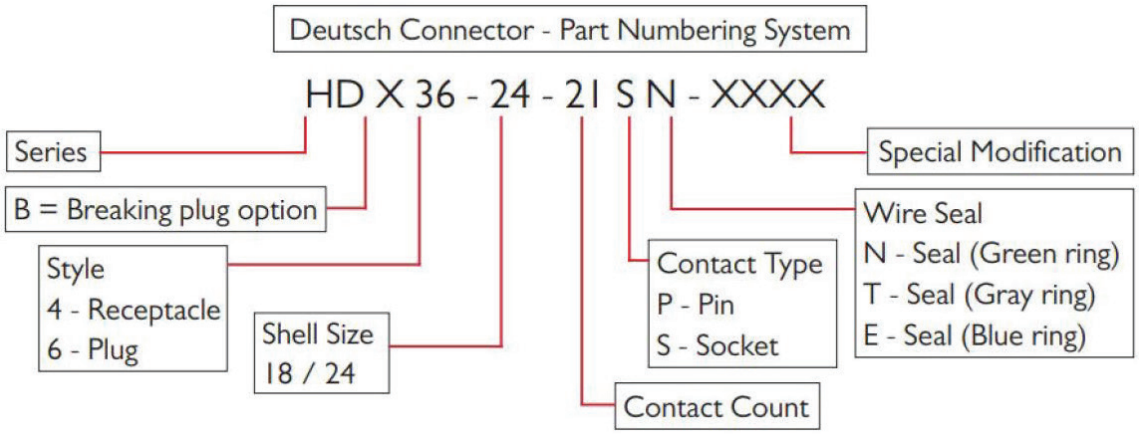

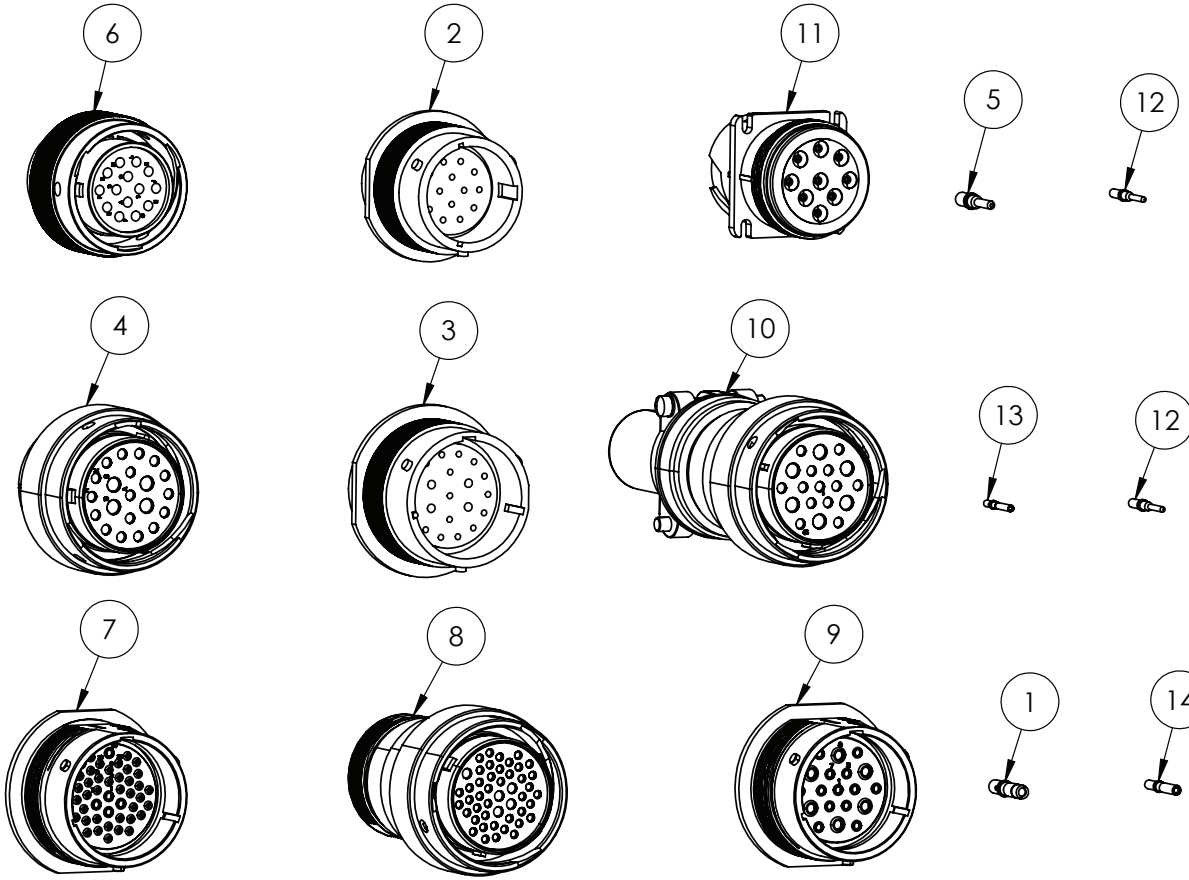

IF DESCRIPTION PREFIX IS ASSEMBLY DRAWING ONLY OR PRODUCTION DRAWING ONLY THE ITEM IS NOT FOR SALE			
ITEM	PART NUMBER	DESCRIPTION	QTY.
1	GA3000877	SOCKET, FEMALE, SOLID, NICKEL, 8-10 AWG, DEUTSCH, 0462-203-08141	1
2	GA5002671	CONNECTOR HD34-18-14PN DEUTSCH	1
3	GA5002675	CONNECTOR HD34-24-21PN DEUTSCH	1
4	GA5002655	CONNECTOR HD36-24-21SN-059 DEUTSCH	1
5	GA5061260	CONNECTOR, DEUTSCH, CONTACT, PIN, SOLID, AWG 12-14, NICKEL	1
6	GA5002663	CONNECTOR, DEUTSCH, 14 PIN, FEMALE, HD36-18-14SN	1
7	GA5062635	DEUTSCH CONNECTOR HD34-24-47-PE	1
8	GA5062640	DEUTSCH CONNECTOR HD36-24-47-SE-059 (STRAIN RELIEF)	1
9	GA5021315	DEUTSCH CONNECTOR HD34-24-19PN	1
10	GA5021310	DEUTSCH CONNECTOR HD36-24-19SN-059 (STRAIN RELIEF)	1
11	GA3001488	ELECTRICAL CONNECTOR, DEUTSCH, 9 PIN, HD10 J1939, HD10-9-1939PE	1
12	GA5061240	PIN, MALE, SOLID, NICKEL, NUMBER 16, GREEN BAND, AWG 14, DEUTSCH, 0460-215-16141	2
13	GA5061210	SOCKET, FEMALE, SOLID, NICKEL, NUMBER 20, DEUTSCH	1
14	GA5061230	SOCKET, FEMALE, SOLID, NICKEL, NUMBER 16, DEUTSCH	1
GA7800044 GOLDACRES		PARTS DRAWING ONLY, ELECTRICAL CONNECTORS, DEUTSCH	REV 00

Electrical Connectors, Deutsch



IF DESCRIPTION PREFIX IS ASSEMBLY DRAWING ONLY OR PRODUCTION DRAWING ONLY THE ITEM IS NOT FOR SALE			
ITEM	PART NUMBER	DESCRIPTION	QTY.
1	GA3001491	ELECTRICAL CONNECTOR, HD30, PLUG, 29 PINS, WITH CLAMP ASSEMBLY, SMALL SEAL, HD36-24-29PE-059	1
2	GA3001492	ELECTRICAL CONNECTOR, HD30, PLUG, 47 PINS, WITH CLAMP ASSEMBLY, SMALL SEAL, HD36-24-47PE-059	1
3	GA3001489	ELECTRICAL CONNECTOR, HD30, RECEPTACLE, 29 SOCKETS, SMALL SEAL, HD34-24-29SE	1
4	GA3001490	ELECTRICAL CONNECTOR, HD30, RECEPTACLE, 47 SOCKETS, SMALL SEAL, HD34-24-47SE	1
5	GA3001498	ELECTRICAL CONNECTOR, HDP20, PLUG, 20 PINS, HDP26-18-20PN	1
6	GA3001499	ELECTRICAL CONNECTOR, HDP20, PLUG, 20 SOCKETS, HDP26-18-20SE-L017	1
7	GA3001500	ELECTRICAL CONNECTOR, HDP20, PLUG, 21 SOCKETS, HDP26-18-21SN	1
8	GA3001501	ELECTRICAL CONNECTOR, HDP20, PLUG, 31 PINS, HDP26-24-31PT	1
9	GA3001502	ELECTRICAL CONNECTOR, HDP20, PLUG, 31 SOCKETS, HDP26-24-31SE	1
10	GA3001503	ELECTRICAL CONNECTOR, HDP20, PLUG, 6 SOCKETS, HDP26-18-6SN	1
11	GA3001493	ELECTRICAL CONNECTOR, HDP20, RECEPTACLE, 20 PINS, SMALL SEAL, HDP24-18-20PE-L017	1
12	GA3001494	ELECTRICAL CONNECTOR, HDP20, RECEPTACLE, 20 SOCKETS, HDP24-18-20SN	1
13	GA3001495	ELECTRICAL CONNECTOR, HDP20, RECEPTACLE, 21 PINS, HDP24-18-21PN	1
14	GA3001496	ELECTRICAL CONNECTOR, HDP20, RECEPTACLE, 31 PINS, HDP24-24-31PE	1
15	GA3001497	ELECTRICAL CONNECTOR, HDP20, RECEPTACLE, 31 SOCKETS, HDP24-24-31ST	1
16	GA3001504	ELECTRICAL CONNECTOR, HDP20, RECEPTICAL, 6 PINS, HDP24-18-6PN	1
GA7800044 GOLDACRES		PARTS DRAWING ONLY, ELECTRICAL CONNECTORS, DEUTSCH	REV 00

Electrical Connectors, Deutsch

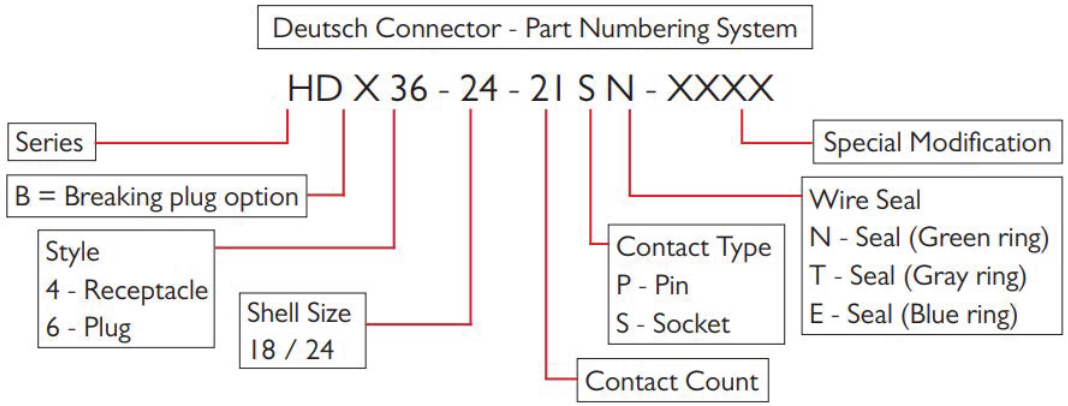

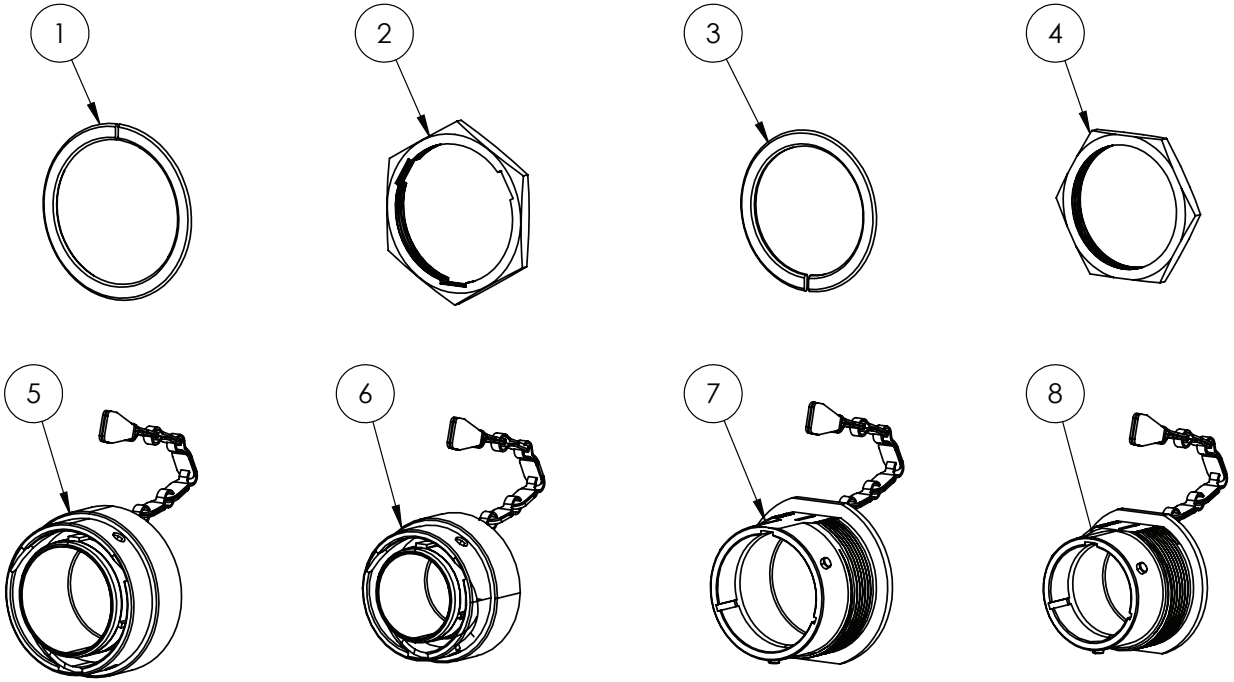

IF DESCRIPTION PREFIX IS ASSEMBLY DRAWING ONLY OR PRODUCTION DRAWING ONLY THE ITEM IS NOT FOR SALE			
ITEM	PART NUMBER	DESCRIPTION	QTY
1	GA5017621	WASHER DEUTSCH SHELL #24	1
2	GA5012399	NUT, FOR CONNECTOR, 24 SHELL, DEUTSCH	1
3	GA5009893	HD SERIES WASHER SIZE #18 SHELL	1
4	GA5009887	HD NUT SIZE #18 SHELL	1
5	GA5020925	DUST CAP, FEMALE, 24 SHELL, ALUMINIUM, DEUTSCH, HDC36-24	1
6	GA5020915	DUST CAP, SUIT HDC36-18 CONNECTOR, DEUTSCH	1
7	GA5020920	DUST CAP, MALE, 24 SHELL, ALUMINIUM, DEUTSCH, HDC34-24	1
8	GA5020910	DUST CAP, SUIT HDC34-18 CONNECTOR, DEUTSCH	1
GA7800047 GOLDACRES		ELECTRICAL CONNECTORS - DEUTSCH	REV 00

11 - Hydraulic & Pneumatics

Hydraulic Reservoir

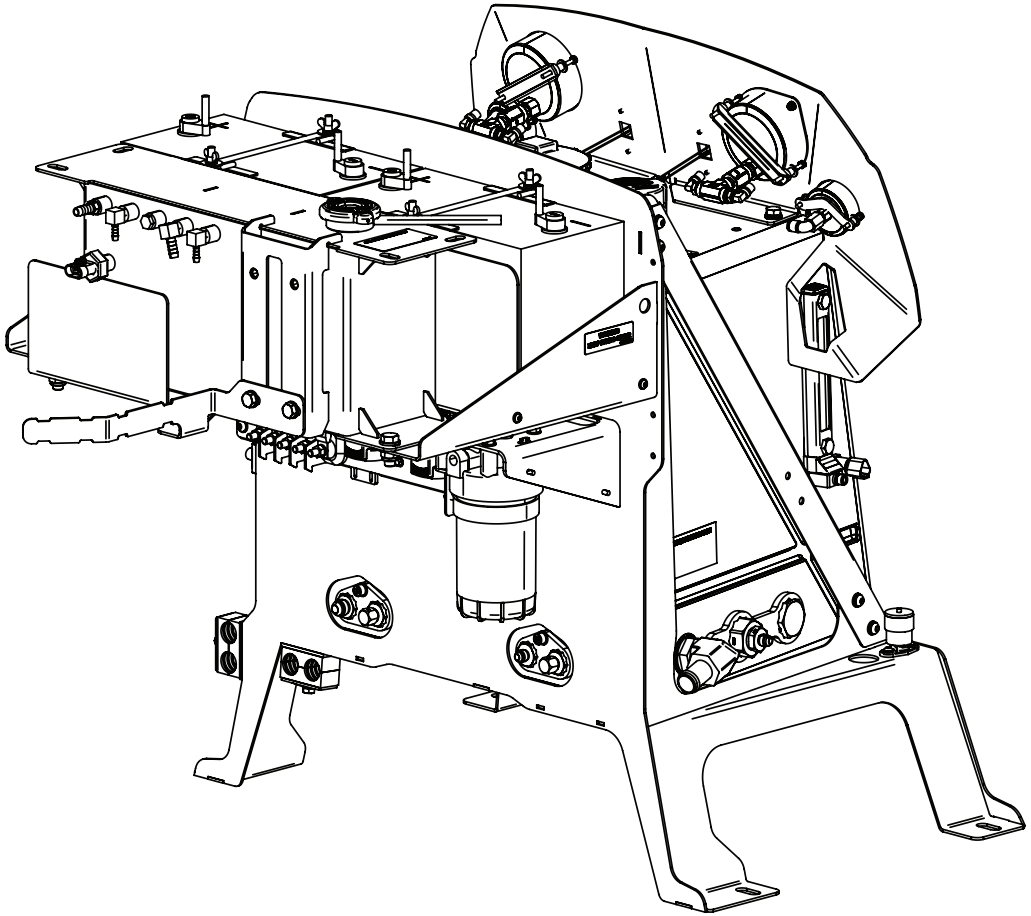

BUILD OPTIONS:
65217 - PLUMBING DUAL LINES
70011 - 260L/MIN DIAPHRAGM PUMP - HYDRAULIC DRIVE
80105 - FRONT LINKAGE SP's ONLY

GA6101953 GOLDACRES	HYDRAULIC OIL RESERVOIR ASSEMBLY, LF SP S3	REV 00

Base Plumbing & Service Indicator, Hydraulic Reservoir

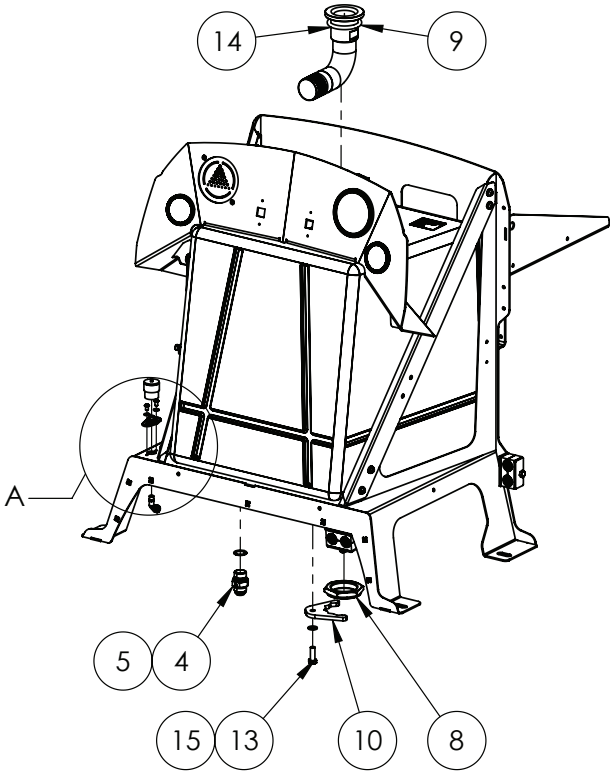

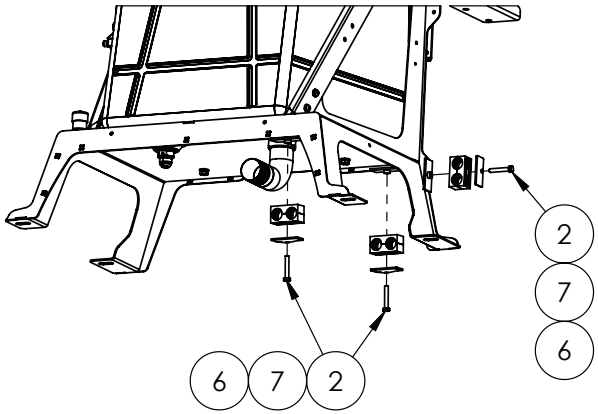

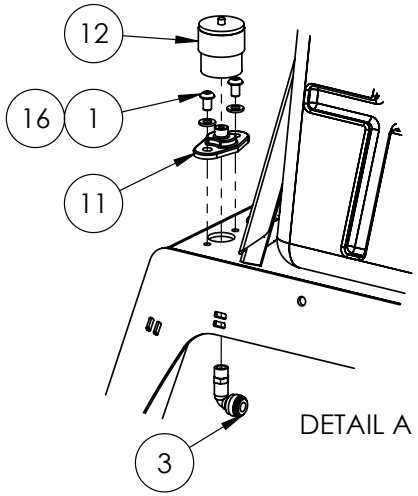

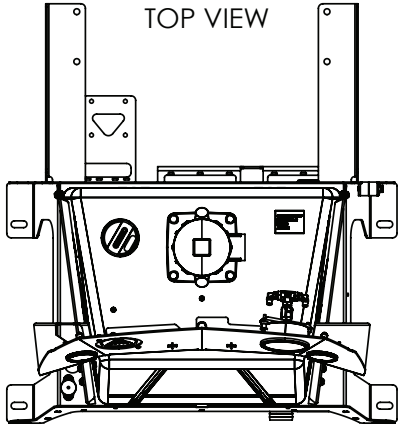

IF DESCRIPTION PREFIX IS ASSEMBLY DRAWING ONLY OR PRODUCTION DRAWING ONLY THE ITEM IS NOT FOR SALE			
ITEM	PART NUMBER	DESCRIPTION	QTY
1	GA5004023	BHCS M6 X 10 SS A2-70	2
2	GA5004727	BOLT M8 X 50 GR8.8 ZP	3
3	GA5045145	ELBOW 6mm BRASS MALE X 1/8" PLASTIC	1
4	GA3500711	HYDRAULIC ADAPTOR NIPPLE, 3/4" BSP O-RING X 1 1/16" JIC, S74-1217	1
5	GA3501865	HYDRAULIC ADDAPTOR, O RING 3/4" BSPP, ROD-BP12	1
6	GA5078036	MOUNTING CLAMP, DOUBLE TYPE, JAW, PAIR, GROUP 3, 25.4mm, RCD-254J	3
7	GA5078046	MOUNTING CLAMP, DOUBLE TYPE, PLATE, TOP, GROUP 3, RCD-3PT	3
8	GA4550350	NUT, BULKHEAD, 2" BSPP SUIT HYDRAULIC FITTING	1
9	GA5072365	O RING, 60 X 8, RUBBER	1
10	GA4413360	PLATE, OIL RESERVOIR SUCTION PORT SUPPORT, G4 MY24	1
11	GA5070470	SERVICE INDICATOR MOUNTING FLANGE	1
12	GA5010525	SERVICE INDICATOR KIT 25, SUIT CROP CRUISER AND G3 G4	1
13	GA5065455	SET SCREW M10 X 30 GR8.8 ZP	1
14	GA4605068	SUCTION BULKHEAD, ELBOW, 2" TUBE	1
15	GA5000117	WASHER M10 FLAT SS HD	1
16	GA5004437	WASHER M6 FLAT SS HD	2
GA6101953-01 GOLDACRES		ASSEMBLY DRAWING ONLY HYDRAULIC OIL RESERVOIR, LF SP S3	REV 00

Gauge & Gauge Light Mounting, Hydraulic Reservoir

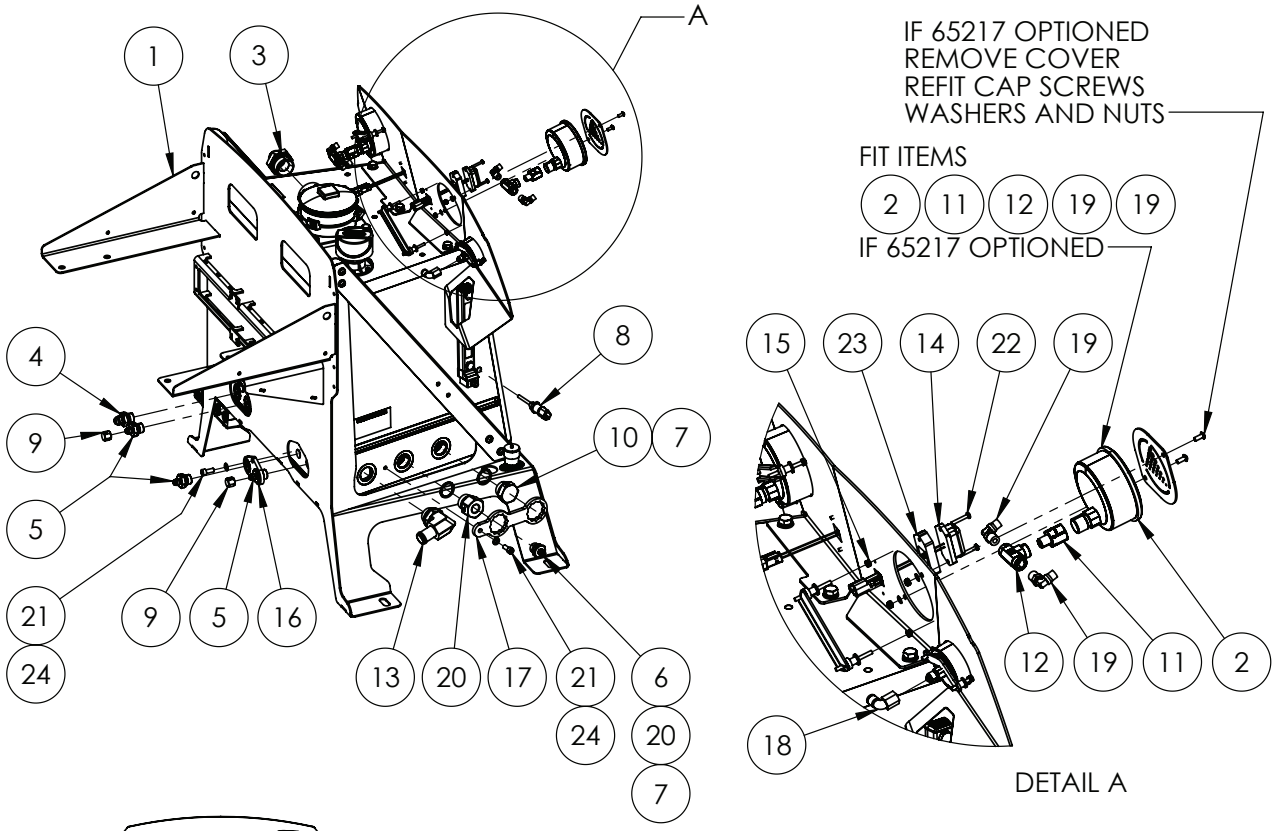

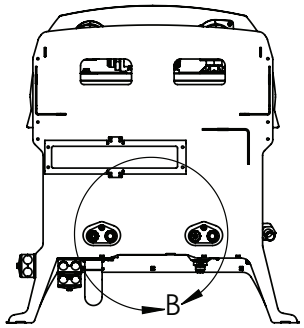

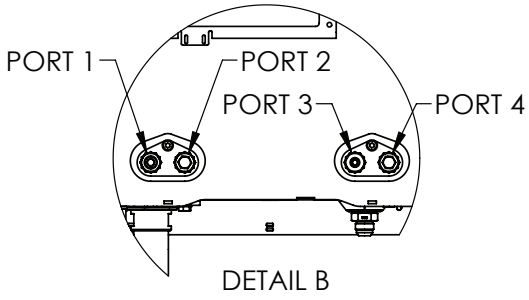

NOTE:

FIT ITEM (9) TO PORT 2 If 70011 OPTIONED

FIT ITEM (9) TO PORT 4 UNLESS 80105 OPTIONED

REFER TORQUE SPECIFICATION DECAL FOR HYDRAULIC FITTINGS AND BOLTS TORQUE VALUES

IF DESCRIPTION PREFIX IS ASSEMBLY DRAWING ONLY OR PRODUCTION DRAWING ONLY THE ITEM IS NOT FOR SALE

ITEM	PART NUMBER	DESCRIPTION	QTY
1	GA6101953-01	ASSEMBLY DRAWING ONLY HYDRAULIC OIL RESERVOIR, LF SP S3	1
2	GA5075420	GAUGE, 100mm, 3/8" BSP REAR PORT, LARGE, 10 BAR, HYDAC	1
3	GA3501864	HYDRAULIC ADAPTOR NIPPLE, 1 1/4" BSPP X 1 5/16" JIC, S74-2021	1
4	GA3500861	HYDRAULIC ADAPTOR NIPPLE, 1/2" BSPP O-RING MALE X 3/4" JIC MALE, S74D-0812	1
5	GA3500860	HYDRAULIC ADAPTOR NIPPLE, 1/2" BSPP O-RING MALE X 9/16" JIC MALE, S74D-0809	3
6	GA3500718	HYDRAULIC ADAPTOR NIPPLE, 1/2" BSPP TO 9/16" JIC	1
7	GA3501866	HYDRAULIC ADAPTOR, O RING 1" BSPP	2
8	GA3000321	HYDRAULIC TEMPERATURE SENSOR, OIL RESERVOIR, HYDAC, HTT 824K-A-050-036	1
9	GA3500793	HYDRAULIC ADAPTOR, CAP, 9/16" JIC FEMALE, S65-09	2
10	GA3501857	HYDRAULIC ADAPTOR, PLUG, 1" BSPP MALE, S73-16	1
11	GA3501312	HYDRAULIC ADAPTOR, STRAIGHT, 1/4" NPT MALE, 3/8" NPT FEMALE	1
12	GA3500242	HYDRAULIC ADAPTOR, TEE, 1/4" BSPT FEMALE X 1/4" BSPT FEMALE X 1/4" BSPT FEMALE	1
13	GA3500774	HYDRAULIC BARB COUPLING, ELBOW, 1" BSPP O-RING, 1" BARB MALE, RA12S-90-1616, HANSA-FLEX	1
14	GA4909315	LED ASSEMBLY, GAUGE LIGHT WITH DEUTSCH CONNECTOR, G4 MY24	2
15	GA5003974	NUT M5 NYLOC ZP	2
16	GA4405270	PLATE, OIL RESERVOIR FRONT PORT SUPPORT A	2
17	GA4000169	PLATE, OIL RESERVOIR SIDE PORT SUPPORT, LF SP S3	1
18	GA7000015	PNEUMATIC FITTING, FEMALE 1/4" BSPP X 8mm PUSH IN, FEMALE STUD ELBOW	1
19	GA5016233	PNEUMATIC FITTING, ELBOW, 90 DEGREE, 1/4 BSP MALE X 6mm PUSH IN TYPE, METAL	2
20	GA3500189	REDUCING BUSH, HYDRAULIC, 1" BSPP O-RING MALE X 1/2" BSPP FEMALE, S102-1608	1
21	GA5004707	SHCS M8 X 20 GR12.9 ZP	3
22	GA5049020	SCREW PAN HEAD M4 X 25 SS A2-70	4
23	GA5026219	SPACER, FOR GAUGE LIGHT GA5075430	2
24	GA5003643	WASHER M8 FLAT SS HD	3
GA6101953-02 GOLDACRES		ASSEMBLY DRAWING ONLY HYDRAULIC OIL RESERVOIR LF SP S3	REV 00.B

Power Distribution Mounting, Hydraulic Reservoir

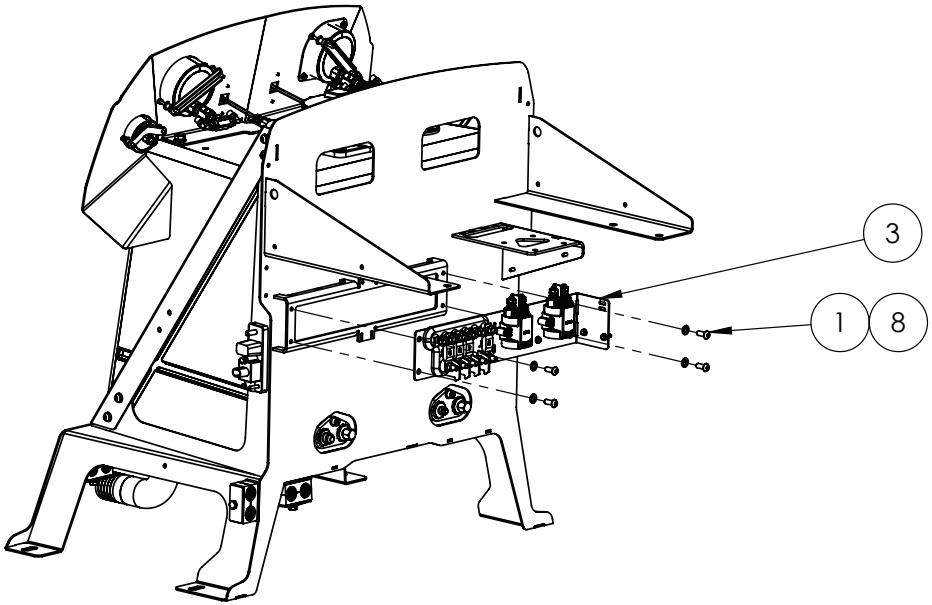

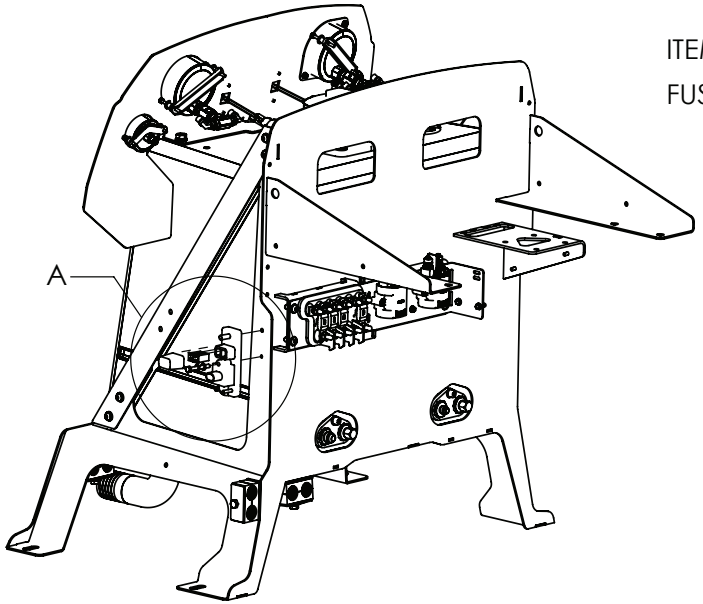

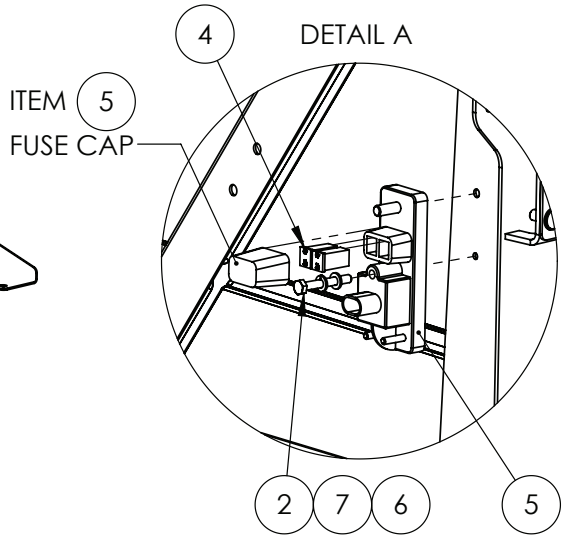

IF DESCRIPTION PREFIX IS ASSEMBLY DRAWING ONLY OR PRODUCTION DRAWING ONLY THE ITEM IS NOT FOR SALE			
ITEM	PART NUMBER	DESCRIPTION	QTY
1	GA0500102	BHCS M8 X 20 SS A2-70	4
2	GA5011449	BOLT M6 X 45 GR8.8 ZP	1
3	GA4909530	ELECTRICAL POWER DISTRUBUTION, ASSEMBLY, FWD OIL COOLER S3	1
4	GA3000337	FUSE, JCASE, 40A	2
5	GA3000331	POWER 60A RELAY MODULE, FUSED, PDM	1
6	GA5004437	WASHER M6 FLAT SS HD	1
7	GA5004447	WASHER M6 SPRING SS	1
8	GA5003651	WASHER M8 FLAT SS	4
GA6101953-03 GOLDACRES		ASSEMBLY DRAWING ONLY HYDRAULIC OIL RESERVOIR LF SP S3	REV 00

Expansion Tank, Fuel Filter & Battery Tray Mounting, Hydraulic Reservoir

REPLACEMENT PARTS			
ITEM	PART NUMBER	DESCRIPTION	QTY
A	GA2700193	FILTER, FUEL, ELEMENT, SECONDARY, CUMMINS B-SERIES, FF63009	-

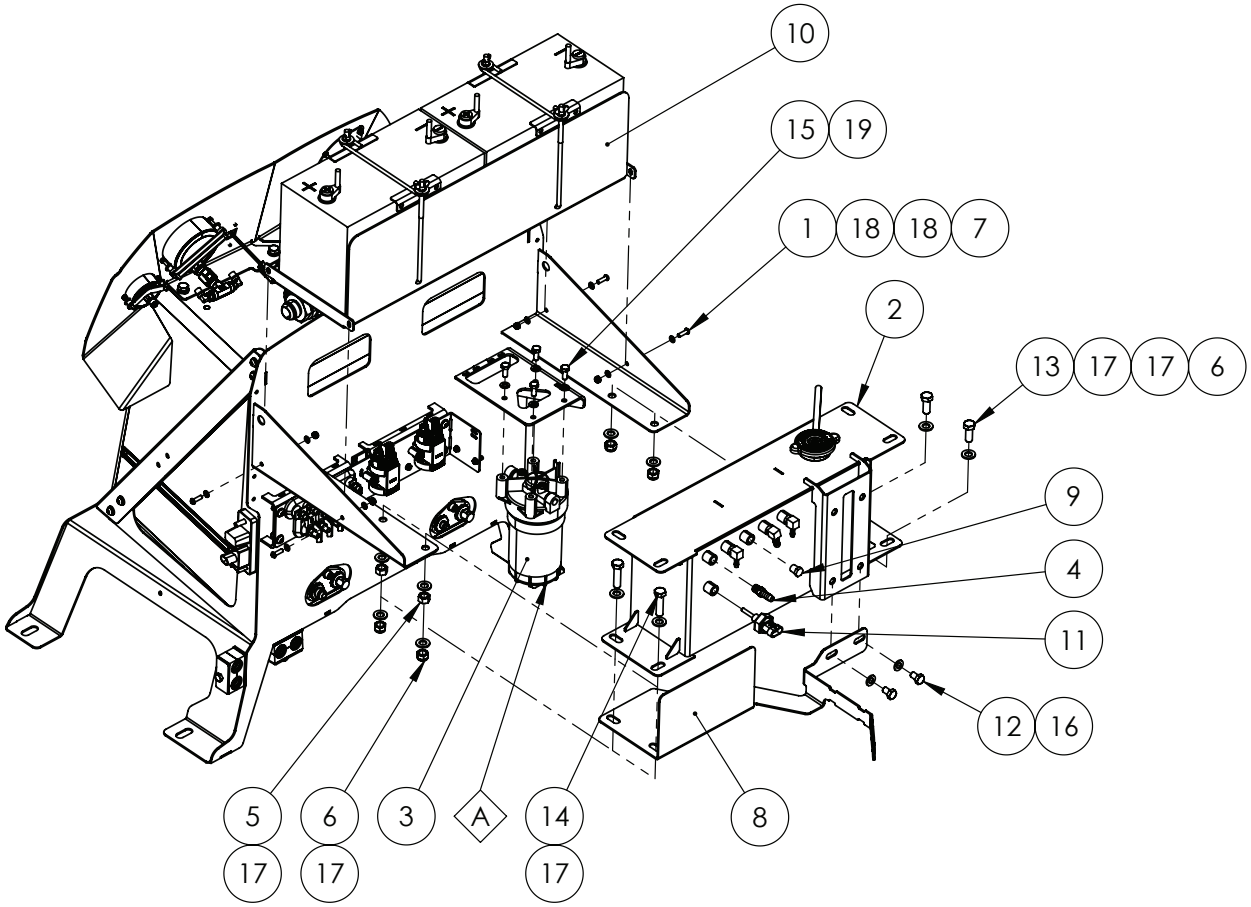

IF DESCRIPTION PREFIX IS ASSEMBLY DRAWING ONLY OR PRODUCTION DRAWING ONLY THE ITEM IS NOT FOR SALE			
ITEM	PART NUMBER	DESCRIPTION	QTY
1	GA5004053	BHCS M6 X 20 SS A2-70	4
2	GA2700146	EXPANSION TANK ASSEMBLY, G4, S2	1
3	GA2700140	FUEL FILTER ASSEMBLY, SECONDARY, INCLUDES FILTER HEAD AND FILTER ELEMENT, 5473458, CUMMINS B-SERIES ENGINE	1
4	GA5050725	HOSETAIL BRASS P3 1/4 THREAD X 3/8 BARB	1
5	GA5000559	NUT M12 HEX ZP	2
6	GA5012461	NUT M12 NYLOC ZP	4
7	GA5048115	NUT M6 NYLOC ZP	4
8	GA4000413	PLATE, COOLANT BLEED HOSE SUPPORT	1
9	GA5069335	PLUG 1/4" BSPT BRASS	1
10	GA4909475	PRODUCTION DRAWING ONLY. BATTERY TRAY ASSEMBLY, SLIDING, DUAL BATTERY, G4 S2, MY24	1
11	GA3000398	SENSOR, LOW COOLANT LEVEL, CUMMINS, SUIT CM2850 ECM	1
12	GA5006143	SET SCREW M10 X 16 GR8.8 ZP	2
13	GA5000305	SET SCREW M12 X 30 GR8.8 ZP	2
14	GA5000327	SET SCREW M12 X 45 GR8.8 ZP	2
15	GA5004085	SET SCREW M8 X 20 GR8.8 ZP	4
16	GA5000117	WASHER M10 FLAT SS HD	2
17	GA5000577	WASHER M12 FLAT SS HD	10
18	GA5004437	WASHER M6 FLAT SS HD	8
19	GA5003643	WASHER M8 FLAT SS HD	4
GA6101953-04 GOLDACRES		ASSEMBLY DRAWING ONLY HYDRAULIC OIL RESERVOIR LF SP S3	REV 00

Battery Tray Assembly, Hydraulic Reservoir

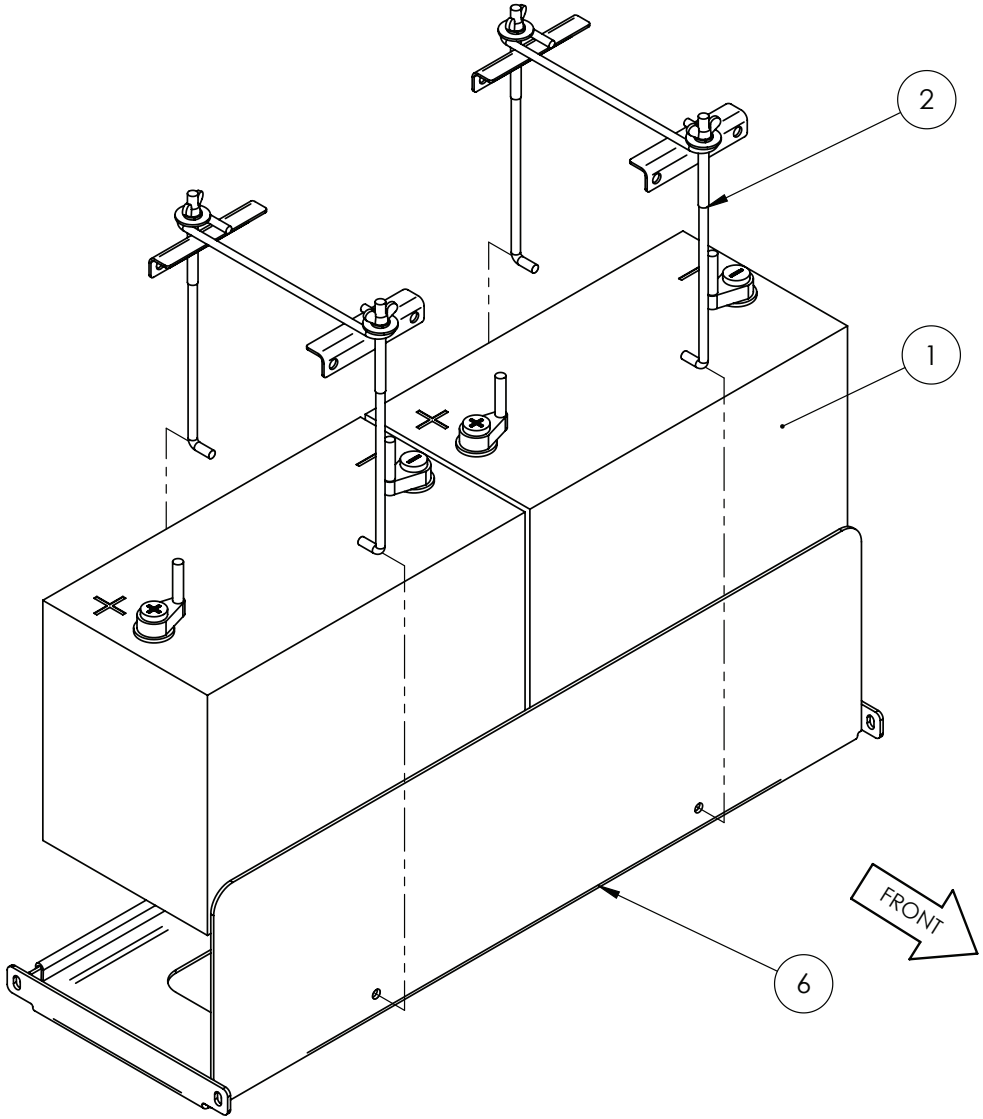

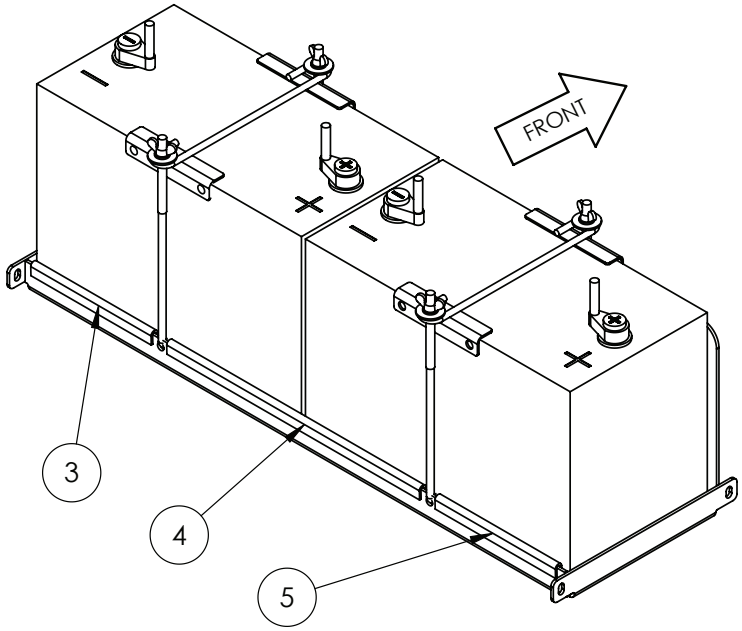

ORIENTATE ITEMS (1) WITH
+ AND - TERMINALS AS SHOWN

IF DESCRIPTION PREFIX IS ASSEMBLY DRAWING ONLY OR PRODUCTION DRAWING ONLY THE ITEM IS NOT FOR SALE			
ITEM	PART NUMBER	DESCRIPTION	QTY
1	GA5066240	BATTERY DELKOR 31-900 T/s QSB	2
2	GA5078572	BATTERY HOLD DOWN CLAMP KIT, PROJECTA	2
3	GA5012985	PINCHWELD, BLACK PLAIN 8mm WIDE X 14mm 50M PER ROLL	0.15
4	GA5012985	PINCHWELD, BLACK PLAIN 8mm WIDE X 14mm 50M PER ROLL	0.315
5	GA5026278	PINCHWELD, BLACK PLAIN 8mm WIDE X 14mm 50M PER ROLL	0.15
6	GA4000172	PLATE, BATTERY TRAY, LF SP S3	1
GA4909475 GOLDACRES		PRODUCTION DRAWING ONLY. BATTERY TRAY ASSEMBLY, SLIDING, DUAL BATTERY, G4 S2, MY24	REV 00

Decals, Hydraulic Reservoir

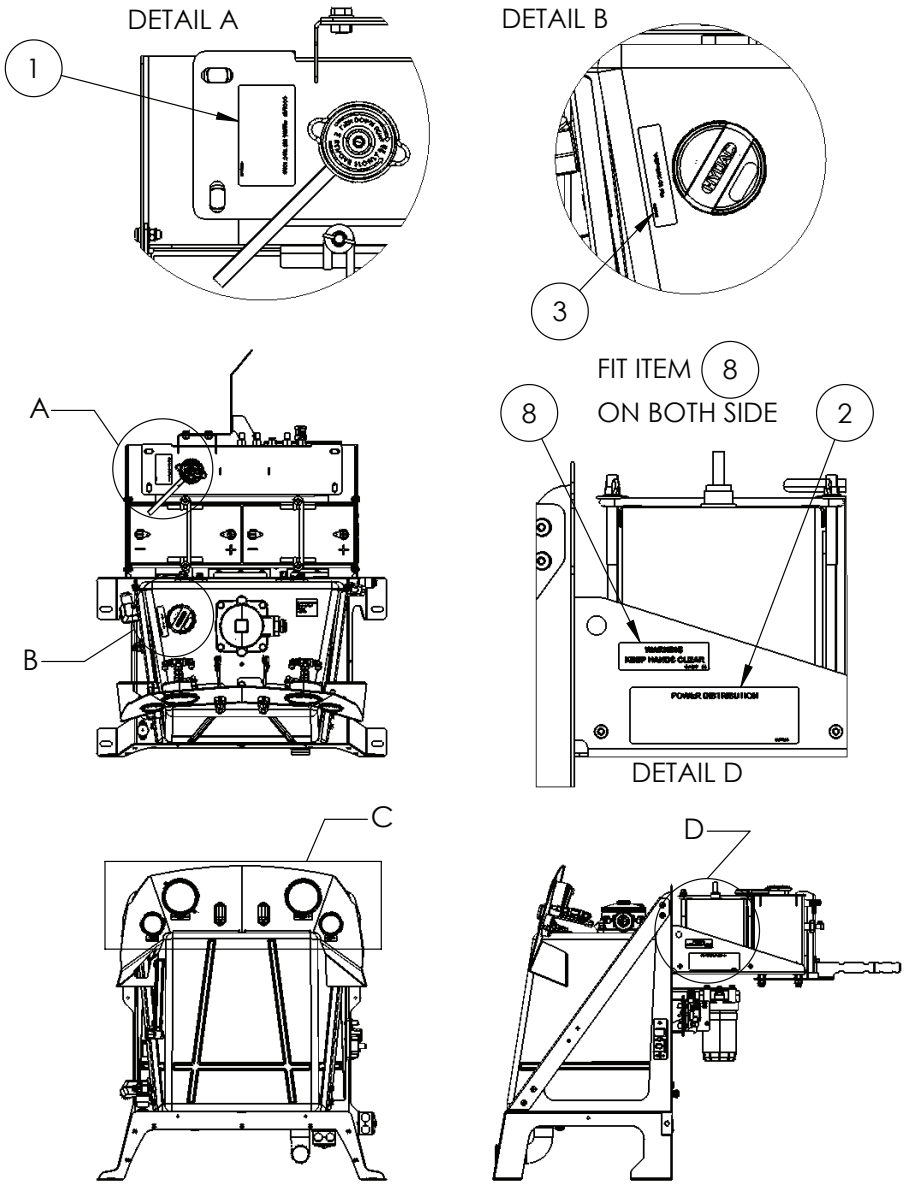

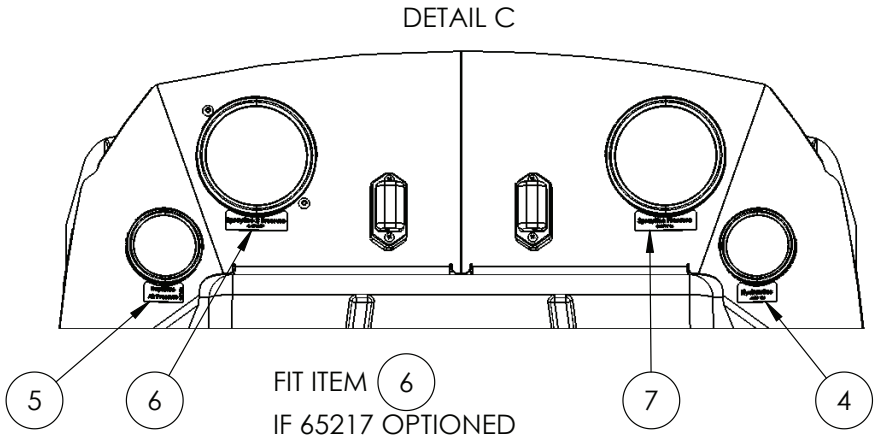

IF DESCRIPTION PREFIX IS ASSEMBLY DRAWING ONLY OR PRODUCTION DRAWING ONLY THE ITEM IS NOT FOR SALE			
ITEM	PART NUMBER	DESCRIPTION	QTY
1	GA8702411	DECAL, AIR DRAIN	1
2	GA8702391	DECAL POWER DISTRIBUTION	1
3	GA8701212	DECAL, HYDRAULIC OIL FILL	1
4	GA8701135	DECAL, HYDRAULICS	1
5	GA8701134	DECAL, RAPIDFIRE AIR PRESSURE	1
6	GA8702359	DECAL, SPRAYLINE 2 PRESSURE	1
7	GA8701136	DECAL, SPRAYLINE PRESSURE	1
8	GA8701128	DECAL, WARNING KEEP HANDS CLEAR	2
GA6101953-05 GOLDACRES		ASSEMBLY DRAWING ONLY, HYDRAULIC OIL RESERVOIR, LF SP S3	REV 00

Tank Breather & Return Filter, Hydraulic Reservoir

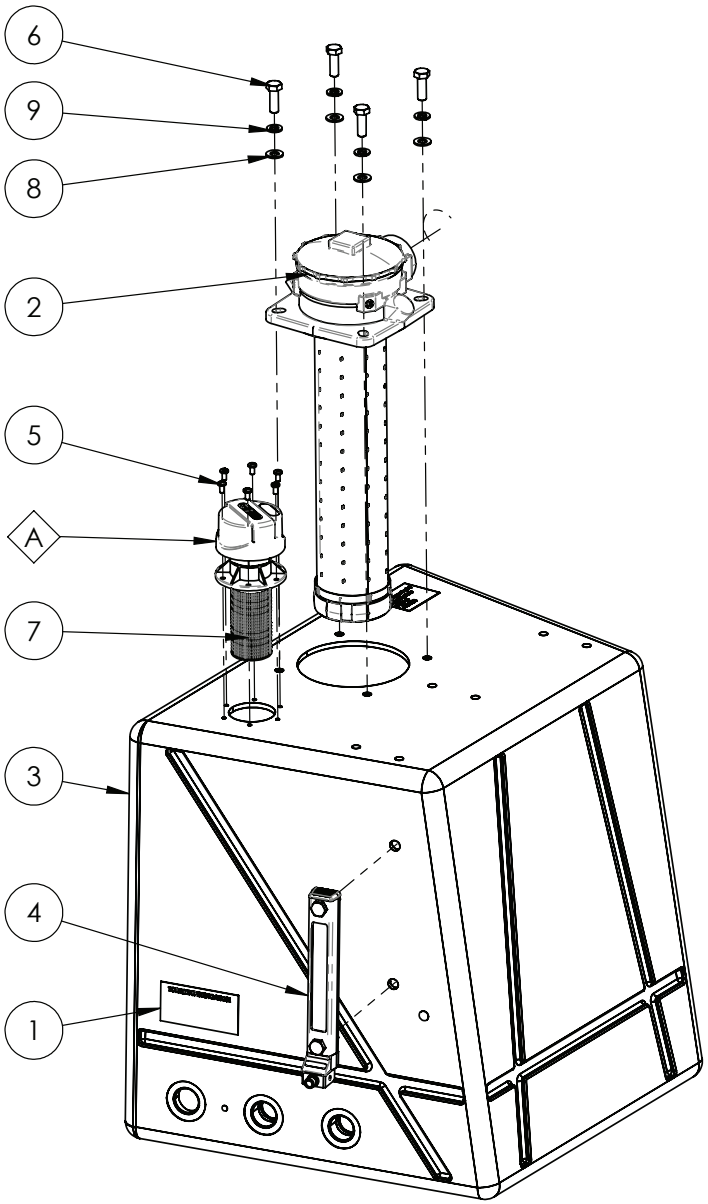

REPLACEMENT PARTS			
ITEM	PART NUMBER	DESCRIPTION	QTY
A	GA5075450	BREATHER FILTER CAP, OIL RESERVOIR FILLER, HYDAC	-

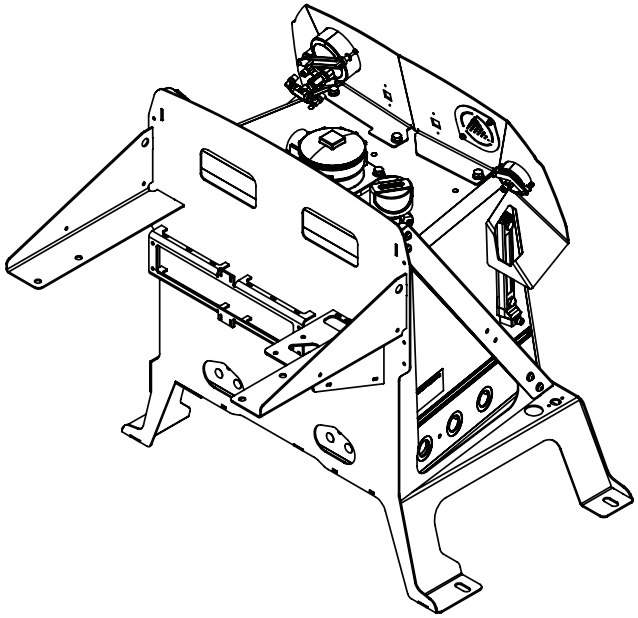

IF DESCRIPTION PREFIX IS ASSEMBLY DRAWING ONLY OR PRODUCTION DRAWING ONLY THE ITEM IS NOT FOR SALE			
ITEM	PART NUMBER	DESCRIPTION	QTY
1	GA5025957-01	DECAL TORQUE SPECIFICATIONS, HYD TANK	1
2	GA3501842	FILTER, RUTURN, HYDAC, 1334727 - RFT USF 210 B E 10 A 0.1	1
3	GA3500692	HYDRAULIC OIL RESERVOIR, BARE, WITH CASE DRAIN PORTS, MY20	1
4	GA3000495	LEVEL GAUGE WITH LOW LEVEL SWITCH - FSK_176_2.4_W_12_SEW	1
5	GA0500099	SCREW PAN HEAD M5 X 10 SS A2-70	6
6	GA5065455	SET SCREW M10 X 30 GR8.8 ZP	4
7	GA5078873	TANK BREATHER FILTER WITH FILLER STRAINER, HYDAC, BREATHER ELF P 30 F W 1.0/-AS	1
8	GA5000117	WASHER M10 FLAT SS HD	4
9	GA5000137	WASHER M10 SPRING SS	4
GA5025957 GOLDACRES		HYDRAULIC OIL RESERVOIR AND FRAME, LF SP S3	REV 01.A

Return Filter Assembly, Hydac

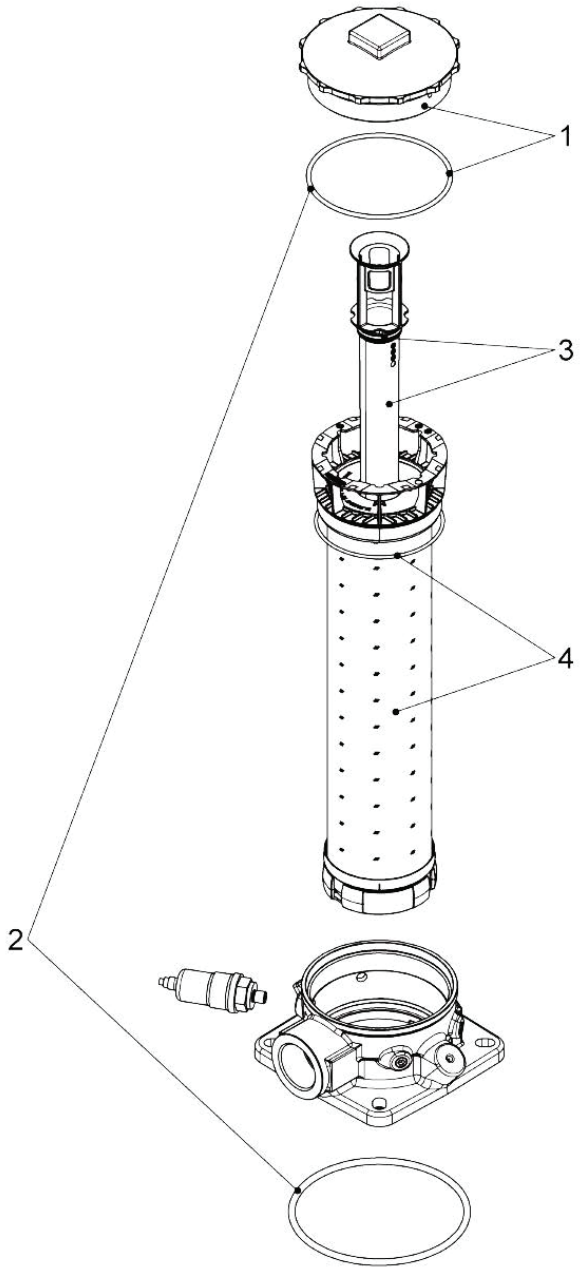

IF DESCRIPTION PREFIX IS ASSEMBLY DRAWING ONLY OR PRODUCTION DRAWING ONLY THE ITEM IS NOT FOR SALE			
ITEM	PART NUMBER	DESCRIPTION	QTY
1	GA3501951	LID, FILTER, HYDRAULIC, WITH GASKET, HYDAC, SUIT, GA3501842	1
2	GA3501952	GASKET, SET OF 2, E-RFT 155/210/260, SUIT, HYDAC, RETURN FILTER, GA3501842	1
3	GA3501953	TUBE, IMMERSION, E-RFT 210, SUIT, HYDAC, FILTER, GA3501842	1
4	GA3501940	FILTER, HYDRAULIC RETURN ELEMENT, DEGASSING	1
GA3501842 GOLDACRES		FILTER, RUTURN, HYDAC, 1334727 - RFT USF 210 B E 10 A 0.1	REV

Frame, Hydraulic Reservoir

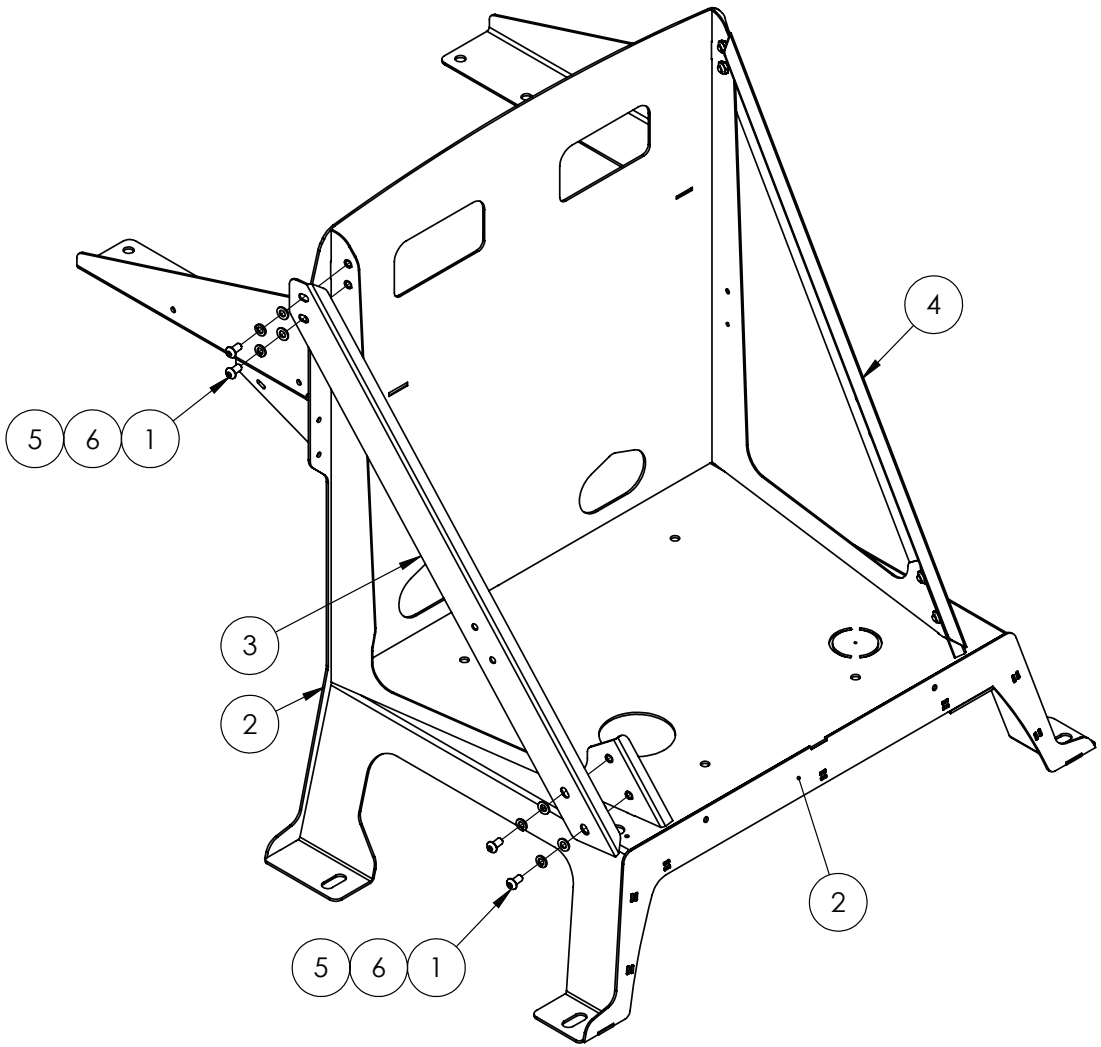

IF DESCRIPTION PREFIX IS ASSEMBLY DRAWING ONLY OR PRODUCTION DRAWING ONLY THE ITEM IS NOT FOR SALE			
ITEM	PART NUMBER	DESCRIPTION	QTY
1	GA5004696	BHCS M8 X 16 SS A2-70	8
2	GA4605033	FRAME, HYDRAULIC OIL RESERVOIR, LF SP S3	1
3	GA4000248	PLATE, OIL RESERVOIR GUSSET, BOLT ON, LH, LF SP S3	1
4	GA4000249	PLATE, OIL RESERVOIR GUSSET, BOLT ON, RH, LF SP S3	1
5	GA5003643	WASHER M8 FLAT SS HD	8
6	GA5004919	WASHER M8 SPRING SS	8
GA5025957 GOLDACRES		HYDRAULIC OIL RESERVOIR AND FRAME, LF SP S3	REV 01.A

Gauge Assembly, Hydraulic Reservoir

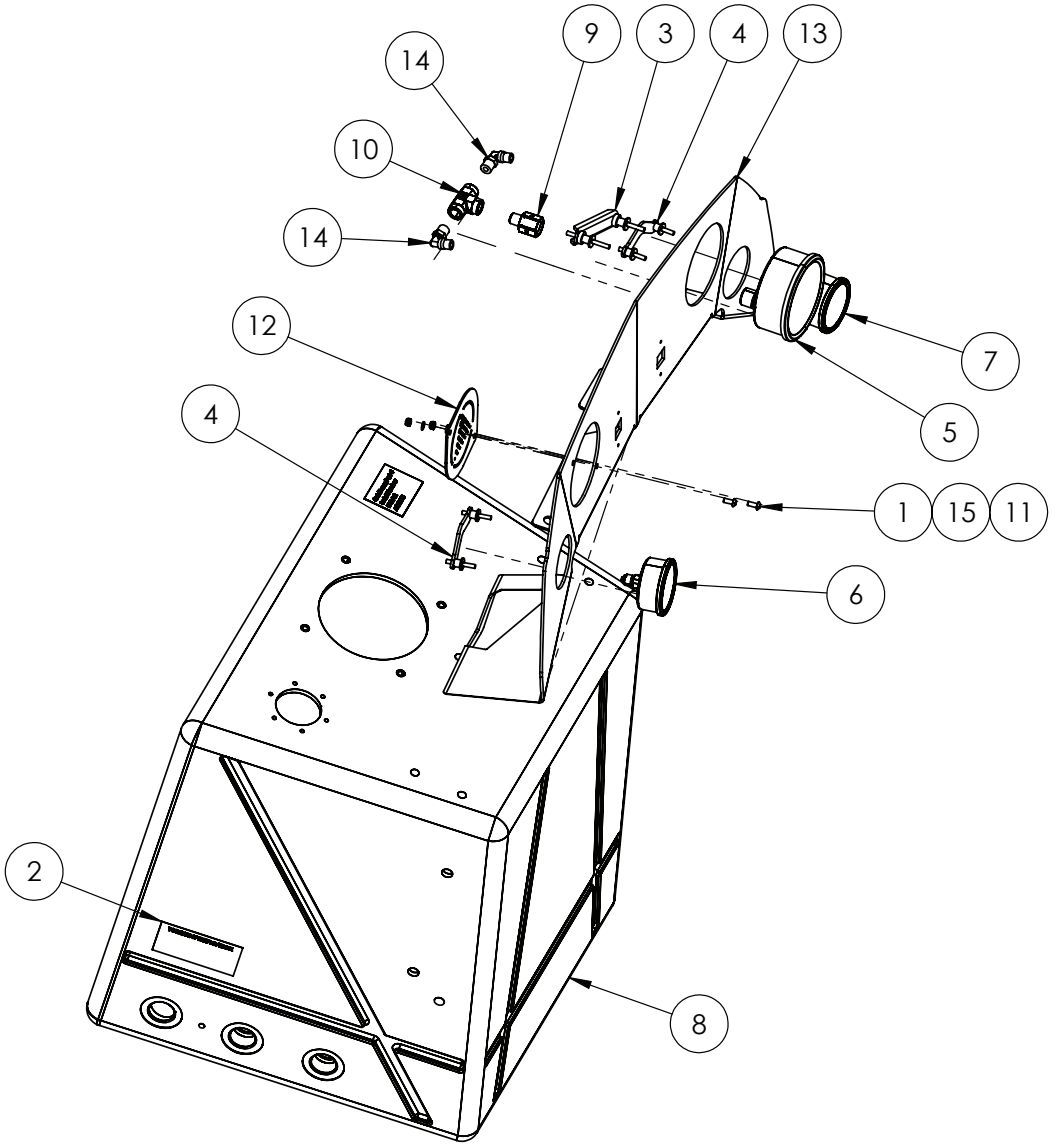

IF DESCRIPTION PREFIX IS ASSEMBLY DRAWING ONLY OR PRODUCTION DRAWING ONLY THE ITEM IS NOT FOR SALE			
ITEM	PART NUMBER	DESCRIPTION	QTY
1	GA0500092	BHCS M5 X 12 SS A2-70	2
2	GA5025957-01	DECAL TORQUE SPECIFICATIONS, HYD TANK	1
3	GA5075460	GAUGE RETAINER, MOUNTING BRACKET, 100mm GAUGE, HYDAC	1
4	GA5075455	GAUGE RETAINER, MOUNTING BRACKET, 63mm GAUGE, HYDAC	2
5	GA5075420	GAUGE, 100mm, 3/8" BSP REAR PORT, LARGE, 10 BAR, HYDAC	1
6	GA3500693	GAUGE, 63mm, 1/4" BSP REAR PORT, SMALL, 160 PSI 10 BAR HYDAC	1
7	GA5075425	GAUGE, 63mm, 1/4" BSP REAR PORT, SMALL, 3500 PSI 250 BAR HYDAC	1
8	GA3500692	HYDRAULIC OIL RESERVOIR, BARE, WITH CASE DRAIN PORTS, MY20	1
9	GA3501312	HYDRAULIC ADAPTOR, STRAIGHT, 1/4" NPT MALE, 3/8" NPT FEMALE	1
10	GA3500242	Hydraulic adaptor, Tee, 1/4" BSPT female x 1/4" BSPT female x 1/4" BSPT female	1
11	GA5003974	NUT M5 NYLOC ZP	2
12	GA4000250	PLATE, GAUGE HOLE COVER, OIL TANK, LF SP S3	1
13	GA4000199	PLATE, OIL TANK GAUGE PANEL, LF SP S3	1
14	GA5016233	PNEUMATIC FITTING, ELBOW, 90 DEGREE, 1/4 BSP MALE X 6mm PUSH IN TYPE, METAL	2
15	GA5003983	WASHER M5 FLAT SS	2
GA5025957 GOLDACRES		HYDRAULIC OIL RESERVOIR AND FRAME, LF SP S3	REV 01.A

Gauge Plate & Tank Mounting, Hydraulic Reservoir

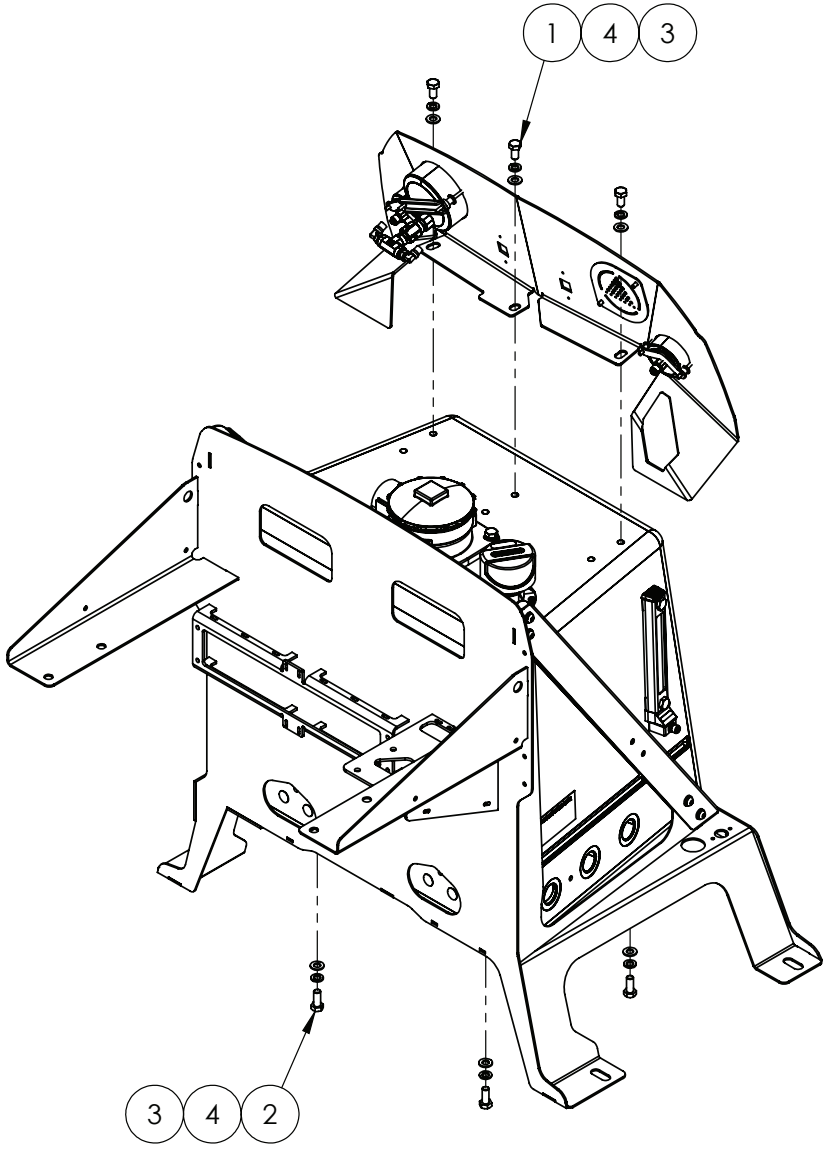

IF DESCRIPTION PREFIX IS ASSEMBLY DRAWING ONLY OR PRODUCTION DRAWING ONLY THE ITEM IS NOT FOR SALE			
ITEM	PART NUMBER	DESCRIPTION	QTY
1	GA5006113	SET SCREW M10 X 20 GR8.8 ZP	3
2	GA5006161	SET SCREW M10 X 25 GR8.8 ZP	3
3	GA5000117	WASHER M10 FLAT SS HD	6
4	GA5000137	WASHER M10 SPRING SS	6
GA5025957 GOLDACRES		HYDRAULIC OIL RESERVOIR AND FRAME, LF SP S3	REV 01.A

Hydraulic Manifold Assembly, Chassis Control

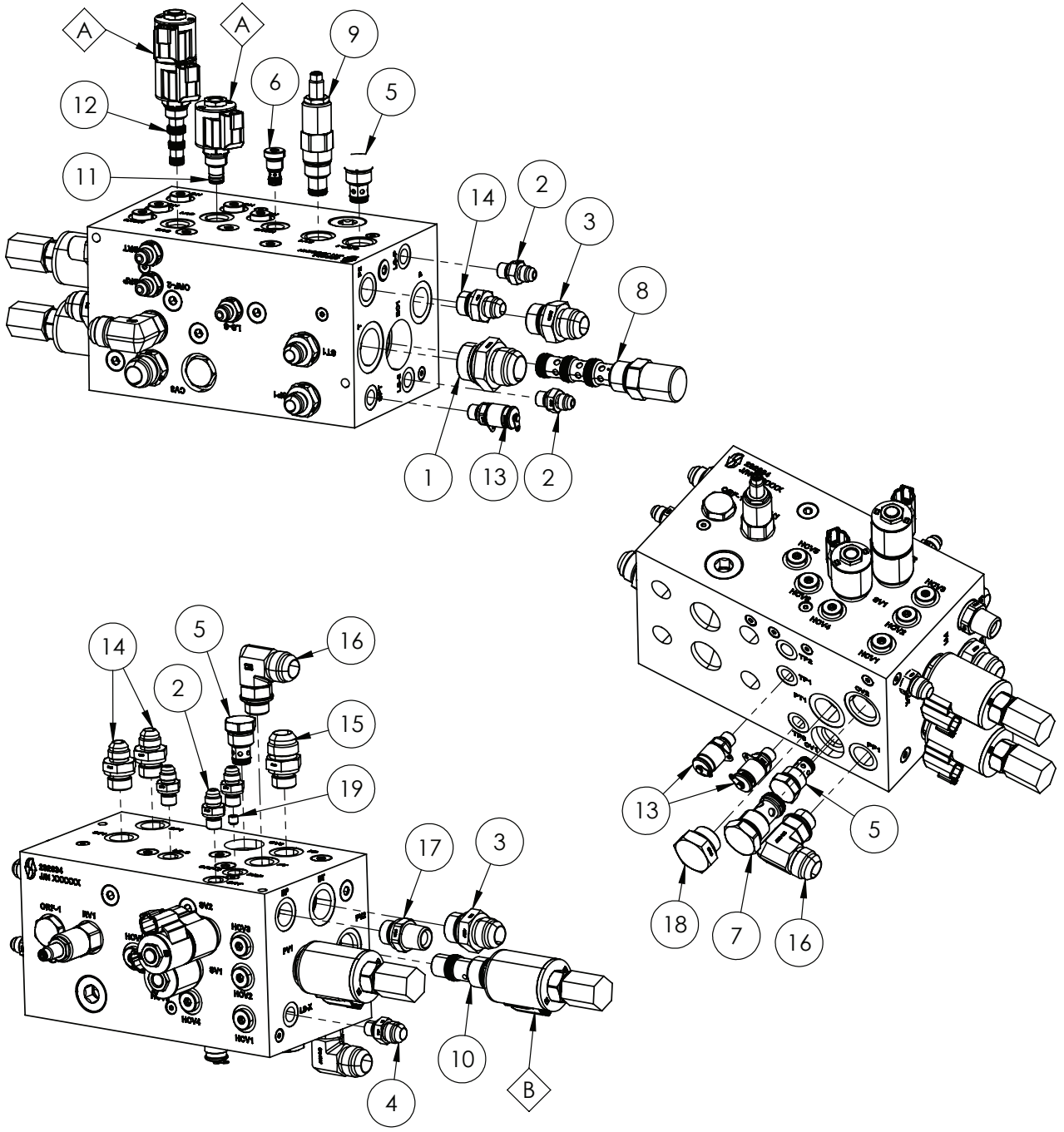

REPLACEMENT PARTS			
ITEM	PART NUMBER	DESCRIPTION	QTY
A	GA3000579	COIL, 12V DC, OILPATH, 4303612	3
B	GA3000578	COIL, 12V DC, OILPATH, 4303212	2

IF DESCRIPTION PREFIX IS ASSEMBLY DRAWING ONLY OR PRODUCTION DRAWING ONLY THE ITEM IS NOT FOR SALE			
ITEM	PART NUMBER	DESCRIPTION	QTY
1	GA5026082	HYDRAULIC ADAPTOR NIPPLE, 1" BSP O-RING X 1 5/16" JIC, S74-1621	1
2	GA3500544	HYDRAULIC ADAPTOR NIPPLE, 1/4" BSP O-RING X 9/16" JIC, S74-0409	5
3	GA3500711	HYDRAULIC ADAPTOR NIPPLE, 3/4" BSP O-RING X 1 1/16" JIC, S74-1217	2
4	GA3501089	HYDRAULIC ADAPTOR, 1/4" BSPP MALE X 3/4" JIC MALE, S74-0412	1
5	GA3500884	HYDRAULIC CARTRIDGE, CHECK VALVE, OILPATH, CV10-20-0-N-05	3
6	GA3500914	HYDRAULIC CARTRIDGE, CHECK VALVE, OILPATH, HVC06-20-0-U-05	6
7	GA3501921	HYDRAULIC CARTRIDGE, CHECK VALVE, OILPATH, VCV12-90-10	1
8	GA3500905	HYDRAULIC CARTRIDGE, COMPENSATOR, PRIORITY VALVE, OILPATH, EC12-43-0-N-160-0.9	1
9	GA3501922	HYDRAULIC CARTRIDGE, PRESSURE REDUCING, OILPATH, RV50-26A-0-P-20/M220	1
10	GA3501193	HYDRAULIC CARTRIDGE, PROPORTIONAL VALVE, OILPATH, PV72-20AG-0-N-12ER	2
11	GA3500912	HYDRAULIC CARTRIDGE, SOLENOID VALVE, OILPATH, SV08-26-0-N-00	1
12	GA3500913	HYDRAULIC CARTRIDGE, SOLENOID VALVE, OILPATH, SV08-47C-0-N-00	1
13	GA3500133	HYDRAULIC COUPLING, EASY TEST POINT, 1/4" BSPP	3
14	GA3500303	HYDRAULIC ADAPTER, NIPPLE, 1/2" BSPP O-RING MALE X 3/4" JIC MALE, S74-0812	3
15	GA3500720	HYDRAULIC ADAPTER, NIPPLE, 1/2" BSPP O-RING MALE X 1 1/16" JIC MALE, S74-0817	1
16	GA3500723	HYDRAULIC ADAPTOR, ELBOW, 90 DEGREE, 1 1/16" JIC MALE X 1/2" BSPP MALE O-RING, S76-0817	2
17	GA3500310	HYDRAULIC ADAPTOR, NIPPLE, 1/2" BSPT MALE X 1/2" BSPP MALE	1
18	GA3500302	HYDRAULIC ADAPTOR, PLUG, 3/4" BSPP MALE, S73-12	1
19	GA3500847	PLUG, ORIFICE, 1/16 NPT X 0.5mm	1
GA3501794 GOLDACRES		HYDRAULIC MANIFOLD, CHASSIS, LFSP S3, MY25	REV 03

Hydraulic Manifold Assembly, Chassis Control, Function Table

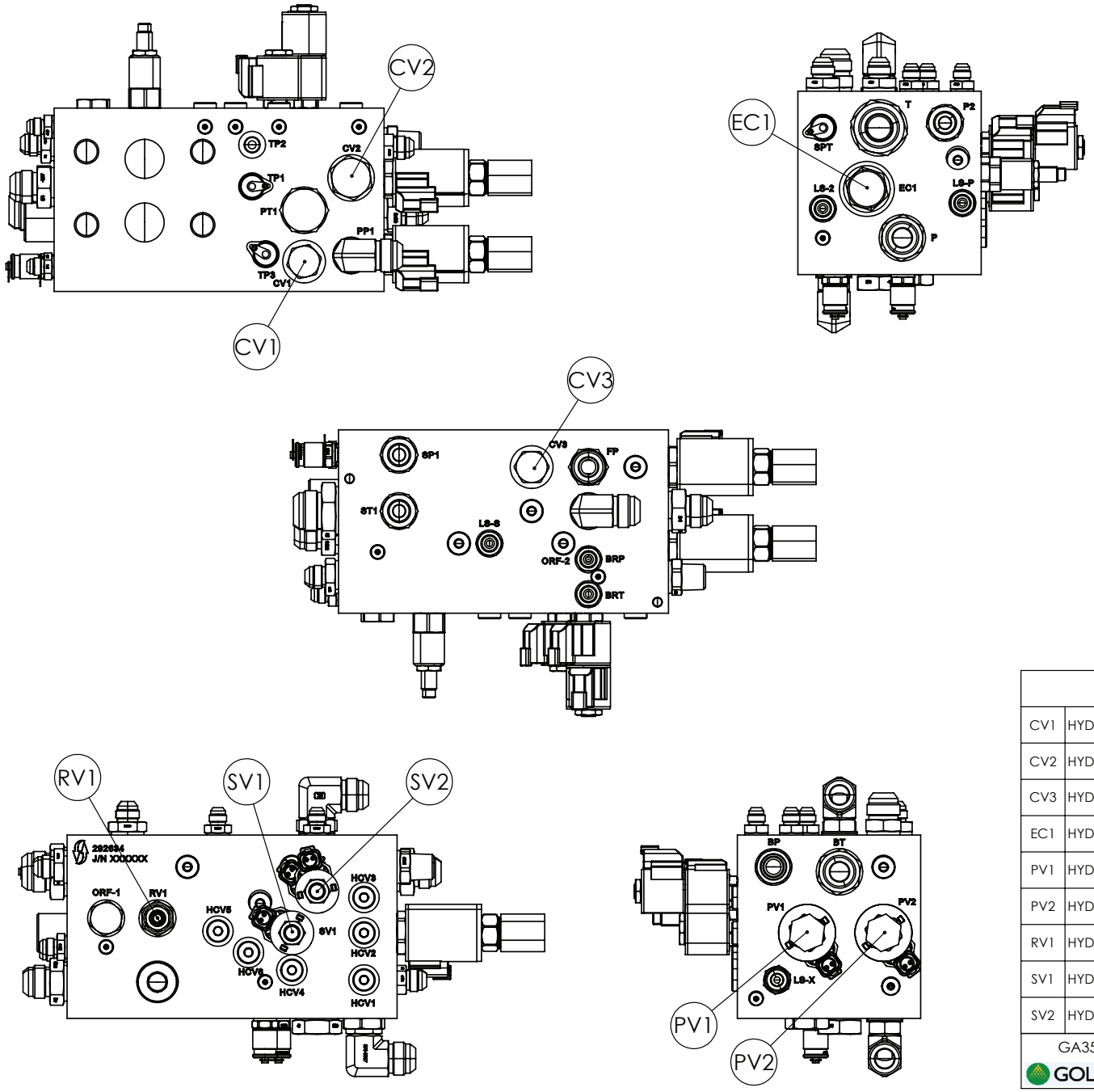

FUNCTION TABLE	
CV1	HYDRAULIC CARTRIDGE, CHECK VALVE - SPRAY PUMP
CV2	HYDRAULIC CARTRIDGE, CHECK VALVE - SPRAY PUMP
CV3	HYDRAULIC CARTRIDGE, CHECK VALVE - FILL PUMP
EC1	HYDRAULIC CARTRIDGE, COMPENSATOR - STEERING
PV1	HYDRUALIC CARTRIDGE, PROPORTIONAL VALVE - SPRAY PUMP
PV2	HYDRUALIC CARTRIDGE, PROPORTIONAL VALVE - FILL PUMP
RV1	HYDRUALIC CARTRIDGE, PRESSURE REDUCING VALVE
SV1	HYDRAULIC CARTRIDGE, SOLENOID VALVE - LOAD SENSE
SV2	HYDRAULIC CARTRIDGE, SOLENOID VAVLVE - BOOM REST

GA3501794 GOLDACRES	HYDRAULIC MANIFOLD, CHASSIS, LFSP S3, MY25	REV 03

Hydraulic Pressure Filter

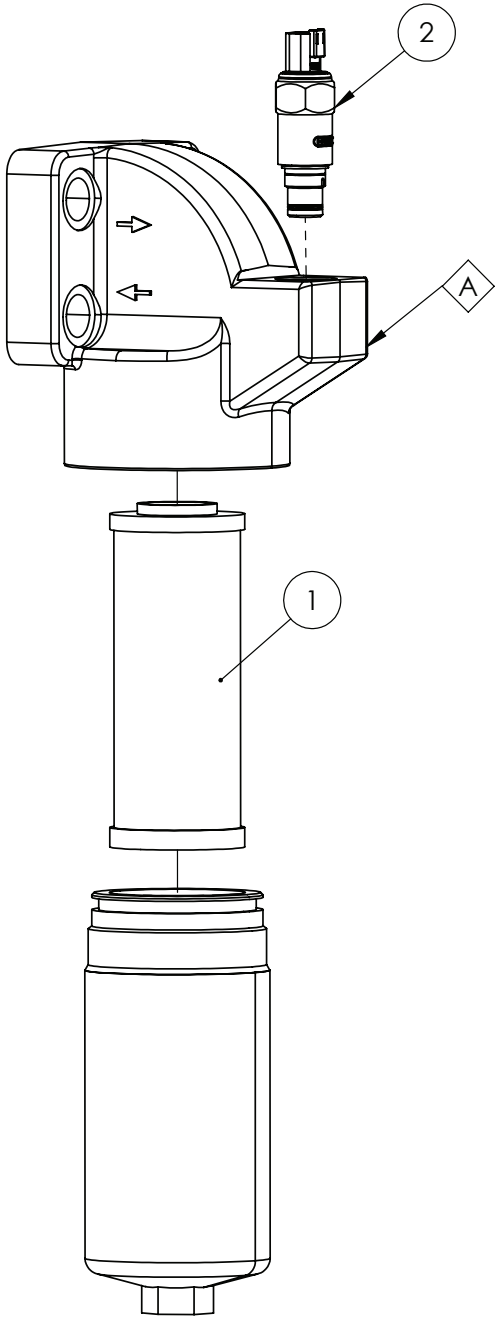

REPLACEMENT PARTS			
ITEM	PART NUMBER	DESCRIPTION	QTY
A	GA3501116	REPAIR SEAL KIT, HYDRAULIC PRESSURE FILTER, PRO S2, HYDAC, 305264	-

IF DESCRIPTION PREFIX IS ASSEMBLY DRAWING ONLY OR PRODUCTION DRAWING ONLY THE ITEM IS NOT FOR SALE			
ITEM	PART NUMBER	DESCRIPTION	QTY
1	GA3501114	FILTER ELEMENT, HYDRAULIC PRESSURE FILTER, PRO, S2, HYDAC, 1250491	1
2	GA3000542	SENSOR, CLOGGING INDICATOR, ELECTRONIC, HYDRAULIC PRESSURE FILTER, HYDAC	1
GA3500709 GOLDACRES		HYDRAULIC PRESSURE FILTER ASSEMBLY, 10 MICRON, 4 BOLT FLANGE MOUNT, 6 BAR BYPASS, ELECTRONIC CLOGGING INDICATOR, DF240, HYDAC	REV 00

Hydraulic Manifold Assembly, Boom Control, Front View LH Side

FRONT VIEW - LH SIDE

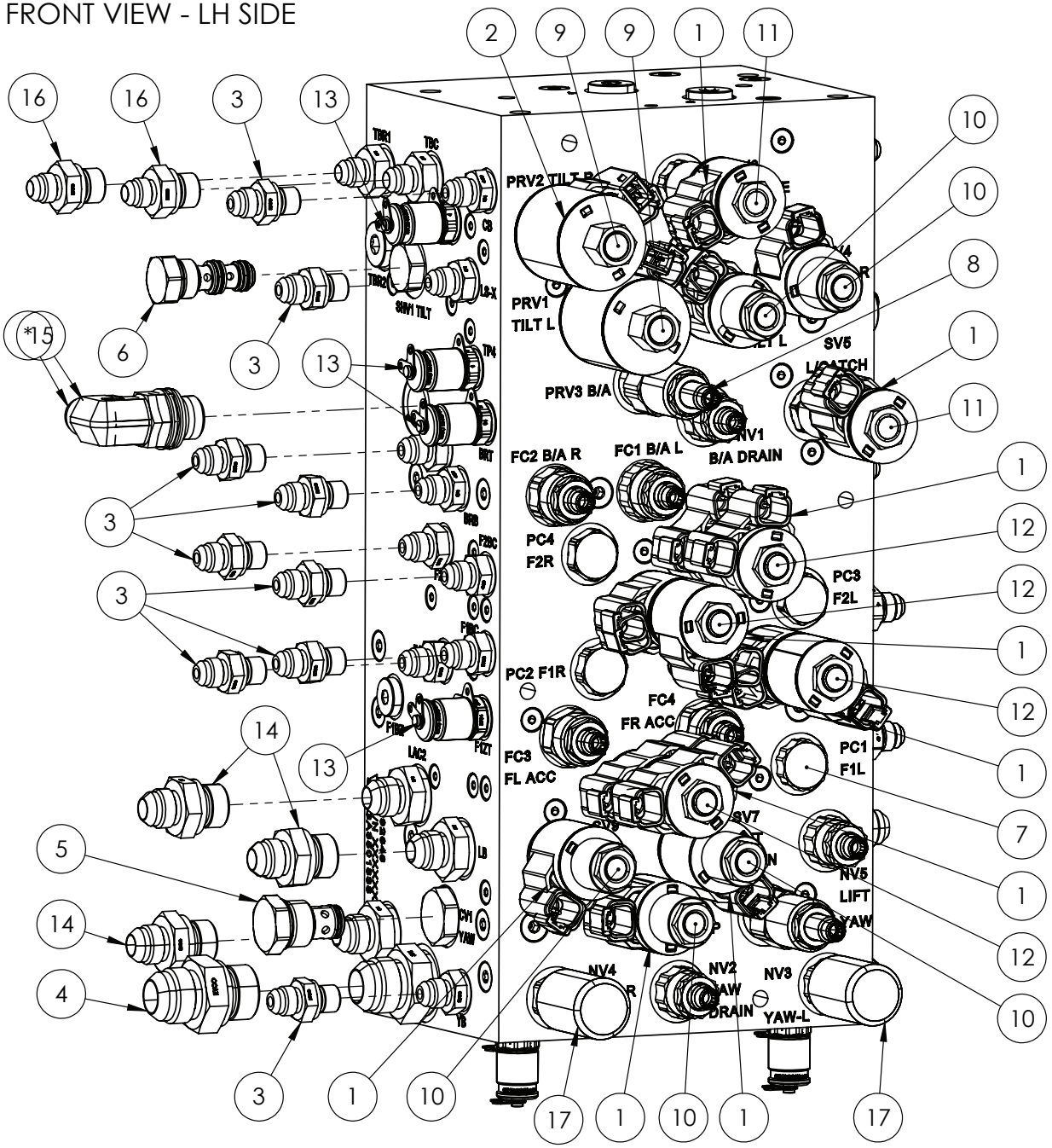

IF DESCRIPTION PREFIX IS ASSEMBLY DRAWING ONLY OR PRODUCTION DRAWING ONLY THE ITEM IS NOT FOR SALE			
ITEM	PART NUMBER	DESCRIPTION	QTY
1	GA3000579	COIL, 12V DC, OILPATH, 4303612	15
2	GA3000577	COIL, 12V DC, OILPATH, 4303712	2
3	GA3500544	HYDRAULIC ADAPTOR NIPPLE, 1/4" BSP O-RING X 9/16" JIC, S74-0409	17
4	GA3500711	HYDRAULIC ADAPTOR NIPPLE, 3/4" BSP O-RING X 1 1/16" JIC, S74-1217	1
5	GA3500884	HYDRAULIC CARTRIDGE, CHECK VALVE, OILPATH, CV10-20-0-N-05	2
6	GA3501957	HYDRAULIC CARTRIDGE, CHECK VALVE, OILPATH, LS08-30-0-N	1
7	GA3501110	HYDRAULIC CARTRIDGE, DOUBLE PILOT CHECK VALVE, OILPATH, DC08-40-0-N-25	4
8	GA3500891	HYDRAULIC CARTRIDGE, PRESSURE REDUCING VALVE, OILPATH, PR58-38A-0-P-20	2
9	GA3501960	HYDRAULIC CARTRIDGE, PRESSURE RELIEVING PROPORTIONAL VALVE, OILPATH, TS10-36A-0-N-00	2
10	GA3501197	HYDRAULIC CARTRIDGE, SOLENOID VALVE, DCV, OILPATH, SV08-28-0-N-12ER	5
11	GA3501959	HYDRAULIC CARTRIDGE, SOLENOID VALVE, DCV, OILPATH, SV08-47D-0-N-00	3
12	GA3501956	HYDRAULIC CARTRIDGE, SOLENOID VALVE, OILPATH, SP08-47D-0-N-00	4
13	GA3500133	HYDRAULIC COUPLING, EASY TEST POINT, 1/4" BSPP	7
14	GA3500303	HYDRAULIC ADAPTER, NIPPLE, 1/2" BSPP O-RING MALE X 3/4" JIC MALE, S74-0812	5
15	GA3500722	HYDRAULIC ADAPTOR, ELBOW, 90 DEGREE, 3/4" JIC MALE X 1/2" BSPP MALE O-RING, S76-0812	1
16	GA3500145	HYDRAULIC ADAPTOR, NIPPLE, 3/8" BSPP O-RING MALE X 9/16" JIC MALE, S74-0609	4
17	GA3501893	NEEDLE VALVE - HAND KNOB ADJUSTMENT, 350 BAR, 15 L/MIN	2
18	GA3501961	VALVE, CONTROL, HYDRAULIC, NV08-20A-0-N	3
19	GA3501962	VALVE, NEEDLE, HYDRAULIC, FC10-20A-0-N	4
GA3501838 GOLDACRES		HYDRAULIC MANIFOLD, BOOM, LFSP S3, MY25	REV 04

Hydraulic Manifold Assembly, Boom Control, Front View RH Side

FRONT VIEW - RH SIDE

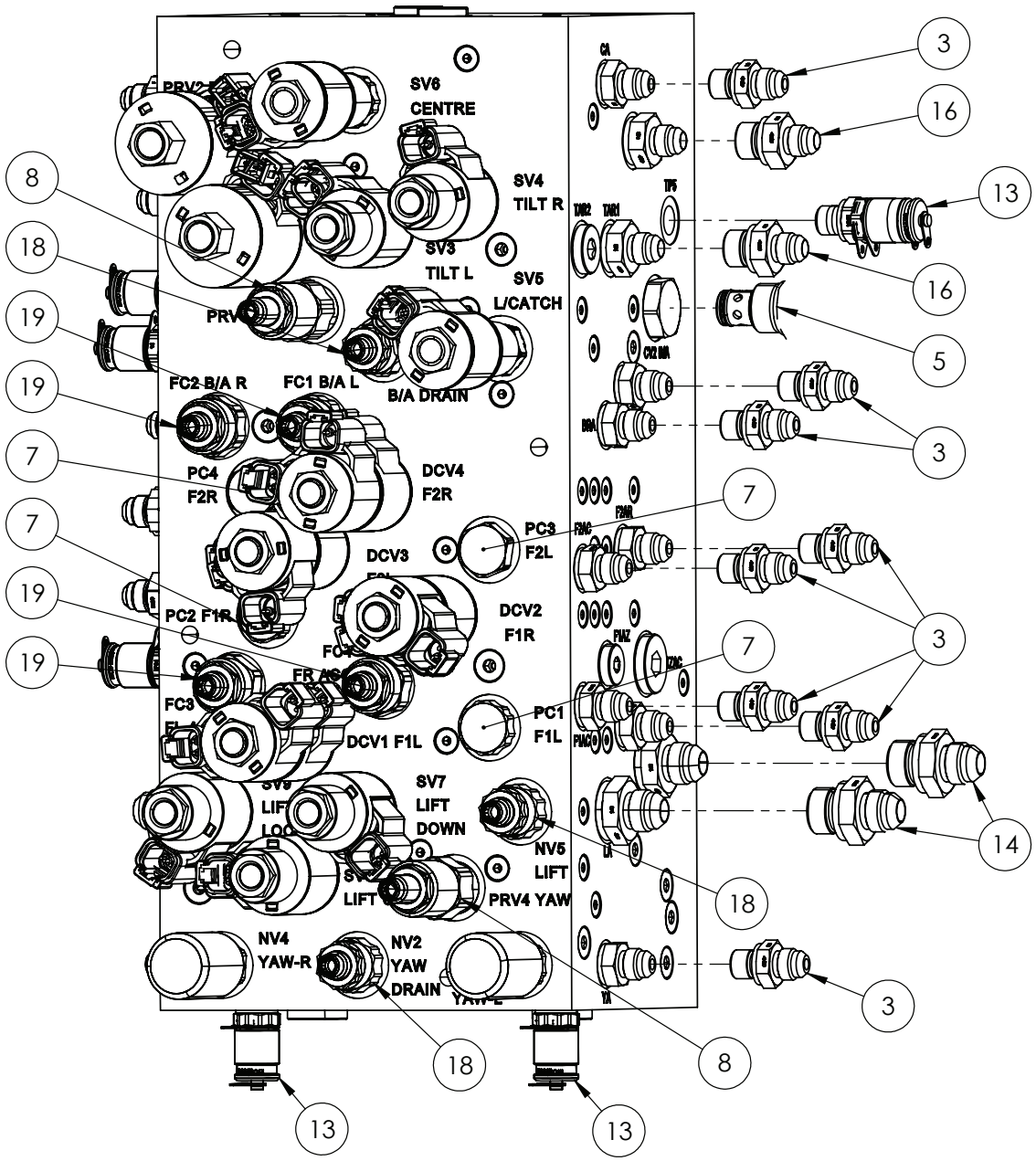

IF DESCRIPTION PREFIX IS ASSEMBLY DRAWING ONLY OR PRODUCTION DRAWING ONLY THE ITEM IS NOT FOR SALE			
ITEM	PART NUMBER	DESCRIPTION	QTY
1	GA3000579	COIL, 12V DC, OILPATH, 4303612	15
2	GA3000577	COIL, 12V DC, OILPATH, 4303712	2
3	GA3500544	HYDRAULIC ADAPTOR NIPPLE, 1/4" BSP O-RING X 9/16" JIC, S74-0409	17
4	GA3500711	HYDRAULIC ADAPTOR NIPPLE, 3/4" BSP O-RING X 1 1/16" JIC, S74-1217	1
5	GA3500884	HYDRAULIC CARTRIDGE, CHECK VALVE, OILPATH, CV10-20-0-N-05	2
6	GA3501957	HYDRAULIC CARTRIDGE, CHECK VALVE, OILPATH, LS08-30-0-N	1
7	GA3501110	HYDRAULIC CARTRIDGE, DOUBLE PILOT CHECK VALVE, OILPATH, DC08-40-0-N-25	4
8	GA3500891	HYDRAULIC CARTRIDGE, PRESSURE REDUCING VALVE, OILPATH, PR58-38A-0-P-20	2
9	GA3501960	HYDRAULIC CARTRIDGE, PRESSURE RELIEVING PROPORTIONAL VALVE, OILPATH, TS10-36A-0-N-00	2
10	GA3501197	HYDRAULIC CARTRIDGE, SOLENOID VALVE, DCV, OILPATH, SV08-28-0-N-12ER	5
11	GA3501959	HYDRAULIC CARTRIDGE, SOLENOID VALVE, DCV, OILPATH, SV08-47D-0-N-00	3
12	GA3501956	HYDRAULIC CARTRIDGE, SOLENOID VALVE, OILPATH, SP08-47D-0-N-00	4
13	GA3500133	HYDRAULIC COUPLING, EASY TEST POINT, 1/4" BSPP	7
14	GA3500303	HYDRAULIC ADAPTER, NIPPLE, 1/2" BSPP O-RING MALE X 3/4" JIC MALE, S74-0812	5
15	GA3500722	HYDRAULIC ADAPTOR, ELBOW, 90 DEGREE, 3/4" JIC MALE X 1/2" BSPP MALE O-RING, S76-0812	1
16	GA3500145	HYDRAULIC ADAPTOR, NIPPLE, 3/8" BSPP O-RING MALE X 9/16" JIC MALE, S74-0609	4
17	GA3501893	NEEDLE VALVE - HAND KNOB ADJUSTMENT, 350 BAR, 15 L/MIN	2
18	GA3501961	VALVE, CONTROL, HYDRAULIC, NV08-20A-0-N	3
19	GA3501962	VALVE, NEEDLE, HYDRAULIC, FC10-20A-0-N	4
GA3501838 GOLDACRES		HYDRAULIC MANIFOLD, BOOM, LFSP S3, MY25	REV 04

Hydraulic Manifold Assembly, Boom Control, Function Table

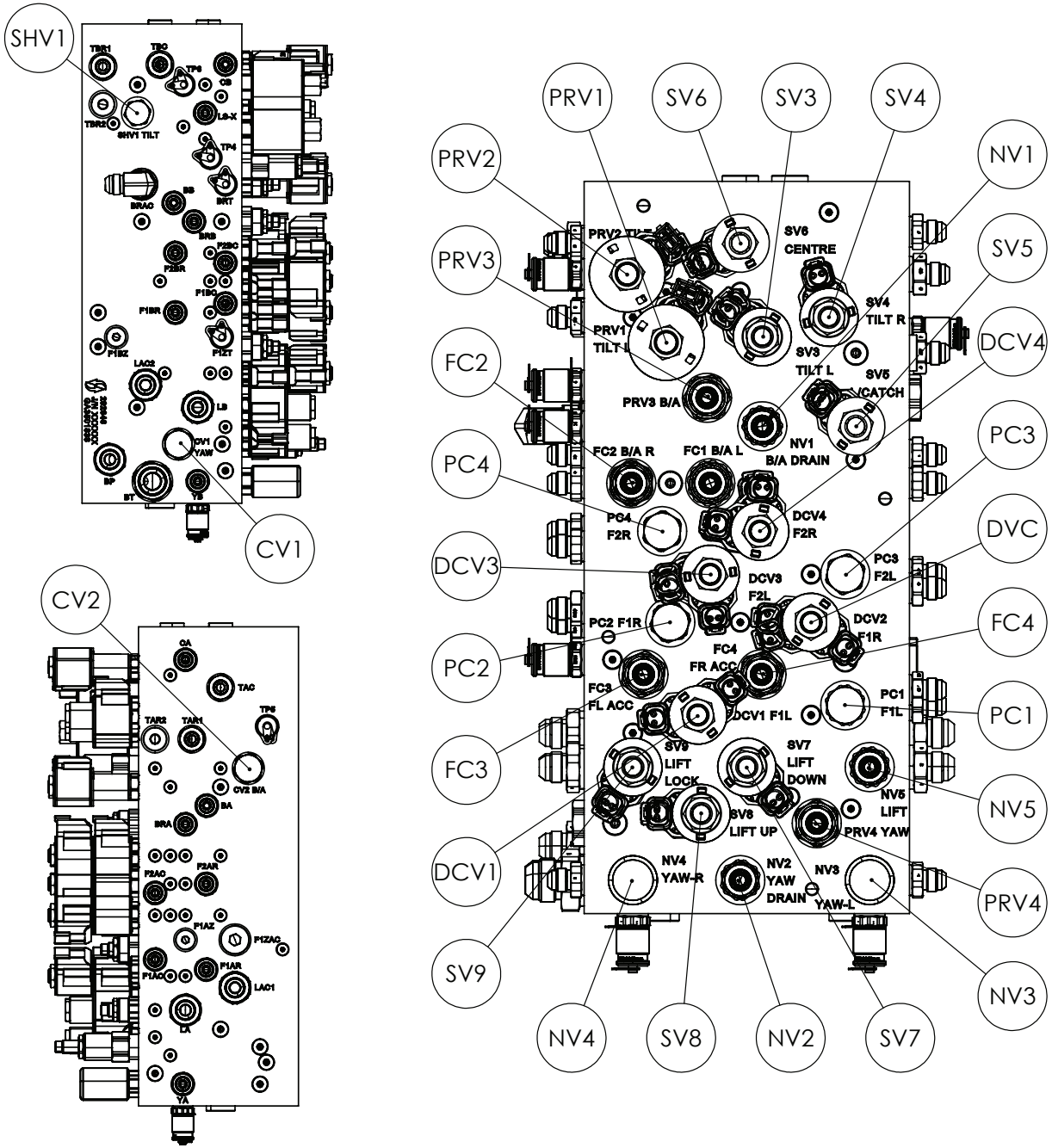

FUNCTION TABLE	
CV1	CV10-20 - HYDRAULIC YAW - RH
CV2	CV10-20 - BREAKAWAY ACCUMULATOR
DCV1	SP08-47D - FIRST STAGE FOLD - LH
DCV2	SP08-47D - FIRST STAGE FOLD - RH
DCV3	SP08-47D - SECOND STAGE FOLD - LH
DCV4	SP08-47D - SECOND STAGE FOLD - RH
FC1	FC10-20A - BREAKAWAY - LH
FC2	FC10-20A - BREAKAWAY - RH
FC3	FC10-20A - FIRST STAGE FOLD ACCUMULATOR - LH
FC4	FC10-20A - FIRST STAGE FOLD ACCUMULAOTR - RH
NV1	NV08-20A - BREAKAWAY DRAIN
NV2	NV08-20A - HYDRAULIC YAW DRAIN
NV3	NV08-20A - HYDRAULIC YAW LOCK - LH
NV4	NV08-20A - HYDRAULIC YAW LOCK - RH
NV5	NV08-20A - BOOM LIFT CONTROL
PC1	DC08-40 - FIRST STAGE FOLD LH
PC2	DC08-40 - FIRST STAGE FOLD RH
PC3	DC08-40 - SECOND STAGE FOLD - LH
PC4	DC08-40 - SECOND STAGE FOLD -RH
PRV1	TS10-36 - BOOM TILT - LH
PRV2	TS10-36 - BOOM TILT - RH
PRV3	PR08-32A - BREAKAWAY
PRV4	PR08-32A - HYDRAULIC YAW
SHV1	LS08-30 - BOOM TILT
SV3	SV08-20 - BOOM TILT BLOCK - LH
SV4	SV08-20 - BOOM TILT BLOCK - RH
SV5	SV08-47D - BOOM CATCH
SV6	SV08-47D - CENTRE LEVEL
SV7	SV08-28 - BOOM LIFT DOWN
SV8	SV08-28 - BOOM LIFT UP
SV9	SV08-28 - BOOM LIFT TRAVEL LOCK

GA3501838 GOLDACRES	HYDRAULIC MANIFOLD, BOOM, LFSP S3, MY25	REV 04

Hydraulic Manifold Assembly, 48mt, Third Stage Fold

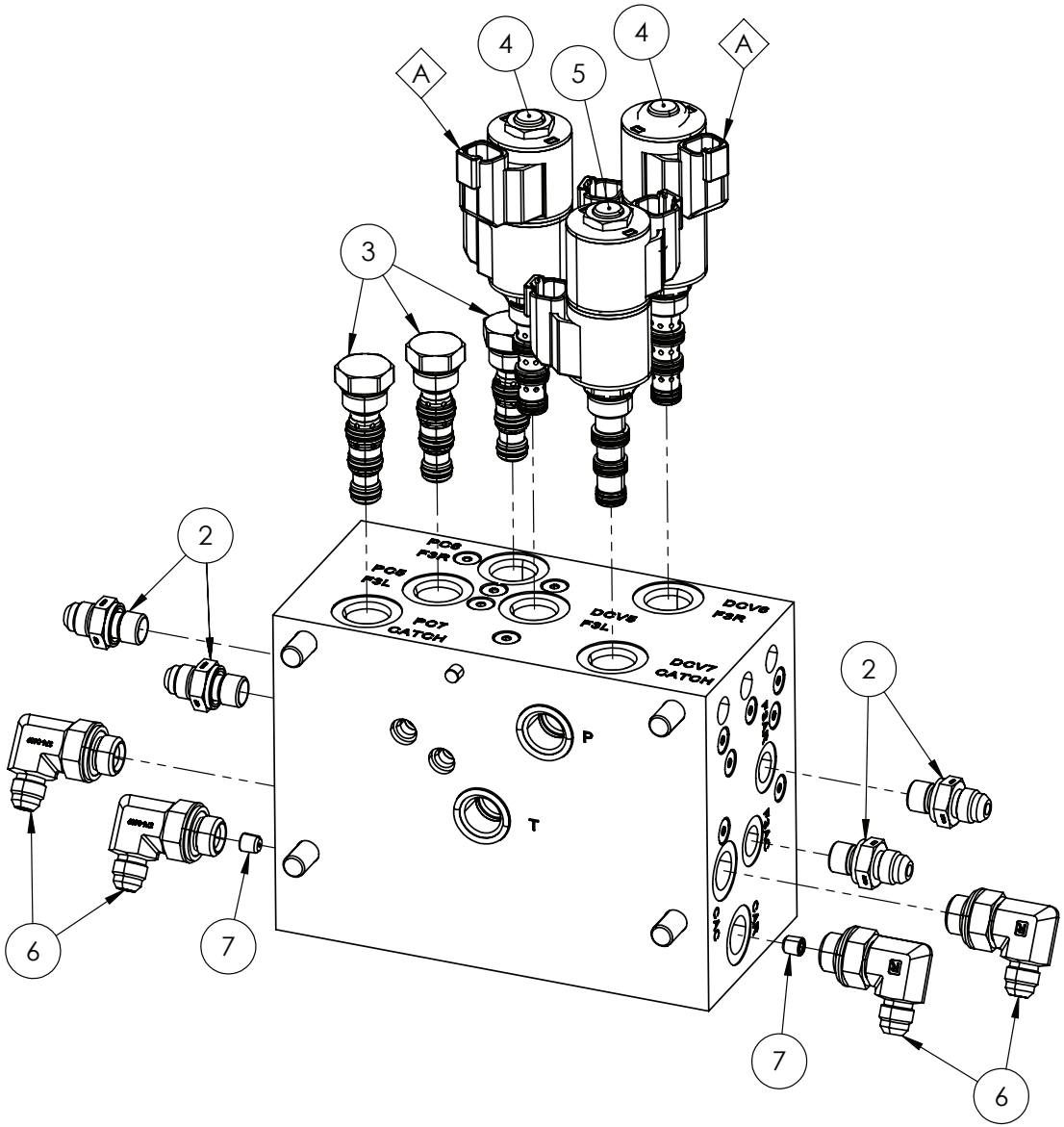

REPLACEMENT PARTS			
ITEM	PART NUMBER	DESCRIPTION	QTY
A	GA3000579	COIL, 12V DC, OILPATH, 4303612	6

IF DESCRIPTION PREFIX IS ASSEMBLY DRAWING ONLY OR PRODUCTION DRAWING ONLY THE ITEM IS NOT FOR SALE			
ITEM	PART NUMBER	DESCRIPTION	QTY
1	GA3000579	COIL, 12V DC, OILPATH, 4303612	6
2	GA3500544	HYDRAULIC ADAPTOR NIPPLE, 1/4" BSP O-RING X 9/16" JIC, S74-0409	4
3	GA3501110	HYDRAULIC CARTRIDGE, DOUBLE PILOT CHECK VALVE, OILPATH, DC08-40-0-N-25	3
4	GA3501956	HYDRAULIC CARTRIDGE, SOLENOID VALVE, OILPATH, SP08-47D-0-N-00	2
5	GA3500913	HYDRAULIC CARTRIDGE, SOLENOID VALVE, OILPATH, SV08-47C-0-N-00	1
6	GA3500319	HYDRAULIC ADAPTOR, ELBOW, 90 DEGREE, 9/16" JIC MALE X 3/8" BSPP MALE O-RING, S76-0609	4
7	GA3500896	PLUG, ORIFICE, 1/16" NPT X 0.6mm	2
GA3501839 GOLDACRES		HYDRAULIC MANIFOLD, BOOM 48, LFSP S3, MY25	REV 00

Hydraulic Manifold Assembly, 48mt, Third Stage Fold, Function Table

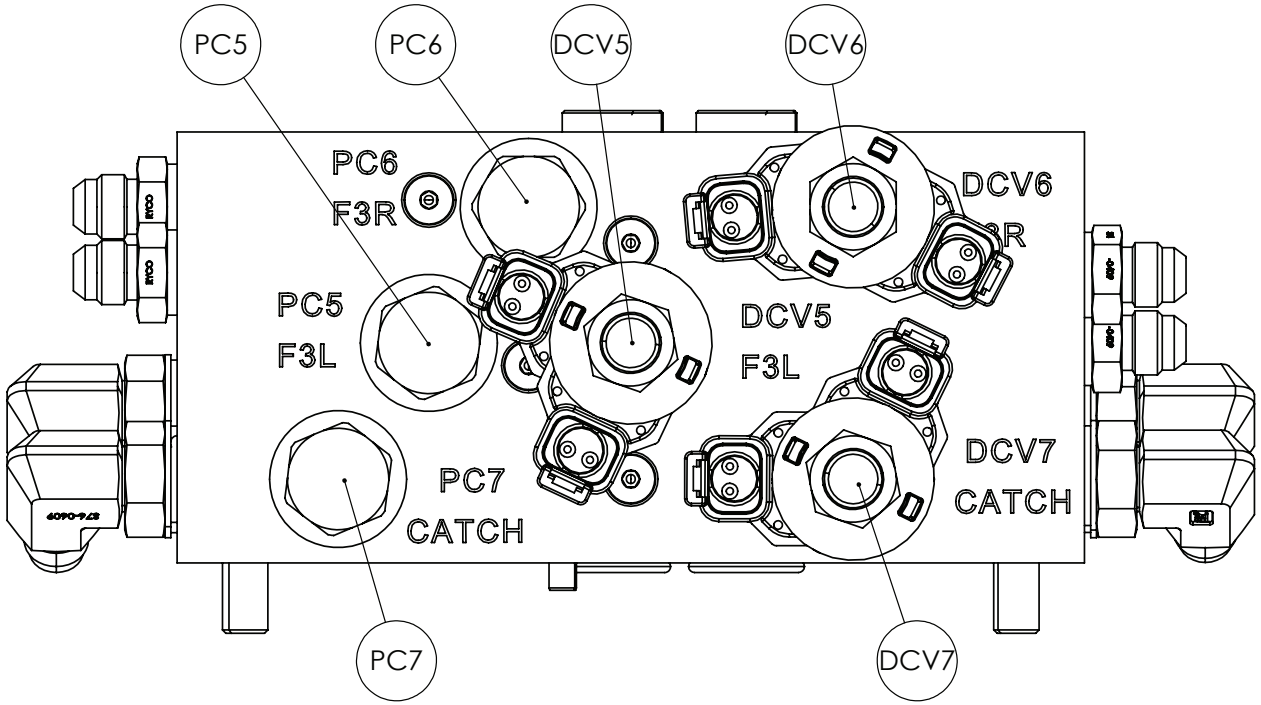

FUNCTION TABLE	
DCV5	SP08-47D - STAGE 3 LH BOOM FOLD
DCV6	SP08-47D - STAGE 3 RH BOOM FOLD
DCV7	SV08-47C - BOOM CATCH
PC5	DC08-40 - STAGE 3 LH BOOM FOLD
PC6	DC08-40 - STAGE 3 RH BOOM FOLD
PC7	DC08 -40 - BOOM CATCH

GA3501839 GOLDACRES	HYDRAULIC MANIFOLD, BOOM 48, LFSP S3, MY25	REV 00

Hydraulic Manifold, Front Mount 3PL

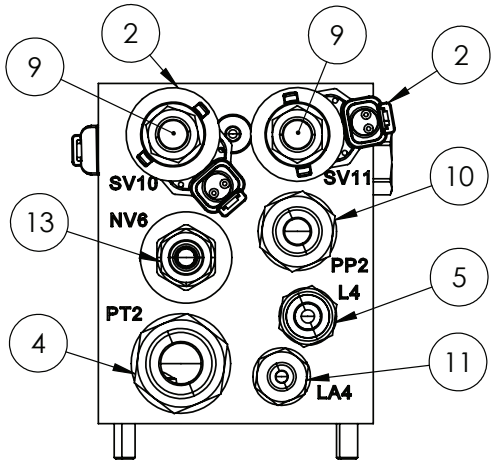

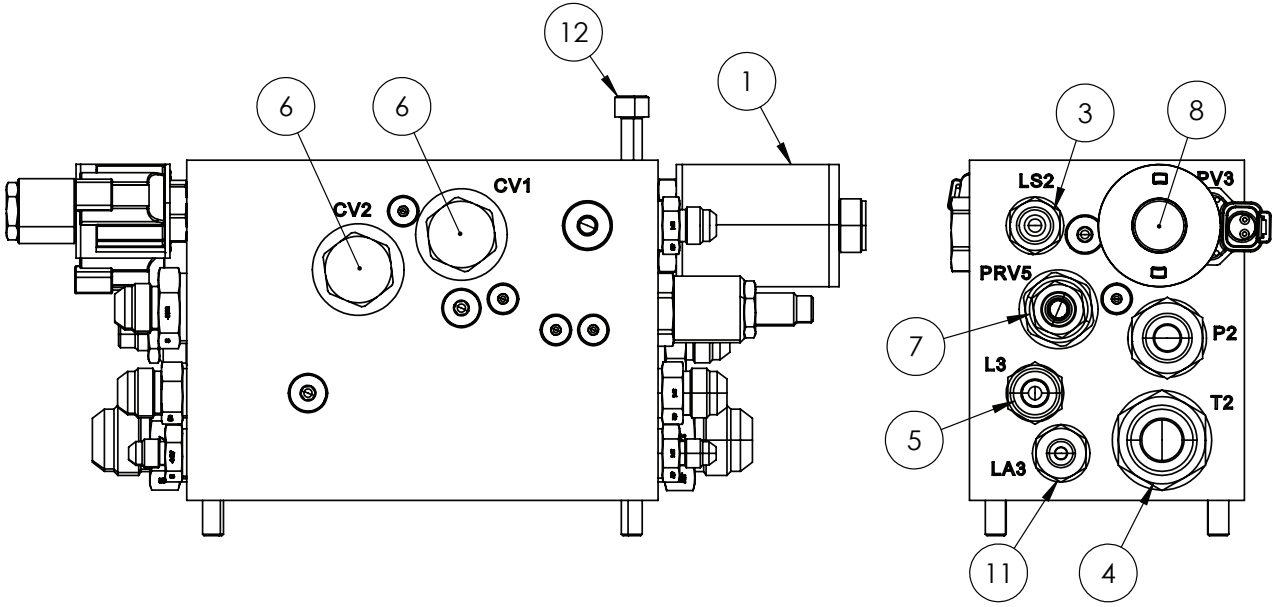

IF DESCRIPTION PREFIX IS ASSEMBLY DRAWING ONLY OR PRODUCTION DRAWING ONLY THE ITEM IS NOT FOR SALE			
ITEM	PART NUMBER	DESCRIPTION	QTY.
1	GA3000578	COIL, 12V DC, OILPATH, 4303212	1
2	GA3000579	COIL, 12V DC, OILPATH, 4303612	2
3	GA3500544	HYDRAULIC ADAPTOR NIPPLE, 1/4" BSP O-RING X 9/16" JIC, S74-0409	1
4	GA3500711	HYDRAULIC ADAPTOR NIPPLE, 3/4" BSP O-RING X 1 1/16" JIC, S74-1217	2
5	GA3501089	HYDRAULIC ADAPTOR, 1/4" BSPP MALE X 3/4" JIC MALE, S74-0412	2
6	GA3500884	HYDRAULIC CARTRIDGE, CHECK VALVE, OILPATH, CV10-20-0-N-05	2
7	GA3500891	HYDRAULIC CARTRIDGE, PRESSURE REDUCING VALVE, OILPATH, PR58-38A-0-P-20	1
8	GA3501076	HYDRAULIC CARTRIDGE, PROPORTIONAL FLOW REGULATOR VALVE, HYDRAFORCE, PV72-20A-0-N-00	1
9	GA3501197	HYDRAULIC CARTRIDGE, SOLENOID VALVE, DCV, OILPATH, SV08-28-0-N-12ER	2
10	GA3500303	HYDRAULIC ADAPTER, NIPPLE, 1/2" BSPP O-RING MALE X 3/4" JIC MALE, S74-0812	2
11	GA3501283	HYDRAULIC ADAPTOR, NIPPLE, 1/4" BSPP O-RING MALE X 7/16" JIC MALE, S74-0407	2
12	GA0500232	SHCS, M8 X 135, GR12.9, ZP	4
13	GA3501961	VALVE, CONTROL, HYDRAULIC, NV08-20A-0-N	1
GA3501899 GOLDACRES		HYDRAULIC MANIFOLD, FRONT TANK, LF SP S3	REV 01

Hydraulic Manifold, Function Table, Front mount 3PL

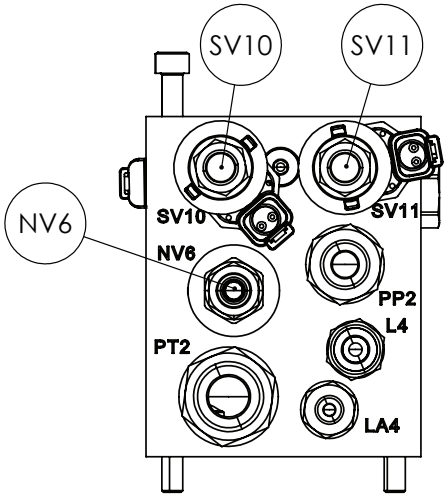

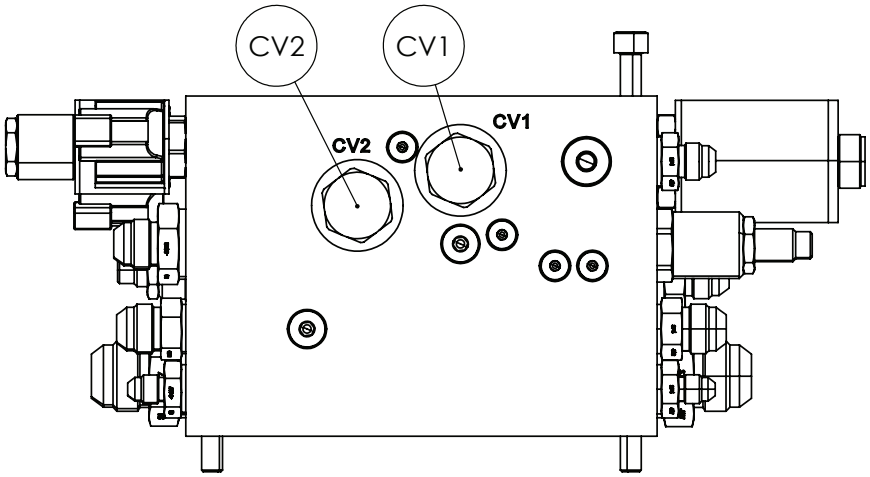

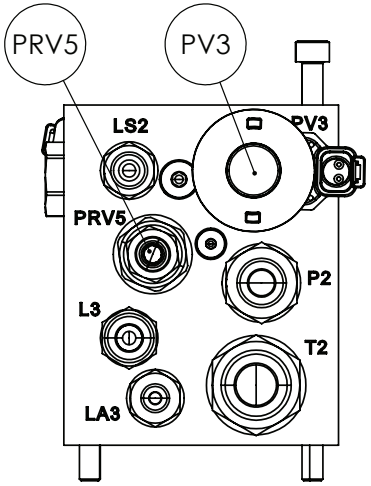

FUNCTION TABLE	
CV1	VCV10-20 - CHECK VALVE SPRAY PUMP
CV2	CV10-20 - CHECK VALVE SPRAY PUMP
NV6	NV08-20A - LIFT CONTROL
PV3	PV72-20A - SPRAY PUMP
PRV5	PR1 - FRONT LIFT
SV10	SV08-28 - FRONT LIFT UP
SV11	SV08-28 - FRONT LIFT DOWN

GA3501899 GOLDACRES	HYDRAULIC MANIFOLD, FRONT TANK, LF SP S3	REV 01

Hydraulic Manifold, Fan, Combination Cooler

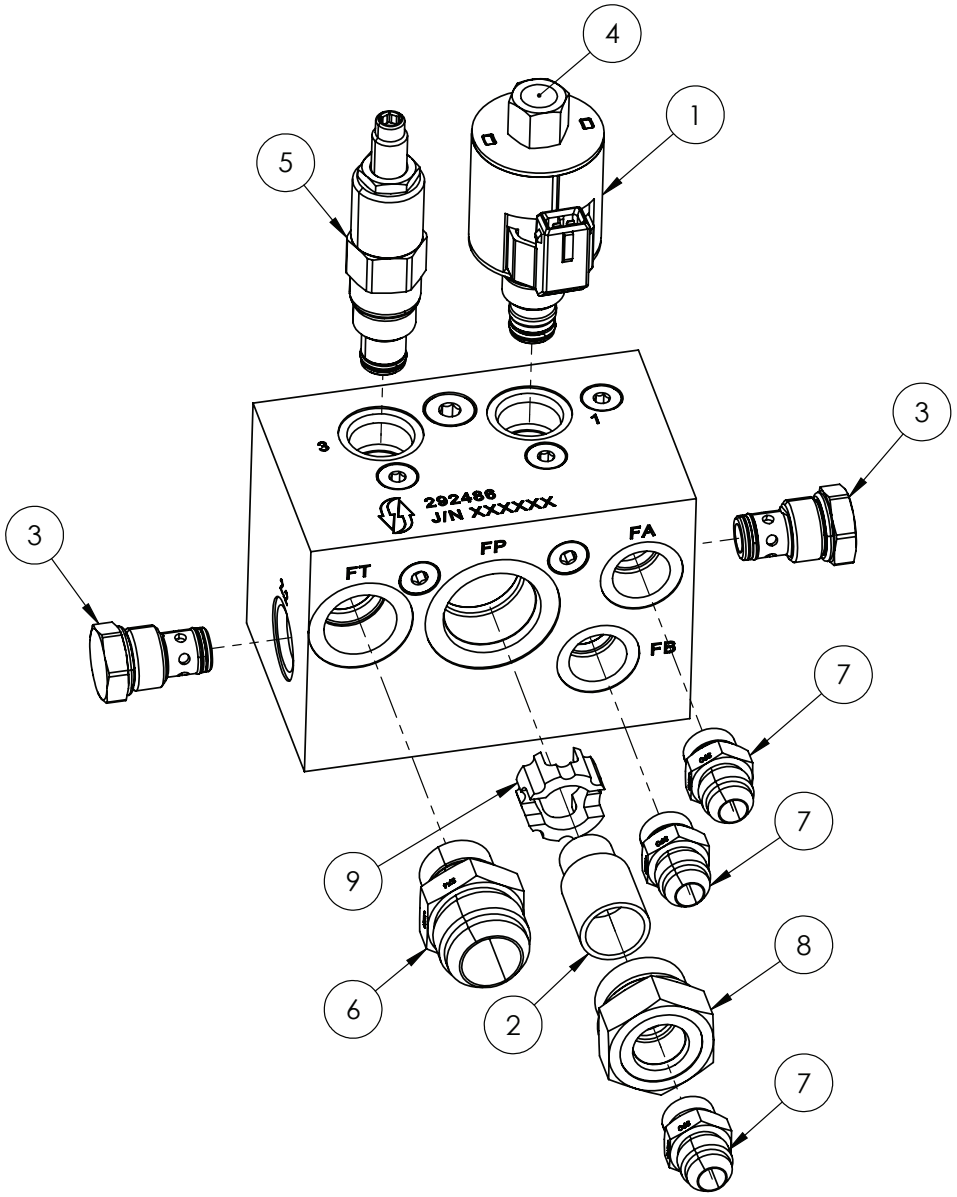

IF DESCRIPTION PREFIX IS ASSEMBLY DRAWING ONLY OR PRODUCTION DRAWING ONLY THE ITEM IS NOT FOR SALE			
ITEM	PART NUMBER	DESCRIPTION	QTY
1	GA3000577	COIL, 12V DC, OILPATH, 4303712	1
2	GA3502091	FILTER ELEMENT, HYDRAULIC, 60 MICRONS, CCS-26-43-60B	1
3	GA3500884	HYDRAULIC CARTRIDGE, CHECK VALVE, OILPATH, CV10-20-0-N-05	2
4	GA3500928	HYDRAULIC CARTRIDGE, PRESSURE RELIEVING PROPORTIONAL VALVE, OILPATH, TS10-27A-0-N-00	1
5	GA3500903	HYDRAULIC CARTRIDGE, RELIEF VALVE, OILPATH, RV10-26A-0-N-30	1
6	GA3501140	HYDRAULIC ADAPTER, NIPPLE, 3/4" BSPP O-RING MALE X 1 5/16" JIC MALE, S74-1221	1
7	GA3500739	HYDRAULIC ADAPTOR, NIPPLE, 3/4" JIC MALE X 3/4" UN MALE O-RING, S90-1212	3
8	GA5026719	PLUG, RETAINING, FILTER ELEMENT	1
9	GA3502092	SLEEVE, FILTER LOCATOR, HYDRAULIC, SUIT, GA3501924	1
GA3501924 GOLDACRES		MANIFOLD, HYDRAULIC FAN, INNOTHERM - PA240612	REV

Hydraulic Cylinder, Lift

REPLACEMENT PARTS			
ITEM	PART NUMBER	DESCRIPTION	QTY
A	GA3501576	SEAL KIT, HYDRAULIC CYLINDER, SUITS GA3500593, "BICELLI GECO" BRAND ONLY	1
	GA5052731	SEAL KIT, SUIT 3" BORE X 2 1/2" ROD, SUITS GA3500593, "HYPOWER" BRAND ONLY	1

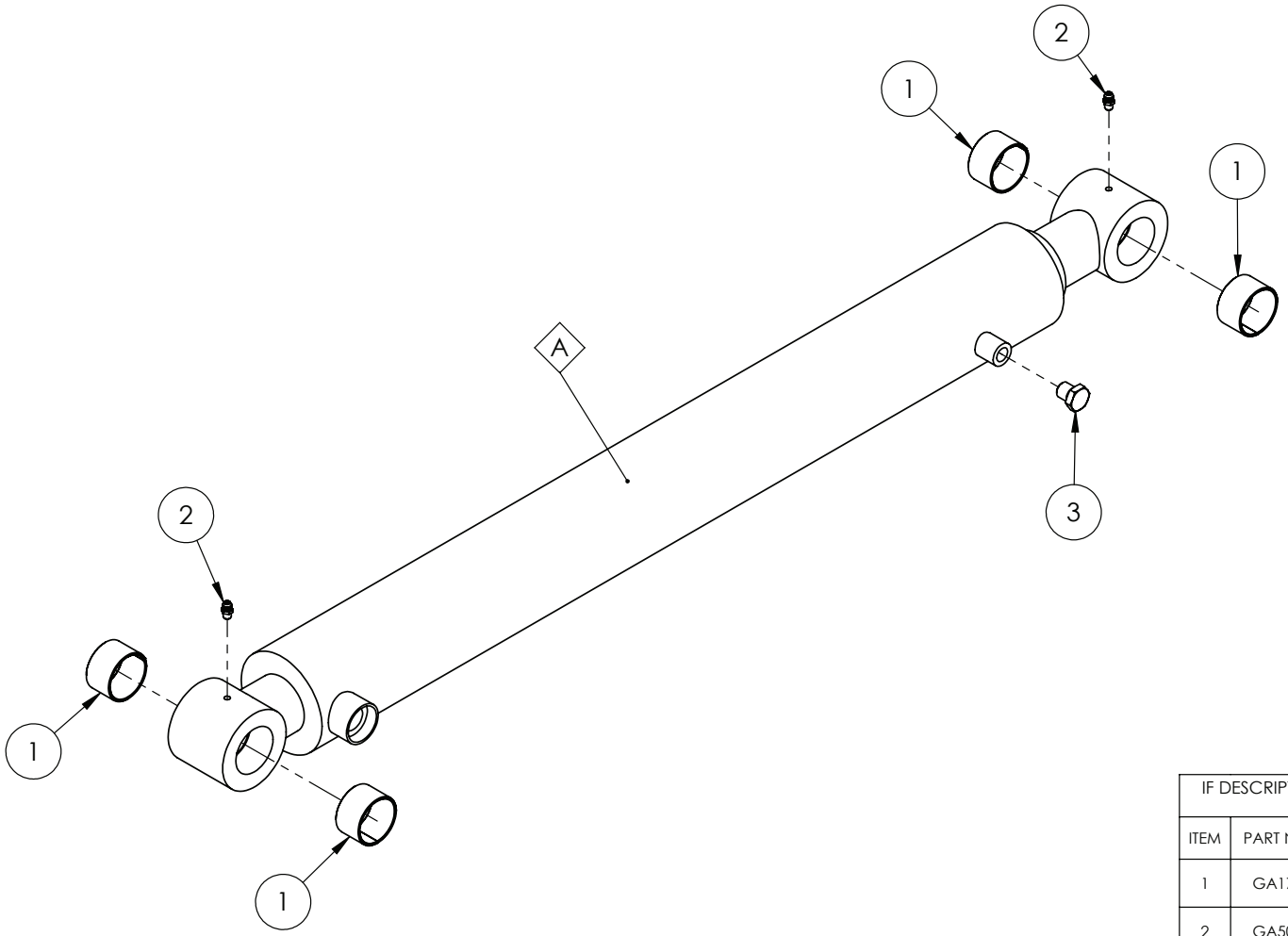

IF DESCRIPTION PREFIX IS ASSEMBLY DRAWING ONLY OR PRODUCTION DRAWING ONLY THE ITEM IS NOT FOR SALE			
ITEM	PART NUMBER	DESCRIPTION	QTY
1	GA1700027	BEARING, GLACIER BUSH, 1 1/2" ID X I" LONG	4
2	GA5012203	GREASE NIPPLE 1/4" UNF SHORT	2
3	GA3500299	HYDRAULIC ADAPTOR, PLUG, 1/4" BSPP MALE, S73-04	1
GA3500593 GOLDACRES		HYDRAULIC CYLINDER, DISPLACEMENT, 3" BORE, 2.5" ROD, 26" STROKE SUIT 1.5" PINS	REV 01

Hydraulic Cylinder, Yaw

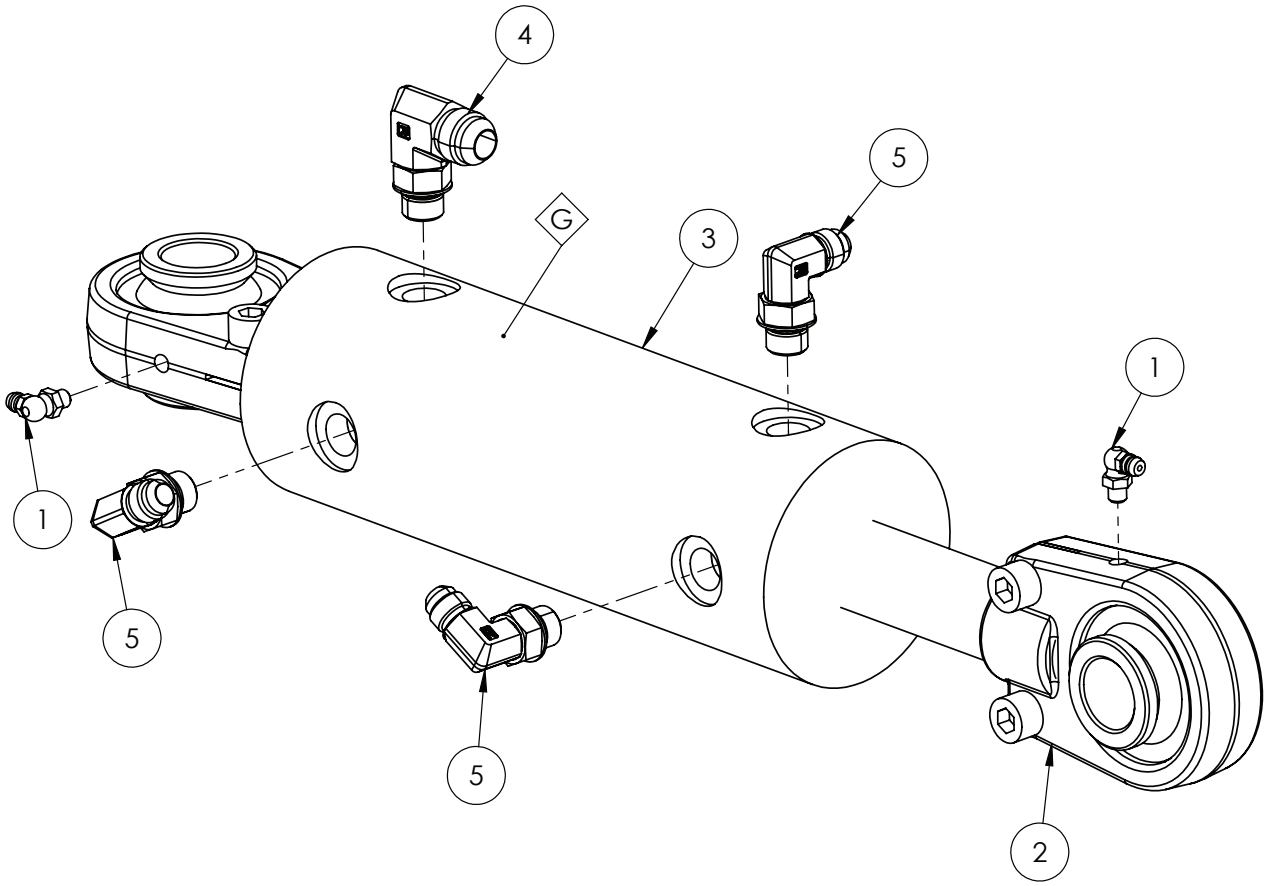

REPLACEMENT PARTS			
ITEM	PART NUMBER	DESCRIPTION	QTY
A	GA5052965	BEARING, ROSE END HOUSING, M28 SCREW ON, SUIT HYDRAULIC CYLINDER & DELTA LINK, INC. BUSHES	1
B	GA5050450	GREASE NIPPLE, 6mm	1
C	GA5021925	SMALL BEARING BUSH, SUIT SCREW ON ROSE END, HYPOWER, R-10424	2
D	GA5006131	SHCS M10 X 30 SS A2-70	2
E	GA5067605	BEARING, RADIAL SPHERICAL PLAIN, 30mm ID X 55mm OD X 32mm THICK, GEG 30 ES 2RS	1
F	GA5067610	CIRCLIP, SUIT BEARING SCREW ON ROSE END, RTW 55	1
G	GA3501270	SEAL KIT, SUIT, HYDRAULIC CYLINDER, GA5018540 & GA5060818, "MOTUS", SK300125	-
-	GA5052966	SALES KIT, BEARING KIT, SUIT SCREW ON ROSE END, CYLINDERS AND DELTA LINKS	-

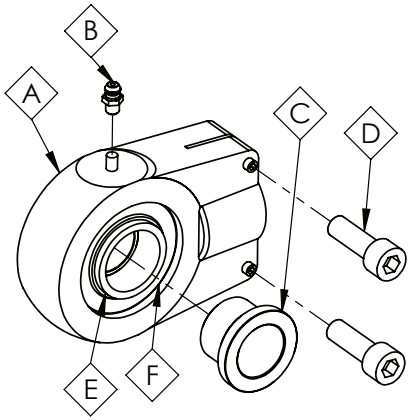

IF DESCRIPTION PREFIX IS ASSEMBLY DRAWING ONLY OR PRODUCTION DRAWING ONLY THE ITEM IS NOT FOR SALE			
ITEM	PART NUMBER	DESCRIPTION	QTY
1	GA5009637	GREASE NIPPLE, ELBOW, 90 DEGREE, 1/4 UNF MALE, MACH0207	2
2	GA5052965	HEAVY DELTA LINK ROSE END	2
3	GA5060818	HYDRAULIC CYLINDER, BORE 3", ROD 1.25", STROKE 117.5mm	1
4	GA3500802	HYDRAULIC ADAPTOR, ELBOW, 90 DEGREE, 3/4" JIC MALE X 9/16" UN MALE O-RING, S91-1209	1
5	GA3500716	HYDRAULIC ADAPTOR, ELBOW, 90 DEGREE, 9/16" JIC MALE X 9/16" UN MALE O-RING, S91-0909	3
GA5060818 GOLDACRES		HYDRAULIC YAW CYLINDER LARGE 3" WITH BALL ENDS	REV 00

Hydraulic Cylinder, Tilt, 36mt - 42mt

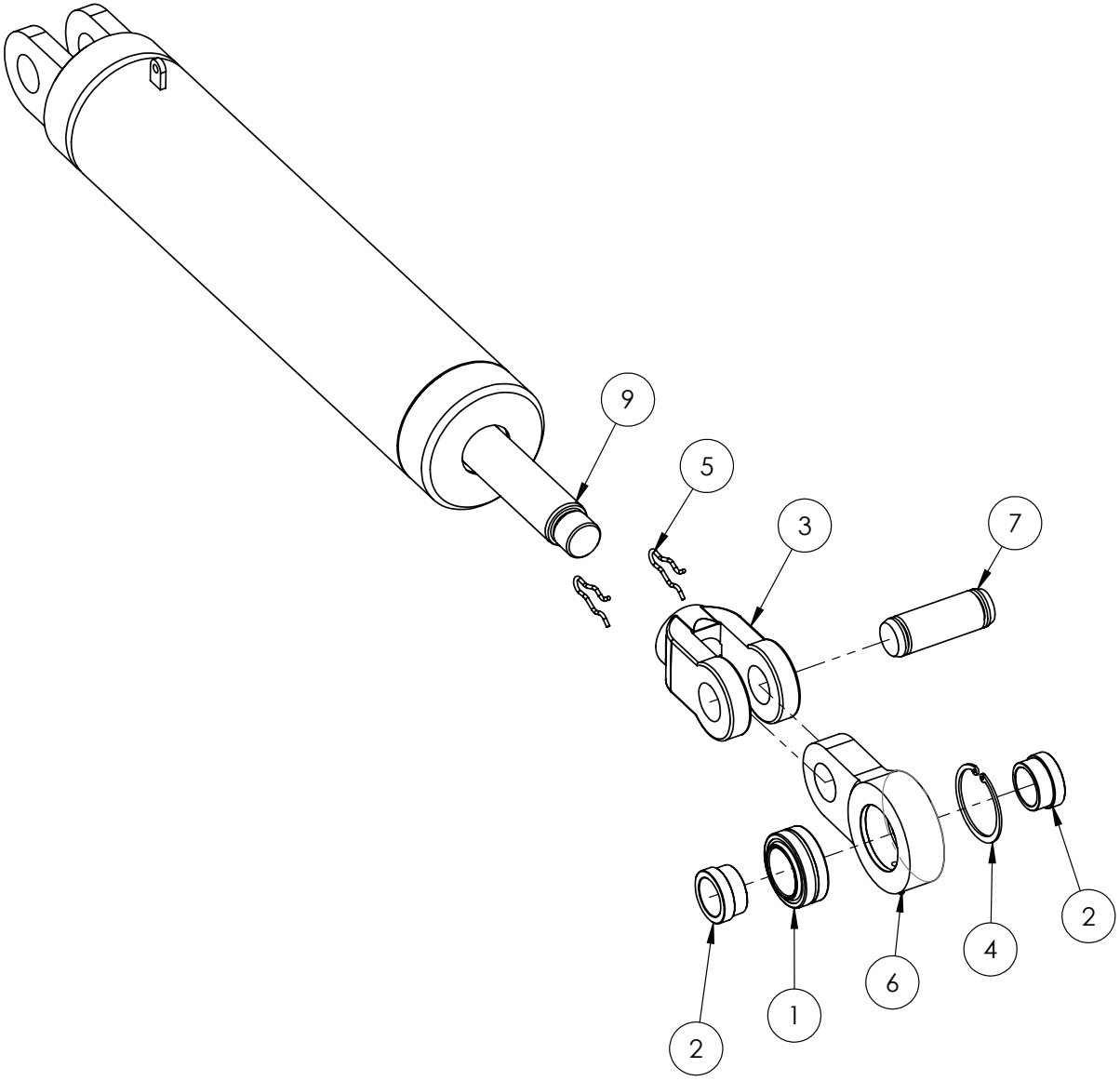

IF DESCRIPTION PREFIX IS ASSEMBLY DRAWING ONLY OR PRODUCTION DRAWING ONLY THE ITEM IS NOT FOR SALE			
ITEM	PART NUMBER	DESCRIPTION	QTY
1	GA1700029	BEARING, BALL END, 40mm, GE40ES-2RS	1
2	GA4551645	BUSH, SPACER, BALL END, ROD, TILT CYLINDER	2
3	GA5026269	CLEVIS, 1", CL10, CAST, "MOTUS", SUIT, GA3500835	1
4	GA5078782	CIRCLIP, 62 INTERNAL, CIR-D1300-0620	1
5	GA5026385	CLIP, RETAINING, SUIT, 1 1/4" PIN, GA4551875	2
6	GA5026384	HOUSING, TOGGLE, 32X1.25-85, SUIT, GA3500835, "MOTUS BRAND" ONLY	1
7	GA4551875	PIN, 1 1/4" X 68mm LONG, TILT CYLINDER KNUCKLE	1
8	SENSOR TAB	SENSOR TAB	1
9	GA5026386	SHAFT, 1.25 X 20, HYDRAULIC CYLINDER, SUIT, GA3500835, "MOTUS BRAND" ONLY	1
GA3500835 GOLDACRES		HYDRAULIC CYLINDER, BORE 4", ROD 1.5", STROKE 300mm	REV 00

Hydraulic Cylinder, Tilt, 48mt

REPLACEMENT PARTS			
ITEM	PART NUMBER	DESCRIPTION	QTY
A	GA5026270	SEAL KIT, SUIT, HYDRAULIC CYLINDER, GA3501852, "EUREKA ENG" BRAND ONLY	-
B	GA5026281	KIT, BUSH & BEARING, WITH CIRCLIP, SUIT, 'EUREKA BRAND' GA3501852	-

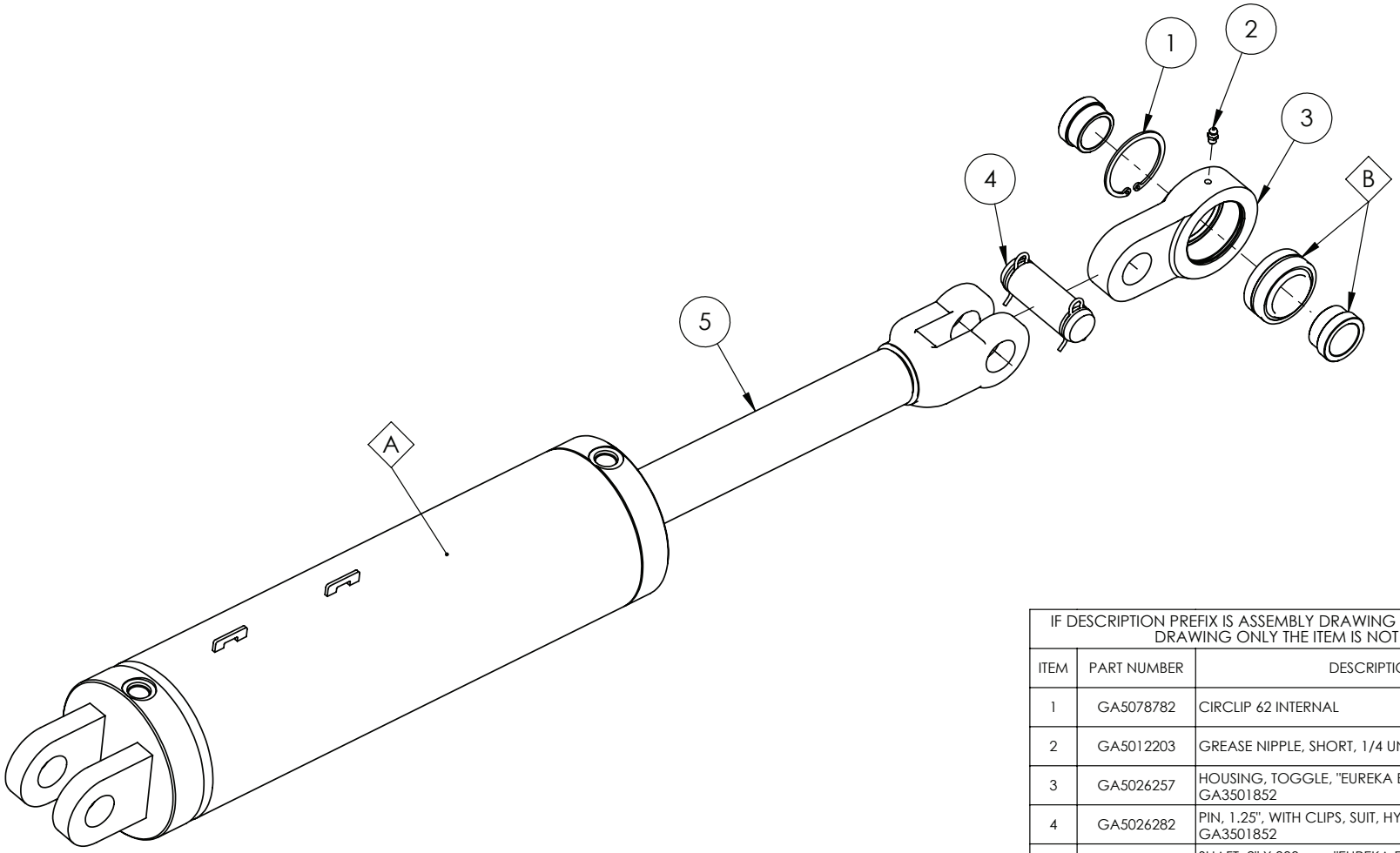

IF DESCRIPTION PREFIX IS ASSEMBLY DRAWING ONLY OR PRODUCTION DRAWING ONLY THE ITEM IS NOT FOR SALE			
ITEM	PART NUMBER	DESCRIPTION	QTY
1	GA5078782	CIRCLIP 62 INTERNAL	1
2	GA5012203	GREASE NIPPLE, SHORT, 1/4 UNF, MACH0207	1
3	GA5026257	HOUSING, TOGGLE, "EUREKA ENG", SUITS, GA3501852	1
4	GA5026282	PIN, 1.25", WITH CLIPS, SUIT, HYDRAULIC CYLINDER, GA3501852	1
5	GA5026255	SHAFT, 2" X 300mm, "EUREKA ENG", SUIT, GA3501852	1
GA3501852 GOLDACRES		HYDRAULIC CYLINDER, BORE 5", ROD 2.0", STROKE 300mm	REV 00

Cylinder, Cushion, 48mt, Fold, Flange Base Mount

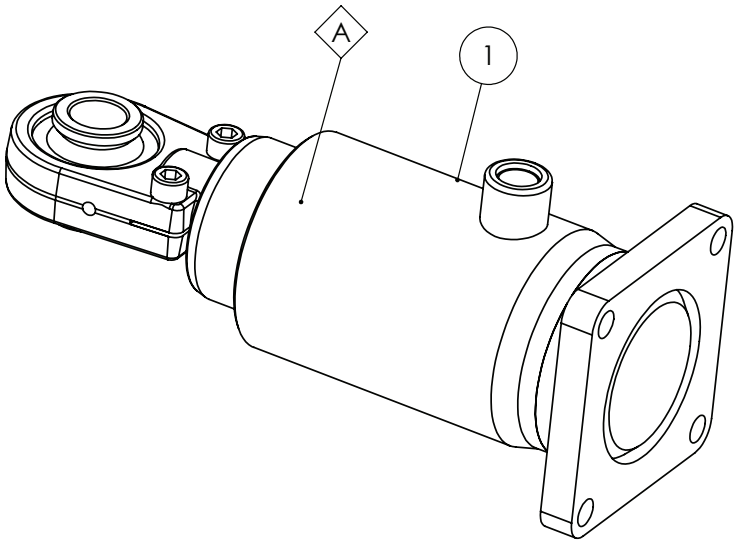

REPLACEMENT PARTS			
ITEM	PART NUMBER	DESCRIPTION	QTY
A	GA3500673	SEAL KIT, HYDRAULIC CYLINDER, SUIT GA3500656, EUREKA ENGINEERED PRODUCTS	-
B	GA5050450	GREASE NIPPLE, 6mm	-
C	GA5052965	BEARING, ROSE END HOUSING, M28 SCREW ON, SUIT HYDRAULIC CYLINDER & DELTA LINK, INC. BUSHES	-
D	GA5052966	SALES KIT, BEARING KIT, SUIT SCREW ON ROSE END, CYLINDERS AND DELTA LINKS	-
E	GA5067605	BEARING, RADIAL SPHERICAL PLAIN, 30mm ID X 55mm OD X 32mm THICK, GEG 30 ES 2RS	-
F	GA5067610	CIRCLIP, SUIT BEARING SCREW ON ROSE END, RTW 55	-
G	GA5021925	SMALL BEARING BUSH, SUIT SCREW ON ROSE END, HYPOWER, R-10424	-
H	GA5006131	SHCS M10 X 30 SS A2-70	-

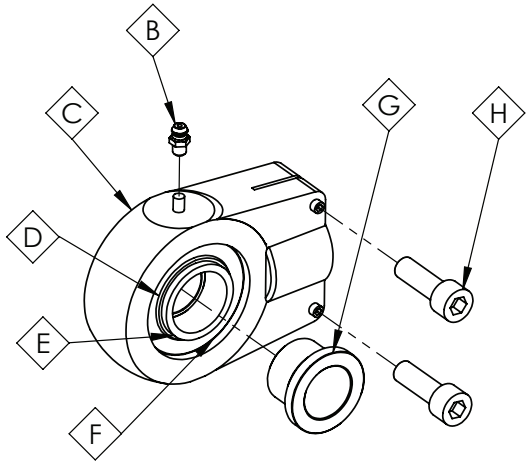

IF DESCRIPTION PREFIX IS ASSEMBLY DRAWING ONLY OR PRODUCTION DRAWING ONLY THE ITEM IS NOT FOR SALE			
ITEM	PART NUMBER	DESCRIPTION	QTY
1	GA3500656	HYDRAULIC CYLINDER, DISPLACEMENT (CUSHION), 3.25" BORE, 3" ROD, FLANGE BASE MOUNT, 1" ROSE END	1
GA3500656 GOLDACRES		HYDRAULIC CYLINDER, DISPLACMENT (CUSHION), 3.25" BORE, 3" ROD, FLANGE BASE MOUNT, 1" ROSE END	REV 00

Hydraulic Cylinder, Fold, 36mt - 48mt, Flange Base Mount

REPLACEMENT PARTS			
ITEM	PART NUMBER	DESCRIPTION	QTY
A	GA5025907	SEAL KIT, SUIT, HYDRAULIC CYLINDER, "MOTUS" BRAND ONLY, GA3500655	-
B	GA5050450	GREASE NIPPLE, 6mm	1
C	GA5067605	BEARING, RADIAL SPHERICAL PLAIN, 30mm ID X 55mm OD X 32mm THICK, GEG 30 ES 2RS	1
D	GA5067610	CIRCLIP, SUIT BEARING SCREW ON ROSE END, RTW 55	2
E	GA5026034	BUSH, ROSE END, 30OD X 25ID	2

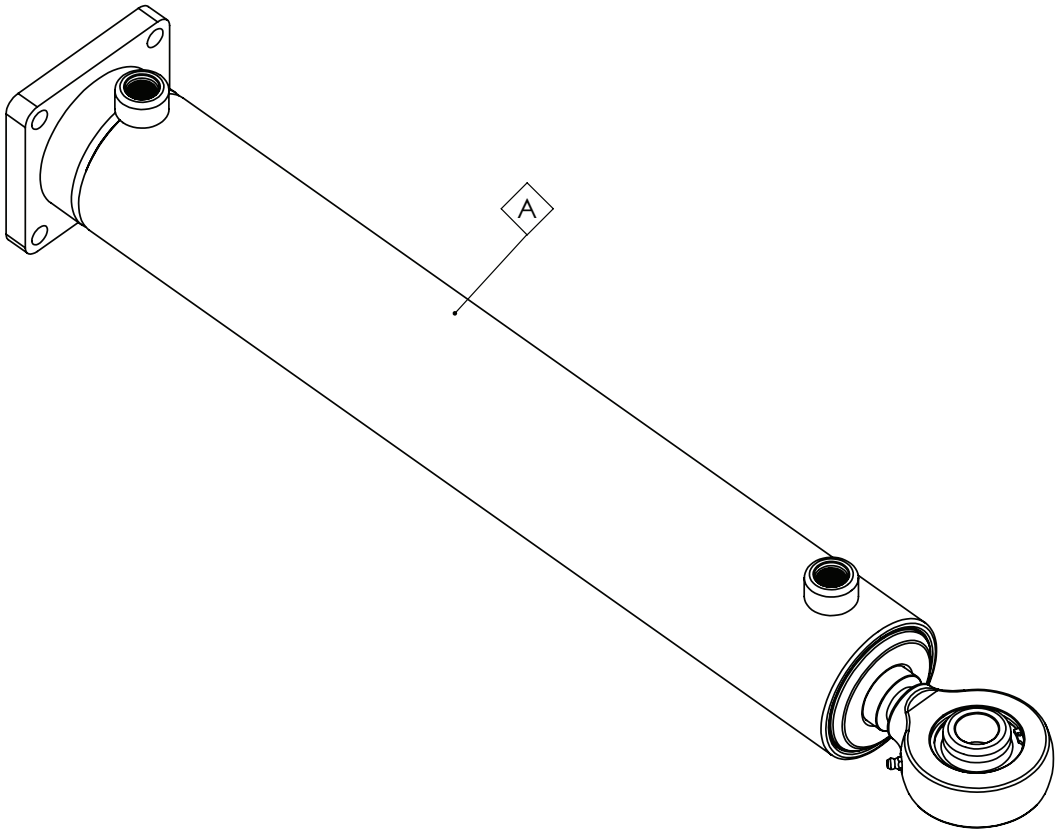

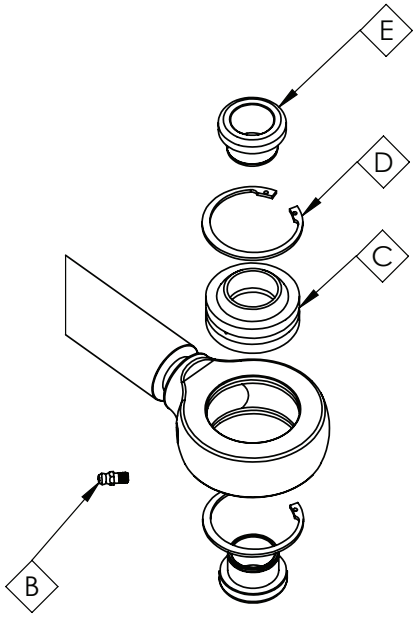

GA3500655 GOLDACRES	HYDRAULIC CYLINDER, DOUBLE ACTING, 3.25" BORE, 1.5" ROD, FLANGE BASE MOUNT, 1" ROSE END	REV 06

Hydraulic Cylinder, Centre Level

REPLACEMENT PARTS			
ITEM	PART NUMBER	DESCRIPTION	QTY
A	GA3501580	SEAL KIT, SUIT, HYDRAULIC CYLINDER, GA3500477, "BICELLI GECO" BRAND ONLY, 6325.SK	-

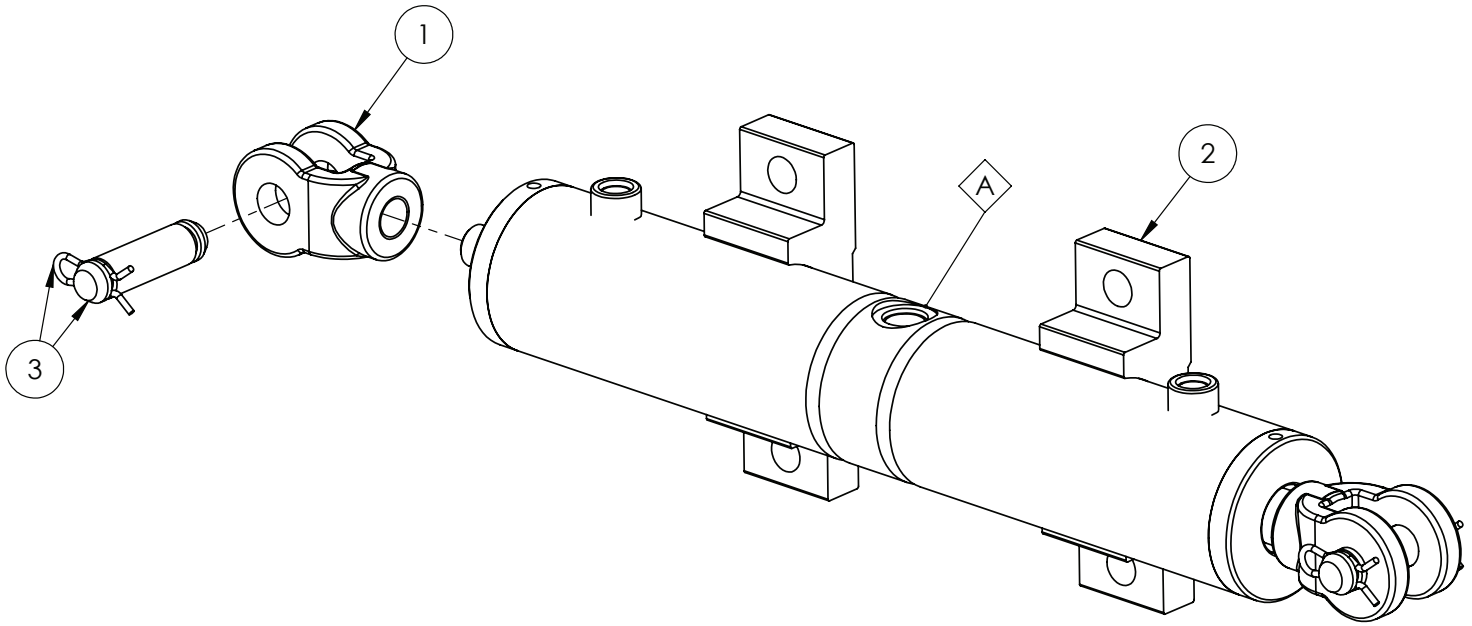

IF DESCRIPTION PREFIX IS ASSEMBLY DRAWING ONLY OR PRODUCTION DRAWING ONLY THE ITEM IS NOT FOR SALE			
ITEM	PART NUMBER	DESCRIPTION	QTY
1	GA5026493	CLEVIS, 72X36X46, SUIT, HYDRAULIC CYLINDER, "BICELLI GECO", GA3500477	2
2	GA3501581	FOOT PAD, HYDRAULIC CYLINDER, CENTRE LEVEL, GA3500477, "BICELLI GECO" BRAND ONLY	2
3	GA3501582	PIN, 3/4" X 14mm, HYDRAULIC CYLINDER, GA3500477, "BICELLI GECO", BRAND ONLY	2
GA3500477 GOLDACRES		HYDRAULIC CYLINDER, CENTRE LEVEL 2016	REV 00.B

Hydraulic Cylinder, Bi-Fold, RIVX

REPLACEMENT PARTS			
ITEM	PART NUMBER	DESCRIPTION	QTY
A	GA3501077	SEAL KIT, HYDRAULIC CYLINDER, BI-FOLD CUSHION, GA3500681	1

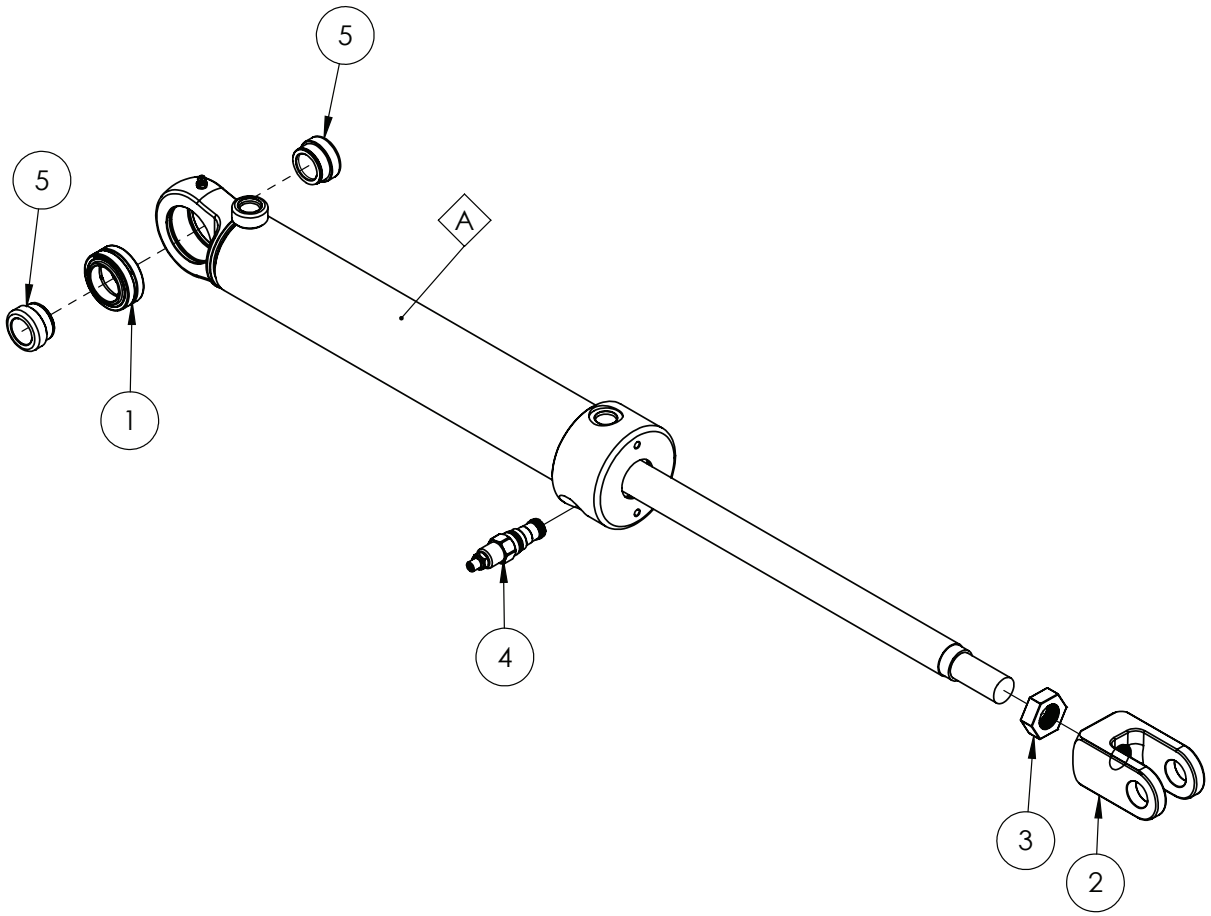

IF DESCRIPTION PREFIX IS ASSEMBLY DRAWING ONLY OR PRODUCTION DRAWING ONLY THE ITEM IS NOT FOR SALE			
ITEM	PART NUMBER	DESCRIPTION	QTY
1	GA3501081	BEARING, SPHERICAL, HYDRAULIC CYLINDER, GA3500681	1
2	GA3501078	CLEVIS, SCREW ON 1 1/2" UNF, HYDRAULIC CYLINDER, GA3500681	1
3	GA3501079	LOCK NUT, 1 1/2" UNF, HYDRAULIC CYLINDER, GA3500681	1
4	GA3501080	NEEDLE VALVE, HYDRAULIC CYLINDER CUSHION CONTROL, GA3500681	1
5	GA5025991	BUSH, 40X35X25, SUIT, HYDRAULIC CYLINDER, "MOTUS", GA3500681	2
GA3500681 GOLDACRES		HYDRAULIC CYLINDER, 2.5" BORE, 1 1/4" ROD, 350mm STROKE, 50mm CUSHION, BI-FOLD, TRITECH, MY20	REV 03

Hydraulic Cylinder, 3rd Stage Fold, 48mt

REPLACEMENT PARTS			
ITEM	PART NUMBER	DESCRIPTION	QTY
A	GA3501584	SEAL KIT, SUIT, HYDRAULIC CYLINDER, GA3501082, "MOTUS" BRAND	-

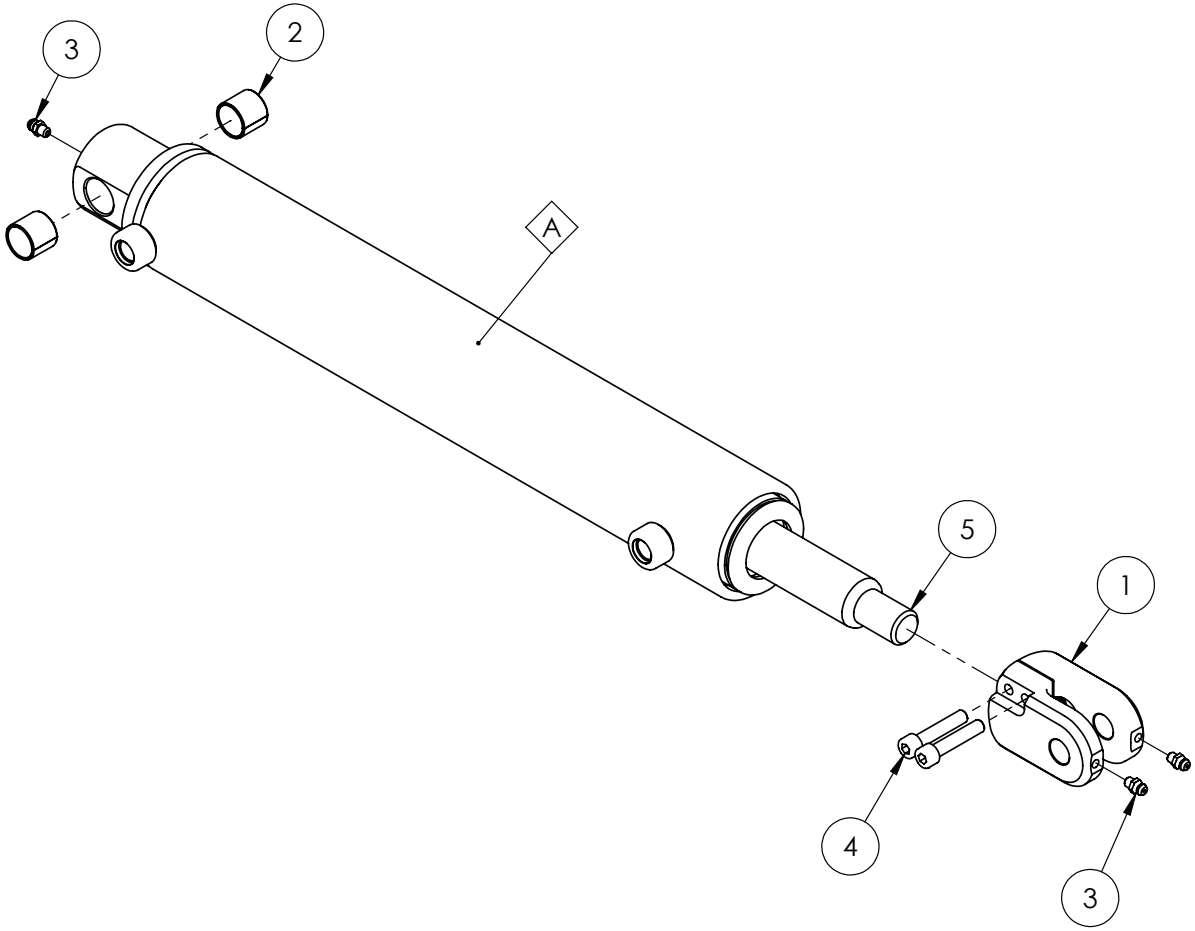

IF DESCRIPTION PREFIX IS ASSEMBLY DRAWING ONLY OR PRODUCTION DRAWING ONLY THE ITEM IS NOT FOR SALE			
ITEM	PART NUMBER	DESCRIPTION	QTY
1	GA3501886	CLEVIS, SUIT, HYDRAULIC CYLINDER, "MOTUS", GA3501082	1
2	GA3501888	GLACIER BUSH 20 X 23 X 20W	2
3	GA5050450	GREASE NIPPLE, 6mm	3
4	GA5011487	SHCS M8 X 40 GR 12.9 ZP	2
5	GA3501885	SHAFT, 1.25", SUIT, HYDRAULIC CYLINDER, "MOTUS" BRAND ONLY, GA3501082	1
GA3501082 GOLDACRES		HYDRAULIC CYLINDER, 2.5" X 1.25" X 395, 3RD STAGE FOLD, 48m	REV 00

Hydraulic Cylinder, Breakaway

REPLACEMENT PARTS			
ITEM	PART NUMBER	DESCRIPTION	QTY
A	GA5074565	SEAL KIT, SUIT, HYDRAULIC CYLINDER, 11/2" BORE 1" ROD, BREAKAWAY, GA3500683	-

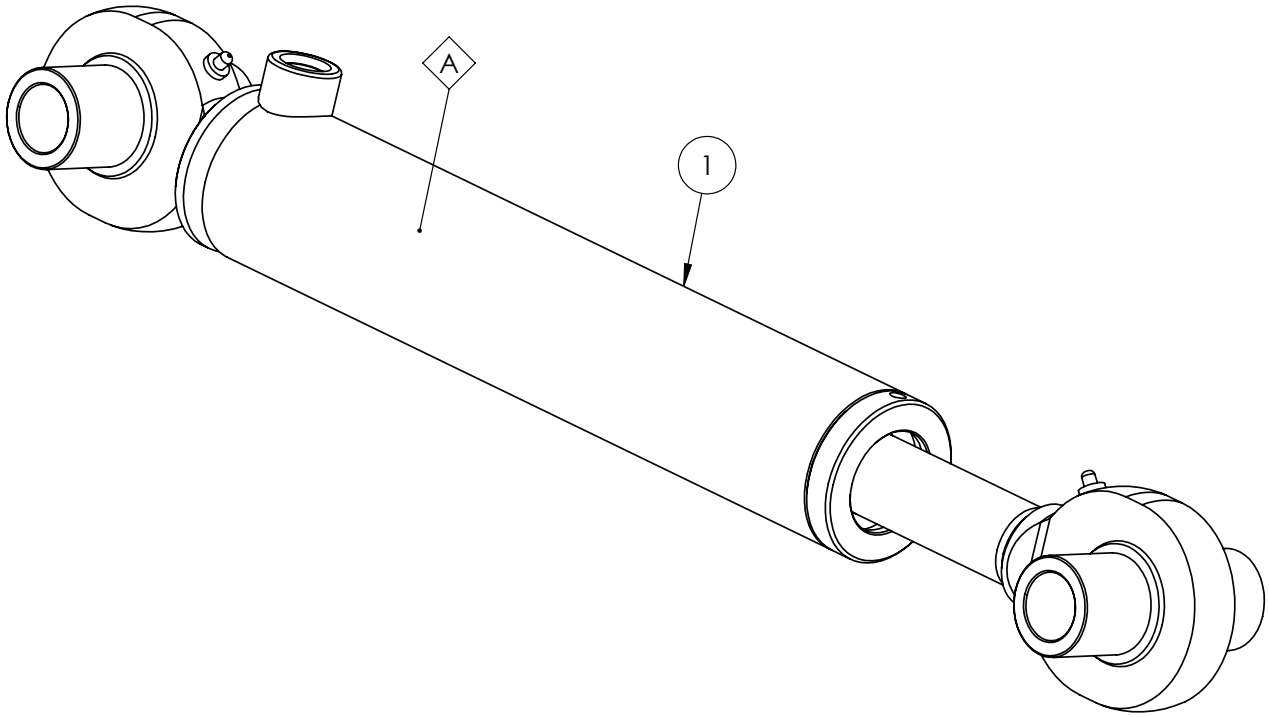

IF DESCRIPTION PREFIX IS ASSEMBLY DRAWING ONLY OR PRODUCTION DRAWING ONLY THE ITEM IS NOT FOR SALE			
ITEM	PART NUMBER	DESCRIPTION	QTY
1	GA3500683	HYDRAULIC CYLINDER, 1 1/2" BORE, 1" ROD, 182mm STROKE, BI-FOLD BREAKAWAY, TRITECH, MY20	1
GA3500683 GOLDACRES		HYDRAULIC CYLINDER, 1 1/2" BORE, 1" ROD, 182mm STROKE, BI-FOLD BREAKAWAY, TRITECH, MY20	REV

Hydraulic Cylinder, Boom Catch

REPLACEMENT PARTS			
ITEM	PART NUMBER	DESCRIPTION	QTY
A	GA3500671	SEAL KIT, HYDRAULIC CYLINDER, SUIT GA3500480, EUREKA ENGINEERED PRODUCTS	-
B	GA3501802	SEAL KIT, SUIT, HYDRAULIC CYLINER, "MOTUS" BRAND ONLY, GA3500480	-

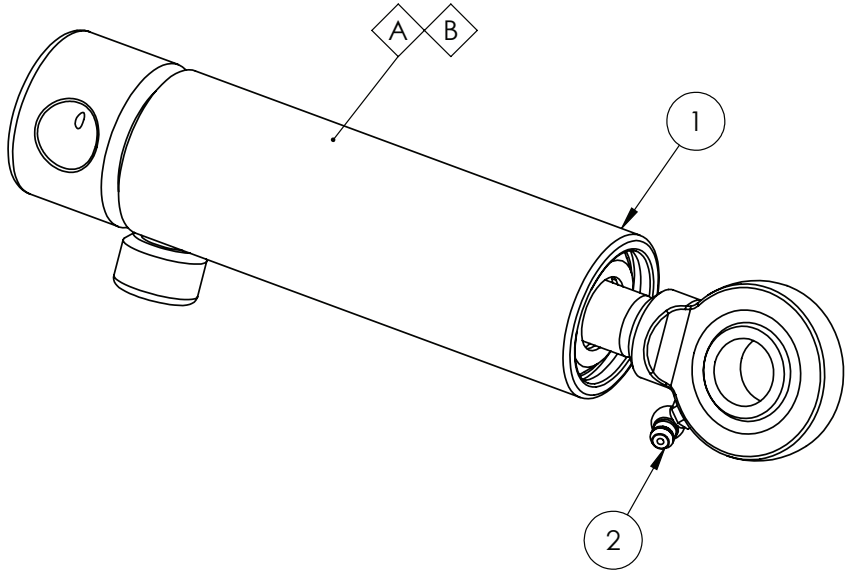

WARNING!
HEAD UNDER SPRING FORCE.
TAKE CARE ON ASSEMBLY AND DISASSEMBELY

IF DESCRIPTION PREFIX IS ASSEMBLY DRAWING ONLY OR PRODUCTION DRAWING ONLY THE ITEM IS NOT FOR SALE			
ITEM	PART NUMBER	DESCRIPTION	QTY
1	GA3500480	HYDRAULIC CYLINDER, BORE 1.5", ROD 0.75", STROKE 28mm, DISPLACEMENT, SPRING RETURN	1
2	GA5051970	GREASE NIPPLE, 6mm, 90 DEG	1
GA3500480 GOLDACRES		HYDRAULIC CYLINDER, BORE 1.5", ROD 0.75", STROKE 28mm, DISPLACEMENT, SPRING RETURN	REV 04

12 - Boom Centre

Centre Section

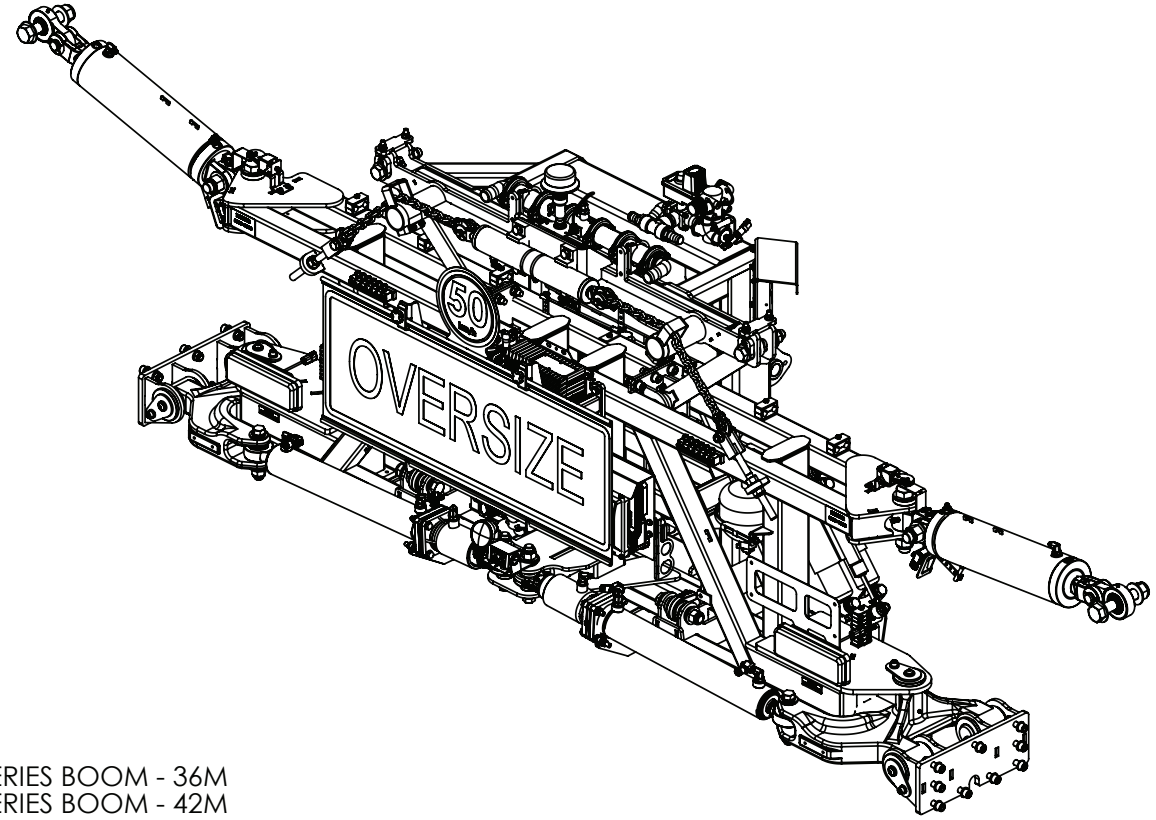

BUILD OPTIONS:
10250 - TRI-TECH RIVX SERIES BOOM - 36M
10260 - TRI-TECH RIVX SERIES BOOM - 42M
10195 - TRI-TECH V SERIES BOOM - 48M
10061 - 3TS RAPID FIRE WITH RAPID FLOW 250mm SPACING (STAGGERED)
10067 - 3TS RAPID FIRE WITH RAPID FLOW 250mm SPACING (STAGGERED) WITH TRIJETS ON TIER 1
10069 - 3TS RAPID FIRE WITH RAPID FLOW 250mm SPACING (STAGGERED) WITH TRIJETS ON TIERS 1 & 2
10072 - 3TS PRO WITH RAPID FIRE AND RAPID FLOW
10073 - HAWKEYE 2ND GENERATION PWM SYSTEM - 250mm SPACING
20062 - REMOTE GREASE NIPPLE BANK
30074 - XRT AUTO HEIGHT CONTROLLER WITH 5 SENSORS
30075 - XRT AUTO HEIGHT CONTROLLER WITH 7 SENSORS
65211 - GOLDACRES WEEDETECT BILBERRY
65212 - GOLDACRES WEEDETECT NIR
65215 - PLUMBING STANDARD
65216 - PLUMBING PLUS
65217 - PLUMBING DUAL LINES
65321 - NOZZLE CONTROL WITH 24 SECTIONS
65322 - NOZZLE CONTROL WITH INDIVIDUAL NOZZLE
65218 - NOZZLE CONTROL WITH HAWKEYE

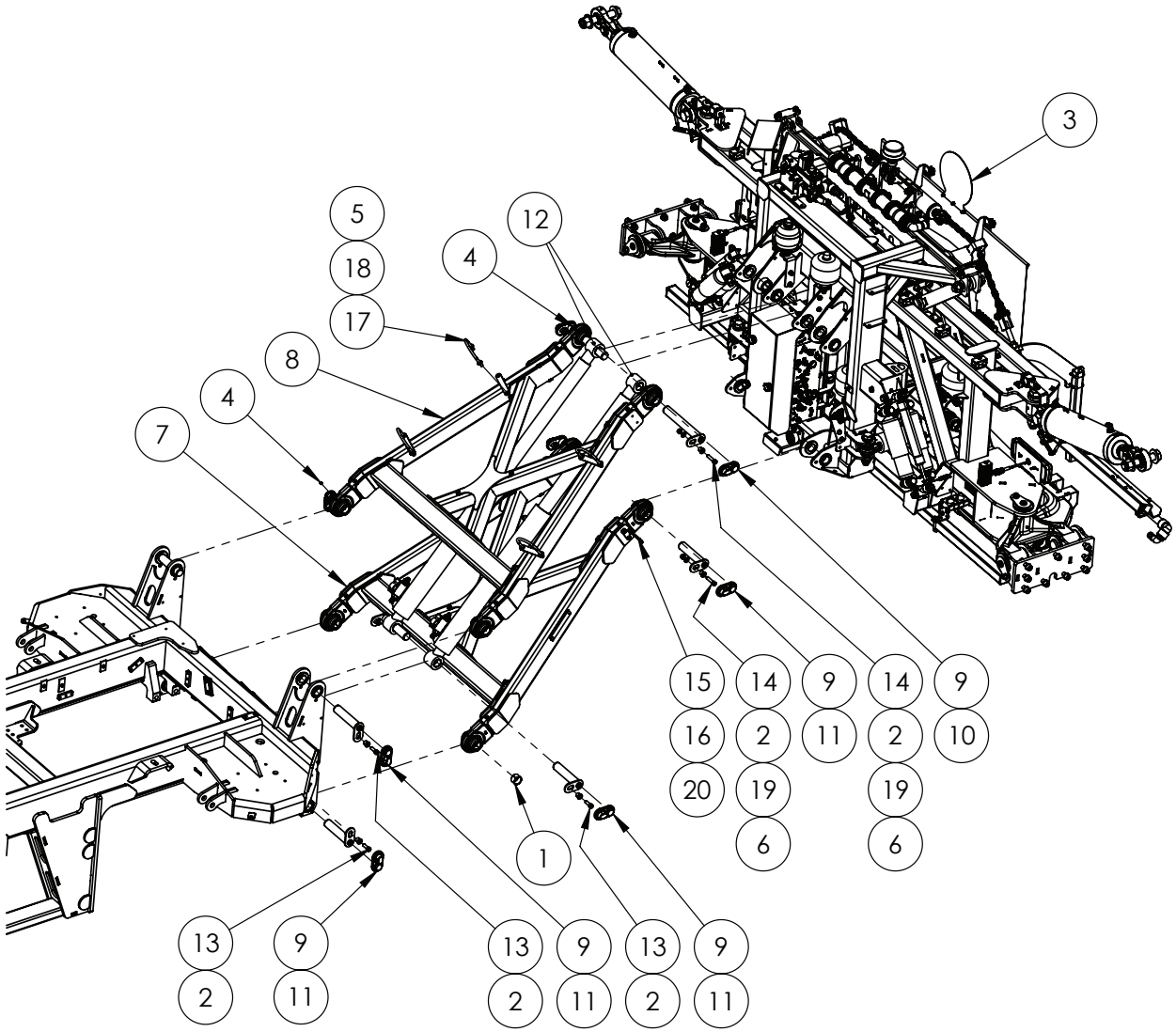

IF DESCRIPTION PREFIX IS ASSEMBLY DRAWING ONLY OR PRODUCTION DRAWING ONLY THE ITEM IS NOT FOR SALE			
ITEM	PART NUMBER	DESCRIPTION	QTY.
1	GA1700027	BEARING, GLACIER BUSH, 1 1/2" ID X I" LONG	1
2	MACH0152	BUSH WITH SHOULDER, 12.3 ID X 25 OD X 21 LONG, SUIT PARALIFT PIN BOLTS	10
3	GA6101940	CENTRE AND PARALIFT REAR ASSEMBLY, LF SP S3, MY25	1
4	GA5050450	GREASE NIPPLE, 6mm	8
5	GA5000141	NUT M10 NYLOC ZP	8
6	GA5012461	NUT M12 NYLOC ZP	4
7	GA4605124	PARALIFT ARM, BTM, SELF PROPELLED, SUIT 1 1/2" PINS, MY25	1
8	GA4605123	PARALIFT ARM, TOP, SELF PROPELLED, SUIT 1 1/2" PINS, MY25	1
9	GA5067885	PIN COVER - PLASTIC	10
10	GA5073465	PIN, 1 1/2", SUIT PARALIFT ARM AND CYLINDER, CHROME PLATED	2
11	GA5073460	PIN, 1 1/2", SUIT PARALIFT ARM, CHROME PLATED	8
12	GA4950580	PRODUCTION DRAWING ONLY, LIFT HYDRAULIC CYLINDER	2
13	GA5000313	SHCS M12 X 35 GR12.9 ZP	6
14	GA5051470	SHCS M12 X 50 GR 12.9 ZP	4
15	GA4537185	SENSOR BRACKET STAND OFF, BOLT ON, SUIT PARALIFT HEIGHT, BOOM FOLD	1
16	GA5011465	SET SCREW M8 X 16 GR8.8 ZP	2
17	GA5070905	U BOLT, ROUND TOP, M10 X127.5X115MM, WITH STOPPER WASHERS, ZP	4
18	GA5000117	WASHER M10 FLAT SS HD	8
19	GA5000577	WASHER M12 FLAT SS HD	4
20	GA5003643	WASHER M8 FLAT SS HD	2
GA7800280 GOLDACRES		ASSEMBLY DRAWING ONLY, CENTRE AND PARALIFT REAR, CHASSIS MOUNT, LF SP S3, MY25	REV 00.B

Hydraulic Cylinder Assembly, Lift

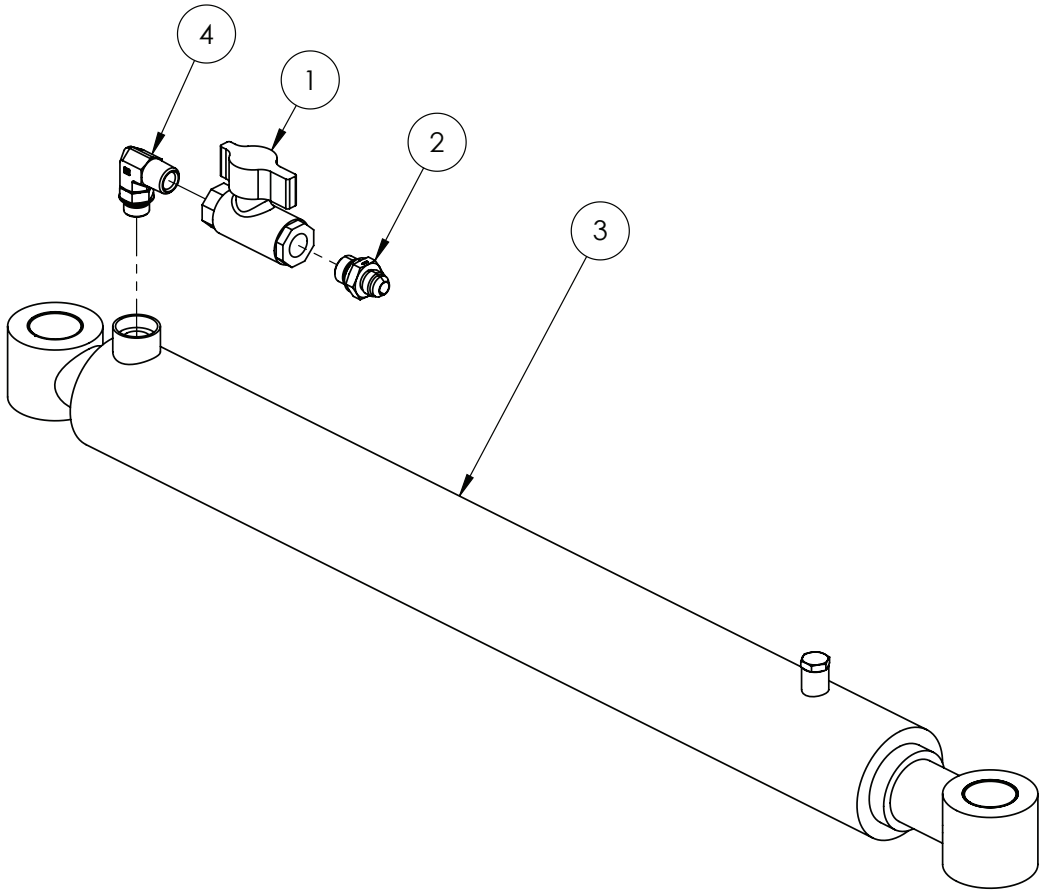

IF DESCRIPTION PREFIX IS ASSEMBLY DRAWING ONLY OR PRODUCTION DRAWING ONLY THE ITEM IS NOT FOR SALE			
ITEM	PART NUMBER	DESCRIPTION	QTY
1	GA5000835	BALL VALVE HYDRAULIC 1/2" FF	1
2	GA3500303	HYDRAULIC ADAPTOR NIPPLE, 1/2" BSPP TO 3/4" JIC	1
3	GA3500593	HYDRAULIC CYLINDER, DISPLACEMENT, 3" BORE, 2.5" ROD, 26" STROKE SUIT 1.5" PINS	1
4	GA3500349	HYDRAULIC ADAPTOR, ELBOW, 90 DEGREE, 1/2" BSPT MALE X 3/4" UN MALE O-RING	1
GA4950580 GOLDACRES		PRODUCTION DRAWING ONLY, LIFT HYDRAULIC CYLINDER	REV 00

Paralift Rear

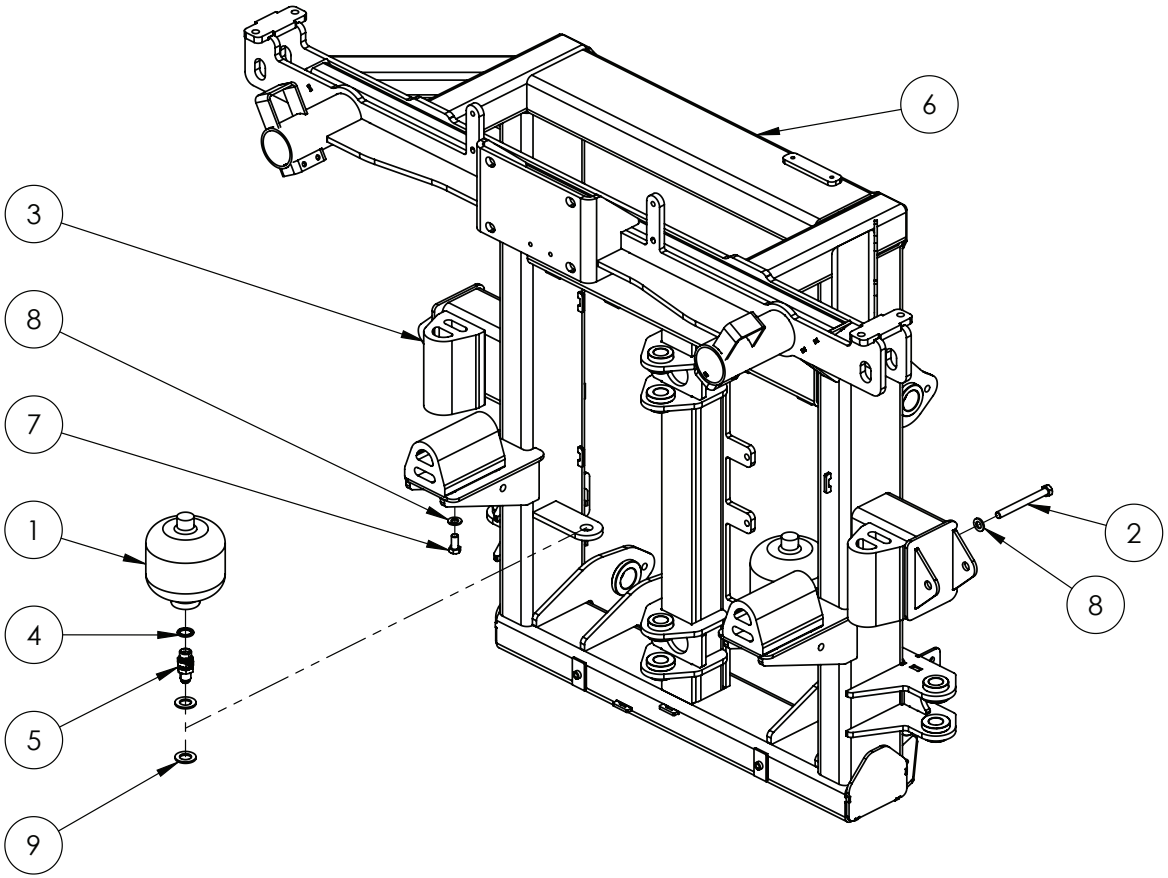

IF DESCRIPTION PREFIX IS ASSEMBLY DRAWING ONLY OR PRODUCTION DRAWING ONLY THE ITEM IS NOT FOR SALE			
ITEM	PART NUMBER	DESCRIPTION	QTY
1	GA5007787	ACCUMULATOR 1.0L PRECHARGE 70 BAR	2
2	GA5000265	BOLT M12 X 130 GR8.8 ZP	2
3	GA5075240	BUMP STOP RUBBER WITH THREADED INSERT	4
4	GA3500159	HYDRAULIC SEAL, BONDED, 1/2", RL21D-08	2
5	GA3500717	HYDRAULIC ADAPTOR, BULKHEAD NIPPLE, 1/2" BSPP MALE X 3/4" JIC MALE, S130P-0812	2
6	GA4605131	PARALIFT REAR MY25	1
7	GA5011229	SET SCREW M12 X 25 GR8.8 ZP	2
8	GA5000577	WASHER M12 FLAT SS HD	4
9	GA5001741	WASHER M20 FLAT SS HD	4
GA6101940-01 GOLDACRES		ASSEMBLY DRAWING ONLY, CENTRE AND PARALIFT REAR, LF SP S3, MY25	REV 00

Delta Link, Long, Mounting

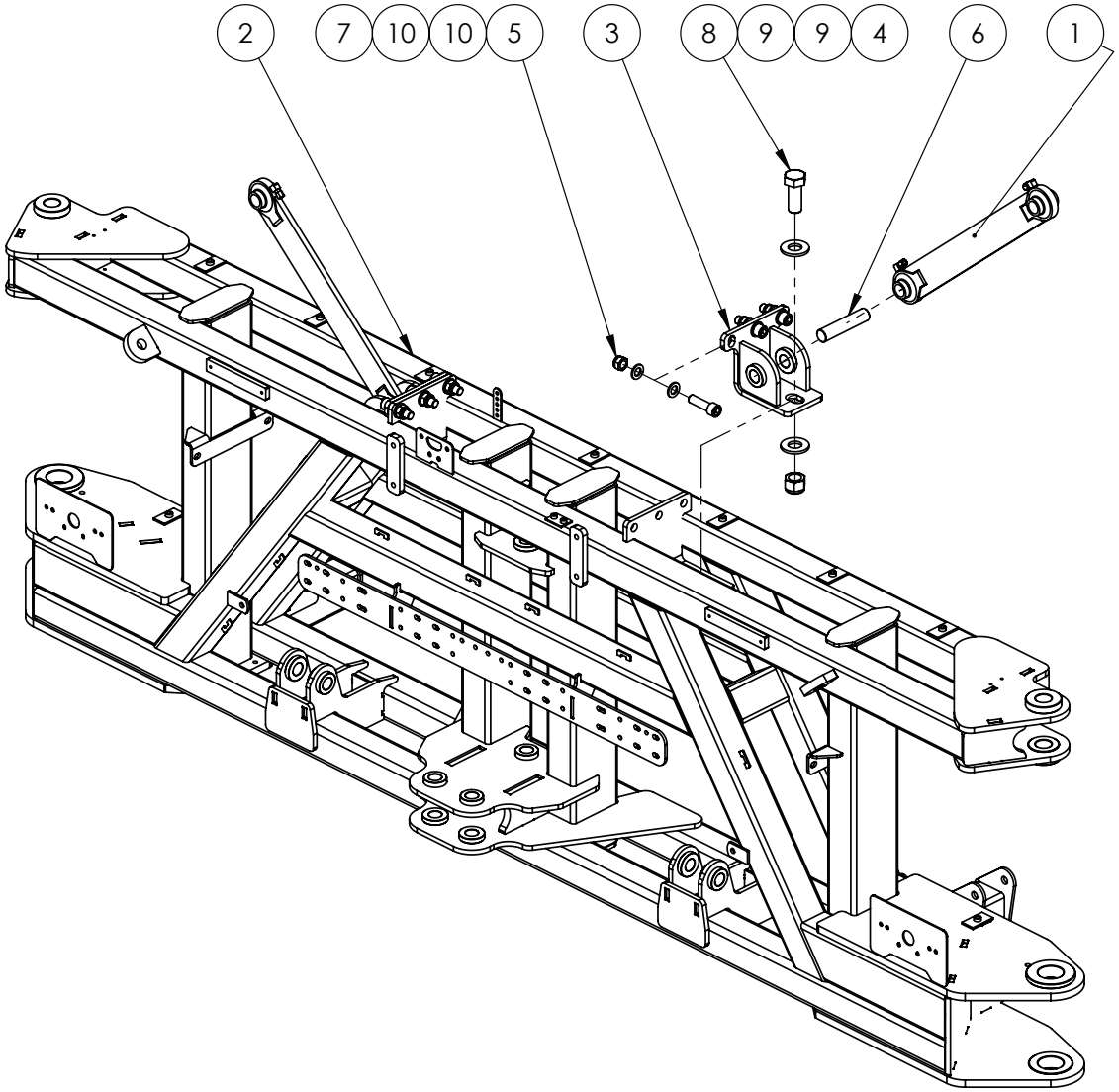

IF DESCRIPTION PREFIX IS ASSEMBLY DRAWING ONLY OR PRODUCTION DRAWING ONLY THE ITEM IS NOT FOR SALE			
ITEM	PART NUMBER	DESCRIPTION	QTY
1	GA4951390	ASSEMBLY DRAWING ONLY, LONG DELTA LINK, AUTO-GREASE CONFIGURATION	2
2	GA4600601	CENTRE SECTION, 36m - 48m BOOM, MY20	1
3	GA4600605	DELTA LINK MOUNT, CENTRE SECTION, 48m BOOM	2
4	GA5012446	NUT 1" NYLOC UNF 12 ZP	2
5	GA5001029	NUT M16 NYLOC ZP	6
6	GA4550495	PIN, DELTA LINK CENTRE SECTION MOUNT, 1" OD X 120mm LONG	2
7	GA5003687	SHCS M16 X 55 GR 12.9 ZP	6
8	GA0500027	SET SCREW 1" UNF 12TPI X 2 1/2" GR8 ZP	2
9	GA5017659	WASHER 1" FLAT ZP HD	4
10	GA5001043	WASHER M16 FLAT SS HD	12
GA6101940-02 GOLDACRES		ASSEMBLY DRAWING ONLY, CENTRE AND PARALIFT REAR, LF SP S3, MY25	REV 00.A

Delta Link, Long

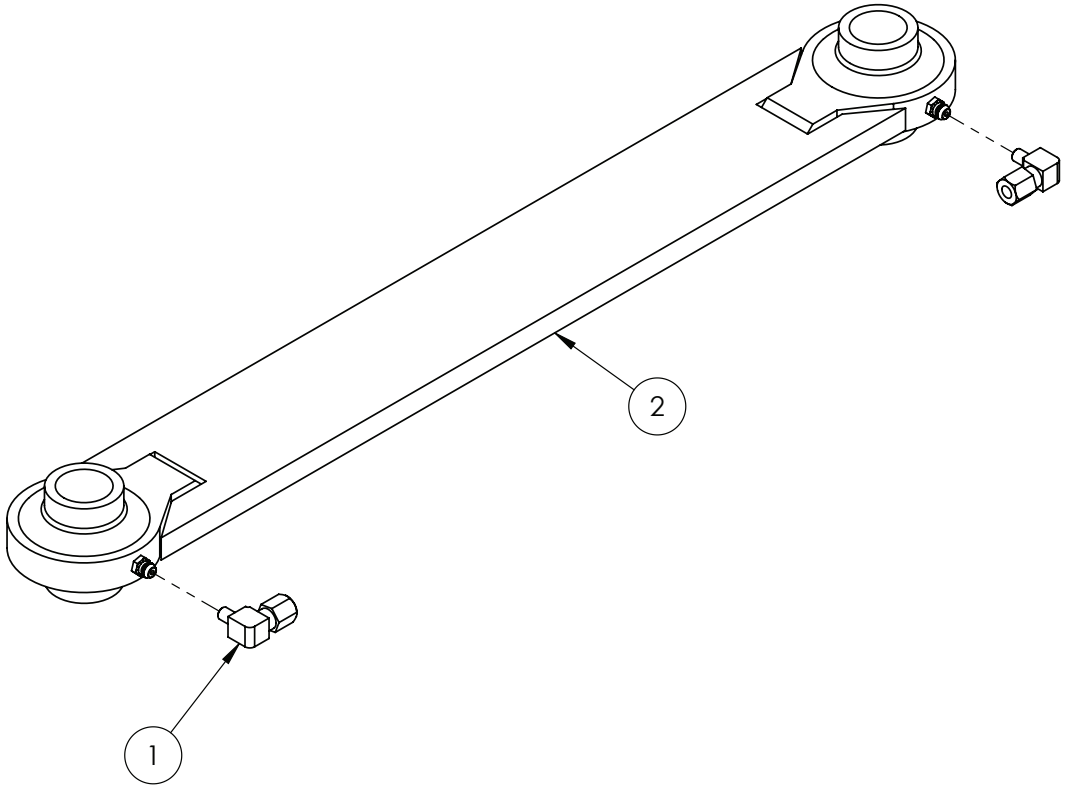

IF DESCRIPTION PREFIX IS ASSEMBLY DRAWING ONLY OR PRODUCTION DRAWING ONLY THE ITEM IS NOT FOR SALE			
ITEM	PART NUMBER	DESCRIPTION	QTY
1	GA5069995	GREASE FITTING LINE CONNECTOR ELBOW 6mm	2
2	GA4656240	LONG DELTA LINK	1
GA4951390 GOLDACRES		ASSEMBLY DRAWING ONLY, LONG DELTA LINK, AUTO-GREASE CONFIGURATION	REV 01

NOTE:

REMOVE GREASE NIPPLES SUPPLIED WITH DELTA LINK AND REPLACE WITH ITEM (1)

Delta Link, Short, Mounting

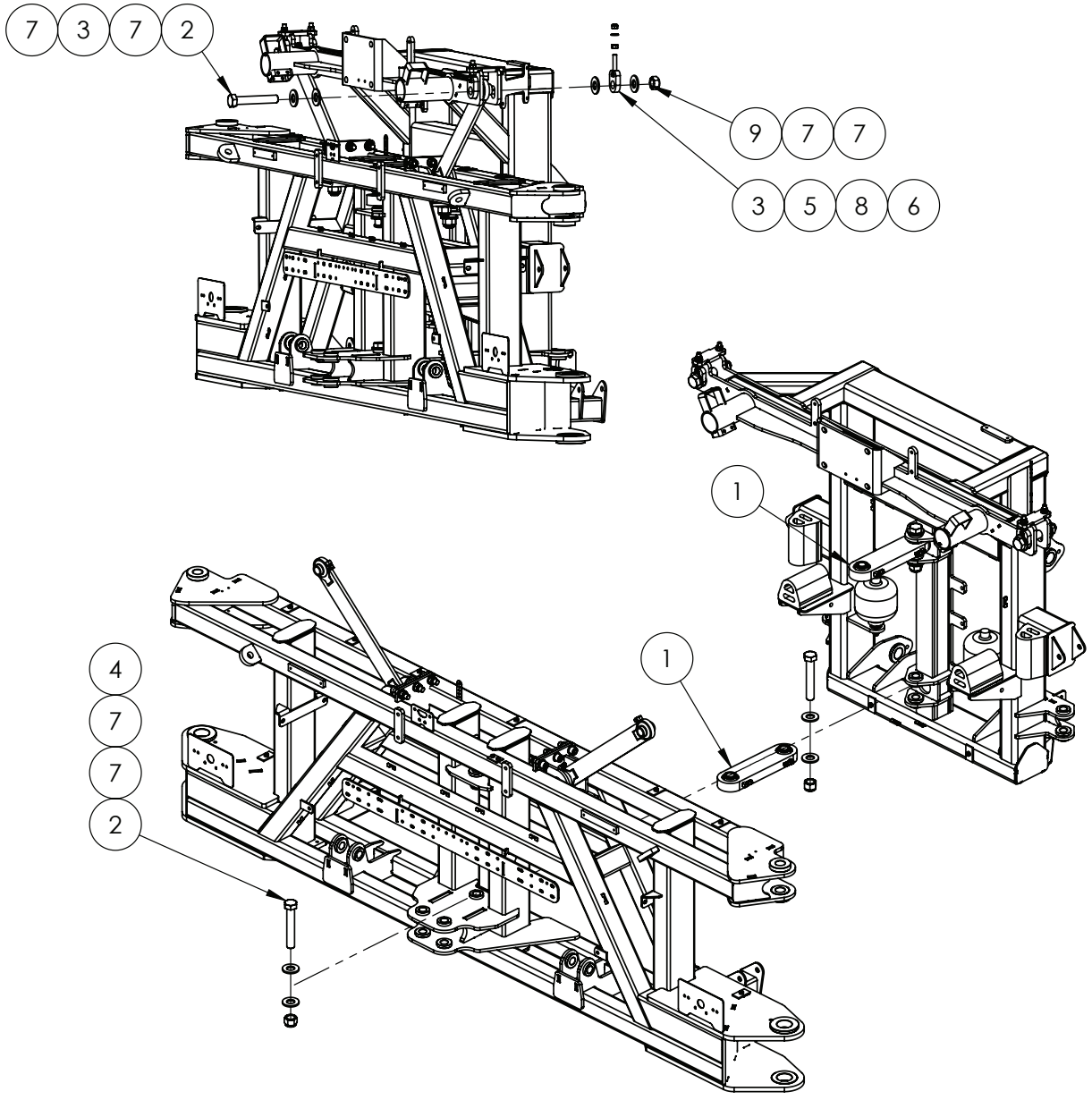

IF DESCRIPTION PREFIX IS ASSEMBLY DRAWING ONLY OR PRODUCTION DRAWING ONLY THE ITEM IS NOT FOR SALE			
ITEM	PART NUMBER	DESCRIPTION	QTY
1	GA6101600	ASSEMBLY DRAWING ONLY. DELTA LINK, MY20 G6 36, 42M BOOM AND ALL 48M BOOMS	2
2	GA4683145	BOLT 1" UNC X 6" GR8 ZP - 7" CUT DOWN	6
3	GA4656260	BOOM DELTA HANGER ADJUSTER BOLT	4
4	GA5012439	NUT 1" NYLOC UNC ZP	4
5	GA5000559	NUT M12 HEX ZP	4
6	GA5012461	NUT M12 NYLOC ZP	4
7	GA5017659	WASHER 1" FLAT ZP HD	16
8	GA5000577	WASHER M12 FLAT SS HD	4
9	GA0500224	NUT 1" CONELOCK	2
GA6101940-03 GOLDACRES		ASSEMBLY DRAWING ONLY, CENTRE AND PARALIFT REAR, LF SP S3, MY25	REV 01

Delta Link, Short

TOP DELTA LINK

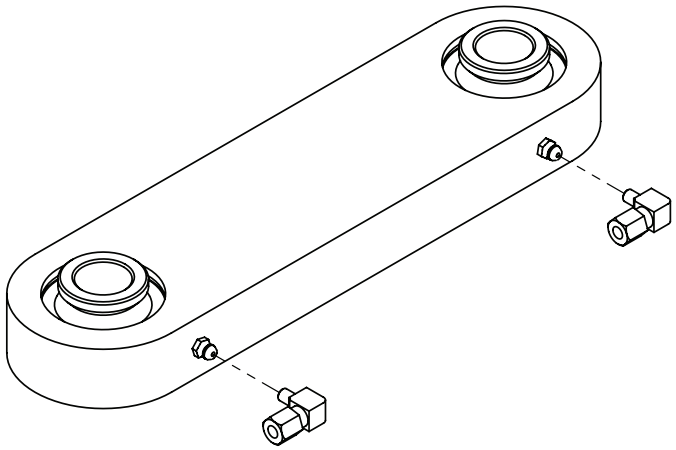

BOTTOM DELTA LINK

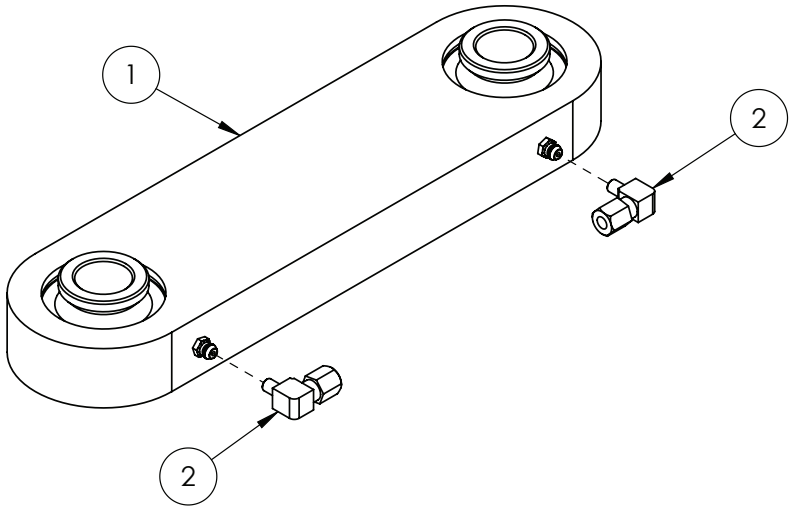

NOTE:

REMOVE GREASE NIPPLES SUPPLIED WITH DELTA LINK AND REPLACE WITH ITEM (2)

IF DESCRIPTION PREFIX IS ASSEMBLY DRAWING ONLY OR PRODUCTION DRAWING ONLY THE ITEM IS NOT FOR SALE			
ITEM	PART NUMBER	DESCRIPTION	QTY
1	GA5067855	DELTA LINK, SHORT, HEAVY DUTY	1
2	GA5069995	GREASE FITTING LINE CONNECTOR ELBOW 6mm	2
GA6101600 GOLDACRES		ASSEMBLY DRAWING ONLY. DELTA LINK, MY20 G6 36, 42M BOOM AND ALL 48M BOOMS	REV 00

Hydraulic Yaw Mounting

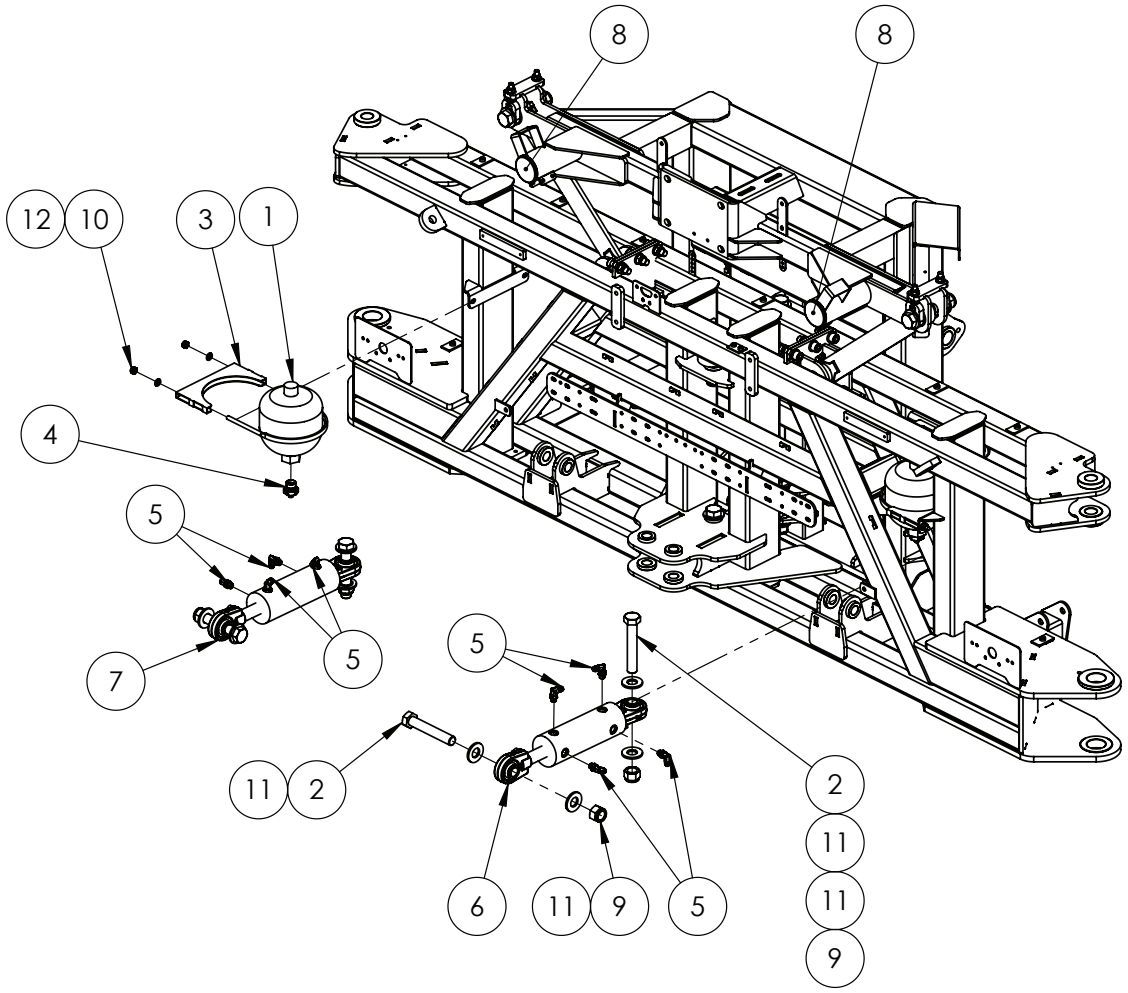

IF DESCRIPTION PREFIX IS ASSEMBLY DRAWING ONLY OR PRODUCTION DRAWING ONLY THE ITEM IS NOT FOR SALE			
ITEM	PART NUMBER	DESCRIPTION	QTY
1	GA3500021	ACCUMULATOR, HYDRAULIC, 2L, 90 BAR PRE CHARGE, SUIT 42M YAW	2
2	GA4683145	BOLT 1" UNC X 6" GR8 ZP - 7" CUT DOWN	4
3	GA5070025	EXHAUST CLAMP - 7"	2
4	S74-1209	HYDRAULIC ADAPTER, NIPPLE, 3/4" BSPP O-RING MALE X 9/16" JIC MALE, S74-1209	2
5	GA3500716	HYDRAULIC ADAPTOR, ELBOW, 90 DEGREE, 9/16" JIC MALE X 9/16" UN MALE O-RING, S91-0909	8
6	GA5060818	HYDRAULIC YAW CYLINDER LARGE 3" WITH BALL ENDS	1
7	GA5060818	HYDRAULIC YAW CYLINDER LARGE 3" WITH BALL ENDS	1
8	GA5050355	INSERT TO SUIT 65NB TUBE	2
9	GA5012439	NUT 1" NYLOC UNC ZP	4
10	GA5000141	NUT M10 NYLOC ZP	4
11	GA5017659	WASHER 1" FLAT ZP HD	8
12	GA5000117	WASHER M10 FLAT SS HD	4
GA6101940-04 GOLDACRES		ASSEMBLY DRAWING ONLY, CENTRE AND PARALIFT REAR, LF SP S3, MY25	REV 00.A

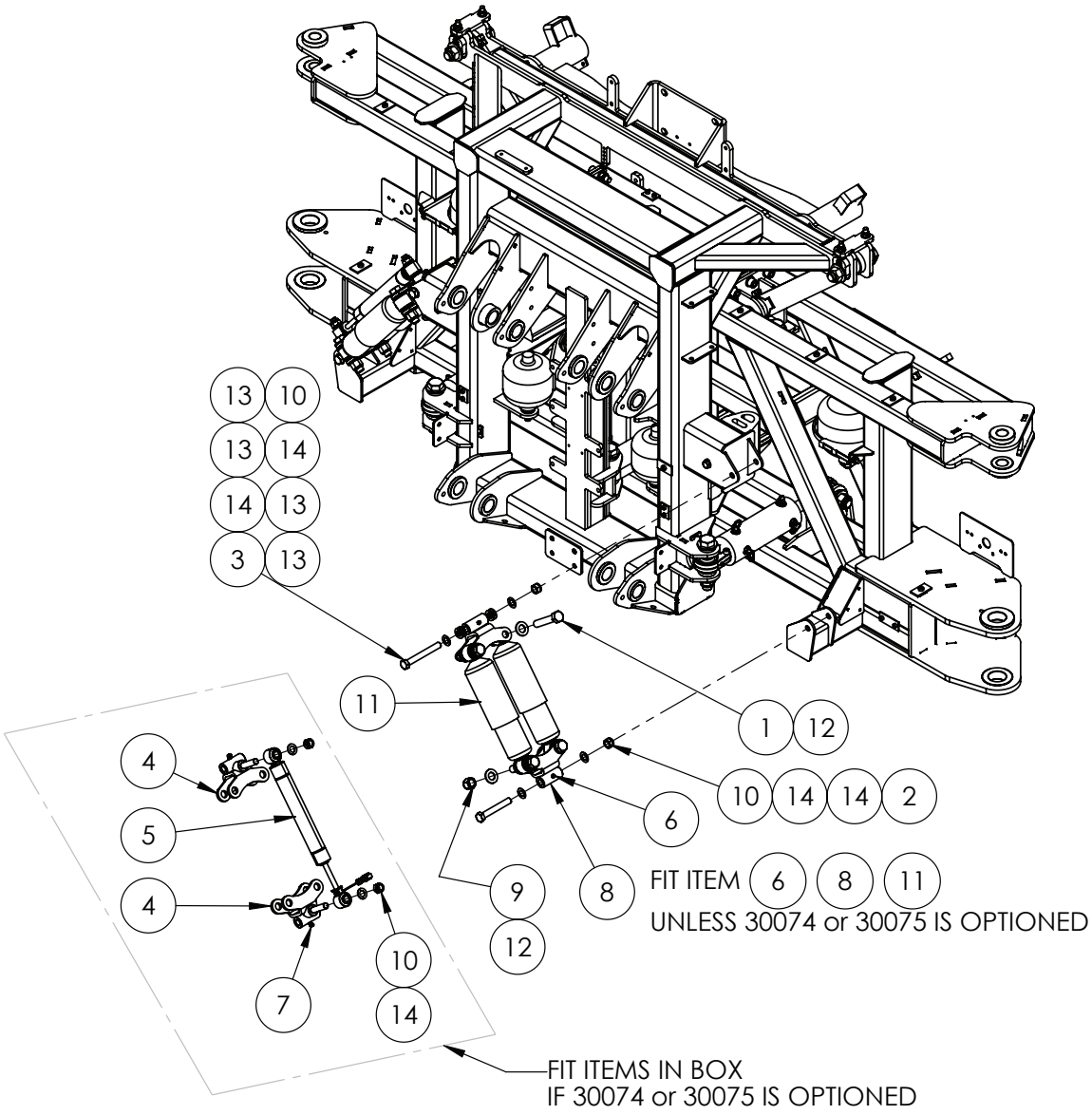

IF DESCRIPTION PREFIX IS ASSEMBLY DRAWING ONLY OR PRODUCTION DRAWING ONLY THE ITEM IS NOT FOR SALE			
ITEM	PART NUMBER	DESCRIPTION	QTY
1	GA5049490	BOLT 3/4" UNC X 4" GR8 ZP	8
2	GA5000855	BOLT M16 X 110 GR8.8 ZP	2
3	GA5000861	BOLT M16 X 130 GR8.8 ZP	2
4	GA4602475	CENTRE ROLL SHOCKER MOUNT WITH RAVEN XRT VARIABLE DAMPER MOUNT	4
5	GA3000379	DAMPER, VARIABLE, RAVEN	2
6	GA5012203	GREASE NIPPLE, SHORT, 1/4 UNF, MACH0207	4
7	GA5009637	GREASE NIPPLE, ELBOW, 90 DEGREE, 1/4 UNF MALE, MACH0207	4
8	GA4659360	MOUNTING BRACKET, DUAL ROLL SHOCK ABSORBER, CENTRE	4
9	GA5048430	NUT 3/4" NYLOC UNC ZP	8
10	GA5001029	NUT M16 NYLOC ZP	8
11	GA5015139	SHOCK ABSORBER, DOUBLE EYE, 19mm EYE, 82mm OD, BLACK	4
12	GA5001045	WASHER 3/4" FLAT ZP	16
13	GA5001043	WASHER M16 FLAT SS HD	8
14	GA5001055	WASHER M16 FLAT SS	12
GA6101940-05 GOLDACRES		ASSEMBLY DRAWING ONLY, CENTRE AND PARALIFT REAR, LF SP S3, MY25	REV 01

Boom Mount Hinge Bracket

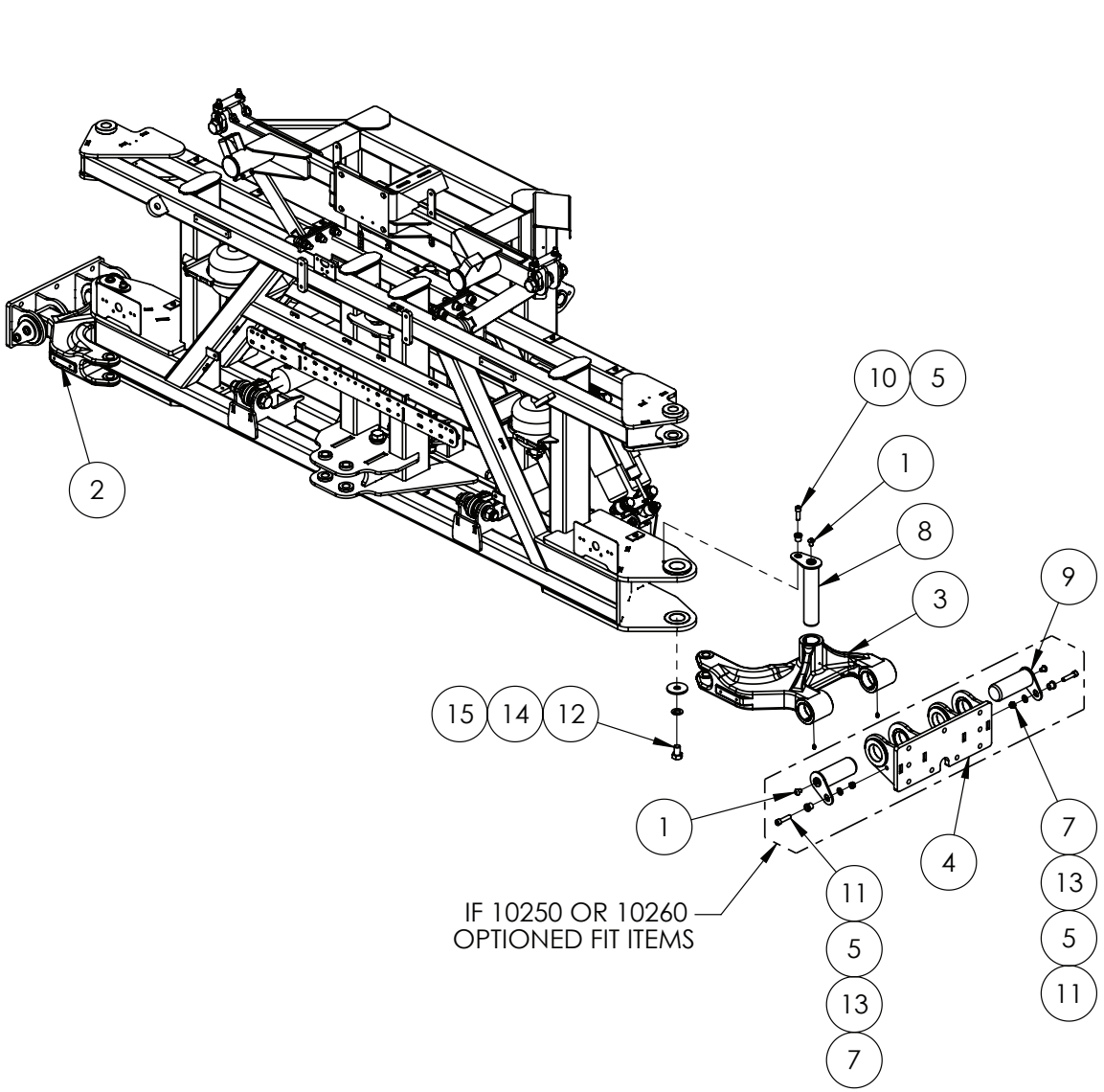

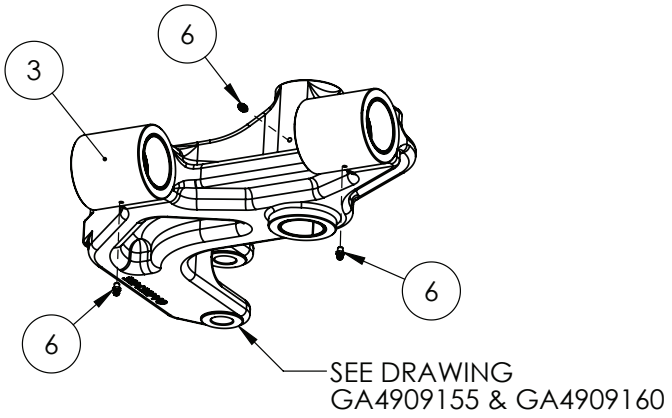

IF DESCRIPTION PREFIX IS ASSEMBLY DRAWING ONLY OR PRODUCTION DRAWING ONLY THE ITEM IS NOT FOR SALE			
ITEM	PART NUMBER	DESCRIPTION	QTY
1	GA5069890	BHCS M12 X 16 GR12.9 ZP	6
2	GA4909160	PRODUCTION DRAWING ONLY, BOOM MOUNT HINGE, LH	1
3	GA4909155	PRODUCTION DRAWING ONLY, BOOM MOUNT HINGE, RH	1
4	GA4602100	BOOM MOUNT, INNER WING, TRITECH, MY20	2
5	MACH0152	BUSH WITH SHOULDER, 12.3 ID X 25 OD X 21 LONG, SUIT PARALIFT PIN BOLTS	6
6	GA5050450	GREASE NIPPLE, 6mm	6
7	GA5012461	NUT M12 NYLOC ZP	4
8	GA4600620	PIN, BOOM FOLD PIVOT, 50mm OD, FABRICATED,	2
9	GA4600625	PIN, BOOM TILT PIVOT, 60mm OD, FABRICATED, 48M	4
10	GA5000313	SHCS M12 X 35 GR12.9 ZP	2
11	GA5051470	SHCS M12 X 50 GR 12.9 ZP	4
12	GA5011323	SET SCREW M20 X 30 GR8.8 ZP	2
13	GA5000577	WASHER M12 FLAT SS HD	4
14	GA5001741	WASHER M20 FLAT SS HD	2
15	L073A	WASHER SUIT DRAWBAR PIN	2
GA6101940-06 GOLDACRES		ASSEMBLY DRAWING ONLY, CENTRE AND PARALIFT REAR, LF SP S3, MY25	REV 00

RH Boom Mount Hinge

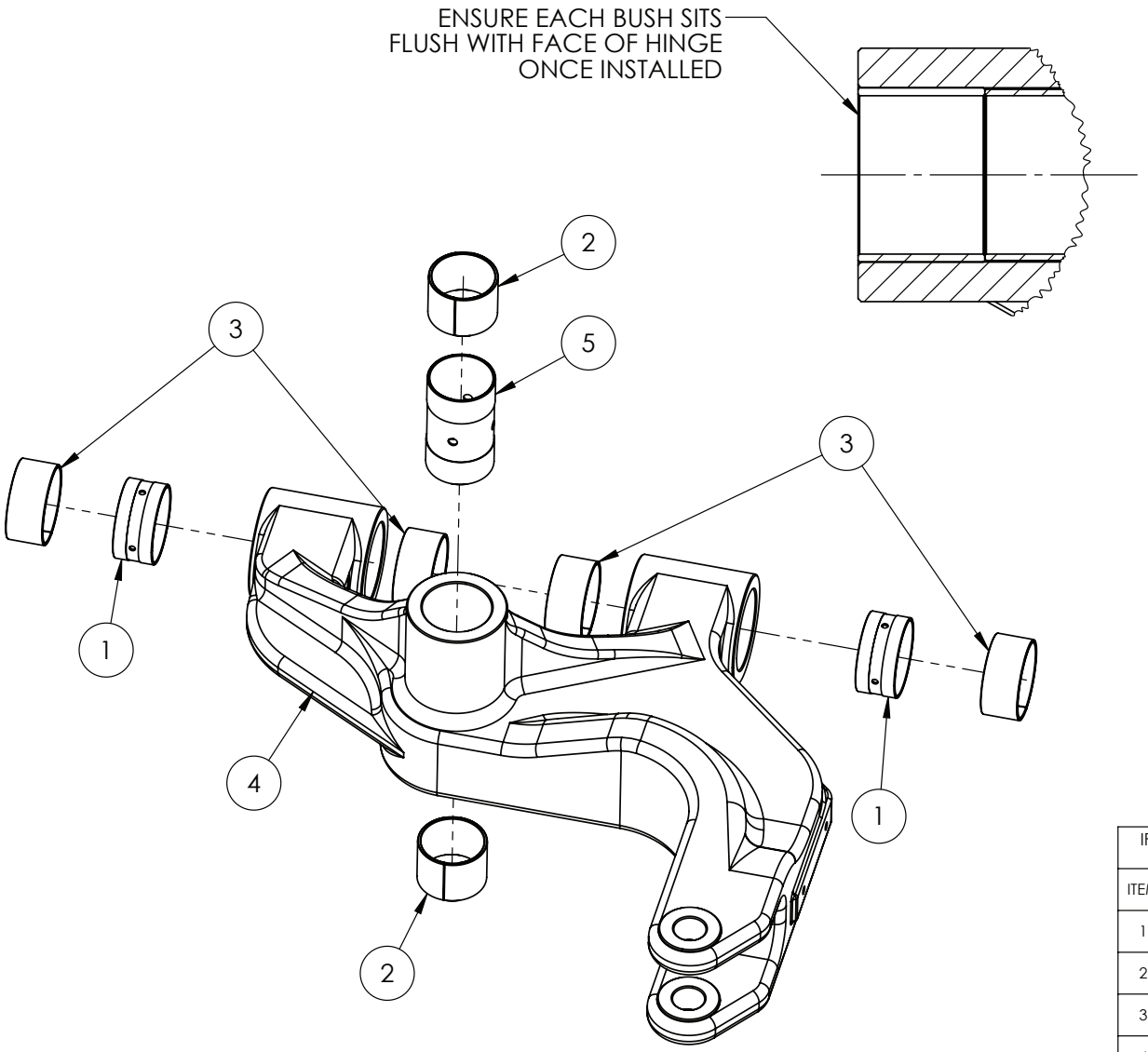

IF DESCRIPTION PREFIX IS ASSEMBLY DRAWING ONLY OR PRODUCTION DRAWING ONLY THE ITEM IS NOT FOR SALE			
ITEM	PART NUMBER	DESCRIPTION	QTY
1	GA4551460	BEARING, GLACIER BUSH SPACER, 60mm ID X 32mm LONG, 48M BOOM TILT PIVOT	2
2	GA1700012	BEARING, GLACIER BUSH, 50mm ID X 40mm LONG	2
3	GA1700011	BEARING, GLACIER BUSH, 60mm ID X 30mm LONG	4
4	GA4551455	BOOM MOUNT HINGE, RH,CAST, 48M BOOM	1
5	GA4551635	BUSH, BOOM MOUNT HINGE, FOLD AXIS, GLACIER BUSH SPACER	1
GA4909155 GOLDACRES		PRODUCTION DRAWING ONLY, BOOM MOUNT HINGE, RH	REV 00

LH Boom Mount Hinge

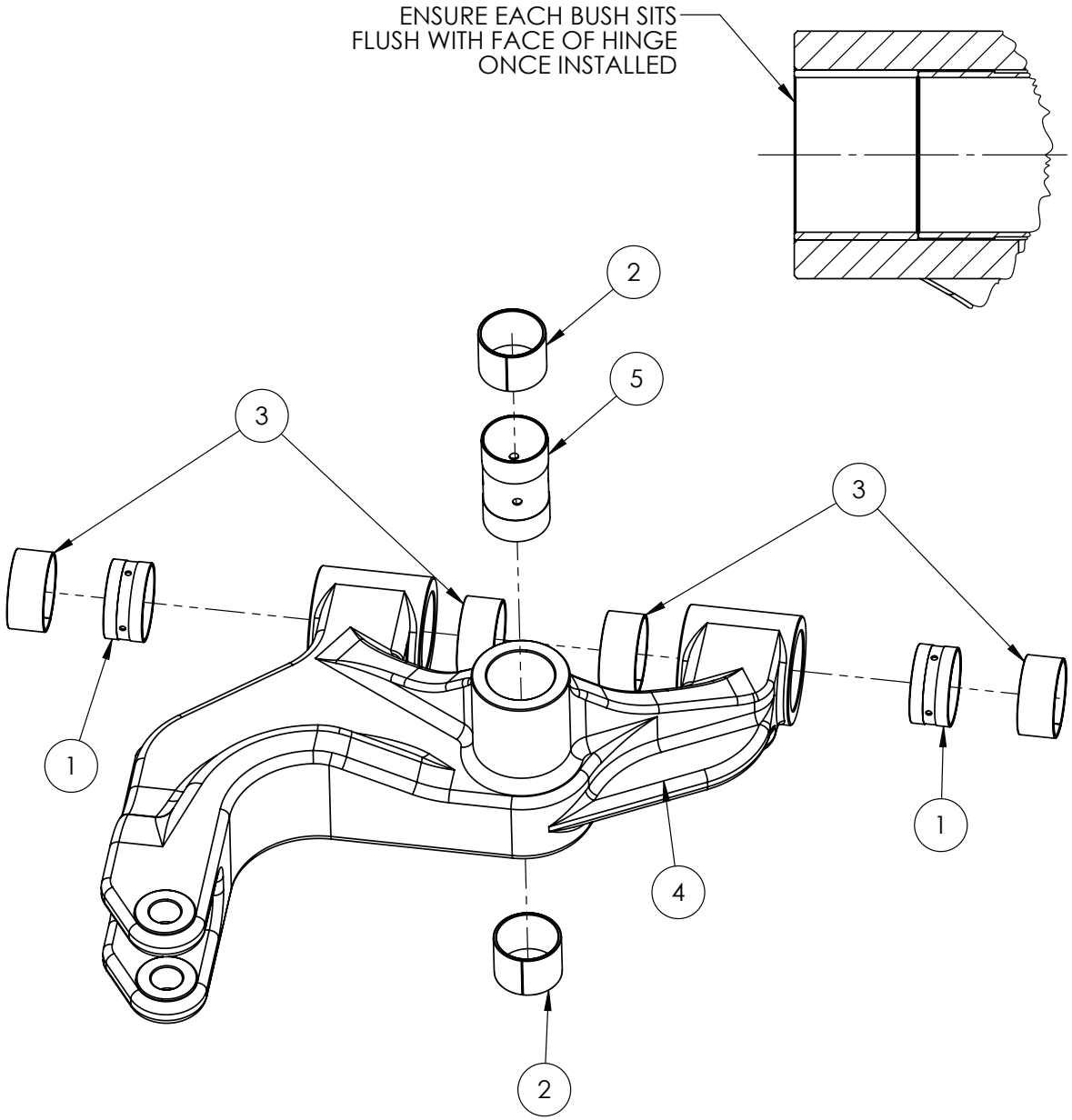

IF DESCRIPTION PREFIX IS ASSEMBLY DRAWING ONLY OR PRODUCTION DRAWING ONLY THE ITEM IS NOT FOR SALE			
ITEM	PART NUMBER	DESCRIPTION	QTY
1	GA4551460	BEARING, GLACIER BUSH SPACER, 60mm ID X 32mm LONG, 48M BOOM TILT PIVOT	2
2	GA1700012	BEARING, GLACIER BUSH, 50mm ID X 40mm LONG	2
3	GA1700011	BEARING, GLACIER BUSH, 60mm ID X 30mm LONG	4
4	GA4551450	BOOM MOUNT HINGE, LH, CAST. 48M BOOM	1
5	GA4551635	BUSH, BOOM MOUNT HINGE, FOLD AXIS, GLACIER BUSH SPACER	1
GA4909160 GOLDACRES		PRODUCTION DRAWING ONLY, BOOM MOUNT HINGE, LH	REV 00

Tilt & Fold Cylinder Mounting

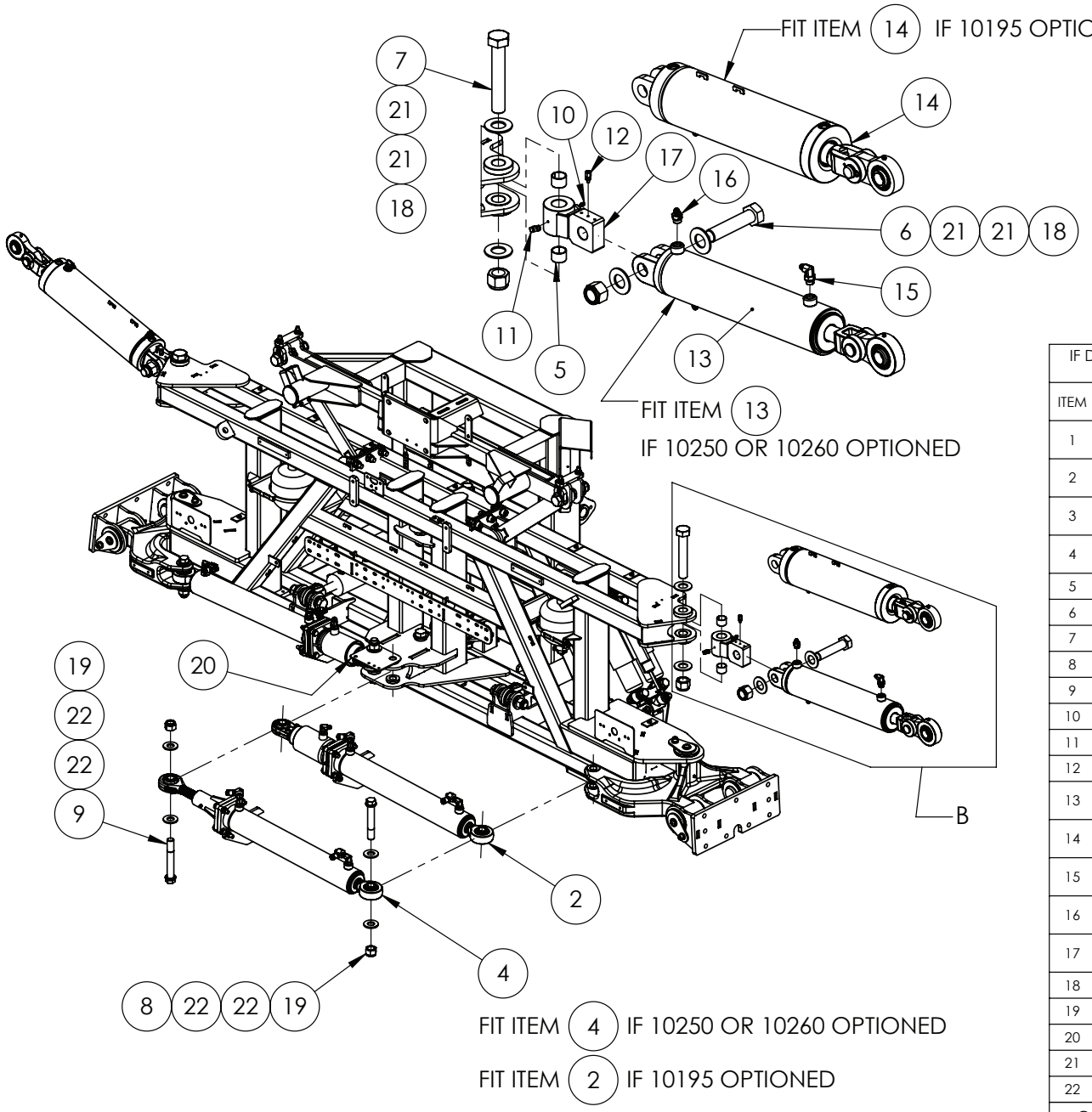

IF DESCRIPTION PREFIX IS ASSEMBLY DRAWING ONLY OR PRODUCTION DRAWING ONLY THE ITEM IS NOT FOR SALE			
ITEM	PART NUMBER	DESCRIPTION	QTY
1	GA3500840	ASSEMBLY DRAWING ONLY, HYDRAULIC CYLINDER, FOLD, 48M, G6, MY20 LEFT	1
2	GA3500840	ASSEMBLY DRAWING ONLY, HYDRAULIC CYLINDER, FOLD, 48M, G6, MY20 RIGHT	1
3	GA4909485	ASSEMBLY DRAWING ONLY, HYDRAULIC CYLINDER, LEFT HAND, FOLD, 36-42M, LF SP S3, MY25	1
4	GA4909485	ASSEMBLY DRAWING ONLY, HYDRAULIC CYLINDER, RIGHT HAND, FOLD, 36-42M, LF SP S3, MY25	1
5	GA5073725	BEARING, GLACIER BUSH, 1 1/2" ID X I" LONG	4
6	GA0500073	BOLT 1 1/4" UNC X 5 1/2" GR8 ZP	2
7	GA0500138	BOLT 1 1/4" UNC X 7 1/2" GR8 ZP	2
8	GA4553238	BOLT, 1" UNC X 6", EN26, ZP	2
9	GA4553243	BOLT, 1" UNC X 6 1/2", EN26, ZP	2
10	GA5050450	GREASE NIPPLE, 6mm	2
11	GA5069995	GREASE FITTING LINE CONNECTOR ELBOW 6mm	2
12	GA5069985	GREASE FITTING LINE CONNECTOR STRAIGHT 6mm	2
13	GA3500835	HYDRAULIC CYLINDER, BORE 4", ROD 1.5", STROKE 300mm	2
14	GA3501852	HYDRAULIC CYLINDER, BORE 5", ROD 2.0", STROKE 300mm	2
15	GA3500700	HYDRAULIC ADAPTOR, ELBOW, 90 DEGREE, 9/16" JIC MALE X 3/4" UN MALE O-RING, S91-0912	2
16	GA3500147	HYDRAULIC ADAPTOR, NIPPLE, 9/16" JIC MALE X 3/4" UN MALE O-RING, S90-0912	2
17	GA4602930	KNUCKLE, CENTRE SECTION, TILT CYLINDER, TRITECH, MY20	2
18	GA0500071	NUT 1 1/4" NYLOC UNC ZP	4
19	GA5012439	NUT 1" NYLOC UNC ZP	4
20	GA4406820	PLATE, REVERSE LIGHT AND CAMERA MOUNT	1
21	GA0500072	WASHER 1 1/4" X 2 5/8" FLAT ZP	8
22	GA5017659	WASHER 1" FLAT ZP HD	8
GA6101940-07 GOLDACRES		ASSEMBLY DRAWING ONLY, CENTRE AND PARALIFT REAR, LF SP S3, MY25	REV 01

Hydraulic Cylinder Assembly, Fold, 36mt - 42mt

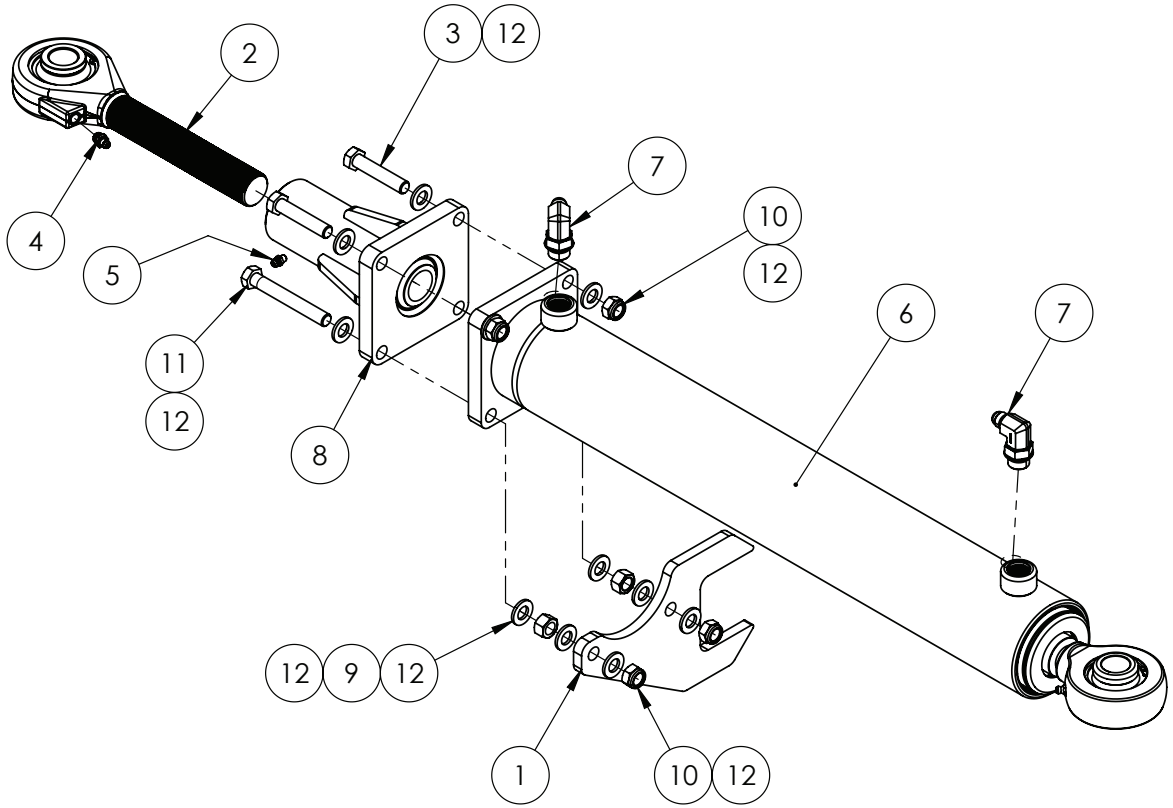

RIGHT HAND CONFIGURATION SHOWN

IF DESCRIPTION PREFIX IS ASSEMBLY DRAWING ONLY OR PRODUCTION DRAWING ONLY THE ITEM IS NOT FOR SALE			
ITEM	PART NUMBER	DESCRIPTION	QTY
1	GA5073235	ANTI ROTATION BRACKET, HYDRAULIC FOLD CYLINDER, 48m BOOM	1
2	GA5078654	BEARING END, ASSEMBLY, 1 1/4-12 UNF THREAD, C/W GEH 35 ES-2RS BEARING, BUSHED DIA. 25.5	1
3	GA5000335	BOLT M12 X 60 GR8.8 ZP	2
4	GA5069980	GREASE NIPPLE, 1/8 BSPP, STRAIGHT	1
5	GA5050450	GREASE NIPPLE, 6mm	1
6	GA3500655	HYDRAULIC CYLINDER, DOUBLE ACTING, 3.25" BORE, 1.5" ROD, FLANGE BASE MOUNT, 1" ROSE END	1
7	GA3500700	HYDRAULIC ADAPTOR, ELBOW, 90 DEGREE, 9/16" JIC MALE X 3/4" UN MALE O-RING, S91-0912	2
8	GA4601820	MOUNT, FOLD CYLINDER BASE, 24 - 36m TRITECH, MY19	1
9	GA5000559	NUT M12 HEX ZP	2
10	GA5012461	NUT M12 NYLOC ZP	4
11	GA0500081	SET SCREW M12 X 90 GR8.8 ZP	2
12	GA5000577	WASHER M12 FLAT SS HD	12
GA4909485 GOLDACRES		ASSEMBLY DRAWING ONLY, HYDRAULIC CYLINDER, FOLD, G6, MY20	REV 00

Hydraulic Cylinder Assembly, Fold, 48mt

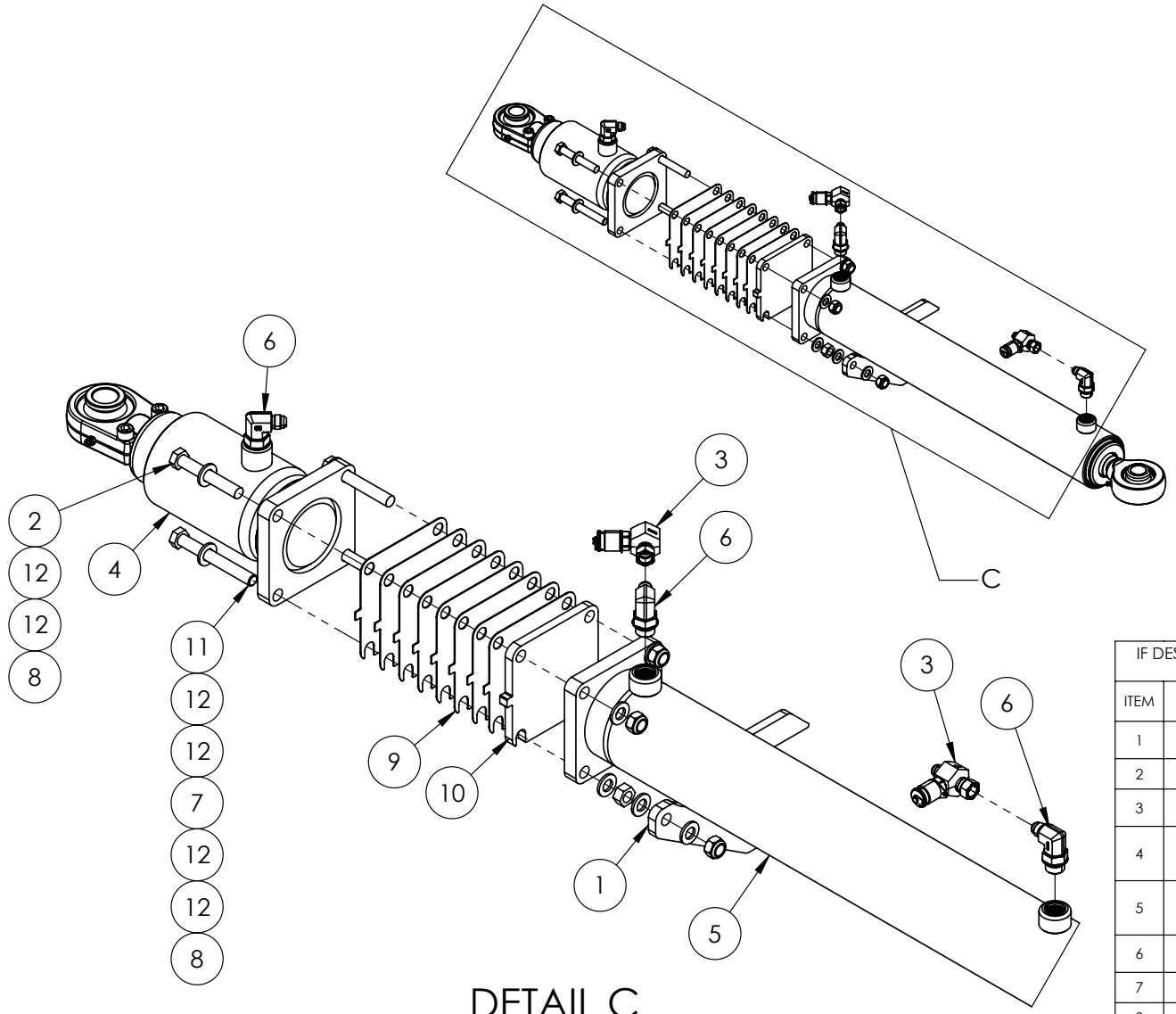

DETAIL C

NOTE:

FIT ITEM (3) IF SERIES 3 G6,G8

IF DESCRIPTION PREFIX IS ASSEMBLY DRAWING ONLY OR PRODUCTION DRAWING ONLY THE ITEM IS NOT FOR SALE			
ITEM	PART NUMBER	DESCRIPTION	QTY
1	GA5073235	ANTI ROTATION BRACKET, HYDRAULIC FOLD CYLINDER, 48m BOOM	1
2	GA5000355	BOLT M12 X 80 GR8.8 ZP	2
3	GA3501090	HYDRAULIC ADAPTOR, 9/16" JIC FEMALE SWIVEL X 9/16" JIC MALE X TEST POINT, S159-090916	2
4	GA3500656	HYDRAULIC CYLINDER, DISPLACMENT (CUSHION), 3.25" BORE, 3" ROD, FLANGE BASE MOUNT, 1" ROSE END	1
5	GA3500655	HYDRAULIC CYLINDER, DOUBLE ACTING, 3.25" BORE, 1.5" ROD, FLANGE BASE MOUNT, 1" ROSE END	1
6	GA3500700	HYDRAULIC ADAPTOR, ELBOW, 90 DEGREE, 9/16" JIC MALE X 3/4" UN MALE O-RING, S91-0912	3
7	GA5000559	NUT M12 HEX ZP	2
8	GA5012461	NUT M12 NYLOC ZP	4
9	GA4500975	PLATE, SHIM, FOLD CYLINDER, 48M BOOM	8
10	GA4500976	PLATE, SHIM, 10mm, FOLD CYLINDER, 48M BOOM	1
11	GA5000261	SET SCREW M12 X 100 GR8.8 ZP	2
12	GA5000577	WASHER 12mm FLAT SS HD	12
GA3500840 GOLDACRES		ASSEMBLY DRAWING ONLY, HYDRAULIC CYLINDER, FOLD, 48M, G6, MY20	REV 01

Hydraulic Centre Leveling

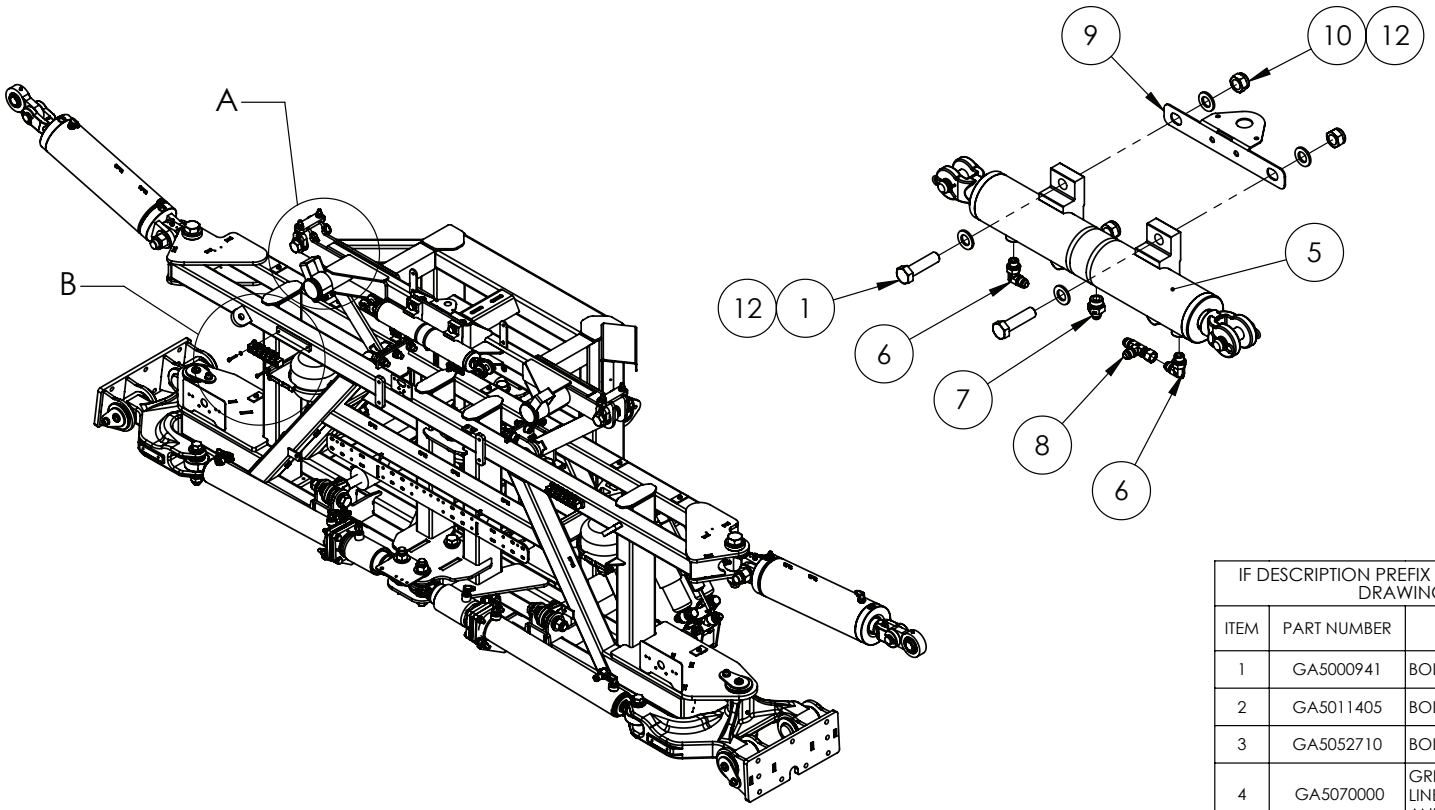

DETAIL B

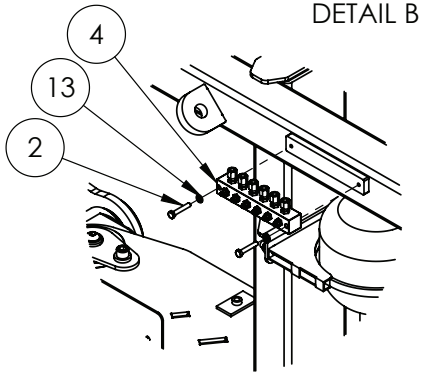

DETAIL A

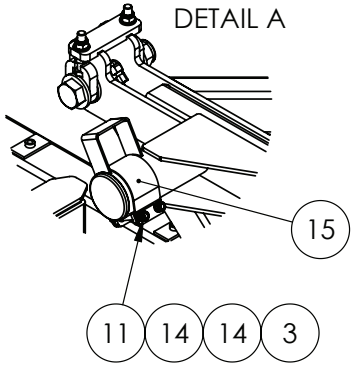

FIT ITEM (2) (4) (13) IF 20062 OPTIONED

IF DESCRIPTION PREFIX IS ASSEMBLY DRAWING ONLY OR PRODUCTION DRAWING ONLY THE ITEM IS NOT FOR SALE			
ITEM	PART NUMBER	DESCRIPTION	QTY
1	GA5000941	BOLT M16 X 60 GR8.8 ZP	4
2	GA5011405	BOLT M6 X 35 GR8.8 ZP	4
3	GA5052710	BOLT M8 X 65 GR8.8 ZP	4
4	GA5070000	GREASE FITTING HEADER BLOCK 6 WAY, INC. 6mm LINE ADAPTORS AND STRAIGHT GREASE NIPPLES AND PLUGS	2
5	GA3500477	HYDRAULIC CYLINDER, CENTRE LEVEL 2016	1
6	GA3500716	HYDRAULIC ADAPTOR, ELBOW, 90 DEGREE, 9/16" JIC MALE X 9/16" UN MALE O-RING, S91-0909	2
7	GA3500147	HYDRAULIC ADAPTOR, NIPPLE, 9/16" JIC MALE X 3/4" UN MALE O-RING, S90-0912	1
8	GA3500144	HYDRAULIC ADAPTOR, TEE, 9/16" JIC MALE X 9/16" JIC MALE X 9/16" JIC FEMALE SWIVEL, S67-090909	1
9	GA4525240	MOUNTING PLATE, BOLT ON BEACON SUIT CENTRE SECTION	1
10	GA5001029	NUT M16 NYLOC ZP	4
11	GA5004917	NUT M8 NYLOC ZP	4
12	GA5001043	WASHER M16 FLAT SS HD	8
13	GA5004437	WASHER M6 FLAT SS HD	4
14	GA5003643	WASHER M8 FLAT SS HD	8
15	GA4506750	WEAR STRIP SS FOR CENTRE LEVELING CABLES	2
GA6101940-08 GOLDACRES		ASSEMBLY DRAWING ONLY, CENTRE AND PARALIFT REAR, LF SP S3, MY25	REV 00

Hydraulic Boom Manifold, Mounting, Centre Section

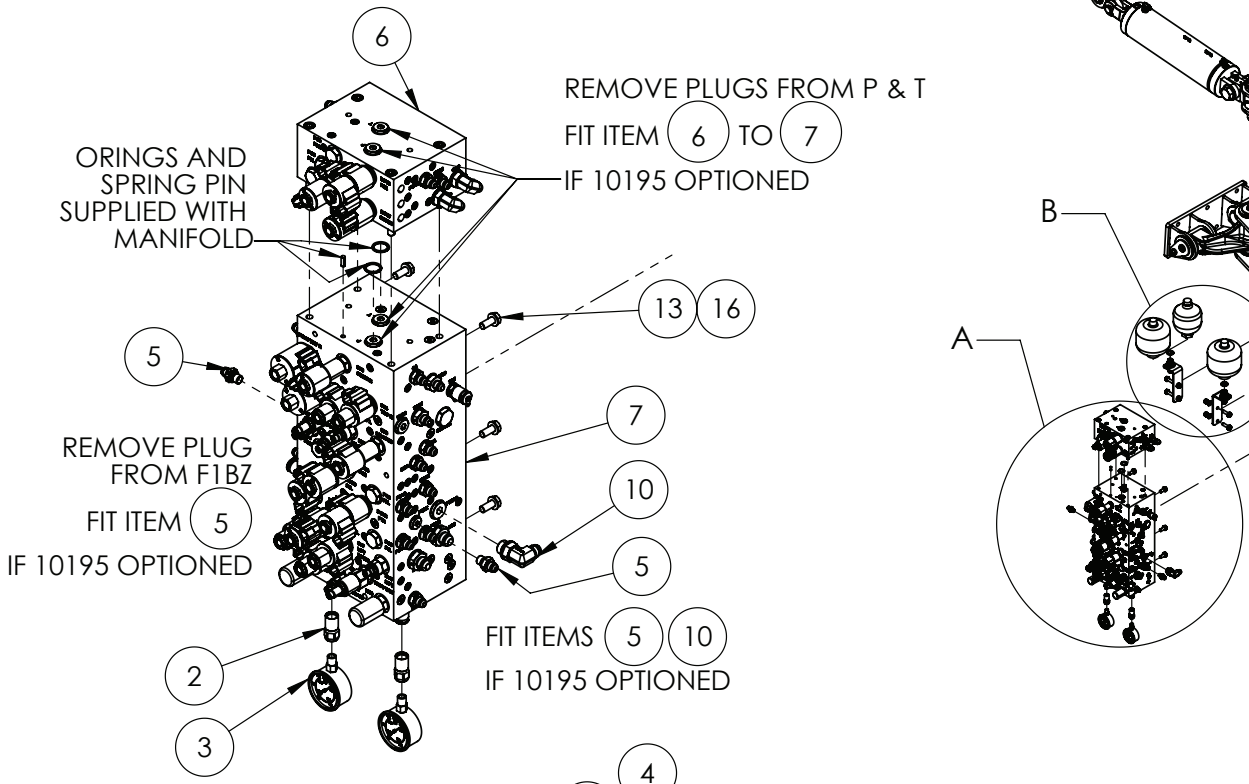

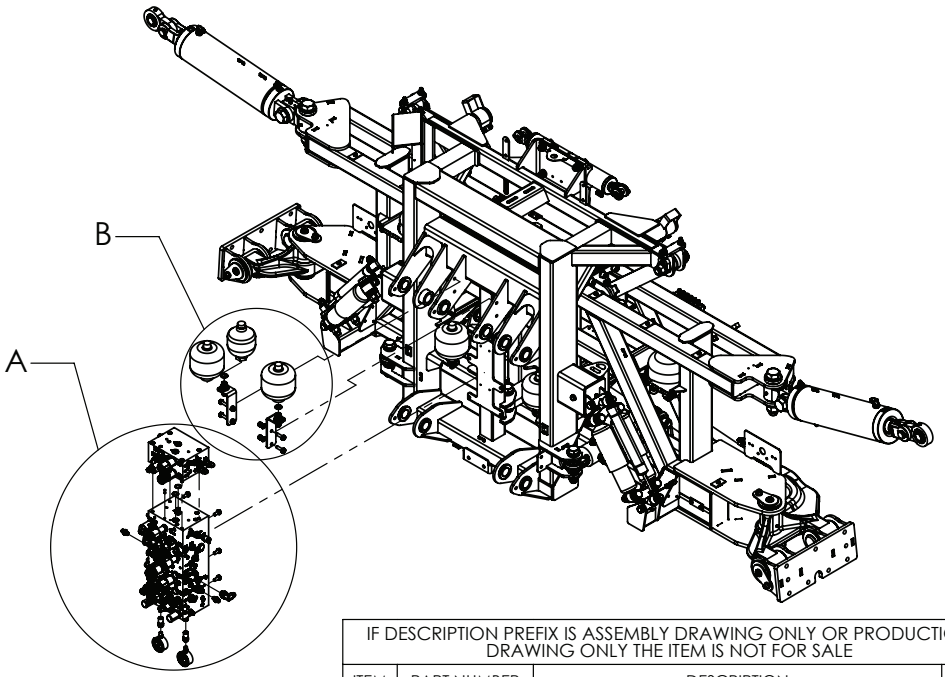

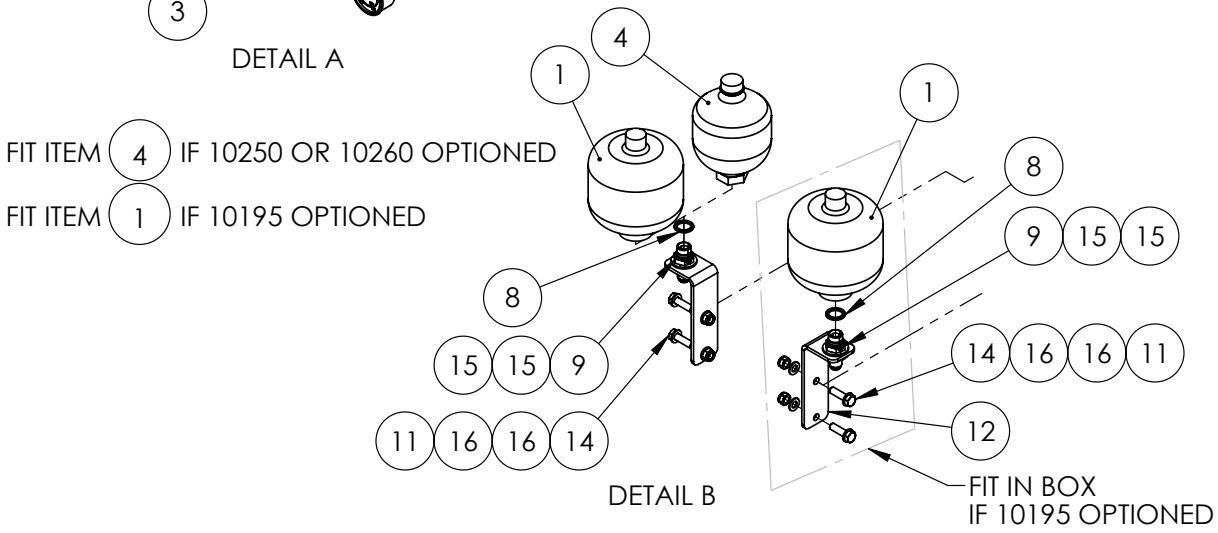

IF DESCRIPTION PREFIX IS ASSEMBLY DRAWING ONLY OR PRODUCTION DRAWING ONLY THE ITEM IS NOT FOR SALE			
ITEM	PART NUMBER	DESCRIPTION	QTY
1	GA5007787	ACCUMULATOR 1.0L PRECHARGE 70 BAR	2
2	GA5077350	ADAPTOR, DIRECT GAUGE, M16 X 2.0 FEMALE X 1/4" BSPP FEMALE	2
3	GA5078076	GAUGE, PRESSURE, 250 BAR, 3500PSI	2
4	GA3501087	HYDRAULIC ACCUMULATOR, 0.6L, 90 BAR PRECHARGE, HYDAC	1
5	GA3500544	HYDRAULIC ADAPTOR NIPPLE, 1/4" BSP O-RING X 9/16" JIC, S74-0409	2
6	GA3501839	HYDRAULIC MANIFOLD, BOOM 48, LFSP S3, MY25	1
7	GA3501838	HYDRAULIC MANIFOLD, BOOM, LFSP S3, MY25	1
8	GA3500159	HYDRAULIC SEAL, BONDED, 1/2", RL21D-08	2
9	GA3500717	HYDRAULIC ADAPTOR, BULKHEAD NIPPLE, 1/2" BSPP MALE X 3/4" JIC MALE, S130P-0812	2
10	GA3500722	HYDRAULIC ADAPTOR, ELBOW, 90 DEGREE, 3/4" JIC MALE X 1/2" BSPP MALE O-RING, S76-0812	1
11	GA5000141	NUT M10 NYLOC ZP	4
12	GA4411685	PLATE, ACCUMULATOR MOUNT, 48M BOOM	2
13	GA5006161	SET SCREW M10 X 25 GR8.8 ZP	6
14	GA5006111	SET SCREW M10 X 35 GR8.8 ZP	4
15	GA5001741	WASHER 20mm FLAT SS HD	4
16	GA5000117	WASHER M10 FLAT SS HD	14
GA6101940-09 GOLDACRES		ASSEMBLY DRAWING ONLY, CENTRE AND PARALIFT REAR, LF SP S3, MY25	REV 00

Boom Centre Level, Chain Assembly & Mounting Clamps

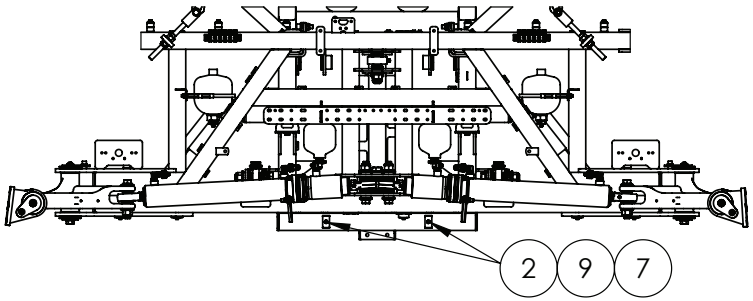

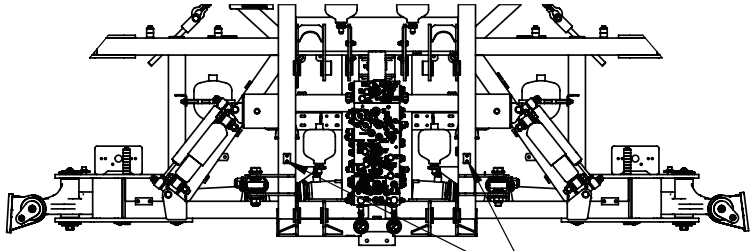

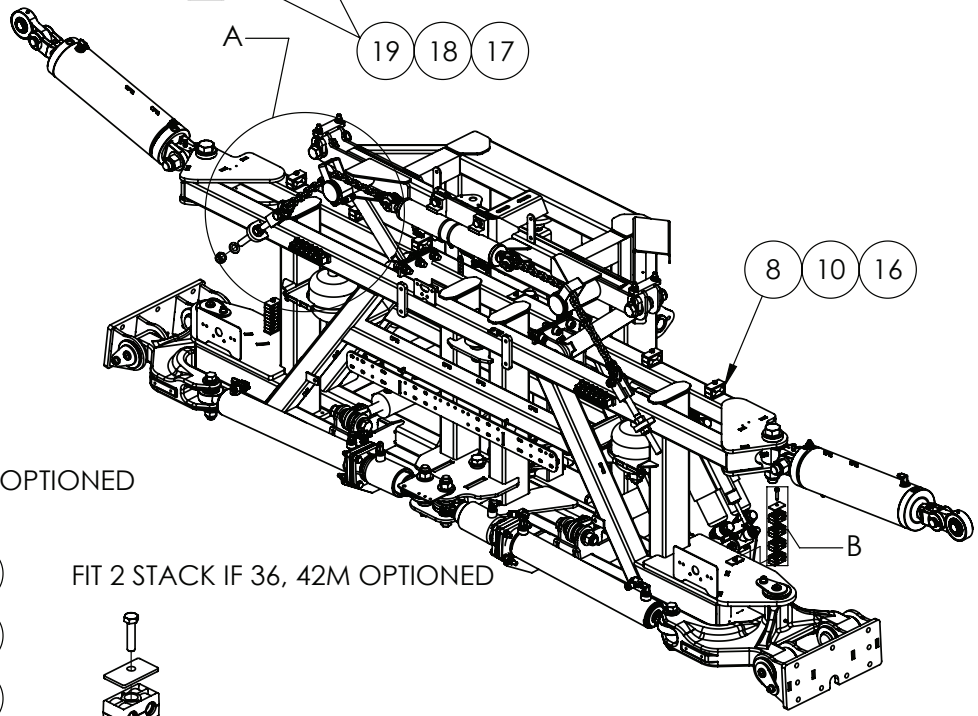

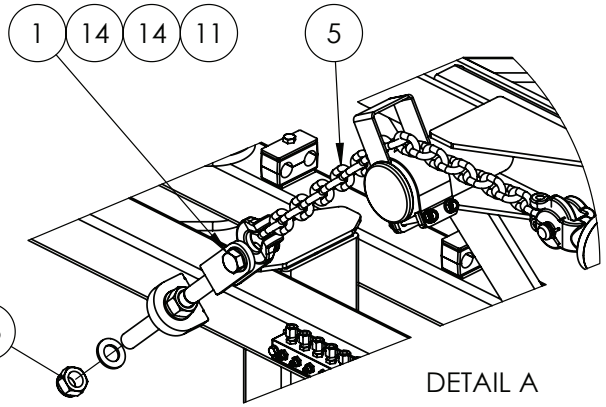

FIT 4 STACK IF 48M OPTIONED

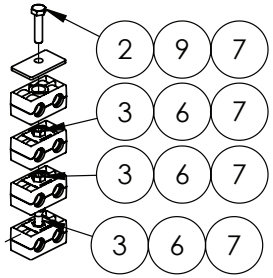

FIT 2 STACK IF 36, 42M OPTIONED

IF DESCRIPTION PREFIX IS ASSEMBLY DRAWING ONLY OR PRODUCTION DRAWING ONLY THE ITEM IS NOT FOR SALE			
ITEM	PART NUMBER	DESCRIPTION	QTY
1	GA5000941	BOLT M16 X 60 GR8.8 ZP	2
2	GA5011481	BOLT M8 X 35 GR8.8 ZP	4
3	GA5070740	BUILD UP BOLT, STACKING, M8 X 20 HYDAC	6
4	GA5020320	CABLE ADJUSTER 20mm THREADED	2
5	GA0500096	CHAIN ASSEMBLY, CENTRE LEVEL, 570mm EYE TO EYE, 8mm WITH EYELETS	2
6	GA5070760	LOCKING PLATE SUIT HYDAC CLAMPS, BUILD UP BOLT, STACKING	6
7	GA5026356	MOUNTING CLAMP, DOUBLE TYPE, JAW, PAIR, GROUP 2, 15mm, RCD-15J	10
8	GA5073795	MOUNTING CLAMP, DOUBLE TYPE, JAW, PAIR, GROUP 3, 19mm, BLACK, RCD-19J	6
9	GA5078042	MOUNTING CLAMP, DOUBLE TYPE, PLATE, TOP, GROUP 2, RCD-2PT	4
10	GA5078046	MOUNTING CLAMP, DOUBLE TYPE, PLATE, TOP, GROUP 3, RCD-3PT	6
11	GA5001029	NUT M16 NYLOC ZP	2
12	GA5001709	NUT M20 HEX ZP	2
13	GA5048125	NUT M20 NYLOC ZP	2
14	GA5001043	WASHER M16 FLAT SS HD	4
15	GA5001741	WASHER M20 FLAT SS HD	4
16	GA5048655	BOLT M8 X 40 GR8.8 ZP	6
17	GA5078058	MOUNTING CLAMP, SINGLE TYPE, JAW, PAIR, GROUP 3, 14mm, RCS-14J	4
18	GA5078068	MOUNTING CLAMP, SINGLE TYPE, PLATE, TOP, GROUP 2	2
19	GA5004081	BOLT M6 X 40 GR8.8 ZP	4
GA6101940-10 GOLDACRES		ASSEMBLY DRAWING ONLY, CENTRE AND PARALIFT REAR, LF SP S3, MY25	REV 00.A

Rate Control, Rear Camera & Working Light Mounting

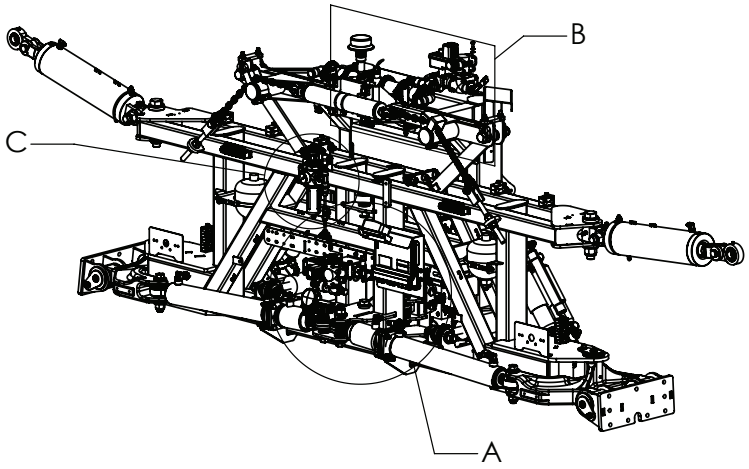

IF 10073 OPTIONED
FIT FUSE BLOCK HERE AND
ITEMS 19 24 23

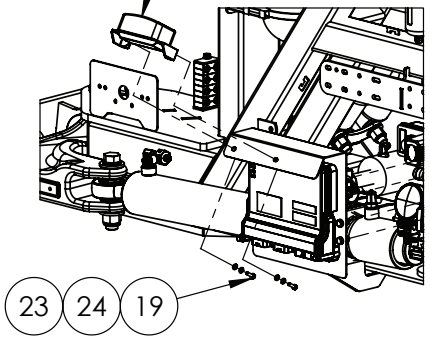

FIT ITEM 13
UNLESS 10073 OPTIONED
FIT ITEM 11

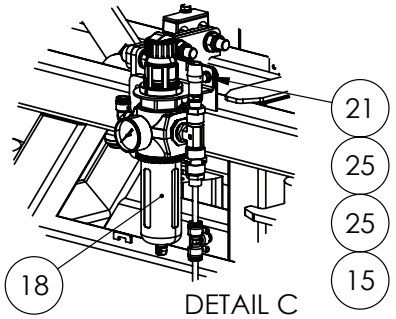

DETAIL C

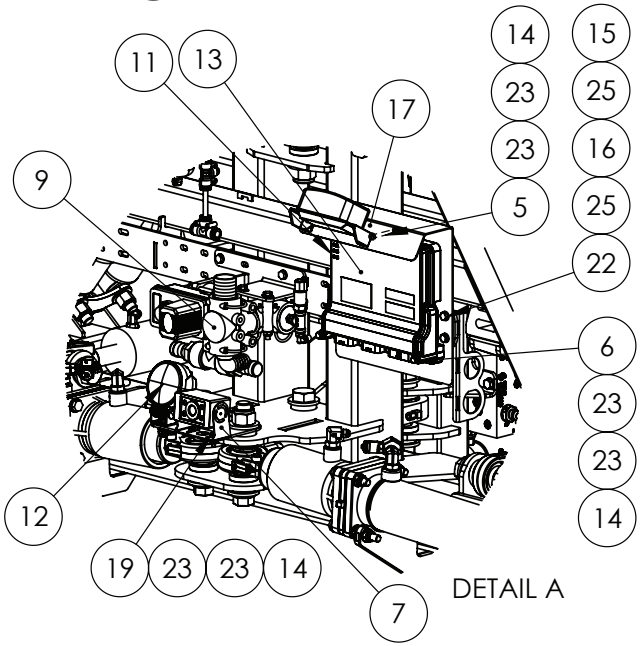

DETAIL A

FIT ITEM 8 20 25 26
IF 65217 OPTIONED

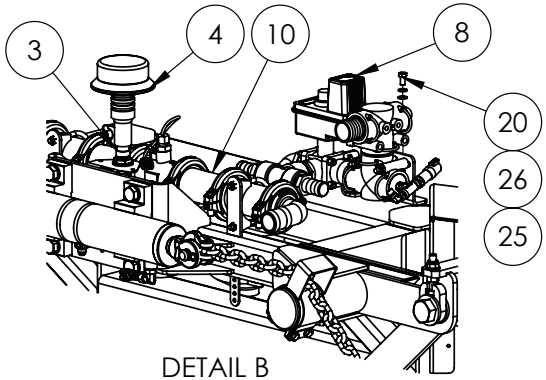

DETAIL B

IF DESCRIPTION PREFIX IS ASSEMBLY DRAWING ONLY OR PRODUCTION DRAWING ONLY THE ITEM IS NOT FOR SALE			
ITEM	PART NUMBER	DESCRIPTION	QTY
1	GA5026032	AIR FITTING, TEE 12X8X12MM TUBE, PUSH IN, PLASTIC, PISCO - PEG12-08	1
2	GA7000107	AIR FITTING, TEE 12mm" TUBE, PUSH IN, PLASTIC, PISCO - PE12	1
3	GA5020411	BEACON MOUNT SCREW ON	1
4	GA5048976	BEACON, LED, AMBER, DIN A POLE MOUNT, FLEXIBLE	1
5	GA5050175	BOLT M6 X 65 GR8.8 ZP	1
6	GA5011439	BOLT M6 X 80 GR8.8 ZP	2
7	GA3000910	CAMERA, REAR VIEW, 92 DEG CCD, WITH BRACKET, RKSCAM3	1
8	GA4909694	FLOW DISTRIBUTER AND BOOM RECIRCULATION VALVE ASSEMBLY, DUAL LINE, LF SP S3, MY25	1
9	GA4949455	FLOW DISTRIBUTER AND BOOM RECIRCULATION VALVE ASSEMBLY,G6, MY20	1
10	GA4949215	FLOW METER ASSEMBLY, LONG, RAVEN 60P HIGH PULSE WITH DEUTSCH CONNECTOR, 1 1/2" HOSE BARBS, SUIT RCM ISO BUS	1
11	GA3000510	ISO NODE, RCM, HAWKEYE 2 HD, GOLDACRES, RAVEN, 063-0173-956	1
12	GA3001335	LIGHT, LED, FLOOD, M70 S SERIES, 1850L, HELLA, 1G0 996 776-201	1
13	GA3000202	NODE, RCM, ISOBUS, RATE CONTROL MODULE, LEVEL 2 3TS UNLOCK, RAVEN, 063-0173-942	1
14	GA5048115	NUT M6 NYLOC ZP	5
15	GA5004917	NUT M8 NYLOC ZP	6
16	GA4000352	PLATE, BULKHEAD MOUNT, CENTRE, G6 S3	1
17	GA4404570	PLATE, MOUNT, RCM NODE	1
18	GA4954115	PRESSURE REGULATOR, HIGH FLOW, 380 MODEL, 12mm TUBE, LF S3	1
19	GA5004063	SET SCREW M6 X 20 SS A2-70	4
20	GA5011465	SET SCREW M8 X 16 GR8.8 ZP	2
21	GA5004085	SET SCREW M8 X 20 GR8.8 ZP	2
22	GA5004711	SET SCREW M8 X 25 GR8.8 ZP	4
23	GA5004437	WASHER M6 FLAT SS HD	12
24	GA5004447	WASHER M6 SPRING SS	2
25	GA5003643	WASHER M8 FLAT SS HD	14
26	GA5004919	WASHER M8 SPRING SS	2
GA6101940-11 GOLDACRES		ASSEMBLY DRAWING ONLY, CENTRE AND PARALIFT REAR, LF SP S3, MY25	REV 01

Air Pressure Regulator

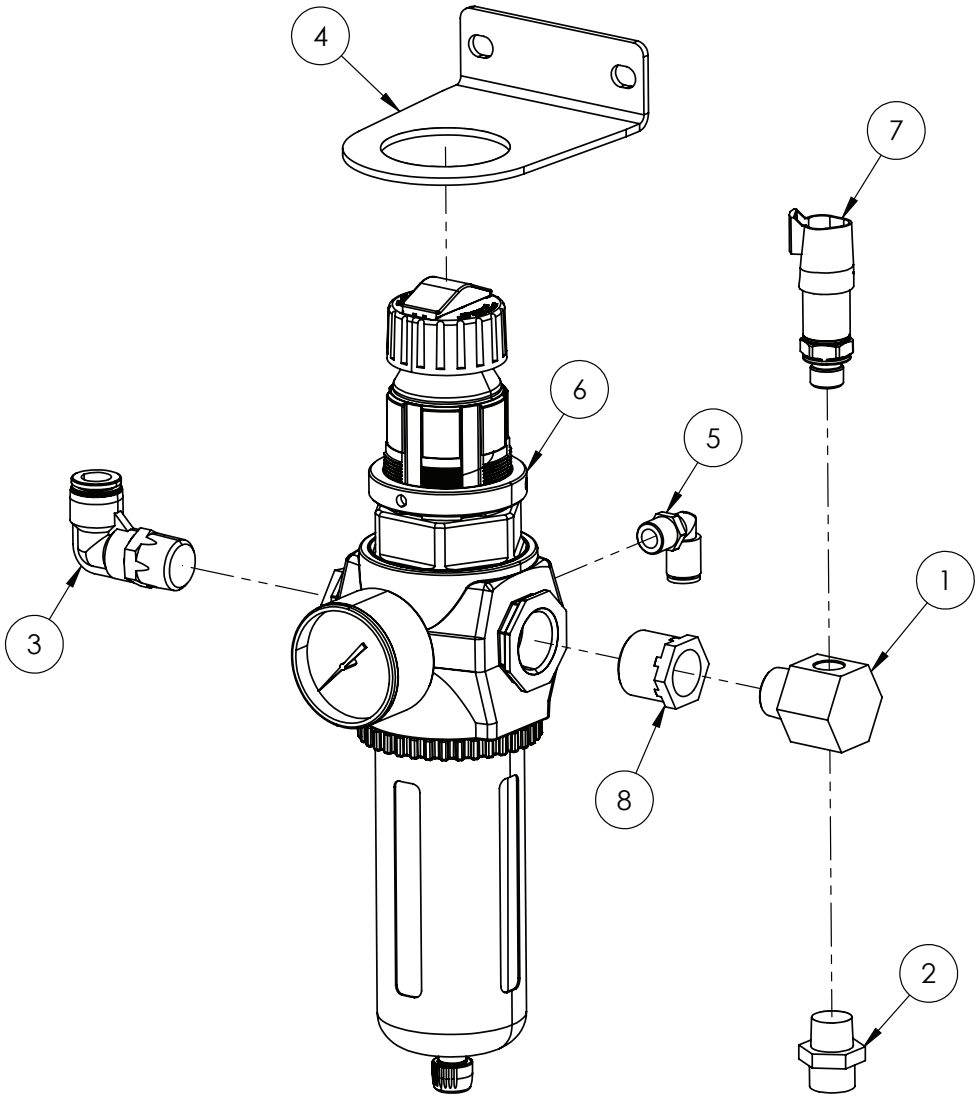

IF DESCRIPTION PREFIX IS ASSEMBLY DRAWING ONLY OR PRODUCTION DRAWING ONLY THE ITEM IS NOT FOR SALE			
ITEM	PART NUMBER	DESCRIPTION	QTY
1	GA5026567	ADAPTOR FITTING, TEE, 3/4" NPT MALE X 1/4" BSPP FEMALE X 3/8" BSPT FEMALE, BRASS	1
2	GA5079011	AIR FITTING, STRAIGHT, 12mm" TUBE, 3/8" MALE, PUSH IN, BRASS, ALKON - MAQ68-DOT-12X6	1
3	GA5079004	AIR FITTING, ELBOW 12mm" TUBE, 1/2", PUSH IN, PLASTIC, PISCO - PL12-04	1
4	GA4415835	PLATE, REGULATOR MOUNT, CFDRR380, LARGE FRAME SP	1
5	GA5052690	PNEUMATIC FITTING, ELBOW, 90 DEGREE, 1/4 BSP MALE X 8mm PUSH TYPE, METAL	1
6	GA7000096	PRESSURE REGULATOR, HIGH FLOW, WITH GAUGE, SELF RELIFING 380 MODEL, CFDR380-6GPW	1
7	GA3000316	PRESSURE SENSOR TRANSDUCER, 0-25 BAR, 0.5-4.5V, IFM	1
8	GA5026097	REDUCER BUSH, 3/4" NPT MALE X 1/2" NPT FEMALE	2
GA4954115 GOLDACRES		PRESSURE REGULATOR, HIGH FLOW, 380 MODEL, 12mm TUBE, LF S3	REV 01

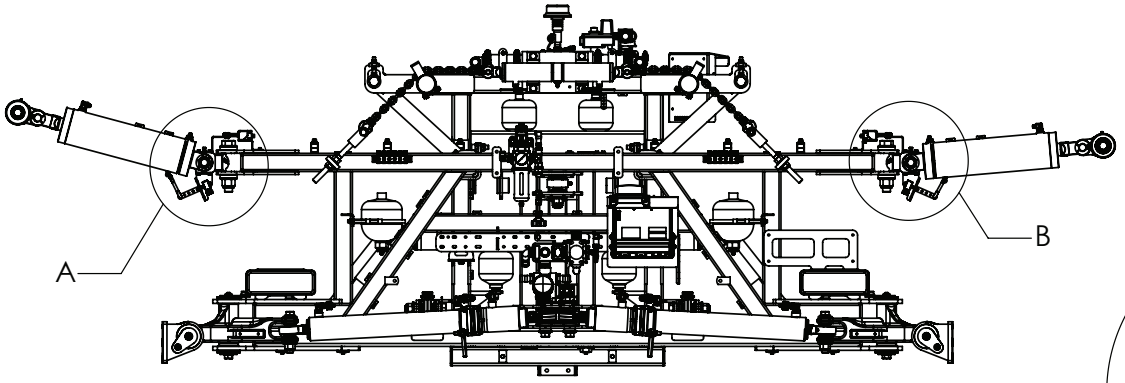

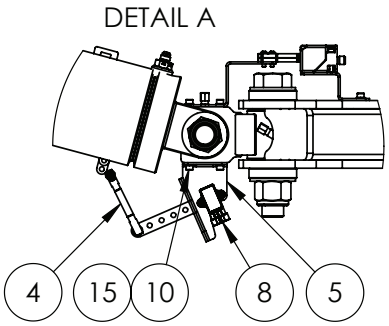

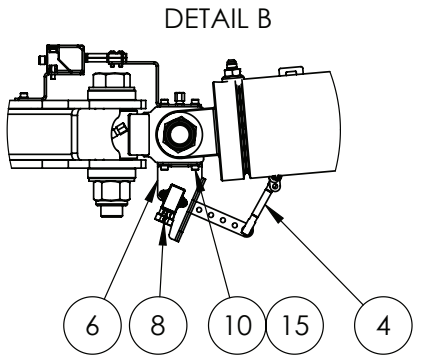

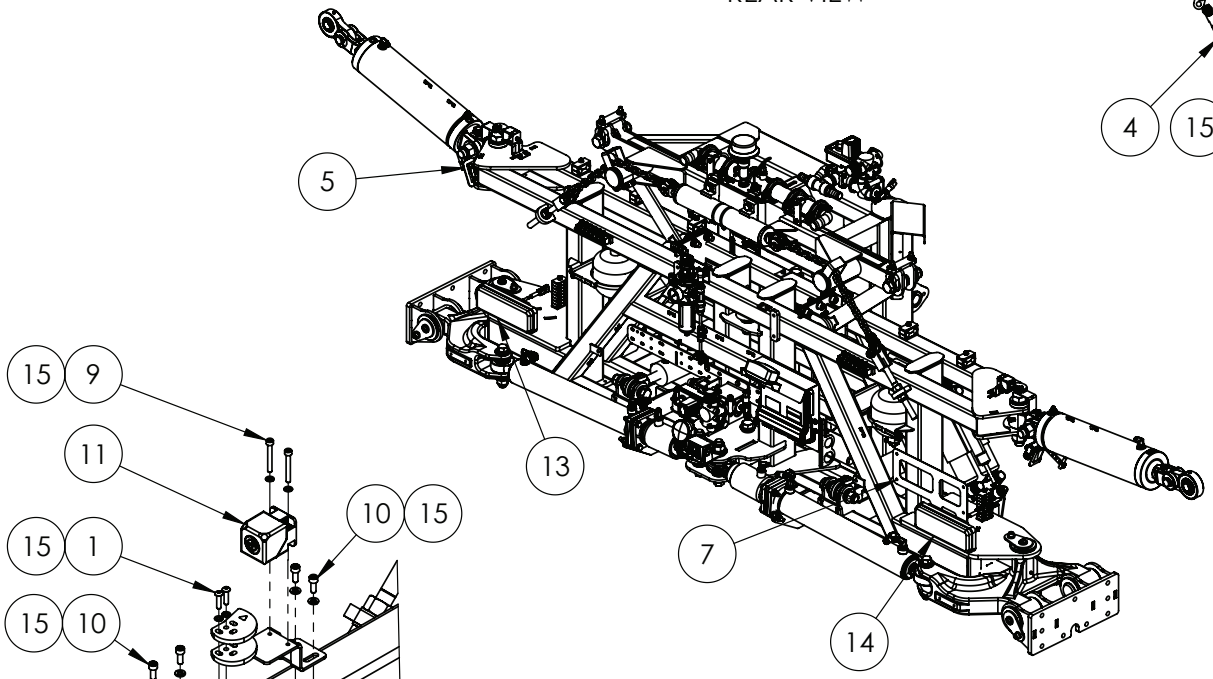

IF DESCRIPTION PREFIX IS ASSEMBLY DRAWING ONLY OR PRODUCTION DRAWING ONLY THE ITEM IS NOT FOR SALE			
ITEM	PART NUMBER	DESCRIPTION	QTY
1	GA0500004	BHCS M5 X 20 SS A2-70	4
2	GA4000266	FOLD SENSOR LINK ARM, S3	2
3	GA4000265	FOLD SENSOR MOUNT, CENTER SECTION, S3	2
4	GA4551275	LINK ROD, RIDE HEIGHT, G6, MY20	2
5	GA4408380	PLATE, TILT SENSOR, KNUCKLE SENSOR MOUNT LH, TRITECH, MY20	1
6	GA4408395	PLATE, TILT SENSOR, KNUCKLE SENSOR MOUNT RH, TRITECH, MY20	1
7	GA4504300	PLATE, NUMBER PLATE MOUNT, BOLT ON, SUIT TAIL LIGHT, SP 2011 ON	1
8	GA3000378	ROTARY SENSOR KIT, WITH LOOSE HARDWARE, RTP, 50 DEGREE, RAVEN XRT, 11170235009	2
9	GA5003595	SHCS M5 X 30 GR12.9 ZP	4
10	GA5048480	SHCS M6 X 16 SS A2-70	12
11	GA3001176	SENSOR, INDUCTIVE ANALOGUE, 1-26mm, M12, IFM IM5141	2
12	GA4000267	SNAIL CAM, SUIT FOLD SENSOR, S3	4
13	GA3001122	TAIL LIGHT, LED, LHS, COMBINATION WITH SEQUENTIAL INDICATOR, WITH DEUTSCH CONNECTOR	1
14	GA3001123	TAIL LIGHT, LED, RHS, COMBINATION WITH SEQUENTIAL INDICATOR, WITH DEUTSCH CONNECTOR	1
15	GA5004437	WASHER M6 FLAT SS HD	20
GA6101940-12 GOLDACRES		ASSEMBLY DRAWING ONLY, CENTRE AND PARALIFT REAR, LF SP S3, MY25	REV 00.A

Lower Limit Switch Assembly

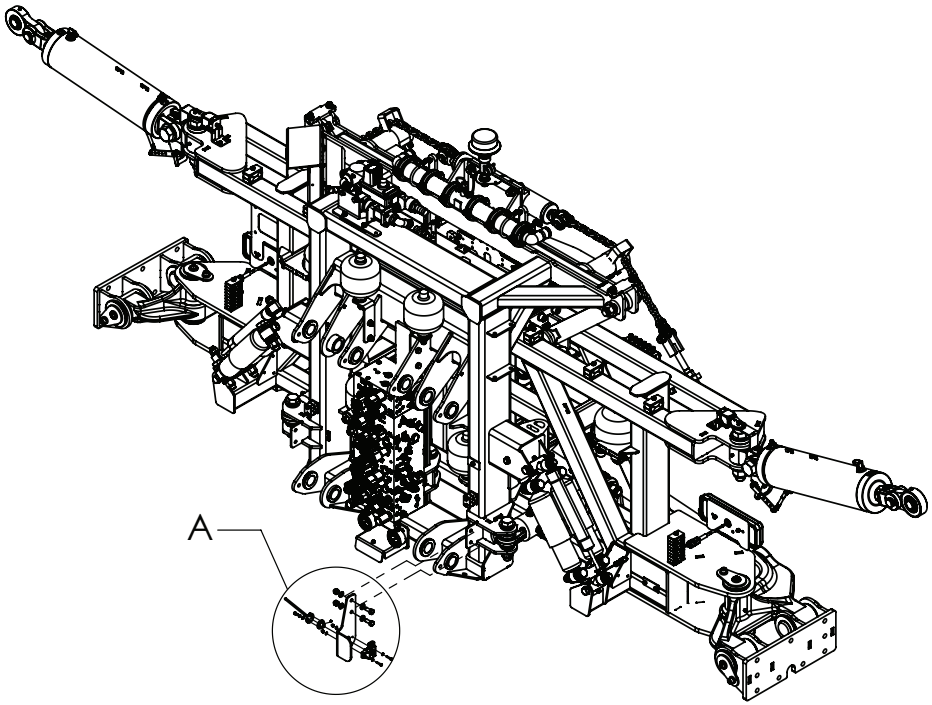

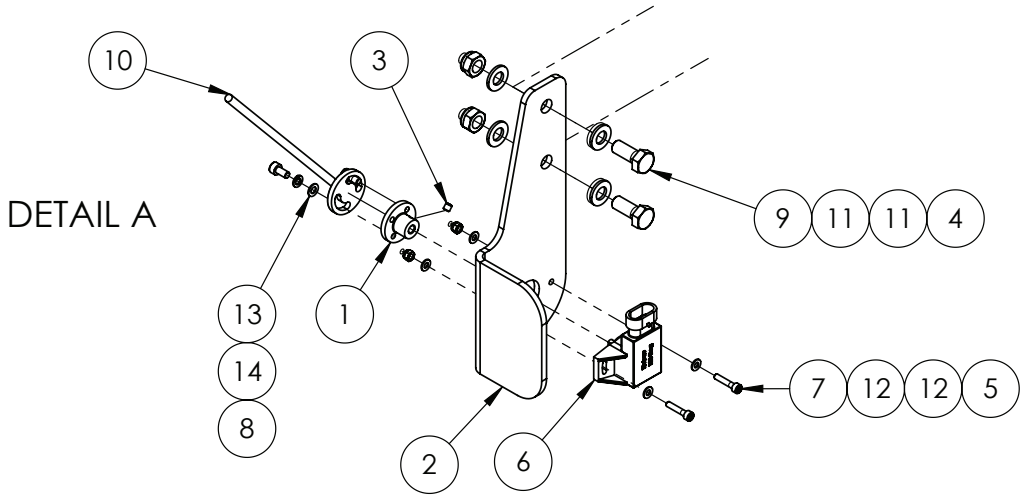

IF DESCRIPTION PREFIX IS ASSEMBLY DRAWING ONLY OR PRODUCTION DRAWING ONLY THE ITEM IS NOT FOR SALE			
ITEM	PART NUMBER	DESCRIPTION	QTY
1	GA4552855	BUSH, TILT SENSOR SWITCH, SP 2011	1
2	GA4537180	LIFT HEIGHT SENSOR BRACKET LYKKETRONIC	1
3	GA5069970	M5 GRUB SCREW X 5mm LONG S/S	1
4	GA5000141	NUT M10 NYLOC ZP	2
5	GA5003501	NUT M4 NYLOC ZP	2
6	GA5069457	POTENTIOMETER, 120 DEGREE, ELOBAU, GATMC	1
7	GA5069375	SHCS M4 X 20 SS A2-70	2
8	GA5069975	SHCS M5 X 10 SS A2-70	2
9	GA5006161	SET SCREW M10 X 25 GR8.8 ZP	2
10	GA4659191	TILT SENSOR ARM-PARA LIFT ARMS SP 2011	1
11	GA5000117	WASHER M10 FLAT SS HD	4
12	GA5020510	WASHER M4 FLAT SS	4
13	GA5003983	WASHER M5 FLAT SS	2
14	GA5003629	WASHER M5 SPRING SS	2
GA6101940-14 GOLDACRES		ASSEMBLY DRAWING ONLY, CENTRE AND PARALIFT REAR, LF SP S3, MY25	REV 00.A

Warning Decals, Boom Centre

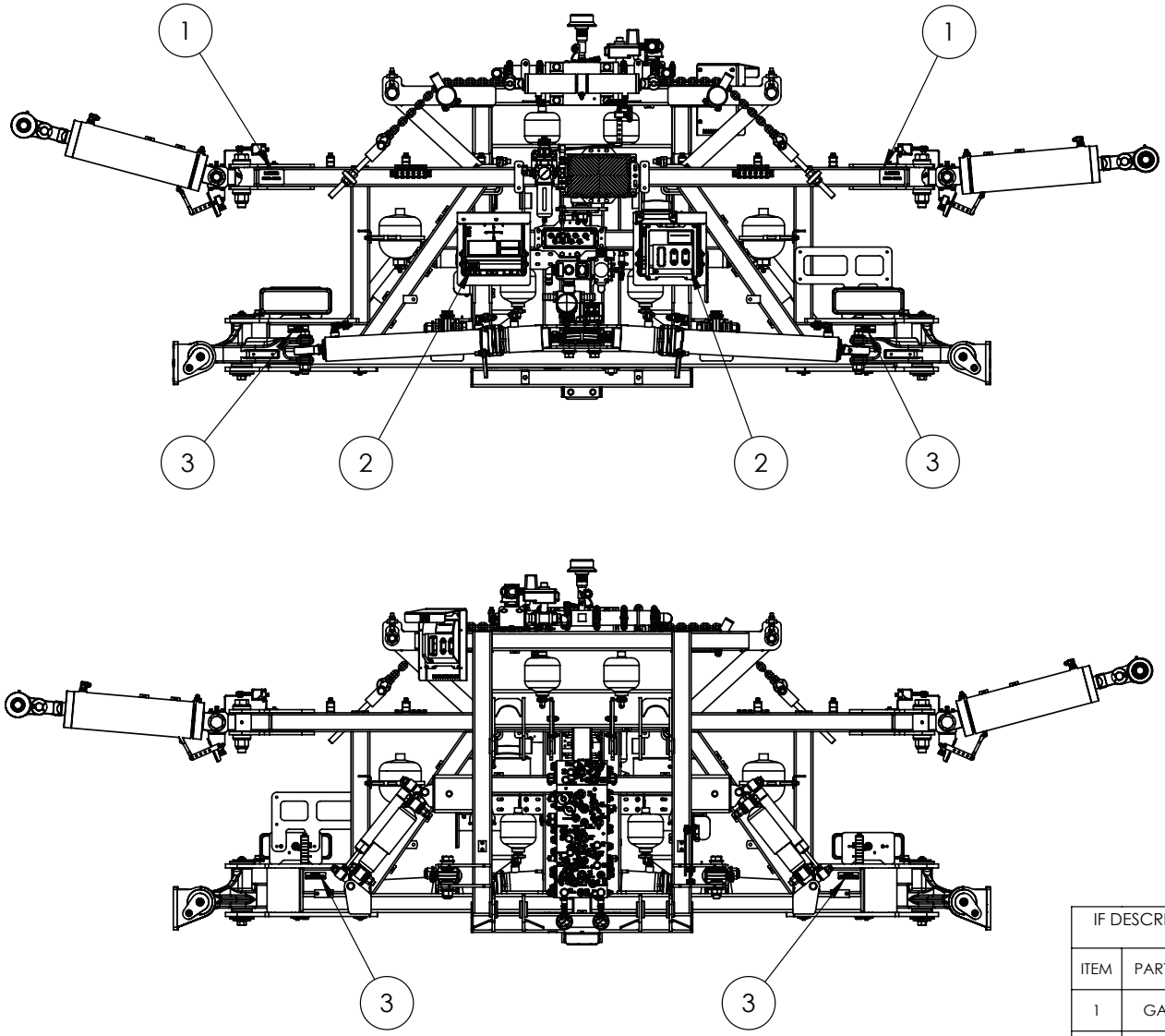

IF DESCRIPTION PREFIX IS ASSEMBLY DRAWING ONLY OR PRODUCTION DRAWING ONLY THE ITEM IS NOT FOR SALE			
ITEM	PART NUMBER	DESCRIPTION	QTY
1	GA8701209	DECAL, DANGER - STAND CLEAR	2
2	GA8701275	DECAL, WARNING - DO NOT PRESSURE WASH ELECTRICAL CONNECTIONS	2
3	GA8701128	DECAL, WARNING KEEP HANDS CLEAR	4
GA6101940-15 GOLDACRES		ASSEMBLY DRAWING ONLY, CENTRE AND PARALIFT REAR, LF SP S3, MY25	REV 00

Boom Mounting, Tilt Arm & Boom Hinge

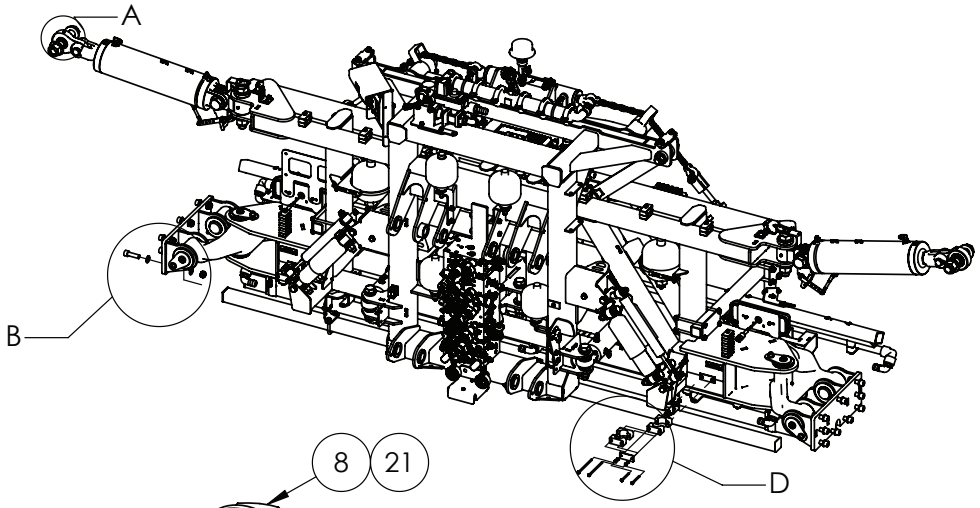

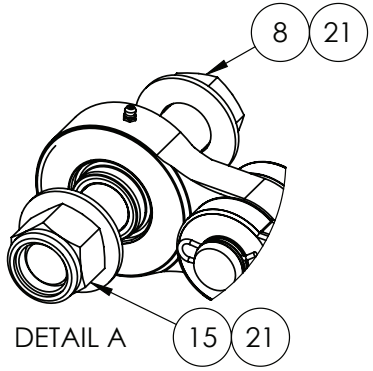

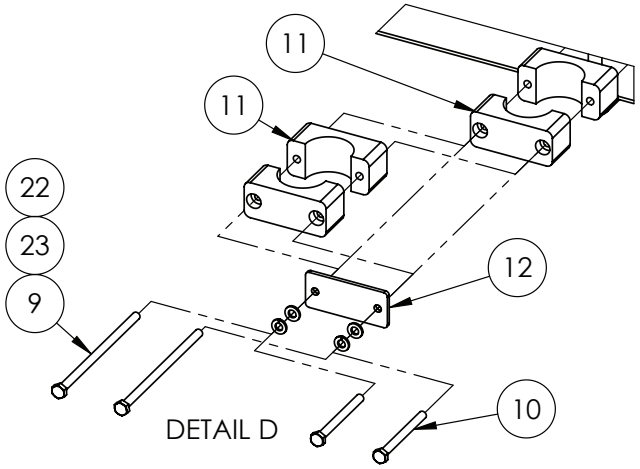

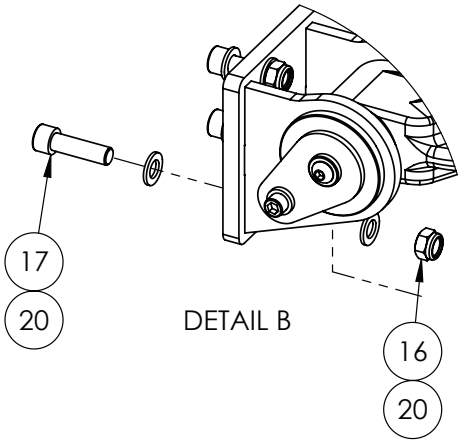

FIT ITEM (10) (11) (12) (11) (12)
IF 65215 OR 65216 OPTIONED
FIT ITEM (9) (11) (11) (12) (11) (12)
IF 65217 OPTIONED

IF DESCRIPTION PREFIX IS ASSEMBLY DRAWING ONLY OR PRODUCTION DRAWING ONLY THE ITEM IS NOT FOR SALE			
ITEM	PART NUMBER	DESCRIPTION	QTY
1	GA7000108	AIR FITTING, TEE 12mm X 12mm X 6mm TUBE, PUSH IN, PLASTIC, PISCO - PEG12-6	1
2	GA4909647	ASSEMBLY DRAWING ONLY, MECHANICAL / PNEUMATIC SWITCH, OPTRONIA	1
3	GA4909647	ASSEMBLY DRAWING ONLY, MECHANICAL / PNEUMATIC SWITCH, OPTRONIA	1
4	GA4909598	ASSEMBLY DRAWING ONLY, MOUNTING PLATE ASSEMBLY, CR2050 SERIES IFM I/O MODULE	1
5	GA4909569	ASSEMBLY DRAWING ONLY, CAMERA & POLY CENTRE MOUNT, OPTRONIA	1
6	GA5004023	BHCS M6 X 10 SS A2-70	2
7	GA0500102	BHCS M8 X 20 SS A2-70	4
8	GA0500074	BOLT 1 1/4" UNC X 7" GR8 ZP	2
9	GA5011389	BOLT M6 X 120 GR8.8 ZP	4
10	GA5050175	BOLT M6 X 65 GR8.8 ZP	4
11	GA5078070	MOUNTING CLAMP, SINGLE TYPE, JAW, PAIR, GROUP 5, 38mm, RCS-38J	4
12	GA5078075	MOUNTING CLAMP, SINGLE TYPE, PLATE, TOP, GROUP 5, RCS-5PT	2
13	GA5077962	NOZZLE BODY, SINGLE, 1", TEEJET, QJ17560A-1-NYB	22
14	GA5018259	NOZZLE BRACKET, PLASTIC, U SHAPE	6
15	GA0500071	NUT 1 1/4" NYLOC UNC ZP	2
16	GA5001029	NUT M16 NYLOC ZP	18
17	GA5003687	SHCS M16 X 55 GR 12.9 ZP	18
18	GA5066965	SPACER SUIT NOZZLE BRACKETS	6
19	GA5016245	TEE, EQUAL, 6mm PUSH IN TYPE, BLACK PLASTIC	1
20	GA5001043	WASHER M16 FLAT SS HD	36
21	GA0500072	WASHER M30 OR 1 1/4" X 2 5/8" FLAT ZP	4
22	GA5004437	WASHER M6 FLAT SS HD	6
23	GA5004447	WASHER M6 SPRING SS	4
24	GA5003643	WASHER M8 FLAT SS HD	4
GA6101940-16 GOLDACRES		ASSEMBLY DRAWING ONLY, CENTRE AND PARALIFT REAR, LF SP S3, MY25	REV 00.A

Spray Bar Mounting, Boom Centre, RIVX

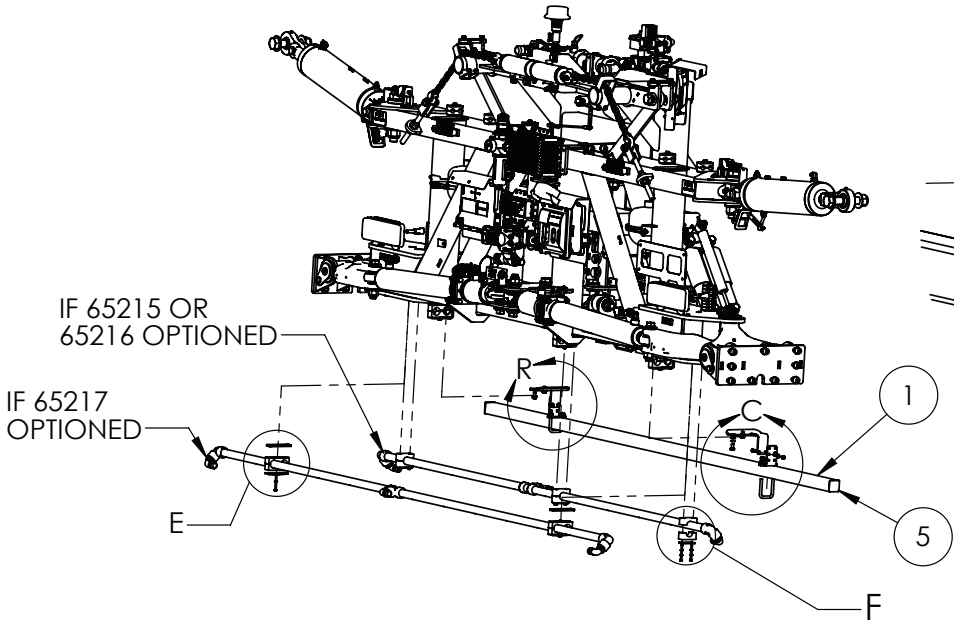

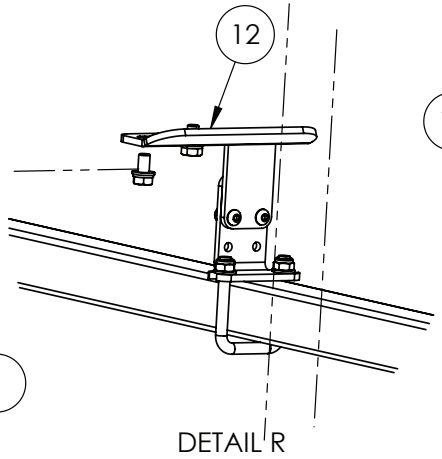

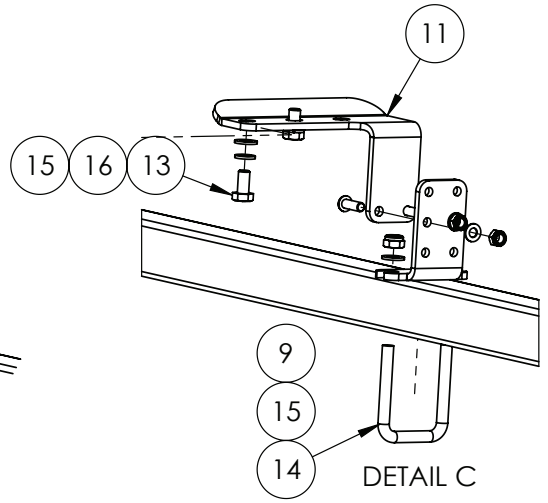

FIT ITEM 10 6 4 17 3
IF 65217 OPTIONED

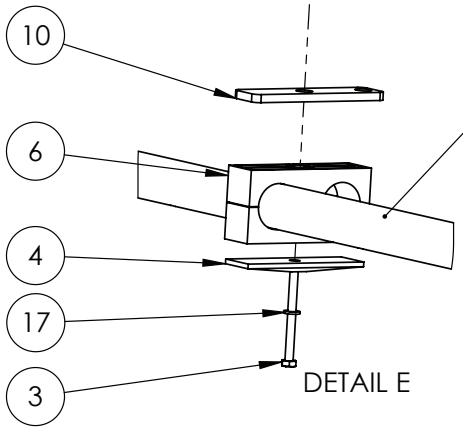

FIT ITEM 7 8 17 18 2
IF 65215 OR 65216 OPTIONED

POLY PIPE SHOWN
FOR REF ONLY -
CHECK BUILD SHEET
FOR OPTIONS

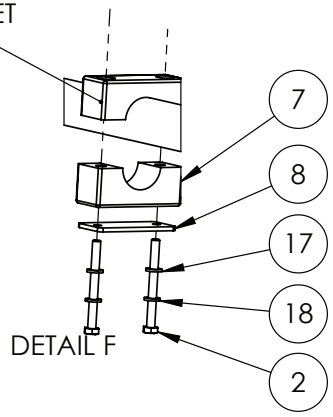

IF DESCRIPTION PREFIX IS ASSEMBLY DRAWING ONLY OR PRODUCTION DRAWING ONLY THE ITEM IS NOT FOR SALE			
ITEM	PART NUMBER	DESCRIPTION	QTY.
1	GA5072175	ALUMINIUM SQUARE HOLLOW EXTRUSION, 50 X 50 X 3, RADIUS EDGE, RHS, 6351 T5, 7M	2.75
2	GA5050175	BOLT M6 X 65 GR8.8 ZP	10
3	GA5004107	BOLT M6 X 70 GR8.8 ZP	5
4	GA5025540	COVER PLATE, RCD-33.7	5
5	GA5024720	END CAP, PLASTIC, BLACK, INSERT, RHS. 50 X 50, 2.4 - 4.0mm WALL	2
6	GA5025535	JAW CLAMPS, PAIR, RCD-33.7	5
7	GA3500699	MOUNTING CLAMP, SINGLE TYPE, JAW, PAIR, GROUP 5, 33.7mm, RCS-33.5J	5
8	GA5078075	MOUNTING CLAMP, SINGLE TYPE, PLATE, TOP, GROUP 5, RCS-5PT	5
9	GA5051445	NUT M10 NYLOC SS	4
10	GA4000498	PLATE, CENTER, DUAL LINE, MOUNTING CLAMP PACKER	5
11	GA4909478	PRODUCTION DRAWING ONLY, NOZZLE GUARD MOUNTING, RIVX BOOM, CENTRE SECTION, LHS	1
12	GA4909477	PRODUCTION DRAWING ONLY, NOZZLE GUARD MOUNTING, RIVX BOOM, CENTRE SECTION, RHS	1
13	GA5006113	SET SCREW M10 X 20 GR8.8 ZP	4
14	GA5053645	U BOLT SQUARE TOP M10 X 52 X 75	2
15	GA5000117	WASHER M10 FLAT SS HD	8
16	GA5000137	WASHER M10 SPRING SS	4
17	GA5004437	WASHER M6 FLAT SS HD	15
18	GA5004447	WASHER M6 SPRING SS	10
GA6101940-16 GOLDACRES		ASSEMBLY DRAWING ONLY, CENTRE AND PARALIFT REAR, LF SP S3, MY25	REV 00.A

Nozzle Guard, Bracket Assembly, Centre, LH

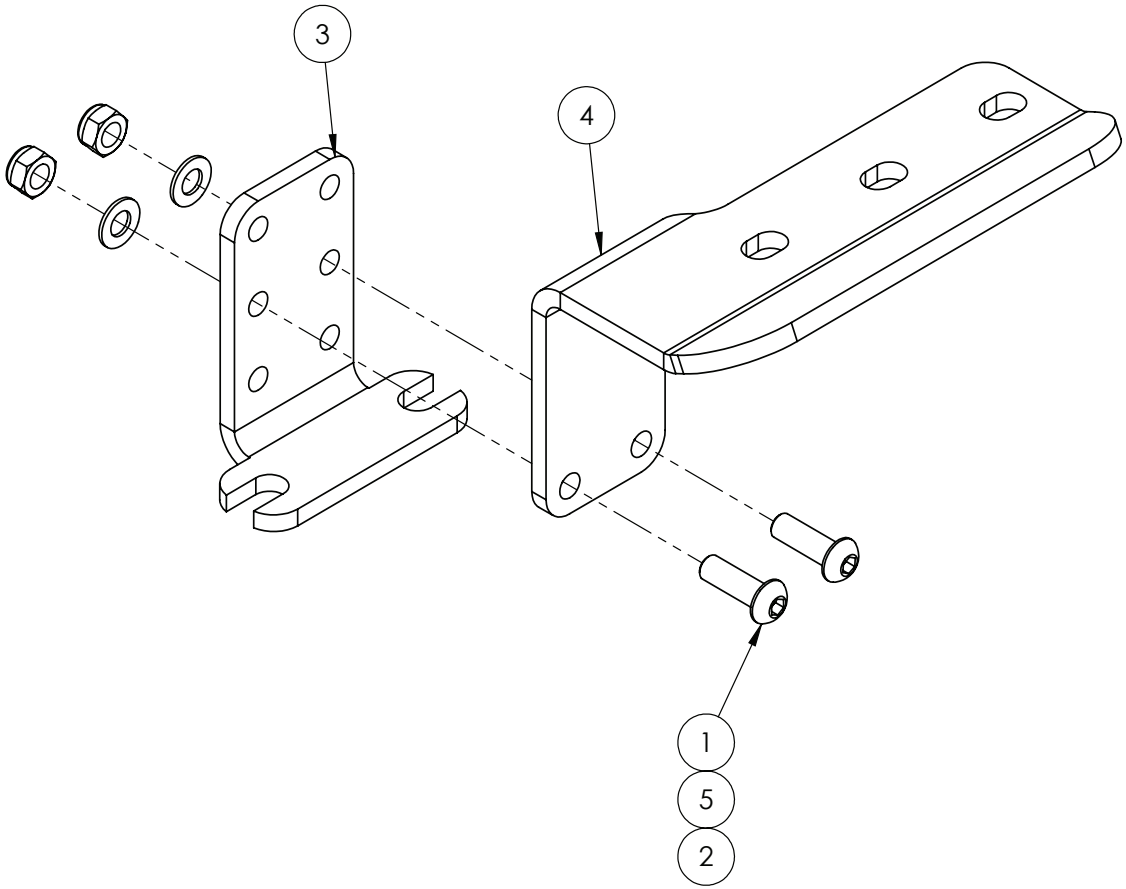

IF DESCRIPTION PREFIX IS ASSEMBLY DRAWING ONLY OR PRODUCTION DRAWING ONLY THE ITEM IS NOT FOR SALE			
ITEM	PART NUMBER	DESCRIPTION	QTY
1	GA5011473	BHCS M8 X 25 SS A2-70	2
2	GA5052590	NUT M8 NYLOC SS	2
3	GA4415535	PLATE, BOOM NUDGE BAR MOUNT, ADJUSTIBLE, LOWER, CENTRE SECTION, TRITECH	1
4	GA4000126	PLATE, NUDGE BAR MOUNT, CENTRE SECTION, RHS, RIVX	1
5	GA5003651	WASHER M8 FLAT SS	2
GA4909478 GOLDACRES		PRODUCTION DRAWING ONLY, NOZZLE GUARD MOUNTING, RIVX BOOM, CENTRE SECTION, LHS	REV 00

Nozzle Guard, Bracket Assembly, Centre, RH

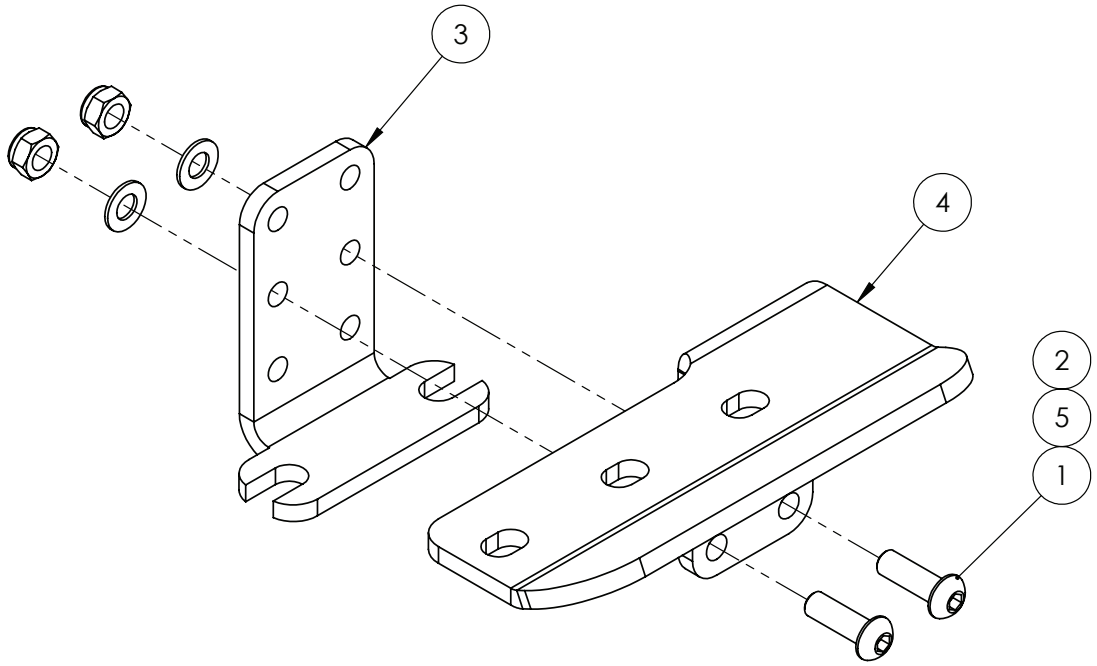

IF DESCRIPTION PREFIX IS ASSEMBLY DRAWING ONLY OR PRODUCTION DRAWING ONLY THE ITEM IS NOT FOR SALE			
ITEM	PART NUMBER	DESCRIPTION	QTY
1	GA5011473	BHCS M8 X 25 SS A2-70	2
2	GA5052590	NUT M8 NYLOC SS	2
3	GA4415535	PLATE, BOOM NUDGE BAR MOUNT, ADJUSTIBLE, LOWER, CENTRE SECTION, TRITECH	1
4	GA4000127	PLATE, NUDGE BAR MOUNT, CENTRE SECTION, LHS, RIVX	1
5	GA5003651	WASHER M8 FLAT SS	2
GA4909477 GOLDACRES		PRODUCTION DRAWING ONLY, NOZZLE GUARD MOUNTING, RIVX BOOM, CENTRE SECTION, RHS	REV 00.A

Spray Bar Mounting, Centre Section, 48mt

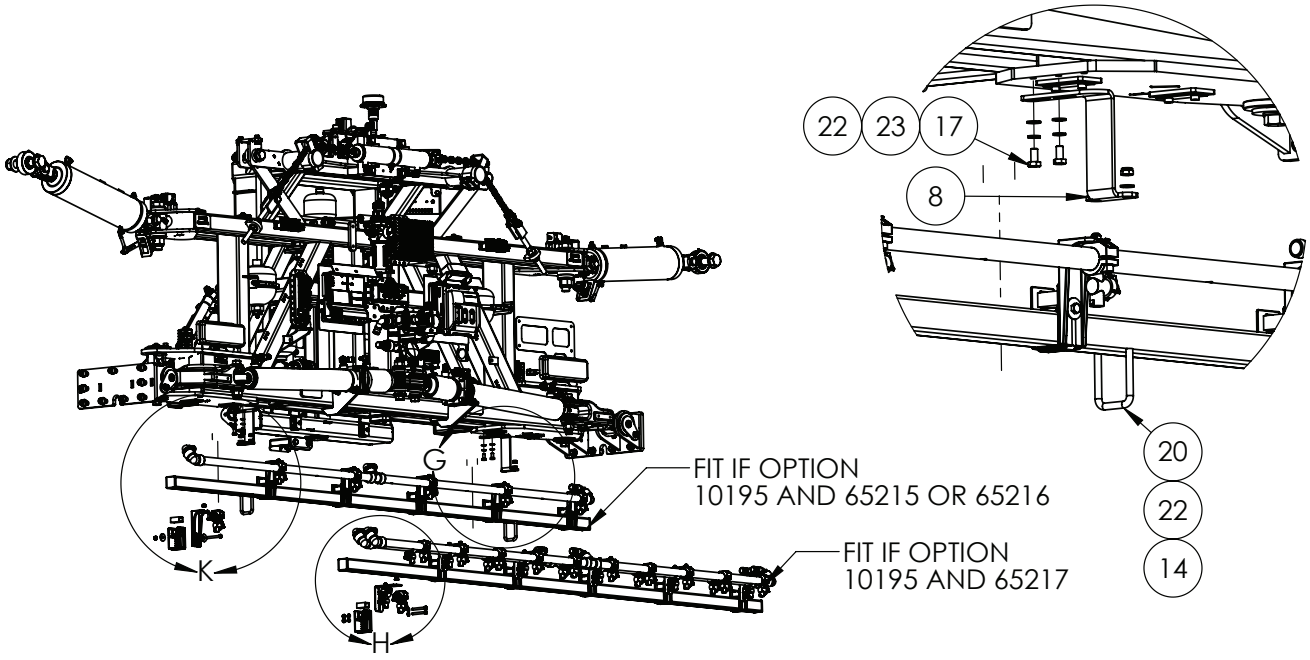

DETAIL G
FITTED WITH
OPTION 10195

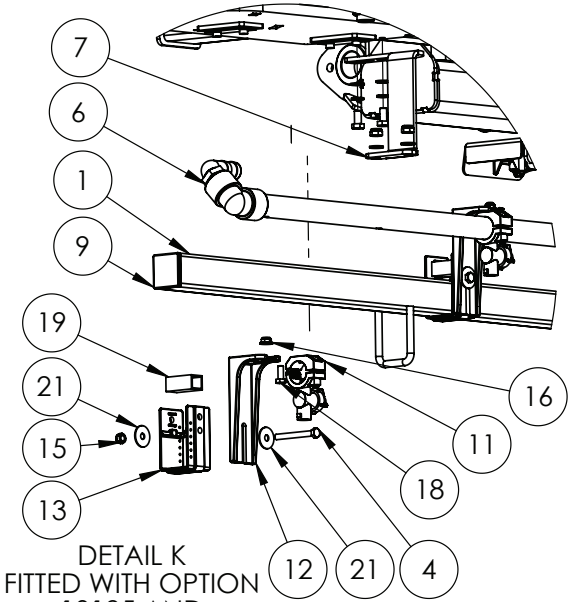

DETAIL K
FITTED WITH OPTION
10195 AND
65215 OR 65126

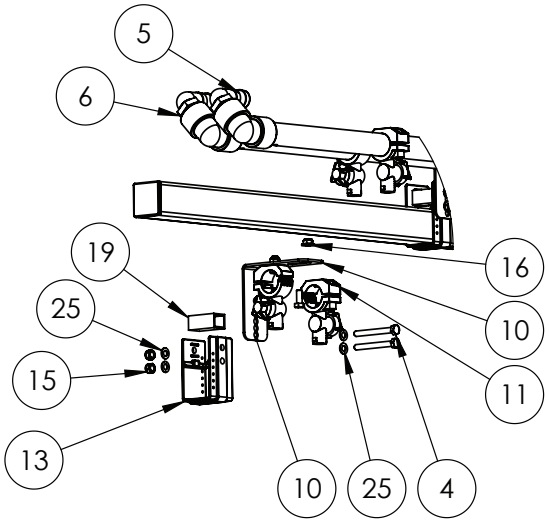

DETAIL H
FITTED WITH OPTION
10195
AND 65217

IF DESCRIPTION PREFIX IS ASSEMBLY DRAWING ONLY OR PRODUCTION DRAWING ONLY THE ITEM IS NOT FOR SALE			
ITEM	PART NUMBER	DESCRIPTION	QTY.
1	GA5072175	ALUMINIUM SQUARE HOLLOW EXTRUSION, 50 X 50 X 3, RADIUS EDGE, RHS, 6351 T5, 7M	2.75
2	GA4909598	ASSEMBLY DRAWING ONLY, MOUNTING PLATE ASSEMBLY, CR2050 SERIES IFM I/O MODULE	1
3	GA5004023	BHCS M6 X 10 SS A2-70	2
4	GA5052600	BOLT M8 X 75 SS A2-70	18
5	GA4909723	BOOM POLY ASSEMBLY, BARE, 48M, CENTRE SECTION, DUAL LINE, 250mm	1
6	GA4951715	BOOM POLY ASSEMBLY, BARE, 48M, CENTRE SECTION, 250mm	2
7	GA4407320	BRACKET, SPRAY BAR MOUNT A, TRITECH CENTRE SECTION, MY20	1
8	GA4407325	BRACKET, SPRAY BAR MOUNT B, TRITECH CENTRE SECTION, MY20	1
9	GA5024720	END CAP, PLASTIC, BLACK, INSERT, RHS. 50 X 50, 2.4 - 4.0mm WALL	2
10	GA4505515	NOZZLE BRACKET L LONG SS	6
11	GA5077962	NOZZLE BODY, SINGLE, 1", TEEJET, QJ17560A-1-NYB	23
12	GA5018258	NOZZLE BRACKET, PLASTIC, L SHAPE, LONG	6
13	GA5018259	NOZZLE BRACKET, PLASTIC, U SHAPE	12
14	GA5051445	NUT M10 NYLOC SS	4
15	GA5004917	NUT M8 NYLOC ZP	18
16	GA5070710	NUT WITH FLANGE, PLASTIC, M8 X 1.25	18
17	GA5006113	SET SCREW M10 X 20 GR8.8 ZP	4
18	GA5004085	SET SCREW M8 X 20 GR8.8 ZP	18
19	GA5066965	SPACER SUIT NOZZLE BRACKETS	12
20	GA5053645	U BOLT SQUARE TOP M10 X 52 X 75	2
21	GA5003645	WASHER 5/16" X 1 1/4" FLAT SS	12
22	GA5000117	WASHER M10 FLAT SS HD	8
23	GA5000137	WASHER M10 SPRING SS	4
24	GA5004437	WASHER M6 FLAT SS HD	2
25	GA5003651	WASHER M8 FLAT SS	24
GA6101940-16 GOLDACRES		ASSEMBLY DRAWING ONLY, CENTRE AND PARALIFT REAR, LF SP S3, MY25	REV 00.A

Centre Section, I/O Module Mounting

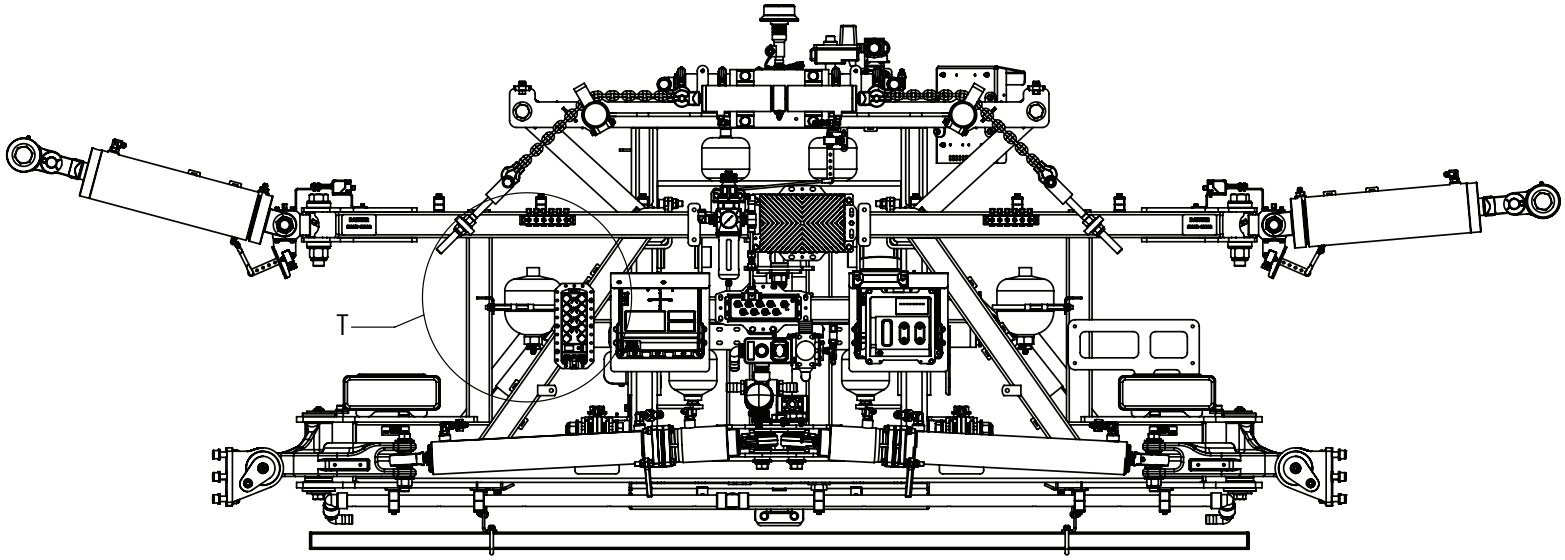

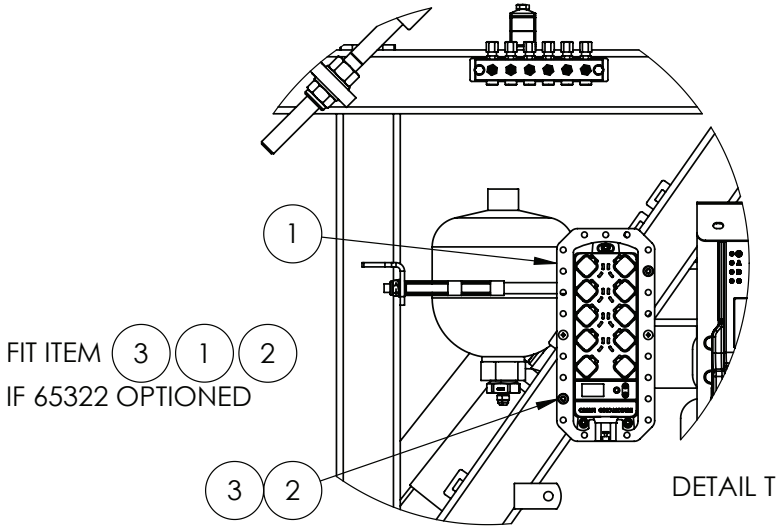

FIT ITEM 3 1 2
IF 65322 OPTIONED

DETAIL T

IF DESCRIPTION PREFIX IS ASSEMBLY DRAWING ONLY OR PRODUCTION DRAWING ONLY THE ITEM IS NOT FOR SALE			
ITEM	PART NUMBER	DESCRIPTION	QTY.
1	GA4909598	ASSEMBLY DRAWING ONLY, MOUNTING PLATE ASSEMBLY, CR2050 SERIES IFM I/O MODULE	1
2	GA5004023	BHCS M6 X 10 SS A2-70	2
3	GA5004437	WASHER M6 FLAT SS HD	2
GA6101940-16 GOLDACRES		ASSEMBLY DRAWING ONLY, CENTRE AND PARALIFT REAR, LF SP S3, MY25	REV 00.A

I/O Module Assembly

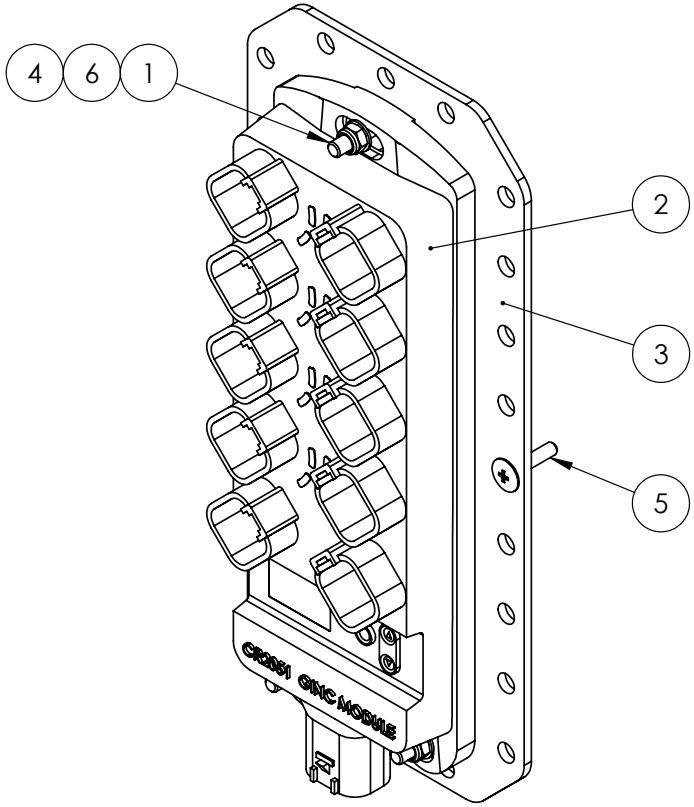

TUBULAR RIVETS SUPPLIED WITH IO MODULE
MAX TORQUE = 2 NM

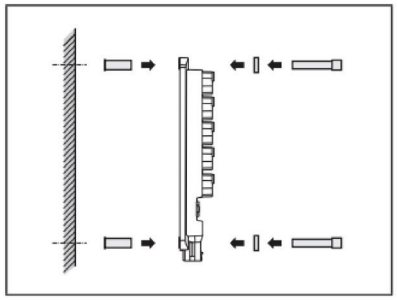

Use of the tubular rivets

Tightening torque: 2.0 Nm

IF DESCRIPTION PREFIX IS ASSEMBLY DRAWING ONLY OR PRODUCTION DRAWING ONLY THE ITEM IS NOT FOR SALE			
ITEM	PART NUMBER	DESCRIPTION	QTY
1	GA5050115	CSCS M5 X 25 SS A2-70	3
2	GA3001389	IO MODULE, 16 OUTPUT, SUIT GINC SYSTEM, IFM CR2051	1
3	GA4000546	MOUNTING PLATE, CR2050 SERIES IFM I/O MODULE	1
4	GA5003975	NUT M5 NYLOC SS	3
5	GA0500055	SCREW, SELF DRILLING, SELF TAPPING, 8G X 20mm, LARGE WAFER HEAD, PHILIPS, ZP	2
6	GA5003983	WASHER M5 FLAT SS	3
GA4909598 GOLDACRES		ASSEMBLY DRAWING ONLY, MOUNTING PLATE ASSEMBLY, CR2050 SERIES IFM I/O MODULE	REV 00

Manifold Cover, Boom Centre

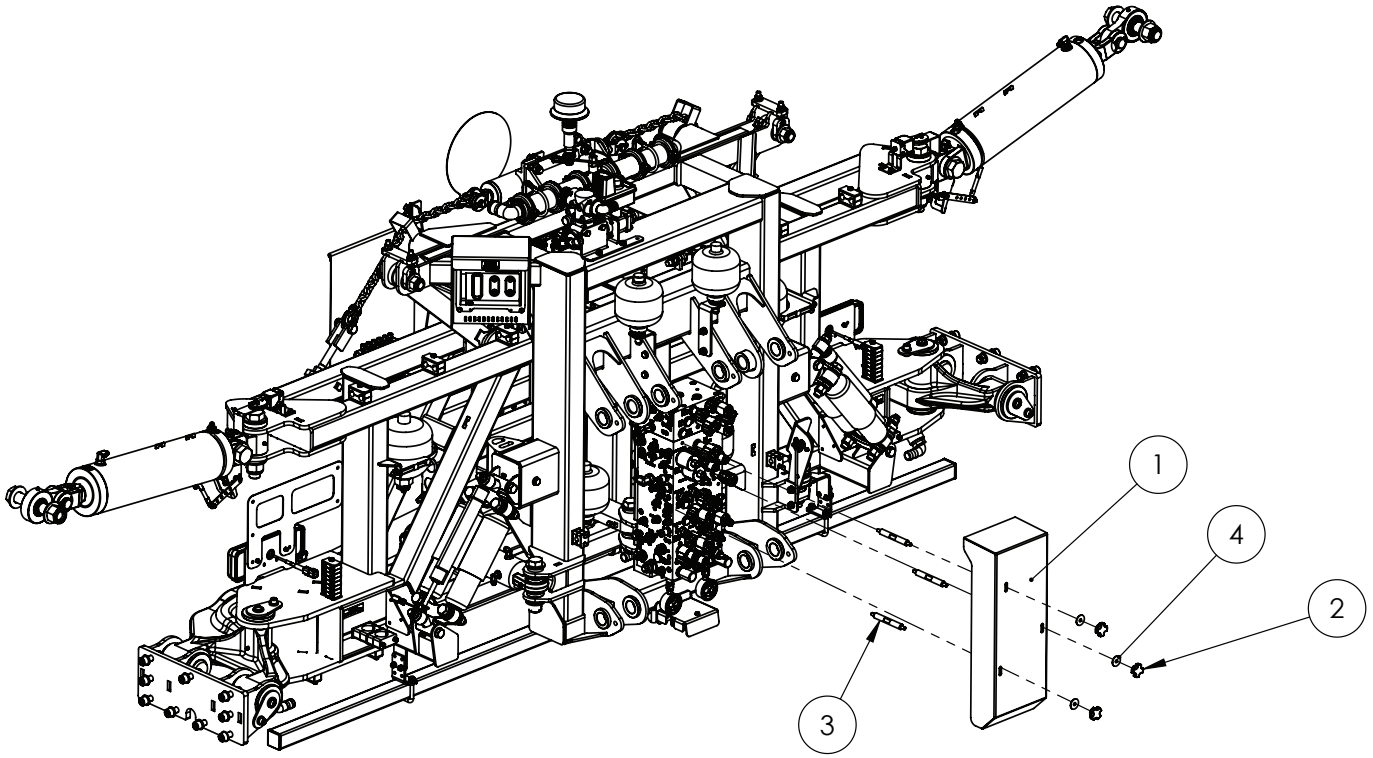

IF DESCRIPTION PREFIX IS ASSEMBLY DRAWING ONLY OR PRODUCTION DRAWING ONLY THE ITEM IS NOT FOR SALE			
ITEM	PART NUMBER	DESCRIPTION	QTY
1	GA4000205	COVER, CENTRE MANIFOLD COVER, LF SP S3, MY25	1
2	GA5069875	KNOB-STAR GRIP M8 X 40 DIA	3
3	GA4553245	SPACER ROD, CENTRE MANIFOLD COVER, LF SP S3	3
4	GA5003645	WASHER 5/16" X 1 1/4" FLAT SS	3
GA6101940-17 GOLDACRES		ASSEMBLY DRAWING ONLY, CENTRE AND PARALIFT REAR, LF SP S3, MY25	REV 00

Oversize Sign, Mounting

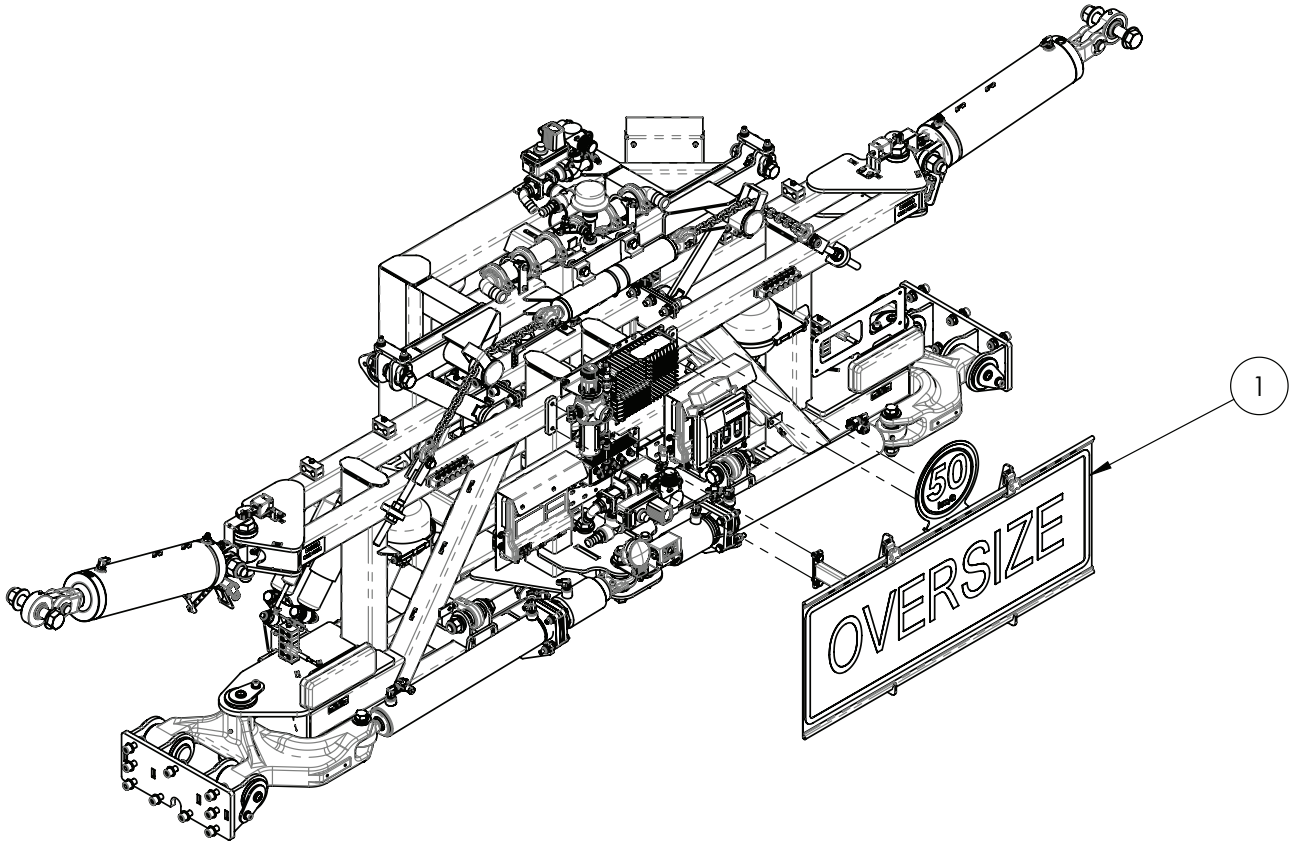

IF DESCRIPTION PREFIX IS ASSEMBLY DRAWING ONLY OR PRODUCTION DRAWING ONLY THE ITEM IS NOT FOR SALE			
ITEM	PART NUMBER	DESCRIPTION	QTY
1	GA4909510	PRODUCTION DRAWING ONLY, OVER SIZE SIGN, ASSEMBLY, RIVX	1
GA6101940-17 GOLDACRES		ASSEMBLY DRAWING ONLY, CENTRE AND PARALIFT REAR, LF SP S3, MY25	REV 00

Oversize Sign Assembly

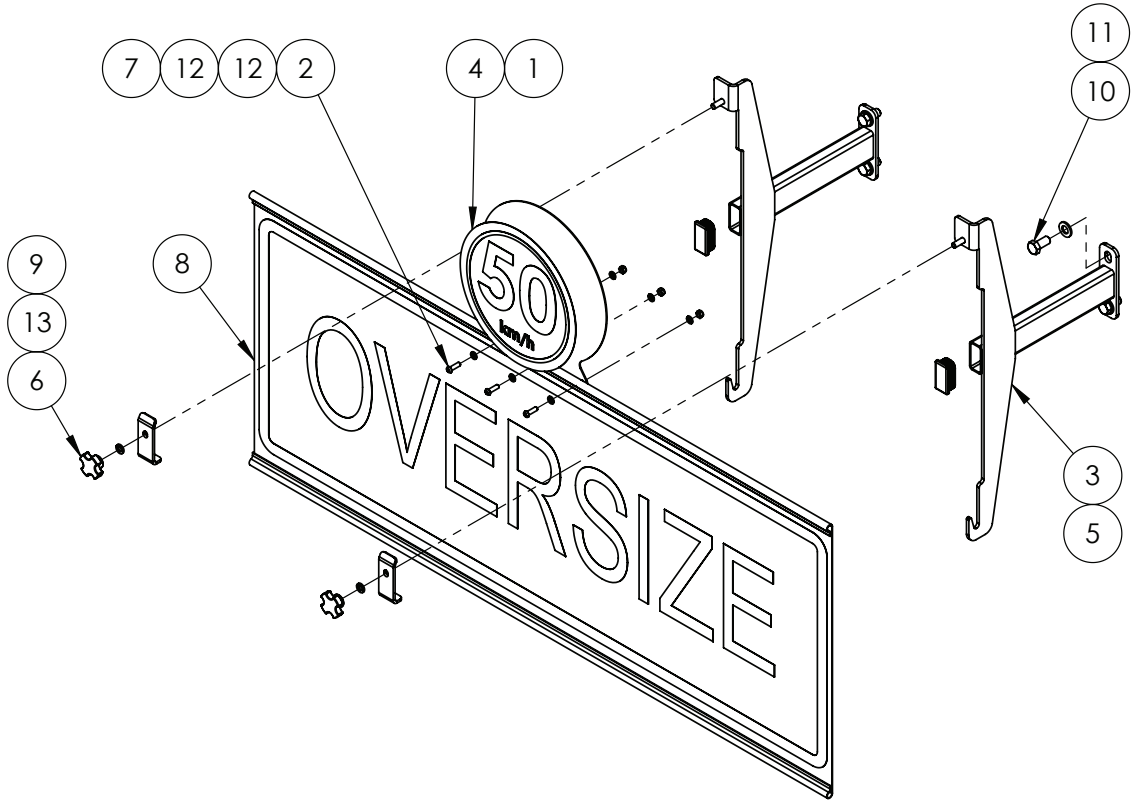

IF DESCRIPTION PREFIX IS ASSEMBLY DRAWING ONLY OR PRODUCTION DRAWING ONLY THE ITEM IS NOT FOR SALE			
ITEM	PART NUMBER	DESCRIPTION	QTY
1	F70906A	50km/H STICKER HOLDER PLATE 1.6mm SS	1
2	GA5004053	BHCS M6 X 20 SS A2-70	3
3	GA4605053	BRACKET, OVERSIZE SIGN MOUNT	2
4	GA5063830	DECAL, 50km/H	1
5	GA5003733	END CAP, 50X25 RHS	2
6	GA5069875	KNOB-STAR GRIP M8 X 40 DIA	2
7	GA5048115	NUT M6 NYLOC ZP	3
8	GA5009613	OVERSIZE SIGN, YELLOW, REFLECTIVE WITH FOLDED EDGES	1
9	GA4000255	PLATE, OVERSIZE SIGN CLAMP	2
10	GA5011229	SET SCREW M12 X 25 GR8.8 ZP	4
11	GA5000577	WASHER 12mm FLAT SS HD	4
12	GA5004437	WASHER 6mm FLAT SS	6
13	GA5004919	WASHER M8 SPRING SS	2
GA4909510 GOLDACRES		PRODUCTION DRAWING ONLY, OVER SIZE SIGN, ASSEMBLY, RIVX	REV 00

13 - Boom Wings

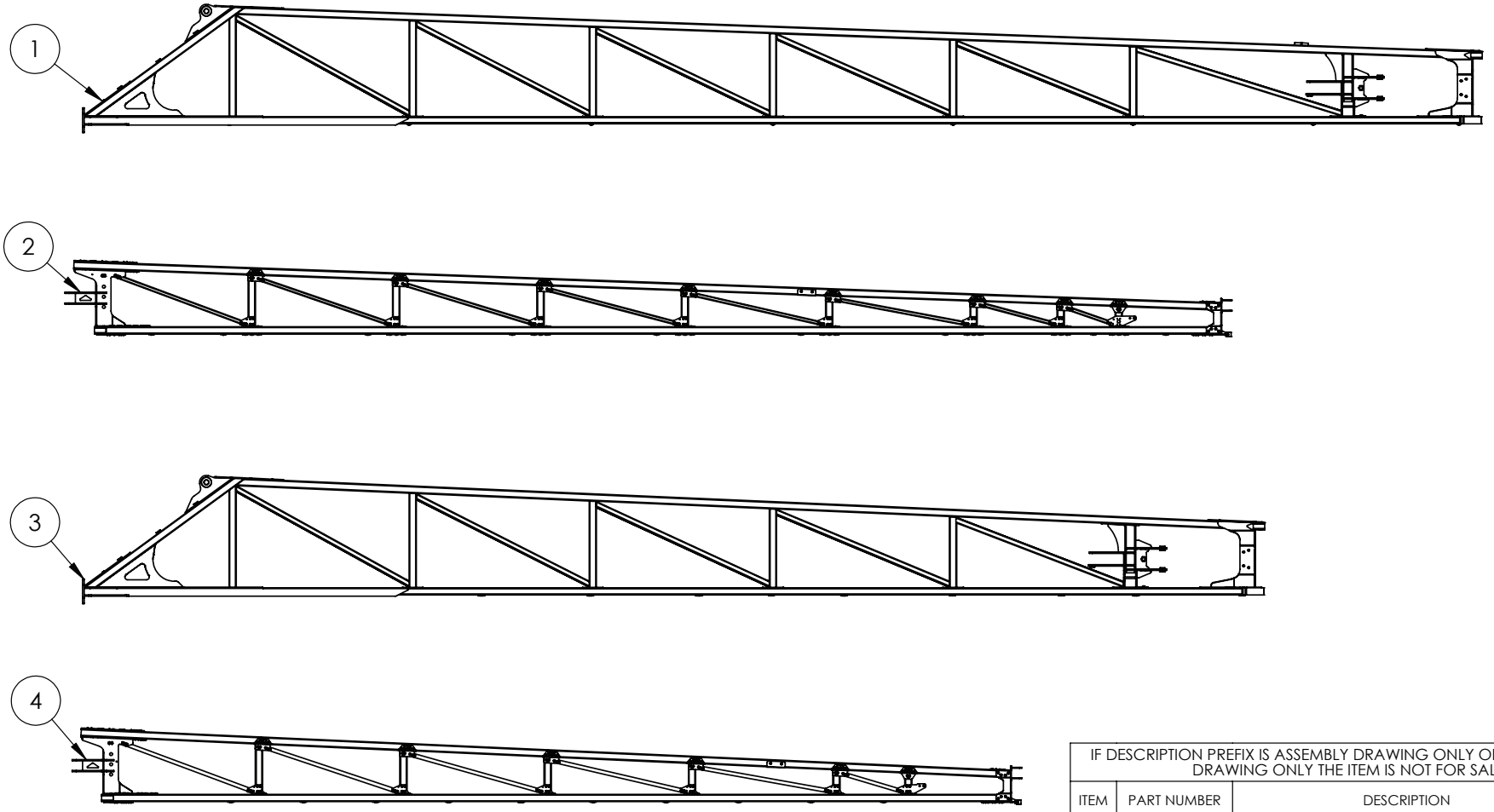

IF DESCRIPTION PREFIX IS ASSEMBLY DRAWING ONLY OR PRODUCTION DRAWING ONLY THE ITEM IS NOT FOR SALE			
ITEM	PART NUMBER	DESCRIPTION	QTY
1	GA4602170	BOOM WING, LH & RH INNER, 42M, TRITECH, MY20	1
2	GA4602165	OUTER BOOM, 42M, TRITECH, MY20	1
3	GA4605085	BOOM WING, LH & RH INNER, 33-36M, RIVX	1
4	GA4605077	OUTER BOOM, 36M, TRITECH RIVX	1
GA7800463 GOLDACRES		BOOM WINGS, 36M - 42M	REV

Breakaways, RIVX

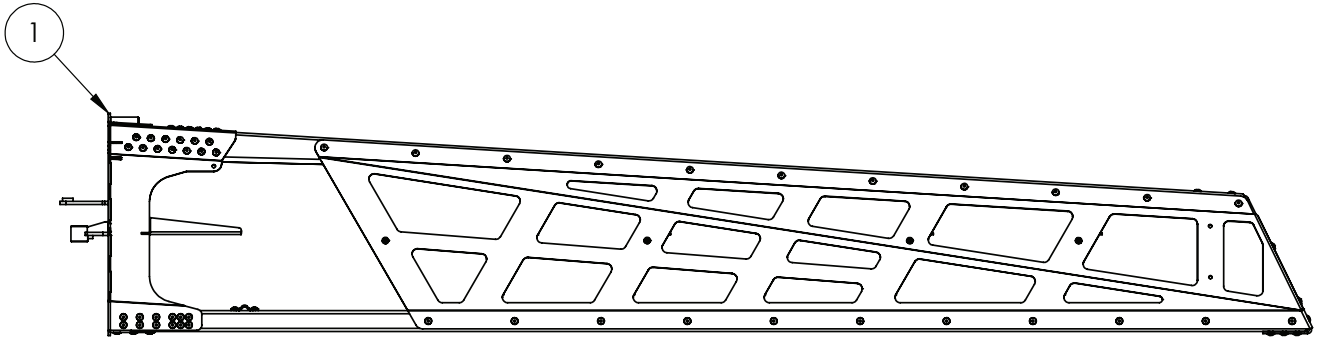

IF DESCRIPTION PREFIX IS ASSEMBLY DRAWING ONLY OR PRODUCTION DRAWING ONLY THE ITEM IS NOT FOR SALE			
ITEM	PART NUMBER	DESCRIPTION	QTY
1	GA4951560	BREAKAWAY TIP ASSEMBLY 2.3M, BARE, RIVX, MY22	1
GA7800494 GOLDACRES		BREAKAWAY TIPS, SERIES 3, RIVX	REV 00

Bi-Fold, LH, Linkage, Ram Mount Assembly, RIVX

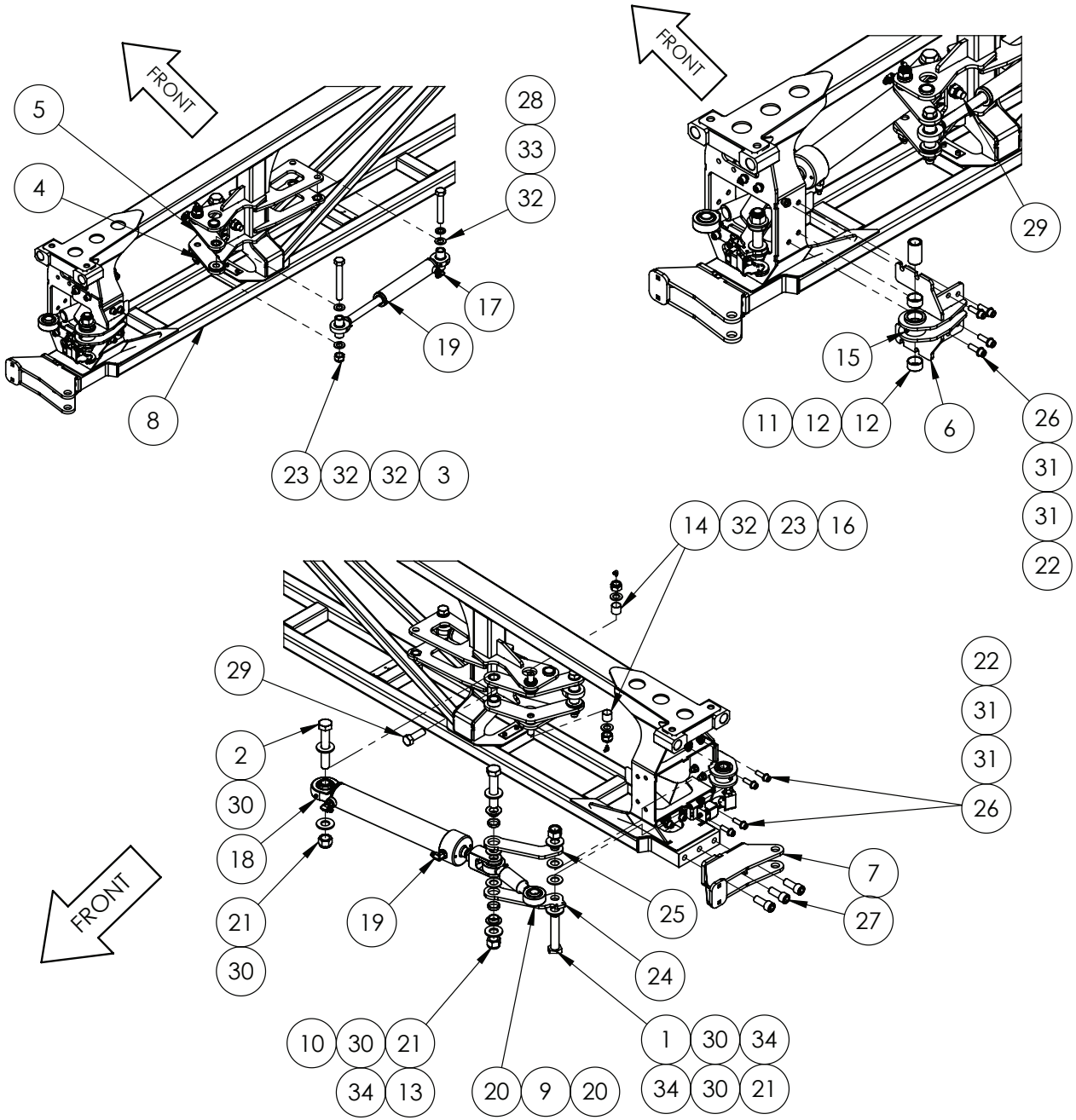

IF DESCRIPTION PREFIX IS ASSEMBLY DRAWING ONLY OR PRODUCTION DRAWING ONLY THE ITEM IS NOT FOR SALE			
ITEM	PART NUMBER	DESCRIPTION	QTY
1	GA5006031	BOLT 1" UNC X 5" GR8 ZP	2
2	GA5006033	BOLT 1" UNC X 6" GR8 ZP	1
3	GA5001531	BOLT M20 X 150 GR8.8 ZP	1
4	GA4602215	BOOM BI-FOLD BREAKAWAY LINK A, TRITECH MY20	1
5	GA4602220	BOOM BI-FOLD BREAKAWAY LINK B, TRITECH MY20	1
6	GA4602175	BOOM BI-FOLD LINKAGE MOUNT, TRITECH, MY20	1
7	GA4602140	BOOM HINGE MOUNT, BOLT ON, LOWER, TRITECH, MY19	1
8	GA4605085	BOOM WING, LH & RH INNER, 33-36M, RIVX	1
9	GA4551290	BUSH, BI-FOLD ADJUSTER LINK, 1 1/4"UNF X 90mm LONG, MY20 BOOM	1
10	GA4551535	BUSH, BOOM LINKAGE PIVOT, TRITECH S	2
11	GA4550210	BUSH, FOLD LINK BOOM END, TRITECH BOOM 2015	1
12	GA5055650	GLACIER BUSH, ID 35 X OD 39 X 20 LONG	2
13	GA5078612	GLACIER BUSH, 36mm OD X 32mm ID X 9mm LONG	2
14	GA5065487	GLACIER BUSH, 1" ID, 1.125" OD, 1" LONG	2
15	GA5012203	GREASE NIPPLE, SHORT, 1/4 UNF, MACH0207	1
16	GA5051970	GREASE NIPPLE, 6mm, 90 DEG	2
17	GA3500716	HYDRAULIC ADAPTOR ELBOW, 9/16" UNO TO 9/16" JIC, 90 DEG, S91-0909	1
18	GA3500681	HYDRAULIC CYLINDER, 2.5" BORE, 1 1/4" ROD, 350mm STROKE, 50mm CUSHION, BI-FOLD, TRITECH, MY20	1
19	GA3500700	HYDRAULIC ADAPTOR, ELBOW, 90 DEGREE, 9/16" JIC MALE X 3/4" UN MALE O-RING, S91-0912	2
20	GA5070530	LARGE ROSE END 1" X 1 1/4" UNF BB074-VM16	2
21	GA5012439	NUT 1" NYLOC UNC ZP	3
22	GA5012461	NUT M12 NYLOC ZP	8
23	GA5048125	NUT M20 NYLOC ZP	4
24	GA4000451	PLATE, BOOM BI-FOLD MECHANISM, TRITECH, LF SP S3	1
25	GA4404865	PLATE, BOOM BI-FOLD MECHANISM, TRITECH, MY20	1
26	GA5000321	SHCS M12 X 40 GR12.9 ZP	8
27	GA0500028	SHCS M20 X 50 GR 12.9 ZP	3
28	GA5048110	SET SCREW M20 X 2.0 X 60 GR8.8 ZP	1
29	GA5001557	SET SCREW M20 X 2.0 X 60 GR8.8 ZP	1
30	GA5017659	WASHER 1" FLAT ZP HD	6
31	GA5000577	WASHER M12 FLAT SS HD	16
32	GA5001741	WASHER M20 FLAT SS HD	5
33	GA5001721	WASHER M20 SPRING SS	1
34	GA0500078	WASHER, 1" ID X 1 7/8" OD X 1/8" THICK, NYLON	4
GA6101972-01 GOLDACRES		PRODUCTION DRAWING ONLY, BOOM BI FOLD ASSEMBLY, 36M LH, RIVX	REV 00

Bi-Fold, RH, Linkage, Ram Mount Assembly, RIVX

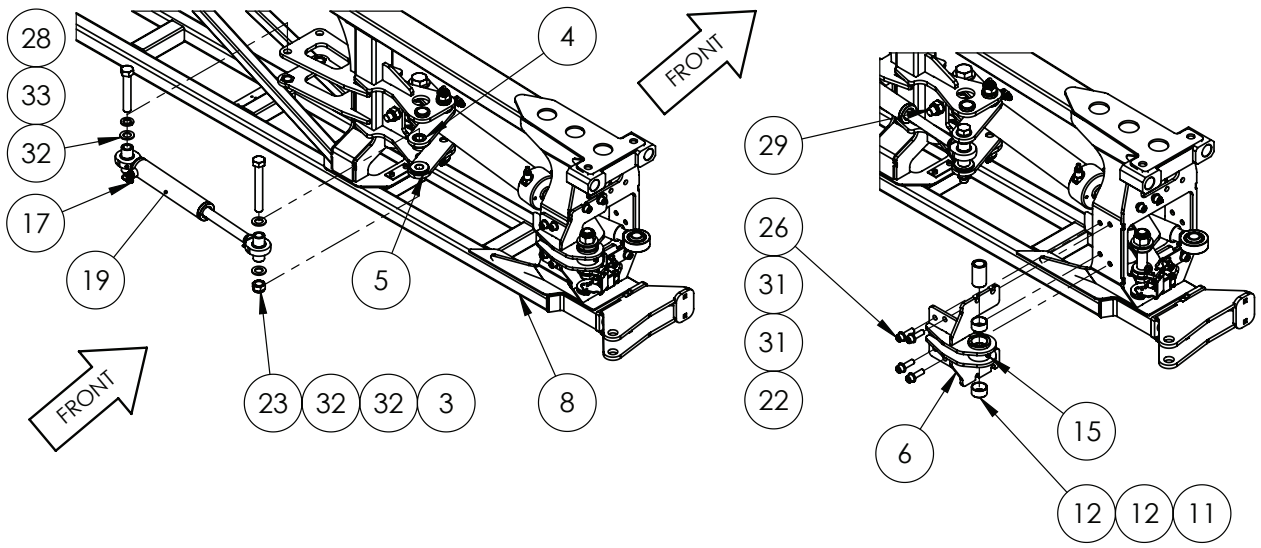

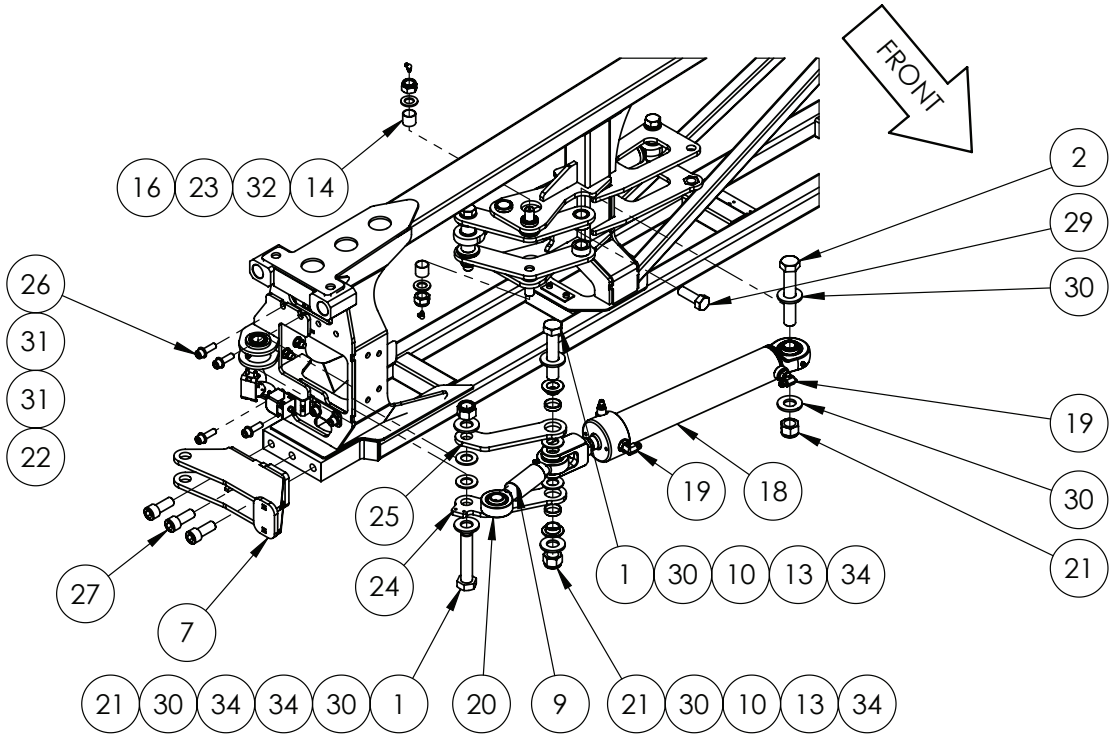

IF DESCRIPTION PREFIX IS ASSEMBLY DRAWING ONLY OR PRODUCTION DRAWING ONLY THE ITEM IS NOT FOR SALE			
ITEM	PART NUMBER	DESCRIPTION	QTY
1	GA5006031	BOLT 1" UNC X 5" GR8 ZP	2
2	GA5006033	BOLT 1" UNC X 6" GR8 ZP	1
3	GA5001531	BOLT M20 X 150 GR8.8 ZP	1
4	GA4602215	BOOM BI-FOLD BREAKAWAY LINK A, TRITECH MY20	1
5	GA4602220	BOOM BI-FOLD BREAKAWAY LINK B, TRITECH MY20	1
6	GA4602175	BOOM BI-FOLD LINKAGE MOUNT, TRITECH, MY20	1
7	GA4602140	BOOM HINGE MOUNT, BOLT ON, LOWER, TRITECH, MY19	1
8	GA4605085	BOOM WING, LH & RH INNER, 33-36M, RIVX	1
9	GA4551290	BUSH, BI-FOLD ADJUSTER LINK, 1 1/4"UNF X 90mm LONG, MY20 BOOM	1
10	GA4551535	BUSH, BOOM LINKAGE PIVOT, TRITECH S	2
11	GA4550210	BUSH, FOLD LINK BOOM END, TRITECH BOOM 2015	1
12	GA5055650	GLACIER BUSH, ID 35 X OD 39 X 20 LONG	2
13	GA5078612	GLACIER BUSH, 36mm OD X 32mm ID X 9mm LONG	2
14	GA5065487	GLACIER BUSH, 1" ID, 1.125" OD, 1" LONG	2
15	GA5012203	GREASE NIPPLE, SHORT, 1/4 UNF, MACH0207	1
16	GA5051970	GREASE NIPPLE, 6mm, 90 DEG	2
17	GA3500716	HYDRAULIC ADAPTOR ELBOW, 9/16" UNO TO 9/16" JIC, 90 DEG, S91-0909	1
18	GA3500681	HYDRAULIC CYLINDER, 2.5" BORE, 1 1/4" ROD, 350mm STROKE, 50mm CUSHION, BI-FOLD, TRITECH, MY20	1
19	GA3500700	HYDRAULIC ADAPTOR, ELBOW, 90 DEGREE, 9/16" JIC MALE X 3/4" UN MALE O-RING, S91-0912	2
20	GA5070530	LARGE ROSE END 1" X 1 1/4" UNF BB074-VM16	2
21	GA5012439	NUT 1" NYLOC UNC ZP	3
22	GA5012461	NUT M12 NYLOC ZP	8
23	GA5048125	NUT M20 NYLOC ZP	4
24	GA4000451	PLATE, BOOM BI-FOLD MECHANISM, TRITECH, LF SP S3	1
25	GA4404865	PLATE, BOOM BI-FOLD MECHANISM, TRITECH, MY20	1
26	GA5000321	SHCS M12 X 40 GR12.9 ZP	8
27	GA0500028	SHCS M20 X 50 GR 12.9 ZP	3
28	GA5048110	SET SCREW M20 X 2.0 X 60 GR8.8 ZP	1
29	GA5001557	SET SCREW M20 X 2.0 X 60 GR8.8 ZP	1
30	GA5017659	WASHER 1" FLAT ZP HD	6
31	GA5000577	WASHER M12 FLAT SS HD	16
32	GA5001741	WASHER M20 FLAT SS HD	5
33	GA5001721	WASHER M20 SPRING SS	1
34	GA0500078	WASHER, 1" ID X 1 7/8" OD X 1/8" THICK, NYLON	4
GA6101976-01 GOLDACRES		ASSEMBLY DRAWING ONLY, BOOM BI FOLD ASSEMBLY, 36M RH, RIVX SERIES 3	REV 00

Bi-Fold, LH, Linkage Sensor Assembly, RIVX

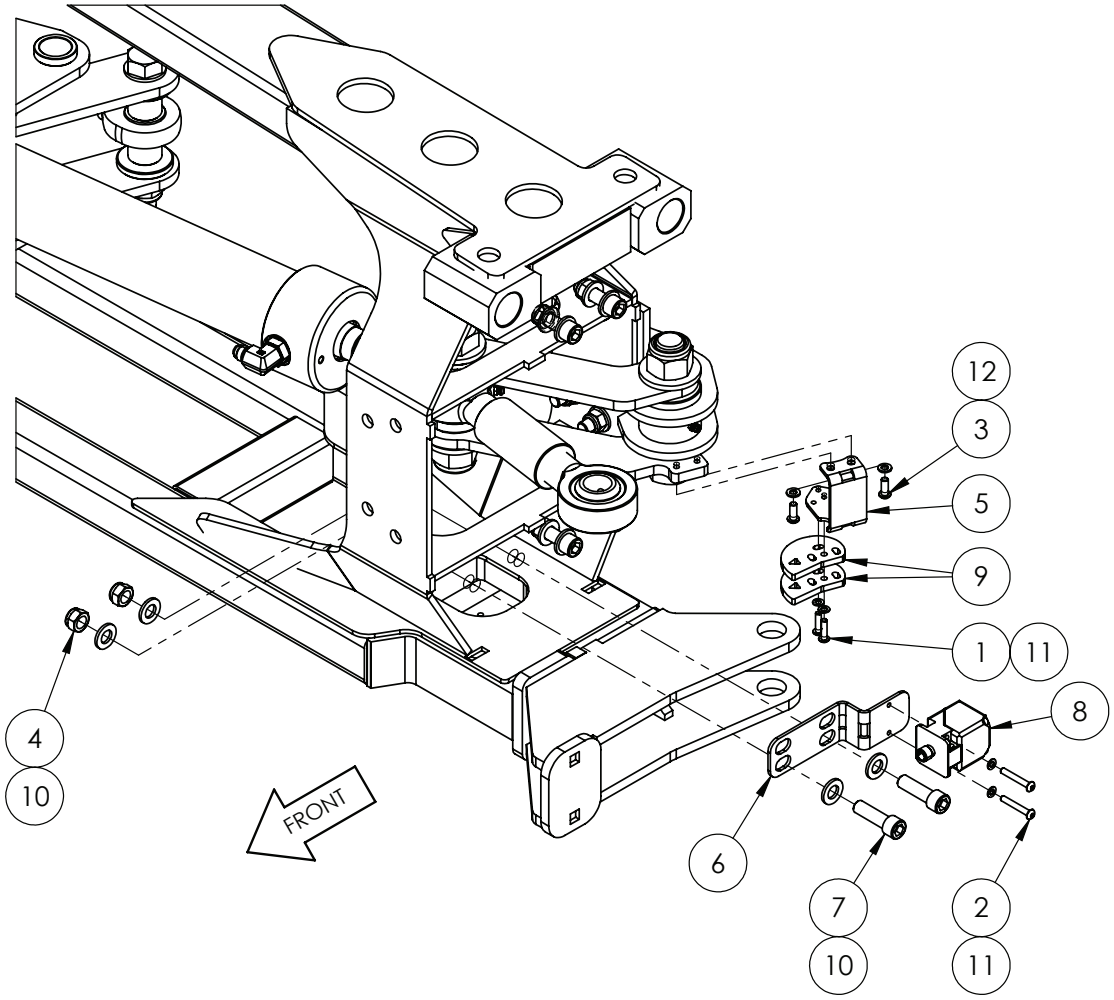

IF DESCRIPTION PREFIX IS ASSEMBLY DRAWING ONLY OR PRODUCTION DRAWING ONLY THE ITEM IS NOT FOR SALE			
ITEM	PART NUMBER	DESCRIPTION	QTY
1	GA0500004	BHCS M5 X 20 SS A2-70	2
2	GA0500142	BHCS M5 X 35 SS A2-70	2
3	GA5004050	BHCS M6 X 16 SS A2-70	2
4	GA5012461	NUT M12 NYLOC ZP	2
5	GA4000372	PLATE, BOOM, BI-FOLD CAM MOUNT, S3	1
6	GA4000373	PLATE, BOOM, BI-FOLD SENSOR MOUNT, S3	1
7	GA5000321	SHCS M12 X 40 GR12.9 ZP	2
8	GA3001176	SENSOR, INDUCTIVE ANALOGUE, 1-26mm, M12, IFM IM5141	1
9	GA4000267	SNAIL CAM, SUIT FOLD SENSOR, S3	2
10	GA5000577	WASHER M12 FLAT SS HD	4
11	GA5003983	WASHER M5 FLAT SS	4
12	GA5004437	WASHER M6 FLAT SS HD	2
GA6101972-01 GOLDACRES		PRODUCTION DRAWING ONLY, BOOM BI FOLD ASSEMBLY, 36M LH, RIVX	REV 00

Bi-Fold, RH, Linkage Sensor Assembly, RIVX

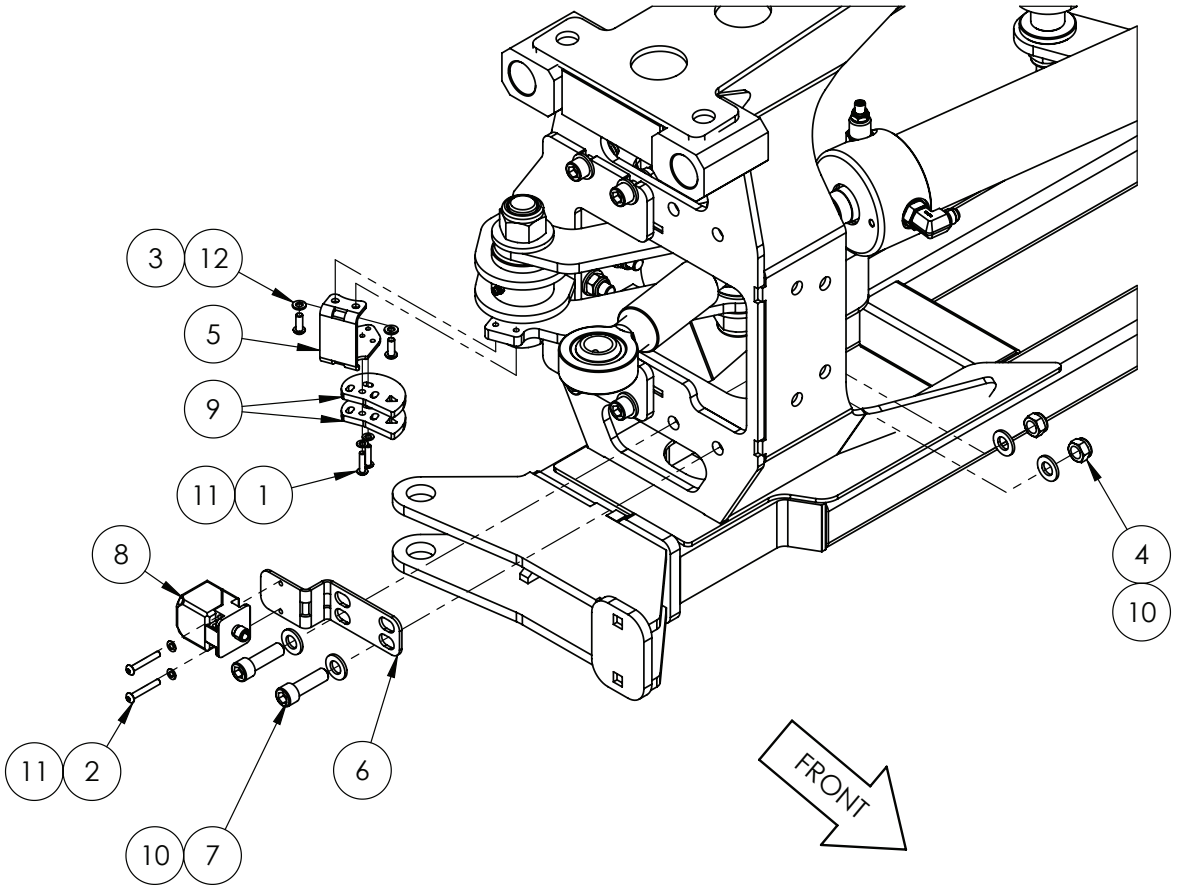

IF DESCRIPTION PREFIX IS ASSEMBLY DRAWING ONLY OR PRODUCTION DRAWING ONLY THE ITEM IS NOT FOR SALE			
ITEM	PART NUMBER	DESCRIPTION	QTY
1	GA0500004	BHCS M5 X 20 SS A2-70	2
2	GA0500142	BHCS M5 X 35 SS A2-70	2
3	GA5004050	BHCS M6 X 16 SS A2-70	2
4	GA5012461	NUT M12 NYLOC ZP	2
5	GA4000372	PLATE, BOOM, BI-FOLD CAM MOUNT, S3	1
6	GA4000373	PLATE, BOOM, BI-FOLD SENSOR MOUNT, S3	1
7	GA5000321	SHCS M12 X 40 GR12.9 ZP	2
8	GA3001176	SENSOR, INDUCTIVE ANALOGUE, 1-26mm, M12, IFM IM5141	1
9	GA4000267	SNAIL CAM, SUIT FOLD SENSOR, S3	2
10	GA5000577	WASHER M12 FLAT SS HD	4
11	GA5003983	WASHER M5 FLAT SS	4
12	GA5004437	WASHER M6 FLAT SS HD	2
GA6101976-01 GOLDACRES		ASSEMBLY DRAWING ONLY, BOOM BI FOLD ASSEMBLY, 36M RH, RIVX SERIES 3	REV 00

Bi-Fold, LH, Boom Catch & Boom Slide Protectors, RIVX

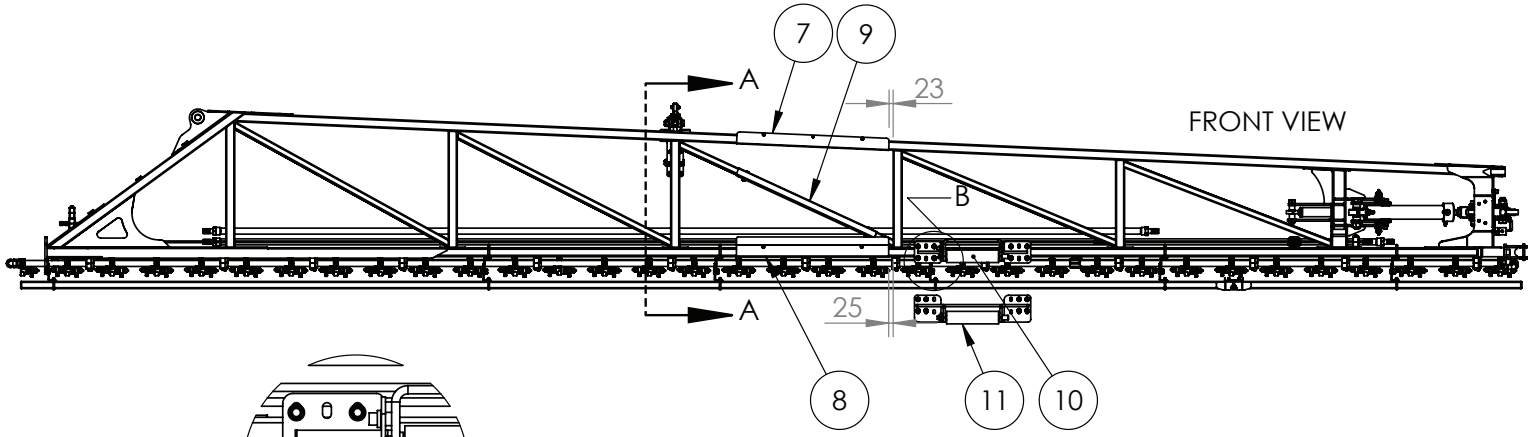

FIT ITEM (10) IF
PRARIE PRO BOOM
FIT NUDGE BAR MOUNT UNLESS
BEHIND ROLLER

FIT ITEM (11) IF PRARIE PRO
BOOM & OPTION 65212

FIT (7), (8), (9) AND
ASSOCIATED FASTENERS
IF SELF-PROPELED BOOM

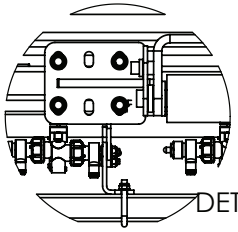

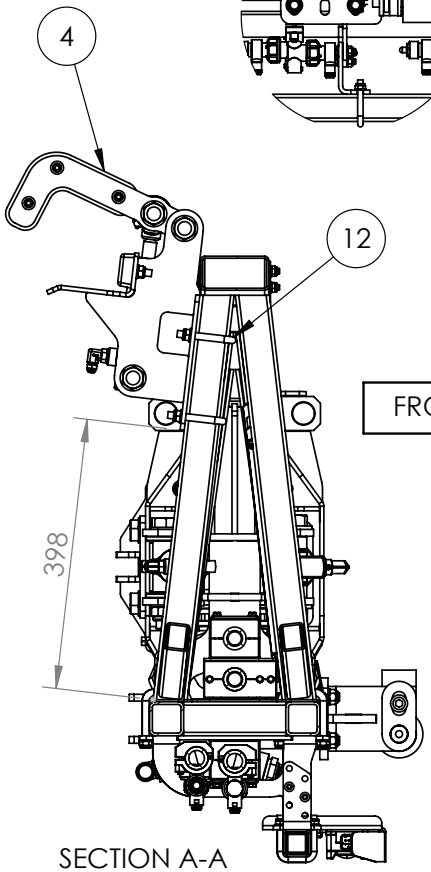

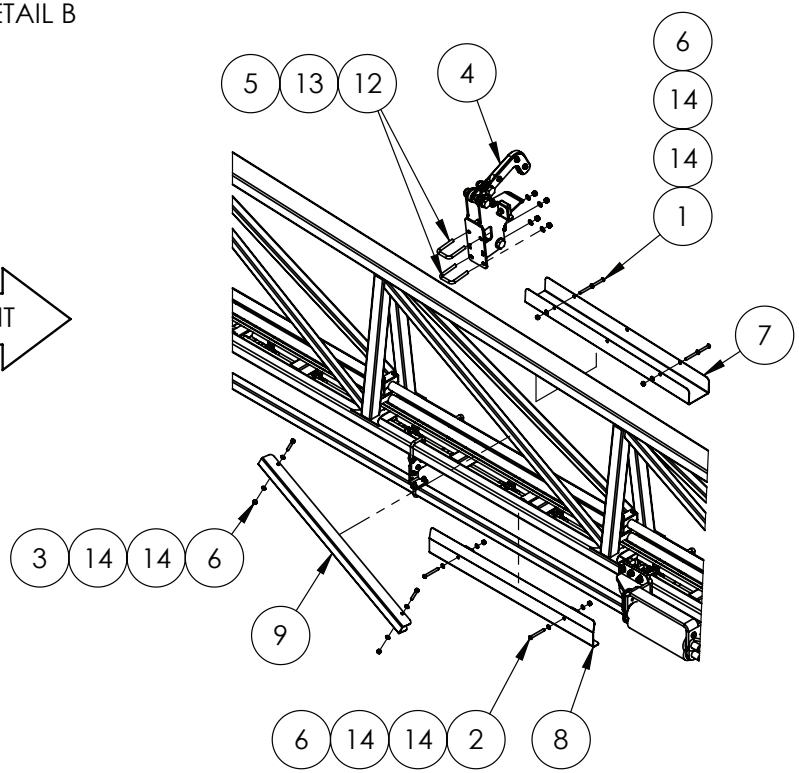

IF DESCRIPTION PREFIX IS ASSEMBLY DRAWING ONLY OR PRODUCTION DRAWING ONLY THE ITEM IS NOT FOR SALE			
ITEM	PART NUMBER	DESCRIPTION	QTY
1	GA0500187	BHCS M8 X 120 SS A2-70	2
2	GA5078889	BHCS M8 X 70 SS A2-70	2
3	GA5054700	BOLT M8 X 50 SS A2-70	2
4	GA4949742	BOOM BIFOLD CATCH ASSEMBLY, WIDE	1
5	GA5000141	NUT M10 NYLOC ZP	4
6	GA5004917	NUT M8 NYLOC ZP	6
7	GA4408155	PROTECTOR, BOOM CORD, SUIT 100 X 50, 600mm, SS	1
8	GA4402215	PROTECTOR, BOOM CORD, SUIT 50 X 50, EXTENDED GUIDE, SS	1
9	GA4000242	PROTECTOR, BOOM DIAGONAL BRACE, SUIT 35 X 35, 300mm, SS	1
10	GA4951165	SUB ASSEMBLY, BOOM REST, RIVX ROLLER, PRAIRIE PRO, 2021	1
11	GA4909650	SUB ASSEMBLY, BOOM REST, RIVX ROLLER, PRAIRIE PRO, WEEDETECT NIR	1
12	GA5053645	U BOLT SQUARE TOP M10 X 52 X 75	2
13	GA5000117	WASHER M10 FLAT SS HD	4
14	GA5003643	WASHER M8 FLAT SS HD	12
15	GA5004447	WASHER M6 SPRING SS	26
GA6101972-02 GOLDACRES		PRODUCTION DRAWING ONLY, BOOM INNER ASSEMBLY, 36M LH, RIVX	REV 00.A

Bi-Fold, RH, Boom Catch & Boom Slide Protectors, RIVX

FIT ITEM (10) IF
PRARIE PRO BOOM
FIT NUDGE BAR MOUNT UNLESS
BEHIND ROLLER

FIT ITEM (11) IF PRARIE PRO
BOOM & OPTION 65212

FIT (7), (8), (9) WITH
ASSOCIATED FASTENERS
IF SELF-PROPELLED BOOM

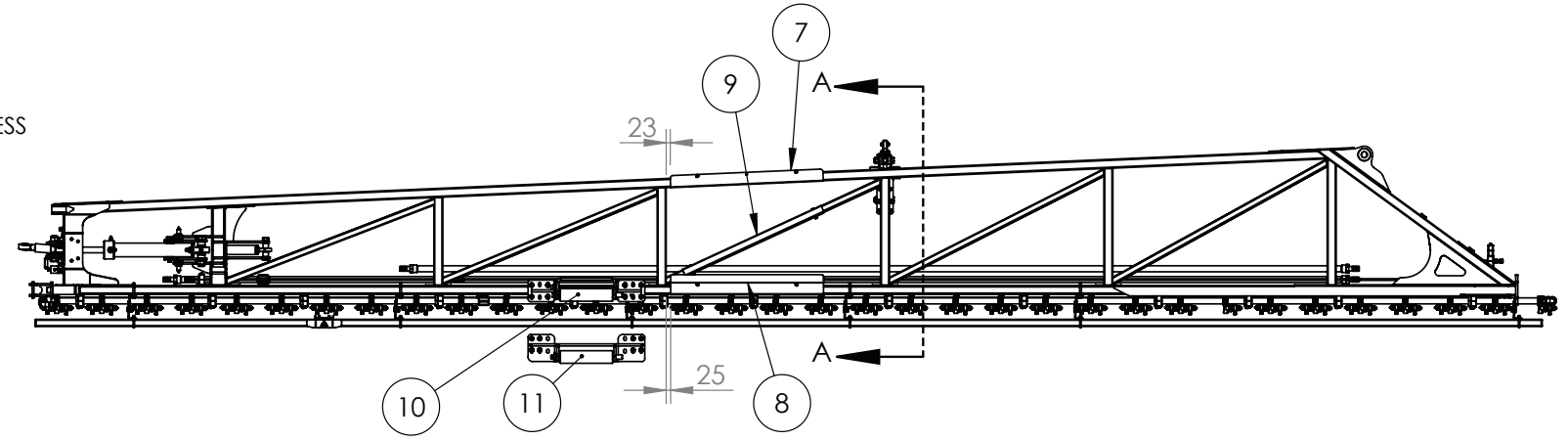

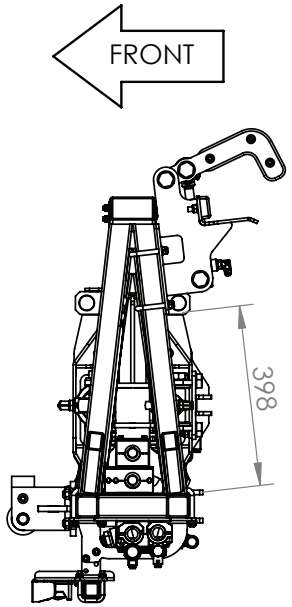

SECTION A-A

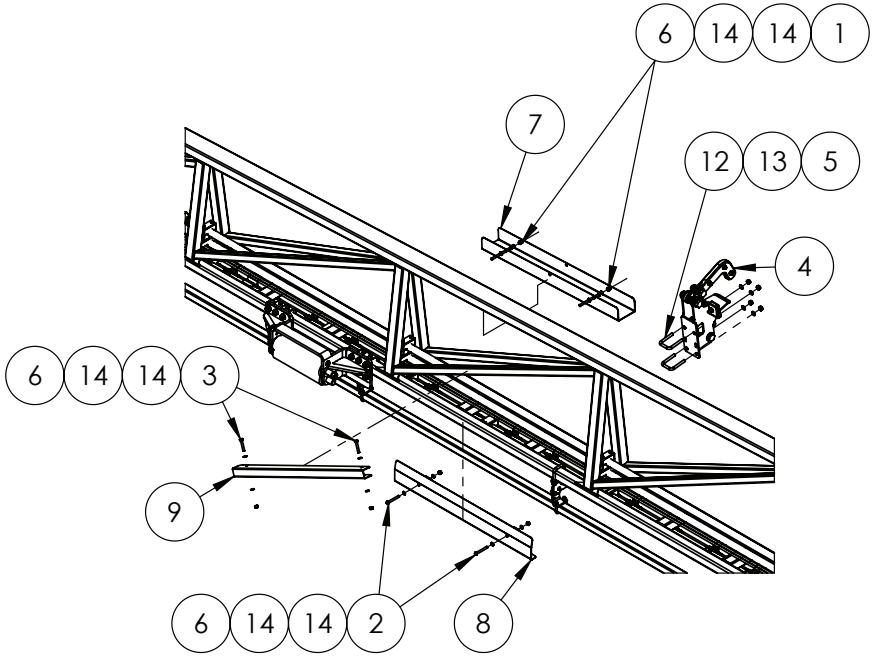

IF DESCRIPTION PREFIX IS ASSEMBLY DRAWING ONLY OR PRODUCTION DRAWING ONLY THE ITEM IS NOT FOR SALE			
ITEM	PART NUMBER	DESCRIPTION	QTY.
1	GA0500187	BHCS M8 X 120 SS A2-70	2
2	GA5078889	BHCS M8 X 70 SS A2-70	2
3	GA5054700	BOLT M8 X 50 SS A2-70	2
4	GA4949742	BOOM BIFOLD CATCH ASSEMBLY, WIDE	1
5	GA5000141	NUT M10 NYLOC ZP	4
6	GA5004917	NUT M8 NYLOC ZP	6
7	GA4408155	PROTECTOR, BOOM CORD, SUIT 100 X 50, 600mm, SS	1
8	GA4402215	PROTECTOR, BOOM CORD, SUIT 50 X 50, EXTENDED GUIDE, SS	1
9	GA4000242	PROTECTOR, BOOM DIAGONAL BRACE, SUIT 35 X 35, 300mm, SS	1
10	GA4951165	SUB ASSEMBLY, BOOM REST, RIVX ROLLER, PRAIRIE PRO, 2021	1
11	GA4909650	SUB ASSEMBLY, BOOM REST, RIVX ROLLER, PRAIRIE PRO, WEEDETECT NIR	1
12	GA5053645	U BOLT SQUARE TOP M10 X 52 X 75	2
13	GA5000117	WASHER M10 FLAT SS HD	4
14	GA5003643	WASHER M8 FLAT SS HD	12
GA6101976-02 GOLDACRES		ASSEMBLY DRAWING ONLY, BOOM INNER ASSEMBLY, 36M RH, RIVX SERIES 3	REV 00.A

Boom, Bi-fold Catch Assy, Dual Rubber, RIVX

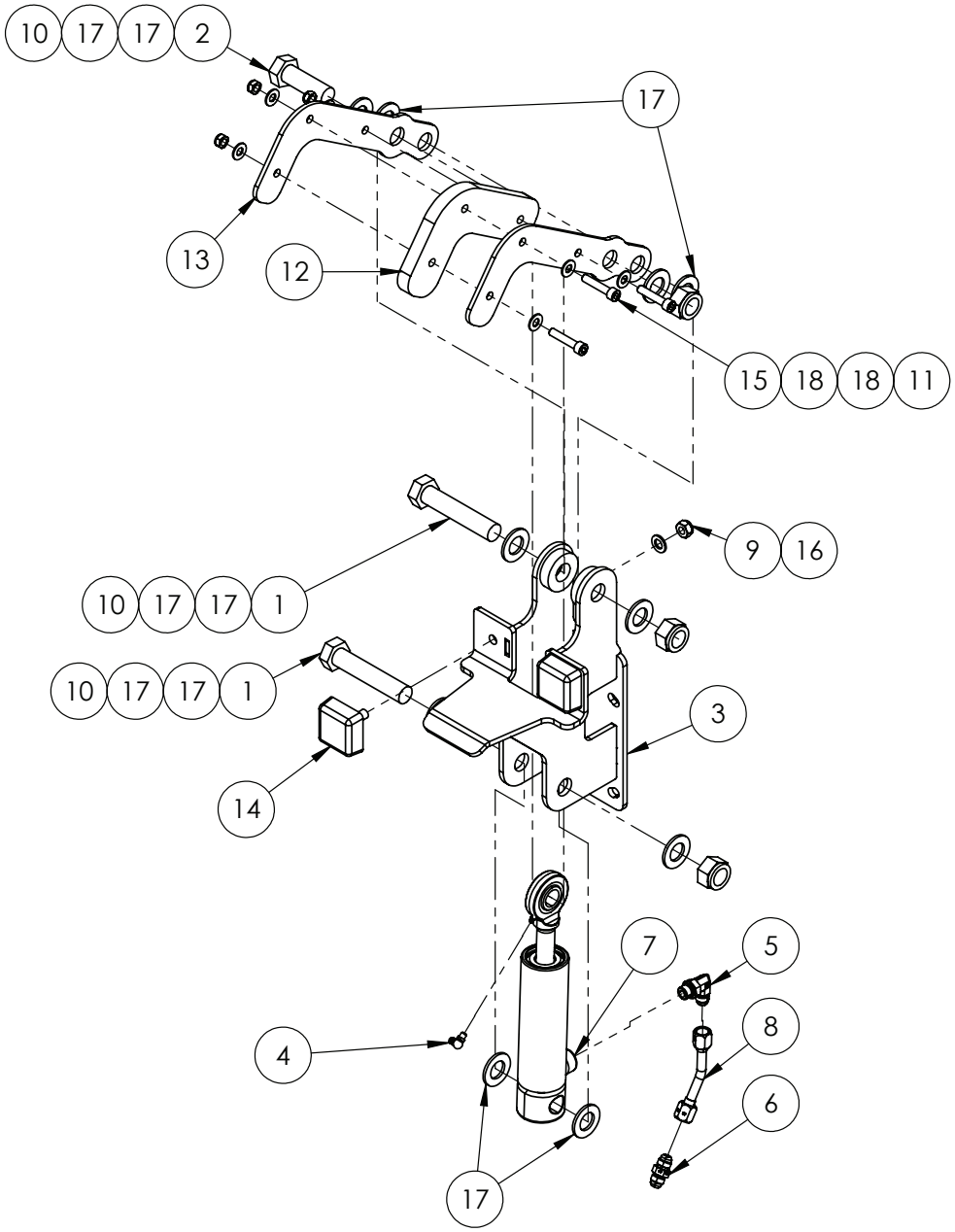

IF DESCRIPTION PREFIX IS ASSEMBLY DRAWING ONLY OR PRODUCTION DRAWING ONLY THE ITEM IS NOT FOR SALE			
ITEM	PART NUMBER	DESCRIPTION	QTY
1	GA5048355	BOLT M20 X 100 GR8.8 ZP	2
2	GA5011333	BOLT M20 X 60 GR8.8 ZP	1
3	GA5078976	BOOM BIFOLD CATCH BRACKET, WIDE	1
4	GA5051970	GREASE NIPPLE, 6mm, 90 DEG	1
5	GA3500716	HYDRAULIC ADAPTOR ELBOW, 9/16" UNO TO 9/16" JIC, 90 DEG, S91-0909	1
6	GA3500202	HYDRAULIC ADAPTOR NIPPLE. 9/16" JIC TO 9/16" JIC, S17-0909	1
7	GA3500480	HYDRAULIC CYLINDER, BORE 1.5", ROD 0.75", STROKE 28mm, DISPLACEMENT, SPRING RETURN	1
8	GA3502116	HYDRAULIC TUBE, 3/8" TUBE 9/16" JIC FEMALE ENDS, 30 DEG ELBOW	1
9	GA5000141	NUT M10 NYLOC ZP	2
10	GA5048125	NUT M20 NYLOC COARSE ZP	3
11	GA5052590	NUT M8 NYLOC SS	3
12	GA5078934	PLASTIC BOOM BIFOLD CATCH HOOK, RIVX	1
13	GA4415680	PLATE, LATCH BRACKET, BOOM LATCH, WIDE, RIVX BOOM	2
14	GA5078569	RUBBER BUFFER, 50 X 50 X 20mm SQUARE, M10 X 28mm MALE THREAD	2
15	GA5011487	SHCS M8 X 40 GR 12.9 ZP	3
16	GA5000117	WASHER 10mm FLAT SS HD	2
17	GA5001741	WASHER 20mm FLAT SS HD	10
18	GA5003643	WASHER 8mm FLAT SS HD	6
GA4949742 GOLDACRES		BOOM BIFOLD CATCH ASSEMBLY, WIDE	REV 02

Boom Rest, RIVX Roller, Weedetect & N.I.R

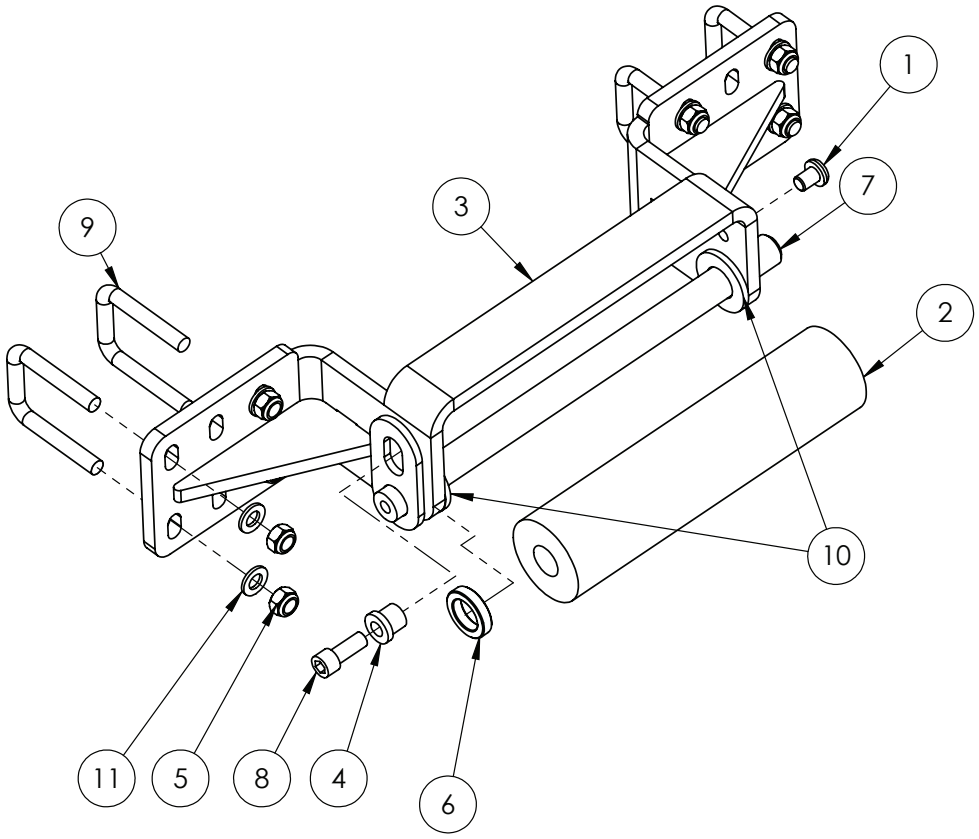

ITEM (6) FITTED ON SHAFT BETWEEN SHAFT PLATE & REST BODY

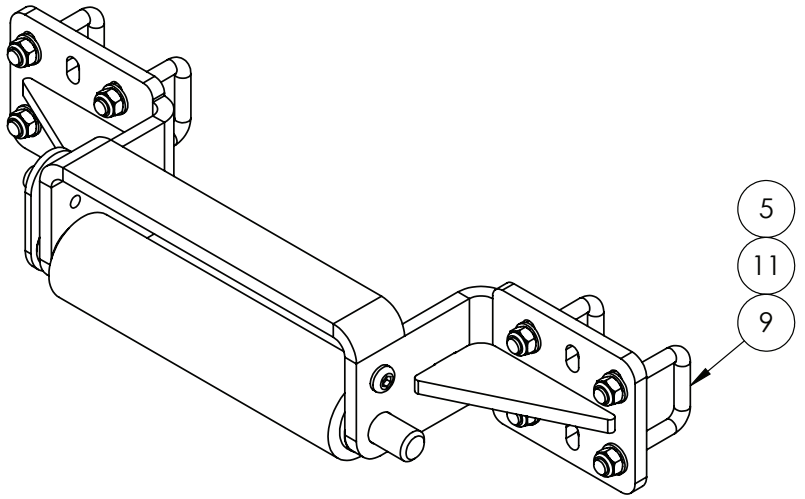

IF DESCRIPTION PREFIX IS ASSEMBLY DRAWING ONLY OR PRODUCTION DRAWING ONLY THE ITEM IS NOT FOR SALE			
ITEM	PART NUMBER	DESCRIPTION	QTY
1	GA5069890	BHCS M12 X 16 GR12.9 ZP	1
2	GA5070700	BOOM REST ROLLER, BLACK, 290mm LONG SUIT PRAIRIE	1
3	GA4603260	BOOM REST, RIVX ROLLER, PRAIRIE PRO, 2021	1
4	MACH0152	BUSH WITH SHOULDER, 12.3 ID X 25 OD X 21 LONG, SUIT PARALIFT PIN BOLTS	1
5	GA5001030	NUT M12 NYLOC GALVANISED	8
6	GA4572135	PARALIFT SPACER BUSH	1
7	GA4658745	PIN - SUIT BOOM REST ROLLER	1
8	GA5000307	SHCS M12 X 30 GR12.9 ZP	1
9	GA5011251	U BOLT SQUARE TOP M12 X 52mm X 80mm	4
10	GA5017659	WASHER 1 FLAT ZP HD (5mm THICK)	2
11	GA5000577	WASHER 12mm FLAT SS HD	8
GA4951165 GOLDACRES		SUB ASSEMBLY, BOOM REST, RIVX ROLLER, PRAIRIE PRO, 2021	REV 01

Boom Rest, RIVX Roller, Weedetect N.I.R

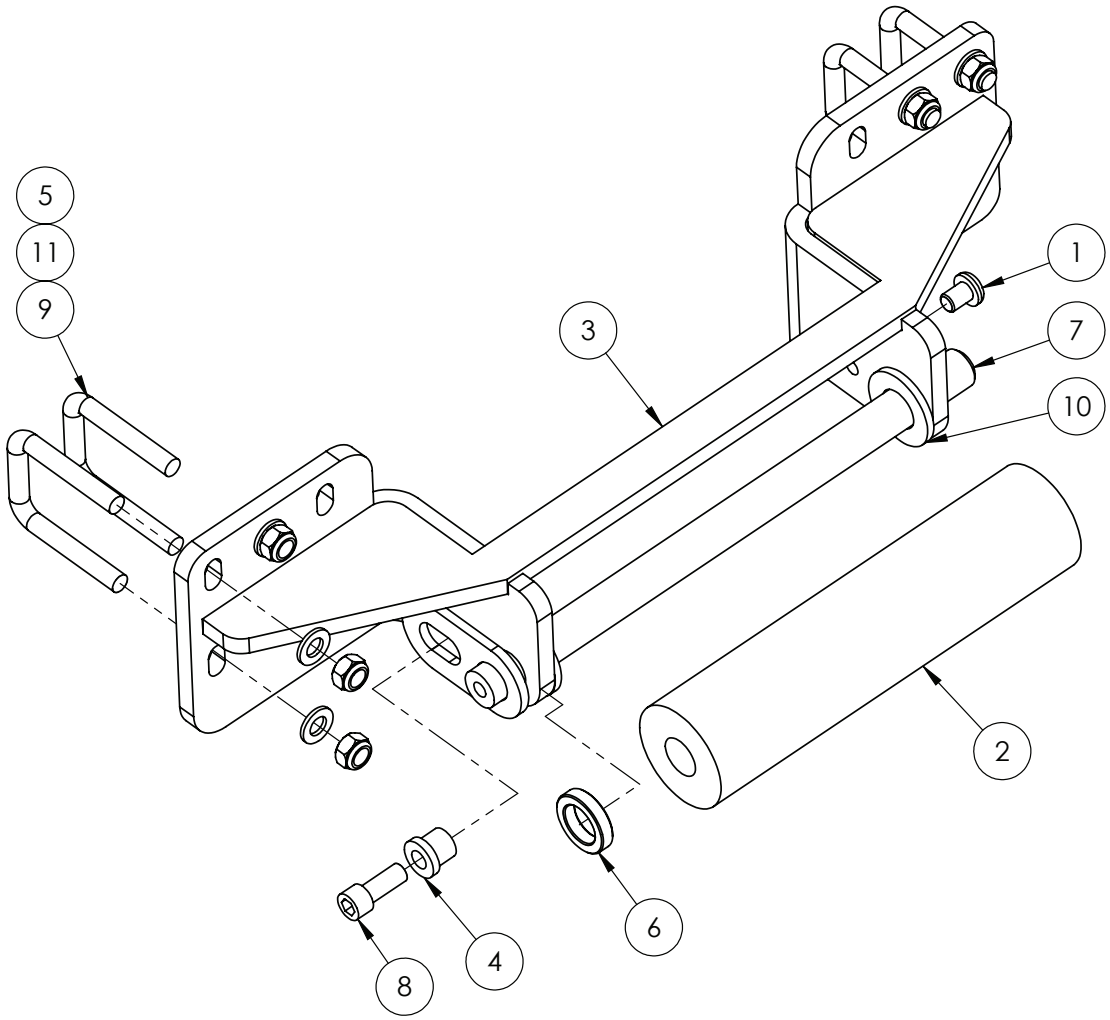

IF DESCRIPTION PREFIX IS ASSEMBLY DRAWING ONLY OR PRODUCTION DRAWING ONLY THE ITEM IS NOT FOR SALE			
ITEM	PART NUMBER	DESCRIPTION	QTY
1	GA5069890	BHCS M12 X 16 GR12.9 ZP	1
2	GA5070700	BOOM REST ROLLER, BLACK, 290mm LONG SUIT PRAIRIE	1
3	GA4605139	BOOM REST, RIVX ROLLER, PRAIRIE PRO, WEEDETECT NIR	1
4	MACH0152	BUSH WITH SHOULDER, 12.3 ID X 25 OD X 21 LONG, SUIT PARALIFT PIN BOLTS	1
5	GA5001030	NUT M12 NYLOC GALVANISED	8
6	GA4572135	PARALIFT SPACER BUSH	1
7	GA4658745	PIN - SUIT BOOM REST ROLLER	1
8	GA5000307	SHCS M12 X 30 GR12.9 ZP	1
9	GA5011251	U BOLT SQUARE TOP M12 X 52mm X 80mm	4
10	GA5017659	WASHER 1 FLAT ZP HD (5mm THICK)	2
11	GA5000577	WASHER 12mm FLAT SS HD	8
GA4909650 GOLDACRES		SUB ASSEMBLY, BOOM REST, RIVX ROLLER, PRAIRIE PRO, WEEDETECT NIR	REV 00

Boom Wing, LH Inner, Hydraulic Tube & Recirculation Mounting, RIVX

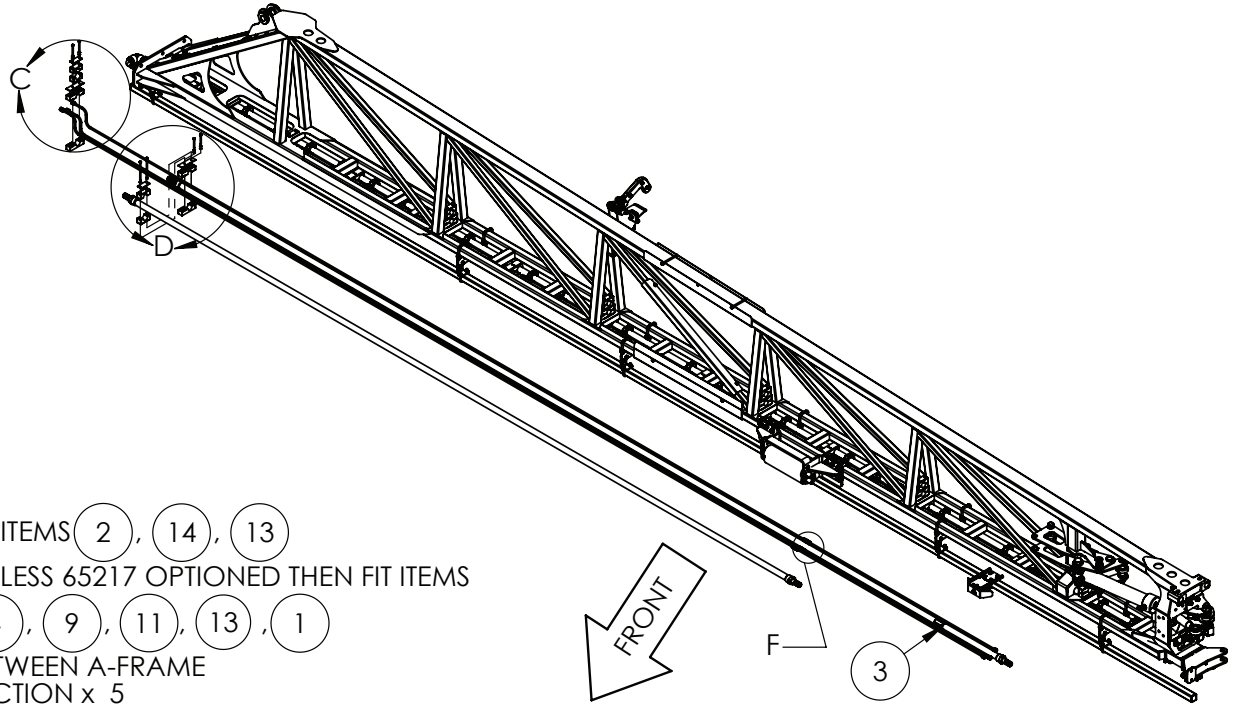

FIT ITEMS (2), (14), (13)

UNLESS 65217 OPTIONED THEN FIT ITEMS

(4), (9), (11), (13), (1)

BETWEEN A-FRAME SECTION x 5

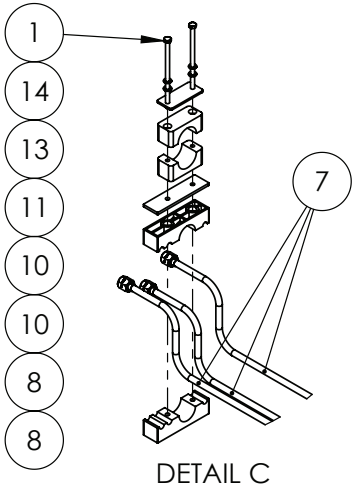

DETAIL C

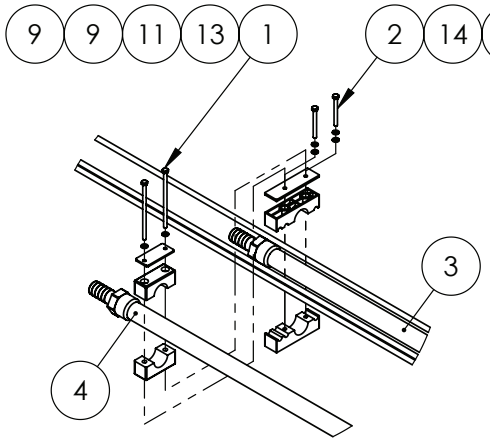

DETAIL D

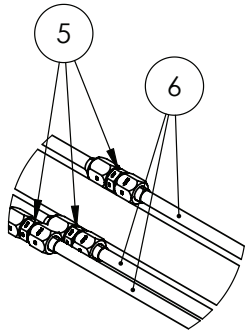

DETAIL F

IF DESCRIPTION PREFIX IS ASSEMBLY DRAWING ONLY OR PRODUCTION DRAWING ONLY THE ITEM IS NOT FOR SALE			
ITEM	PART NUMBER	DESCRIPTION	QTY.
1	GA5011389	BOLT M6 X 120 GR8.8 ZP	12
2	GA0500085	BOLT M6 X 60 SS A2-70	12
3	GA4950605	BOOM POLY ASSEMBLY, 36M, INNER SECTION, BOOM RECIRCULATION,RIVX	1
4	GA4909544	BOOM POLY ASSEMBLY, 36M, INNER SECTION, BOOM RECIRCULATION,RIVX	1
5	GA3500202	HYDRAULIC ADAPTOR NIPPLE. 9/16" JIC TO 9/16" JIC, S17-0909	3
6	GA3500696	HYDRAULIC TUBE, 3/8" TUBE, 9/16" JIC FEMALE ENDS, BOOM SECTION B, TRITECH, MY20	3
7	GA3500695	HYDRAULIC TUBE, 3/8" TUBE, 9/16" JIC FEMALE ENDS, BOOM SECTION A, TRITECH, MY20	3
8	GA3500707	MOUNTING CLAMP, JAW, SINGLE, GROUP 5, 33.7mm CENTRE WITH 3 X 10mm	14
9	GA3500699	MOUNTING CLAMP, SINGLE TYPE, JAW, PAIR, GROUP 5, 33.7mm, RCS-33.5J	5
10	GA5078070	MOUNTING CLAMP, SINGLE TYPE, JAW, PAIR, GROUP 5, 38mm, RCS-38J	1
11	GA5078075	MOUNTING CLAMP, SINGLE TYPE, PLATE, TOP, GROUP 5, RCS-5PT	6
12	GA4406140	PLATE, BOOM PLUMBING AND HYDRAULIC LINE CLAMP, TOP PLATE	7
13	GA5004437	WASHER M6 FLAT SS HD	24
14	GA5004447	WASHER M6 SPRING SS	40
GA6101972-02 GOLDACRES		PRODUCTION DRAWING ONLY, BOOM INNER ASSEMBLY, 36M LH, RIVX	REV 00.A

Boom Wing, RH Inner, Hydraulic Tube & Recirculation Mounting, RIVX

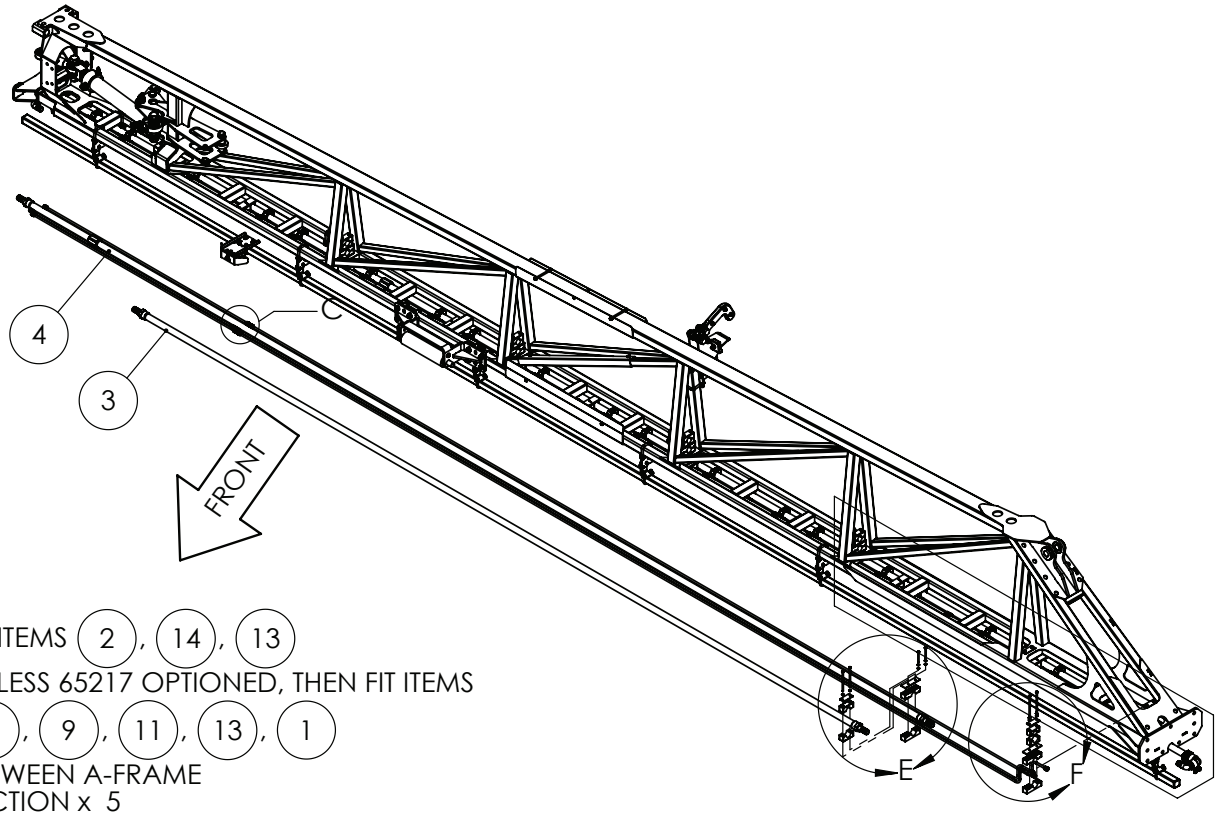

FIT ITEMS (2), (14), (13)

UNLESS 65217 OPTIONED, THEN FIT ITEMS

(3), (9), (11), (13), (1)

BETWEEN A-FRAME SECTION x 5

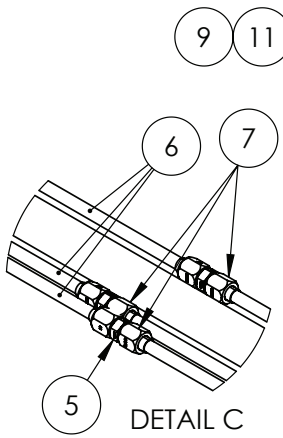

DETAIL C

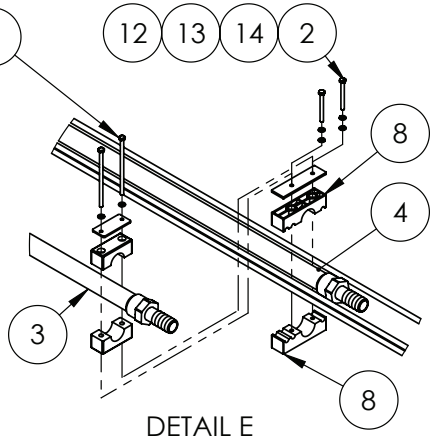

DETAIL E

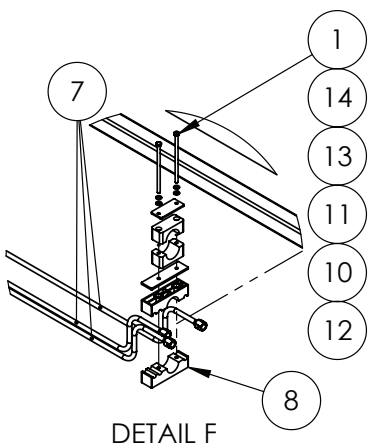

DETAIL F

IF DESCRIPTION PREFIX IS ASSEMBLY DRAWING ONLY OR PRODUCTION DRAWING ONLY THE ITEM IS NOT FOR SALE			
ITEM	PART NUMBER	DESCRIPTION	QTY
1	GA5011389	BOLT M6 X 120 GR8.8 ZP	12
2	GA0500085	BOLT M6 X 60 SS A2-70	12
3	GA4909544	BOOM POLY ASSEMBLY, 36M, INNER SECTION, BOOM RECIRCULATION,RIVX	1
4	GA4950605	BOOM POLY ASSEMBLY, 36M, INNER SECTION, BOOM RECIRCULATION,RIVX	1
5	GA3500202	HYDRAULIC ADAPTOR NIPPLE. 9/16" JIC TO 9/16" JIC, S17-0909	3
6	GA3500696	HYDRAULIC TUBE, 3/8" TUBE, 9/16" JIC FEMALE ENDS, BOOM SECTION B, TRITECH, MY20	3
7	GA3500695	HYDRAULIC TUBE, 3/8" TUBE, 9/16" JIC FEMALE ENDS, BOOM SECTION A, TRITECH, MY20	3
8	GA3500707	MOUNTING CLAMP, JAW, SINGLE, GROUP 5, 33.7mm CENTRE WITH 3 X 10mm	14
9	GA3500699	MOUNTING CLAMP, SINGLE TYPE, JAW, PAIR, GROUP 5, 33.7mm, RCS-33.5J	5
10	GA5078070	MOUNTING CLAMP, SINGLE TYPE, JAW, PAIR, GROUP 5, 38mm, RCS-38J	1
11	GA5078075	MOUNTING CLAMP, SINGLE TYPE, PLATE, TOP, GROUP 5, RCS-5PT	6
12	GA4406140	PLATE, BOOM PLUMBING AND HYDRAULIC LINE CLAMP, TOP PLATE	7
13	GA5004437	WASHER M6 FLAT SS HD	24
14	GA5004447	WASHER M6 SPRING SS	14
GA6101976-02 GOLDACRES		ASSEMBLY DRAWING ONLY, BOOM INNER ASSEMBLY, 36M RH, RIVX SERIES 3	REV 00.A

Boom Wing, LH Inner, Nudge Bar & Boom Poly Mounting, RIVX

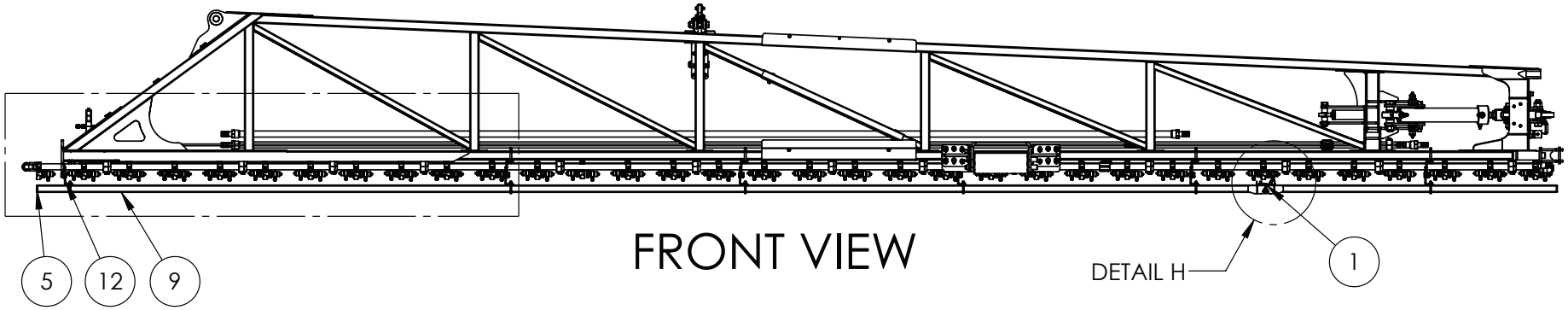

FRONT VIEW

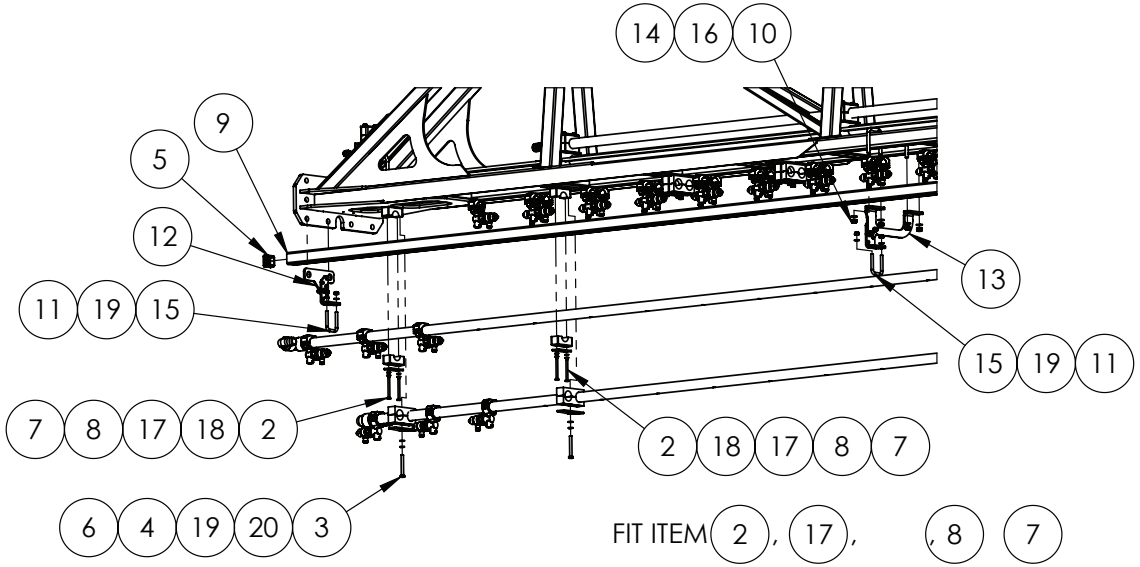

FIT ITEM (2), (17), (8) (7)
UNLESS 65217 OPTIONED THEN FIT
(3), (20), (19), (4) & (6)

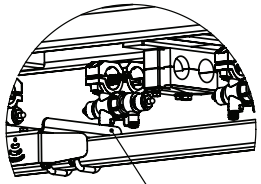

DETAIL H (1) FIT ITEM (1) IF 30074 OPTIONED

IF DESCRIPTION PREFIX IS ASSEMBLY DRAWING ONLY OR PRODUCTION DRAWING ONLY THE ITEM IS NOT FOR SALE			
ITEM	PART NUMBER	DESCRIPTION	QTY
1	GA4912625	ASSEMBLY DRAWING ONLY, BRACKET, SENSOR, RAVEN XRT 107-0235-001	1
2	GA5004105	BOLT M6 X 70 SS A2-70	26
3	GA5004737	BOLT M8 X 70 SS A2-70	13
4	GA5025540	COVER PLATE, RCD-33.7	13
5	GA5002963	INSERT 38X38MM CAP	2
6	GA5025535	JAW CLAMPS, PAIR, RCD-33.7	13
7	GA3500699	MOUNTING CLAMP, SINGLE TYPE, JAW, PAIR, GROUP 5, 33.7mm, RCS-33.5J	13
8	GA5078075	MOUNTING CLAMP, SINGLE TYPE, PLATE, TOP, GROUP 5, RCS-5PT	13
9	GA4553237	NUDGE BAR, 36M INNER, RIVX	1
10	GA5000141	NUT M10 NYLOC ZP	20
11	GA5004917	NUT M8 NYLOC ZP	12
12	GA4953950	PRODUCTION DRAWING ONLY, NOZZLE GUARD MOUNT, RIVX BOOM, INNER	1
13	GA4953945	PRODUCTION DRAWING ONLY, NOZZLE GUARD MOUNTING, RIVX BOOM, INNER	5
14	GA5053645	U BOLT SQUARE TOP M10 X 52 X 75	10
15	GA0500084	U BOLT SQUARE TOP M8 X 42 X 65, 304 SS	6
16	GA5000117	WASHER M10 FLAT SS HD	20
17	GA5004437	WASHER M6 FLAT SS HD	26
18	GA5004447	WASHER M6 SPRING SS	26
19	GA5003643	WASHER M8 FLAT SS HD	25
20	GA5004919	WASHER M8 SPRING SS	13
GA6101972-02 GOLDACRES		PRODUCTION DRAWING ONLY, BOOM INNER ASSEMBLY, 36M LH, RIVX	REV 00.A

Boom Wing, RH Inner, Nudge Bar & Boom Poly Mounting, RIVX

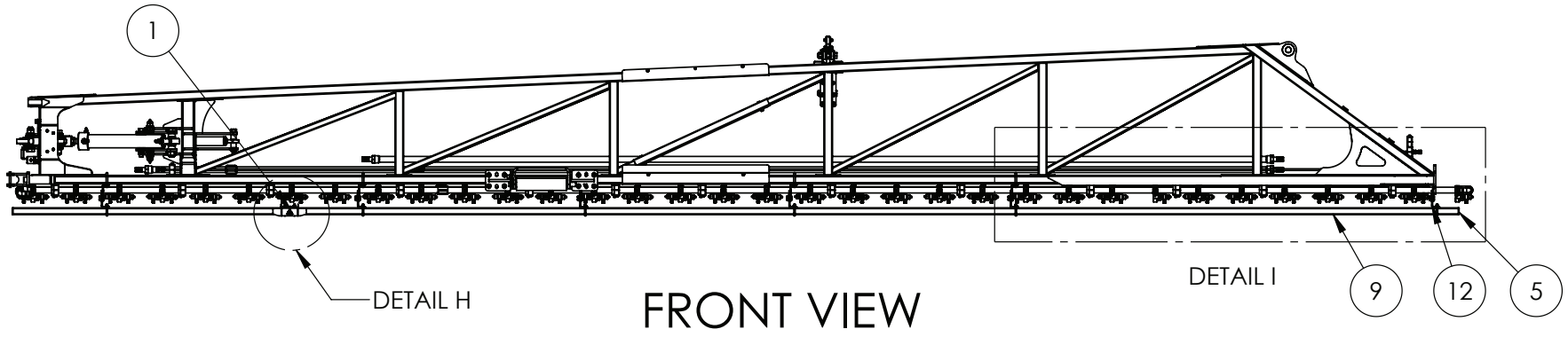

FRONT VIEW

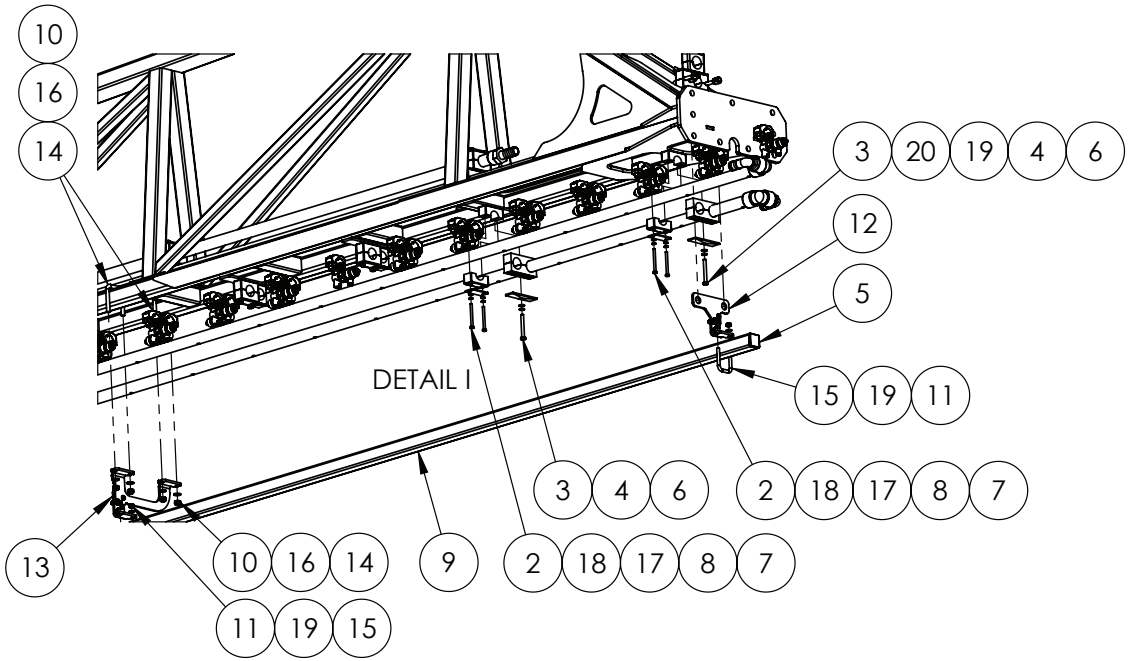

FIT ITEMS 2 18 17 8 7
UNLESS 65217 OPTIONED, THEN FIT
3 20 19 4 6

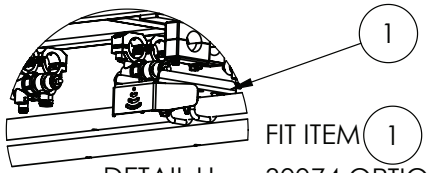

DETAIL H

FIT ITEM 1 IF 30074 OPTIONED

IF DESCRIPTION PREFIX IS ASSEMBLY DRAWING ONLY OR PRODUCTION DRAWING ONLY THE ITEM IS NOT FOR SALE			
ITEM	PART NUMBER	DESCRIPTION	QTY
1	GA4912625	ASSEMBLY DRAWING ONLY, BRACKET, SENSOR, RAVEN XRT 107-0235-001	1
2	GA5004105	BOLT M6 X 70 SS A2-70	26
3	GA5004737	BOLT M8 X 70 SS A2-70	13
4	GA5025540	COVER PLATE, RCD-33.7	13
5	GA5002963	INSERT 38X38MM CAP	2
6	GA5025535	JAW CLAMPS, PAIR, RCD-33.7	13
7	GA3500699	MOUNTING CLAMP, SINGLE TYPE, JAW, PAIR, GROUP 5, 33.7mm, RCS-33.5J	13
8	GA5078075	MOUNTING CLAMP, SINGLE TYPE, PLATE, TOP, GROUP 5, RCS-5PT	13
9	GA4553237	NUDGE BAR, 36M INNER, RIVX	1
10	GA5000141	NUT M10 NYLOC ZP	20
11	GA5004917	NUT M8 NYLOC ZP	12
12	GA4953950	PRODUCTION DRAWING ONLY, NOZZLE GUARD MOUNT, RIVX BOOM, INNER	1
13	GA4953945	PRODUCTION DRAWING ONLY, NOZZLE GUARD MOUNTING, RIVX BOOM, INNER	5
14	GA5053645	U BOLT SQUARE TOP M10 X 52 X 75	10
15	GA0500084	U BOLT SQUARE TOP M8 X 42 X 65, 304 SS	6
16	GA5000117	WASHER M10 FLAT SS HD	20
17	GA5004437	WASHER M6 FLAT SS HD	26
18	GA5004447	WASHER M6 SPRING SS	26
19	GA5003643	WASHER M8 FLAT SS HD	25
20	GA5004919	WASHER M8 SPRING SS	13
GA6101976-02 GOLDACRES		ASSEMBLY DRAWING ONLY, BOOM INNER ASSEMBLY, 36M RH, RIVX SERIES 3	REV 00.A

Boom Wing, LH, Aluminium Outer Mounting, RIVX

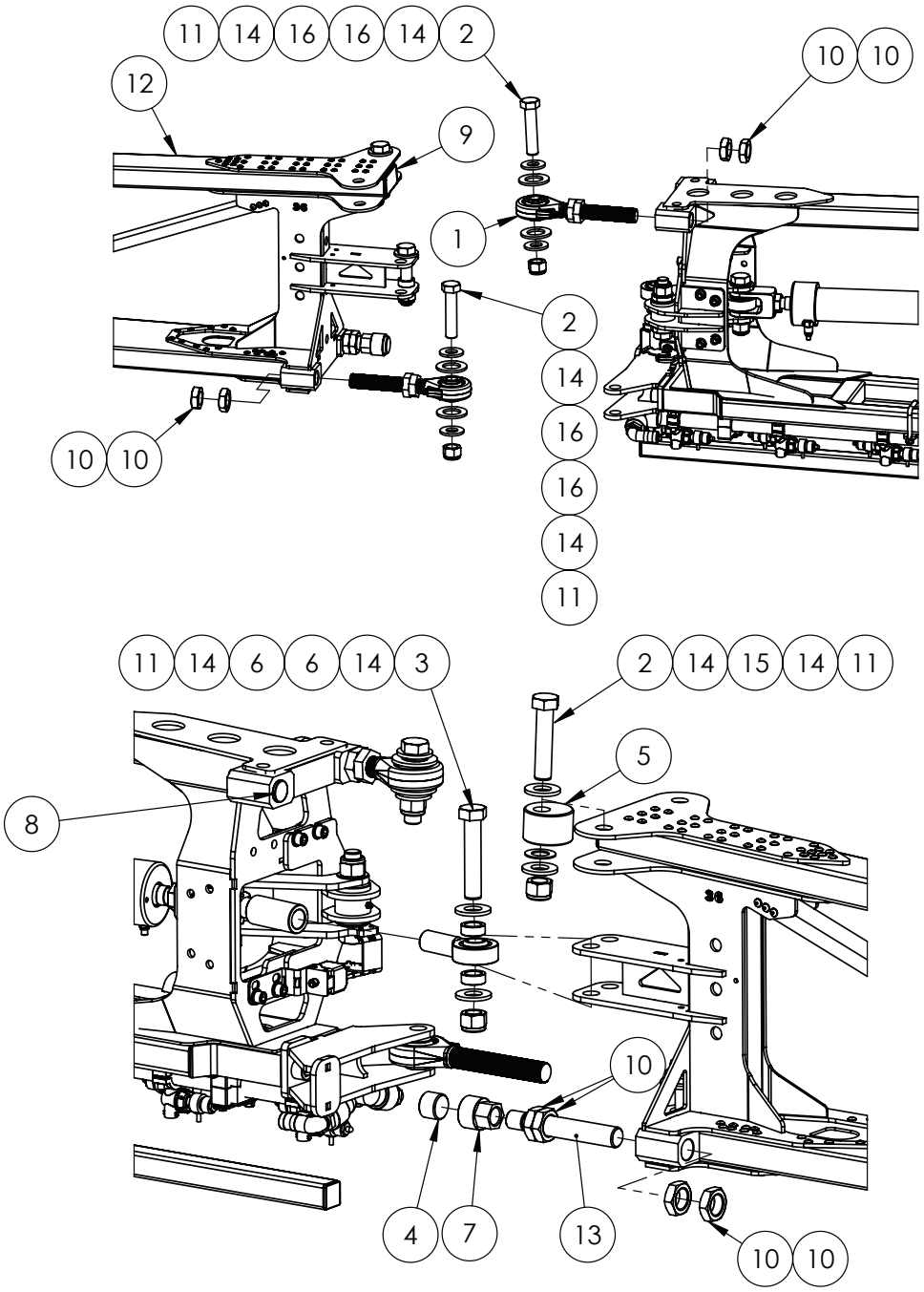

IF DESCRIPTION PREFIX IS ASSEMBLY DRAWING ONLY OR PRODUCTION DRAWING ONLY THE ITEM IS NOT FOR SALE			
ITEM	PART NUMBER	DESCRIPTION	QTY
1	GA4909310	ASSEMBLY DRAWING ONLY, ROSE END BEARING, FORGED	2
2	GA5006149	BOLT 1" UNC X 4 1/2" GR8 ZP	3
3	GA5006031	BOLT 1" UNC X 5" GR8 ZP	1
4	GA4551330	BOOM STOPPER, DIAMETER 40mm X 30mm LONG, URETHANE, RED	1
5	GA4572500	BOOM FOLD ADJUSTER BUSH MY13	1
6	GA4551160	BUSH, 25.7mm ID X 37mm OD X 14.5mm LONG, CRUSH TUBE ZP	2
7	GA4551100	BUSH, BOOM STOPPER BOLT	1
8	GA5078635	END CAP, PLASTIC, BLACK, INSERT, ROUND. 33.7mm, 1 - 3mm WALL	2
9	GA5078601	END CAP, PLASTIC, BLACK, INSERT, RHS. 100 X 50, 2.0 - 4.0mm WALL	1
10	GA5010963	NUT 1 1/4" UNF 12 TPI LOCK ZP	8
11	GA5012439	NUT 1" NYLOC UNC ZP	4
12	GA4605077	OUTER BOOM, 36M, TRITECH RIVX	1
13	GA4550645	THREADED BOOM PIVOT ADJUSTER, 1 1/4" UNF AND M28 THREADS, 48m BOOM	1
14	GA5017659	WASHER 1" FLAT ZP HD	8
15	GA5001893	WASHER 1" X 1 7/8" FLAT ZP	1
16	GA4407825	WASHER, PLASTIC DISC, ROSE END SPACER, TRITECH MY20	4
GA6101972-03 GOLDACRES		PRODCUTION DRAWING ONLY, BOOM WING ASSEMBLY, 36M LH, RIVX	REV 00

Boom Wing, RH, Aluminium Outer Mounting, RIVX

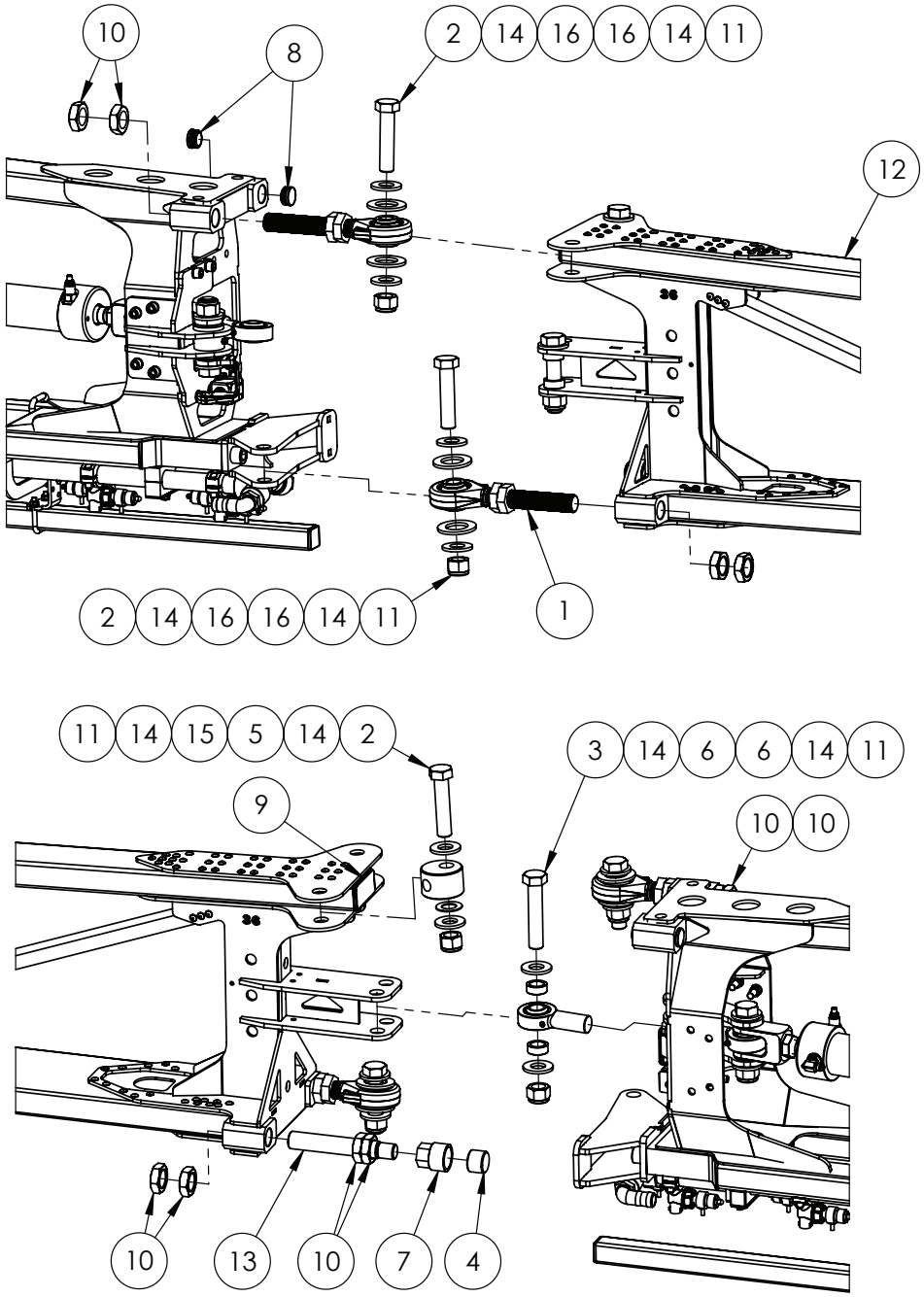

IF DESCRIPTION PREFIX IS ASSEMBLY DRAWING ONLY OR PRODUCTION DRAWING ONLY THE ITEM IS NOT FOR SALE			
ITEM	PART NUMBER	DESCRIPTION	QTY
1	GA4909310	ASSEMBLY DRAWING ONLY, ROSE END BEARING, FORGED	2
2	GA5006149	BOLT 1" UNC X 4 1/2" GR8 ZP	3
3	GA5006031	BOLT 1" UNC X 5" GR8 ZP	1
4	GA4551330	BOOM STOPPER, DIAMETER 40mm X 30mm LONG, URETHANE, RED	1
5	GA4572500	BOOM FOLD ADJUSTER BUSH MY13	1
6	GA4551160	BUSH, 25.7mm ID X 37mm OD X 14.5mm LONG, CRUSH TUBE ZP	2
7	GA4551100	BUSH, BOOM STOPPER BOLT	1
8	GA5078635	END CAP, PLASTIC, BLACK, INSERT, ROUND. 33.7mm, 1 - 3mm WALL	2
9	GA5078601	END CAP, PLASTIC, BLACK, INSERT, RHS. 100 X 50, 2.0 - 4.0mm WALL	1
10	GA5010963	NUT 1 1/4" UNF 12 TPI LOCK ZP	8
11	GA5012439	NUT 1" NYLOC UNC ZP	4
12	GA4605077	OUTER BOOM, 36M, TRITECH RIVX	1
13	GA4550645	THREADED BOOM PIVOT ADJUSTER, 1 1/4" UNF AND M28 THREADS, 48m BOOM	1
14	GA5017659	WASHER 1" FLAT ZP HD	8
15	GA5001893	WASHER 1" X 1 7/8" FLAT ZP	1
16	GA4407825	WASHER, PLASTIC DISC, ROSE END SPACER, TRITECH MY20	4
GA6101976-03 GOLDACRES		ASSEMBLY DRAWING ONLY, OUTER BOOM ATTACHMENT, 36M RH, RIVX SERIES 3	REV 00

Boom Wing, LH, Recirculation Poly Mounting, Aluminium Outer, RIVX

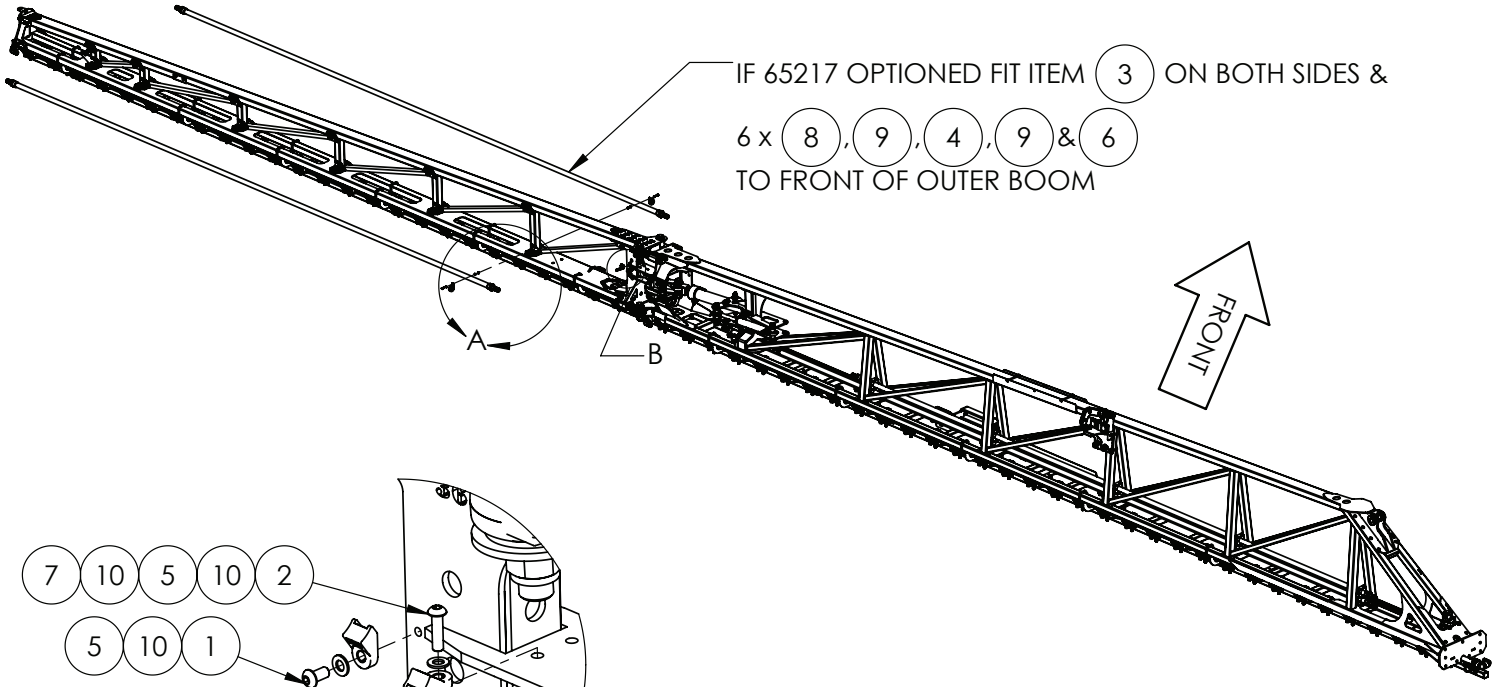

DETAIL B

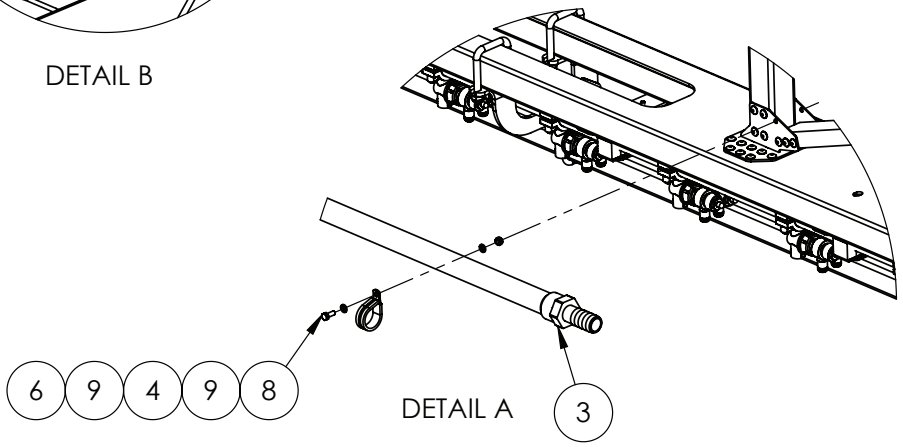

DETAIL A

IF DESCRIPTION PREFIX IS ASSEMBLY DRAWING ONLY OR PRODUCTION DRAWING ONLY THE ITEM IS NOT FOR SALE			
ITEM	PART NUMBER	DESCRIPTION	QTY
1	GA5004696	BHCS M8 X 16 SS A2-70	1
2	GA5050680	BHCS M8 X 30 SS A2-70	1
3	GA4950635	BOOM POLY, 1IN 30M, INNER SECTION, BOOM RECIRCULATION, RIVX	2
4	GA5048090	CLAMP P 35mm 56487	12
5	GA5026172	HARNESS CLIP, 36mm X 19mm M8 HOLE HI-IMPACT UV BK	2
6	GA5004429	NUT M6 NYLOC SS	12
7	GA5052590	NUT M8 NYLOC SS	1
8	GA5004041	SET SCREW M6 X 16 GR8.8 ZP	12
9	GA5004437	WASHER M6 FLAT SS HD	24
10	GA5003643	WASHER M8 FLAT SS HD	3
GA6101972-04 GOLDACRES		PRODUCTION DRAWING ONLY, BOOM OUTER ASSEMBLY, 36M LH, RIVX	REV 00

Boom Wing, RH, Recirculation Poly Mounting, Aluminium Outer, RIVX

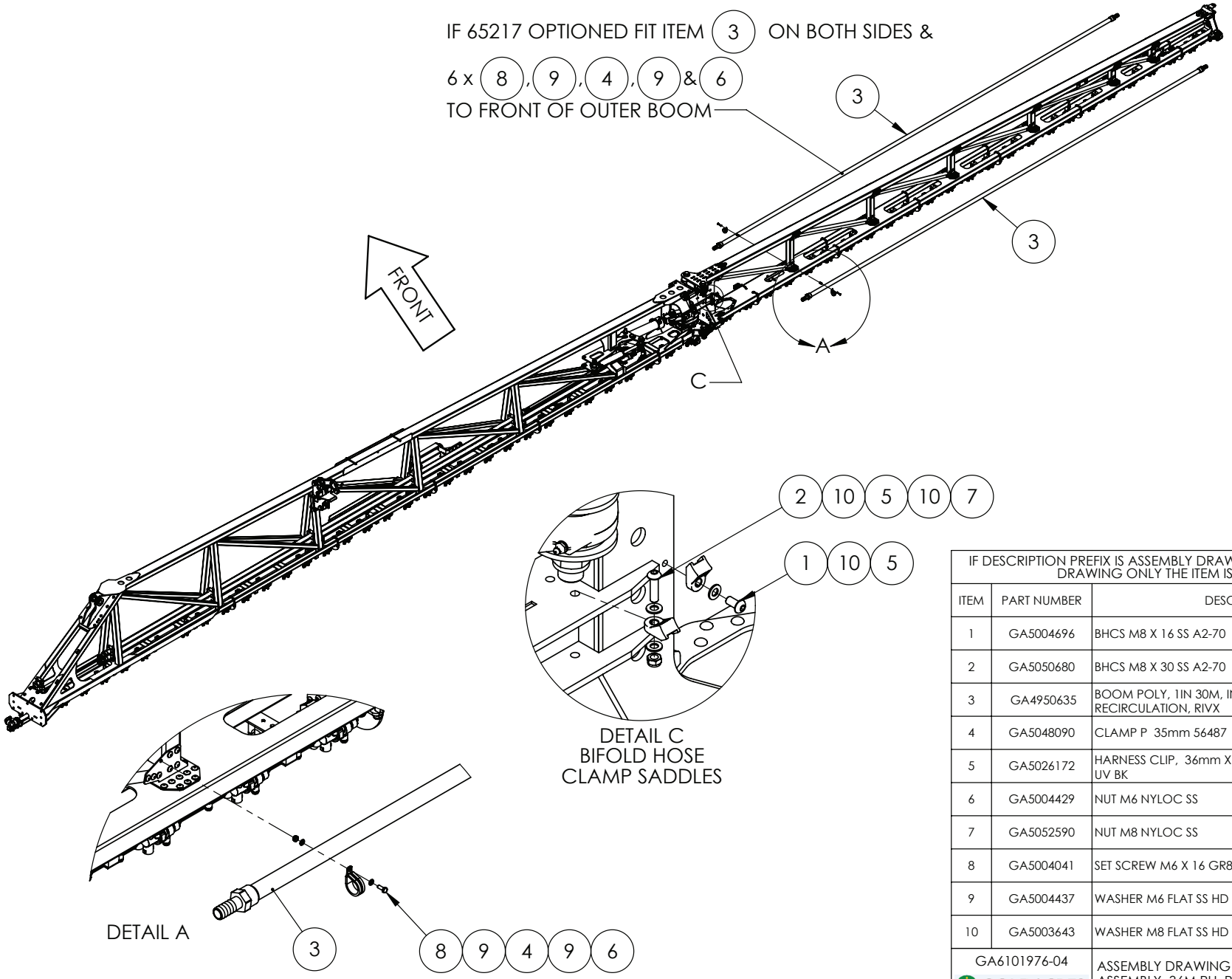

IF DESCRIPTION PREFIX IS ASSEMBLY DRAWING ONLY OR PRODUCTION DRAWING ONLY THE ITEM IS NOT FOR SALE			
ITEM	PART NUMBER	DESCRIPTION	QTY
1	GA5004696	BHCS M8 X 16 SS A2-70	1
2	GA5050680	BHCS M8 X 30 SS A2-70	1
3	GA4950635	BOOM POLY, 1IN 30M, INNER SECTION, BOOM RECIRCULATION, RIVX	2
4	GA5048090	CLAMP P 35mm 56487	12
5	GA5026172	HARNESS CLIP, 36mm X 19mm M8 HOLE HI-IMPACT UV BK	2
6	GA5004429	NUT M6 NYLOC SS	12
7	GA5052590	NUT M8 NYLOC SS	1
8	GA5004041	SET SCREW M6 X 16 GR8.8 ZP	12
9	GA5004437	WASHER M6 FLAT SS HD	24
10	GA5003643	WASHER M8 FLAT SS HD	3
GA6101976-04 GOLDACRES		ASSEMBLY DRAWING ONLY, BOOM OUTER ASSEMBLY, 36M RH, RIVX SERIES 3	REV 00

Boom Wing, LH, Plumbing Line Mounting, Single & Dual Line, RIVX

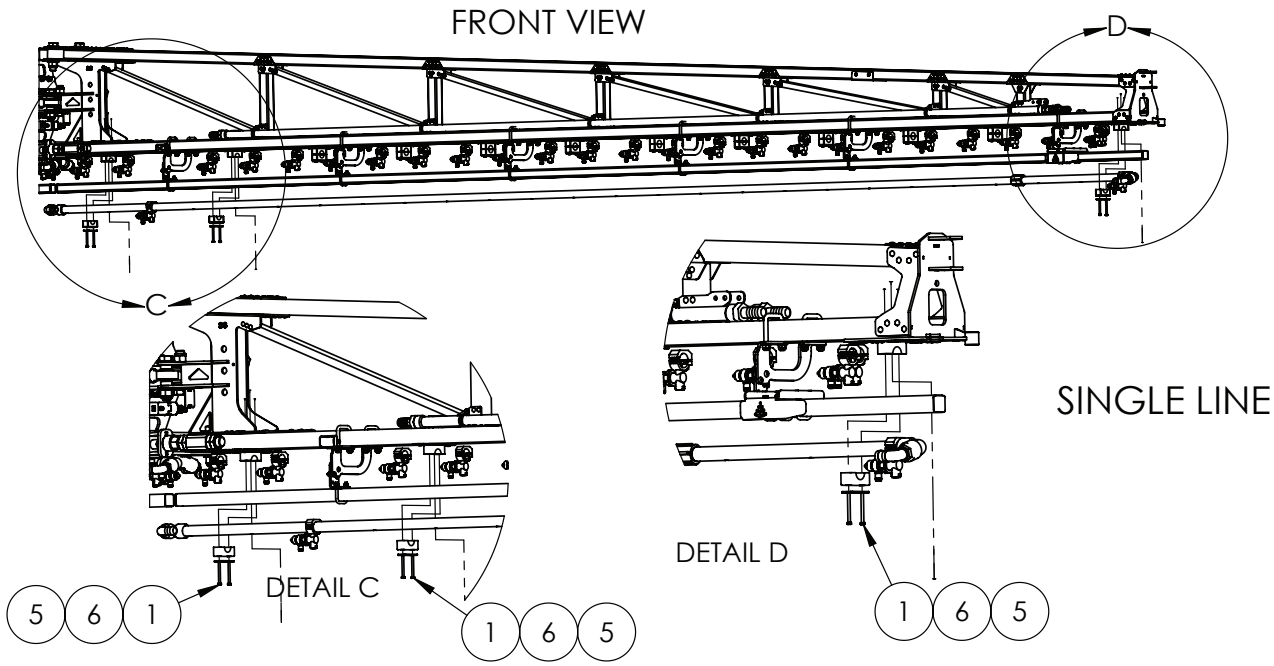

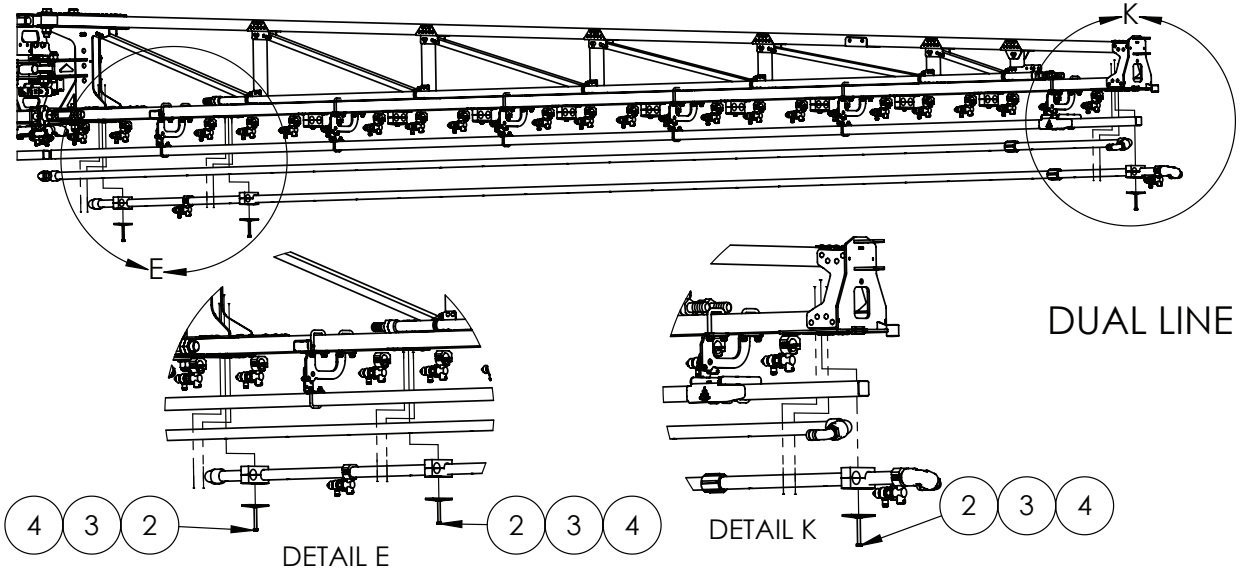

IF 65215 OR 65216 OPTIONED FIT ITEMS (1), (6) & (5)

IF 65217 OPTIONED FIT ITEMS (2), (3) & (4)

IF DESCRIPTION PREFIX IS ASSEMBLY DRAWING ONLY OR PRODUCTION DRAWING ONLY THE ITEM IS NOT FOR SALE			
ITEM	PART NUMBER	DESCRIPTION	QTY
1	GA5004105	BOLT M6 X 70 SS A2-70	24
2	GA5004737	BOLT M8 X 70 SS A2-70	12
3	GA5025540	COVER PLATE, RCD-33.7	12
4	GA5025535	JAW CLAMPS, PAIR, RCD-33.7	12
5	GA3500699	MOUNTING CLAMP, SINGLE TYPE, JAW, PAIR, GROUP 5, 33.7mm, RCS-33.5J	12
6	GA5078075	MOUNTING CLAMP, SINGLE TYPE, PLATE, TOP, GROUP 5, RCS-5PT	12
GA6101972-04 GOLDACRES		PRODUCTION DRAWING ONLY, BOOM OUTER ASSEMBLY, 36M LH, RIVX	REV 00

Boom Wing, RH, Plumbing Line Mounting, Single & Dual Line, RIVX

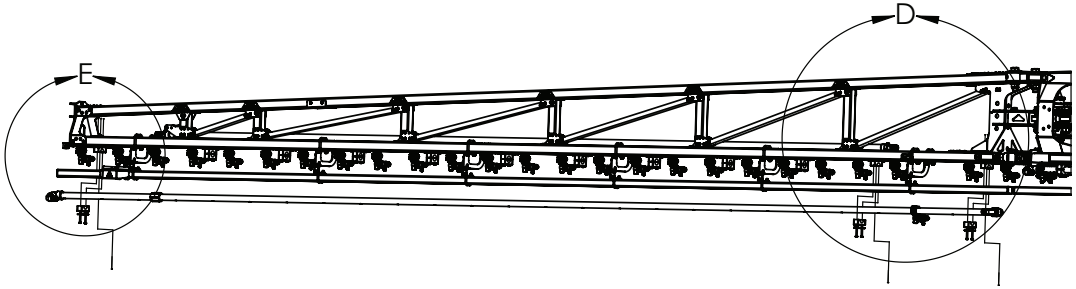

SINGLE LINE

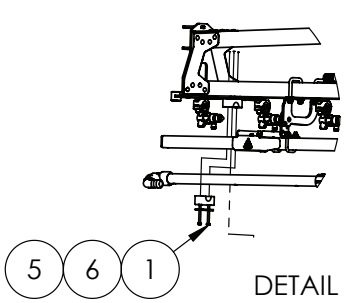

DETAIL E

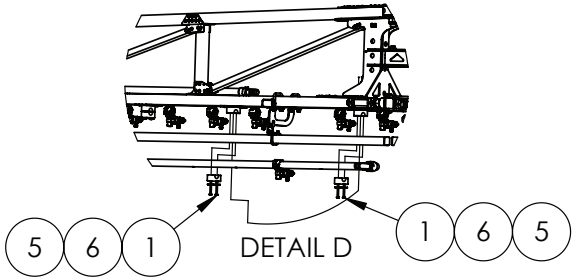

DETAIL D

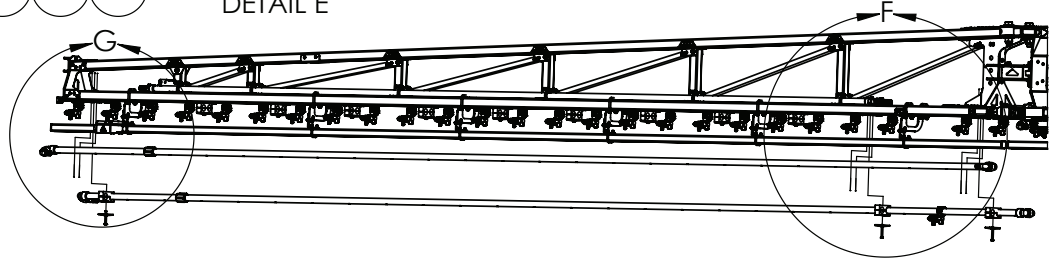

DUAL LINE

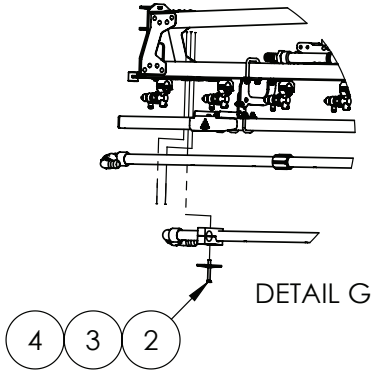

DETAIL G

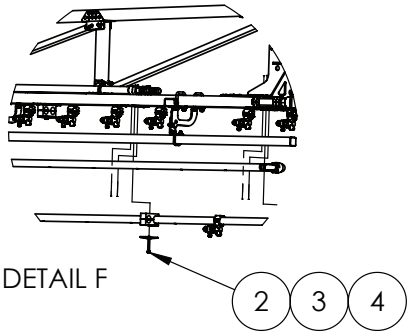

DETAIL F

IF 65215 OR 65216 OPTIONED FIT ITEMS (1), (1), (6), (5),

IF 65217 OPTIONED FIT ITEMS (2), (3), (4) & (2)

IF DESCRIPTION PREFIX IS ASSEMBLY DRAWING ONLY OR PRODUCTION DRAWING ONLY THE ITEM IS NOT FOR SALE			
ITEM	PART NUMBER	DESCRIPTION	QTY
1	GA5004105	BOLT M6 X 70 SS A2-70	24
2	GA5004737	BOLT M8 X 70 SS A2-70	12
3	GA5025540	COVER PLATE, RCD-33.7	12
4	GA5025535	JAW CLAMPS, PAIR, RCD-33.7	12
5	GA3500699	MOUNTING CLAMP, SINGLE TYPE, JAW, PAIR, GROUP 5, 33.7mm, RCS-33.5J	12
6	GA5078075	MOUNTING CLAMP, SINGLE TYPE, PLATE, TOP, GROUP 5, RCS-5PT	12
GA6101976-04 GOLDACRES		ASSEMBLY DRAWING ONLY, BOOM OUTER ASSEMBLY, 36M RH, RIVX SERIES 3	REV 00

Boom Wing, LH Outer, XRT Sensor & Nozzle Guard Bracket Mounting, RIVX

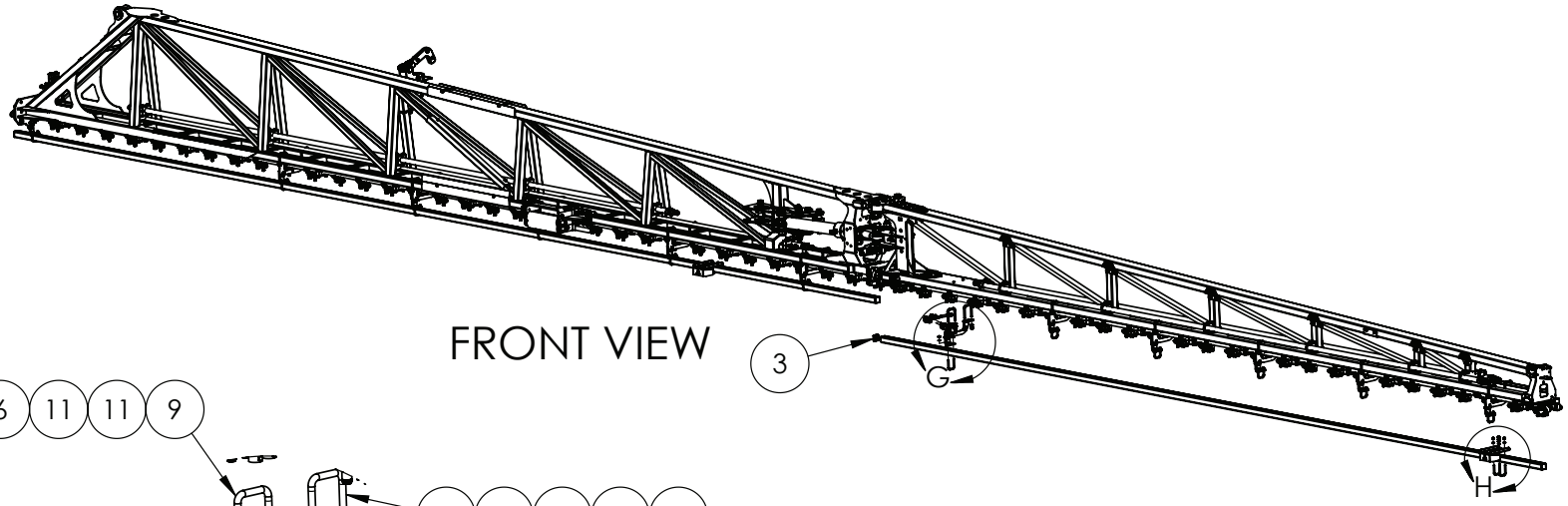

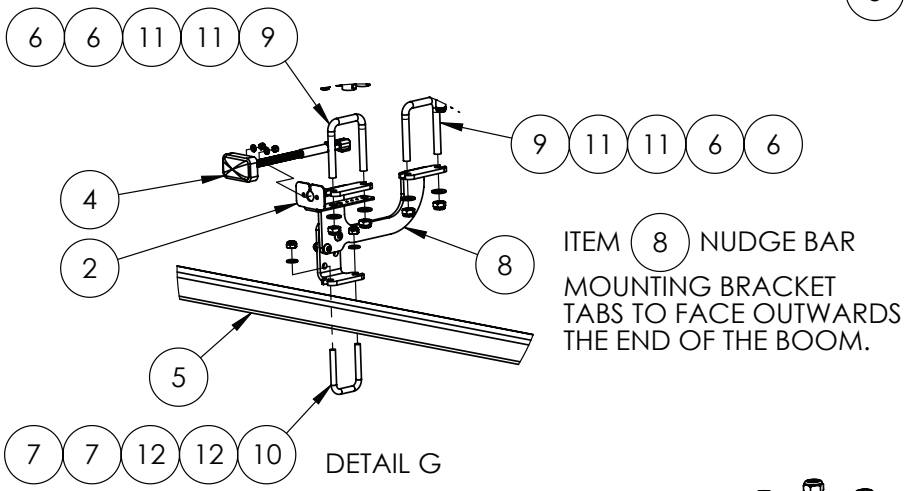

ITEM (8) NUDGE BAR

MOUNTING BRACKET TABS TO FACE OUTWARDS THE END OF THE BOOM.

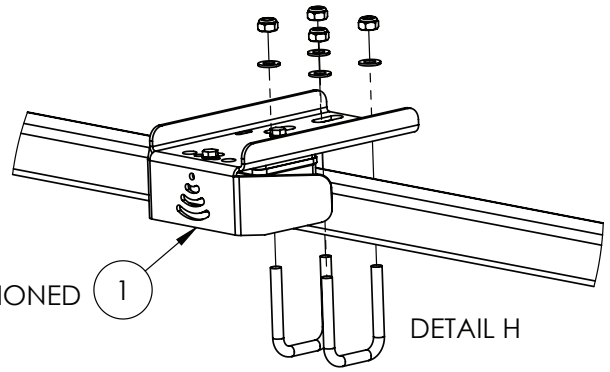

OPTION 30074 - XRT AUTO HEIGHT CONTROLLER WITH 5 SENSORS

IF DESCRIPTION PREFIX IS ASSEMBLY DRAWING ONLY OR PRODUCTION DRAWING ONLY THE ITEM IS NOT FOR SALE			
ITEM	PART NUMBER	DESCRIPTION	QTY.
1	GA4912625	ASSEMBLY DRAWING ONLY, BRACKET, SENSOR, RAVEN XRT 107-0235-001	1
2	GA4000597	CLEARANCE LIGHT MOUNTING BRACKET SUIT BOOM	1
3	GA5002963	INSERT 38X38MM CAP	2
4	GA3000267	LIGHT, LED, ORANGE, CLEARANCE, DEUTSCH CONNECTOR	1
5	GA4702475	NUDGE BAR, 36M OUTER, RIVX	1
6	GA5051445	NUT M10 NYLOC SS	24
7	GA5052590	NUT M8 NYLOC SS	12
8	GA4953940	PRODUCTION DRAWING ONLY, NOZZLE GUARD MOUNTING, RIVX BOOM, OUTER	6
9	GA5053645	U BOLT SQUARE TOP M10 X 52 X 75	12
10	GA0500084	U BOLT SQUARE TOP M8 X 42 X 65, 304 SS	6
11	GA5000117	WASHER M10 FLAT SS HD	24
12	GA5003643	WASHER M8 FLAT SS HD	12
GA6101972-04 GOLDACRES		PRODUCTION DRAWING ONLY, BOOM OUTER ASSEMBLY, 36M LH, RIVX	REV 00

Boom Wing, Outer, XRT Sensor & Nudge Bar Bracket Mounting, RIVX

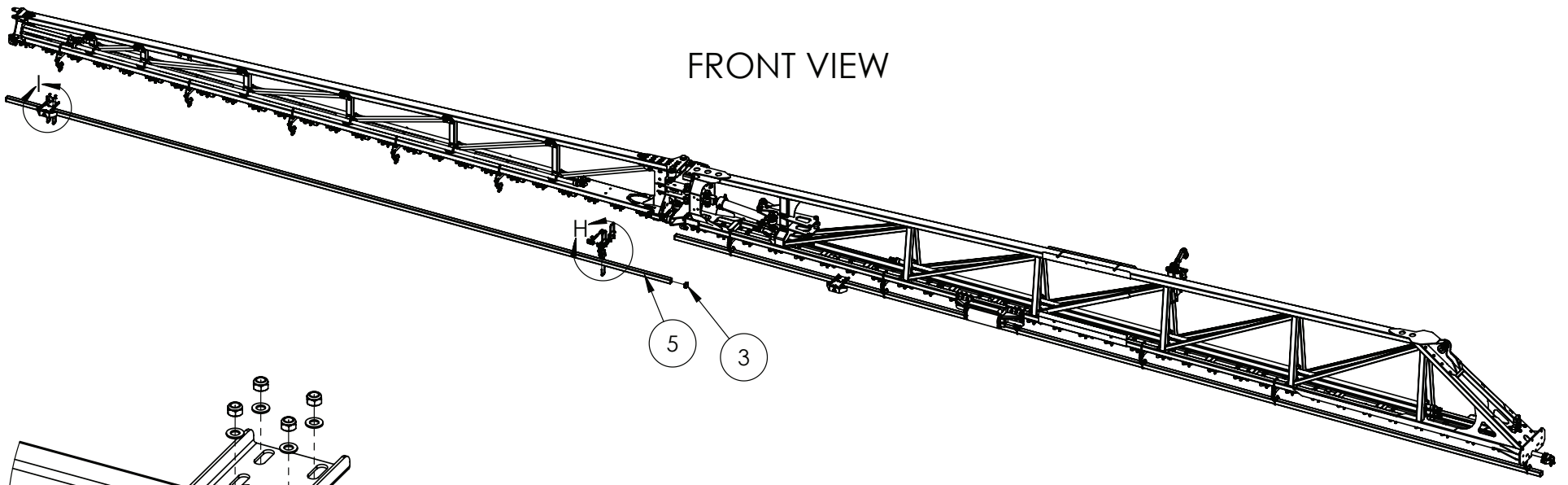

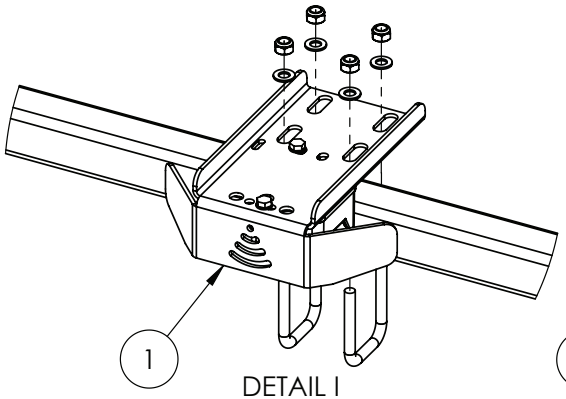

FIT ITEM (1) IF 30074 OPTIONED

ITEM (8) NUDGE BAR

MOUNTING BRACKET TABS TO FACE INWARDS TOWARDS THE CENTRE.

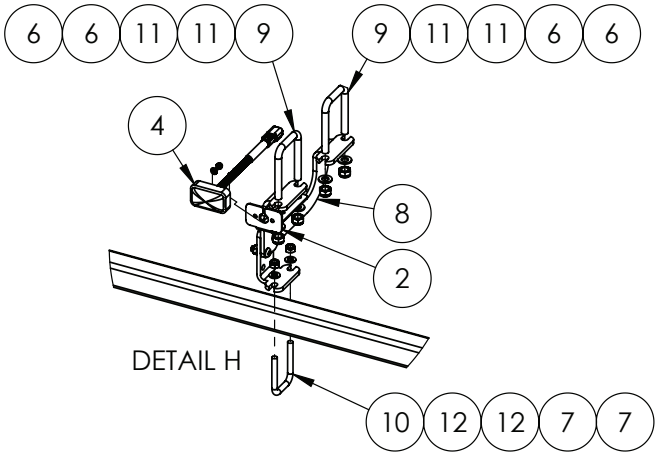

IF DESCRIPTION PREFIX IS ASSEMBLY DRAWING ONLY OR PRODUCTION DRAWING ONLY THE ITEM IS NOT FOR SALE			
ITEM	PART NUMBER	DESCRIPTION	QTY
1	GA4912625	ASSEMBLY DRAWING ONLY, BRACKET, SENSOR, RAVEN XRT 107-0235-001	1
2	GA4000597	CLEARANCE LIGHT MOUNTING BRACKET SUIT BOOM	1
3	GA5002963	INSERT 38X38MM CAP	2
4	GA3000267	LIGHT, LED, ORANGE, CLEARANCE, DEUTSCH CONNECTOR	1
5	GA4702475	NUDGE BAR, 36M OUTER, RIVX	1
6	GA5051445	NUT M10 NYLOC SS	24
7	GA5052590	NUT M8 NYLOC SS	12
8	GA4953940	PRODUCTION DRAWING ONLY, NOZZLE GUARD MOUNTING, RIVX BOOM, OUTER	6
9	GA5053645	U BOLT SQUARE TOP M10 X 52 X 75	12
10	GA0500084	U BOLT SQUARE TOP M8 X 42 X 65, 304 SS	6
11	GA5000117	WASHER M10 FLAT SS HD	24
12	GA5003643	WASHER M8 FLAT SS HD	12
GA6101976-04 GOLDACRES		ASSEMBLY DRAWING ONLY, BOOM OUTER ASSEMBLY, 36M RH, RIVX SERIES 3	REV 00

OPTION 30074 - XRT AUTO HEIGHT CONTROLLER WITH 5 SENSORS

Breakaway, Mounting Assembly, LH, RIVX

FRONT VIEW

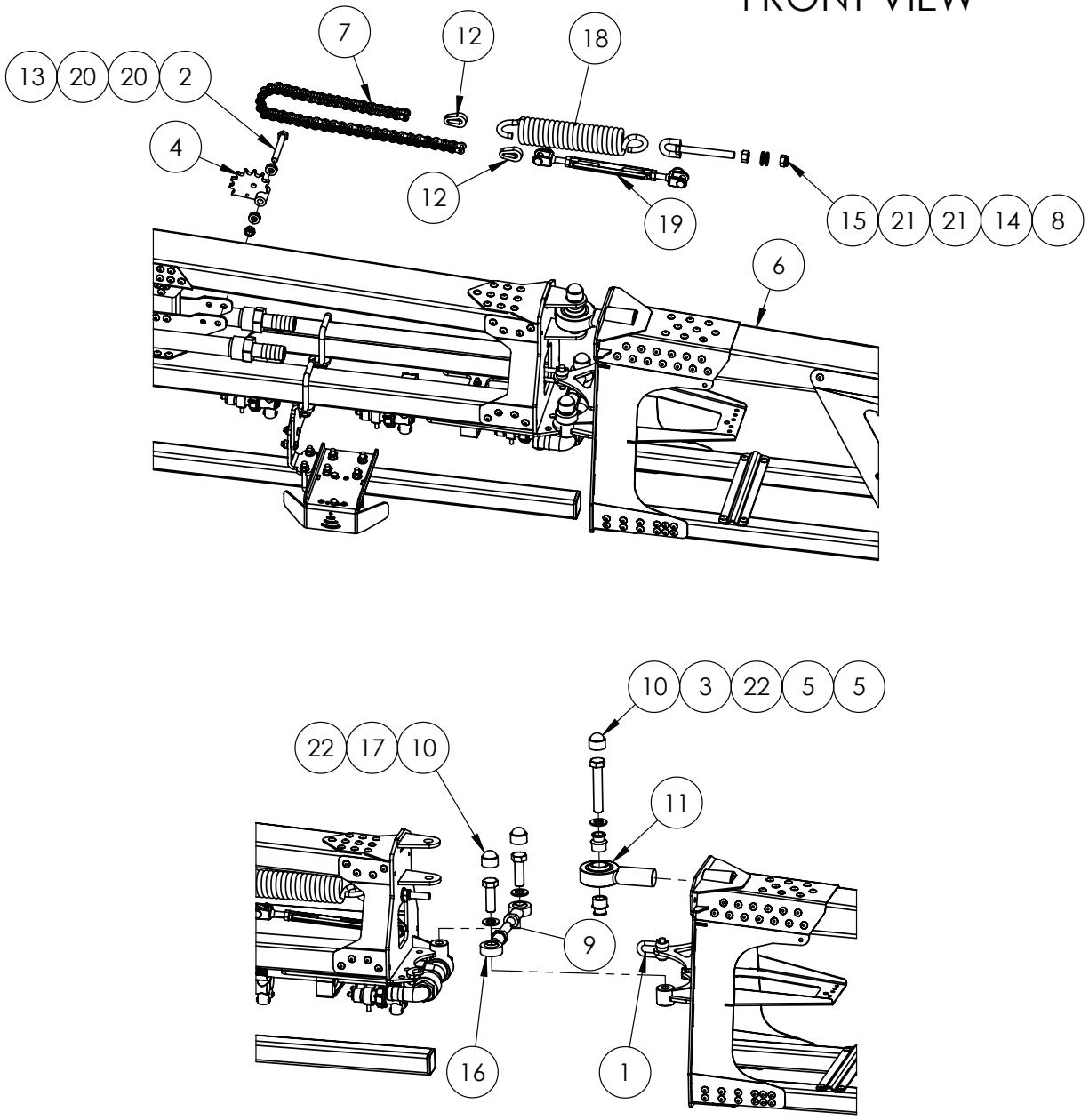

IF DESCRIPTION PREFIX IS ASSEMBLY DRAWING ONLY OR PRODUCTION DRAWING ONLY THE ITEM IS NOT FOR SALE			
ITEM	PART NUMBER	DESCRIPTION	QTY
1	GA5071060	10mm UTILITY CLEVIS 24CST002	1
2	GA5006073	BOLT M10 X 75 GR8.8 ZP	1
3	GA5011297	BOLT M16 X 90 GR8.8 ZP	1
4	GA4659800	BREAK AWAY CENTRE PIVOT FAB ASSEM	1
5	GA4552225	BREAKAWAY ROSE END SPACER BUSH 3D 2.0	2
6	GA4951560	BREAKAWAY TIP ASSEMBLY 2.3M, BARE, RIVX, MY22	1
7	GA5068985	CHAIN, 5/8", 41 PITCH BREAKAWAY HINGE	1
8	GA5075150	EYE BOLT 12mm X 100mm SHORT	1
9	GA5071105	GRUB SCREW M16 X 50	1
10	GA5075080	HEX NUT PROTECTION CAP SUIT M16 BLACK	3
11	GA5070530	LARGE ROSE END 1" X 1 1/4" UNF BB074-VM16	1
12	GA4505695	LINK PLATE CHAIN END	2
13	GA5000141	NUT M10 NYLOC ZP	1
14	GA5000559	NUT M12 HEX ZP	1
15	GA5012461	NUT M12 NYLOC ZP	1
16	GA5014469	ROD END FEMALE 16mm	2
17	GA5000933	SET SCREW M16 X 50 GR8.8 ZP	2
18	GA5025170	SPRING, TENSION, 50 OD X 260 LONG X 9mm, BREAKAWAY, MY20	1
19	GA5070505	TURNBUCKLE, S/S 10.mm JAW/JAW	1
20	GA5000117	WASHER M10 FLAT SS HD	4
21	GA5000577	WASHER M12 FLAT SS HD	2
22	GA5001043	WASHER M16 FLAT SS HD	3
GA6101972-05 GOLDACRES		PRODUCTION DRAWING ONLY, BOOM BREAKAWAY ATTACHMENT, 36M LH, RIVX	REV 00

Breakaway, Mounting Assembly, RH, RIVX,

FRONT VIEW

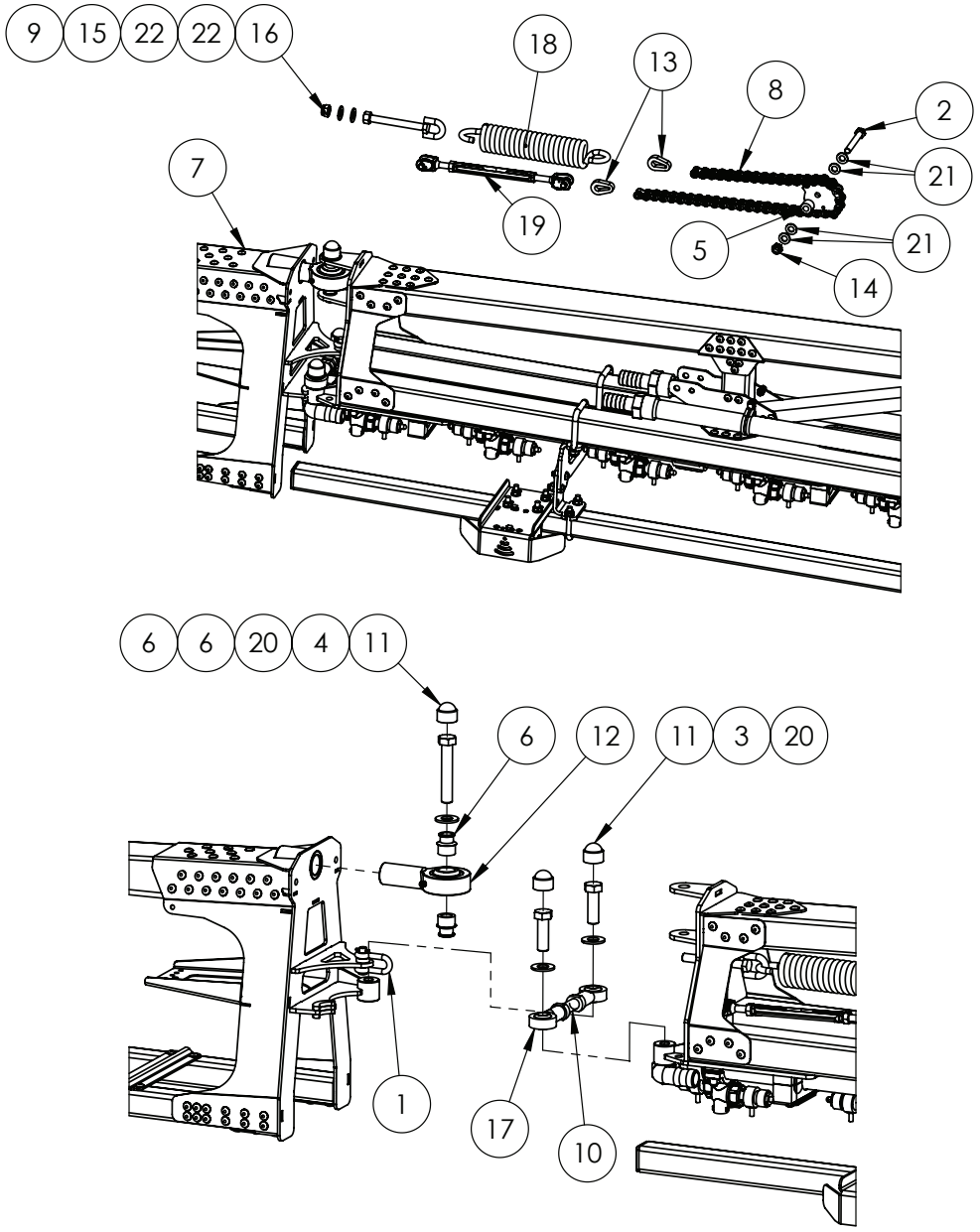

IF DESCRIPTION PREFIX IS ASSEMBLY DRAWING ONLY OR PRODUCTION DRAWING ONLY THE ITEM IS NOT FOR SALE			
ITEM	PART NUMBER	DESCRIPTION	QTY
1	GA5071060	10mm UTILITY CLEVIS 24CST002	1
2	GA5006073	BOLT M10 X 75 GR8.8 ZP	1
3	GA5000931	BOLT M16 X 50 GR8.8 ZP	2
4	GA5011297	BOLT M16 X 90 GR8.8 ZP	1
5	GA4659800	BREAK AWAY CENTRE PIVOT FAB ASSEM	1
6	GA4552225	BREAKAWAY ROSE END SPACER BUSH 3D 2.0	2
7	GA4951560	BREAKAWAY TIP ASSEMBLY 2.3M, BARE, RIVX, MY22	1
8	GA5068985	CHAIN, 5/8", 41 PITCH BREAKAWAY HINGE	1
9	GA5075150	EYE BOLT 12mm X 100mm SHORT	1
10	GA5071105	GRUB SCREW M16 X 50	1
11	GA5075080	HEX NUT PROTECTION CAP SUIT M16 BLACK	3
12	GA5070530	LARGE ROSE END 1" X 1 1/4" UNF BB074-VM16	1
13	GA4505695	LINK PLATE CHAIN END	2
14	GA5051445	NUT M10 NYLOC SS	1
15	GA5000559	NUT M12 HEX ZP	1
16	GA5012461	NUT M12 NYLOC ZP	1
17	GA5014469	ROD END FEMALE 16mm	2
18	GA5025170	SPRING, TENSION, 50 OD X 260 LONG X 9mm, BREAKAWAY, MY20	1
19	GA5070505	TURNBUCKLE, S/S 10.mm JAW/JAW	1
20	GA5001043	WASHER 16mm FLAT SS HD	3
21	GA5000117	WASHER M10 FLAT SS HD	4
22	GA5000577	WASHER M12 FLAT SS HD	2
GA6101976-05 GOLDACRES		PRODUCTION DRAWING ONLY, BOOM BREAKAWAY ATTACHMENT, 36M RH, RIVX	REV 00

Breakaway, LH, Poly Mounting, Single & Dual Line, RIVX

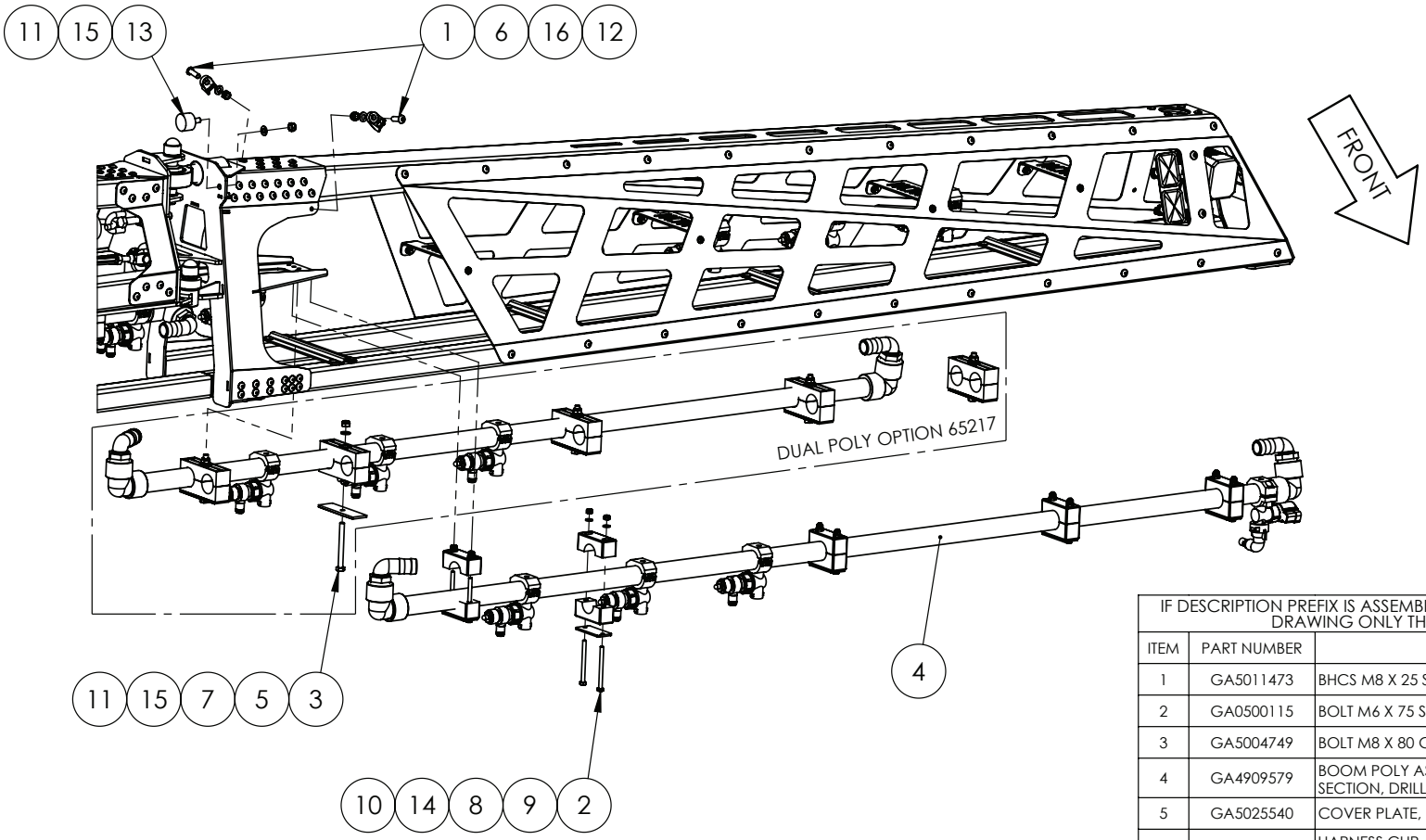

IF DESCRIPTION PREFIX IS ASSEMBLY DRAWING ONLY OR PRODUCTION DRAWING ONLY THE ITEM IS NOT FOR SALE			
ITEM	PART NUMBER	DESCRIPTION	QTY
1	GA5011473	BHCS M8 X 25 SS A2-70	2
2	GA0500115	BOLT M6 X 75 SS A2-70	10
3	GA5004749	BOLT M8 X 80 GR8.8 ZP	5
4	GA4909579	BOOM POLY ASSEMBLY. BARE, LH BREAKAWAY SECTION, DRILLED 250mm ,RIVX	1
5	GA5025540	COVER PLATE, RCD-33.7	5
6	GA5026172	HARNESS CLIP, 36mm X 19mm M8 HOLE HI-IMPACT UV BK	2
7	GA5025535	JAW CLAMPS, PAIR, RCD-33.7	5
8	GA3500699	MOUNTING CLAMP, SINGLE TYPE, JAW, PAIR, GROUP 5, 33.7mm, RCS-33.5J	5
9	GA5078075	MOUNTING CLAMP, SINGLE TYPE, PLATE, TOP, GROUP 5, RCS-5PT	5
10	GA5004429	NUT M6 NYLOC SS	10
11	GA5052590	NUT M8 NYLOC SS	7
12	GA5004917	NUT M8 NYLOC ZP	2
13	GA5014613	RUBBER BUFFER DIA 30 HT 20	2
14	GA5004437	WASHER M6 FLAT SS HD	10
15	GA5003643	WASHER M8 FLAT SS HD	7
16	GA5003651	WASHER M8 FLAT SS	2
GA6101972-06 GOLDACRES		PRODUCTION DRAWING ONLY, BOOM BREAKAWAY ASSEMBLY, 36M LH, RIVX	REV 00.B

FIT ITEMS:
3, 5, 7, 15 & 11
WITH OPTION 65217

Breakaway, RH, Poly Mounting, Single & Dual Line, RIVX

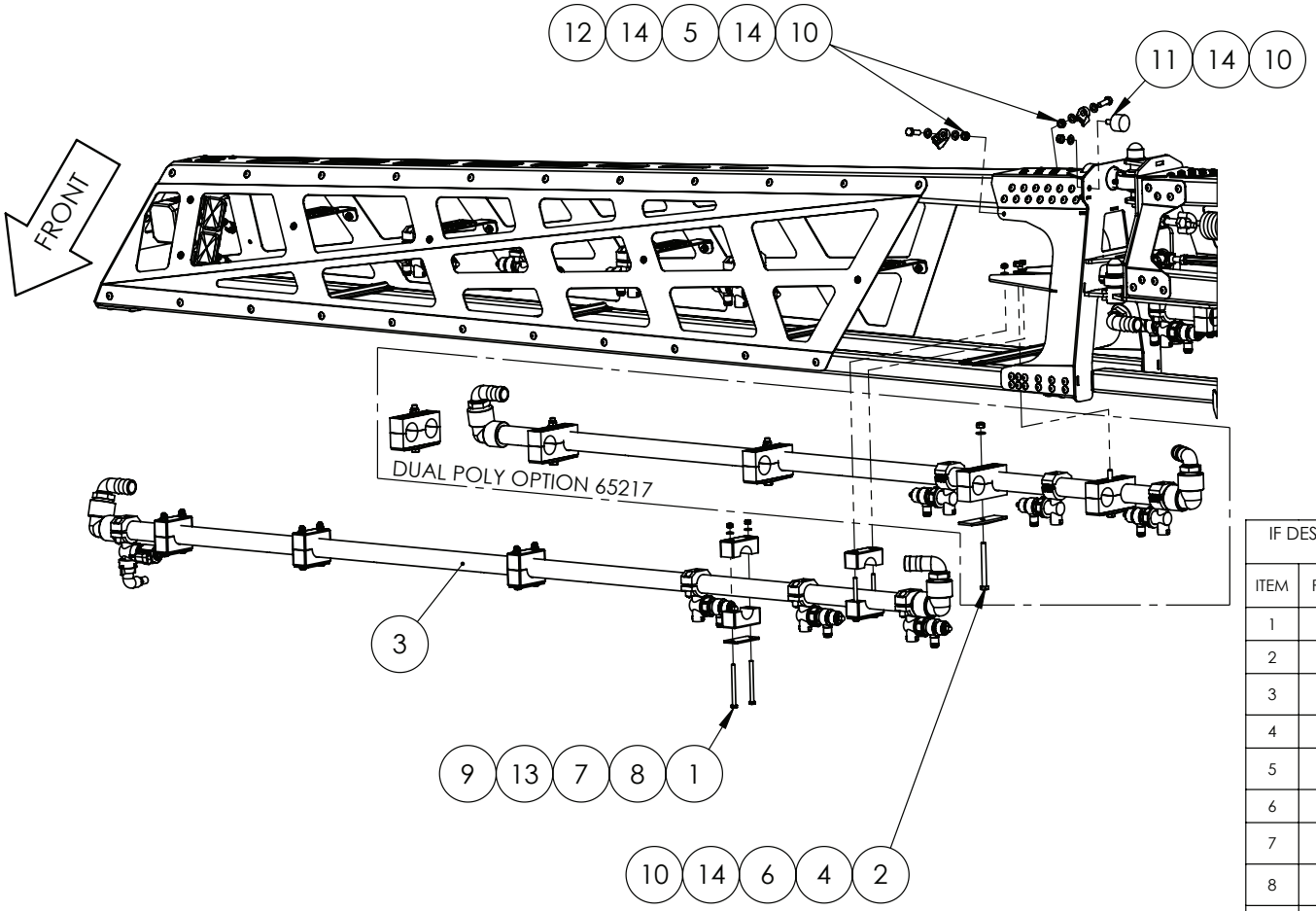

FIT ITEMS:
2, 4, 6, 12 & 9
WITH OPTION 65217

IF DESCRIPTION PREFIX IS ASSEMBLY DRAWING ONLY OR PRODUCTION DRAWING ONLY THE ITEM IS NOT FOR SALE			
ITEM	PART NUMBER	DESCRIPTION	QTY
1	GA0500115	BOLT M6 X 75 SS A2-70	10
2	GA5004749	BOLT M8 X 80 GR8.8 ZP	5
3	GA4909552	BOOM POLY ASSEMBLY. BARE, RH BREAKAWAY SECTION, DRILLED 250mm, RIVX	1
4	GA5025540	COVER PLATE, RCD-33.7	5
5	GA5026172	HARNESS CLIP, 36mm X 19mm M8 HOLE HI-IMPACT UV BK	2
6	GA5025535	JAW CLAMPS, PAIR, RCD-33.7	5
7	GA3500699	MOUNTING CLAMP, SINGLE TYPE, JAW, PAIR, GROUP 5, 33.7mm, RCS-33.5J	5
8	GA5078075	MOUNTING CLAMP, SINGLE TYPE, PLATE, TOP, GROUP 5, RCS-5PT	5
9	GA5004429	NUT M6 NYLOC SS	10
10	GA5052590	NUT M8 NYLOC SS	9
11	GA5014613	RUBBER BUFFER DIA 30 HT 20	2
12	GA5004711	SET SCREW M8 X 25 GR8.8 ZP	2
13	GA5004437	WASHER M6 FLAT SS HD	10
14	GA5003643	WASHER M8 FLAT SS HD	11
GA6101976-06 GOLDACRES		ASSEMBLY DRAWING ONLY, BOOM BREAKAWAY ASSEMBLY, 36M RH, RIVX SERIES 3	REV 00.B

Breakaway, LH Light Mounting, RIVX

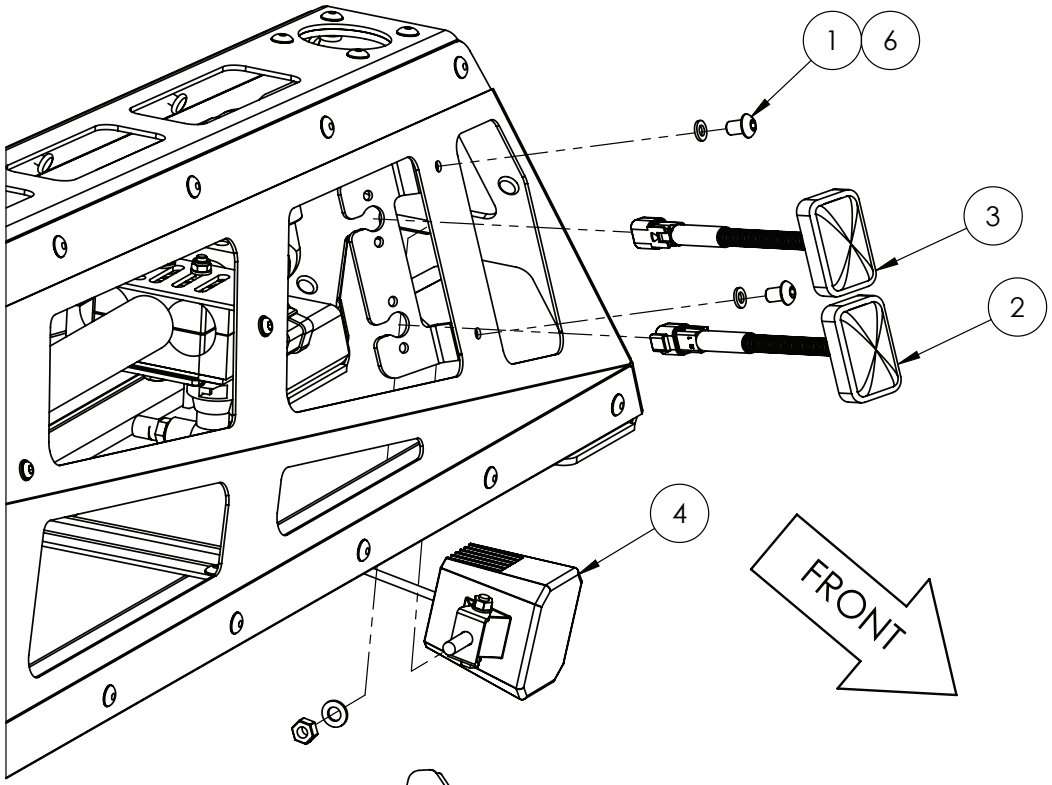

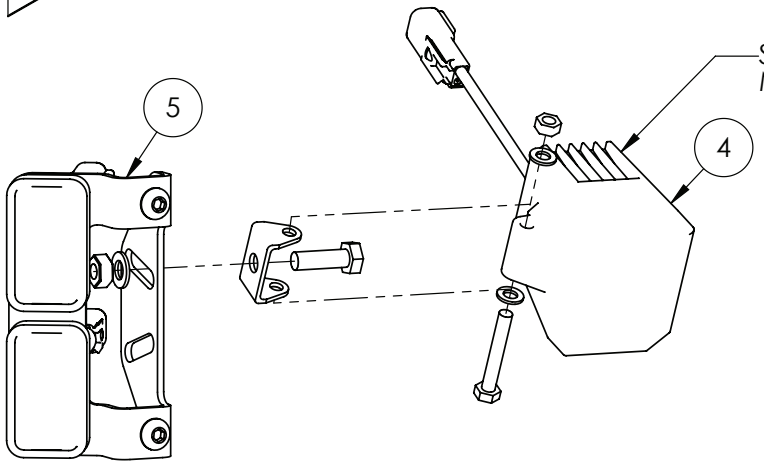

IF DESCRIPTION PREFIX IS ASSEMBLY DRAWING ONLY OR PRODUCTION DRAWING ONLY THE ITEM IS NOT FOR SALE			
ITEM	PART NUMBER	DESCRIPTION	QTY
1	GA5026272	BHCS M8 X 12 SS A2-69	2
2	GA3001268	LIGHT, LED, GREEN, FENCE, DEUTSCH CONNECTOR	1
3	GA3000267	LIGHT, LED, ORANGE, CLEARANCE, DEUTSCH CONNECTOR	1
4	GA3001119	LIGHT, LED, RED BEAM LINE, TIP INDICATOR WITH DEUTSCH CONNECTOR	1
5	GA4405610	PLATE, ALUMINIUM BREAKAWAY TIP, LED MOUNT, MY20	1
6	GA5004437	WASHER M6 FLAT SS HD	2
7	GA5026172	HARNESS CLIP, 36mm X 19mm M8 HOLE HI-IMPACT UV BK	2
GA6101972-06 GOLDACRES		PRODUCTION DRAWING ONLY, BOOM BREAKAWAY ASSEMBLY, 36M LH, RIVX	REV 00.B

Breakaway, RH Light Mounting, RIVX

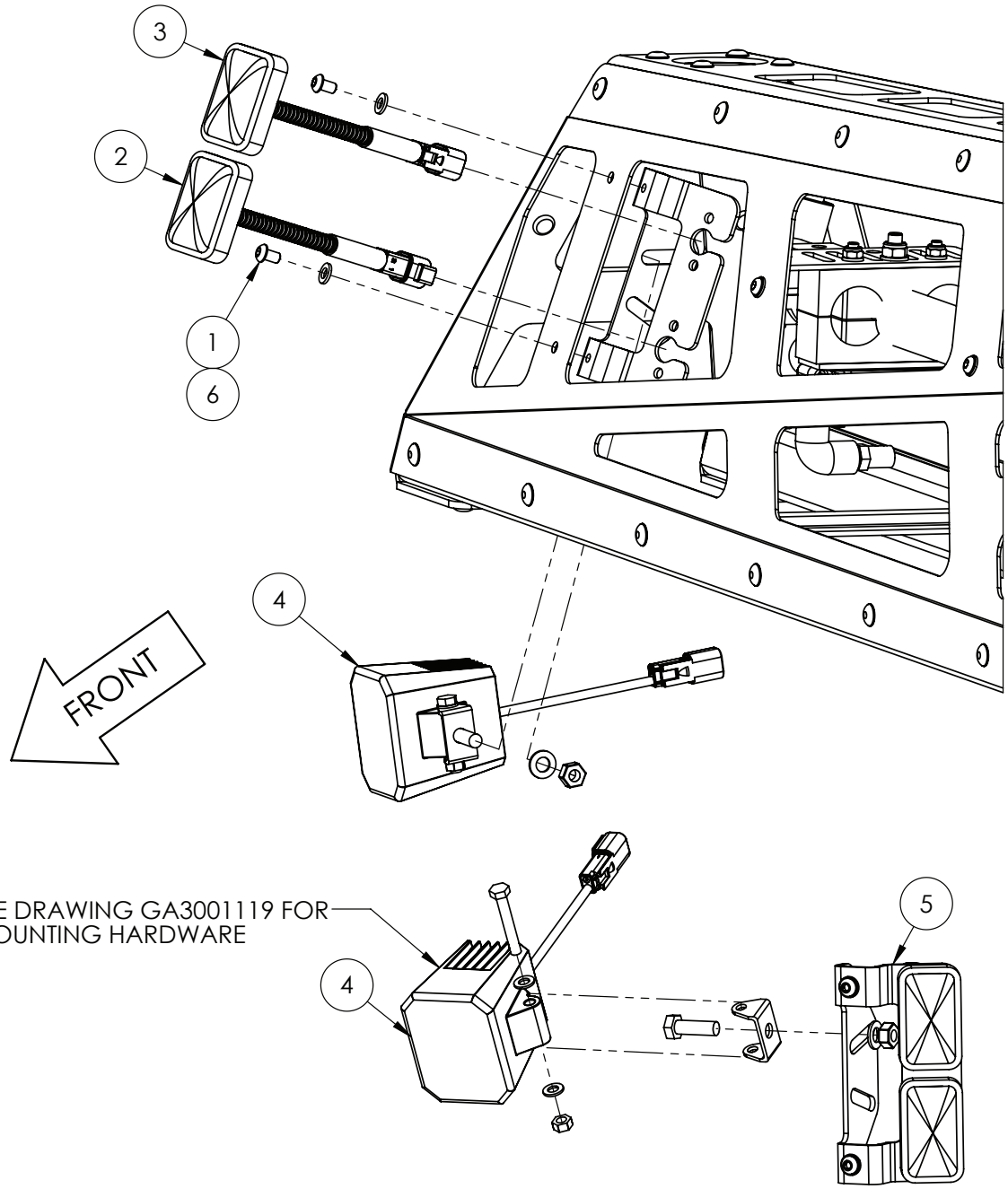

IF DESCRIPTION PREFIX IS ASSEMBLY DRAWING ONLY OR PRODUCTION DRAWING ONLY THE ITEM IS NOT FOR SALE			
ITEM	PART NUMBER	DESCRIPTION	QTY.
1	GA5004023	BHCS M6 X 10 SS A2-70	2
2	GA3001268	LIGHT, LED, GREEN, FENCE, DEUTSCH CONNECTOR	1
3	GA3000267	LIGHT, LED, ORANGE, CLEARANCE, DEUTSCH CONNECTOR	1
4	GA3001119	LIGHT, LED, RED BEAM LINE, TIP INDICATOR WITH DEUTSCH CONNECTOR	1
5	GA4405610	PLATE, ALUMINIUM BREAKAWAY TIP, LED MOUNT, MY20	1
6	GA5004437	WASHER M6 FLAT SS HD	2
7	GA5026172	HARNESS CLIP, 36mm X 19mm M8 HOLE HI-IMPACT UV BK	2
8	GA5004711	SET SCREW M8 X 25 GR8.8 ZP	2
9	GA5003643	WASHER M8 FLAT SS HD	4
10	GA5052590	NUT M8 NYLOC SS	2
GA6101976-06 GOLDACRES		ASSEMBLY DRAWING ONLY, BOOM BREAKAWAY ASSEMBLY, 36M RH, RIVX SERIES 3	REV 00.B

Breakaway, LH, Decals, RIVX

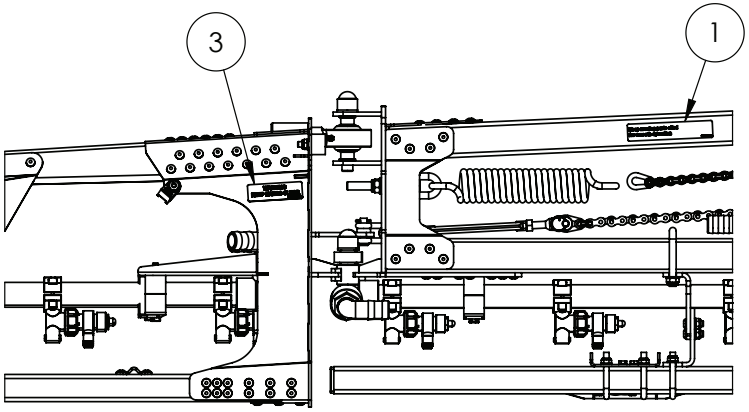

DETAIL A
OUTER BOOM TO BREAKAWAY
REAR VIEW

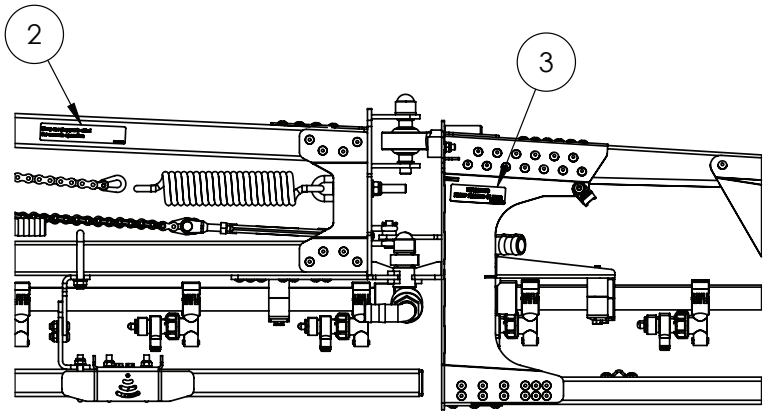

DETAIL B
OUTER BOOM TO BREAKAWAY
FRONT VIEW

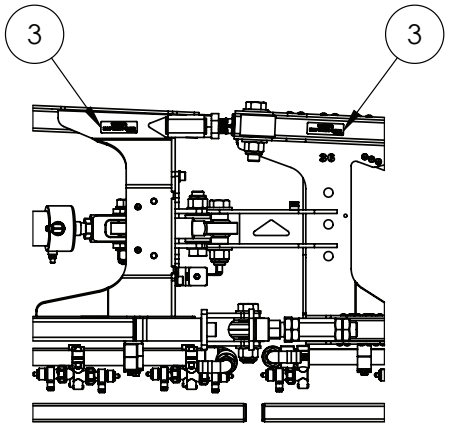

DETAIL C
INNER TO OUTER BOOM
FRONT VIEW

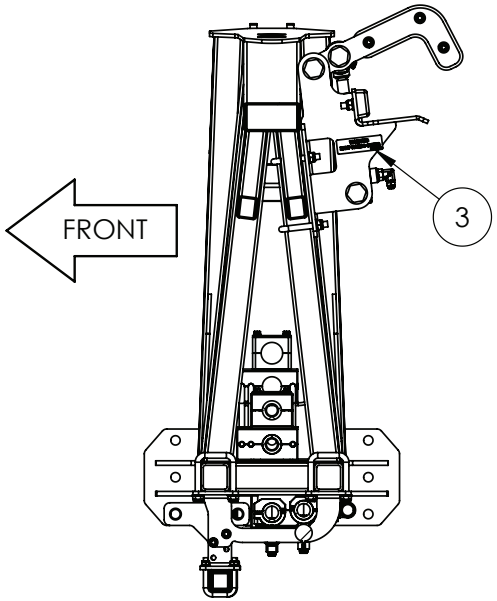

IF DESCRIPTION PREFIX IS ASSEMBLY DRAWING ONLY OR PRODUCTION DRAWING ONLY THE ITEM IS NOT FOR SALE			
ITEM	PART NUMBER	DESCRIPTION	QTY
1	GA8701199	DECAL, BREAKAWAY LUBRICATION, LH	1
2	GA8701200	DECAL, BREAKAWAY LUBRICATION, RH	1
3	GA8701128	DECAL, WARNING KEEP HANDS CLEAR	8
GA6101972-07 GOLDACRES		PRODUCTION DRAWING ONLY, BOOM DECAL AND NOZZLE ASSEMBLY, 36M LH, RIVX	REV 00

Breakaway, RH, Decals, RIVX

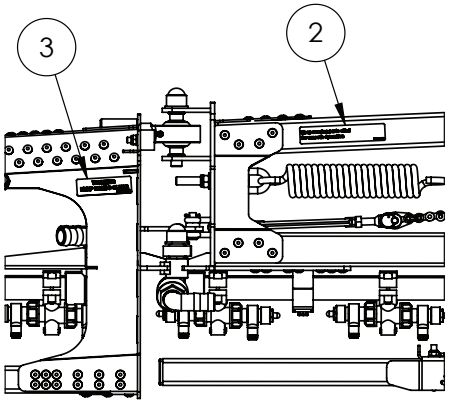

DETAIL A
OUTER BOOM TO BREAKAWAY
FRONT VIEW

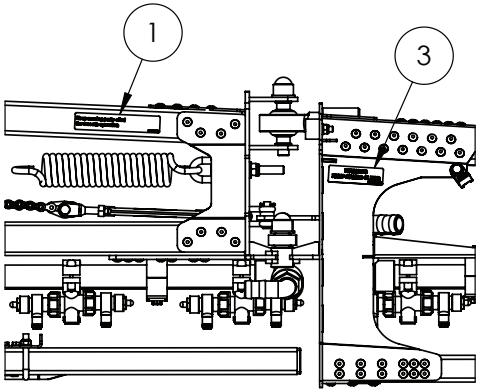

DETAIL B
OUTER BOOM TO BREAKAWAY
REAR VIEW

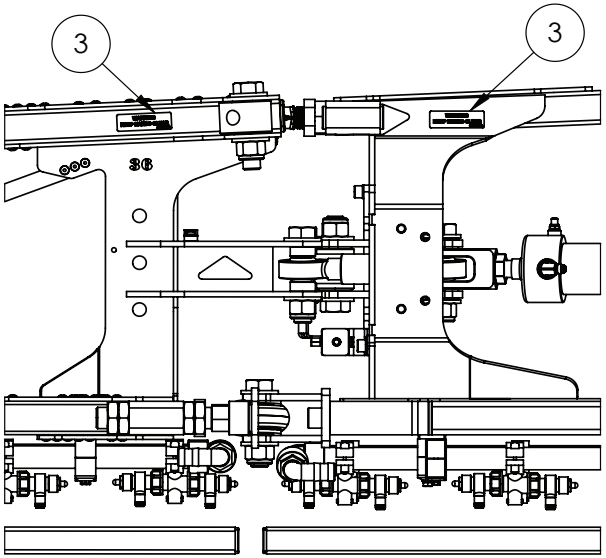

DETAIL C
INNER TO OUTER BOOM
FRONT VIEW

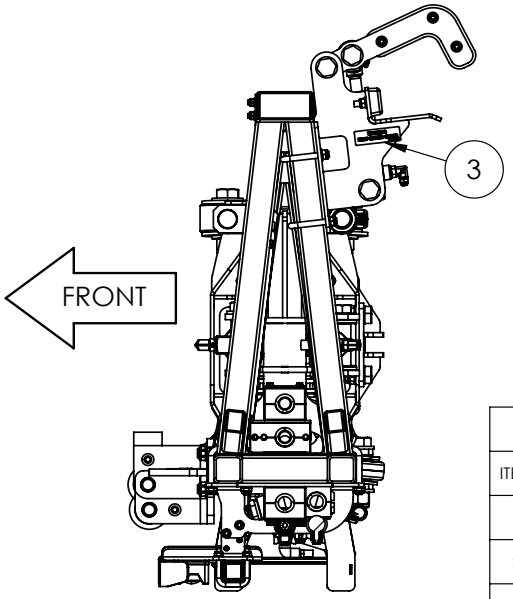

IF DESCRIPTION PREFIX IS ASSEMBLY DRAWING ONLY OR PRODUCTION DRAWING ONLY THE ITEM IS NOT FOR SALE			
ITEM	PART NUMBER	DESCRIPTION	QTY
1	GA8701199	DECAL, BREAKAWAY LUBRICATION, LH	1
2	GA8701200	DECAL, BREAKAWAY LUBRICATION, RH	1
3	GA8701128	DECAL, WARNING KEEP HANDS CLEAR	8
GA6101976-07 GOLDACRES		PRODUCTION DRAWING ONLY, BOOM DECAL AND NOZZLE ASSEMBLY, 36M RH, RIVX	REV 00

Boom Wing, LH, Inner, Bump Stop, RIVX

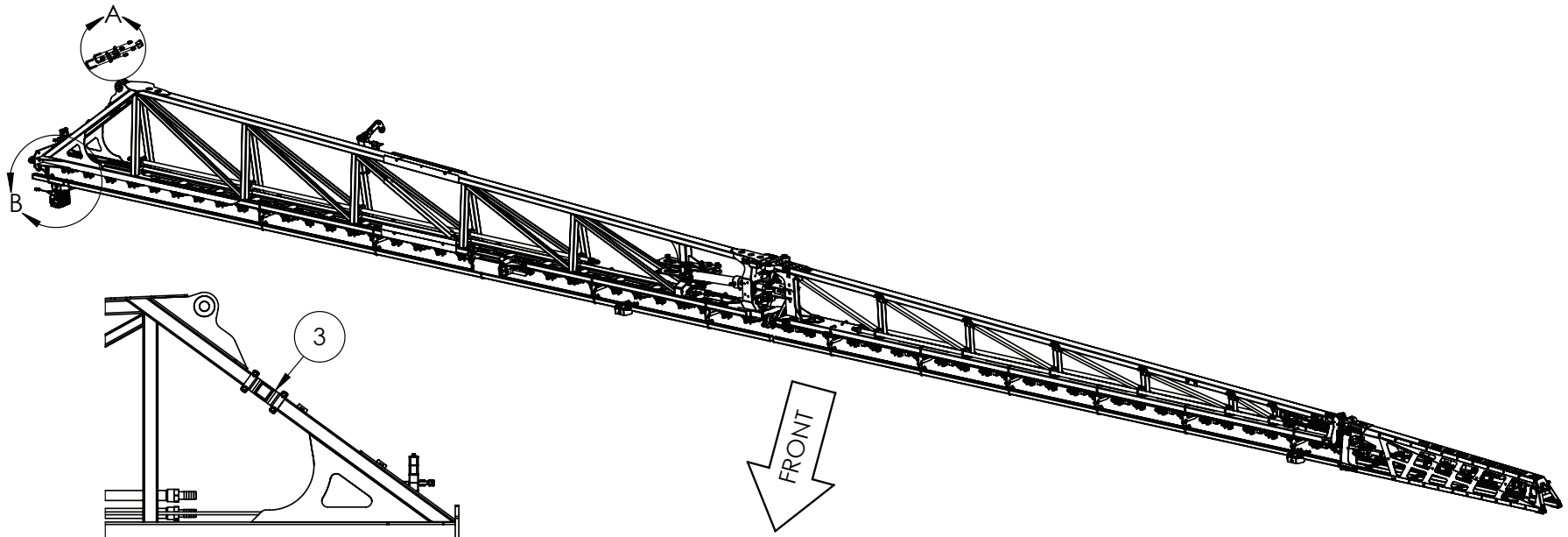

REAR VIEW

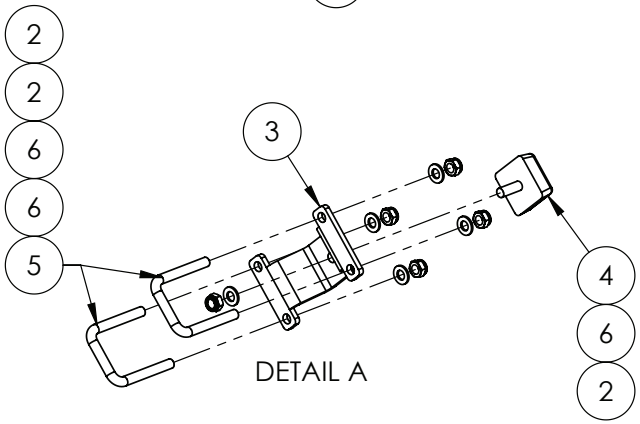

DETAIL A

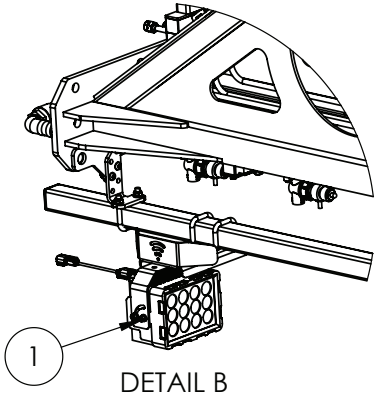

DETAIL B

IF DESCRIPTION PREFIX IS ASSEMBLY DRAWING ONLY OR PRODUCTION DRAWING ONLY THE ITEM IS NOT FOR SALE			
ITEM	PART NUMBER	DESCRIPTION	QTY
1	GA4912805	BOOM LIGHT ASSEMBLY, BLUE, SUIT 40mm BOOM MOUNT	1
2	GA5051445	NUT M10 NYLOC SS	5
3	GA4411285	PLATE, RUBBER STOPPER MOUNTING PLATE, TRITECH, MY21	1
4	GA5078569	RUBBER BUFFER, 50 X 50 X 20mm SQUARE, M10 X 28mm MALE THREAD	1
5	GA5053645	U BOLT SQUARE TOP M10 X 52 X 75	2
6	GA5000117	WASHER M10 FLAT SS HD	5
GA6101972-08 GOLDACRES		PRODUCTION DRAWING ONLY, BOOM FINAL ASSEMBLY, 36M LH, RIVX	REV 00

Boom Wing, LH, Inner, Bump Stop, RIVX

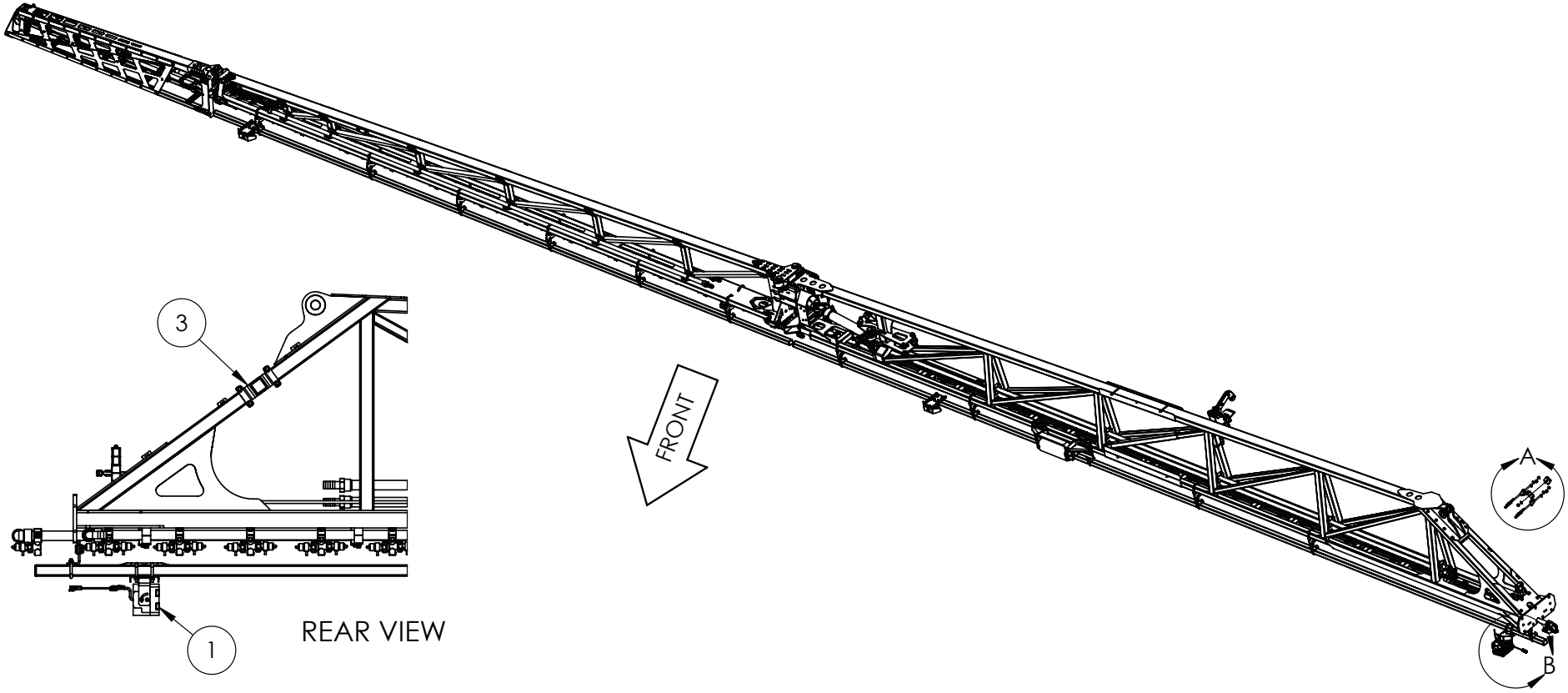

REAR VIEW

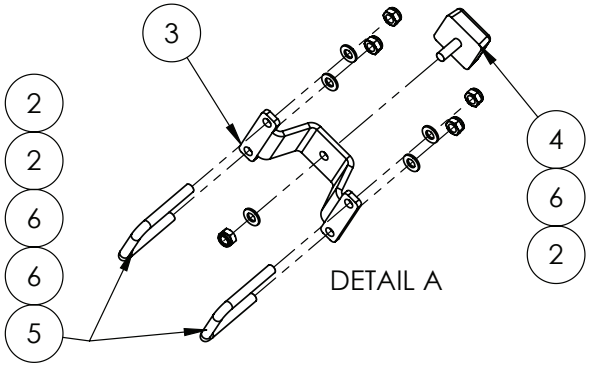

DETAIL A

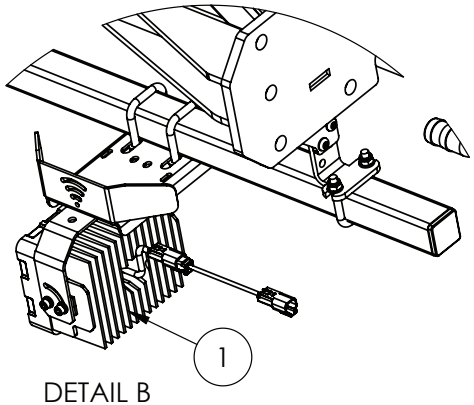

DETAIL B

IF DESCRIPTION PREFIX IS ASSEMBLY DRAWING ONLY OR PRODUCTION DRAWING ONLY THE ITEM IS NOT FOR SALE			
ITEM	PART NUMBER	DESCRIPTION	QTY
1	GA4912805	BOOM LIGHT ASSEMBLY, BLUE, SUIT 40mm BOOM MOUNT	1
2	GA5051445	NUT M10 NYLOC SS	5
3	GA4411285	PLATE, RUBBER STOPPER MOUNTING PLATE, TRITECH, MY21	1
4	GA5078569	RUBBER BUFFER, 50 X 50 X 20mm SQUARE, M10 X 28mm MALE THREAD	1
5	GA5053645	U BOLT SQUARE TOP M10 X 52 X 75	2
6	GA5000117	WASHER M10 FLAT SS HD	5
GA6101976-08 GOLDACRES		PRODUCTION DRAWING ONLY, BOOM FINAL ASSEMBLY, 36M RH, RIVX	REV 00

Bracket, Nozzle Guard, RIVX Boom, Inner Wing, Lower

MOUNTING LOCATION TO BE SELECTED
TO SO THAT THE NUDGE BAR COVERS
THE NOZZEL ON THE HIGHEST SETTING

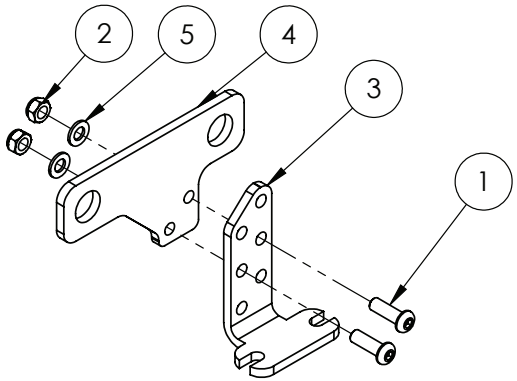

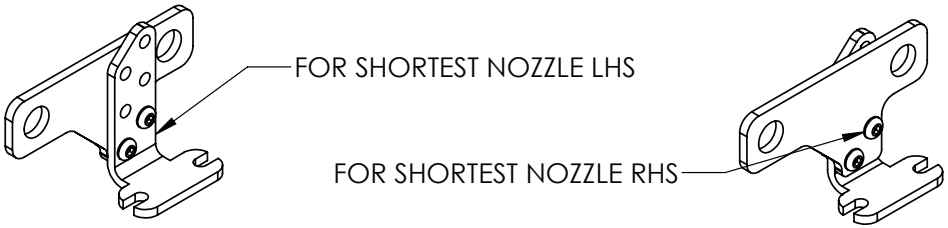

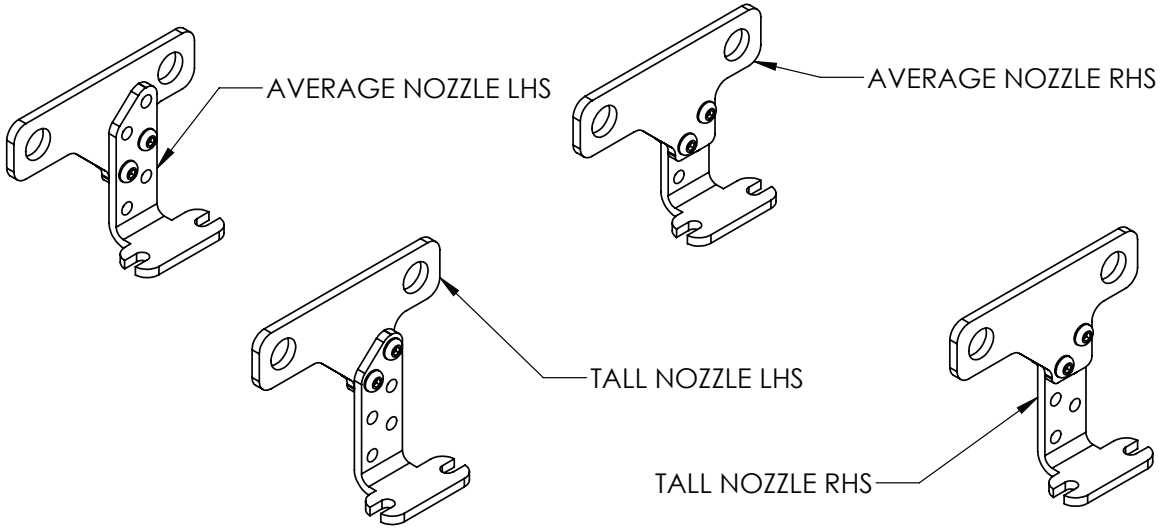

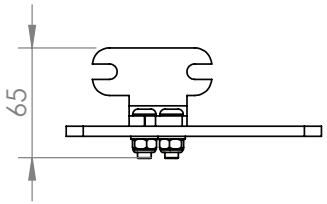

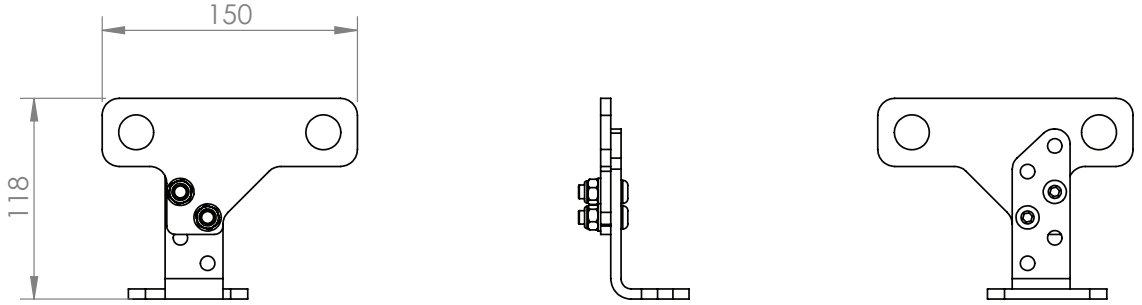

IF DESCRIPTION PREFIX IS ASSEMBLY DRAWING ONLY OR PRODUCTION DRAWING ONLY THE ITEM IS NOT FOR SALE			
ITEM	PART NUMBER	DESCRIPTION	QTY
1	GA5011473	BHCS M8 X 25 SS A2-70	2
2	GA5052590	NUT M8 NYLOC SS	2
3	GA4415520	PLATE, BOOM NUDGE BAR MOUNT, ADJUSTIBLE, LOWER, INSIDE END, TRITECH	1
4	GA4415515	PLATE, BOOM NUDGE BAR MOUNT, ADJUSTIBLE, TOP, INSIDE END, TRITECH	1
5	GA5003651	WASHER 8mm FLAT SS	2
GA4953950 GOLDACRES		PRODUCTION DRAWING ONLY, NOZZLE GUARD MOUNT, RIVX BOOM, INNER	REV 00

Bracket, Nozzle Guard, RIVX Boom, Inner Wing, Top

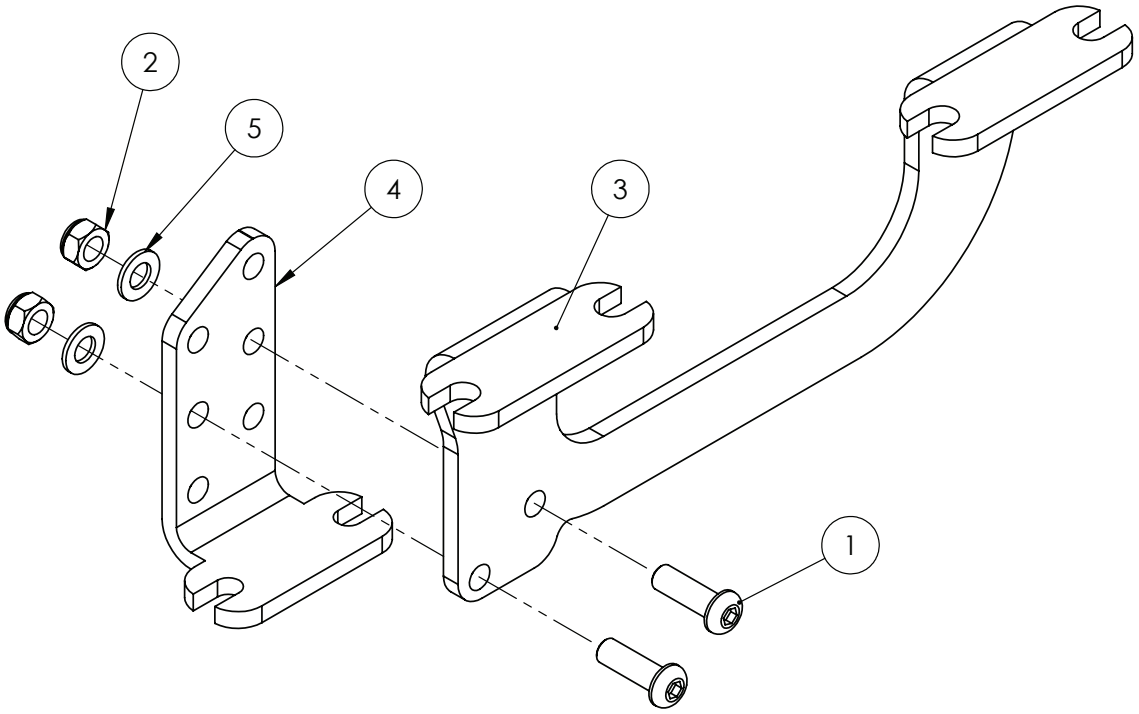

MOUNTING LOCATION TO BE SELECTED
SO THAT THE NUDGE BAR COVERS
THE NOZZLE ON HIGHEST SETTING

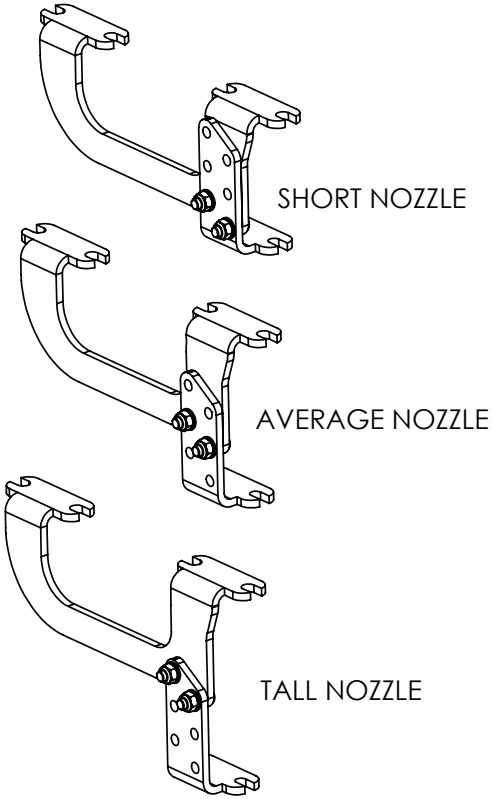

IF DESCRIPTION PREFIX IS ASSEMBLY DRAWING ONLY OR PRODUCTION DRAWING ONLY THE ITEM IS NOT FOR SALE			
ITEM	PART NUMBER	DESCRIPTION	QTY
1	GA5011473	BHCS M8 X 25 SS A2-70	2
2	GA5052590	NUT M8 NYLOC SS	2
3	GA4415500	PLATE, BOOM NUDGE BAR MOUNT, ADJUSTABLE, TOP, INNER, TRITECH	1
4	GA4415505	PLATE, BOOM NUDGE BAR MOUNT, ADJUSTIBLE, LOWER, TRITECH	1
5	GA5003651	WASHER 8mm FLAT SS	2
GA4953945 GOLDACRES		PRODUCTION DRAWING ONLY, NOZZLE GUARD MOUNTING, RIVX BOOM, INNER	REV 00.E

Bracket, Nozzle Guard, RIVX Boom, Outer Wing

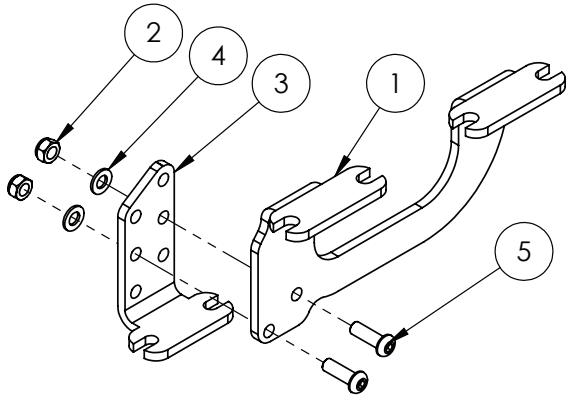

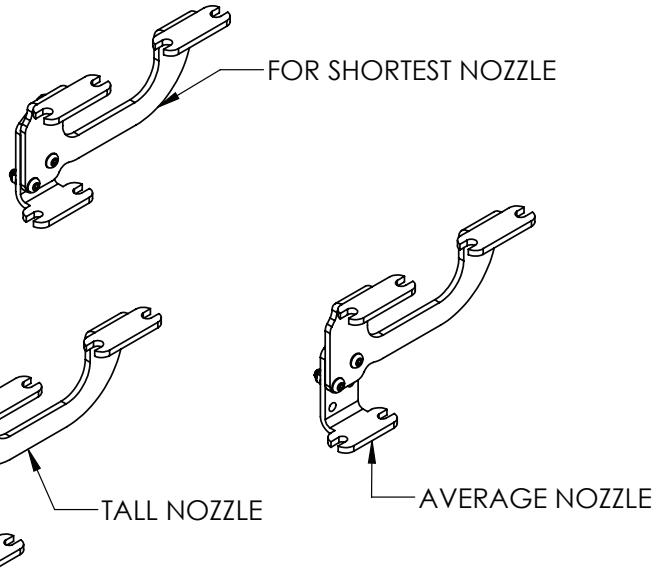

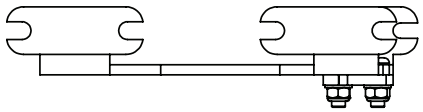

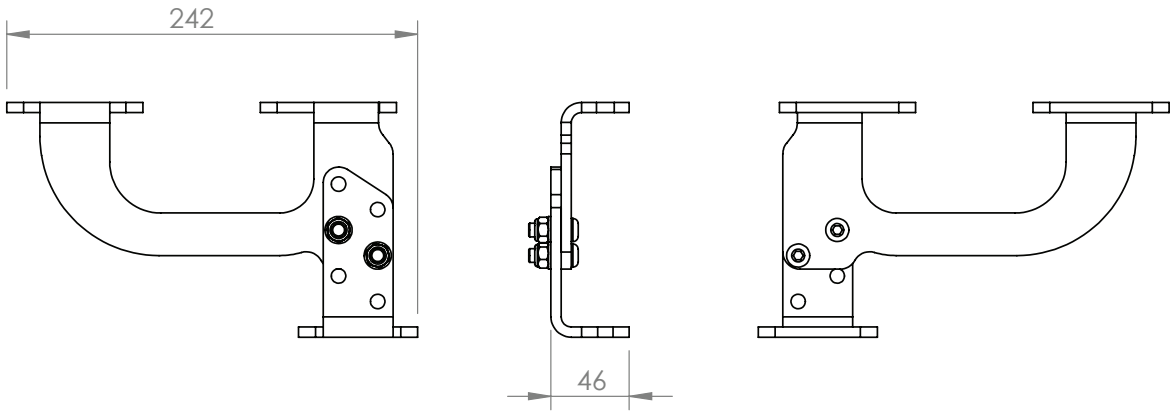

IF DESCRIPTION PREFIX IS ASSEMBLY DRAWING ONLY OR PRODUCTION DRAWING ONLY THE ITEM IS NOT FOR SALE			
ITEM	PART NUMBER	DESCRIPTION	QTY
1	GA4415510	PLATE, BOOM NUDGE BAR MOUNT, ADJUSTABLE, TOP, OUTER, TRITECH	1
2	GA5052590	NUT M8 NYLOC SS	2
3	GA4415505	PLATE, BOOM NUDGE BAR MOUNT, ADJUSTIBLE, LOWER, TRITECH	1
4	GA5003651	WASHER 8mm FLAT SS	2
5	GA5011473	BHCS M8 X 25 SS A2-70	2
GA4953940 GOLDACRES		PRODUCTION DRAWING ONLY, NOZZLE GUARD MOUNTING, RIVX BOOM, OUTER	REV 00

Boom Wings, 48mt,

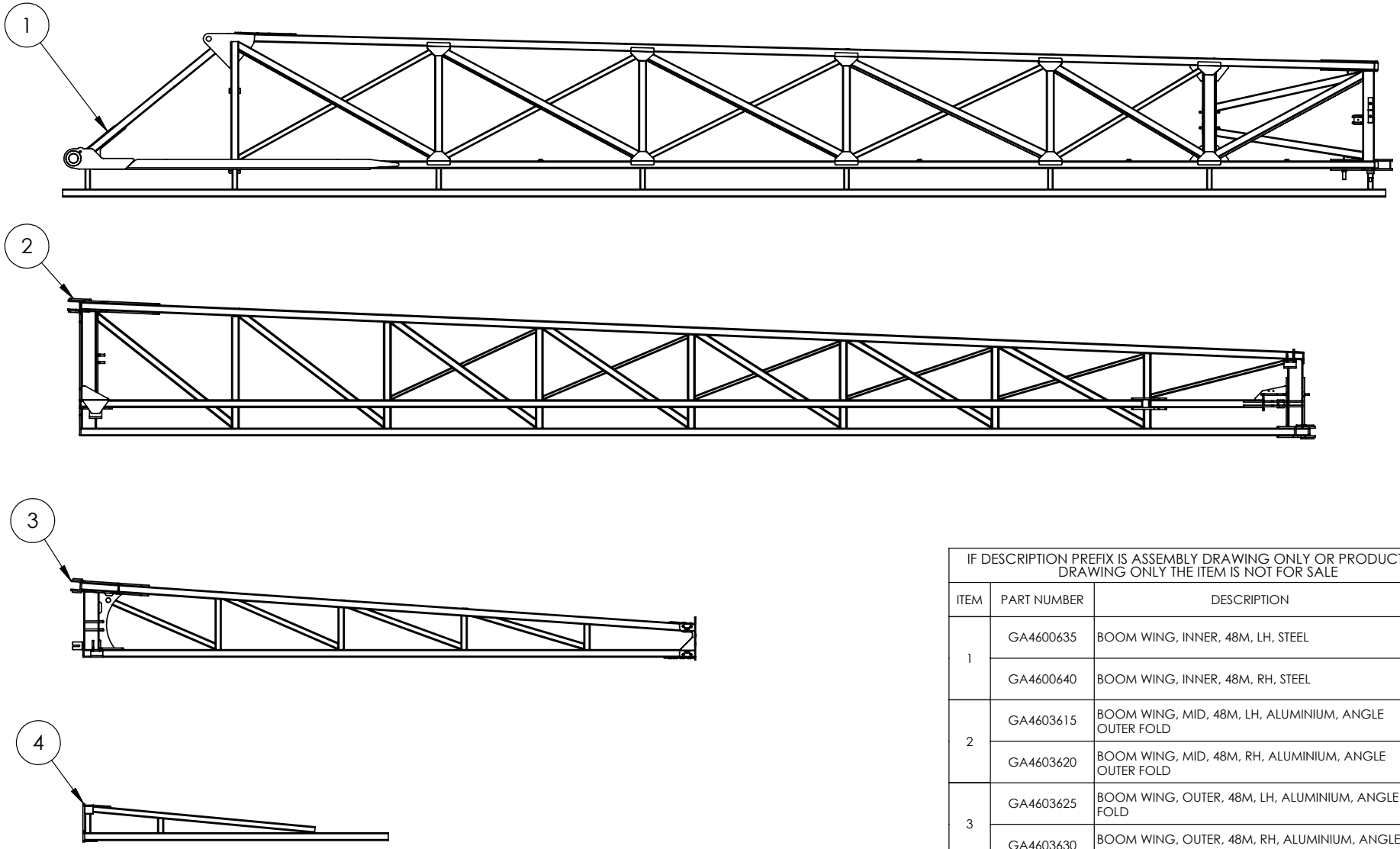

IF DESCRIPTION PREFIX IS ASSEMBLY DRAWING ONLY OR PRODUCTION DRAWING ONLY THE ITEM IS NOT FOR SALE			
ITEM	PART NUMBER	DESCRIPTION	QTY
1	GA4600635	BOOM WING, INNER, 48M, LH, STEEL	1
	GA4600640	BOOM WING, INNER, 48M, RH, STEEL	1
2	GA4603615	BOOM WING, MID, 48M, LH, ALUMINIUM, ANGLE OUTER FOLD	1
	GA4603620	BOOM WING, MID, 48M, RH, ALUMINIUM, ANGLE OUTER FOLD	1
3	GA4603625	BOOM WING, OUTER, 48M, LH, ALUMINIUM, ANGLE FOLD	1
	GA4603630	BOOM WING, OUTER, 48M, RH, ALUMINIUM, ANGLE FOLD	1
4	GA4656123	ALUM BREAKAWAY 2M, SUIT 3D BREAKAWAY 2.0	1
GA7800493 GOLDACRES		BOOM WINGS, 48MT	REV 00

Inner Mounting Hardware, LH, 48mt

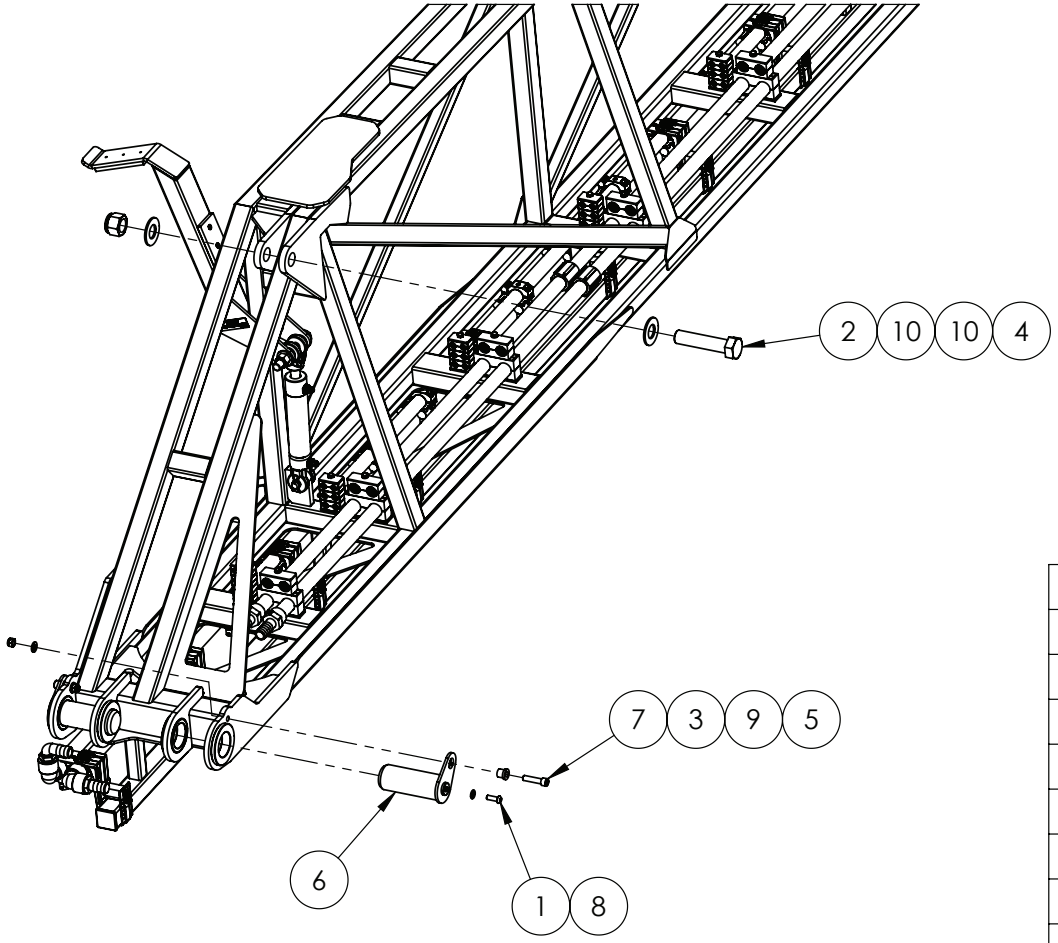

IF DESCRIPTION PREFIX IS ASSEMBLY DRAWING ONLY OR PRODUCTION DRAWING ONLY THE ITEM IS NOT FOR SALE			
ITEM	PART NUMBER	DESCRIPTION	QTY
1	GA5048120	BHCS M10 X 30 SS A2-70	2
2	GA0500073	BOLT 1 1/4" UNC X 5 1/2" GR8 ZP	1
3	MACH0152	BUSH WITH SHOULDER, 12.3 ID X 25 OD X 21 LONG, SUIT PARALIFT PIN BOLTS	2
4	GA0500071	NUT 1 1/4" NYLOC UNC ZP	1
5	GA5012461	NUT M12 NYLOC ZP	2
6	GA4600625	PIN, BOOM TILT PIVOT, 60mm OD, FABRICATED, 48M	2
7	GA5051470	SHCS M12 X 50 GR 12.9 ZP	2
8	GA5000117	WASHER M10 FLAT SS HD	2
9	GA5000577	WASHER M12 FLAT SS HD	2
10	GA0500072	WASHER M30 OR 1 1/4" X 2 5/8" FLAT ZP	2
GA6101992-11 GOLDACRES		ASSEMBLY DRAWING ONLY, BOOM WING, 48M LH	REV 00

Inner Mounting Hardware, RH, 48mt

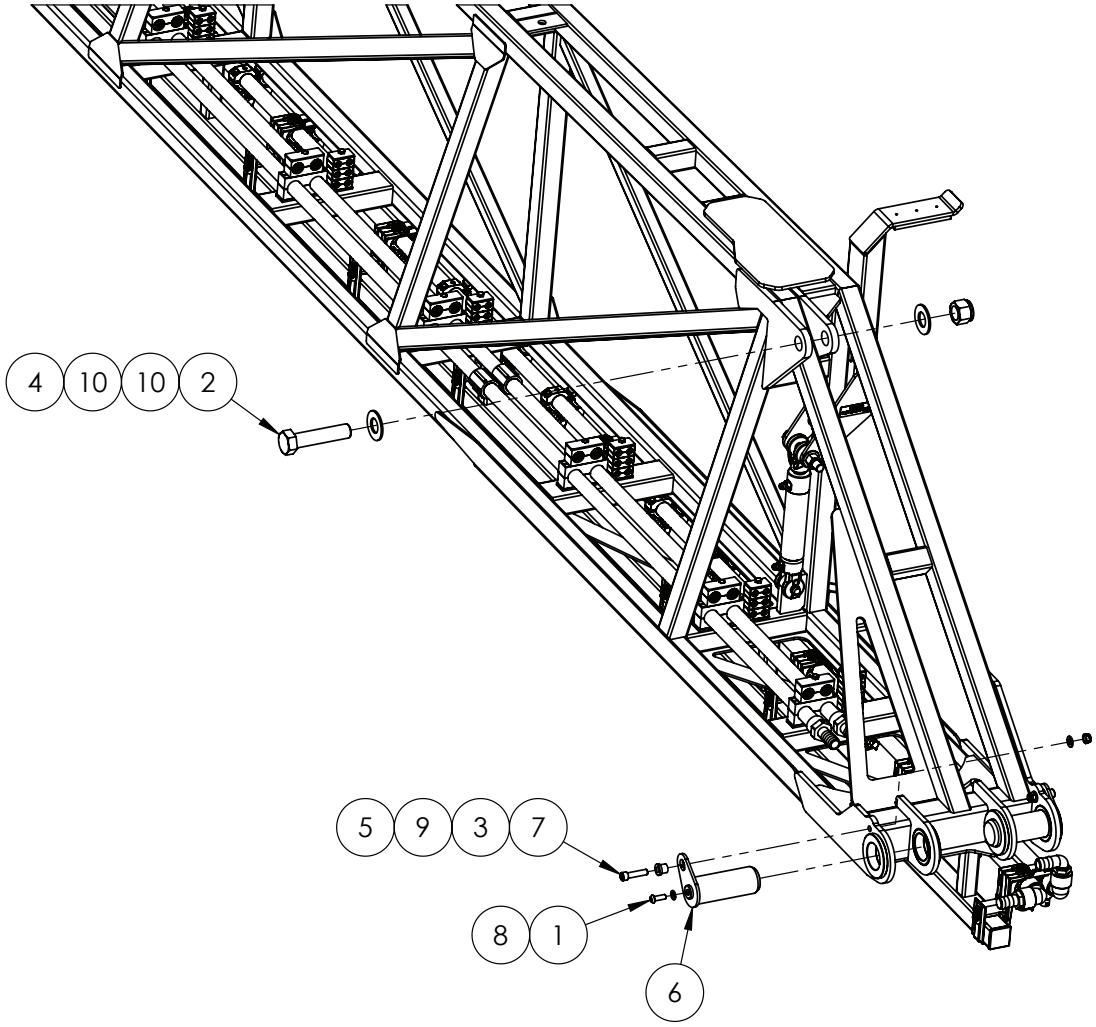

IF DESCRIPTION PREFIX IS ASSEMBLY DRAWING ONLY OR PRODUCTION DRAWING ONLY THE ITEM IS NOT FOR SALE			
ITEM	PART NUMBER	DESCRIPTION	QTY
1	GA5048120	BHCS M10 X 30 SS A2-70	2
2	GA0500073	BOLT 1 1/4" UNC X 5 1/2" GR8 ZP	1
3	MACH0152	BUSH WITH SHOULDER, 12.3 ID X 25 OD X 21 LONG, SUIT PARALIFT PIN BOLTS	2
4	GA0500071	NUT 1 1/4" NYLOC UNC ZP	1
5	GA5012461	NUT M12 NYLOC ZP	2
6	GA4600625	PIN, BOOM TILT PIVOT, 60mm OD, FABRICATED, 48M	2
7	GA5051470	SHCS M12 X 50 GR 12.9 ZP	2
8	GA5000117	WASHER M10 FLAT SS HD	2
9	GA5000577	WASHER M12 FLAT SS HD	2
10	GA0500072	WASHER M30 OR 1 1/4" X 2 5/8" FLAT ZP	2
GA6101993-11 GOLDACRES		ASSEMBLY DRAWING ONLY. BOOM WING, 48M RH	REV 00

Boom Catch, LH 48mt

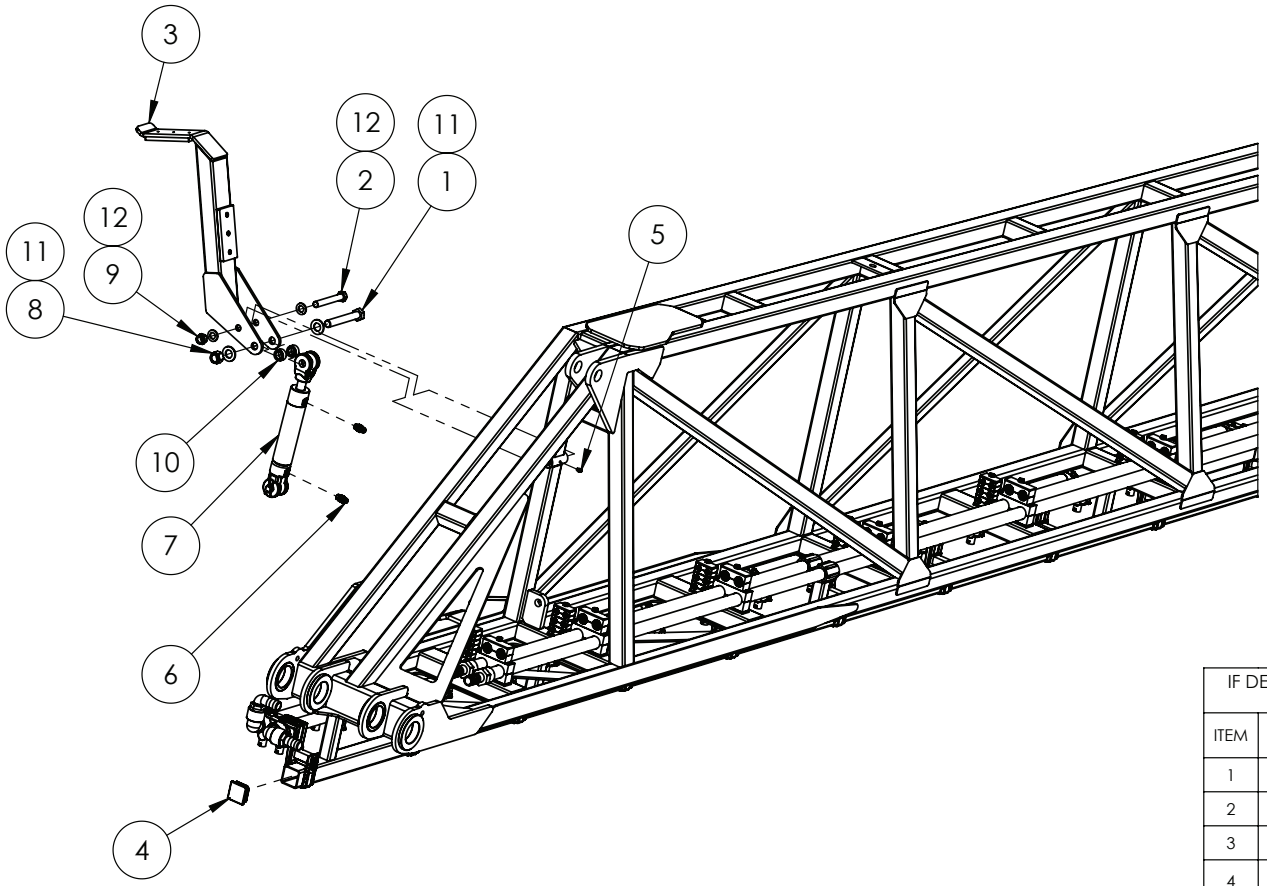

IF DESCRIPTION PREFIX IS ASSEMBLY DRAWING ONLY OR PRODUCTION DRAWING ONLY THE ITEM IS NOT FOR SALE			
ITEM	PART NUMBER	DESCRIPTION	QTY
1	GA5070335	BOLT 3/4" UNC X 5 1/2" GR8 ZP	1
2	GA5011275	BOLT M16 X 120 GR8.8 ZP	1
3	GA4949075	BOOM CATCH ASSEMBLY, 48M BOOM	1
4	GA5024720	END CAP, PLASTIC, BLACK, INSERT, RHS. 50 X 50, 2.4 - 4.0mm WALL	2
5	GA5012203	GREASE NIPPLE, SHORT, 1/4 UNF, MACH0207	1
6	GA3500146	HYDRAULIC ADAPTOR, 9/16" JICM, 9/16" UNOM, S90-0909, RYCO	2
7	GA3500601	HYDRAULIC CYLINDER , DOUBLE ACTING, 1.5" BORE, 0.875" ROD, 4" STROKE	1
8	GA5048430	NUT 3/4" NYLOC UNC ZP	1
9	GA5001029	NUT M16 NYLOC ZP	1
10	GA4553270	SPACER, ID19.5, OD40, 48m BOOM CATCH RAM SPACER	2
11	GA5001045	WASHER 3/4" FLAT ZP	2
12	GA5001043	WASHER M16 FLAT SS HD	2
GA6101992-06 GOLDACRES		ASSEMBLY DRAWING ONLY, BOOM WING, 48M LH	REV 01

Boom Catch, RH, 48mt

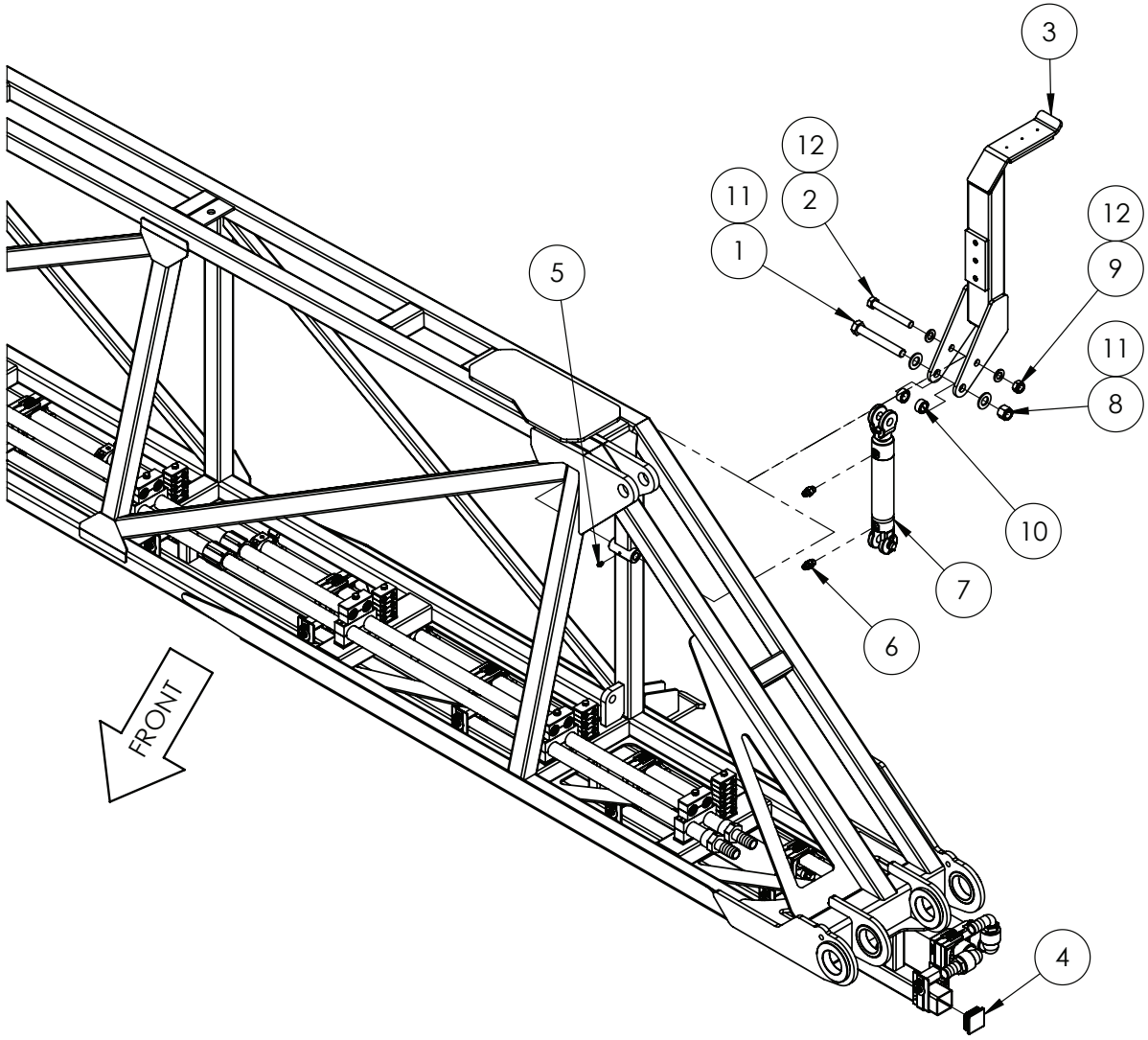

IF DESCRIPTION PREFIX IS ASSEMBLY DRAWING ONLY OR PRODUCTION DRAWING ONLY THE ITEM IS NOT FOR SALE			
ITEM	PART NUMBER	DESCRIPTION	QTY
1	GA5070335	BOLT 3/4" UNC X 5 1/2" GR8 ZP	1
2	GA5011275	BOLT M16 X 120 GR8.8 ZP	1
3	GA4949075	BOOM CATCH ASSEMBLY, 48M BOOM	1
4	GA5003783	END CAP, PLASTIC, BLACK, INSERT, RHS. 50 X 50, 0.8 - 2.5mm WALL	2
5	GA5012203	GREASE NIPPLE, SHORT, 1/4 UNF, MACH0207	1
6	GA3500146	HYDRAULIC ADAPTOR, 9/16" JICM, 9/16" UNOM, S90-0909, RYCO	2
7	GA3500601	HYDRAULIC CYLINDER , DOUBLE ACTING, 1.5" BORE, 0.875" ROD, 4" STROKE	1
8	GA5048430	NUT 3/4" NYLOC UNC ZP	1
9	GA5001029	NUT M16 NYLOC ZP	1
10	GA4553270	SPACER, ID19.5, OD40, 48m BOOM CATCH RAM SPACER	2
11	GA5001045	WASHER 3/4" FLAT ZP	2
12	GA5001043	WASHER M16 FLAT SS HD	2
GA6101993-06 GOLDACRES		ASSEMBLY DRAWING ONLY, BOOM WING, 48M RH	REV 01

Boom Protectors, LH, 48mt

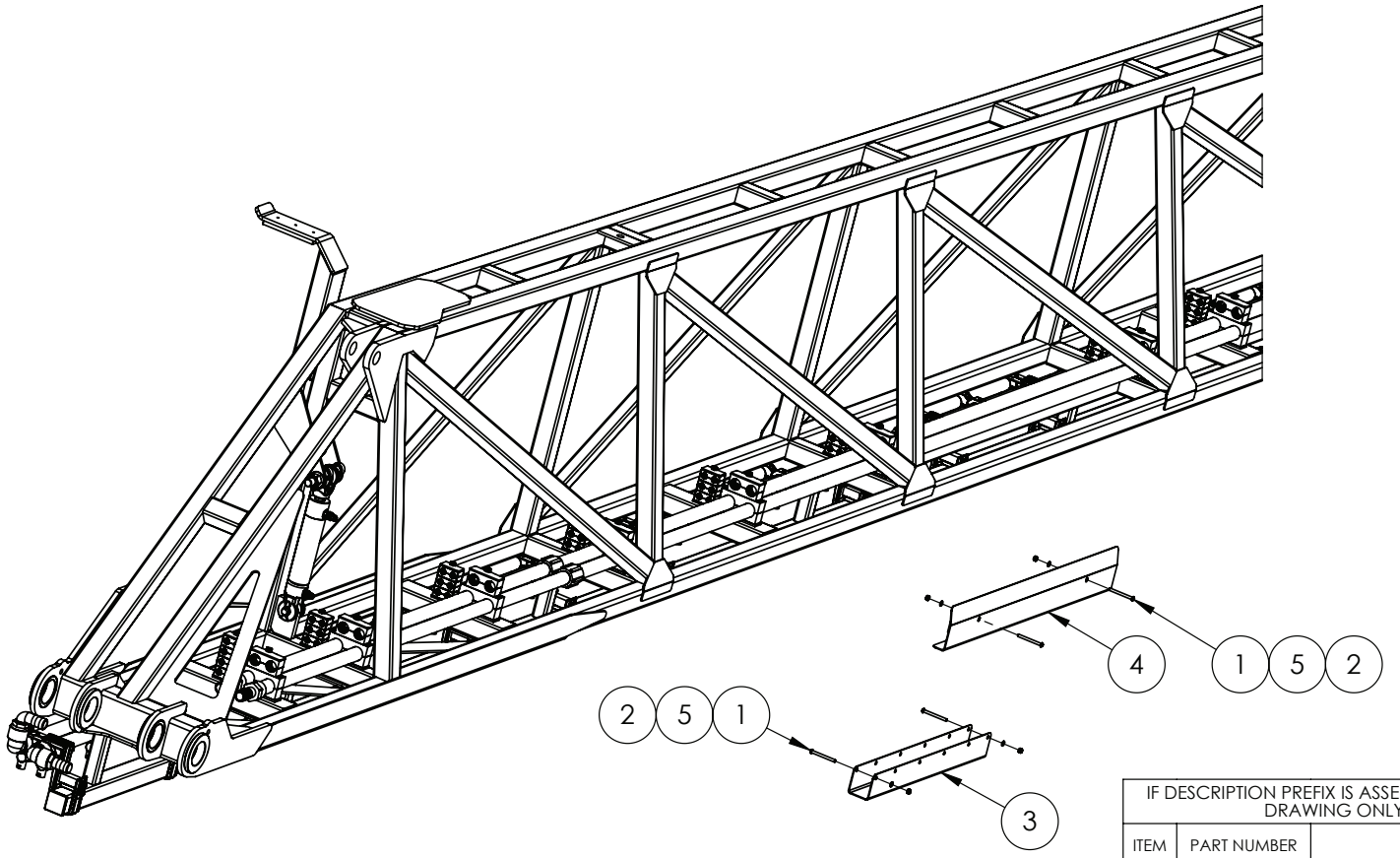

IF DESCRIPTION PREFIX IS ASSEMBLY DRAWING ONLY OR PRODUCTION DRAWING ONLY THE ITEM IS NOT FOR SALE			
ITEM	PART NUMBER	DESCRIPTION	QTY
1	GA0500067	BHCS M6 X 65 GR12.9 ZP	4
2	GA5004429	NUT M6 NYLOC SS	4
3	F70799A	PROTECTOR, BOOM CORD, SUIT 50 X 50, 600mm, SS	1
4	GA4402215	PROTECTOR, BOOM CORD, SUIT 50 X 50, EXTENDED GUIDE, SS	1
5	GA5004437	WASHER M6 FLAT SS HD	4
GA6101992-06 GOLDACRES		ASSEMBLY DRAWING ONLY, BOOM WING, 48M LH	REV 01

Boom Protectors, RH, 48mt

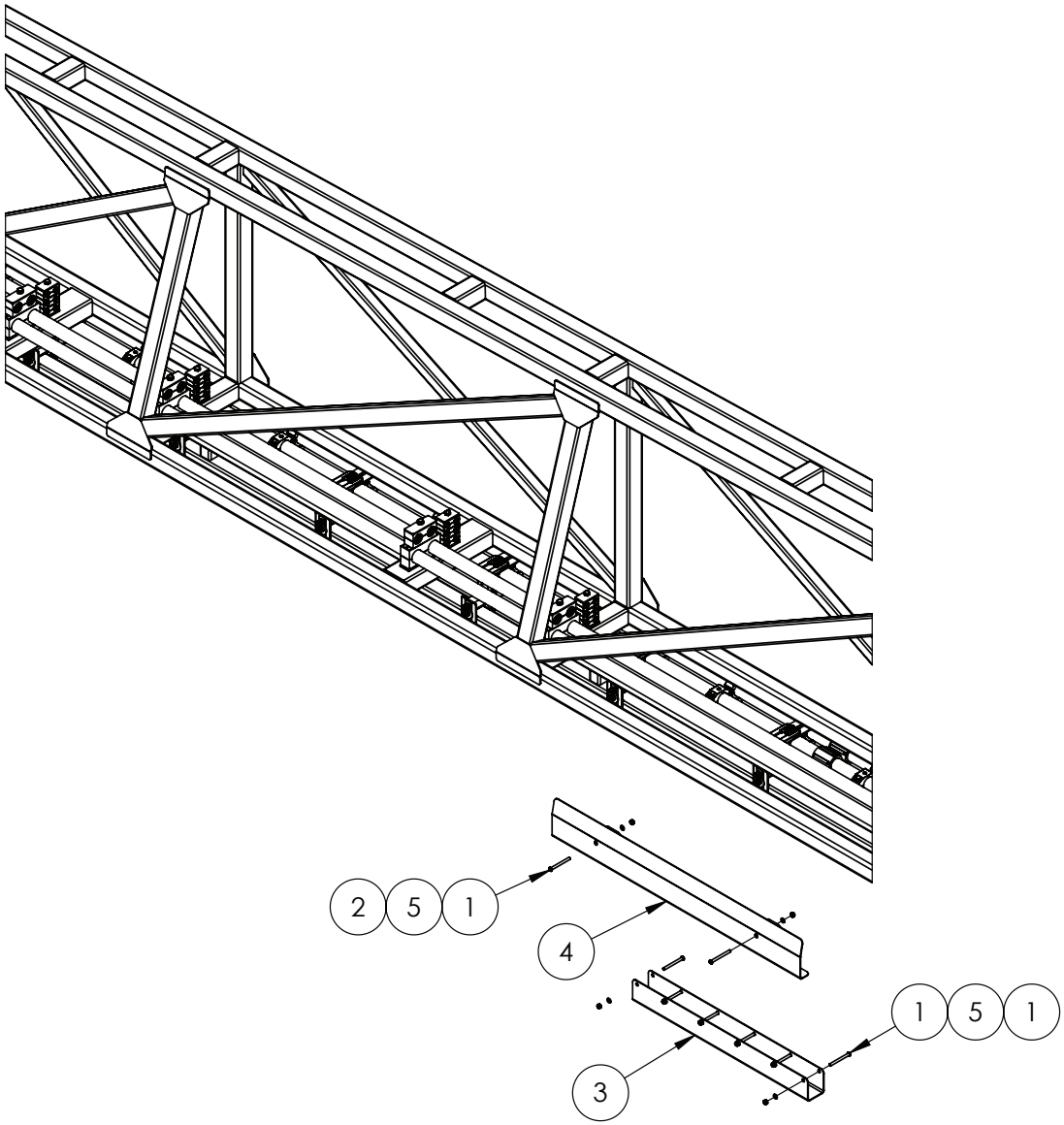

IF DESCRIPTION PREFIX IS ASSEMBLY DRAWING ONLY OR PRODUCTION DRAWING ONLY THE ITEM IS NOT FOR SALE			
ITEM	PART NUMBER	DESCRIPTION	QTY.
1	GA0500067	BHCS M6 X 65 GR12.9 ZP	8
2	GA5048115	NUT M6 NYLOC ZP	8
3	F70799A	PROTECTOR, BOOM CORD, SUIT 50 X 50, 600mm, SS	1
4	GA4402215	PROTECTOR, BOOM CORD, SUIT 50 X 50, EXTENDED GUIDE, SS	1
5	GA5004437	WASHER M6 FLAT SS HD	8
GA6101993-06 GOLDACRES		ASSEMBLY DRAWING ONLY, BOOM WING, 48M RH	REV 01

Boom Catch Arm Assembly, 48mt

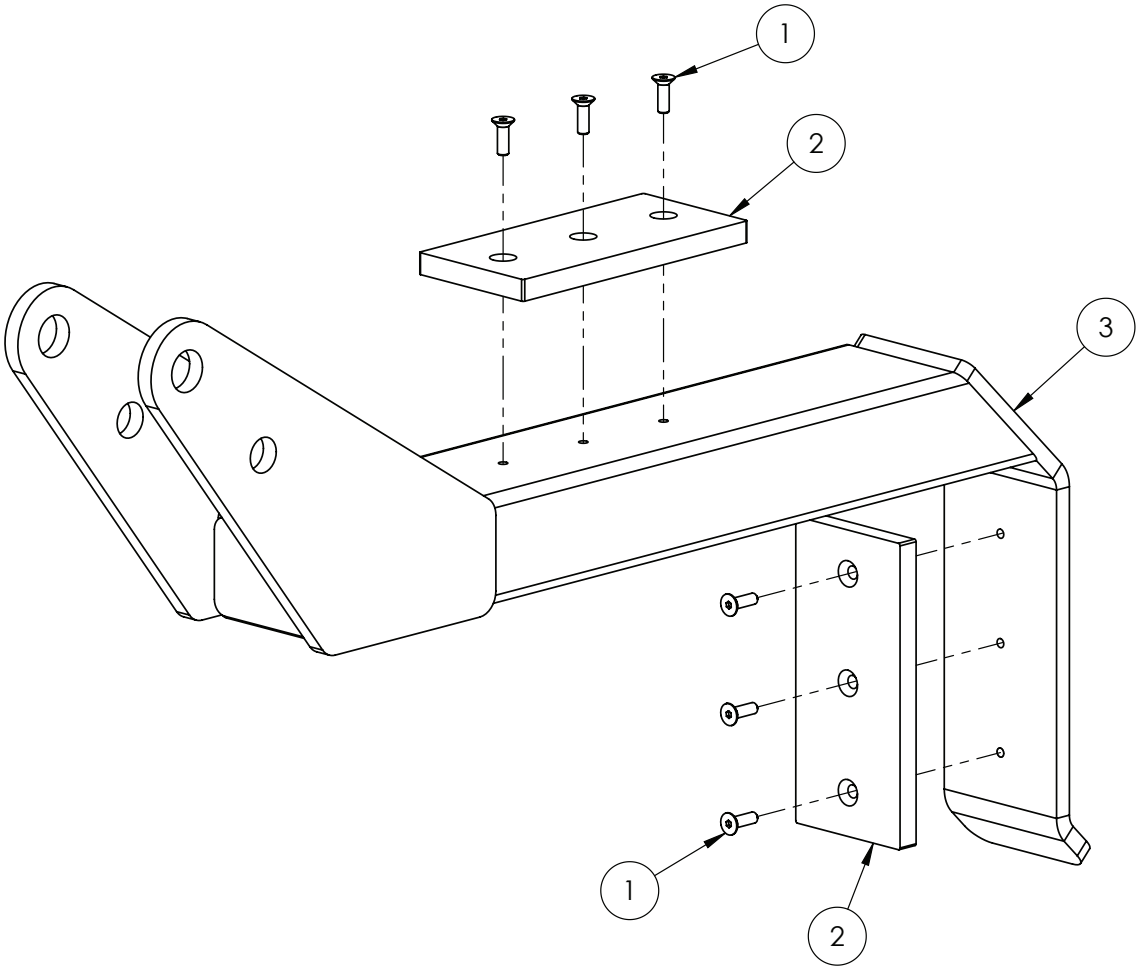

IF DESCRIPTION PREFIX IS ASSEMBLY DRAWING ONLY OR PRODUCTION DRAWING ONLY THE ITEM IS NOT FOR SALE			
ITEM	PART NUMBER	DESCRIPTION	QTY
1	GA5051230	CSCS M5 X 16 SS A2-70	6
2	GA5072450	PLASTIC WEAR STRIP BOOM REST POLYSTONE 7000SR 65 X 140 X 10mm	2
3	GA4600730	TRANSPORT CATCH ARM, 48M BOOM	1
GA4949075 GOLDACRES		BOOM CATCH ASSEMBLY, 48M BOOM	REV 00

Second Stage Fold, LH, 48mt

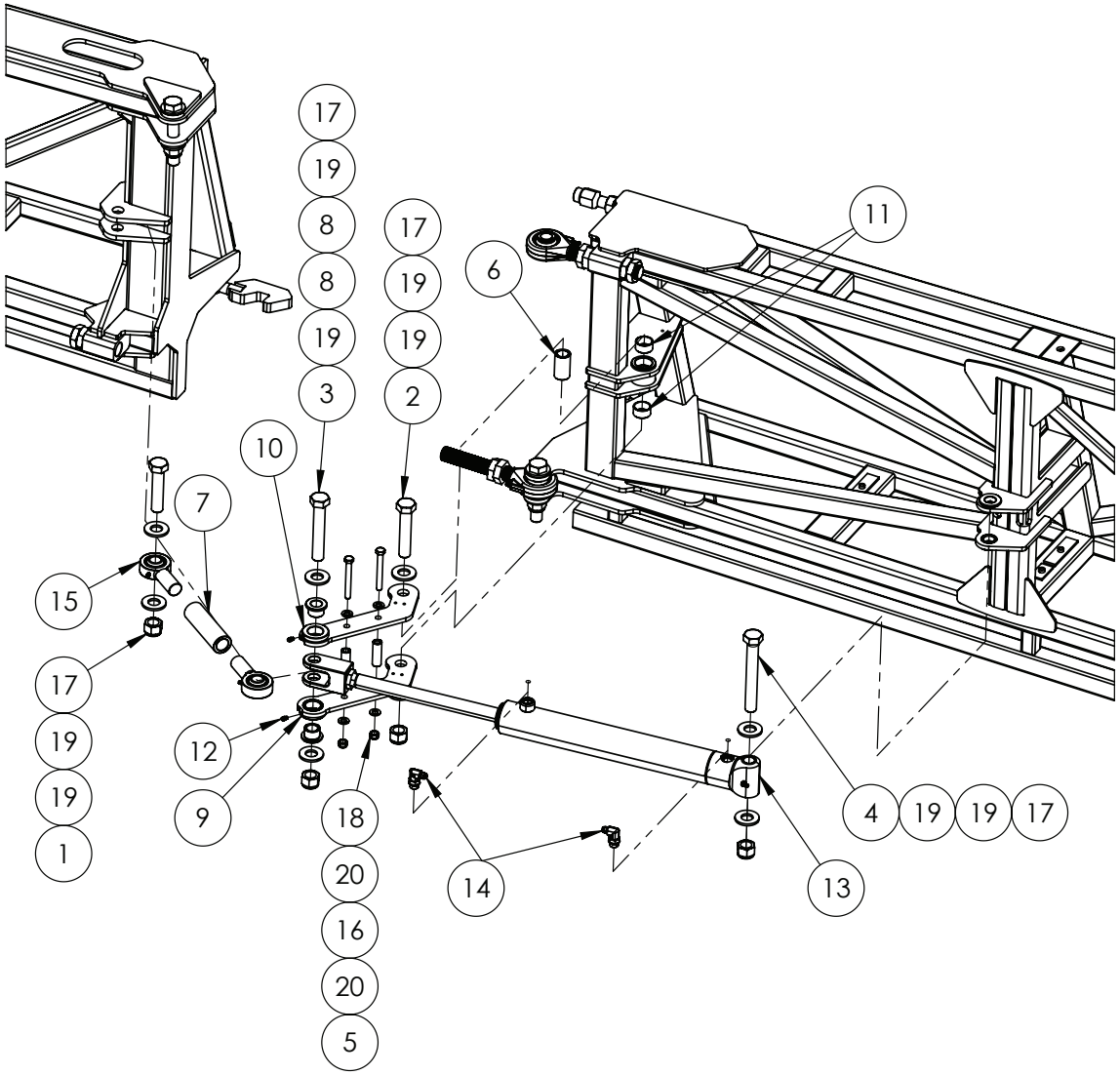

IF DESCRIPTION PREFIX IS ASSEMBLY DRAWING ONLY OR PRODUCTION DRAWING ONLY THE ITEM IS NOT FOR SALE			
ITEM	PART NUMBER	DESCRIPTION	QTY
1	GA5006149	BOLT 1" UNC X 4 1/2" GR8 ZP	1
2	GA5006031	BOLT 1" UNC X 5" GR8 ZP	1
3	GA5006033	BOLT 1" UNC X 6" GR8 ZP	1
4	GA5006037	BOLT 1" UNC X 7 1/2" GR8 ZP	1
5	GA5000259	BOLT M12 X 100 GR8.8 ZP	2
6	GA4550210	BUSH, FOLD LINK BOOM END, TRITECH BOOM 2015	1
7	GA4550230	BUSH, ROSE END LINK, 1 1/4"UNF, 150mm LONG, TRITECH BOOM 2015	1
8	GA4550205	FLANGE BUSH, ROD END PIVOT, TRITECH BOOM 2015	2
9	GA4601005	FOLD LINK A, TOP, ROD END, TRITECH BOOM 2015	1
10	GA4601010	FOLD LINK B, TOP, ROD END, TRITECH BOOM 2015	1
11	GA5055650	GLACIER BUSH, ID 35 X OD 39 X 20 LONG	2
12	GA5012203	GREASE NIPPLE, SHORT, 1/4 UNF, MACH0207	2
13	GA3500060	HYDRAULIC CYLINDER, BORE 2.5", ROD 1.25", STROKE 400mm	1
14	GA3500700	HYDRAULIC ADAPTOR, ELBOW, 90 DEGREE, 9/16" JIC MALE X 3/4" UN MALE O-RING, S91-0912	2
15	GA5070530	LARGE ROSE END 1" X 1 1/4" UNF BB074-VM16	2
16	GA4550215	LINK SPACER, TRITECH BOOM 2015	2
17	GA5012439	NUT 1" NYLOC UNC ZP	4
18	GA5012461	NUT M12 NYLOC ZP	2
19	GA5017659	WASHER 1" FLAT ZP HD	8
20	GA5000577	WASHER M12 FLAT SS HD	4
GA6101992-04 GOLDACRES		ASSEMBLY DRAWING ONLY, BOOM WING, 48M LH	REV 00

Second Stage Fold, RH, 48mt

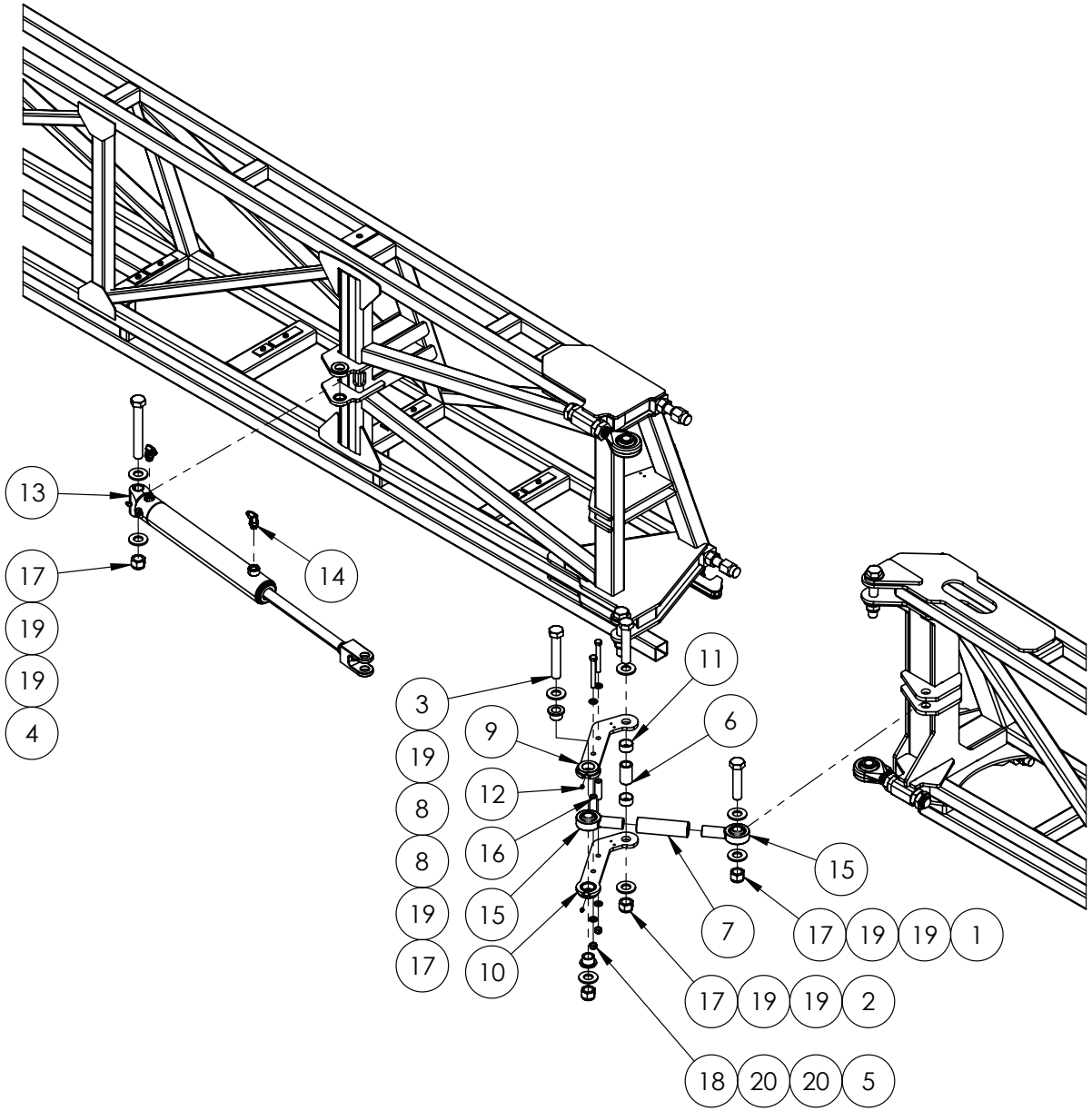

IF DESCRIPTION PREFIX IS ASSEMBLY DRAWING ONLY OR PRODUCTION DRAWING ONLY THE ITEM IS NOT FOR SALE			
ITEM	PART NUMBER	DESCRIPTION	QTY.
1	GA5006149	BOLT 1" UNC X 4 1/2" GR8 ZP	1
2	GA5006031	BOLT 1" UNC X 5" GR8 ZP	1
3	GA5006033	BOLT 1" UNC X 6" GR8 ZP	1
4	GA5006037	BOLT 1" UNC X 7 1/2" GR8 ZP	1
5	GA5000259	BOLT M12 X 100 GR8.8 ZP	2
6	GA4550210	BUSH, FOLD LINK BOOM END, TRITECH BOOM 2015	1
7	GA4550230	BUSH, ROSE END LINK, 1 1/4"UNF, 150mm LONG, TRITECH BOOM 2015	1
8	GA4550205	FLANGE BUSH, ROD END PIVOT, TRITECH BOOM 2015	2
9	GA4601005	FOLD LINK A, TOP, ROD END, TRITECH BOOM 2015	1
10	GA4601010	FOLD LINK B, TOP, ROD END, TRITECH BOOM 2015	1
11	GA5055650	GLACIER BUSH, ID 35 X OD 39 X 20 LONG	2
12	GA5012203	GREASE NIPPLE, SHORT, 1/4 UNF, MACH0207	2
13	GA3500060	HYDRAULIC CYLINDER, BORE 2.5", ROD 1.25", STROKE 400mm	1
14	GA3500700	HYDRAULIC ADAPTOR, ELBOW, 90 DEGREE, 9/16" JIC MALE X 3/4" UN MALE O-RING, S91-0912	2
15	GA5070530	LARGE ROSE END 1" X 1 1/4" UNF BB074-VM16	2
16	GA4550215	LINK SPACER, TRITECH BOOM 2015	2
17	GA5012439	NUT 1" NYLOC UNC ZP	4
18	GA5012461	NUT M12 NYLOC ZP	2
19	GA5017659	WASHER 1" FLAT ZP HD	8
20	GA5000577	WASHER M12 FLAT SS HD	4
GA6101993-04 GOLDACRES		ASSEMBLY DRAWING ONLY, BOOM WING, 48M RH	REV 00

Latch Assembly, Second Stage Fold, LH, 48mt

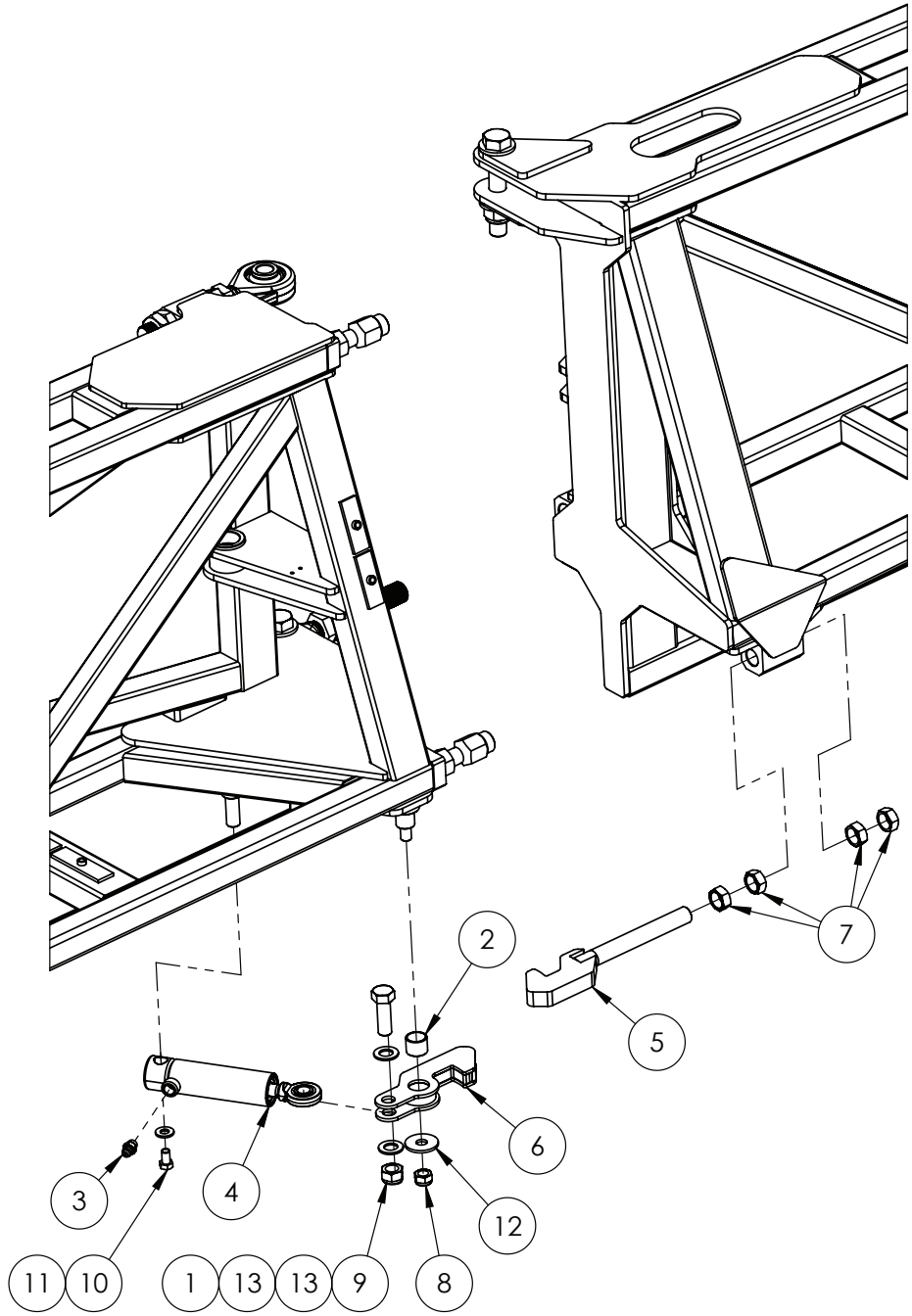

IF DESCRIPTION PREFIX IS ASSEMBLY DRAWING ONLY OR PRODUCTION DRAWING ONLY THE ITEM IS NOT FOR SALE			
ITEM	PART NUMBER	DESCRIPTION	QTY
1	GA5011333	BOLT M20 X 60 GR8.8 ZP	1
2	GA5074375	GLACIER BUSH, 28 ID X 25 LONG, PG283225F	1
3	GA3500146	HYDRAULIC ADAPTOR, 9/16" JICM, 9/16" UNOM, S90-0909, RYCO	1
4	GA3500480	HYDRAULIC CYLINDER, BORE 1.5", ROD 0.75", STROKE 28mm, DISPLACEMENT, SPRING RETURN	1
5	GA4600725	LATCH HOOK, ADJUSTER, 48m BOOM	1
6	GA4604055	LATCH HOOK, 28mm PIVOT, 48M BOOM, MY22	1
7	GA0500048	NUT 1" UNF 12 TPI LOCK ZP	4
8	GA5001029	NUT M16 NYLOC ZP	1
9	GA5048125	NUT M20 NYLOC ZP	1
10	GA5011227	SET SCREW M12 X 20 GR8.8 ZP	1
11	GA5017673	WASHER 1/2" FLAT ZP HT YELLOW	1
12	GA5011955	WASHER M16X50X4 MUDGUARD ZP	1
13	GA5001741	WASHER M20 FLAT SS HD	2
GA6101992-04 GOLDACRES		ASSEMBLY DRAWING ONLY, BOOM WING, 48M LH	REV 00

Latch Assembly, Second Stage Fold, RH, 48mt

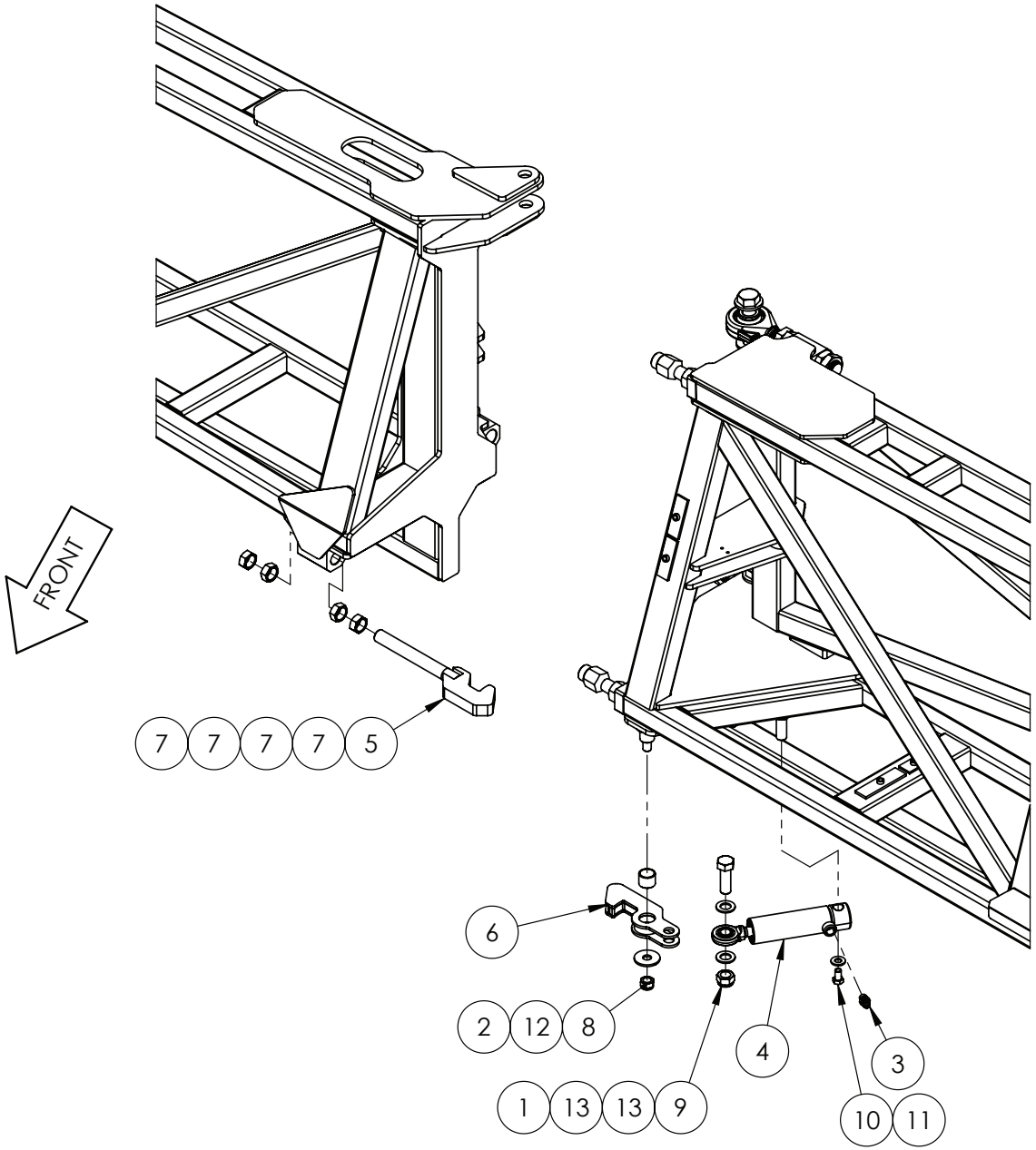

IF DESCRIPTION PREFIX IS ASSEMBLY DRAWING ONLY OR PRODUCTION DRAWING ONLY THE ITEM IS NOT FOR SALE			
ITEM	PART NUMBER	DESCRIPTION	QTY.
1	GA5011333	BOLT M20 X 60 GR8.8 ZP	1
2	GA5074375	GLACIER BUSH, 28 ID X 25 LONG, PG283225F	1
3	GA3500146	HYDRAULIC ADAPTOR, 9/16" JICM, 9/16" UNOM, S90-0909, RYCO	1
4	GA3500480	HYDRAULIC CYLINDER, BORE 1.5", ROD 0.75", STROKE 28mm, DISPLACEMENT, SPRING RETURN	1
5	GA4600725	LATCH HOOK, ADJUSTER, 48m BOOM	1
6	GA4604055	LATCH HOOK, 28mm PIVOT, 48M BOOM, MY22	1
7	GA0500048	NUT 1" UNF 12 TPI LOCK ZP	4
8	GA5001029	NUT M16 NYLOC ZP	1
9	GA5048125	NUT M20 NYLOC ZP	1
10	GA5011227	SET SCREW M12 X 20 GR8.8 ZP	1
11	GA5017673	WASHER 1/2" FLAT ZP HT YELLOW	1
12	GA5011955	WASHER M16X50X4 MUDGUARD ZP	1
13	GA5001741	WASHER M20 FLAT SS HD	2
GA6101993-04 GOLDACRES		ASSEMBLY DRAWING ONLY, BOOM WING, 48M RH	REV 00

Rose Ends & Boom Stops, Second Stage Fold, LH, 48mt

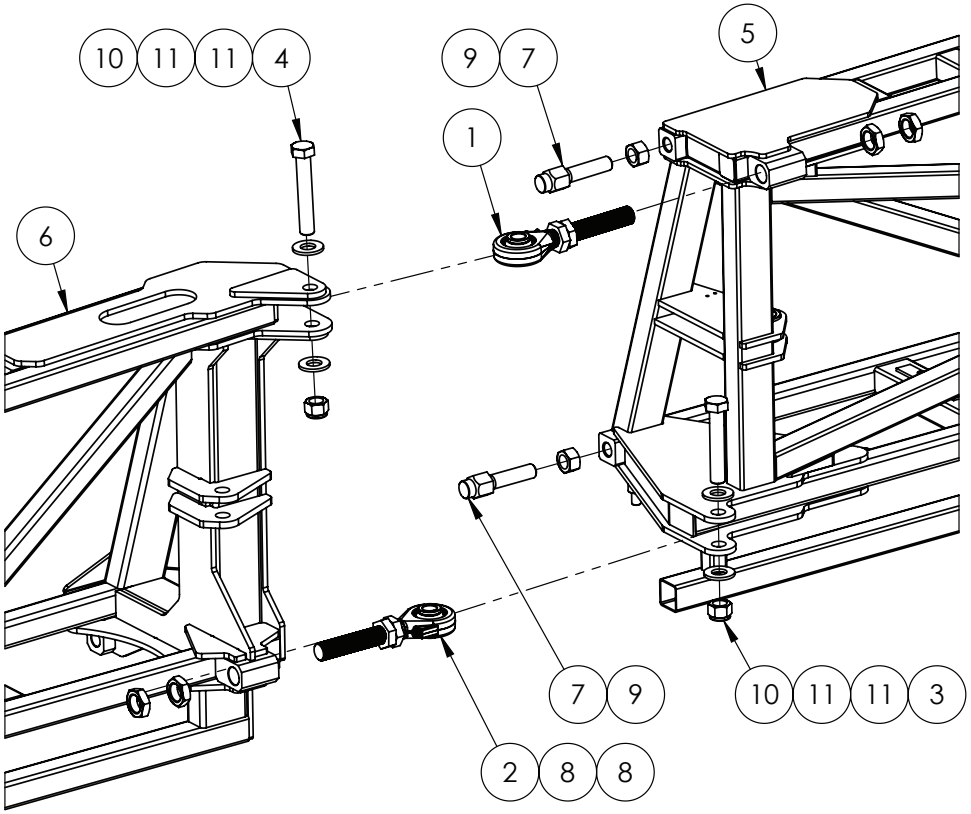

IF DESCRIPTION PREFIX IS ASSEMBLY DRAWING ONLY OR PRODUCTION DRAWING ONLY THE ITEM IS NOT FOR SALE			
ITEM	PART NUMBER	DESCRIPTION	QTY
1	GA4914385	ASSEMBLY DRAWING ONLY, ROSE END BEARING, BOOM 48M, FORGED, TOP	1
2	GA4914375	ASSEMBLY DRAWING ONLY, ROSE END BEARING, BOOM 48M, FORGED	1
3	GA5048175	BOLT 1" UNC X 5 1/2" GR8 ZP	1
4	GA5006033	BOLT 1" UNC X 6" GR8 ZP	1
5	GA4600635	BOOM WING, INNER, 48M, LH, STEEL	1
6	GA4603615	BOOM WING, MID, 48M, LH, ALUMINIUM, ANGLE OUTER FOLD	1
7	GA4572495	BOOM DRUM STOPPER BOLT 1" UNF 12 TPI	2
8	GA5010963	NUT 1 1/4" UNF 12 TPI LOCK ZP	4
9	GA5010991	NUT 1" HEX UNF 12 TPI ZP	2
10	GA5012439	NUT 1" NYLOC UNC ZP	2
11	GA5017659	WASHER 1" FLAT ZP HD	4
GA6101992-04 GOLDACRES		ASSEMBLY DRAWING ONLY, BOOM WING, 48M LH	REV 00

Rose Ends & Boom Stops, Second Stage Fold, RH, 48mt

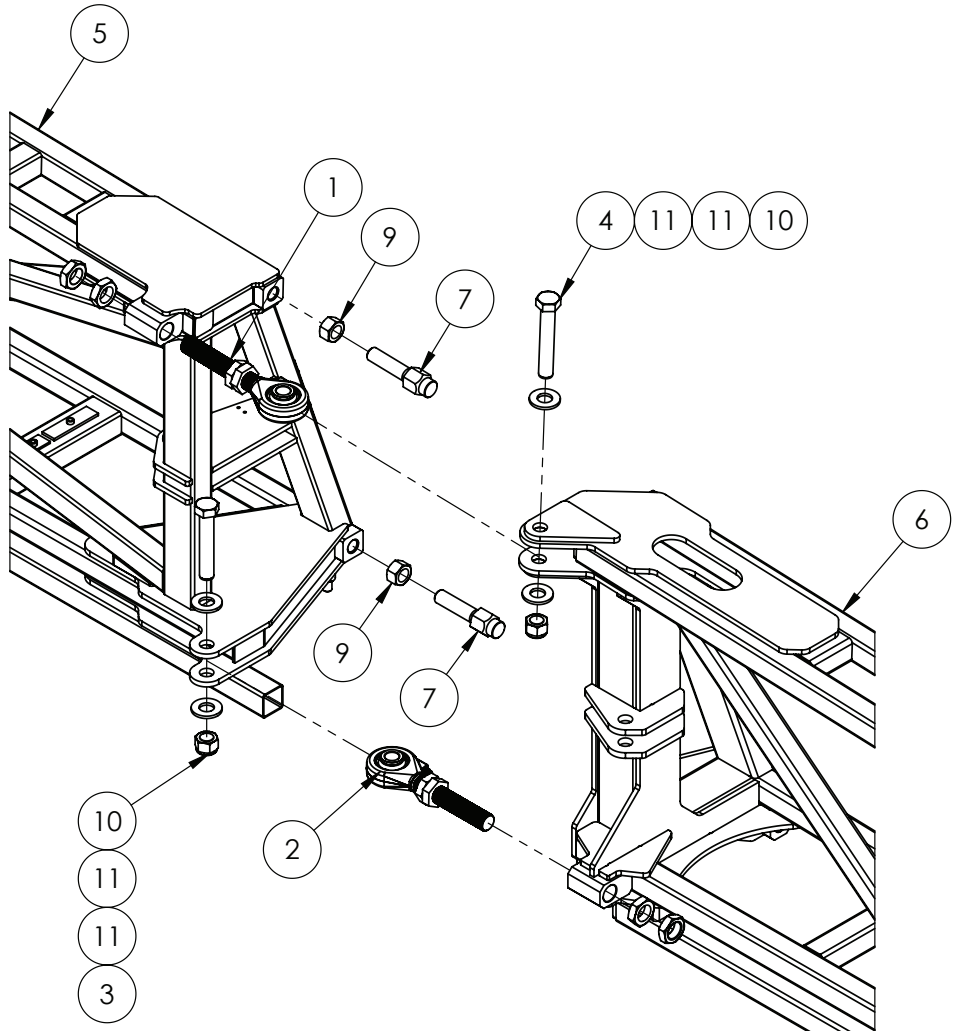

IF DESCRIPTION PREFIX IS ASSEMBLY DRAWING ONLY OR PRODUCTION DRAWING ONLY THE ITEM IS NOT FOR SALE			
ITEM	PART NUMBER	DESCRIPTION	QTY.
1	GA4914385	ASSEMBLY DRAWING ONLY, ROSE END BEARING, BOOM 48M, FORGED, TOP	1
2	GA4914375	ASSEMBLY DRAWING ONLY, ROSE END BEARING, BOOM 48M, FORGED	1
3	GA5048175	BOLT 1" UNC X 5 1/2" GR8 ZP	1
4	GA5006033	BOLT 1" UNC X 6" GR8 ZP	1
5	GA4600640	BOOM WING, INNER, 48M, RH, STEEL	1
6	GA4603620	BOOM WING, MID, 48M, RH, ALUMINIUM, ANGLE OUTER FOLD	1
7	GA4572495	BOOM DRUM STOPPER BOLT 1" UNF 12 TPI	2
8	GA5010963	NUT 1 1/4" UNF 12 TPI LOCK ZP	4
9	GA5010991	NUT 1" HEX UNF 12 TPI ZP	2
10	GA5012439	NUT 1" NYLOC UNC ZP	2
11	GA5017659	WASHER 1" FLAT ZP HD	4
GA6101993-04 GOLDACRES		ASSEMBLY DRAWING ONLY, BOOM WING, 48M RH	REV 00

Rose End Assembly, Forged, Top

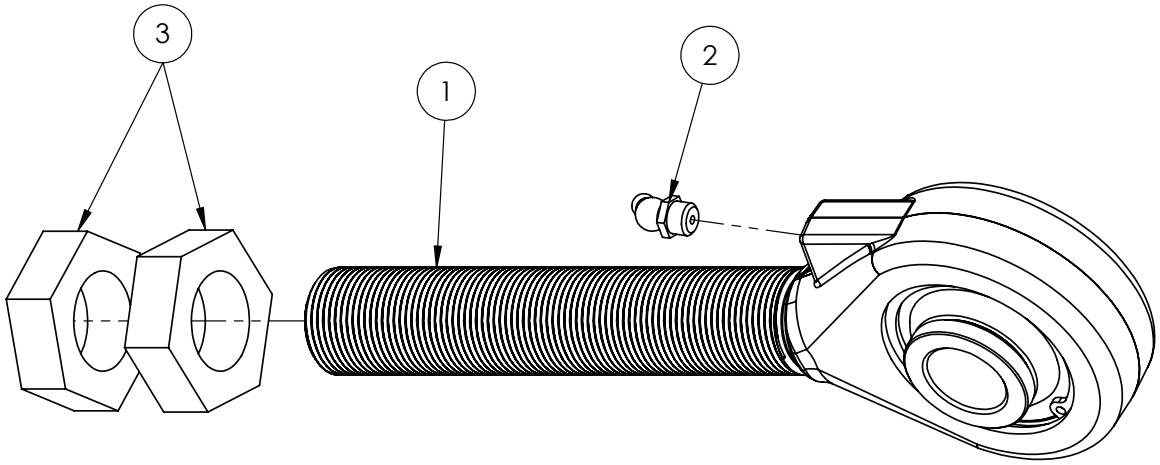

IF DESCRIPTION PREFIX IS ASSEMBLY DRAWING ONLY OR PRODUCTION DRAWING ONLY THE ITEM IS NOT FOR SALE			
ITEM	PART NUMBER	DESCRIPTION	QTY
1	GA5078654	BEARING END, ASSEMBLY, 1 1/4-12 UNF THREAD, C/W GEH 35 ES-2RS BEARING, BUSHED DIA. 25.5	1
2	GA5055125	GREASE NIPPLE, ELBOW, 45 DEGREE, 1/8 BSP MALE	1
3	GA5010963	NUT 1 1/4 UNF 12 TPI ZP LOCK NUT	2
GA4914385 GOLDACRES		ASSEMBLY DRAWING ONLY, ROSE END BEARING, BOOM 48M, FORGED, TOP	REV 00

Rose End Assembly, Forged, Bottom

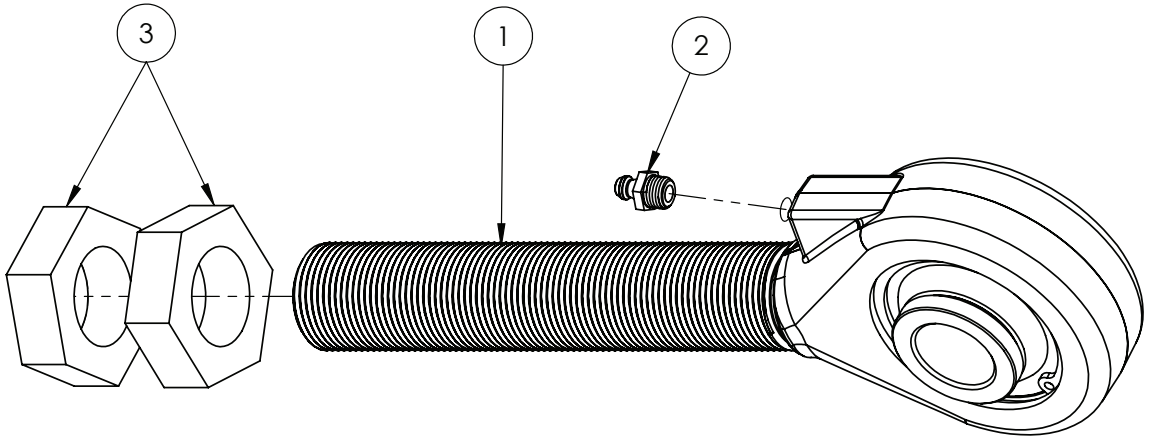

IF DESCRIPTION PREFIX IS ASSEMBLY DRAWING ONLY OR PRODUCTION DRAWING ONLY THE ITEM IS NOT FOR SALE			
ITEM	PART NUMBER	DESCRIPTION	QTY
1	GA5078654	BEARING END, ASSEMBLY, 1 1/4-12 UNF THREAD, C/W GEH 35 ES-2RS BEARING, BUSHED DIA. 25.5	1
2	GA5069980	GREASE NIPPLE, 1/8 BSPP, STRAIGHT	1
3	GA5010963	NUT 1 1/4 UNF 12 TPI ZP LOCK NUT	2
GA4914375 GOLDACRES		ASSEMBLY DRAWING ONLY, ROSE END BEARING, BOOM 48M, FORGED	REV 00

Nozzle Brackets, Inner, LH, 48mt

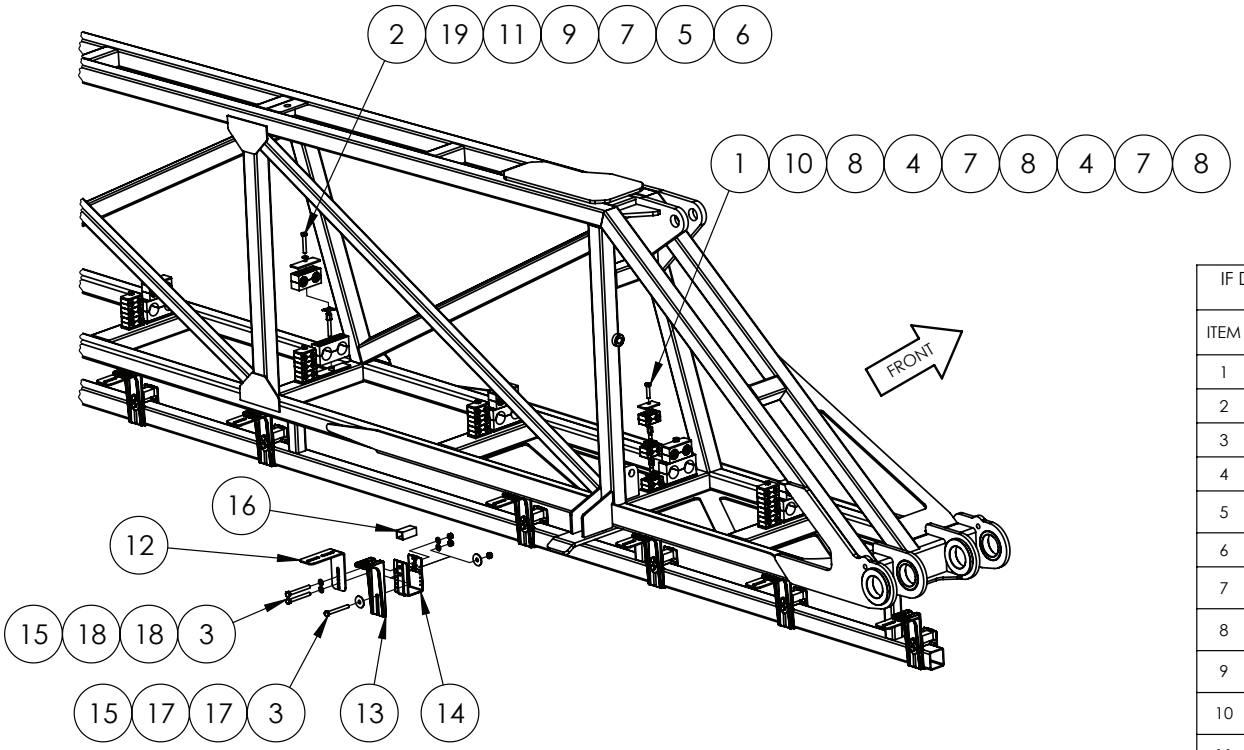

IF OPTION 65215 OR 65216 FIT
ITEM (13) & ASSOCIATED FASTENERS

IF OPTION 65217 FIT ITEMS (12)
& ASSOCIATED FASTENERS

IF DESCRIPTION PREFIX IS ASSEMBLY DRAWING ONLY OR PRODUCTION DRAWING ONLY THE ITEM IS NOT FOR SALE			
ITEM	PART NUMBER	DESCRIPTION	QTY.
1	GA5011481	BOLT M8 X 35 GR8.8 ZP	12
2	GA5004727	BOLT M8 X 50 GR8.8 ZP	12
3	GA5052600	BOLT M8 X 75 SS A2-70	54
4	GA5070740	BUILD UP BOLT, STACKING, M8 X 20 HYDAC	24
5	GA5070755	BUILD UP BOLT, STACKING, M8 X 47, WITH WASHER, HYDAC	12
6	GA5025535	JAW CLAMPS, PAIR, RCD-33.7	12
7	GA5070760	LOCKING PLATE SUIT HYDAC CLAMPS, BUILD UP BOLT, STACKING	36
8	GA5026356	MOUNTING CLAMP, DOUBLE TYPE, JAW, PAIR, GROUP 2, 15mm, RCD-15J	36
9	GA5078038	MOUNTING CLAMP, DOUBLE TYPE, JAW, PAIR, GROUP 4, 28mm, RCD-28J	12
10	GA5078042	MOUNTING CLAMP, DOUBLE TYPE, PLATE, TOP, GROUP 2, RCD-2PT	12
11	GA5078049	MOUNTING CLAMP, DOUBLE TYPE, PLATE, TOP, GROUP 4, RCD-4PT	12
12	GA4505515	NOZZLE BRACKET L LONG SS	18
13	GA5018258	NOZZLE BRACKET, PLASTIC, L SHAPE, LONG	18
14	GA5018259	NOZZLE BRACKET, PLASTIC, U SHAPE	18
15	GA5052590	NUT M8 NYLOC SS	54
16	GA5066965	SPACER SUIT NOZZLE BRACKETS	18
17	GA5003645	WASHER 5/16" X 1 1/4" FLAT SS	36
18	GA5003643	WASHER M8 FLAT SS HD	72
19	GA5004919	WASHER M8 SPRING SS	12
GA6101922-05 GOLDACRES		ASSEMBLY DRAWING ONLY, BOOM WING, 48M LH	REV 00.A

Nozzle Brackets, Inner, RH, 48mt

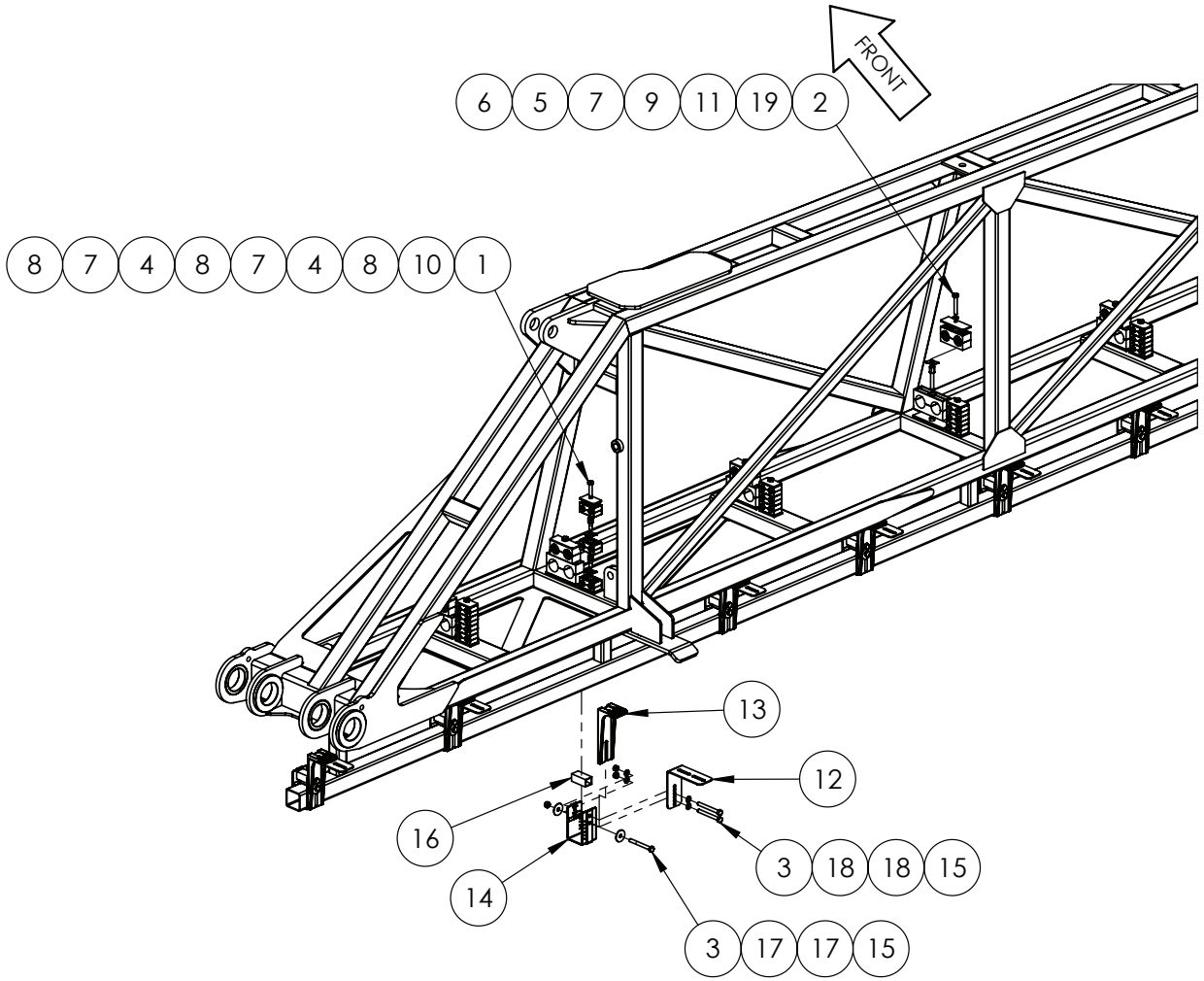

IF OPTION 65215 OR 65216 FIT
ITEM (13) & ASSOCICATED FASTENERS

IF OPTION 65217 FIT ITEM (12)
& ASSOCIATED FASTENERS

IF DESCRIPTION PREFIX IS ASSEMBLY DRAWING ONLY OR PRODUCTION DRAWING ONLY THE ITEM IS NOT FOR SALE			
ITEM	PART NUMBER	DESCRIPTION	QTY.
1	GA5011481	BOLT M8 X 35 GR8.8 ZP	12
2	GA5004727	BOLT M8 X 50 GR8.8 ZP	12
3	GA5052600	BOLT M8 X 75 SS A2-70	54
4	GA5070740	BUILD UP BOLT, STACKING, M8 X 20 HYDAC	24
5	GA5070755	BUILD UP BOLT, STACKING, M8 X 47, WITH WASHER, HYDAC	12
6	GA5025535	JAW CLAMPS, PAIR, RCD-33.7	12
7	GA5070760	LOCKING PLATE SUIT HYDAC CLAMPS, BUILD UP BOLT, STACKING	36
8	GA5026356	MOUNTING CLAMP, DOUBLE TYPE, JAW, PAIR, GROUP 2, 15mm, RCD-15J	36
9	GA5078038	MOUNTING CLAMP, DOUBLE TYPE, JAW, PAIR, GROUP 4, 28mm, RCD-28J	12
10	GA5078042	MOUNTING CLAMP, DOUBLE TYPE, PLATE, TOP, GROUP 2, RCD-2PT	12
11	GA5078049	MOUNTING CLAMP, DOUBLE TYPE, PLATE, TOP, GROUP 4, RCD-4PT	12
12	GA4505515	NOZZLE BRACKET L LONG SS	18
13	GA5018258	NOZZLE BRACKET, PLASTIC, L SHAPE, LONG	18
14	GA5018259	NOZZLE BRACKET, PLASTIC, U SHAPE	18
15	GA5052590	NUT M8 NYLOC SS	54
16	GA5066965	SPACER SUIT NOZZLE BRACKETS	18
17	GA5003645	WASHER 5/16" X 1 1/4" FLAT SS	36
18	GA5003643	WASHER M8 FLAT SS HD	72
19	GA5004919	WASHER M8 SPRING SS	12
GA6101993-05 GOLDACRES		ASSEMBLY DRAWING ONLY. BOOM WING 48M RH	REV 00.A

Recirculation Plumbing Bracketry, Inner, LH, 48mt

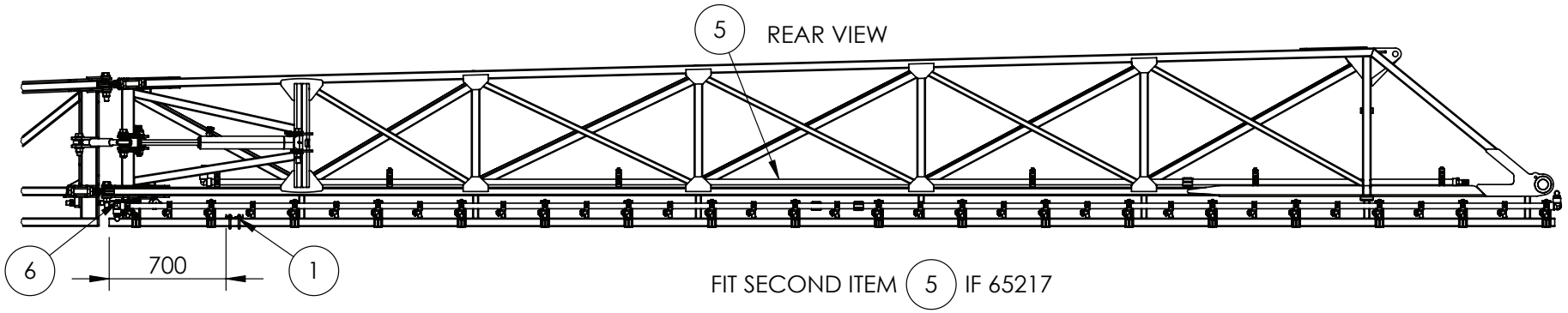

FIT SECOND ITEM (5) IF 65217

OPTIONED
TO REAR OF RCD CLAMP

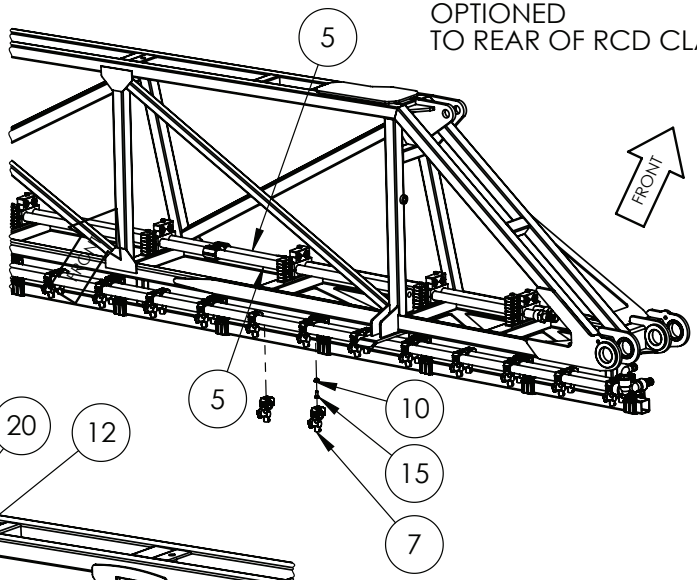

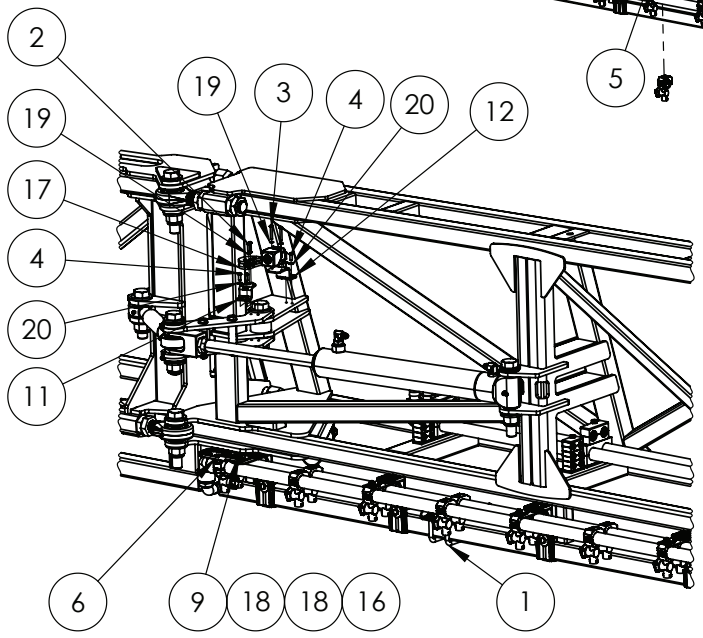

FIT SECOND ITEM (6) &
FASTENERS IF 65217 OPTIONED

IF DESCRIPTION PREFIX IS ASSEMBLY DRAWING ONLY OR PRODUCTION DRAWING ONLY THE ITEM IS NOT FOR SALE			
ITEM	PART NUMBER	DESCRIPTION	QTY.
1	GA4952700	ASSEMBLY DRAWING ONLY, BRACKET, SENSOR, RAVEN XRT, SUITS TRITECH MY23	1
2	GA0500004	BHCS M5 X 20 SS A2-70	2
3	GA0500142	BHCS M5 X 35 SS A2-70	2
4	GA5004050	BHCS M6 X 16 SS A2-70	4
5	GA4909654	BOOM POLY ASSEMBLY, 48M, INNER SECTION, BOOM RECIRCULATION	2
6	GA5018255	BRACKET, NOZZLE EXTENSION, PLASTIC	2
7	GA5077962	NOZZLE BODY, SINGLE, 1", TEEJET, QJ17560A-1-NYB	2
8	GA5052590	NUT M8 NYLOC SS	1
9	GA5004917	NUT M8 NYLOC ZP	1
10	GA5070710	NUT WITH FLANGE, PLASTIC, M8 X 1.25	36
11	GA4000549	PLATE, BOOM, BI-FOLD CAM MOUNT, S3	1
12	GA4000547	PLATE, BOOM, BI-FOLD SENSOR MOUNT, S3	1
13	GA3001176	SENSOR, INDUCTIVE ANALOGUE, 1-26mm, M12, IFM IM5141	1
14	GA5004085	SET SCREW M8 X 20 GR8.8 ZP	18
15	GA5052595	SET SCREW M8 X 20 SS A2-70	18
16	GA5004713	SET SCREW M8 X 25 SS A2-70	2
17	GA4000267	SNAIL CAM, SUIT FOLD SENSOR, S3	2
18	GA5003645	WASHER 5/16" X 1 1/4" FLAT SS	4
19	GA5003983	WASHER M5 FLAT SS	4
20	GA5004437	WASHER M6 FLAT SS HD	4
GA6101922-05 GOLDACRES		ASSEMBLY DRAWING ONLY, BOOM WING, 48M LH	REV 00.A

Recirculation Plumbing Bracketry, Inner, RH, 48mt

REAR VIEW

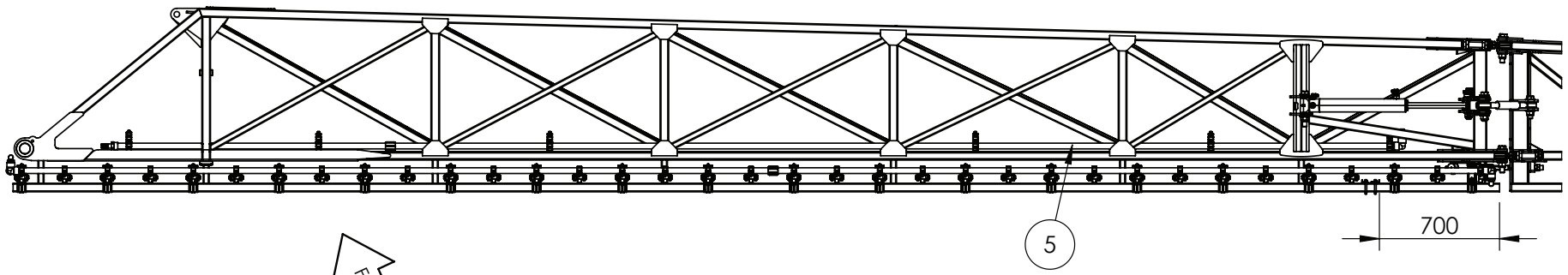

FIT SECOND ITEM (5) IF
65217 OPTIONED
TO REAR OF RCD CLAMP

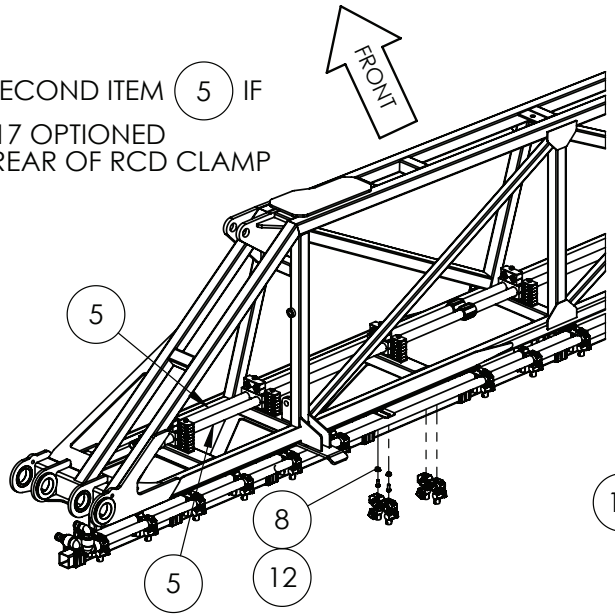

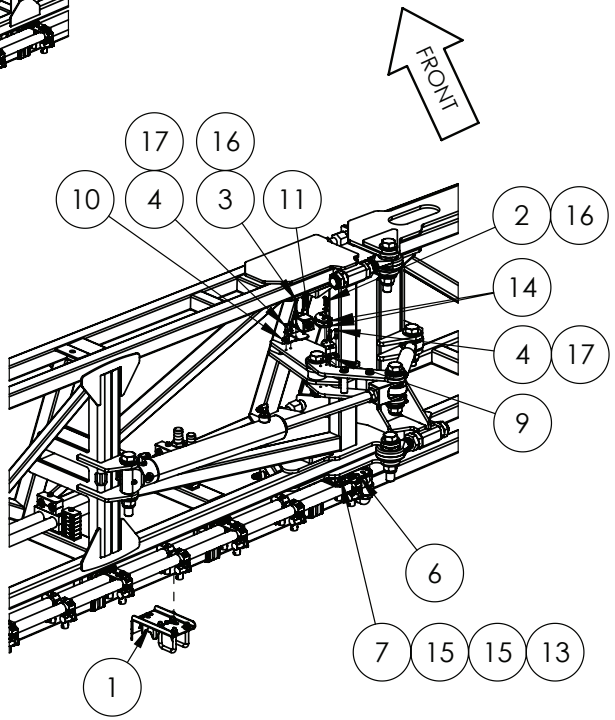

FIT SECOND ITEM (6) &
FASTENERS IF 65217 OPTIONED

IF DESCRIPTION PREFIX IS ASSEMBLY DRAWING ONLY OR PRODUCTION DRAWING ONLY THE ITEM IS NOT FOR SALE			
ITEM	PART NUMBER	DESCRIPTION	QTY.
1	GA4952700	ASSEMBLY DRAWING ONLY, BRACKET, SENSOR, RAVEN XRT, SUITS TRITECH MY23	1
2	GA0500178	BHCS M5 X 25 SS A2-70	2
3	GA0500142	BHCS M5 X 35 SS A2-70	2
4	GA5004050	BHCS M6 X 16 SS A2-70	4
5	GA4909654	BOOM POLY ASSEMBLY, 48M, INNER SECTION, BOOM RECIRCULATION	2
6	GA5018255	BRACKET, NOZZLE EXTENSION, PLASTIC	2
7	GA5052590	NUT M8 NYLOC SS	2
8	GA5070710	NUT WITH FLANGE, PLASTIC, M8 X 1.25	36
9	GA4000549	PLATE, BOOM, BI-FOLD CAM MOUNT, S3	1
10	GA4000547	PLATE, BOOM, BI-FOLD SENSOR MOUNT, S3	1
11	GA3001176	SENSOR, INDUCTIVE ANALOGUE, 1-26mm, M12, IFM IM5141	1
12	GA5052595	SET SCREW M8 X 20 SS A2-70	36
13	GA5004713	SET SCREW M8 X 25 SS A2-70	2
14	GA4000267	SNAIL CAM, SUIT FOLD SENSOR, S3	2
15	GA5003645	WASHER 5/16" X 1 1/4" FLAT SS	4
16	GA5003983	WASHER M5 FLAT SS	4
17	GA5004437	WASHER M6 FLAT SS HD	4
GA6101993-05 GOLDACRES		ASSEMBLY DRAWING ONLY. BOOM WING 48M RH	REV 00.A

Nozzle Brackets, LH, Mid, 48mt

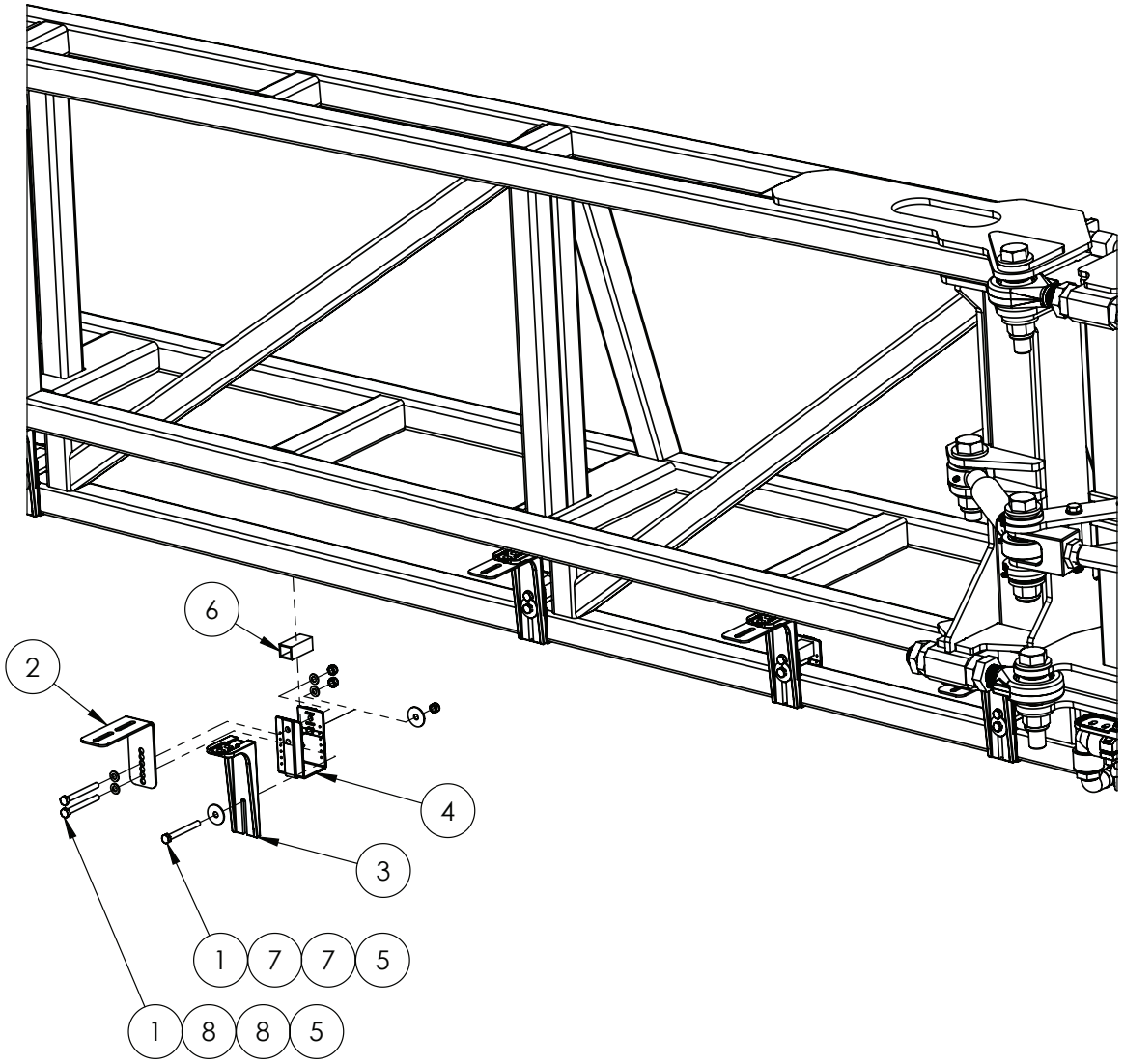

IF DESCRIPTION PREFIX IS ASSEMBLY DRAWING ONLY OR PRODUCTION DRAWING ONLY THE ITEM IS NOT FOR SALE			
ITEM	PART NUMBER	DESCRIPTION	QTY
1	GA5052600	BOLT M8 X 75 SS A2-70	48
2	GA4505515	NOZZLE BRACKET L LONG SS	16
3	GA5018258	NOZZLE BRACKET, PLASTIC, L SHAPE, LONG	16
4	GA5018259	NOZZLE BRACKET, PLASTIC, U SHAPE	16
5	GA5052590	NUT M8 NYLOC SS	48
6	GA5066965	SPACER SUIT NOZZLE BRACKETS	16
7	GA5003645	WASHER 5/16" X 1 1/4" FLAT SS	32
8	GA5003643	WASHER M8 FLAT SS HD	64
GA6101992-08 GOLDACRES		ASSEMBLY DRAWING ONLY, BOOM WING, 48M LH	REV 00

Nozzle Brackets, RH, Mid, 48mt

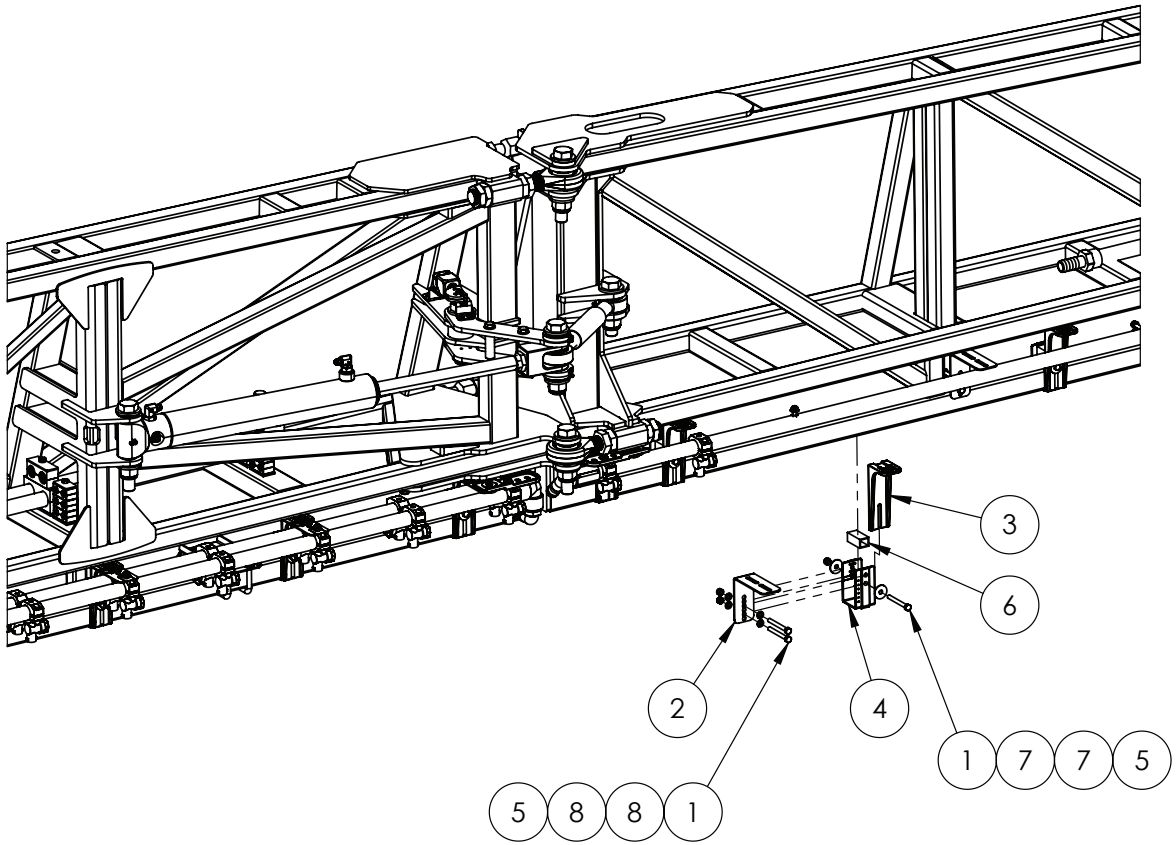

IF DESCRIPTION PREFIX IS ASSEMBLY DRAWING ONLY OR PRODUCTION DRAWING ONLY THE ITEM IS NOT FOR SALE			
ITEM	PART NUMBER	DESCRIPTION	QTY.
1	GA5052600	BOLT M8 X 75 SS A2-70	48
2	GA4505515	NOZZLE BRACKET L LONG SS	16
3	GA5018258	NOZZLE BRACKET, PLASTIC, L SHAPE, LONG	16
4	GA5018259	NOZZLE BRACKET, PLASTIC, U SHAPE	16
5	GA5052590	NUT M8 NYLOC SS	52
6	GA5066965	SPACER SUIT NOZZLE BRACKETS	16
7	GA5003645	WASHER 5/16" X 1 1/4" FLAT SS	40
8	GA5003643	WASHER M8 FLAT SS HD	64
GA6101993-08 GOLDACRES		ASSEMBLY DRAWING ONLY. BOOM WING 48M RH	REV 00

Recirculation Line & Nozzle Body Mounting, LH, Mid, 48mt

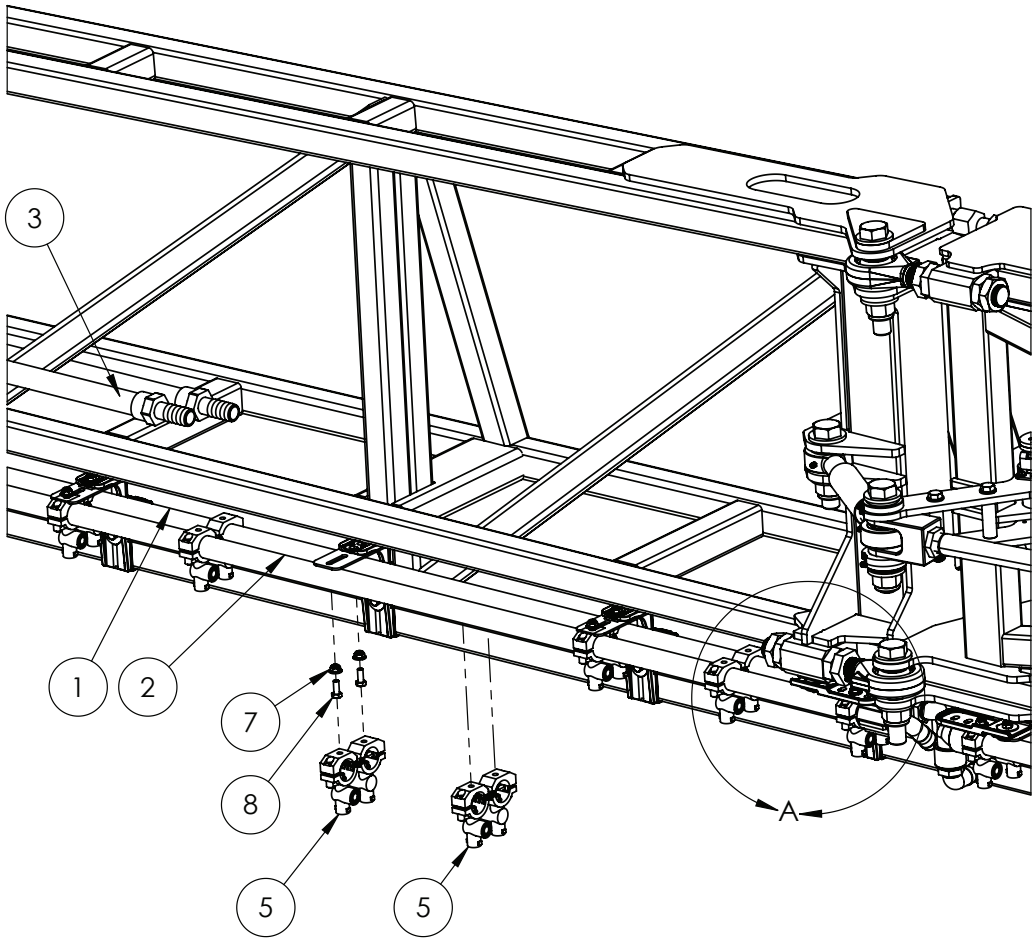

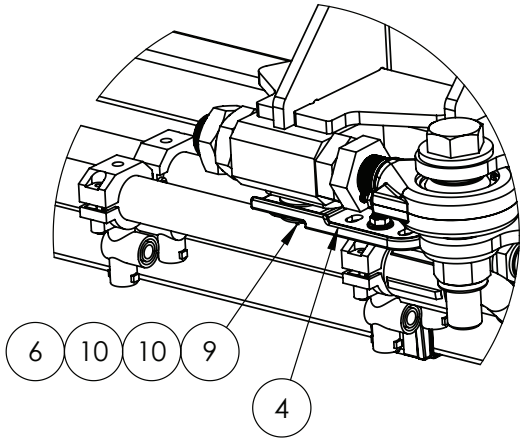

DETAIL A

IF DESCRIPTION PREFIX IS ASSEMBLY DRAWING ONLY OR PRODUCTION DRAWING ONLY THE ITEM IS NOT FOR SALE			
ITEM	PART NUMBER	DESCRIPTION	QTY.
1	GA4909687	BOOM POLY ASSEMBLY, BARE, 48M, LH MIDDLE	1
2	GA4909688	BOOM POLY ASSEMBLY, BARE, 48M, LH MIDDLE	1
3	GA4909657	BOOM POLY ASSEMBLY, 48M, MIDDLE SECTION, BOOM RECIRCULATION	2
4	GA5018255	BRACKET, NOZZLE EXTENSION, PLASTIC	4
5	GA5077962	NOZZLE BODY, SINGLE, 1", TEEJET, QJ17560A-1-NYB	64
6	GA5052590	NUT M8 NYLOC SS	4
7	GA5070710	NUT WITH FLANGE, PLASTIC, M8 X 1.25	32
8	GA5052595	SET SCREW M8 X 20 SS A2-70	32
9	GA5004713	SET SCREW M8 X 25 SS A2-70	4
10	GA5003645	WASHER 5/16" X 1 1/4" FLAT SS	8
GA6101992-08 GOLDACRES		ASSEMBLY DRAWING ONLY, BOOM WING, 48M LH	REV 00

Recirculation Line & Nozzle Body Mounting, RH, Mid, 48mt

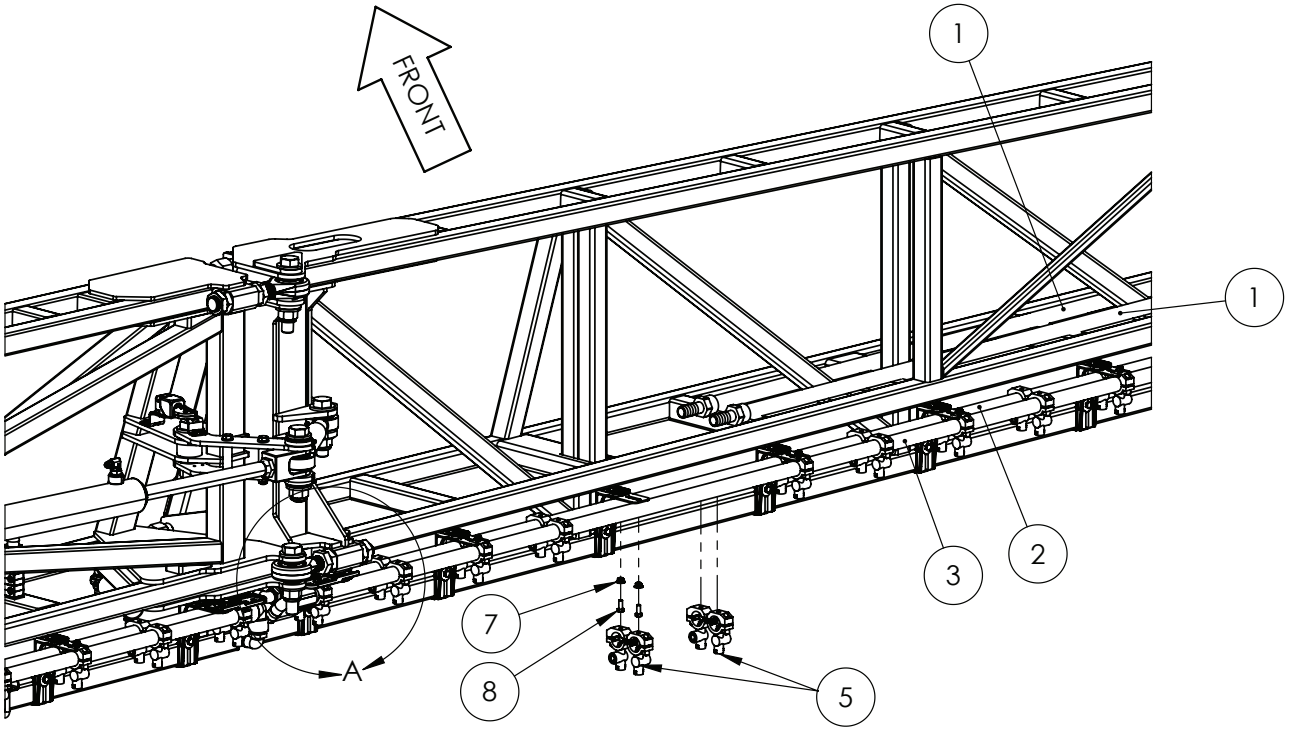

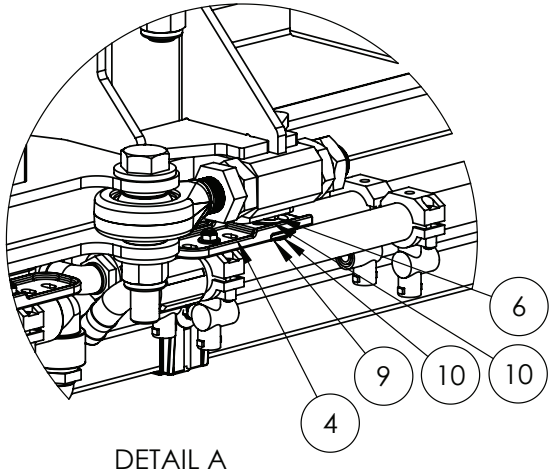

DETAIL A

IF DESCRIPTION PREFIX IS ASSEMBLY DRAWING ONLY OR PRODUCTION DRAWING ONLY THE ITEM IS NOT FOR SALE			
ITEM	PART NUMBER	DESCRIPTION	QTY.
1	GA4909657	BOOM POLY ASSEMBLY, 48M, MIDDLE SECTION, BOOM RECIRCULATION	2
2	GA4909668	BOOM POLY ASSEMBLY. BARE, RH MIDDLE, 48M	1
3	GA4909669	BOOM POLY ASSEMBLY. BARE, RH MIDDLE, 48M	1
4	GA5018255	BRACKET, NOZZLE EXTENSION, PLASTIC	2
5	GA5077962	NOZZLE BODY, SINGLE, 1", TEEJET, QJ17560A-1-NYB	64
6	GA5052590	NUT M8 NYLOC SS	4
7	GA5070710	NUT WITH FLANGE, PLASTIC, M8 X 1.25	32
8	GA5052595	SET SCREW M8 X 20 SS A2-70	19
9	GA5004713	SET SCREW M8 X 25 SS A2-70	4
10	GA5003645	WASHER 5/16" X 1 1/4" FLAT SS	8
GA6101993-08 GOLDACRES		ASSEMBLY DRAWING ONLY. BOOM WING 48M RH	REV 00

Third Stage Fold, Rose Ends, LH, 48mt

REAR VIEW

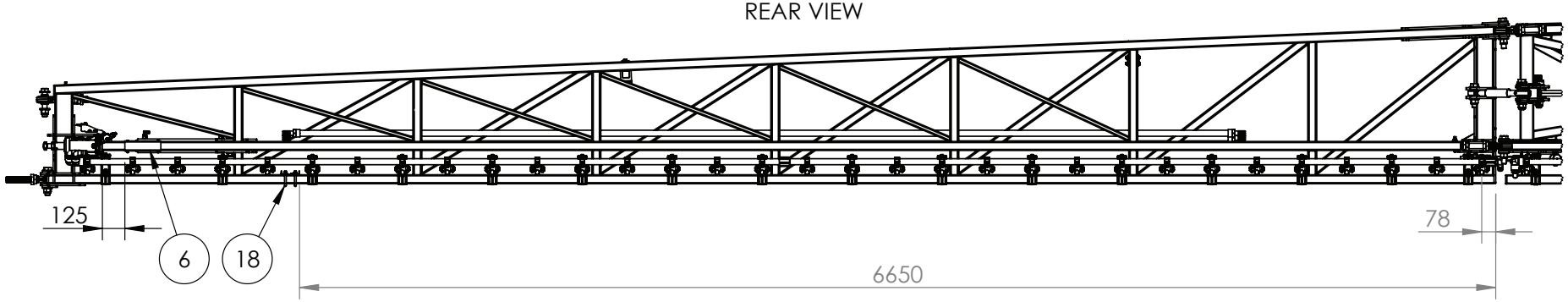

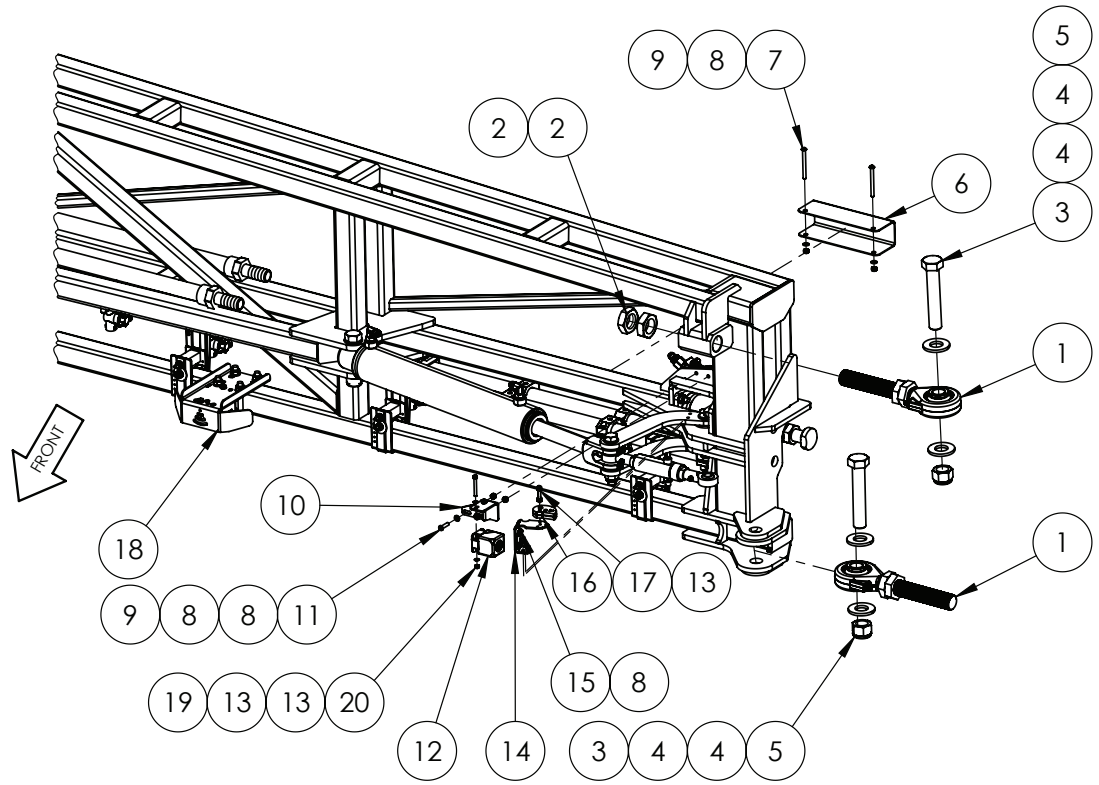

IF DESCRIPTION PREFIX IS ASSEMBLY DRAWING ONLY OR PRODUCTION DRAWING ONLY THE ITEM IS NOT FOR SALE			
ITEM	PART NUMBER	DESCRIPTION	QTY.
1	GA4914375	ASSEMBLY DRAWING ONLY, ROSE END BEARING, BOOM 48M, FORGED	2
2	GA5010963	NUT 1 1/4" UNF 12 TPI LOCK ZP	2
3	GA5048175	BOLT 1" UNC X 5 1/2" GR8 ZP	2
4	GA5017659	WASHER 1" FLAT ZP HD	4
5	GA5012439	NUT 1" NYLOC UNC ZP	2
6	F70294A	PROTECTOR, BOOM CORD, SUIT 50 X 50, 200mm, SS	1
7	GA0500067	BHCS M6 X 65 GR12.9 ZP	2
8	GA5004437	WASHER M6 FLAT SS HD	8
9	GA5048115	NUT M6 NYLOC ZP	4
10	GA4000862	PLATE, FOLD SENSOR BRACKET LH, 48m BOOM	1
11	GA5004067	BHCS M6 X 25 SS A2-70	2
12	GA3001176	SENSOR, INDUCTIVE ANALOGUE, 1-26mm, M12, IFM IM5141	1
13	GA5003983	WASHER M5 FLAT SS	6
14	GA4000372	PLATE, BOOM, BI-FOLD CAM MOUNT, S3	1
15	GA5004050	BHCS M6 X 16 SS A2-70	2
16	GA4000867	PLATE, SNAIL CAM, SMALL, SUIT FOLD SENSOR, S3	2
17	GA0500004	BHCS M5 X 20 SS A2-70	2
18	GA4952700	ASSEMBLY DRAWING ONLY, BRACKET, SENSOR, RAVEN XRT, SUITS TRITECH MY23	1
19	GA5003603	SHCS M5 X 40 GR12.9 ZP	2
20	GA5003975	NUT M5 NYLOC SS	2
GA6101922-09 GOLDACRES		ASSEMBLY DRAWING ONLY, BOOM WING, 48M LH	REV 01

Third Stage Fold, Rose Ends, RH, 48mt

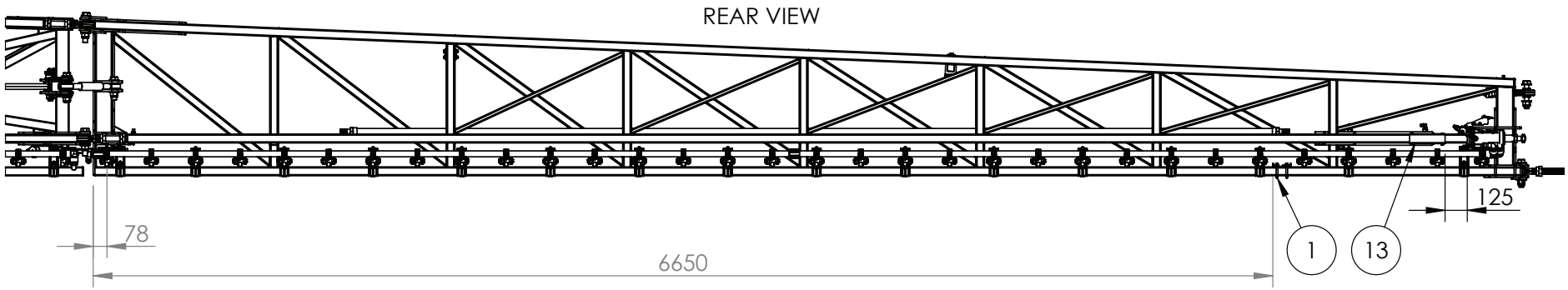

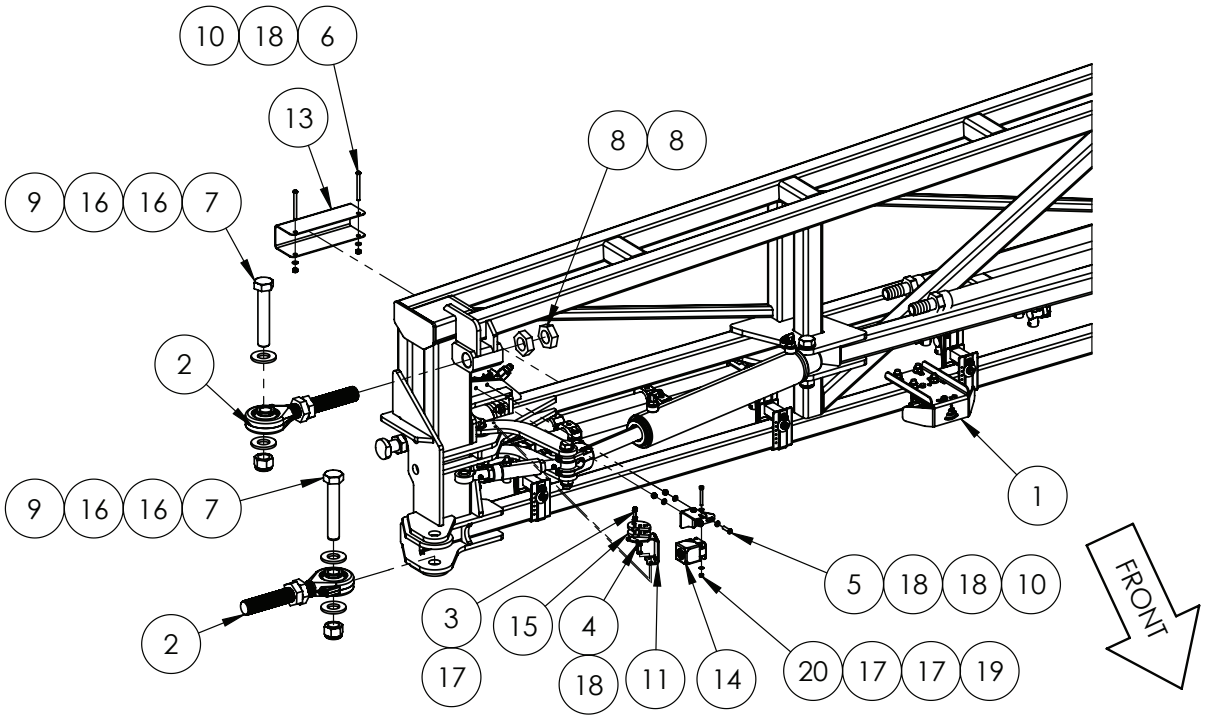

IF DESCRIPTION PREFIX IS ASSEMBLY DRAWING ONLY OR PRODUCTION DRAWING ONLY THE ITEM IS NOT FOR SALE			
ITEM	PART NUMBER	DESCRIPTION	QTY.
1	GA4952700	ASSEMBLY DRAWING ONLY, BRACKET, SENSOR, RAVEN XRT, SUITS TRITECH MY23	1
2	GA4914375	ASSEMBLY DRAWING ONLY, ROSE END BEARING, BOOM 48M, FORGED	2
3	GA0500202	BHCS M5 X 16 SS A2-70	2
4	GA5004050	BHCS M6 X 16 SS A2-70	2
5	GA5004067	BHCS M6 X 25 SS A2-70	2
6	GA0500067	BHCS M6 X 65 GR12.9 ZP	2
7	GA5048175	BOLT 1" UNC X 5 1/2" GR8 ZP	2
8	GA5010963	NUT 1 1/4 UNF 12 TPI ZP LOCK NUT	2
9	GA5012439	NUT 1" NYLOC UNC ZP	2
10	GA5048115	NUT M6 NYLOC ZP	4
11	GA4000372	PLATE, BOOM, BI-FOLD CAM MOUNT, S3	1
12	GA4000863	PLATE, FOLD SENSOR BRACKET RH, 48m BOOM	1
13	F70294A	PROTECTOR, BOOM CORD, SUIT 50 X 50, 200mm, SS	1
14	GA3001176	SENSOR, INDUCTIVE ANALOGUE, 1-26mm, M12, IFM IM5141	1
15	GA4000867	PLATE, SNAIL CAM, SMALL, SUIT FOLD SENSOR, S3	2
16	GA5017659	WASHER 1" FLAT ZP HD	4
17	GA5003983	WASHER M5 FLAT SS	6
18	GA5004437	WASHER M6 FLAT SS HD	8
19	GA5003603	SHCS M5 X 40 GR12.9 ZP	2
20	GA5003975	NUT M5 NYLOC SS	2
GA6101993-09 GOLDACRES		ASSEMBLY DRAWING ONLY, BOOM WING, 48M RH	REV 01

3rd Stage Fold, LH, 48mt

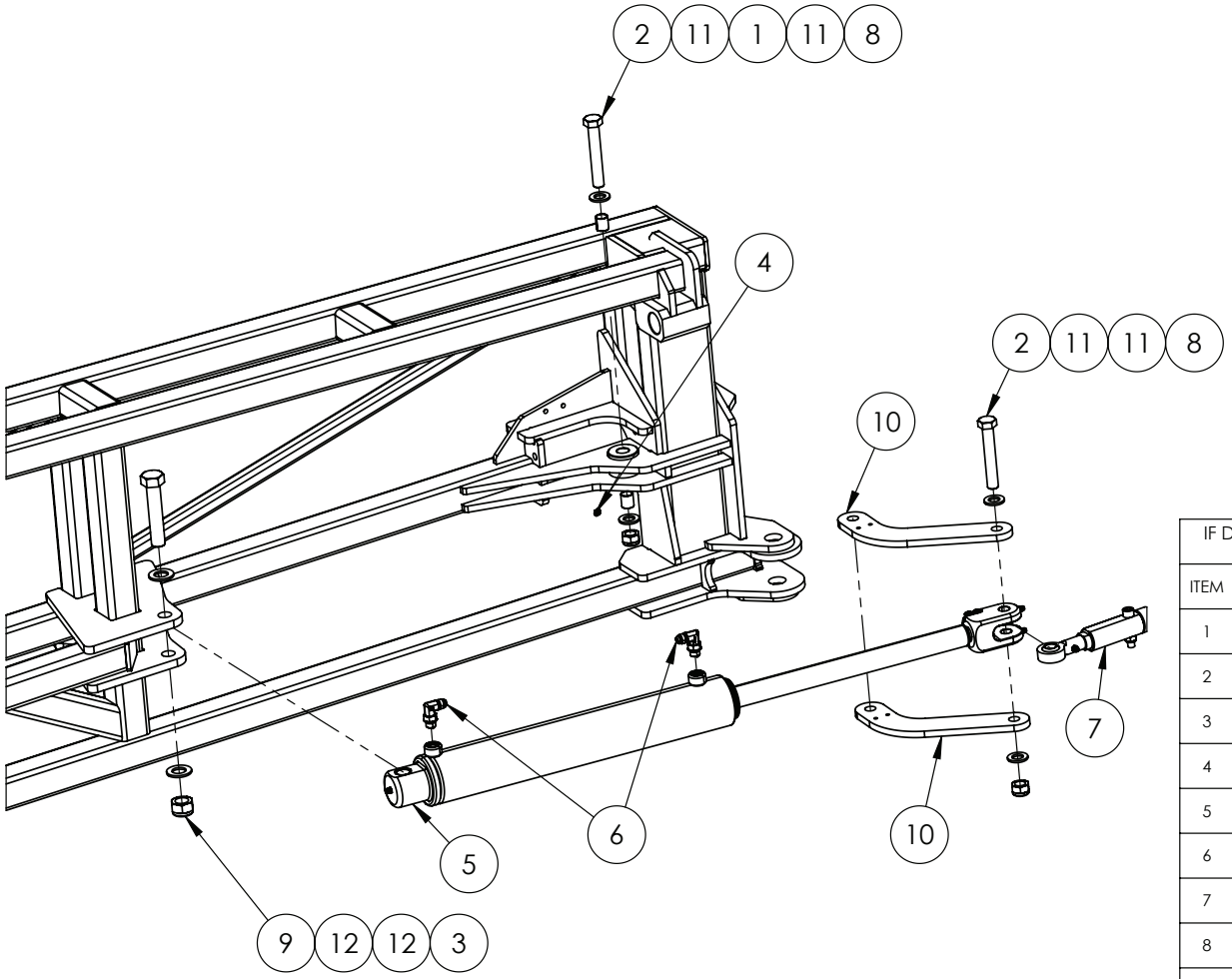

IF DESCRIPTION PREFIX IS ASSEMBLY DRAWING ONLY OR PRODUCTION DRAWING ONLY THE ITEM IS NOT FOR SALE			
ITEM	PART NUMBER	DESCRIPTION	QTY
1	GA1700013	BEARING, GLACIER BUSH, 16mm ID X 20mm LONG	2
2	GA5011269	BOLT M16 X 100 GR8.8 ZP	2
3	GA5048355	BOLT M20 X 100 GR8.8 ZP	1
4	GA5050450	GREASE NIPPLE, 6mm	1
5	GA3501082	HYDRAULIC CYLINDER, 2.5" X 1.25" X 395, 3RD STAGE FOLD, 48m	1
6	GA3500716	HYDRAULIC ADAPTOR, ELBOW, 90 DEGREE, 9/16" JIC MALE X 9/16" UN MALE O-RING, S91-0909	2
7	GA4902265	LINK ASSEMBLY, THIRD STAGE FOLD, 48M BOOM	1
8	GA5001029	NUT M16 NYLOC ZP	2
9	GA5048125	NUT M20 NYLOC ZP	1
10	GA4401080	PLATE, FOLD LINK, OUTER FOLD, 48m BOOM	2
11	GA5001043	WASHER M16 FLAT SS HD	4
12	GA5001741	WASHER M20 FLAT SS HD	2
GA6101992-07 GOLDACRES		ASSEMBLY DRAWING ONLY, BOOM WING, 48M LH	REV 00

3rd Stage Fold, RH, 48mt

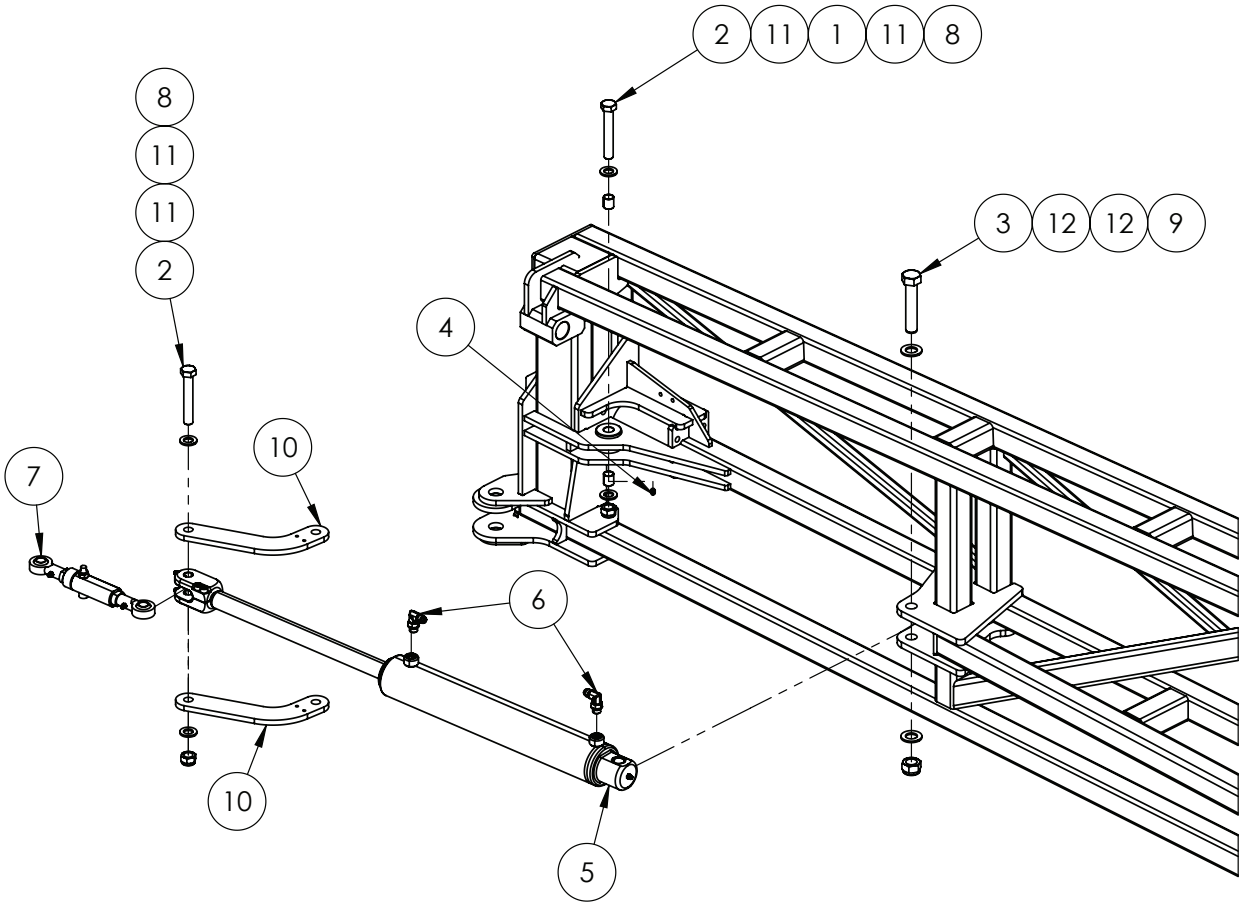

IF DESCRIPTION PREFIX IS ASSEMBLY DRAWING ONLY OR PRODUCTION DRAWING ONLY THE ITEM IS NOT FOR SALE			
ITEM	PART NUMBER	DESCRIPTION	QTY.
1	GA1700013	BEARING, GLACIER BUSH, 16mm ID X 20mm LONG	2
2	GA5011269	BOLT M16 X 100 GR8.8 ZP	2
3	GA5048355	BOLT M20 X 100 GR8.8 ZP	1
4	GA5050450	GREASE NIPPLE, 6mm	1
5	GA3501082	HYDRAULIC CYLINDER, 2.5" X 1.25" X 395, 3RD STAGE FOLD, 48m	1
6	GA3500716	HYDRAULIC ADAPTOR ELBOW, 9/16" UNO TO 9/16" JIC, 90 DEG, S91-0909	2
7	GA4902265	LINK ASSEMBLY, THIRD STAGE FOLD, 48M BOOM	1
8	GA5001029	NUT M16 NYLOC ZP	2
9	GA5048125	NUT M20 NYLOC ZP	1
10	GA4401080	PLATE, FOLD LINK, OUTER FOLD, 48m BOOM	2
11	GA5001043	WASHER M16 FLAT SS HD	4
12	GA5001741	WASHER M20 FLAT SS HD	2
GA6101993-07 GOLDACRES		ASSEMBLY DRAWING ONLY, BOOM WING, 48M RH	REV 00

Boom Link Assembly, 48mt

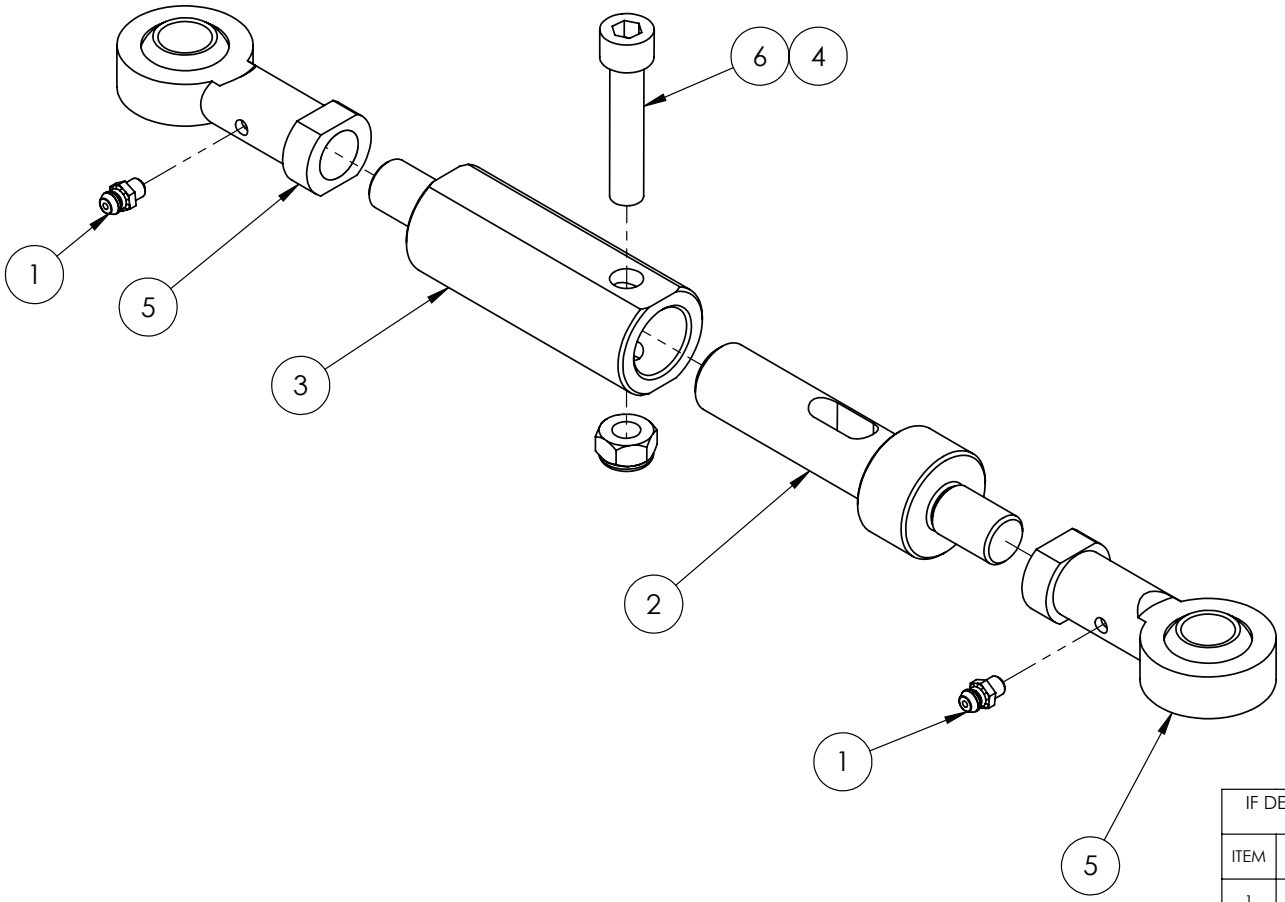

IF DESCRIPTION PREFIX IS ASSEMBLY DRAWING ONLY OR PRODUCTION DRAWING ONLY THE ITEM IS NOT FOR SALE			
ITEM	PART NUMBER	DESCRIPTION	QTY
1	GA5050450	GREASE NIPPLE, 6mm	2
2	GA4550905	LINK, INNER, THIRD FOLD, 48m BOOM	1
3	GA4550900	LINK, OUTER, THIRD FOLD, 48m BOOM	1
4	GA5000141	NUT M10 NYLOC ZP	1
5	GA5014469	ROD END FEMALE 16mm	2
6	GA5049990	SHCS M10 X 50 GR 12.9 ZP	1
GA4902265 GOLDACRES		LINK ASSEMBLY, THIRD STAGE FOLD, 48M BOOM	REV 00

Support Bracket & Boom Stopper, LH, 48mt

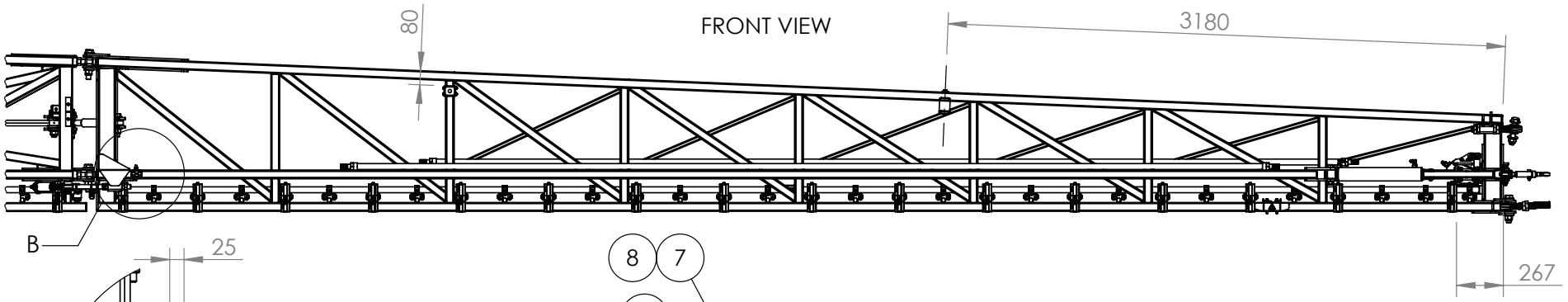

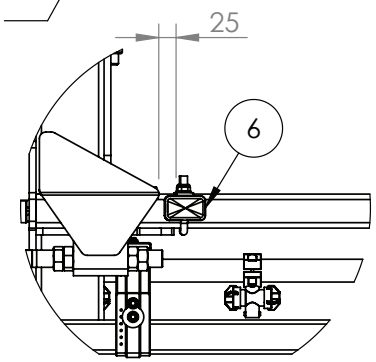

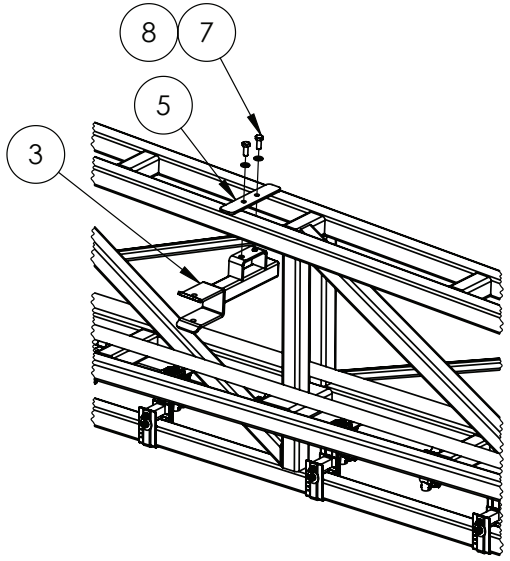

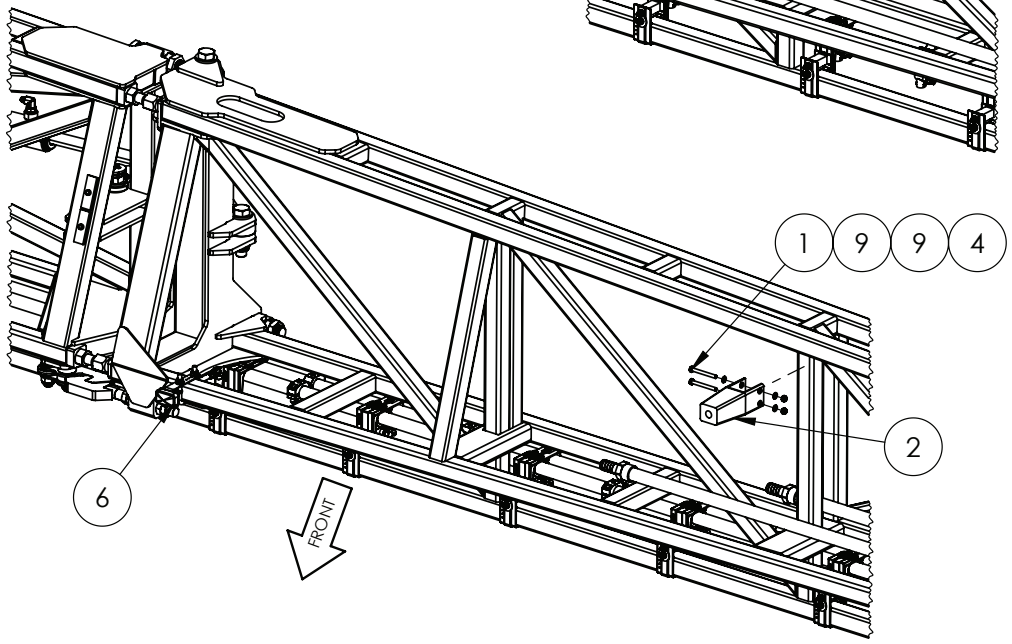

IF DESCRIPTION PREFIX IS ASSEMBLY DRAWING ONLY OR PRODUCTION DRAWING ONLY THE ITEM IS NOT FOR SALE			
ITEM	PART NUMBER	DESCRIPTION	QTY.
1	GA5052600	BOLT M8 X 75 SS A2-70	2
2	GA4908815	BOOM STOPPER 110mm LONG	1
3	GA4603651	BOOM SUPPORT BRACKET, 48M, OUTER WING, MY21	1
4	GA5004917	NUT M8 NYLOC ZP	2
5	GA4409765	PLATE, CLAMP, BOOM SUPPORT BRACKET, 48M, OUTER WING, MY21	1
6	GA4909629	PRODUCTION DRAWING ONLY, SIDE MARKER LIGHT ASSEM SUIT BOOM	1
7	GA5006161	SET SCREW M10 X 25 GR8.8 ZP	2
8	GA5000117	WASHER M10 FLAT SS HD	2
9	GA5003643	WASHER M8 FLAT SS HD	4
GA6101922-09 GOLDACRES		ASSEMBLY DRAWING ONLY, BOOM WING, 48M LH	REV 00

Support Bracket & Boom Stopper, RH, 48mt

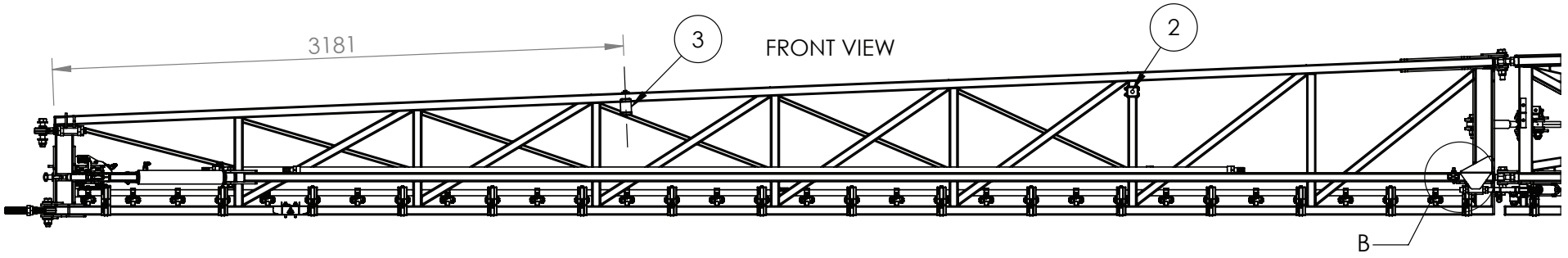

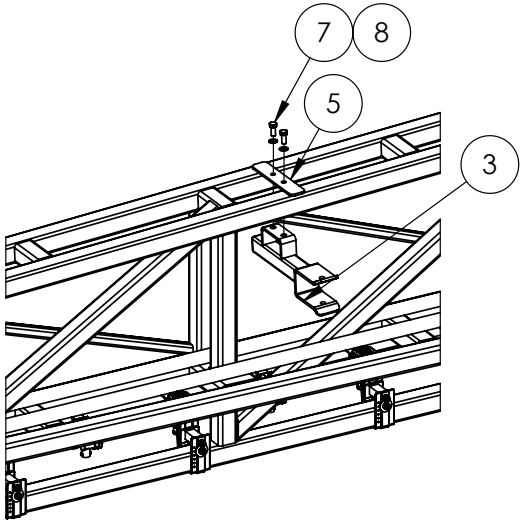

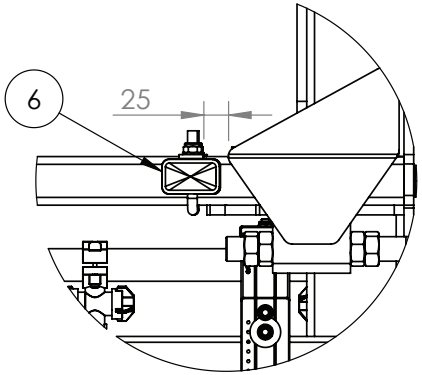

DETAIL B

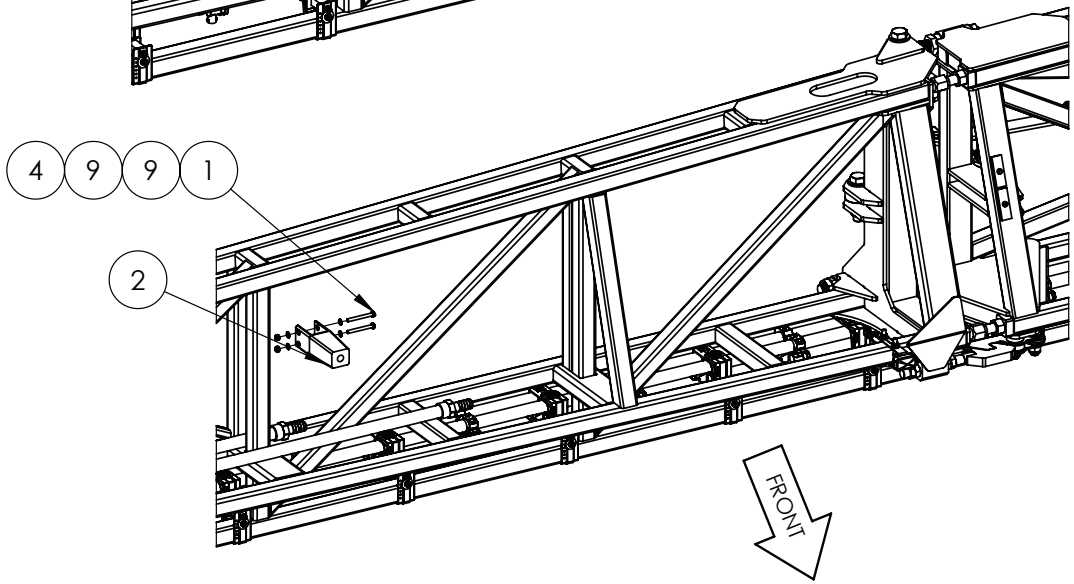

IF DESCRIPTION PREFIX IS ASSEMBLY DRAWING ONLY OR PRODUCTION DRAWING ONLY THE ITEM IS NOT FOR SALE			
ITEM	PART NUMBER	DESCRIPTION	QTY.
1	GA5052600	BOLT M8 X 75 SS A2-70	2
2	GA4908815	BOOM STOPPER 110mm LONG	1
3	GA4603651	BOOM SUPPORT BRACKET, 48M, OUTER WING, MY21	1
4	GA5004917	NUT M8 NYLOC ZP	2
5	GA4409765	PLATE, CLAMP, BOOM SUPPORT BRACKET, 48M, OUTER WING, MY21	1
6	GA4909629	PRODUCTION DRAWING ONLY, SIDE MARKER LIGHT ASSEM SUIT BOOM	1
7	GA5006161	SET SCREW M10 X 25 GR8.8 ZP	2
8	GA0500223	WASHER M30 FLAT	2
9	GA5003643	WASHER M8 FLAT SS HD	4
GA6101993-09 GOLDACRES		ASSEMBLY DRAWING ONLY, BOOM WING, 48M RH	REV 00

Third Stage Fold, Rose End Linkage, LH, 48mt

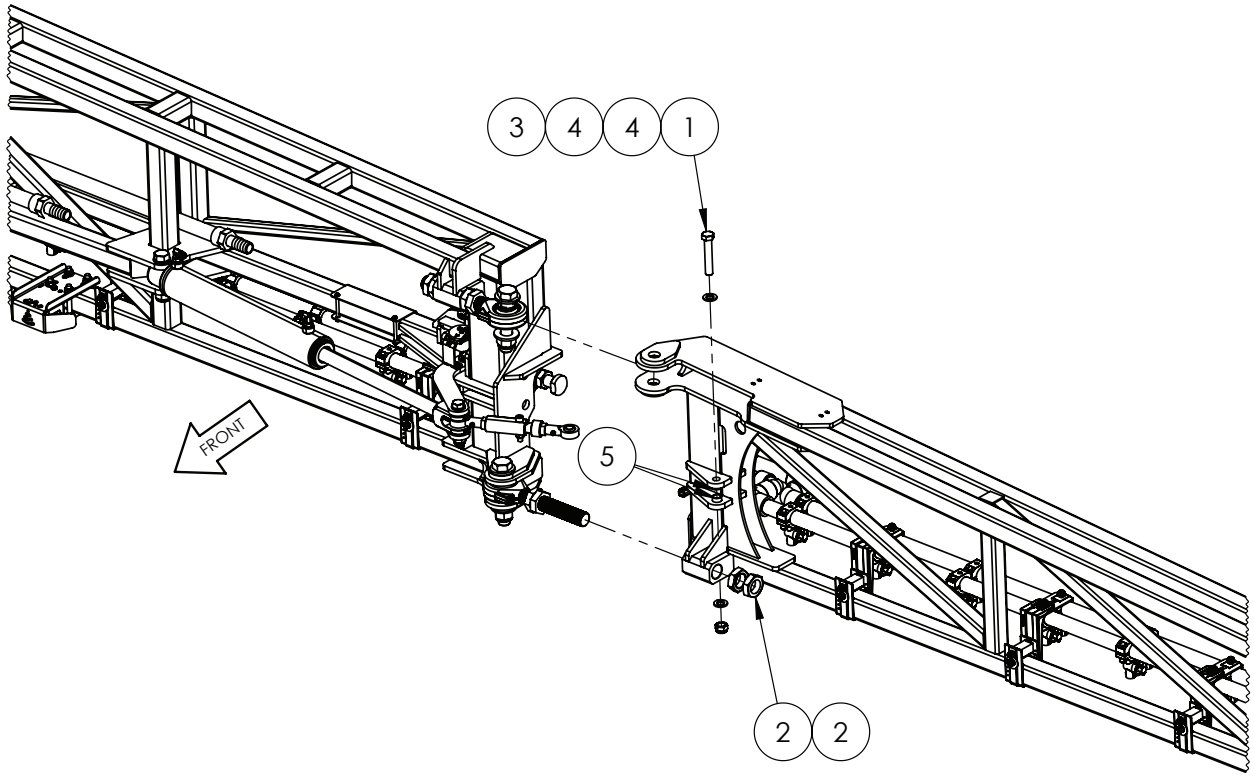

IF DESCRIPTION PREFIX IS ASSEMBLY DRAWING ONLY OR PRODUCTION DRAWING ONLY THE ITEM IS NOT FOR SALE			
ITEM	PART NUMBER	DESCRIPTION	QTY
1	GA5011297	BOLT M16 X 90 GR8.8 ZP	1
2	GA5010963	NUT 1 1/4" UNF 12 TPI LOCK ZP	2
3	GA5001029	NUT M16 NYLOC ZP	1
4	GA5001043	WASHER M16 FLAT SS HD	2
5	GA4552070	CRUSH TUBE 16.2X20.5X9.5	2
GA6101922-12 GOLDACRES		ASSEMBLY DRAWING ONLY, BOOM WING, 48M LH	REV 00

Third Stage Fold, Rose End Linkage, RH, 48mt

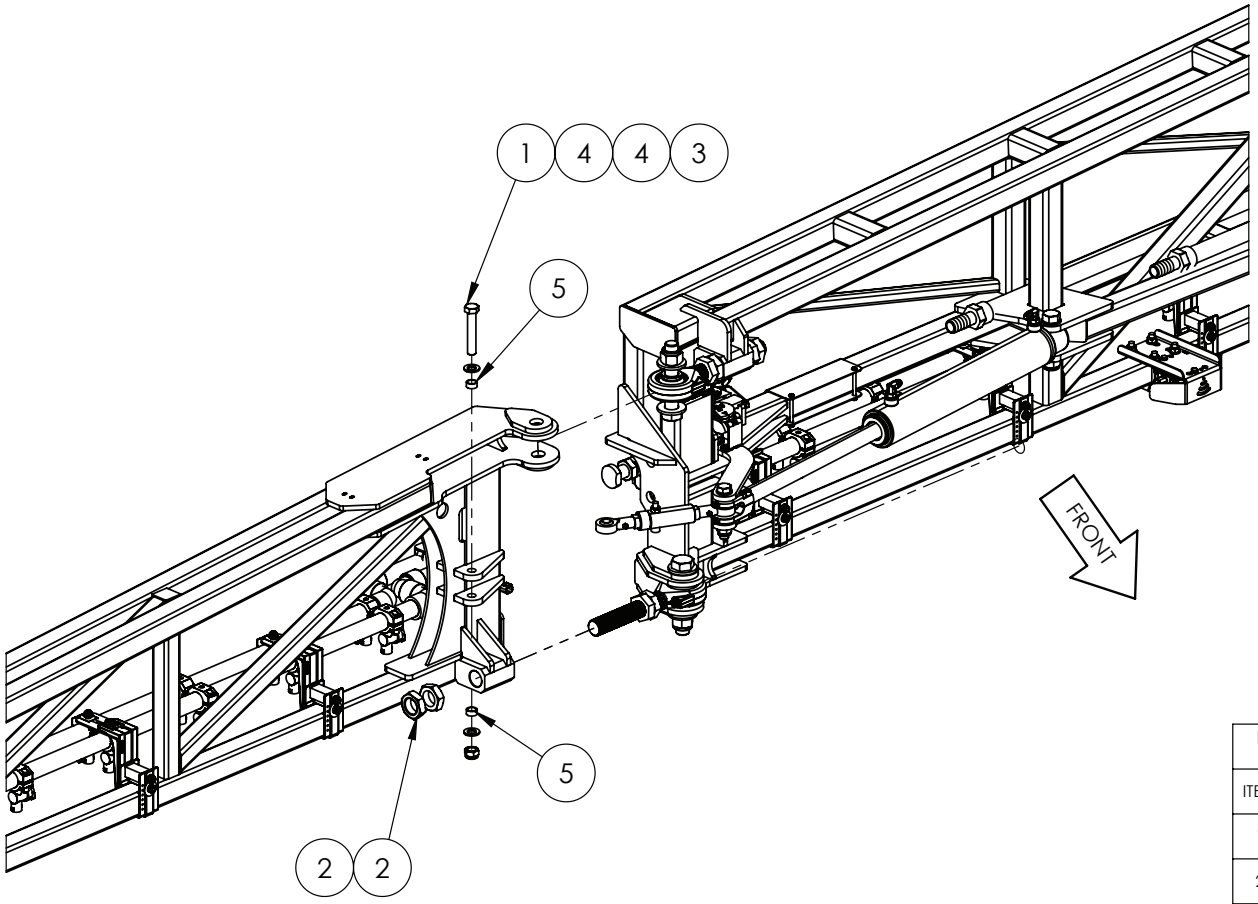

IF DESCRIPTION PREFIX IS ASSEMBLY DRAWING ONLY OR PRODUCTION DRAWING ONLY THE ITEM IS NOT FOR SALE			
ITEM	PART NUMBER	DESCRIPTION	QTY
1	GA5011297	BOLT M16 X 90 GR8.8 ZP	1
2	GA5010963	NUT 1 1/4" UNF 12 TPI LOCK ZP	2
3	GA5001029	NUT M16 NYLOC ZP	1
4	GA5001043	WASHER M16 FLAT SS HD	2
5	GA4552070	CRUSH TUBE 16.2X20.5X9.5	2
GA6101993-12 GOLDACRES		ASSEMBLY DRAWING ONLY. BOOM WING, 48M RH	REV 00

Hydraulic Cylinder Mounting, Third Stage Fold, LH, 48mt

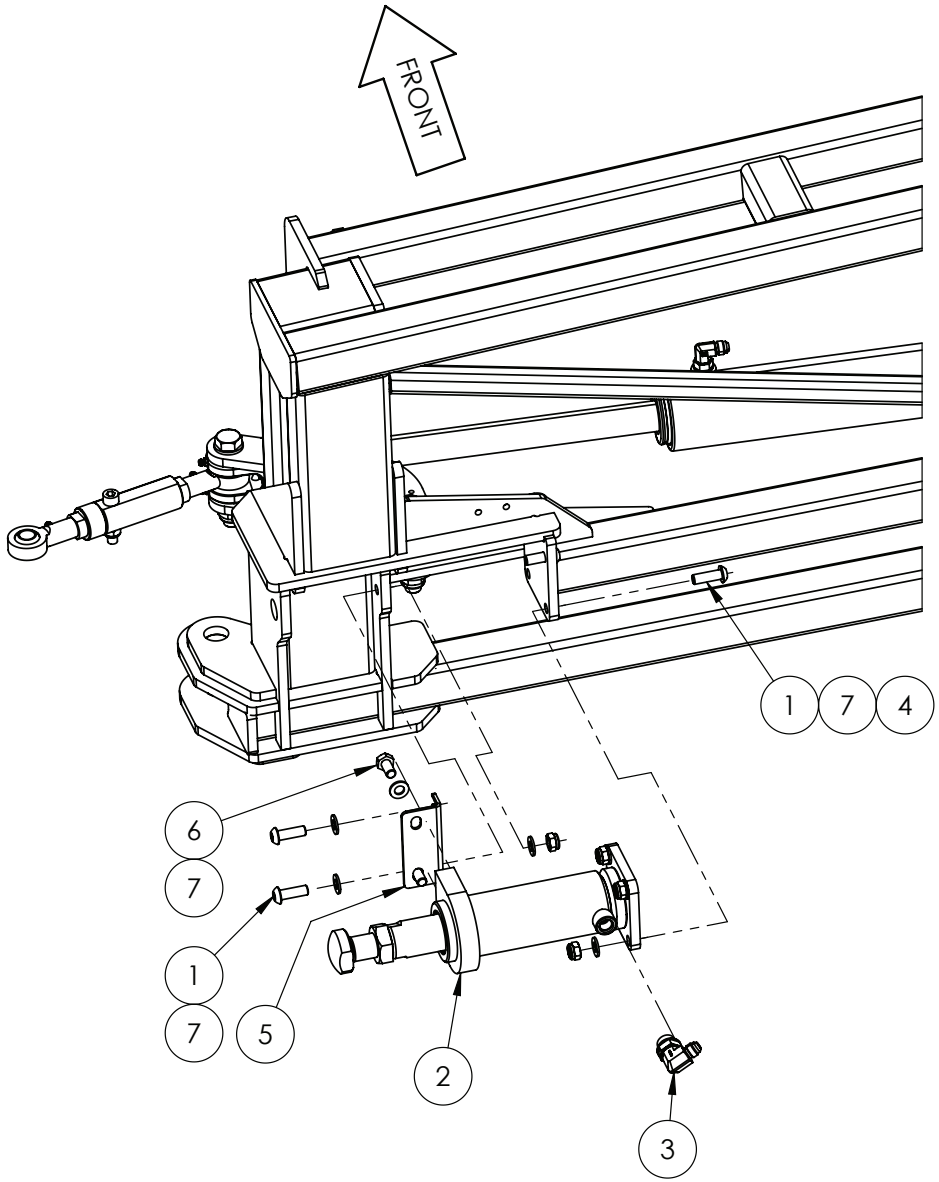

IF DESCRIPTION PREFIX IS ASSEMBLY DRAWING ONLY OR PRODUCTION DRAWING ONLY THE ITEM IS NOT FOR SALE			
ITEM	PART NUMBER	DESCRIPTION	QTY
1	GA5048120	BHCS M10 X 30 SS A2-70	6
2	GA3500479	HYDRAULIC CYLINDER, 2", BORE 1.5", ROD, 80mm STROKE, BREAKAWAY, 48M BOOM	1
3	GA3500700	HYDRAULIC ADAPTOR, ELBOW, 90 DEGREE, 9/16" JIC MALE X 3/4" UN MALE O-RING, S91-0912	1
4	GA5051445	NUT M10 NYLOC SS	6
5	GA4401860	PLATE, MOUNT BRACKET, BREAKAWAY CYLINDER SUPPORT, 48m BOOM	1
6	GA5006113	SET SCREW M10 X 20 GR8.8 ZP	2
7	GA5000117	WASHER M10 FLAT SS HD	10
GA6101992-07 GOLDACRES		ASSEMBLY DRAWING ONLY, BOOM WING, 48M LH	REV 00

Hydraulic Cylinder Mounting, Third Stage Fold, RH, 48mt

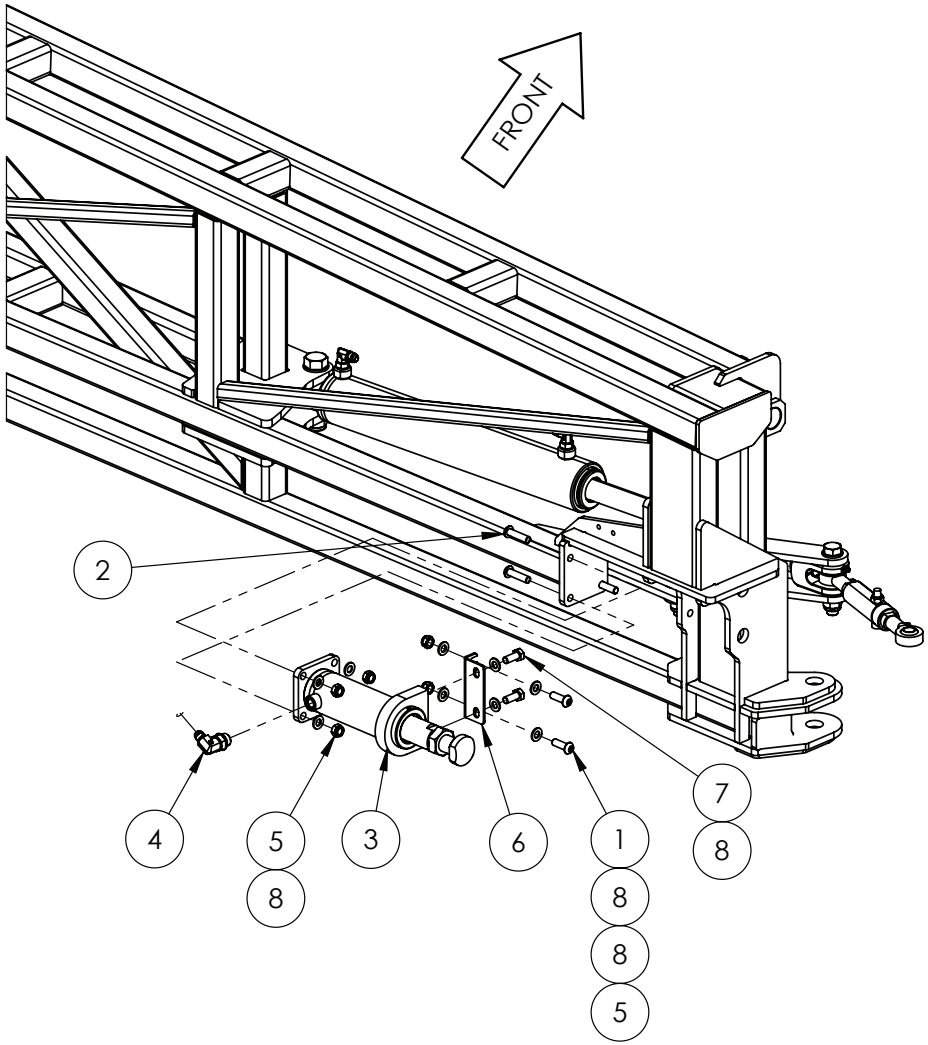

IF DESCRIPTION PREFIX IS ASSEMBLY DRAWING ONLY OR PRODUCTION DRAWING ONLY THE ITEM IS NOT FOR SALE			
ITEM	PART NUMBER	DESCRIPTION	QTY.
1	GA5048120	BHCS M10 X 30 SS A2-70	2
2	GA5006059	BHCS M10 X 40 GR12.9 ZP	4
3	GA3500479	HYDRAULIC CYLINDER, 2", BORE 1.5", ROD, 80mm STROKE, BREAKAWAY, 48M BOOM	1
4	GA3500700	HYDRAULIC ADAPTOR, ELBOW, 90 DEGREE, 9/16" JIC MALE X 3/4" UN MALE O-RING, S91-0912	1
5	GA5051445	NUT M10 NYLOC SS	6
6	GA4401860	PLATE, MOUNT BRACKET, BREAKAWAY CYLINDER SUPPORT, 48m BOOM	1
7	GA5066162	SET SCREW M10 X 25 SS A2-70	2
8	GA5000117	WASHER M10 FLAT SS HD	10
GA6101993-07 GOLDACRES		ASSEMBLY DRAWING ONLY, BOOM WING, 48M RH	REV 00

Nozzle Bracket Extensions & Clearance Light, LH, 48mt

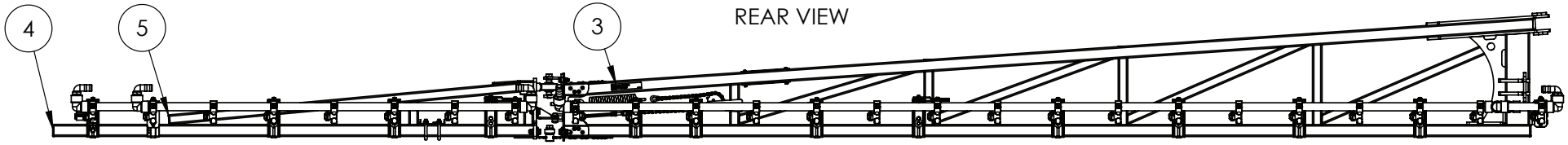

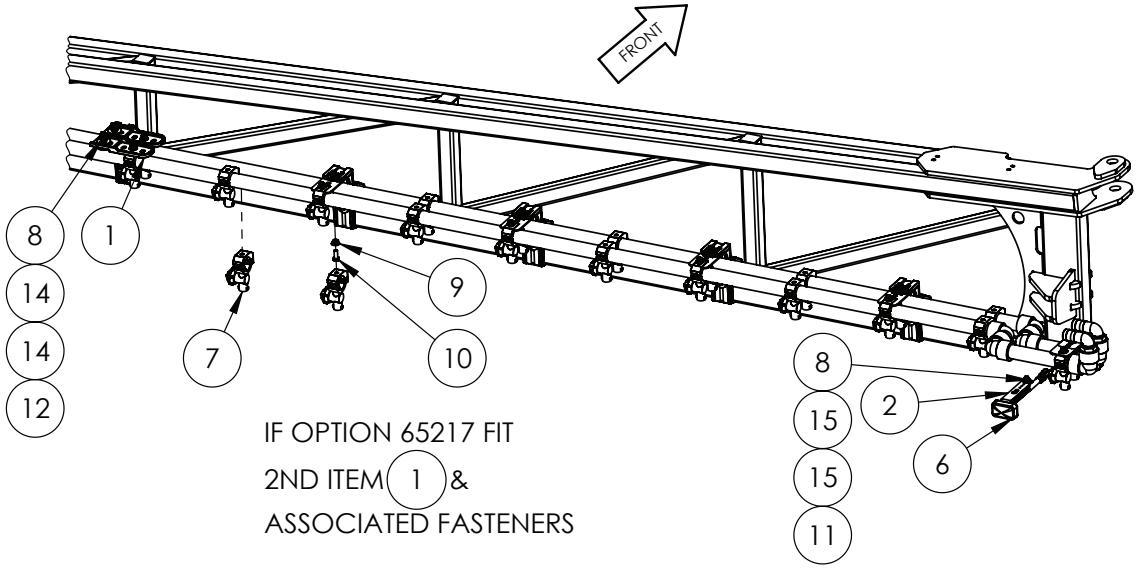

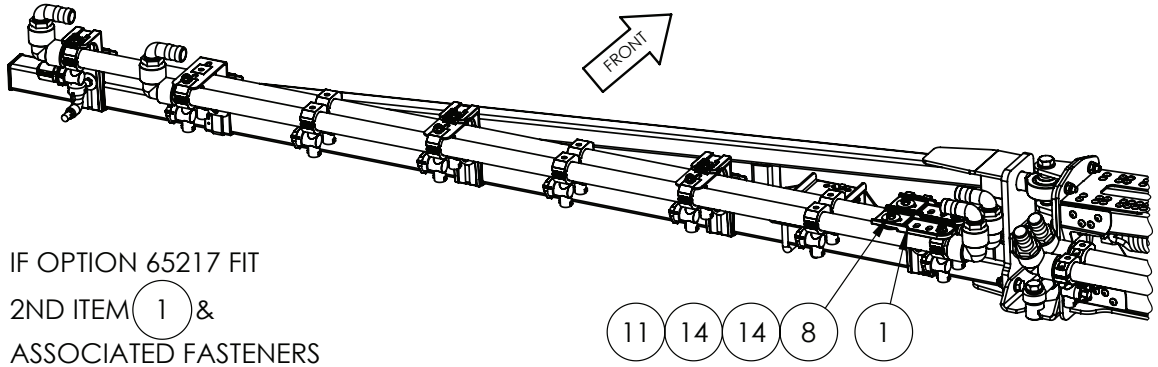

IF DESCRIPTION PREFIX IS ASSEMBLY DRAWING ONLY OR PRODUCTION DRAWING ONLY THE ITEM IS NOT FOR SALE			
ITEM	PART NUMBER	DESCRIPTION	QTY.
1	GA5018255	BRACKET, NOZZLE EXTENSION, PLASTIC	4
2	GA4000597	CLEARANCE LIGHT MOUNTING BRACKET SUIT BOOM	1
3	GA8701199	DECAL, BREAKAWAY LUBRICATION, LH	1
4	GA5024720	END CAP, PLASTIC, BLACK, INSERT, RHS. 50 X 50, 2.4 - 4.0mm WALL	1
5	GA5002963	INSERT 38X38MM CAP	1
6	GA3000267	LIGHT, LED, ORANGE, CLEARANCE, DEUTSCH CONNECTOR	1
7	GA5077962	NOZZLE BODY, SINGLE, 1", TEEJET, QJ17560A-1-NYB	2
8	GA5052590	NUT M8 NYLOC SS	5
9	GA5070710	NUT WITH FLANGE, PLASTIC, M8 X 1.25	26
10	GA5004085	SET SCREW M8 X 20 GR8.8 ZP	1
11	GA5052595	SET SCREW M8 X 20 SS A2-70	28
12	GA5004713	SET SCREW M8 X 25 SS A2-70	2
13	GA5066965	SPACER SUIT NOZZLE BRACKETS	1
14	GA5003645	WASHER 5/16" X 1 1/4" FLAT SS	8
15	GA5003643	WASHER M8 FLAT SS HD	2
GA6101922-03 GOLDACRES		ASSEMBLY DRAWING ONLY, BOOM WING, 48M LH	REV 00

Nozzle Bracket Extensions & Clearance Light, RH, 48mt

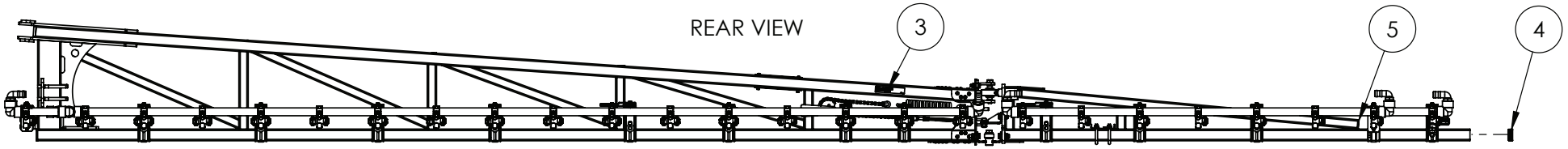

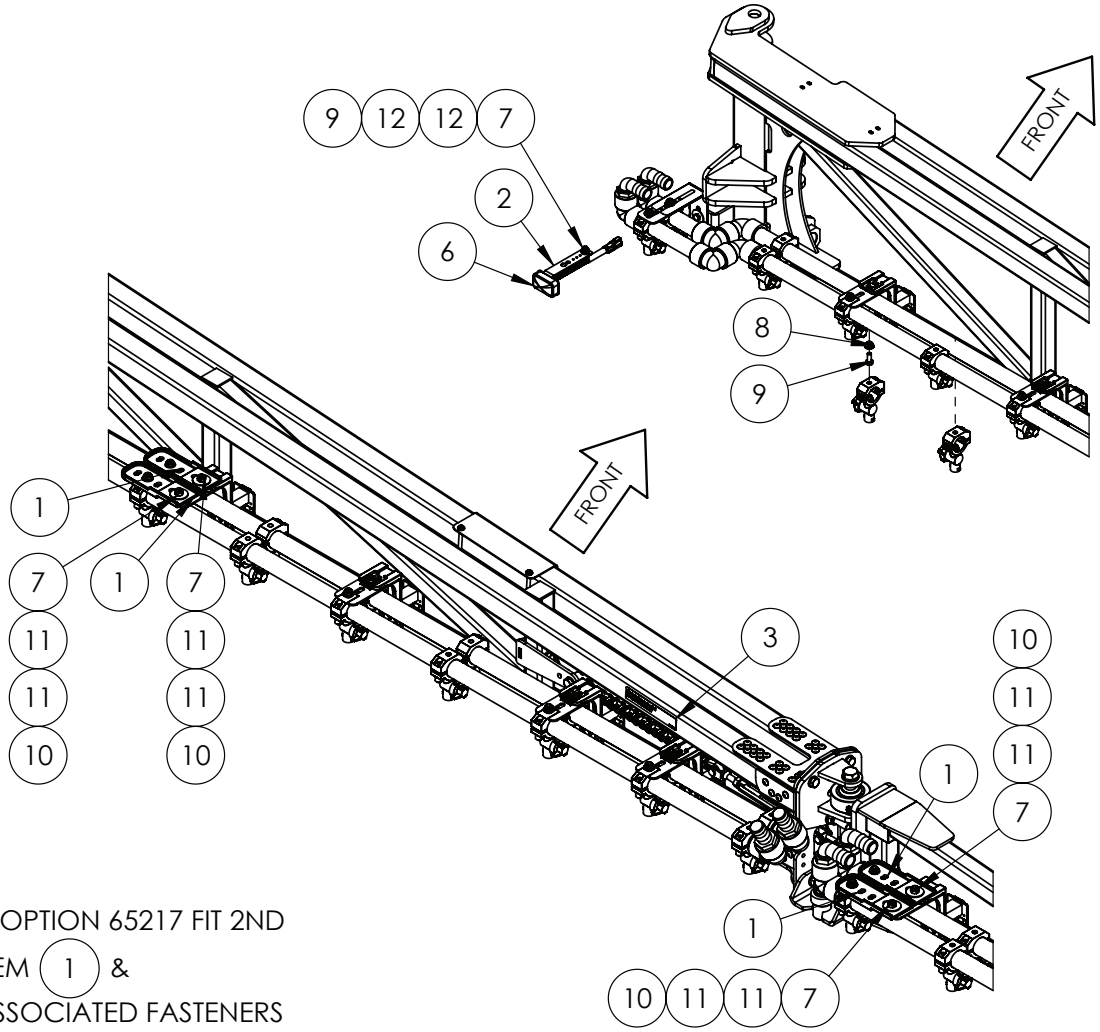

IF OPTION 65217 FIT 2ND
ITEM (1) &
ASSOCIATED FASTENERS

IF DESCRIPTION PREFIX IS ASSEMBLY DRAWING ONLY OR PRODUCTION DRAWING ONLY THE ITEM IS NOT FOR SALE			
ITEM	PART NUMBER	DESCRIPTION	QTY.
1	GA5018255	BRACKET, NOZZLE EXTENSION, PLASTIC	4
2	GA4000597	CLEARANCE LIGHT MOUNTING BRACKET SUIT BOOM	1
3	GA8701199	DECAL, BREAKAWAY LUBRICATION, LH	1
4	GA5024720	END CAP, PLASTIC, BLACK, INSERT, RHS. 50 X 50, 2.4 - 4.0mm WALL	1
5	GA5002963	INSERT 38X38MM CAP	1
6	GA3000267	LIGHT, LED, ORANGE, CLEARANCE, DEUTSCH CONNECTOR	1
7	GA5052590	NUT M8 NYLOC SS	5
8	GA5070710	NUT WITH FLANGE, PLASTIC, M8 X 1.25	26
9	GA5052595	SET SCREW M8 X 20 SS A2-70	27
10	GA5004713	SET SCREW M8 X 25 SS A2-70	4
11	GA5003645	WASHER 5/16" X 1 1/4" FLAT SS	8
12	GA5003643	WASHER M8 FLAT SS HD	2
GA6101993-03 GOLDACRES		ASSEMBLY DRAWING ONLY, BOOM WING, 48M RH	REV 00

Nozzle Brackets, Outer Wing & Breakaway, LH, 48mt

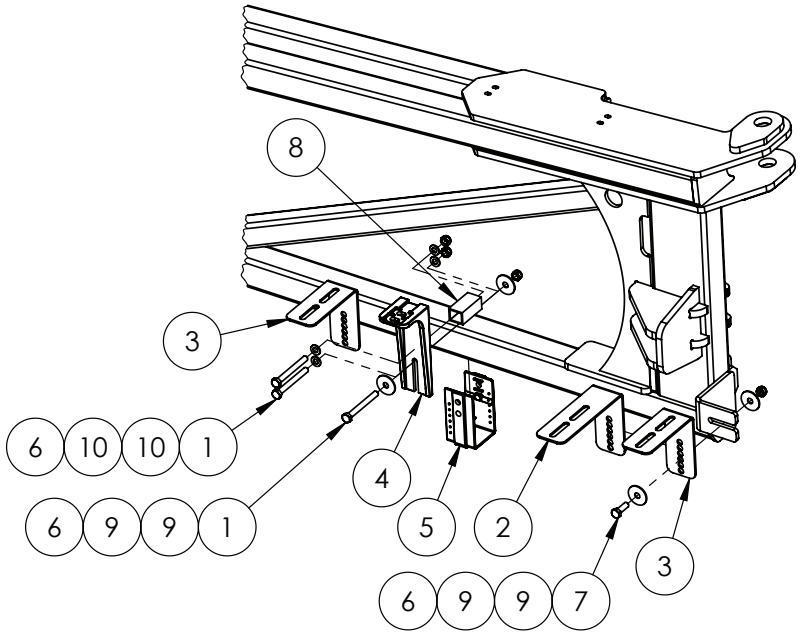

IF OPTION 65215 OR 65216 FIT
ITEMS (3) & ASSOCIATED FASTENERS

IF OPTION 65217 FIT ITEMS (2)
& ASSOCIATED FASTENERS

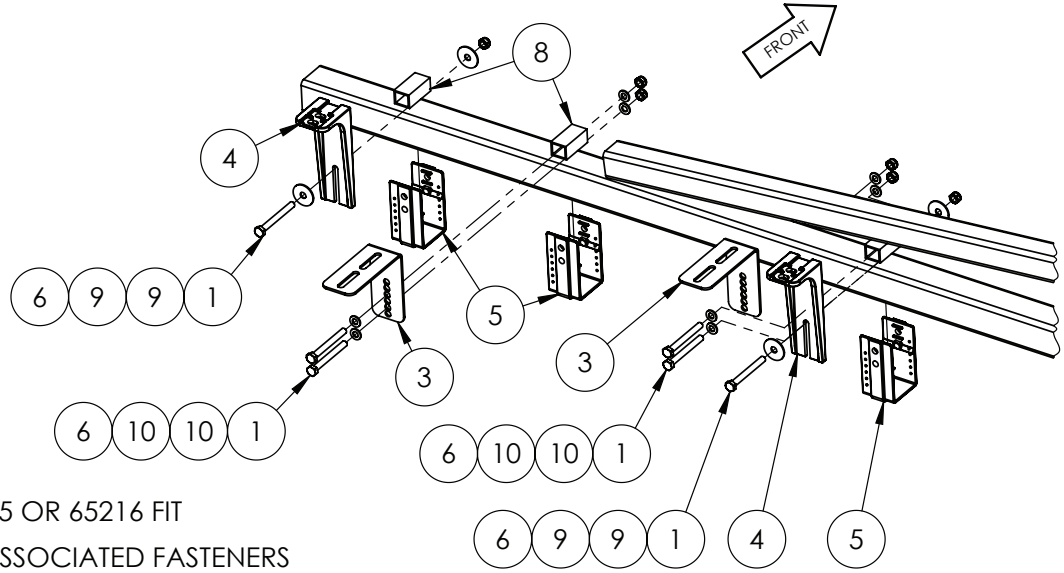

IF OPTION 65215 OR 65216 FIT
ITEMS (4) & ASSOCIATED FASTENERS

IF OPTION 65217 FIT ITEMS (3)
& ASSOCIATED FASTENERS

IF DESCRIPTION PREFIX IS ASSEMBLY DRAWING ONLY OR PRODUCTION DRAWING ONLY THE ITEM IS NOT FOR SALE			
ITEM	PART NUMBER	DESCRIPTION	QTY.
1	GA5052600	BOLT M8 X 75 SS A2-70	36
2	GA4000768	NOZZLE BRACKET L DUAL LINE SS	1
3	GA4505515	NOZZLE BRACKET L LONG SS	13
4	GA5018258	NOZZLE BRACKET, PLASTIC, L SHAPE, LONG	12
5	GA5018259	NOZZLE BRACKET, PLASTIC, U SHAPE	13
6	GA5052590	NUT M8 NYLOC SS	37
7	GA5004713	SET SCREW M8 X 25 SS A2-70	1
8	GA5066965	SPACER SUIT NOZZLE BRACKETS	13
9	GA5003645	WASHER 5/16" X 1 1/4" FLAT SS	26
10	GA5003643	WASHER M8 FLAT SS HD	48
GA6101922-03 GOLDACRES		ASSEMBLY DRAWING ONLY, BOOM WING, 48M LH	REV 00

Nozzle Brackets, Outer Wing & Breakaway, RH, 48mt

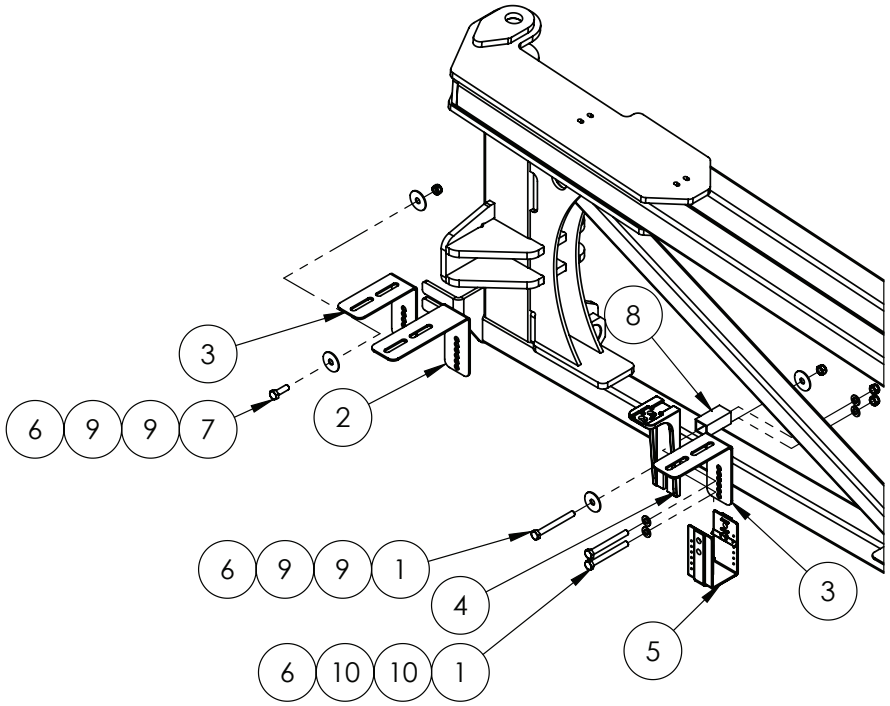

IF OPTION 65215 OR 65216 FIT
ITEM (3) & ASSOCIATED FASTENERS

IF OPTION 65217 FIT ITEM (2)
& ASSOCIATED FASTENERS

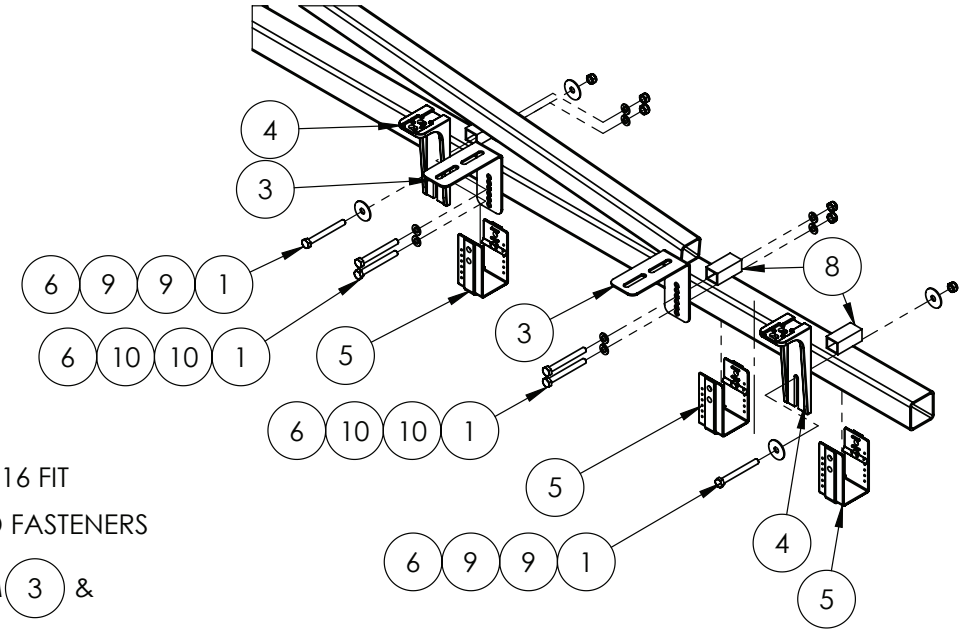

IF OPTION 65215 OR 65216 FIT
ITEM (4) & ASSOCIATED FASTENERS

IF OPTION 65217 FIT ITEM (3) &
ASSOCIATED FASTENERS

IF DESCRIPTION PREFIX IS ASSEMBLY DRAWING ONLY OR PRODUCTION DRAWING ONLY THE ITEM IS NOT FOR SALE			
ITEM	PART NUMBER	DESCRIPTION	QTY.
1	GA5052600	BOLT M8 X 75 SS A2-70	36
2	GA4000768	NOZZLE BRACKET L DUAL LINE SS	1
3	GA4505515	NOZZLE BRACKET L LONG SS	13
4	GA5018258	NOZZLE BRACKET, PLASTIC, L SHAPE, LONG	12
5	GA5018259	NOZZLE BRACKET, PLASTIC, U SHAPE	13
6	GA5052590	NUT M8 NYLOC SS	37
7	GA5004713	SET SCREW M8 X 25 SS A2-70	1
8	GA5066965	SPACER SUIT NOZZLE BRACKETS	13
9	GA5003645	WASHER 5/16" X 1 1/4" FLAT SS	26
10	GA5003643	WASHER M8 FLAT SS HD	48
GA6101993-03 GOLDACRES		ASSEMBLY DRAWING ONLY, BOOM WING, 48M RH	REV 00

Chain Assembly, Breakaway, LH, 48mt

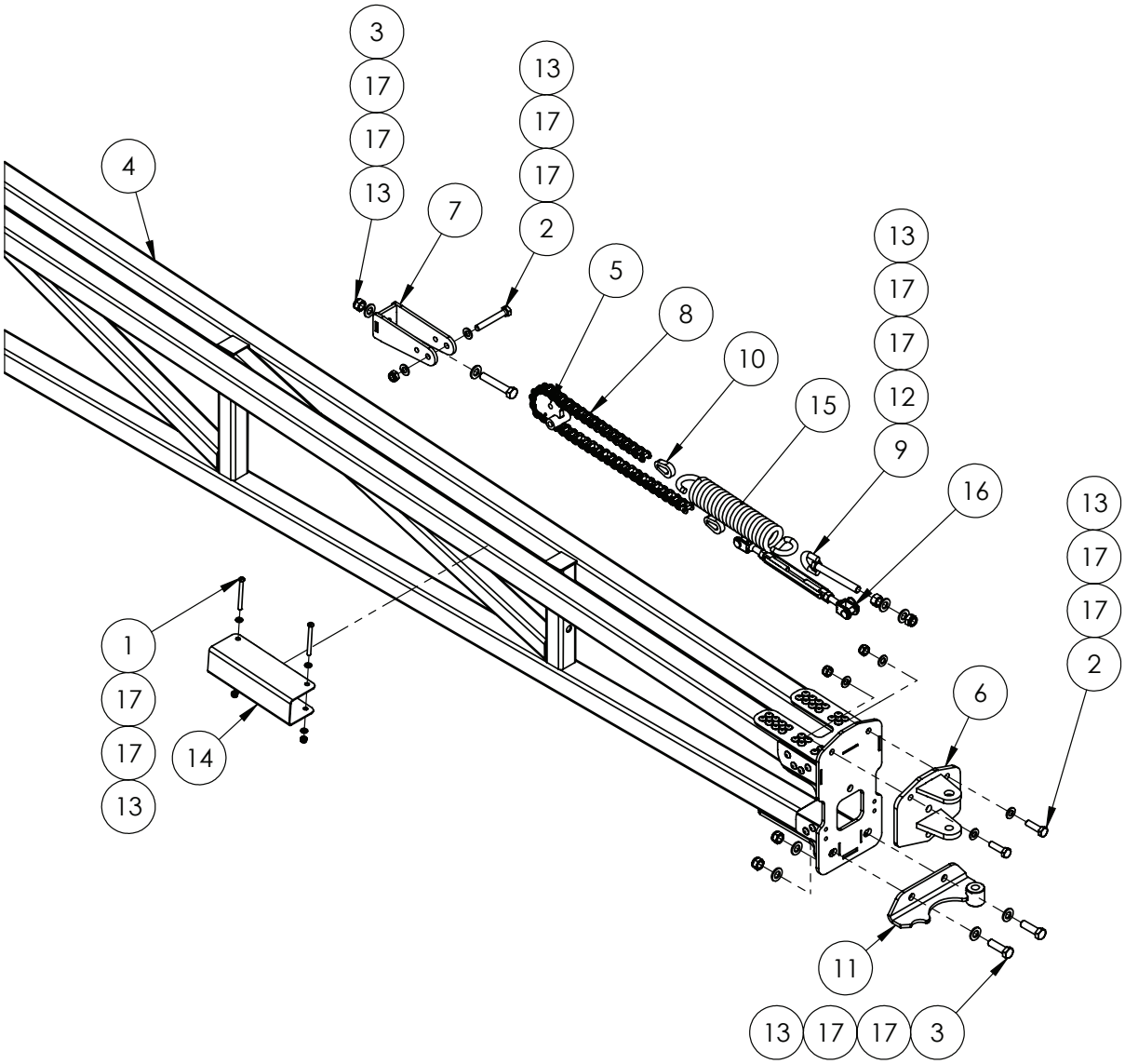

IF DESCRIPTION PREFIX IS ASSEMBLY DRAWING ONLY OR PRODUCTION DRAWING ONLY THE ITEM IS NOT FOR SALE			
ITEM	PART NUMBER	DESCRIPTION	QTY
1	GA0500067	BHCS M6 X 65 GR12.9 ZP	2
2	GA5011163	BOLT M10 X 70 GR8.8 ZP	3
3	GA5000347	BOLT M12 X 70 GR8.8 ZP	3
4	GA4603625	BOOM WING, OUTER, 48M, LH, ALUMINIUM, ANGLE FOLD	1
5	GA4659800	BREAK AWAY CENTRE PIVOT FAB ASSEM	1
6	GA4656131	BREAKAWAY MK3.1 ROSE END CLEVIS	1
7	GA4659805	BREAKAWAY MOUNT	1
8	GA5068985	CHAIN, 5/8", 41 PITCH BREAKAWAY HINGE	1
9	GA5075150	EYE BOLT 12mm X 100mm SHORT	1
10	GA4505695	LINK PLATE CHAIN END	2
11	GA4659336	LOWER PIVOT BRACKET MK3.3	1
12	GA5000559	NUT M12 HEX ZP	1
13	GA5048115	NUT M6 NYLOC ZP	9
14	F70294A	PROTECTOR, BOOM CORD, SUIT 50 X 50, 200mm, SS	1
15	GA5025170	SPRING, TENSION, 50 OD X 260 LONG X 9mm, BREAKAWAY, MY20	1
16	GA5070505	TURNBUCKLE, S/S 10.mm JAW/JAW	1
17	GA5004437	WASHER M6 FLAT SS HD	18
GA6101992-01 GOLDACRES		ASSEMBLY DRAWING ONLY, BOOM WING, 48M LH	REV 00

Chain Assembly, Breakaway, RH, 48mt

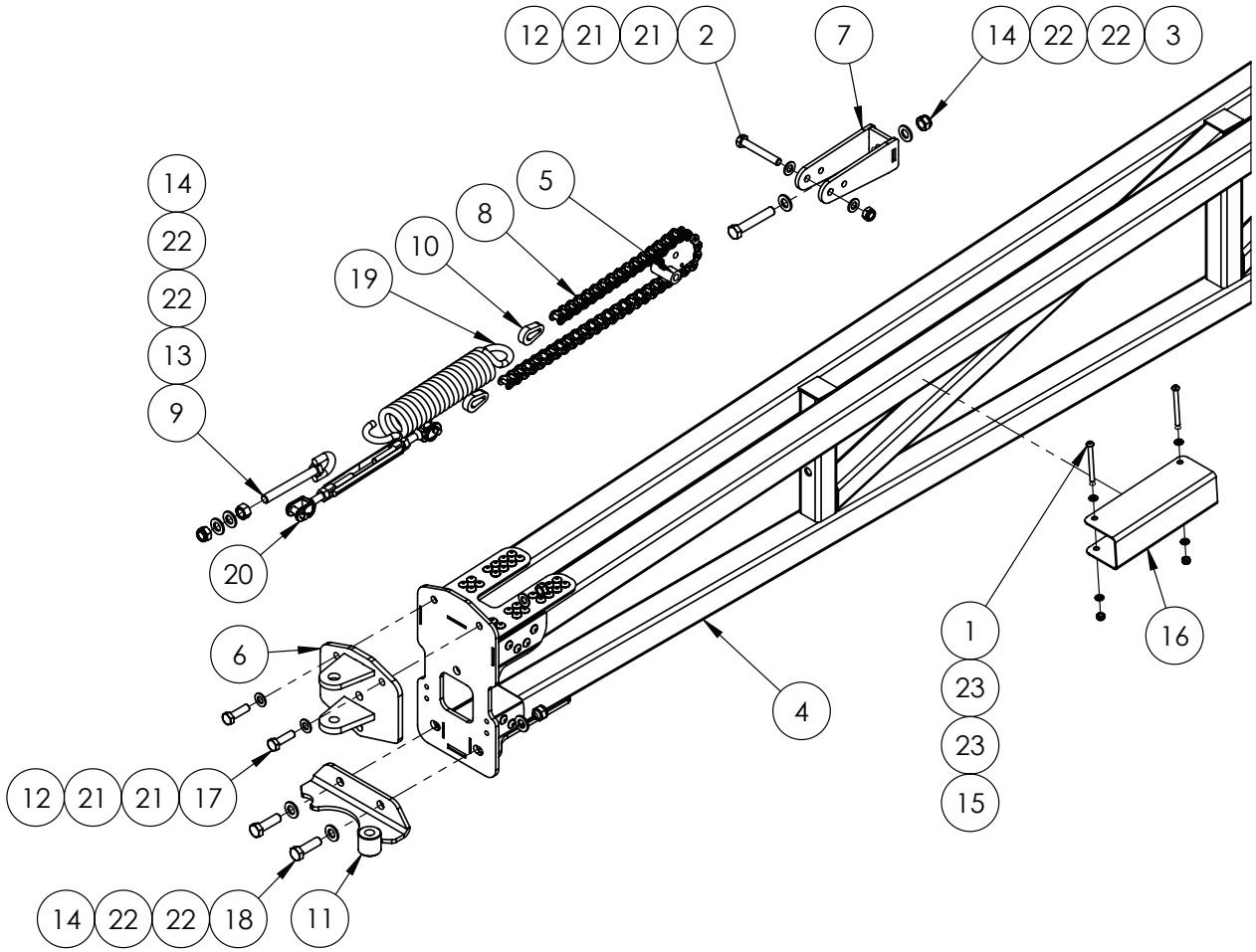

IF DESCRIPTION PREFIX IS ASSEMBLY DRAWING ONLY OR PRODUCTION DRAWING ONLY THE ITEM IS NOT FOR SALE			
ITEM	PART NUMBER	DESCRIPTION	QTY
1	GA0500067	BHCS M6 X 65 GR12.9 ZP	2
2	GA5011163	BOLT M10 X 70 GR8.8 ZP	1
3	GA5000347	BOLT M12 X 70 GR8.8 ZP	1
4	GA4603630	BOOM WING, OUTER, 48M, RH, ALUMINIUM, ANGLE FOLD	1
5	GA4659800	BREAK AWAY CENTRE PIVOT FAB ASSEM	1
6	GA4656131	BREAKAWAY MK3.1 ROSE END CLEVIS	1
7	GA4659805	BREAKAWAY MOUNT	1
8	GA5068985	CHAIN, 5/8", 41 PITCH BREAKAWAY HINGE	1
9	GA5075150	EYE BOLT 12mm X 100mm SHORT	1
10	GA4505695	LINK PLATE CHAIN END	2
11	GA4659336	LOWER PIVOT BRACKET MK3.3	1
12	GA5051445	NUT M10 NYLOC SS	3
13	GA5000559	NUT M12 HEX ZP	1
14	GA5012461	NUT M12 NYLOC ZP	4
15	GA5048115	NUT M6 NYLOC ZP	2
16	F70294A	PROTECTOR, BOOM CORD, SUIT 50 X 50, 200mm, SS	1
17	GA5006111	SET SCREW M10 X 35 GR8.8 ZP	2
18	GA5000319	SET SCREW M12 X 40 GR8.8 ZP	2
19	GA5025170	SPRING, TENSION, 50 OD X 260 LONG X 9mm, BREAKAWAY, MY20	1
20	GA5070505	TURNBUCKLE, S/S 10.mm JAW/JAW	1
21	GA5000117	WASHER M10 FLAT SS HD	6
22	GA5000577	WASHER M12 FLAT SS HD	8
23	GA5004437	WASHER M6 FLAT SS HD	4
GA6101993-01 GOLDACRES		ASSEMBLY DRAWING ONLY, BOOM WING, 48M RH	REV 00

Pivot Assembly, Breakaway, LH, 48mt

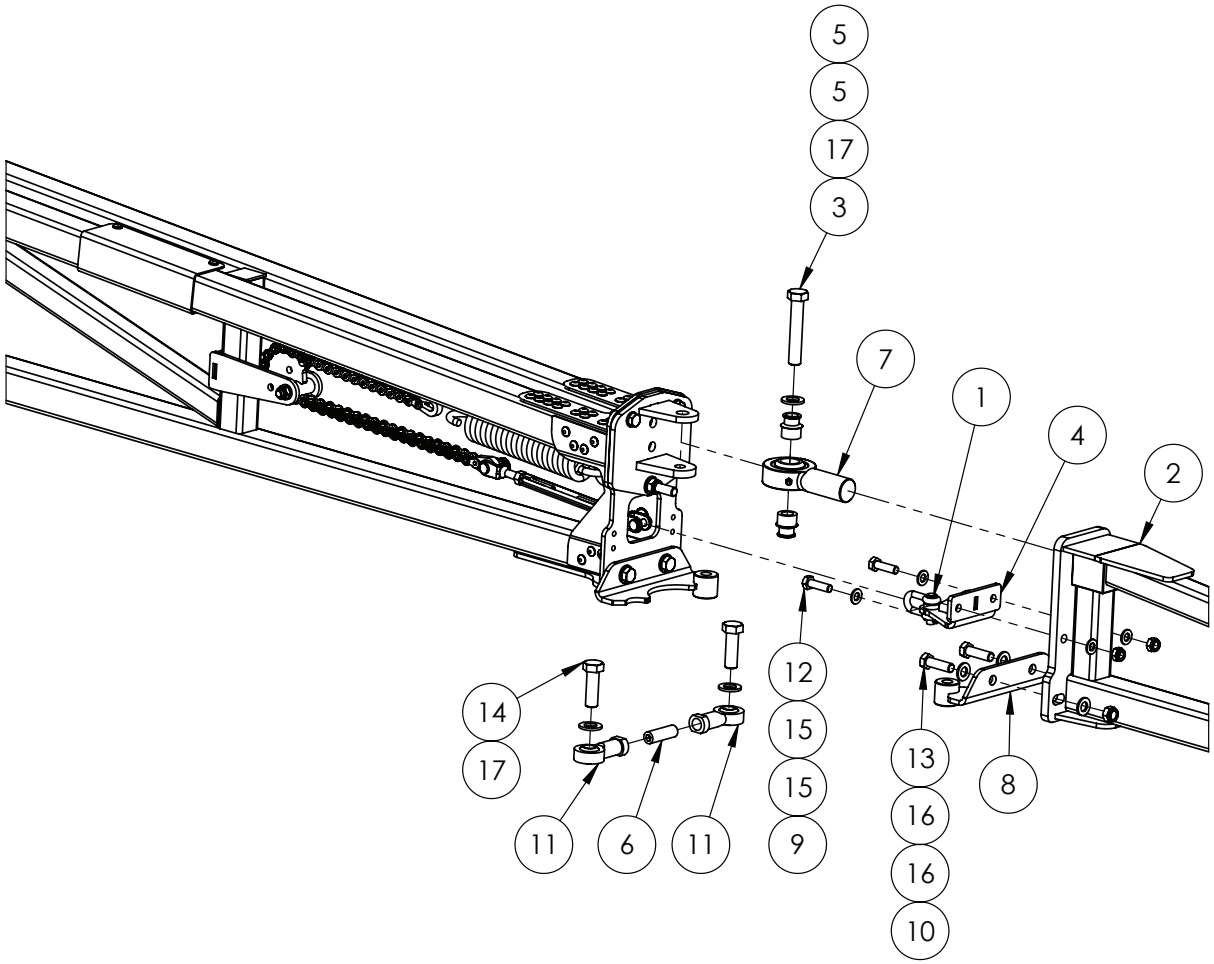

IF DESCRIPTION PREFIX IS ASSEMBLY DRAWING ONLY OR PRODUCTION DRAWING ONLY THE ITEM IS NOT FOR SALE			
ITEM	PART NUMBER	DESCRIPTION	QTY
1	GA5071060	10mm UTILITY CLEVIS 24CST002	1
2	GA4656123	ALUM BREAKAWAY 2M, SUIT 3D BREAKAWAY 2.0	1
3	GA5011297	BOLT M16 X 90 GR8.8 ZP	1
4	GA4659810	BREAKAWAY ROSE END CLEVIS 3D 2.0	1
5	GA4552225	BREAKAWAY ROSE END SPACER BUSH 3D 2.0	2
6	GA5071105	GRUB SCREW M16 X 50	1
7	GA5070530	LARGE ROSE END 1" X 1 1/4" UNF BB074-VM16	1
8	GA4659336	LOWER PIVOT BRACKET MK3.3	1
9	GA5051445	NUT M10 NYLOC SS	2
10	GA5012461	NUT M12 NYLOC ZP	2
11	GA5014469	ROD END FEMALE 16mm	2
12	GA5006111	SET SCREW M10 X 35 GR8.8 ZP	2
13	GA5000319	SET SCREW M12 X 40 GR8.8 ZP	2
14	GA5000933	SET SCREW M16 X 50 GR8.8 ZP	2
15	GA5000117	WASHER M10 FLAT SS HD	4
16	GA5000577	WASHER M12 FLAT SS HD	4
17	GA5001043	WASHER M16 FLAT SS HD	3
GA6101922-02 GOLDACRES		PRODUCTION DRAWING ONLY, BOOM WING, 48M LH, TRITECH V	REV 00

Pivot Assembly, Breakaway, RH, 48mt

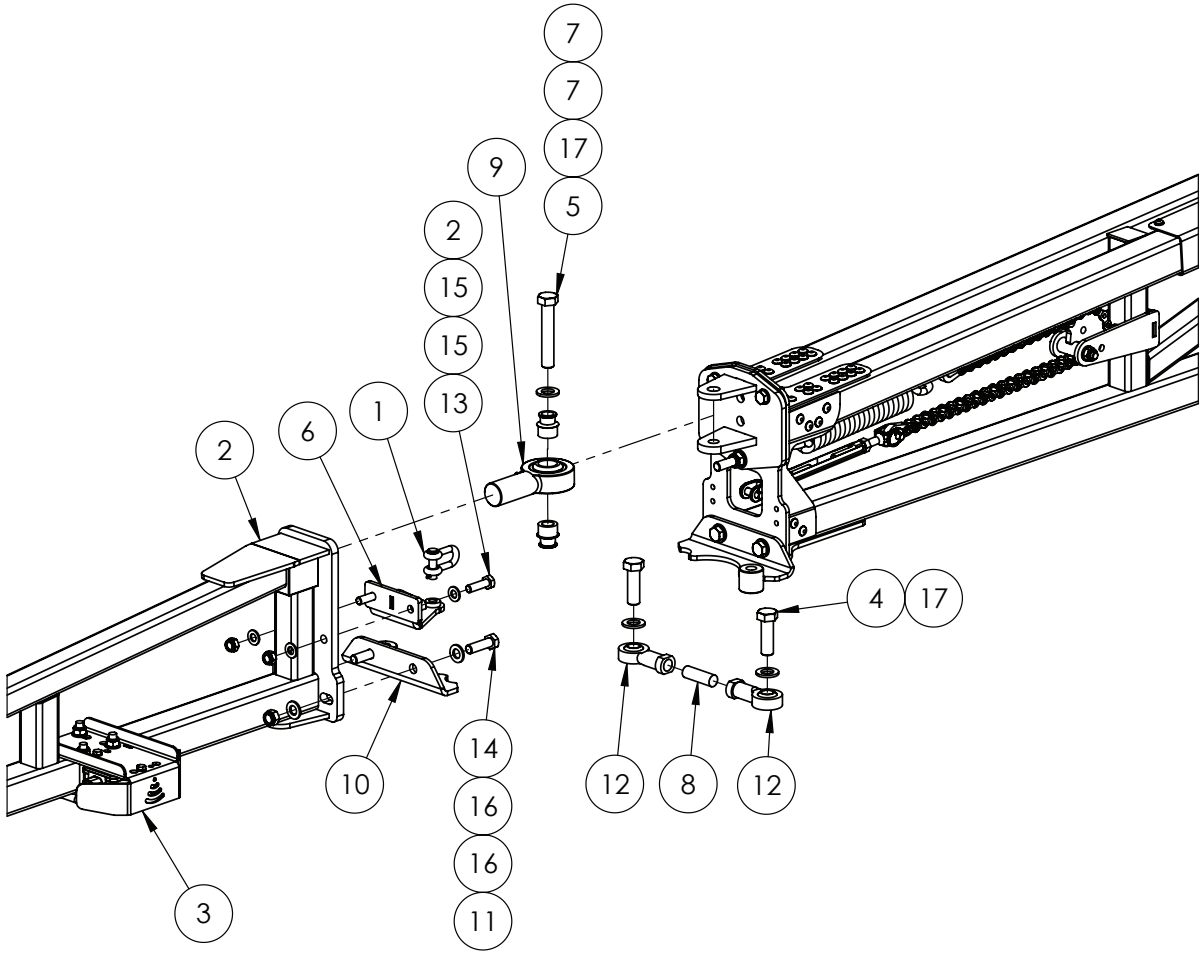

IF DESCRIPTION PREFIX IS ASSEMBLY DRAWING ONLY OR PRODUCTION DRAWING ONLY THE ITEM IS NOT FOR SALE			
ITEM	PART NUMBER	DESCRIPTION	QTY
1	GA5071060	10mm UTILITY CLEVIS 24CST002	1
2	GA4656123	ALUM BREAKAWAY 2M, SUIT 3D BREAKAWAY 2.0	1
3	GA4952700	ASSEMBLY DRAWING ONLY, BRACKET, SENSOR, RAVEN XRT, SUITS TRITECH MY23	1
4	GA5000931	BOLT M16 X 50 GR8.8 ZP	2
5	GA5011297	BOLT M16 X 90 GR8.8 ZP	1
6	GA4659810	BREAKAWAY ROSE END CLEVIS 3D 2.0	1
7	GA4552225	BREAKAWAY ROSE END SPACER BUSH 3D 2.0	2
8	GA5071105	GRUB SCREW M16 X 50	1
9	GA5070530	LARGE ROSE END 1" X 1 1/4" UNF BB074-VM16	1
10	GA4659336	LOWER PIVOT BRACKET MK3.3	1
11	GA5012461	NUT M12 NYLOC ZP	2
12	GA5014469	ROD END FEMALE 16mm	2
13	GA5006111	SET SCREW M10 X 35 GR8.8 ZP	2
14	GA5000319	SET SCREW M12 X 40 GR8.8 ZP	2
15	GA5000117	WASHER M10 FLAT SS HD	4
16	GA5000577	WASHER M12 FLAT SS HD	4
17	GA5001043	WASHER M16 FLAT SS HD	3
GA6101993-02 GOLDACRES		ASSEMBLY DRAWING ONLY. BOOM WING, 48M RH	REV 00

Boom End Protector, LH, 48mt

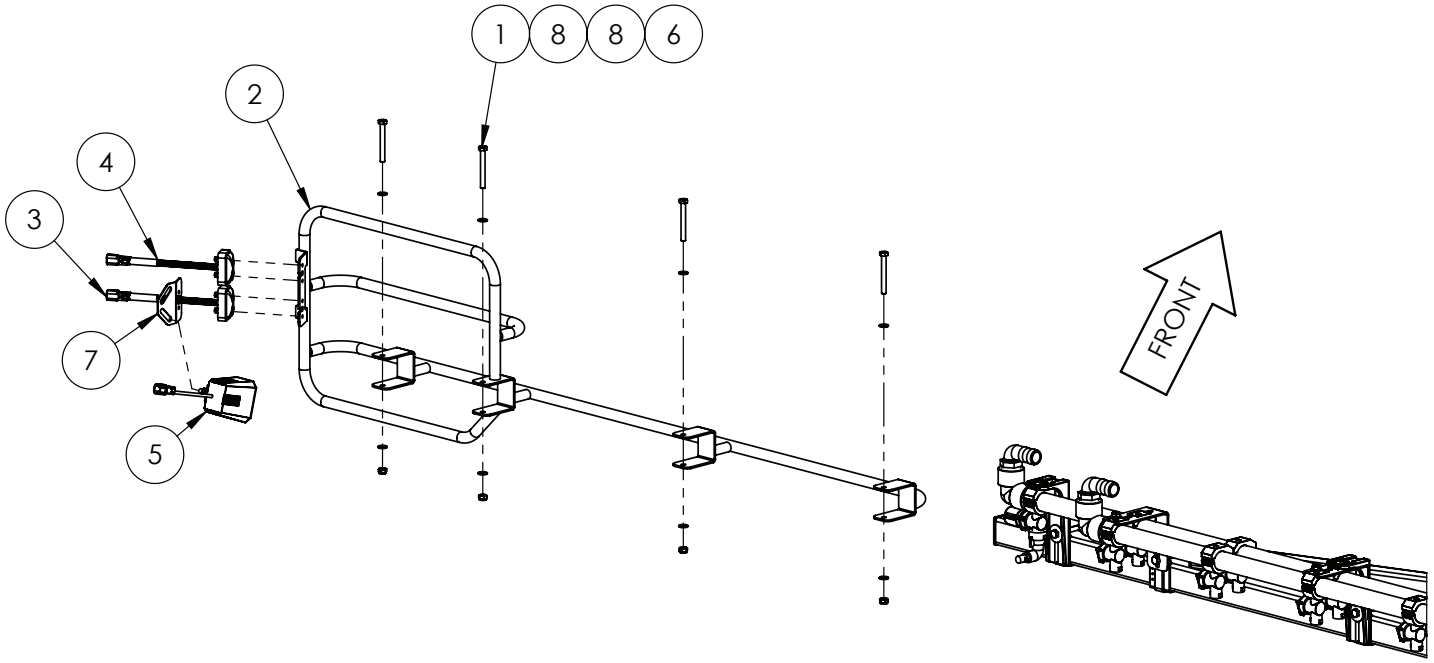

IF DESCRIPTION PREFIX IS ASSEMBLY DRAWING ONLY OR PRODUCTION DRAWING ONLY THE ITEM IS NOT FOR SALE			
ITEM	PART NUMBER	DESCRIPTION	QTY
1	GA5004738	BOLT M8 X 70 GR8.8 ZP	4
2	GA4601260	BOOM END PROTECTOR, LH, SLIM	1
3	GA3001268	LIGHT, LED, GREEN, FENCE, DEUTSCH CONNECTOR	1
4	GA3000267	LIGHT, LED, ORANGE, CLEARANCE, DEUTSCH CONNECTOR	1
5	GA3001119	LIGHT, LED, RED BEAM LINE, TIP INDICATOR WITH DEUTSCH CONNECTOR	1
6	GA5052590	NUT M8 NYLOC SS	4
7	GA4000485	PLATE, BREAKAWAY TIP, 48m BOOM, BEAM LIGHT MOUNT	1
8	GA5003643	WASHER M8 FLAT SS HD	8
GA6101922-13 GOLDACRES		ASSEMBLY DRAWING ONLY, BOOM WING, 48M LH	REV 00

Boom End Protector, RH, 48mt

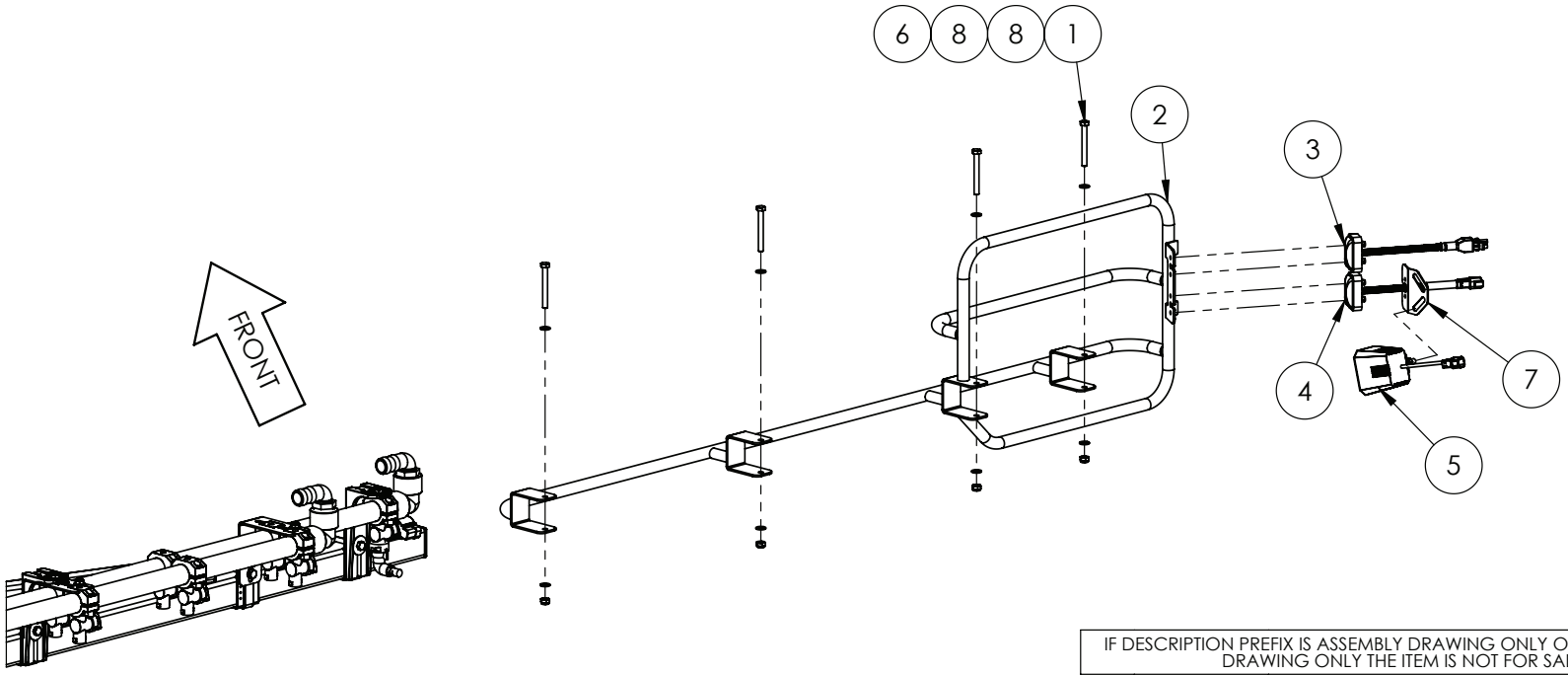

IF DESCRIPTION PREFIX IS ASSEMBLY DRAWING ONLY OR PRODUCTION DRAWING ONLY THE ITEM IS NOT FOR SALE			
ITEM	PART NUMBER	DESCRIPTION	QTY
1	GA5004738	BOLT M8 X 70 GR8.8 ZP	4
2	GA4601265	BOOM END PROTECTOR, RH, SLIM	1
3	GA5060057	CLEARANCE LIGHT WITH CONNECTOR, ORANGE LED, SUIT FENCE LINE JET	1
4	GA3001268	LIGHT, LED, GREEN, FENCE, DEUTSCH CONNECTOR	1
5	GA3001119	LIGHT, LED, RED BEAM LINE, TIP INDICATOR WITH DEUTSCH CONNECTOR	1
6	GA5004917	NUT M8 NYLOC ZP	4
7	GA4000485	PLATE, BREAKAWAY TIP, 48m BOOM, BEAM LIGHT MOUNT	1
8	GA5003643	WASHER M8 FLAT SS HD	8
GA6101993-13 GOLDACRES		ASSEMBLY DRAWING ONLY. BOOM WING, 48M RH	REV 00

14 - Wheels, Axles & Mudguards

Rim & Tyre Options

BUILD OPTIONS:
40014 - VF480/80R50 VRD900 - WHITE RIMS
40015 - VF480/80R50 VRD900 - BLACK RIMS
40016 - VF580/85R42 VRD900 -WHITE RIMS

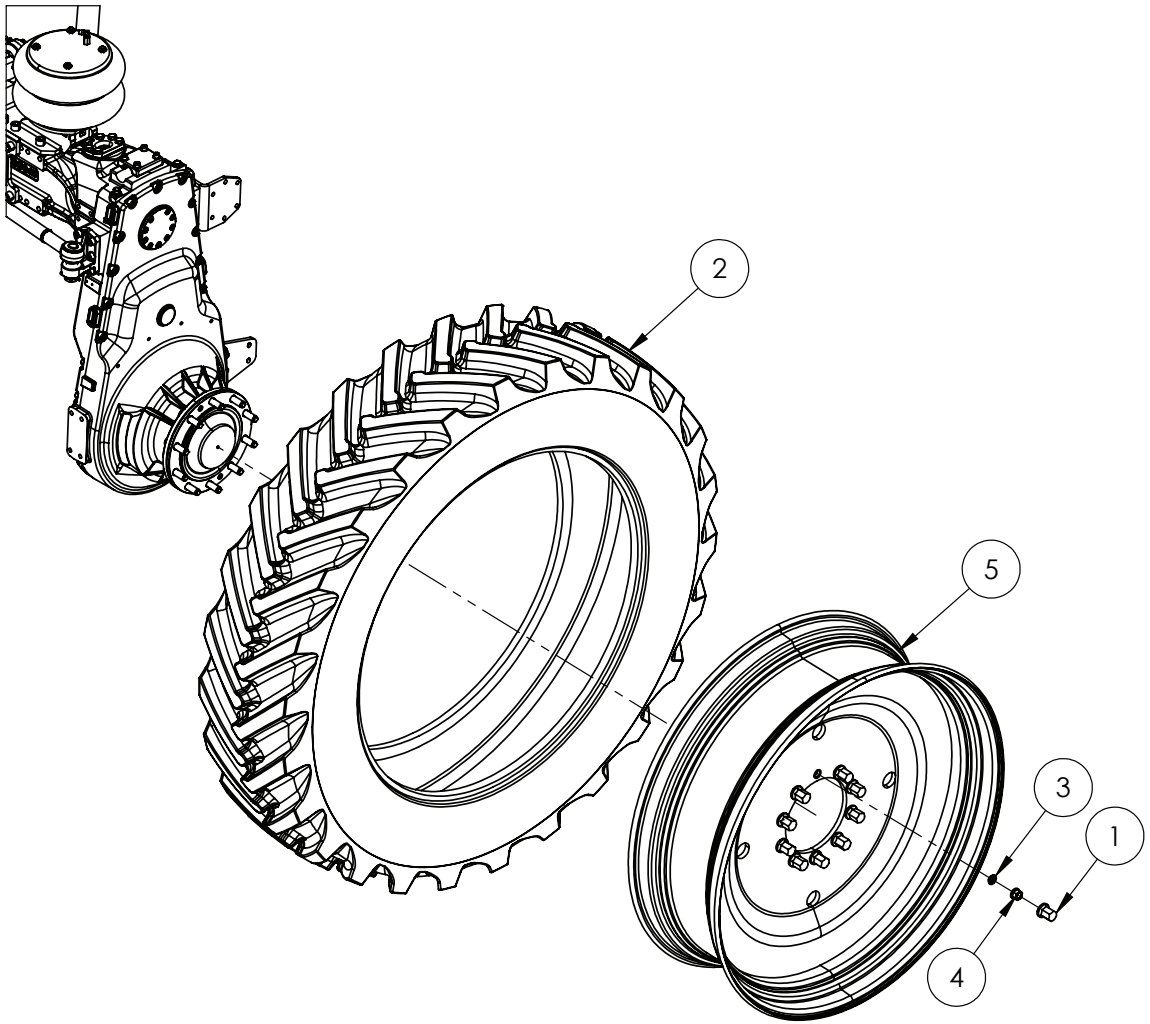

IF DESCRIPTION PREFIX IS ASSEMBLY DRAWING ONLY OR PRODUCTION DRAWING ONLY THE ITEM IS NOT FOR SALE			
ITEM	PART NUMBER	DESCRIPTION	QTY.
1	GA5070815	HEX NUT CAP SUIT M22 CROP CRUISER STUD	-
2	GA1500081	TYRE, 480/80R50, VF, VDR900, ASCENSO	-
	GA1500097	TYRE, 580/85R42, VF, VDR900, ASCENSO	-
3	GA0500247	WASHER, WHEEL, CONICAL SPLIT, M22, DROMOS	-
4	GA0500246	WHEEL NUT, M22 X 1.5, DROMOS	-
5	GA1500050	WHEEL, AG50-15, 10 STUD 335 PCD, 0mm AND -18mm OFFSET, UNIVERSAL, 290mm CENTRE, NG23	-
	GA1500095	WHEEL, AG50-15, 10 STUD 335 PCD, 0mm AND -18mm OFFSET, UNIVERSAL, 290mm CENTRE, BLACK	-
GA7800318 GOLDACRES		ASSEMBLY DRAWING ONLY, WHEEL INSTALLATION, LARGE FRAME SP, S3	REV 00.A

Mudguards, Axle Mount, Front, 4WD, 480-80R50 Tyre

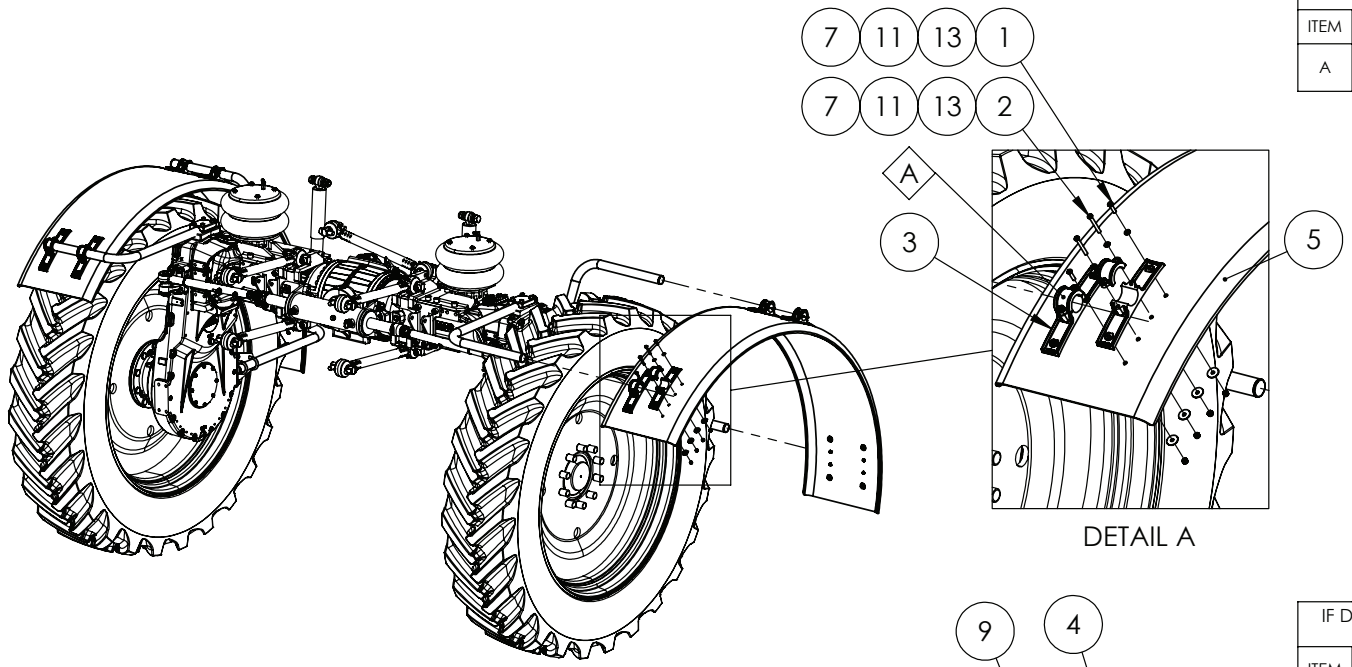

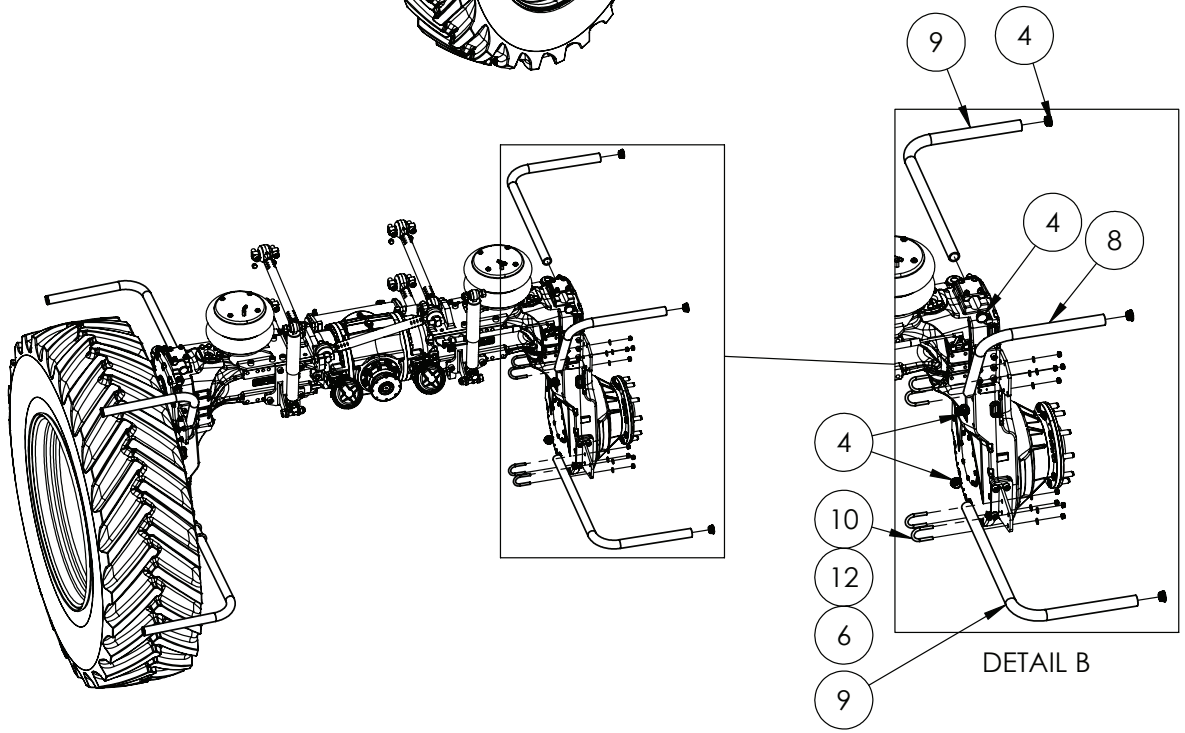

REPLACEMENT PARTS			
ITEM	PART NUMBER	DESCRIPTION	QTY
A	GA5020450-SK	MUDGUARD BRACKET KIT, SINGLE BRACKET & FASTENERS	-

IF DESCRIPTION PREFIX IS ASSEMBLY DRAWING ONLY OR PRODUCTION DRAWING ONLY THE ITEM IS NOT FOR SALE			
ITEM	PART NUMBER	DESCRIPTION	QTY
1	GA5051370	BHCS M8 X 35 SS A2-70	24
2	GA5078889	BHCS M8 X 70 SS A2-70	24
3	GA5078888	BRACKET, MUDGUARD MOUNT ASSEMBLY, SUIT 48.5mm PIPE	12
4	GA5003925	END CAP, 45 mm ROUND, BLACK PLASTIC	12
5	GA5003825	MUDGUARD, BLACK PLASTIC, 500 WIDE X 1000 RADIUS	2
6	GA5012461	NUT M12 NYLOC ZP	16
7	GA5004917	NUT M8 NYLOC ZP	48
8	GA5078568	PIPE, MUDGUARD MOUNT, FRONT 4WD DROPLEG, MIDDLE, G6 MY20	2
9	GA5078567	PIPE, MUDGUARD MOUNT, FRONT 4WD DROPLEG, TOP AND REAR, G6 MY20	4
10	GA5071209	U BOLT, ROUND TOP, M12X97X62MM, ZP	8
11	GA5003645	WASHER 5/16" X 1 1/4" FLAT SS	48
12	GA5000577	WASHER M12 FLAT SS HD	16
13	GA5003651	WASHER M8 FLAT SS	48
GA7800524 GOLDACRES		ASSEMBLY DRAWING ONLY, FRONT MUDGUARDS TO SUIT 480-80R50, G8 S3	REV 00

Mudguards, Axle Mount, Front, 4WD, 580-85R42

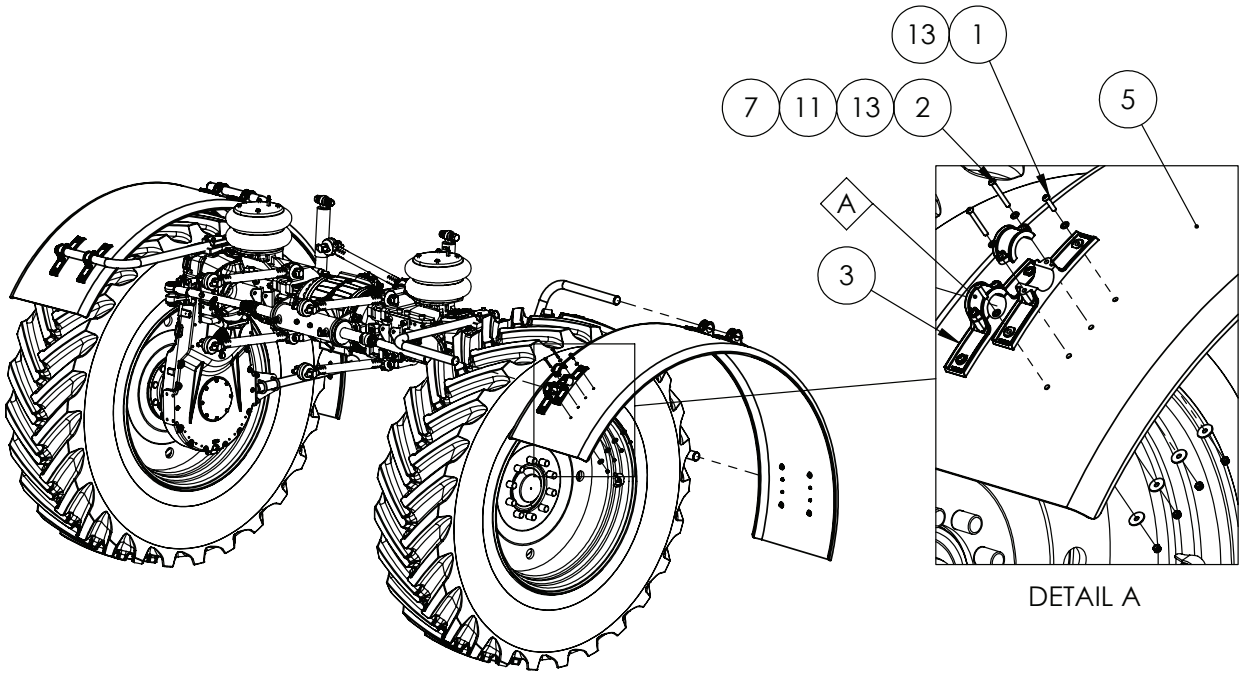

DETAIL A

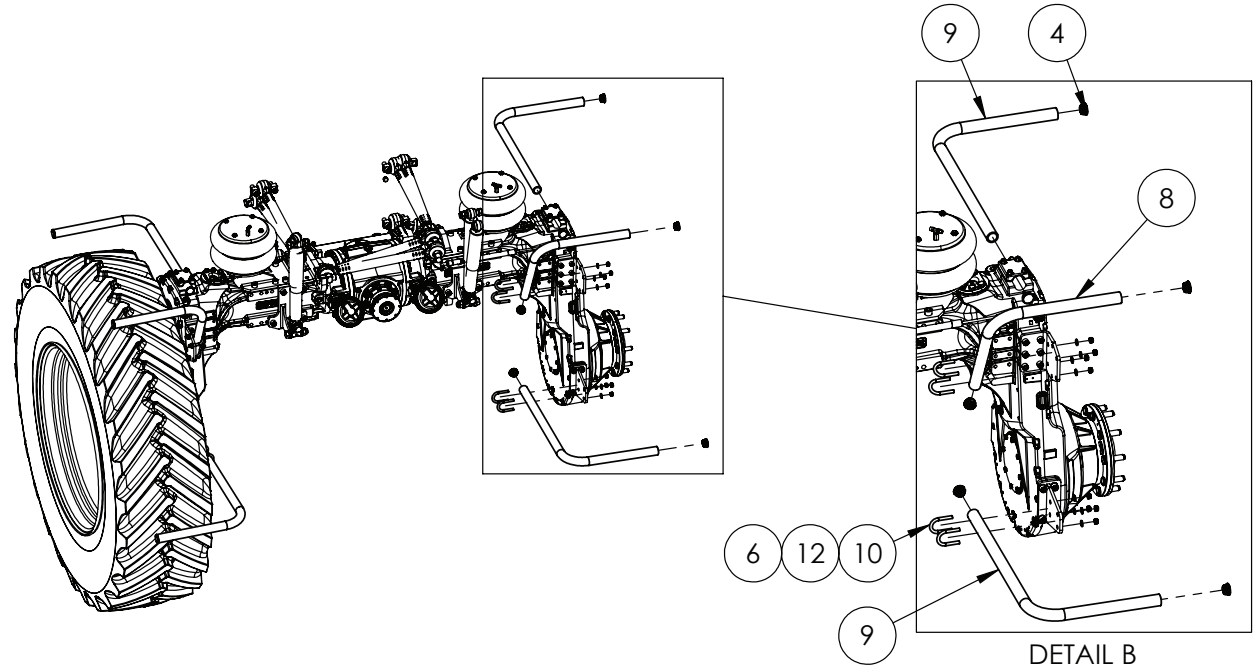

DETAIL B

REPLACEMENT PARTS			
ITEM	PART NUMBER	DESCRIPTION	QTY
A	GA5020450-SK	MUDGUARD BRACKET KIT, SINGLE BRACKET & FASTENERS	-

IF DESCRIPTION PREFIX IS ASSEMBLY DRAWING ONLY OR PRODUCTION DRAWING ONLY THE ITEM IS NOT FOR SALE			
ITEM	PART NUMBER	DESCRIPTION	QTY
1	GA5051370	BHCS M8 X 35 SS A2-70	24
2	GA5078889	BHCS M8 X 70 SS A2-70	24
3	GA5078888	BRACKET, MUDGUARD MOUNT ASSEMBLY, SUIT 48.5mm PIPE	12
4	GA5003925	END CAP, 45 mm ROUND, BLACK PLASTIC	12
5	GA5004263	MUDGUARD, BLACK PLASTIC, 630 WIDE X 1000 RADIUS	2
6	GA5012461	NUT M12 NYLOC ZP	16
7	GA5004917	NUT M8 NYLOC ZP	48
8	GA5078568	PIPE, MUDGUARD MOUNT, FRONT 4WD DROPLEG, MIDDLE, G6 MY20	2
9	GA5078567	PIPE, MUDGUARD MOUNT, FRONT 4WD DROPLEG, TOP AND REAR, G6 MY20	4
10	GA5071209	U BOLT, ROUND TOP, M12X97X62MM, ZP	8
11	GA5003645	WASHER 5/16" X 1 1/4" FLAT SS	48
12	GA5000577	WASHER M12 FLAT SS HD	16
13	GA5003651	WASHER M8 FLAT SS	48
GA7800525 GOLDACRES		ASSEMBLY DRAWING ONLY, FRONT MUDGUARDS TO SUIT 580-85R42	REV 00

Mudguards, Axle Mount, Rear, 4WD, 480-80R50 Tyre

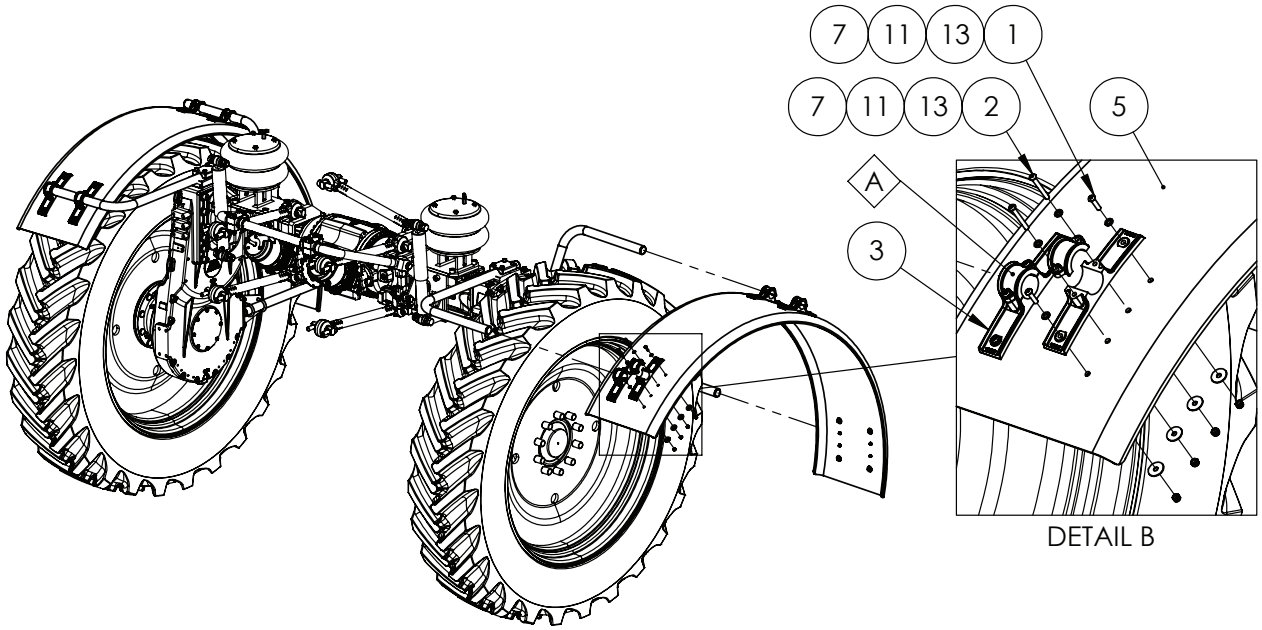

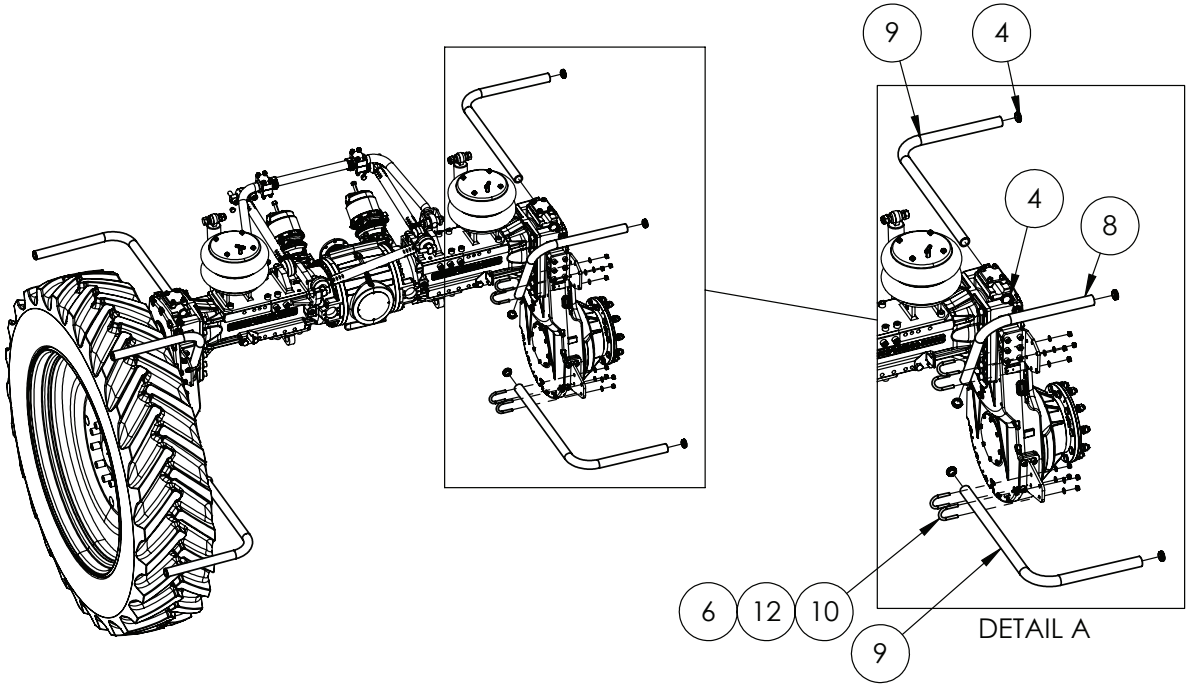

REPLACEMENT PARTS			
ITEM	PART NUMBER	DESCRIPTION	QTY
A	GA5020450-SK	MUDGUARD BRACKET KIT, SINGLE BRACKET & FASTENERS	-

IF DESCRIPTION PREFIX IS ASSEMBLY DRAWING ONLY OR PRODUCTION DRAWING ONLY THE ITEM IS NOT FOR SALE			
ITEM	PART NUMBER	DESCRIPTION	QTY
1	GA5051370	BHCS M8 X 35 SS A2-70	24
2	GA5078889	BHCS M8 X 70 SS A2-70	24
3	GA5078888	BRACKET, MUDGUARD MOUNT ASSEMBLY, SUIT 48.5mm PIPE	12
4	GA5003925	END CAP, 45 mm ROUND, BLACK PLASTIC	12
5	GA5003825	MUDGUARD, BLACK PLASTIC, 500 WIDE X 1000 RADIUS	2
6	GA5012461	NUT M12 NYLOC ZP	16
7	GA5004917	NUT M8 NYLOC ZP	48
8	GA5078568	PIPE, MUDGUARD MOUNT, FRONT 4WD DROPLEG, MIDDLE, G6 MY20	2
9	GA5078567	PIPE, MUDGUARD MOUNT, FRONT 4WD DROPLEG, TOP AND REAR, G6 MY20	4
10	GA5071209	U BOLT, ROUND TOP, M12X97X62MM, ZP	8
11	GA5003645	WASHER 5/16" X 1 1/4" FLAT SS	48
12	GA5000577	WASHER M12 FLAT SS HD	16
13	GA5003651	WASHER M8 FLAT SS	48
GA7800518 GOLDACRES		ASSEMBLY DRAWING ONLY, REAR MUDGUARDS TO SUIT 480-80R50, G8 S3	REV 00

Mudguards, Axle Mount, Rear, 4WD, 580-85R42

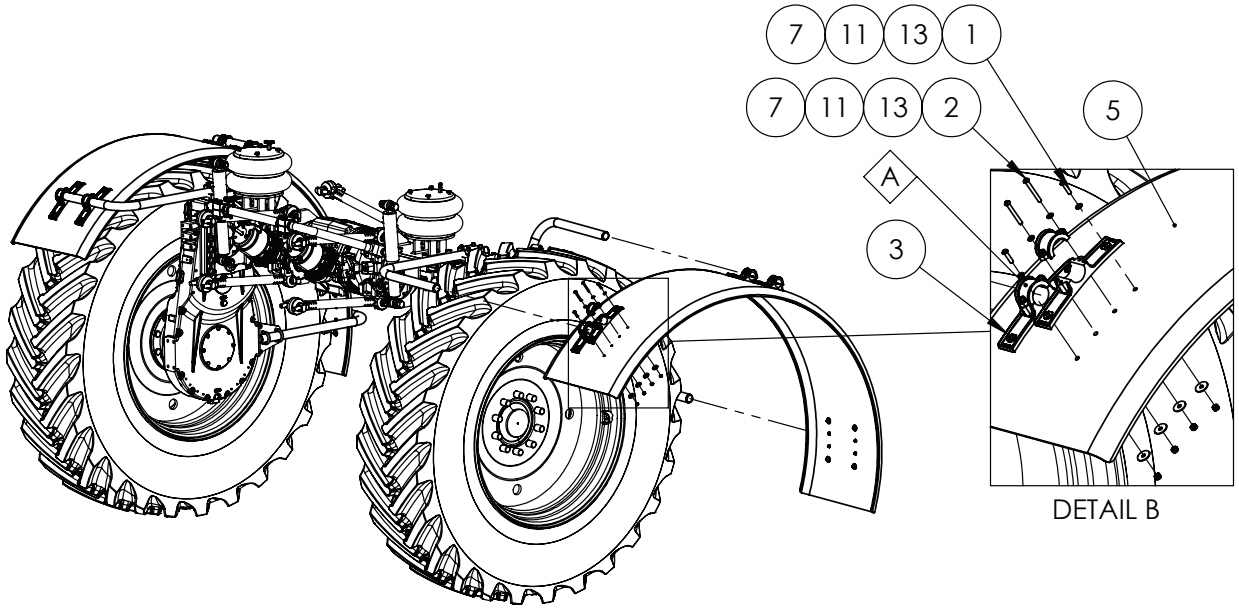

REPLACEMENT PARTS			
ITEM	PART NUMBER	DESCRIPTION	QTY
A	GA5020450-SK	MUDGUARD BRACKET KIT, SINGLE BRACKET & FASTENERS	-

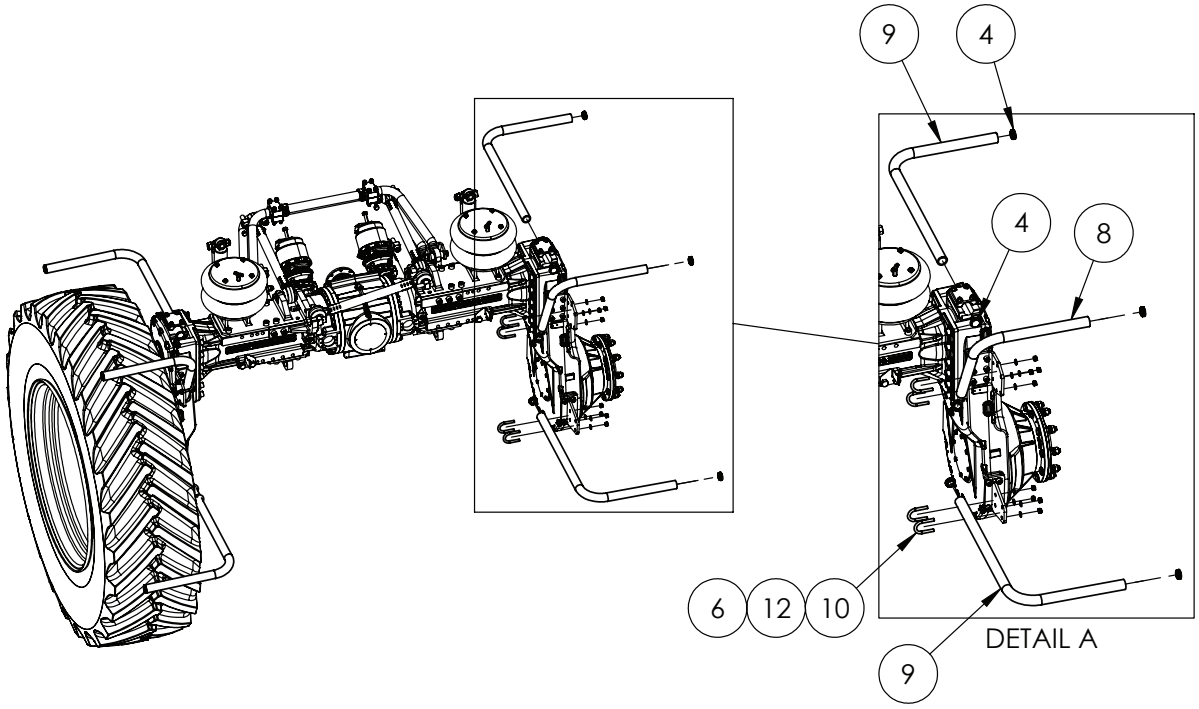

IF DESCRIPTION PREFIX IS ASSEMBLY DRAWING ONLY OR PRODUCTION DRAWING ONLY THE ITEM IS NOT FOR SALE			
ITEM	PART NUMBER	DESCRIPTION	QTY
1	GA5051370	BHCS M8 X 35 SS A2-70	24
2	GA5078889	BHCS M8 X 70 SS A2-70	24
3	GA5078888	BRACKET, MUDGUARD MOUNT ASSEMBLY, SUIT 48.5mm PIPE	12
4	GA5003925	END CAP, 45 mm ROUND, BLACK PLASTIC	12
5	GA5004263	MUDGUARD, BLACK PLASTIC, 630 WIDE X 1000 RADIUS	2
6	GA5012461	NUT M12 NYLOC ZP	16
7	GA5004917	NUT M8 NYLOC ZP	48
8	GA5078568	PIPE, MUDGUARD MOUNT, FRONT 4WD DROPLEG, MIDDLE, G6 MY20	2
9	GA5078567	PIPE, MUDGUARD MOUNT, FRONT 4WD DROPLEG, TOP AND REAR, G6 MY20	4
10	GA5071209	U BOLT, ROUND TOP, M12X97X62MM, ZP	8
11	GA5003645	WASHER 5/16" X 1 1/4" FLAT SS	48
12	GA5000577	WASHER M12 FLAT SS HD	16
13	GA5003651	WASHER M8 FLAT SS	48
GA7800523 GOLDACRES		ASSEMBLY DRAWING ONLY, REAR MUDGUARDS TO SUIT 580-85R42, G8 S3	REV 00

Crop Dividers - Front Axle, 4WD

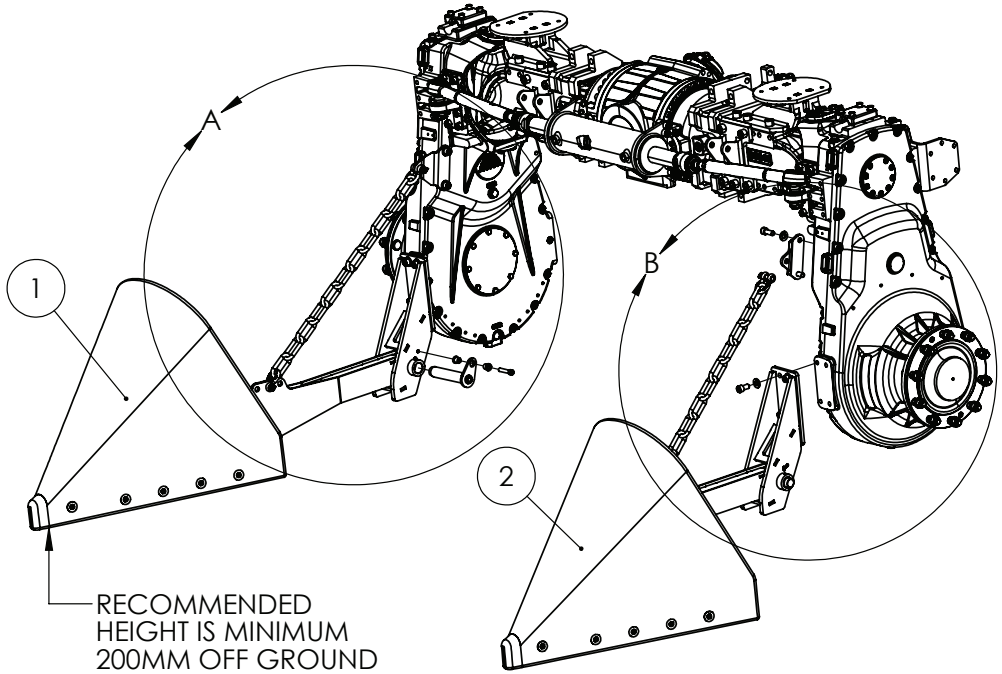

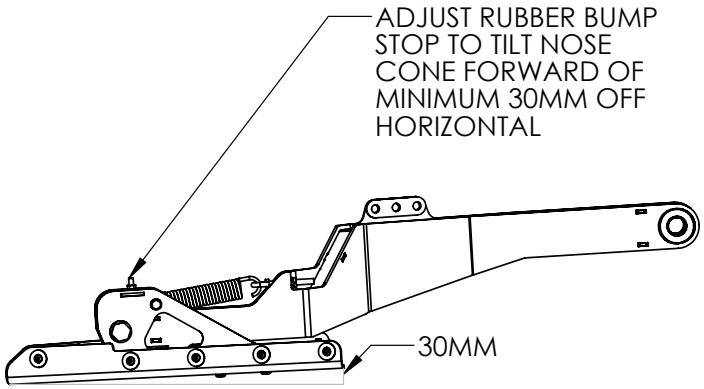

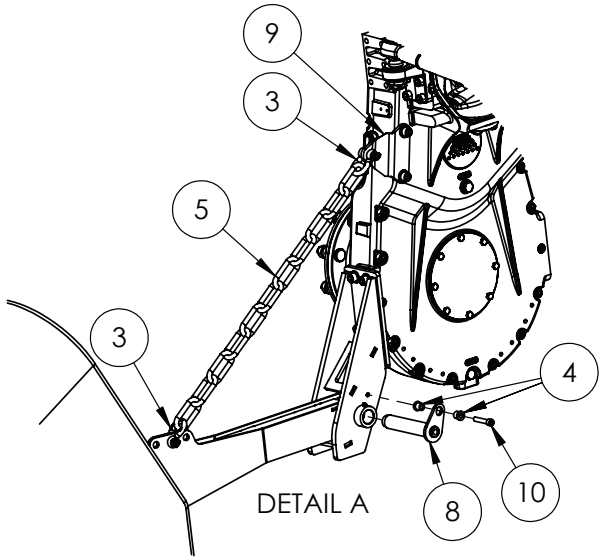

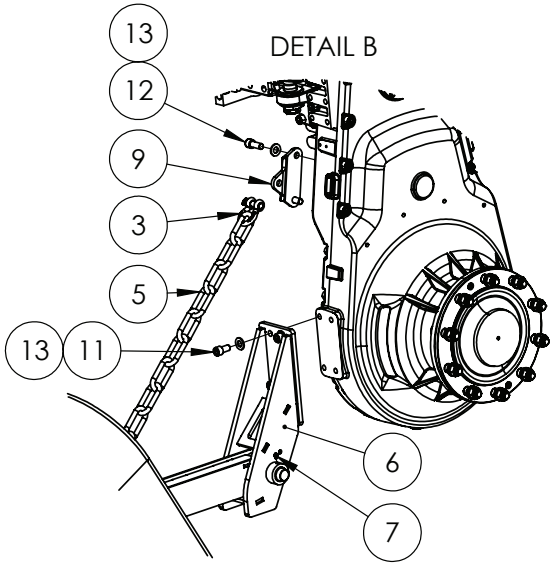

IF DESCRIPTION PREFIX IS ASSEMBLY DRAWING ONLY OR PRODUCTION DRAWING ONLY THE ITEM IS NOT FOR SALE			
ITEM	PART NUMBER	DESCRIPTION	QTY
1	GA4949705	ASSEMBLY, CROP DIVIDER, RIGHT, MY11 ONWARD	1
2	GA4949700	ASSEMBLY, NOSE CONE, CROP DIVIDER, LEFT, MY11 ONWARD	1
3	GA5075230	BOW SHACKLE 13mm WLL 3.25T BLACK	4
4	MACH0152	BUSH WITH SHOULDER, 12.3 ID X 25 OD X 21 LONG, SUIT PARALIFT PIN BOLTS	4
5	GA4909235	CHAIN, LONG LINK, 13mm, GR 80, PAINT BLACK, CUT TO LENGTH GA5065030	2
6	GA4605146	CROP DIVIDER MOUNTING BRACKET, 4WD G8 S3	2
7	GA5050450	GREASE NIPPLE, 6mm	4
8	GA4603500	PIN, CROP DIVIDER, ARM PIVOT WITH LOCKING PLATE, 1.5" OD, MY21	2
9	GA4000779	PLATE, CHAIN MOUNT, CROP DIVIDER, CROP CRUISER, S3	2
10	GA0500020	SHCS M12 X 60 GR12.9 ZP	2
11	GA5000915	SHCS M16 X 30 GR12.9 ZP	8
12	GA5000925	SHCS M16 X 40 GR12.9 ZP	4
13	GA5001043	WASHER 16mm FLAT SS HD	12
GA1100088 GOLDACRES		SALES KIT, CROP DIVIDER, FRONT & REAR, 4WD, LARGE FRAME S3	REV 00

Crop Dividers - Rear Axle, 4WD

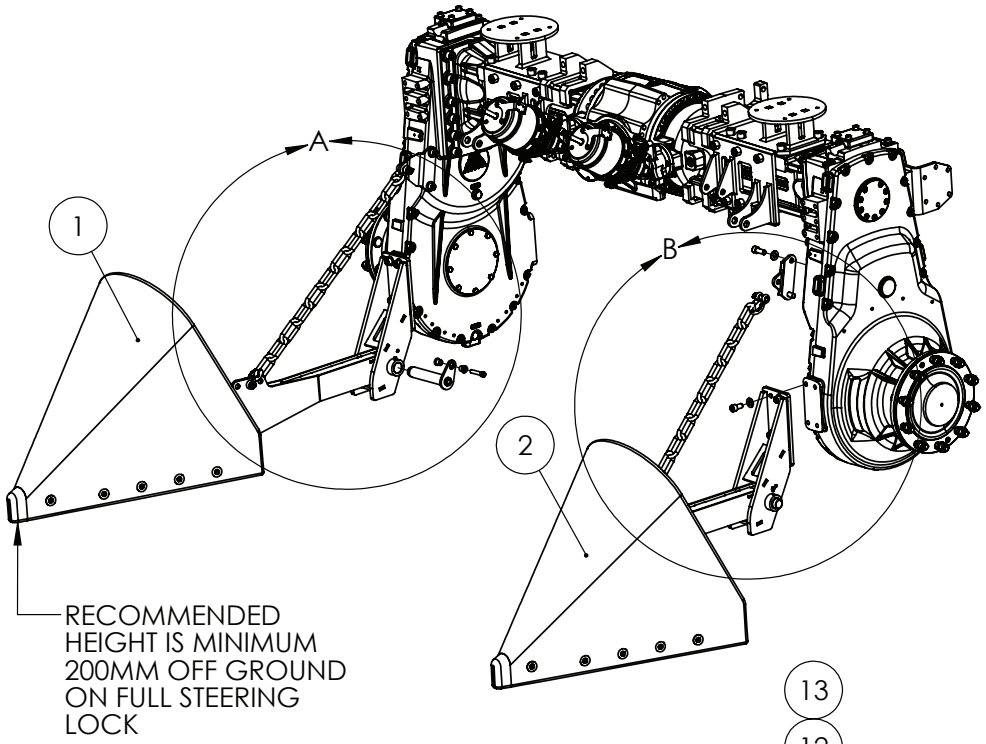

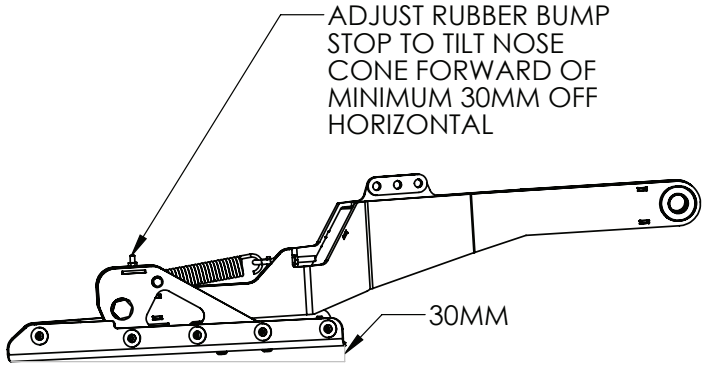

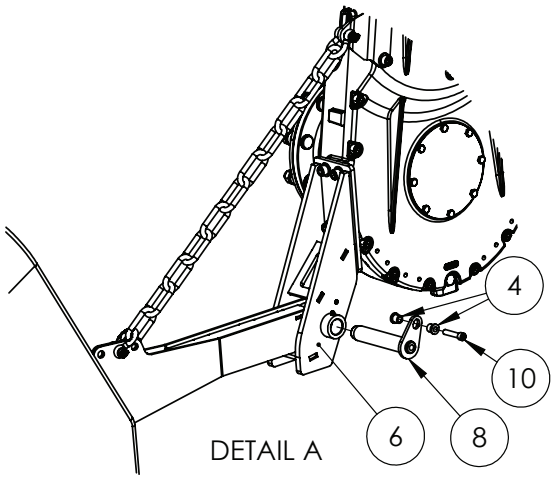

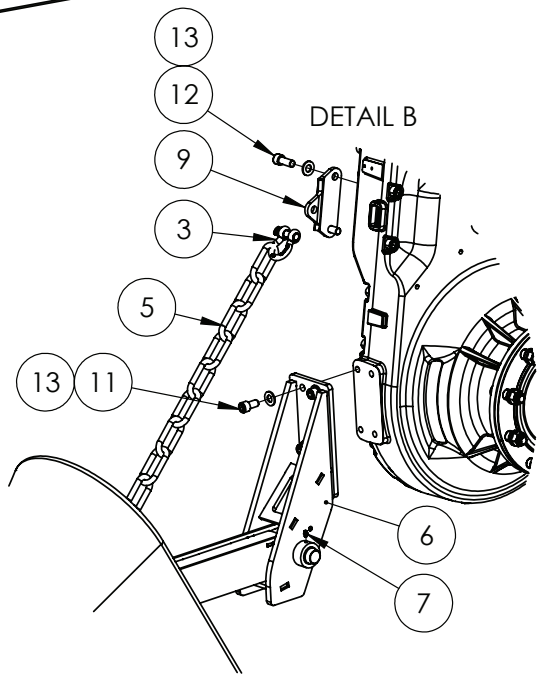

IF DESCRIPTION PREFIX IS ASSEMBLY DRAWING ONLY OR PRODUCTION DRAWING ONLY THE ITEM IS NOT FOR SALE			
ITEM	PART NUMBER	DESCRIPTION	QTY
1	GA4949705	ASSEMBLY, CROP DIVIDER, RIGHT, MY11 ONWARD	1
2	GA4949700	ASSEMBLY, NOSE CONE, CROP DIVIDER, LEFT, MY11 ONWARD	1
3	GA5075230	BOW SHACKLE 13mm WLL 3.25T BLACK	4
4	MACH0152	BUSH WITH SHOULDER, 12.3 ID X 25 OD X 21 LONG, SUIT PARALIFT PIN BOLTS	4
5	GA4909235	CHAIN, LONG LINK, 13mm, GR 80, PAINT BLACK, CUT TO LENGTH GA5065030	2
6	GA4605146	CROP DIVIDER MOUNTING BRACKET, 4WD G8 S3	2
7	GA5050450	GREASE NIPPLE, 6mm	4
8	GA4603500	PIN, CROP DIVIDER, ARM PIVOT WITH LOCKING PLATE, 1.5" OD, MY21	2
9	GA4000779	PLATE, CHAIN MOUNT, CROP DIVIDER, CROP CRUISER, S3	2
10	GA0500020	SHCS M12 X 60 GR12.9 ZP	2
11	GA5000915	SHCS M16 X 30 GR12.9 ZP	8
12	GA5000925	SHCS M16 X 40 GR12.9 ZP	4
13	GA5001043	WASHER 16mm FLAT SS HD	12
GA1100088 GOLDACRES		SALES KIT, CROP DIVIDER, FRONT & REAR, 4WD, LARGE FRAME S3	REV 00

Nose Cone Assembly, Crop Divider

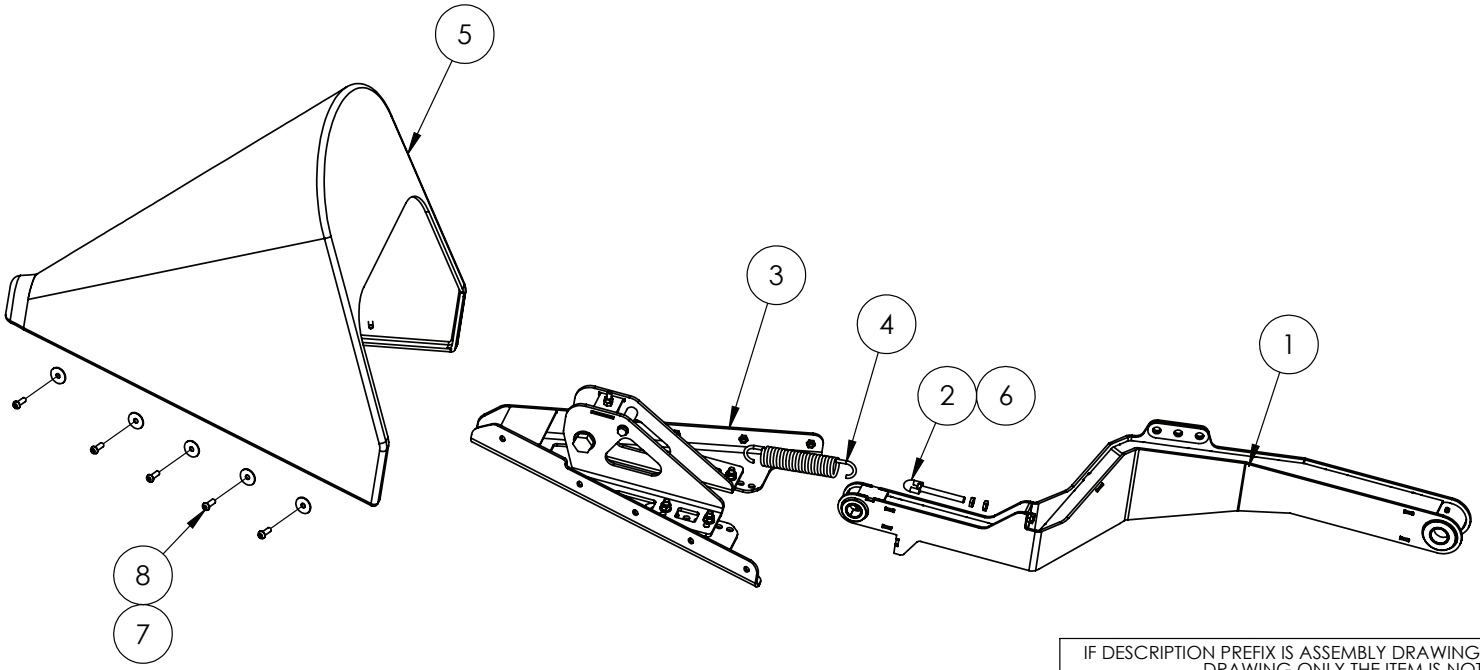

IF DESCRIPTION PREFIX IS ASSEMBLY DRAWING ONLY OR PRODUCTION DRAWING ONLY THE ITEM IS NOT FOR SALE			
ITEM	PART NUMBER	DESCRIPTION	QTY
1	GA4602565	ARM ASSEMBLY, LEFT, CROP DIVIDER, MY11 ONWARD	1
2	GA5075150	EYE BOLT 12mm X 100mm SHORT	1
3	GA4949675	NOSE CONE FRAME, CROP DIVIDER	1
4	GA5006345	SPRING SMALL BOOM 120H	1
5	GA5073735	NOSE CONE, CROP DIVIDER, MY19	1
6	GA5071280	NUT, M12 HALF LOCK NUT, ZP	4
7	GA5002595	WASHER, 3/8" X 1 1/2" OD, FLAT SS	10
8	GA5048120	BHCS M10 X 30 SS A2-70	10
GA4949700 GOLDACRES		ASSEMBLY, NOSE CONE, CROP DIVIDER, LEFT, MY11 ONWARD	REV 02

CROP DIVIDER, NOSE CONE ASSEMBLY, CROP CRUISER, MY11 0NWARD

Nose Cone Frame Assembly, Crop Divider

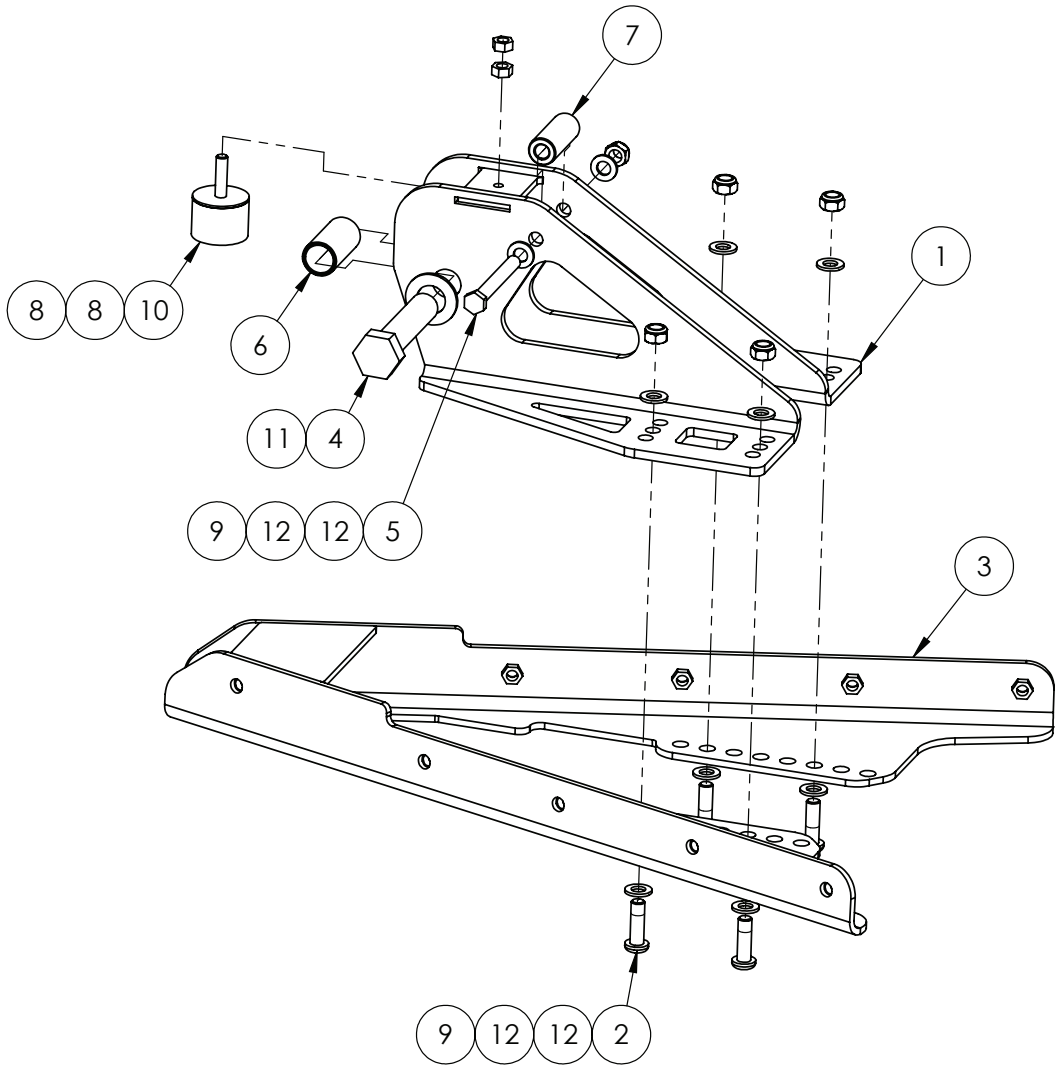

IF DESCRIPTION PREFIX IS ASSEMBLY DRAWING ONLY OR PRODUCTION DRAWING ONLY THE ITEM IS NOT FOR SALE			
ITEM	PART NUMBER	DESCRIPTION	QTY
1	GA4602530	ADJUSTER, CROP DIVIDER, MY19	1
2	GA0500079	BHCS M12 X 40 GR12.9 ZP	4
3	GA4602525	BASE, CROP DIVIDER, MY11 ONWARD	1
4	GA5006149	BOLT 1 UNC X 4 1/2 GR8 ZP	1
5	GA5000259	BOLT M12 X 100 GR8.8 ZP	1
6	GA4551350	BUSH CRUSH TUBE, CROP DIVIDER, MY19	1
7	GA4551355	BUSH, SPRING END, CROP DIVIDER, MY19	1
8	GA5012459	NUT M10 HEX ZP	2
9	GA5012461	NUT M12 NYLOC ZP	5
10	GA5052815	RUBBER STOPPER, DIAMETER 50 X 35 LONG, WITH M10 X 35 STUD	1
11	GA5001893	WASHER 1 X 1 7/8 X 14G	1
12	GA5000577	WASHER 12mm FLAT SS HD	10
GA4949675 GOLDACRES		NOSE CONE FRAME, CROP DIVIDER	REV 04

15 - Induction Hopper

Induction Hopper Mounting Assembly

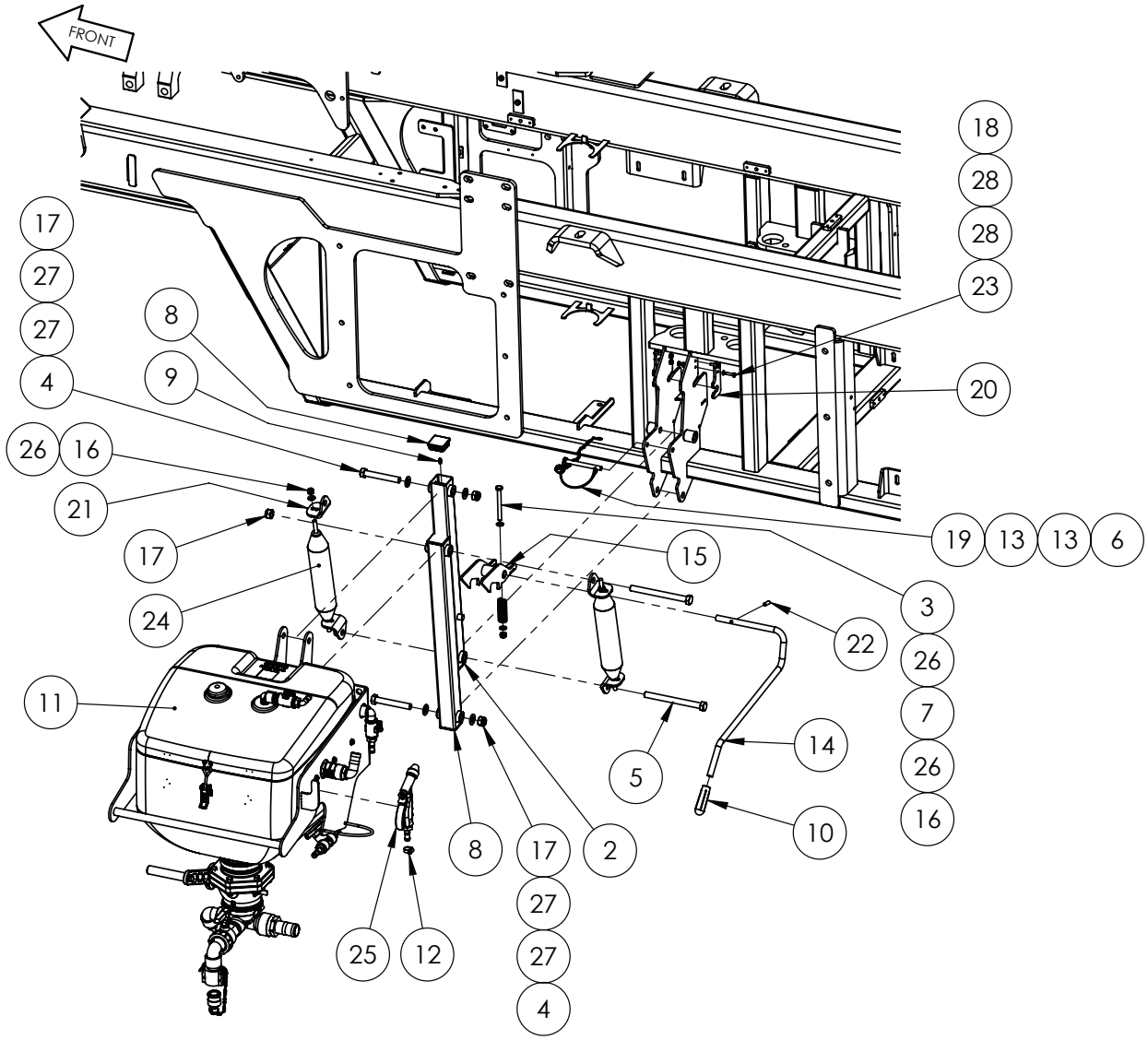

IF DESCRIPTION PREFIX IS ASSEMBLY DRAWING ONLY OR PRODUCTION DRAWING ONLY THE ITEM IS NOT FOR SALE			
ITEM	PART NUMBER	DESCRIPTION	QTY
1	GA4602315	ARM, HOPPER, LOWER, BLACK, G6 MY20	1
2	GA4602320	ARM, HOPPER, UPPER, BLACK, G6 MY20	1
3	GA5006091	BOLT M10 X 100 GR8.8 ZP	1
4	GA5000855	BOLT M16 X 110 GR8.8 ZP	2
5	GA5000879	BOLT M16 X 180 GR8.8 ZP	2
6	GA5001491	CHAIN 2 X 20 mm SS 316, 146102, 20 LINKS	0.24
7	GA5007329	COMPRESSION SPRING GOLD	1
8	GA5003783	END CAP, PLASTIC, BLACK, INSERT, RHS. 50 X 50, 0.8 - 2.5mm WALL	4
9	GA5012203	GREASE NIPPLE, SHORT, 1/4 UNF, MACH0207	4
10	GA5051610	HANDLE GRIP, ROUND, 16mm INTERNAL DIAMETER.	1
11	GA6101681	HOPPER, TANK, ASSEMBLY, G4, MY24	1
12	GA5000469	HOSE CLAMP, 1/2" SS 12-20/9W3	1
13	GA5002077	KEY RING, 25mm, SS	2
14	GA4699436	LATCH HANDLE, HOPPER, LARGE FRAME SP, MY25	1
15	GA4602325	LATCH, HOPPER, BLACK, G6 MY20	1
16	GA5000141	NUT M10 NYLOC ZP	5
17	GA5001029	NUT M16 NYLOC ZP	4
18	GA5048115	NUT M6 NYLOC ZP	4
19	GA5048380	PIN SHAFT LOCKING 11mm	1
20	GA4000316	PLATE, KEEPER, HOPPER LOCK MECHANISIM, LARGE FRAME SP, S3	2
21	GA4000037	PLATE, SPRING MOUNT, HOPPER	4
22	GA5075130	ROLL PIN M8 X 30mm COATED	1
23	GA5004073	SET SCREW M6 X 25 GR8.8 ZP	4
24	GA5025938	SPRING, TENSION, 6.3mm WIRE X 60 OD X 285 LONG, INDUCTION HOPPER	2
25	GA4950925	WASH GUN ASSEMBLY, G6 MY20	1
26	GA5000117	WASHER M10 FLAT SS HD	6
27	GA5001043	WASHER M16 FLAT SS HD	4
28	GA5004437	WASHER M6 FLAT SS HD	8
GA7800309 GOLDACRES		ASSEMBLY DRAWING ONLY, INDUCTION HOPPER, LARGE FRAME SP, S3	REV 00

Tank Assembly, Induction Hopper

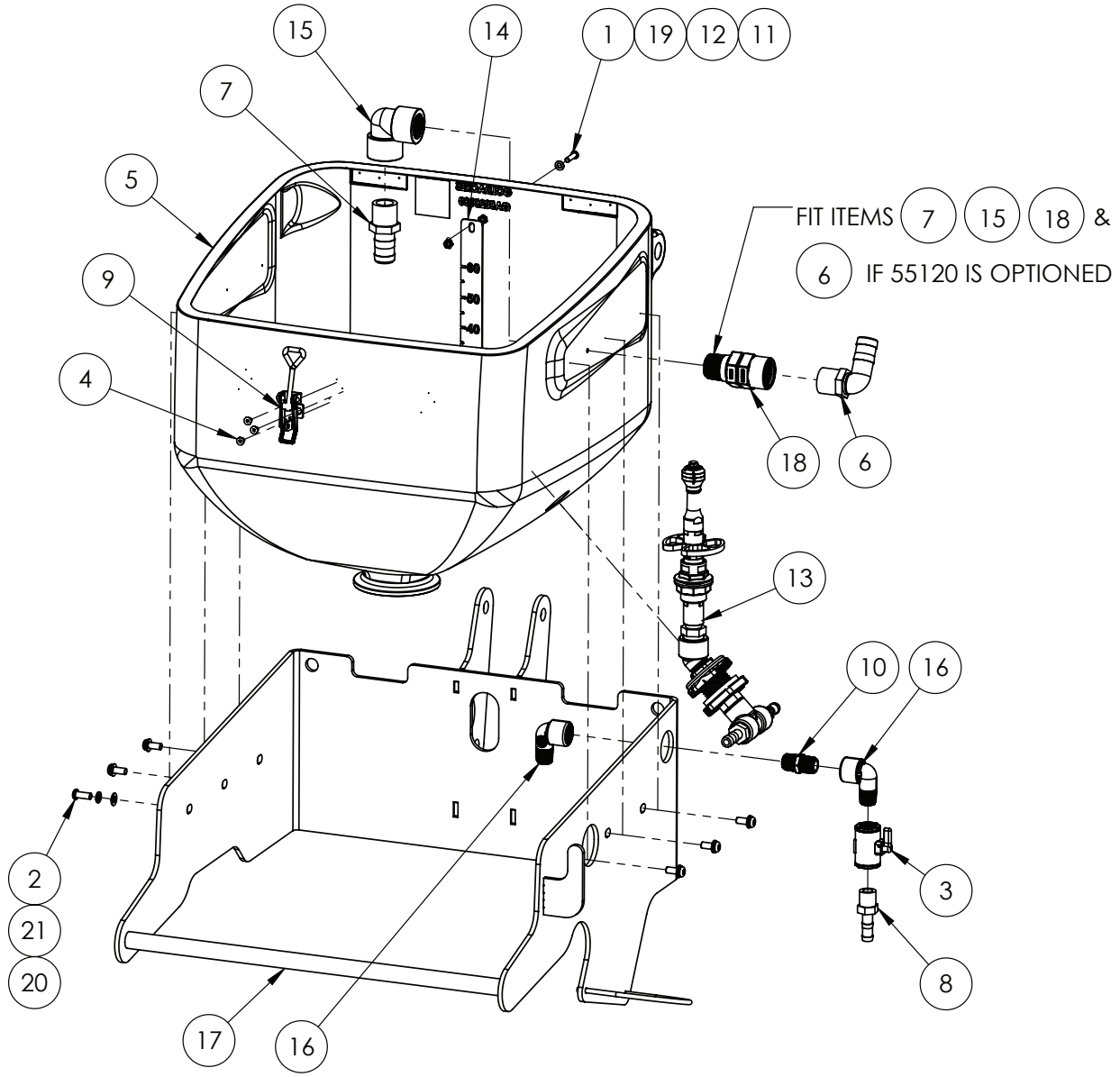

BUILD OPTION - G4 S2:
55120 - CHEMICAL TRANSFER PUMP, (SOTERA) TANK OR HOPPER FILL
BUILD OPTION - S3:
55120 - DEFAULT - CHEMICAL TRANSFER PUMP, (SOTERA) TANK OR HOPPER FILL

IF DESCRIPTION PREFIX IS ASSEMBLY DRAWING ONLY OR PRODUCTION DRAWING ONLY THE ITEM IS NOT FOR SALE

ITEM	PART NUMBER	DESCRIPTION	QTY
1	GA5004067	BHCS M6 X 25 SS A2-70	1
2	GA0500102	BHCS M8 X 20 SS A2-70	6
3	GA2000163	BALL VALVE, MICRO, 2 WAY, 1/2" NPT FEMALE THREADS, LV050V, BANJO	1
4	GA0500101	CSCS M5 X 10 SS A2-70	3
5	GA5025130	HOPPER, BODY, G6, MY20	1
6	GA5077723	HOSE BARB, ELBOW, 90 DEGREE, 1" MALE X 1" HOSE, BANJO	1
7	GA5077718	HOSE BARB, STRAIGHT, 1 MALE THREAD X 1 HOSE, BANJO	1
8	GA5077702	HOSE BARB, STRAIGHT, 1/2 MALE THREAD X 1/2 HOSE, BANJO, HB050	1
9	GA5007071	LATCH, INDUCTION HOPPER LID, STAINLESS STEEL	1
10	GA5077911	NIPPLE, SHORT, 1/2 MALE THREAD X 1/2 MALE THREAD, BANJO. NIP050-SH	1
11	GA5004429	NUT M6 NYLOC SS	1
12	GA5049030	NUT M6 SS	1
13	GA4949305	PRODUCTION DRAWING ONLY. DRUM RINSE NOZZLE, HOPPER, G6 MY20	1
14	GA4408895	Scale, Hopper, 60L Series 2	1
15	GA5077655	STREET ELBOW, 90 DEGREE, 1 FEMALE THREAD X 1 FEMALE THREAD, BANJO, EL100-90	1
16	GA5078133	STREET ELBOW, 90 DEGREE, 1/2 FEMALE THREAD X 1/2 MALE THREAD, BANJO	2
17	GA4602246	SUPPORT, HOPPER, G4, MY24	1
18	GA2000461	SWIVEL, GRP, 1" NPT MALE-FEMALE, BANJO, SW100	1
19	GA5004437	WASHER 6mm FLAT SS	1
20	GA5003643	WASHER 8mm FLAT SS HD	6
21	GA5004919	WASHER 8mm SPRING SS	6
GA6101681 GOLDACRES		HOPPER, TANK, ASSEMBLY, SP	REV 00.C

Drum Rinse Nozzle Assembly

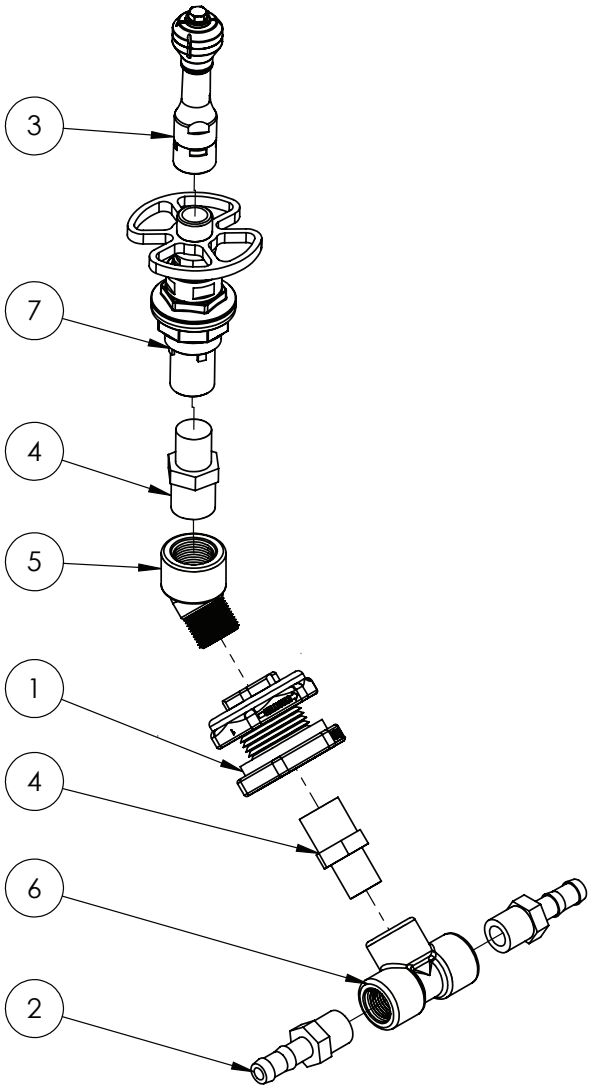

IF DESCRIPTION PREFIX IS ASSEMBLY DRAWING ONLY OR PRODUCTION DRAWING ONLY THE ITEM IS NOT FOR SALE			
ITEM	PART NUMBER	DESCRIPTION	QTY
1	GA2000162	BULKHEAD FITTING, 3/4" FEMAL THREADS, TF075, BANGO	1
2	GA5077702	HOSE BARB, STRAIGHT, 1/2 MALE THREAD X 1/2 HOSE, BANJO, HB050	2
3	GA5077063	NOZZLE, DRUM & CONTAINER ROTATING RINSING JET, ARAG, 510111	1
4	GA5078087	REDUCING NIPPLE 3/4" X 1/2"	2
5	GA5078134	STREET ELBOW, 45 DEGREE, 3/4 MALE THREAD X 3/4 FEMALE THREAD, BANJO	1
6	GA5078149	TEE, THREADED, 1/2 FEMALE, BANJO	1
7	GA5077062	VALVE, DRUM & CONTAINER RINSING NOZZLE, ARAG, 510101	1
GA4949305 GOLDACRES		PRODUCTION DRAWING ONLY. DRUM RINSE NOZZLE, HOPPER, G6 MY20	REV 00

Lid Assembly, Induction Hopper

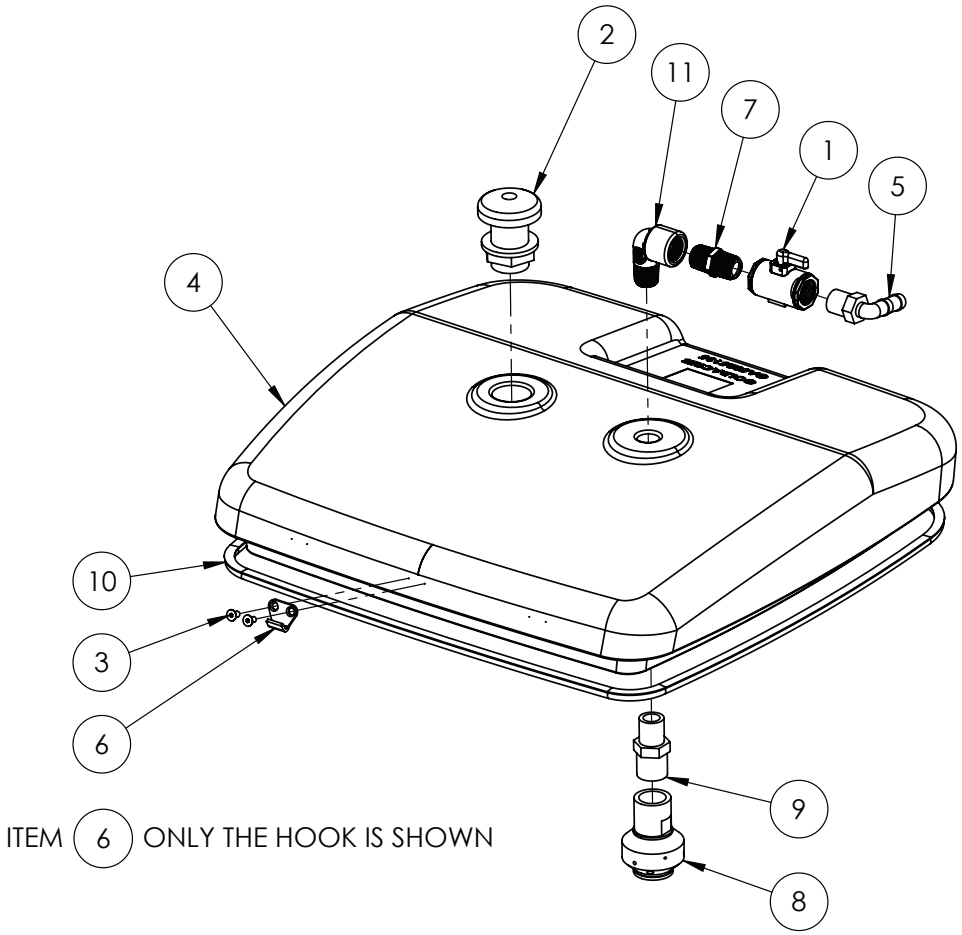

IF DESCRIPTION PREFIX IS ASSEMBLY DRAWING ONLY OR PRODUCTION DRAWING ONLY THE ITEM IS NOT FOR SALE			
ITEM	PART NUMBER	DESCRIPTION	QTY
1	GA2000163	BALL VALVE, MICRO, 2 WAY, 1/2" NPT FEMALE THREADS, LV050V, BANJO	1
2	GA5077045	BREATHER VALVE, LABYRINTH TYPE, 1" MALE THREAD, ARAG	1
3	GA0500101	CSCS M5 X 10 SS A2-70	2
4	GA5025135	HOPPER, LID,G6, MY20	1
5	GA5077708	HOSE BARB, ELBOW, 90 DEGREE, 1/2 MALE THREAD X 1/2 HOSE, BANJO, HB050-90	1
6	GA5007071	LATCH, INDUCTION HOPPER LID, STAINLESS STEEL	1
7	GA5077911	NIPPLE, SHORT, 1/2 MALE THREAD X 1/2 MALE THREAD, BANJO. NIP050-SH	1
8	GA5077336	NOZZLE, TANK RINSING, 3/4 BSPT FEMALE INLET, TEEJET	1
9	GA5078087	REDUCING NIPPLE, 3/4 MALE THREAD X 1/2 MALE THREAD, BANJO	1
10	GA5078553	SEAL, BULB, SELF ADHESIVE, 8.3mm X 9mm, CLARK RUBBER, SKU: 38954	1.8
11	GA5078133	STREET ELBOW, 90 DEGREE, 1/2 FEMALE THREAD X 1/2 MALE THREAD, BANJO	1
GA6101681 GOLDACRES		HOPPER, TANK, ASSEMBLY, SP	REV 00.C

Bottom & Lid Hinges, Induction Hopper

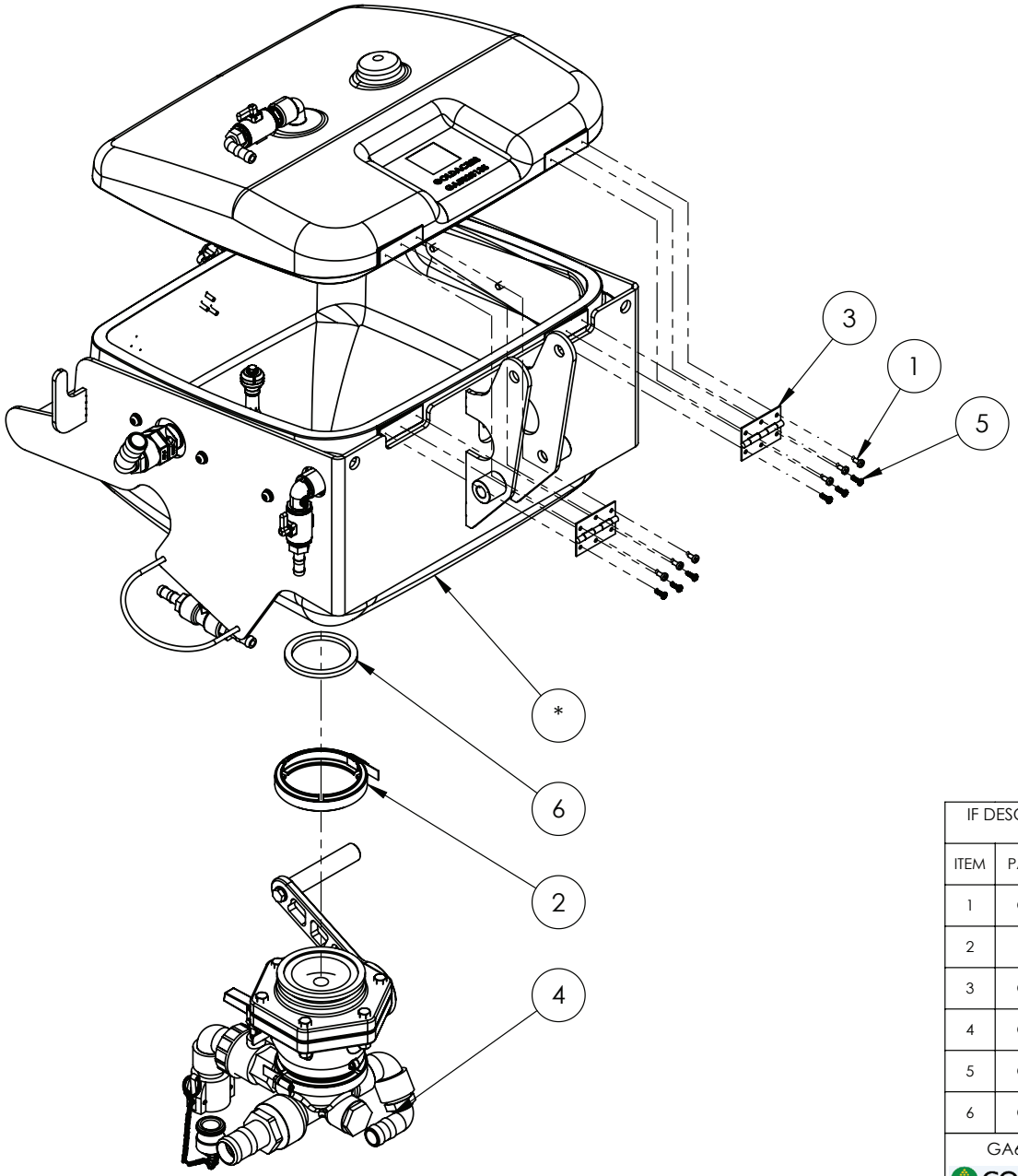

IF DESCRIPTION PREFIX IS ASSEMBLY DRAWING ONLY OR PRODUCTION DRAWING ONLY THE ITEM IS NOT FOR SALE			
ITEM	PART NUMBER	DESCRIPTION	QTY
1	GA0500099	BOLT PAN HEAD M5	6
2	FC300	CLAMP, 3" FLANGE MANIFOLD, BANJO	1
3	GA5006661	HINGE 76mm BUTT HINGE SS	2
4	GA4949285	PRODUCTION DRAWING ONLY. HOPPER BOTTOM, ASSEMBLY, G6, MY20	1
5	GA5014817	SCREW PAN HEAD 10G X 5/8 SS	6
6	GA5076723	SEAL, EPDM, SUIT 3 FLANGE FITTING, BANJO	1
GA6101681 GOLDACRES		HOPPER, TANK, ASSEMBLY, SP	REV 00.C

Ball Valve Assembly, Induction Hopper Bottom

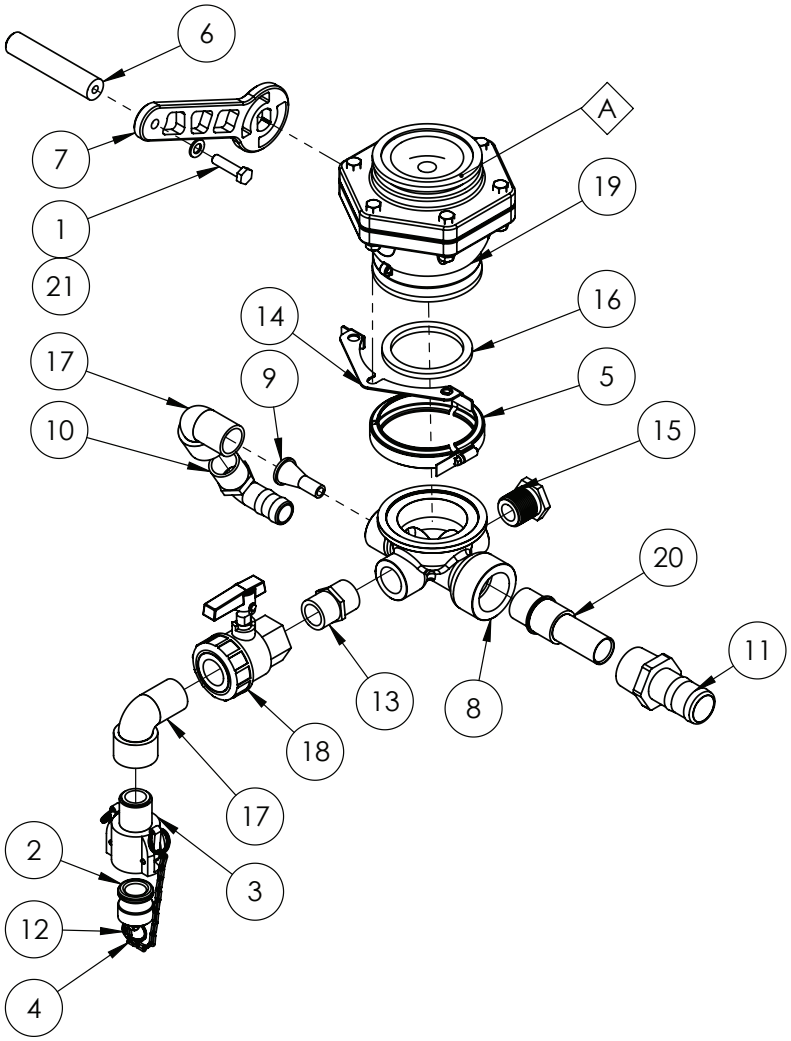

REPLACEMENT PARTS			
ITEM	PART NUMBER	DESCRIPTION	QTY
A	GA2000301	REPAIR KIT, BALL VALVE 3", SUIT GA2000119, BANJO, VS35200	-

IF DESCRIPTION PREFIX IS ASSEMBLY DRAWING ONLY OR PRODUCTION DRAWING ONLY THE ITEM IS NOT FOR SALE			
ITEM	PART NUMBER	DESCRIPTION	QTY
1	GA5006079	BOLT M10 X 40 SS A2-70	1
2	GA5076005	CAM LEVER, MALE PLUG, SUITS 1 & 1 1/4 COUPLINGS, BANJO	1
3	GA5076007	CAM LEVER, 1 FEMALE COUPLER, 1 MALE THREAD, BANJO	1
4	GA5001491	Chain 2 x 20 mm SS 316, 146102, Cut 150mm	0.15
5	FC300	CLAMP, 3" FLANGE MANIFOLD, BANJO	1
6	GA4551515	FOOT ACTIVATED HANDLE, HOPPER, G6 MY20	1
7	GA4406215	HANDLE, 3" BALL VALVE, HOPPER BOTTOM, G6 MY20	1
8	GA5078605	HOPPER BOTTOM, MOULDED	1
9	L057A	HOPPER JET TAPERED 9mm	1
10	GA5077723	HOSE BARB 90 DEGREE 1" BANJO	1
11	GA5077731	HOSE BARB, STRAIGHT, 1 1/2 MALE THREAD X 1 1/2 HOSE, BANJO	1
12	GA5002077	KEY RING, 25mm, SS	1
13	GA5077914	NIPPLE, SHORT, 1" MALE THREAD X 1" MALE THREAD, BANJO	1
14	GA4412695	PLATE, VALVE STOP, 3", STUBBY, BANJO, MVS300CFFP, HOPPER	1
15	GA5077945	PLUG, 1 MALE THREAD, BANJO	1
16	GA5076723	SEAL, EPDM, SUIT 3 FLANGE FITTING, BANJO	1
17	GA5078137	STREET ELBOW, 90 DEGREE, 1 MALE X 1 FEMALE, BANJO	2
18	GA5078164	VALVE, BALL, 1 FEMALE THREAD INLET / OUTLET, FULL PORT, LEVER HANDLE, BANJO	1
19	GA4912900	VALVE, BALL, 3", BANJO, MVS300CFFP, DRILLED, SUIT HOPPER BOTTOM	1
20	GA4551895	VENTURI, HOPPER BOTTOM, DIA. 20mm	1
21	GA5000117	WASHER 10mm FLAT SS HD	1
GA4949285 GOLDACRES		PRODUCTION DRAWING ONLY. HOPPER BOTTOM, ASSEMBLY, G6, MY20	REV 05.B

Wash Down Gun Assembly

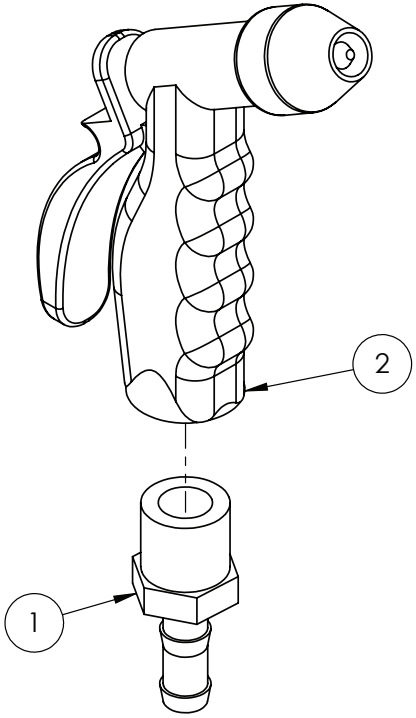

IF DESCRIPTION PREFIX IS ASSEMBLY DRAWING ONLY OR PRODUCTION DRAWING ONLY THE ITEM IS NOT FOR SALE			
ITEM	PART NUMBER	DESCRIPTION	QTY
1	GA5077713	HOSE BARB, STRAIGHT, 3/4 MALE THREAD X 1/2 HOSE, BANJO	1
2	GA5051390	WASH DOWN GUN WATER SPRAY	1
GA4950925 GOLDACRES		WASH GUN ASSEMBLY, G6 MY20	REV 00

16 - Bonnet

Bonnet, Series 3

REPLACEMENT PARTS			
ITEM	PART NUMBER	DESCRIPTION	QTY
-	GA5026124	BONNET, TR3, MY25, BADGE, GOLDACRES SPRAY	-
-	GA5026114	BONNET, TR3, MY25, BADGE, MODEL G8-S3	-
-	GA5026067	BONNET, TR3, MY25, BADGE, GOLDACRES NAME	-

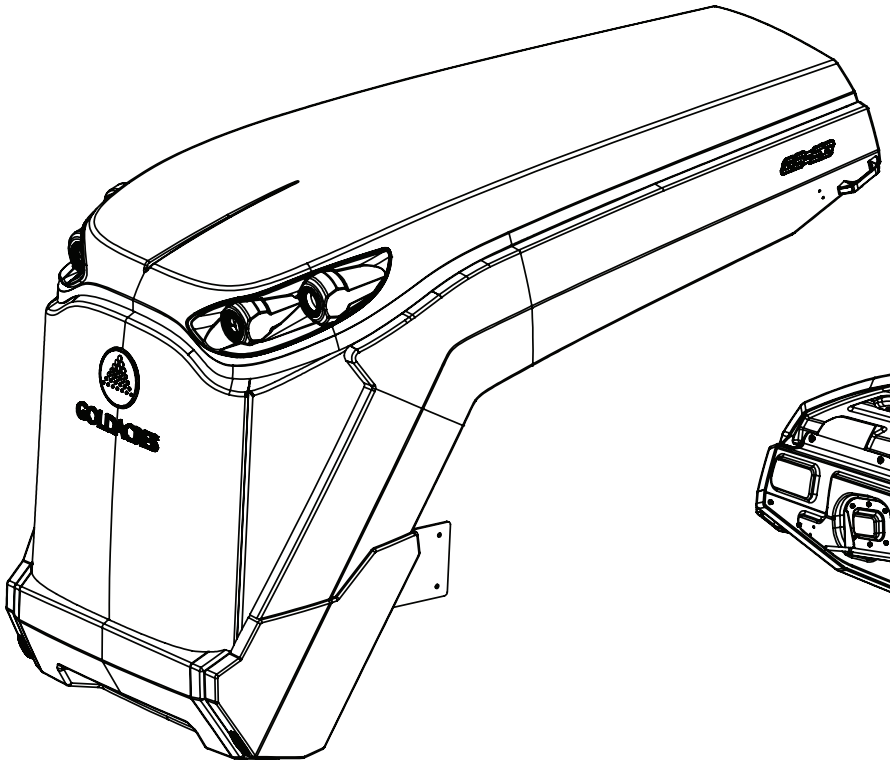

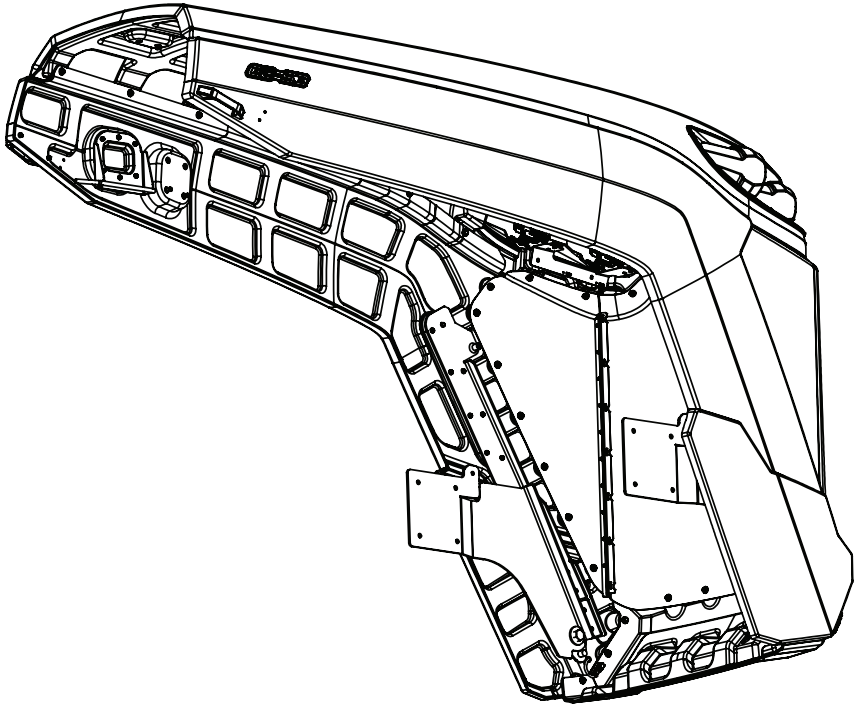

GA4909434 GOLDACRES	BONNET, TR3BONNET, TR3, MY25	REV 01.A

Latching Assembly and Handle, Bonnet

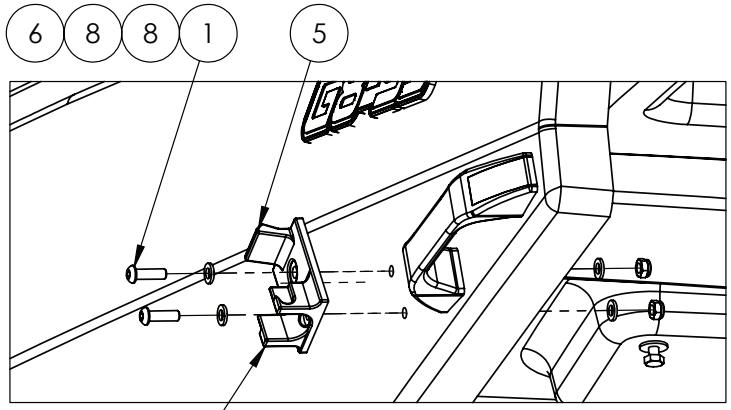

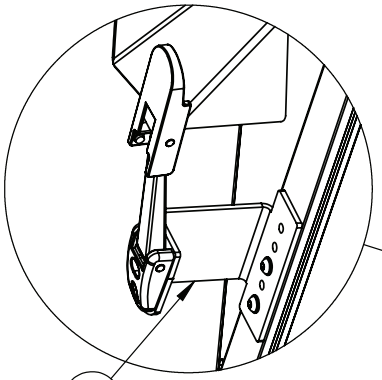

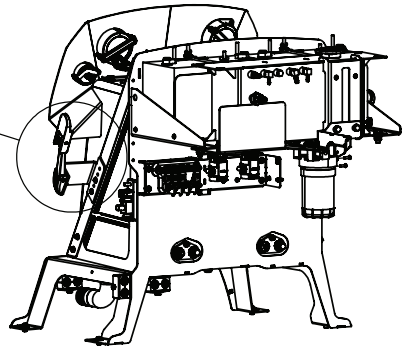

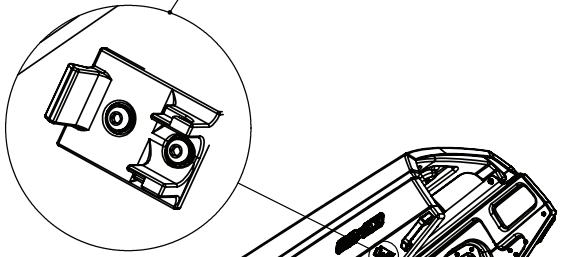

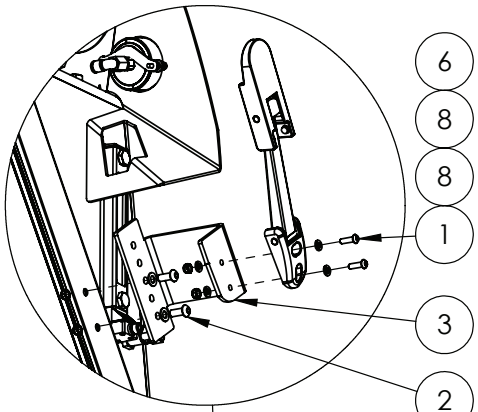

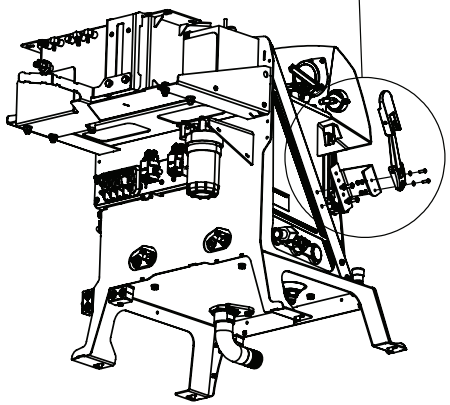

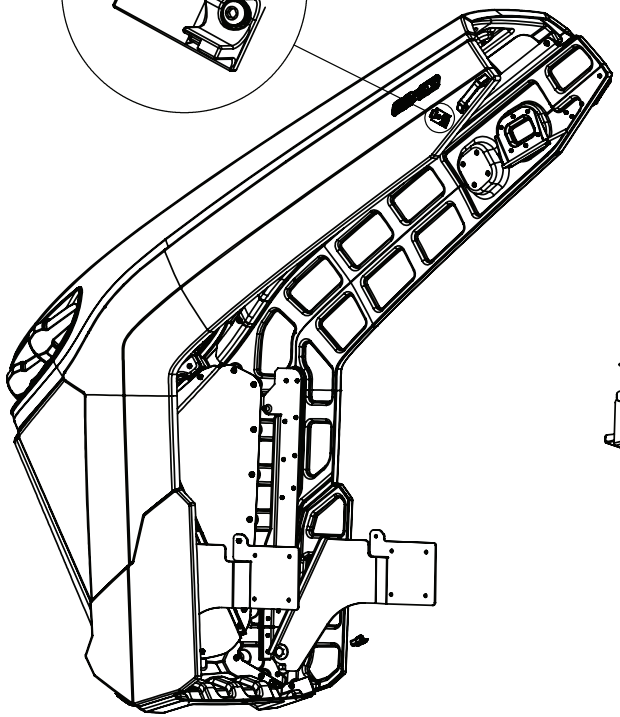

IF DESCRIPTION PREFIX IS ASSEMBLY DRAWING ONLY OR PRODUCTION DRAWING ONLY THE ITEM IS NOT FOR SALE			
ITEM	PART NUMBER	DESCRIPTION	QTY
1	GA5004053	BHCS M6 X 20 SS A2-70	8
2	GA0500102	BHCS M8 X 20 SS A2-70	4
3	GA4000247	BONNET, TR3, MY25, LEFT LATCH BRACKET	1
4	GA4000317	BONNET, TR3, MY25, RIGHT LATCH BRACKET	1
5	GA5066595	LATCH, FLEXIBLE DRAW, LEVER ASSISTED, BLACK, NYLON, RUBBER, SUIT BONNET & LADDER	2
6	GA5004429	NUT M6 NYLOC SS	8
7	GA5052590	NUT M8 NYLOC SS	4
8	GA5004437	WASHER M6 FLAT SS HD	16
9	GA5003651	WASHER M8 FLAT SS	4
GA7800336 GOLDACRES		ASSEMBLY DRAWING ONLY, BONNET, TR3, MY25, LATCH STOP, STRAPS	REV 00

Latching Assembly, Hydraulic Reservoir, Bonnet

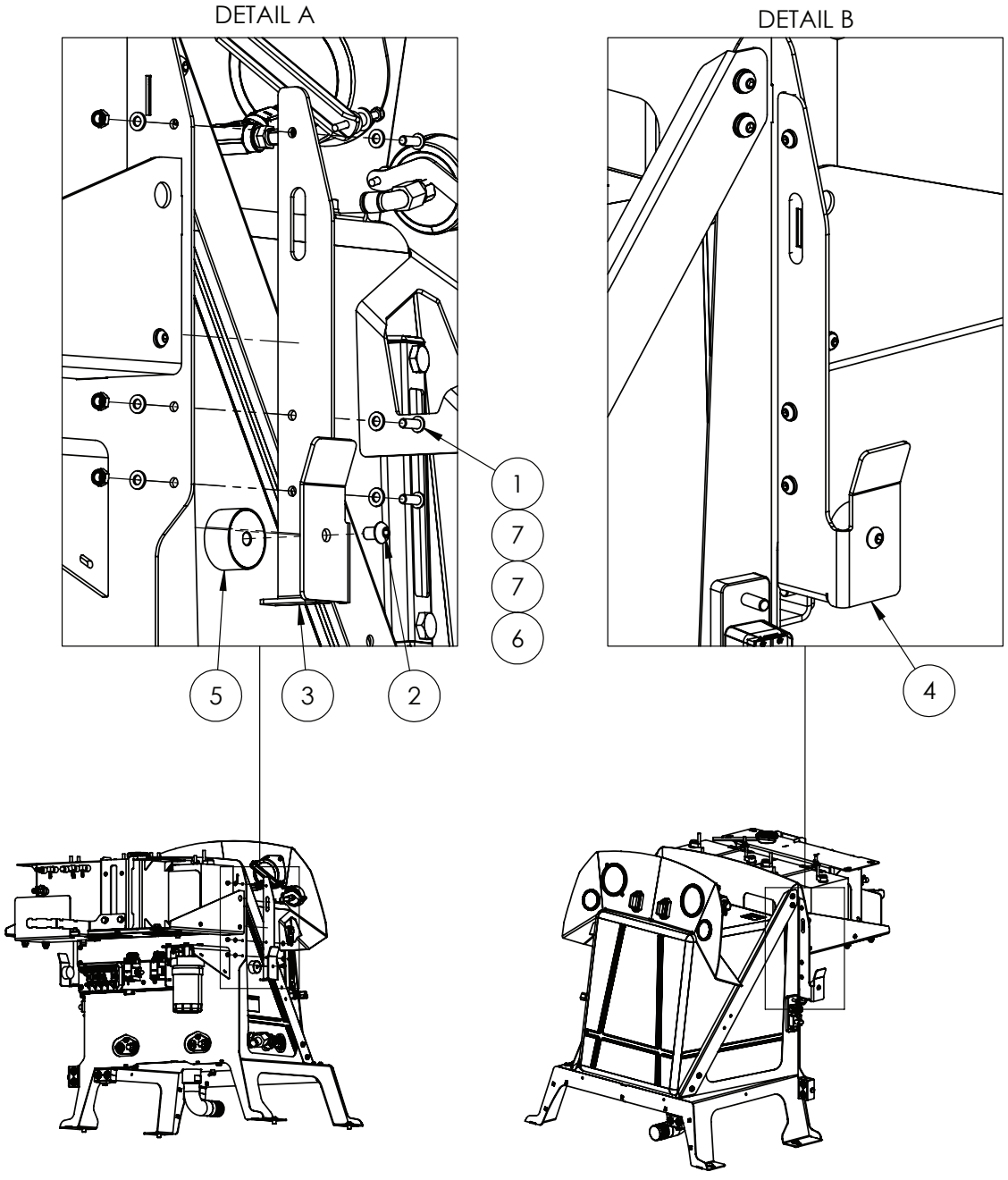

IF DESCRIPTION PREFIX IS ASSEMBLY DRAWING ONLY OR PRODUCTION DRAWING ONLY THE ITEM IS NOT FOR SALE			
ITEM	PART NUMBER	DESCRIPTION	QTY
1	GA5004050	BHCS M6 X 16 SS A2-70	6
2	GA5026272	BHCS M8 X 12 SS A2-69	2
3	GA4000314	BONNET, TR3, MY25, LATCH STOP, LEFT FIXED BRACKET, SHEET	1
4	GA4000315	BONNET, TR3, MY25, LATCH STOP, RIGHT FIXED BRACKET, SHEET	1
5	GA5026030	BUMPER, POLYURETHANE, STEEL BASE, M8 FEMALE THREAD, 20mm HEIGHT, 40mm OD	2
6	GA5004429	NUT M6 NYLOC SS	6
7	GA5004437	WASHER M6 FLAT SS HD	12
GA7800444 GOLDACRES		ASSEMBLY DRAWING ONLY, BONNET, TR3, MY25, LATCH STOP, CATCHES	REV 00.C

Strut Mounting, Bonnet

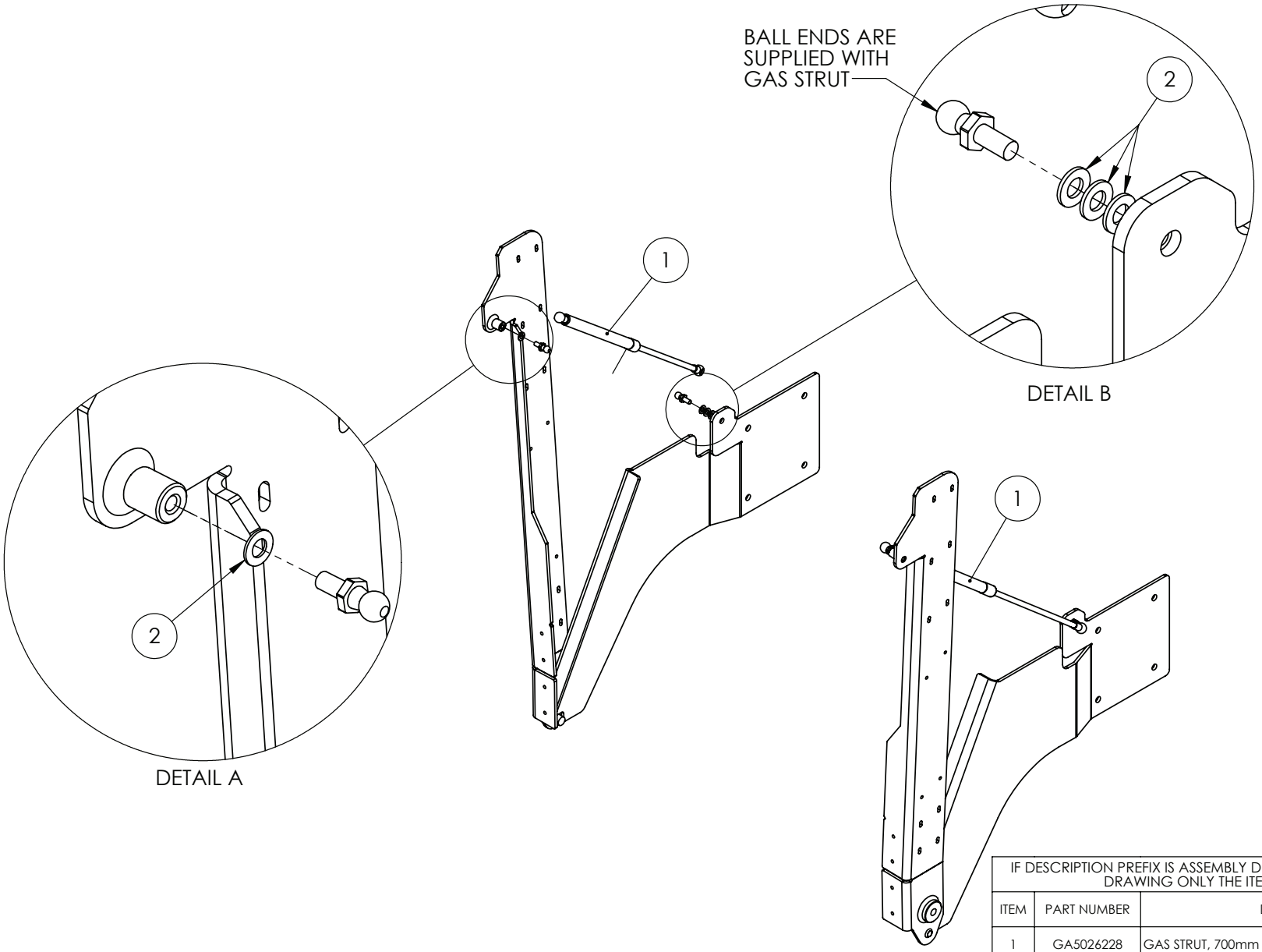

IF DESCRIPTION PREFIX IS ASSEMBLY DRAWING ONLY OR PRODUCTION DRAWING ONLY THE ITEM IS NOT FOR SALE			
ITEM	PART NUMBER	DESCRIPTION	QTY
1	GA5026228	GAS STRUT, 700mm LENGTH, 295mm STROKE, 200N	2
2	GA5003643	WASHER M8 FLAT SS HD	8
GA7800361 GOLDACRES		ASSEMBLY DRAWING ONLY, BONNET, TR3, MY25, GAS STRUT	REV 01.A

Mounting Brackets, Bonnet

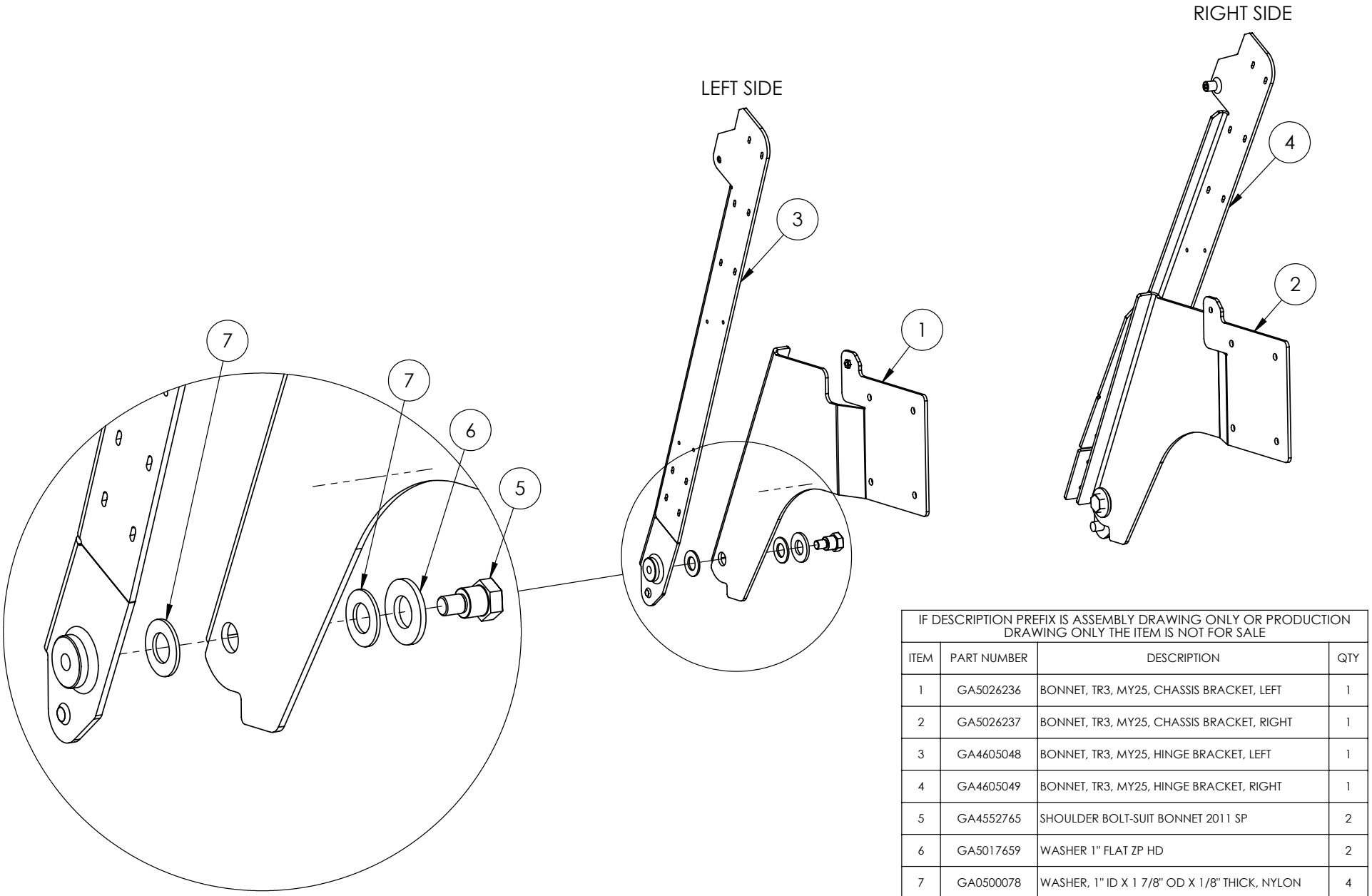

IF DESCRIPTION PREFIX IS ASSEMBLY DRAWING ONLY OR PRODUCTION DRAWING ONLY THE ITEM IS NOT FOR SALE			
ITEM	PART NUMBER	DESCRIPTION	QTY
1	GA5026236	BONNET, TR3, MY25, CHASSIS BRACKET, LEFT	1
2	GA5026237	BONNET, TR3, MY25, CHASSIS BRACKET, RIGHT	1
3	GA4605048	BONNET, TR3, MY25, HINGE BRACKET, LEFT	1
4	GA4605049	BONNET, TR3, MY25, HINGE BRACKET, RIGHT	1
5	GA4552765	SHOULDER BOLT-SUIT BONNET 2011 SP	2
6	GA5017659	WASHER 1" FLAT ZP HD	2
7	GA0500078	WASHER, 1" ID X 1 7/8" OD X 1/8" THICK, NYLON	4
GA7800306 GOLDACRES		ASSEMBLY DRAWING ONLY, BONNET, TR3, MY25, CHASSIS PLATES	REV 01.A

D-Handle Mounting, Bonnet

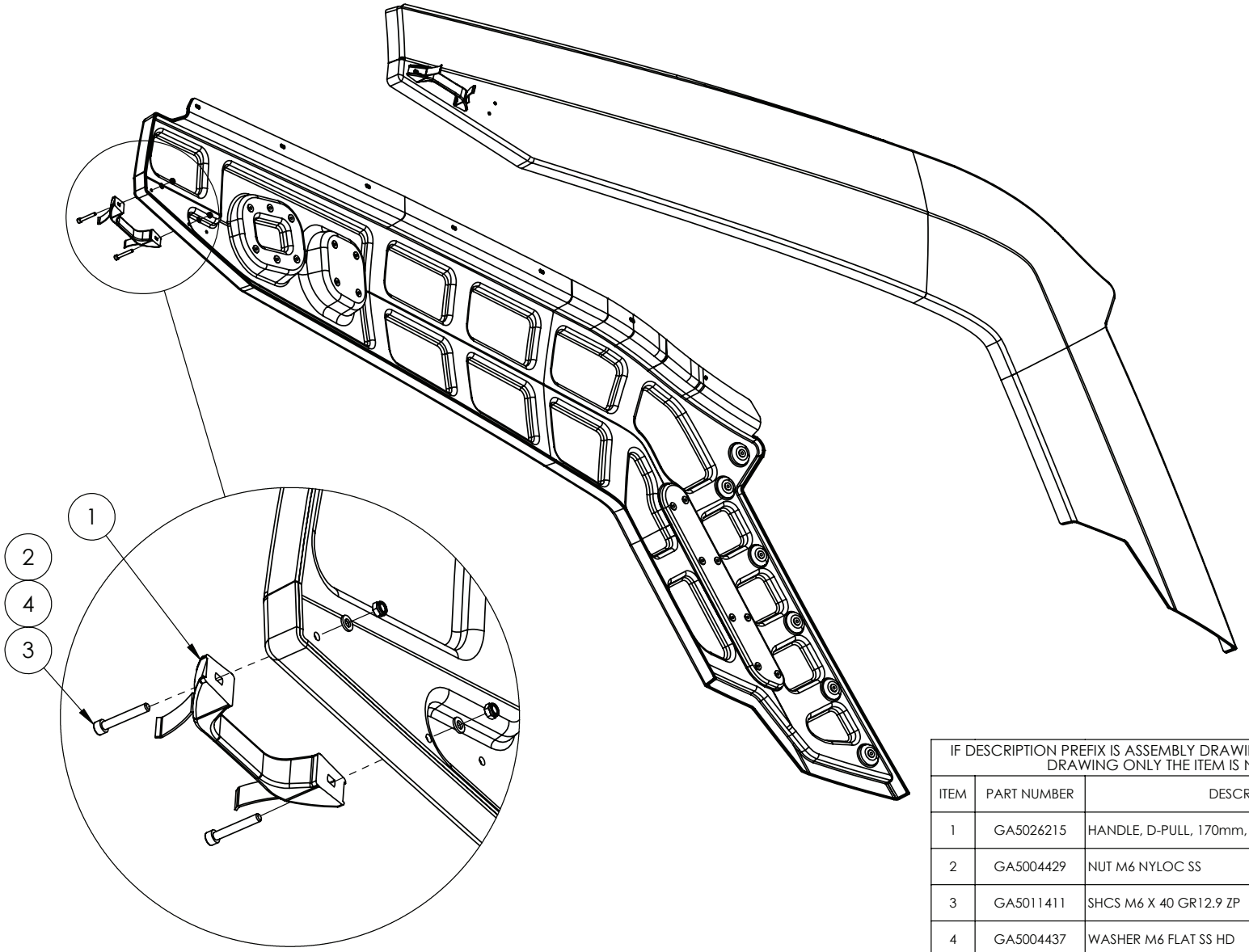

IF DESCRIPTION PREFIX IS ASSEMBLY DRAWING ONLY OR PRODUCTION DRAWING ONLY THE ITEM IS NOT FOR SALE			
ITEM	PART NUMBER	DESCRIPTION	QTY
1	GA5026215	HANDLE, D-PULL, 170mm, POLYAMIDE, BLACK	2
2	GA5004429	NUT M6 NYLOC SS	4
3	GA5011411	SHCS M6 X 40 GR12.9 ZP	4
4	GA5004437	WASHER M6 FLAT SS HD	4
GA7800388 GOLDACRES		ASSEMBLY DRAWING ONLY, BONNET, TR3, MY25, HANDLES	REV 00.A

Latch Stop Bracket, Bonnet

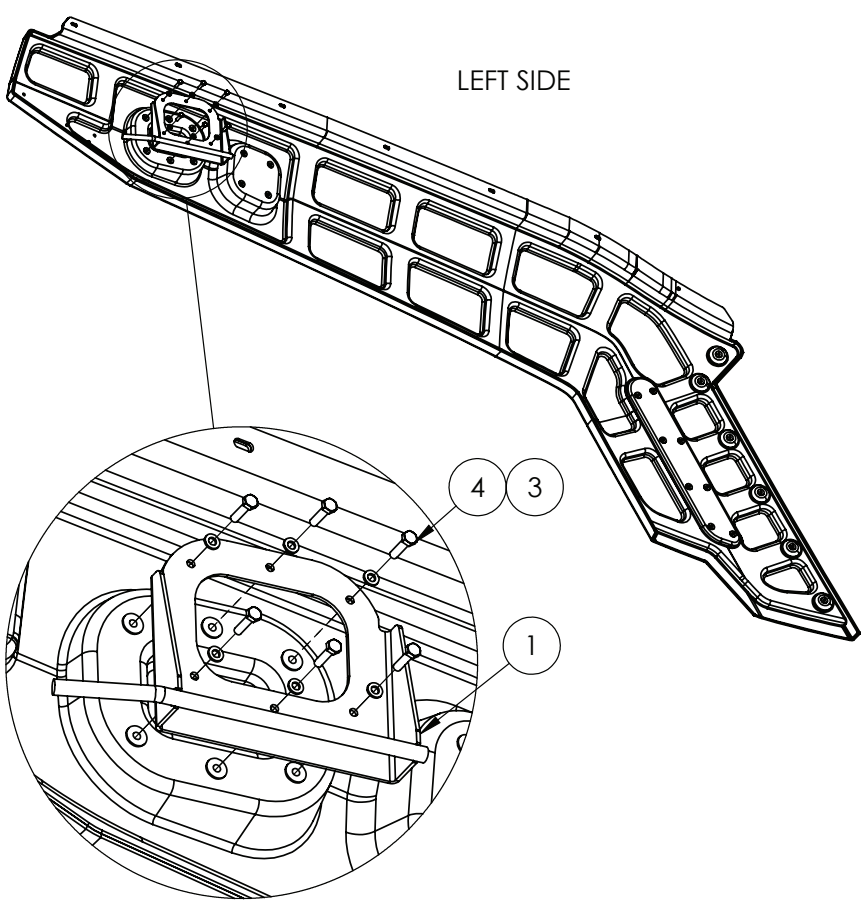

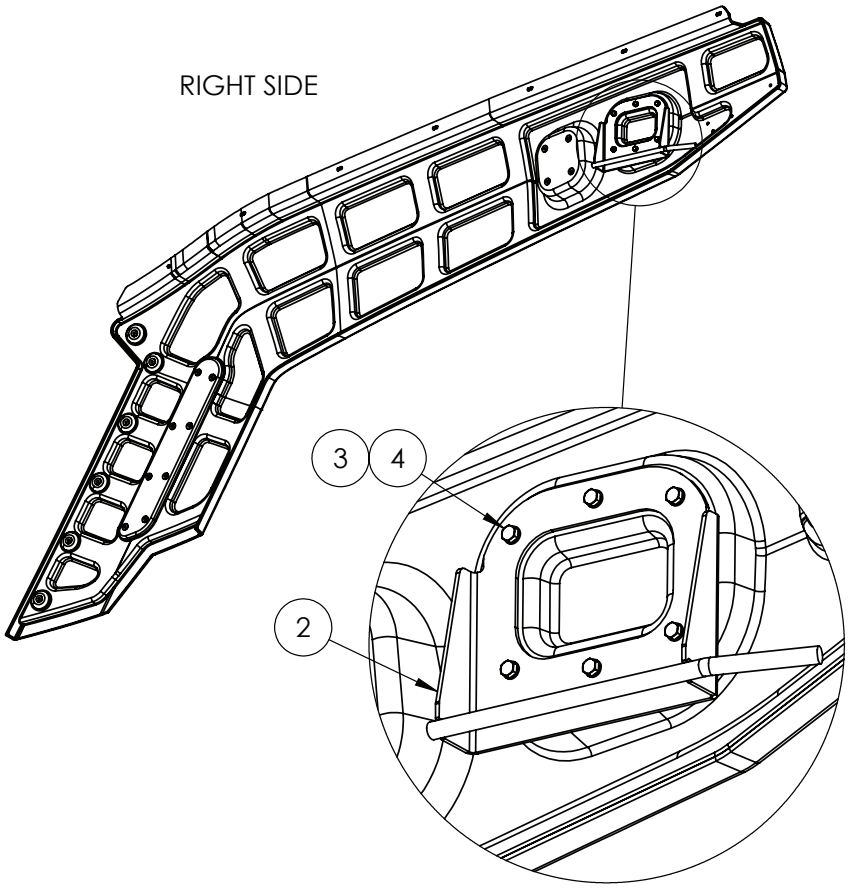

IF DESCRIPTION PREFIX IS ASSEMBLY DRAWING ONLY OR PRODUCTION DRAWING ONLY THE ITEM IS NOT FOR SALE			
ITEM	PART NUMBER	DESCRIPTION	QTY
1	GA4605066	BONNET, TR3, MY25, LATCH STOP, PANEL BRACKET LEFT	1
2	GA5026212	BONNET, TR3, MY25, LATCH STOP, PANEL BRACKET RIGHT	1
3	GA5004437	WASHER M6 FLAT SS HD	12
4	GA5004073	SET SCREW M6 X 25 GR8.8 ZP	12
GA7800335 GOLDACRES		TITLE ASSEMBLY DRAWING ONLY, BONNET, TR3, MY25, LATCH STOP, PANEL BRACKET	REV 00.D

Heat Shield, Bonnet

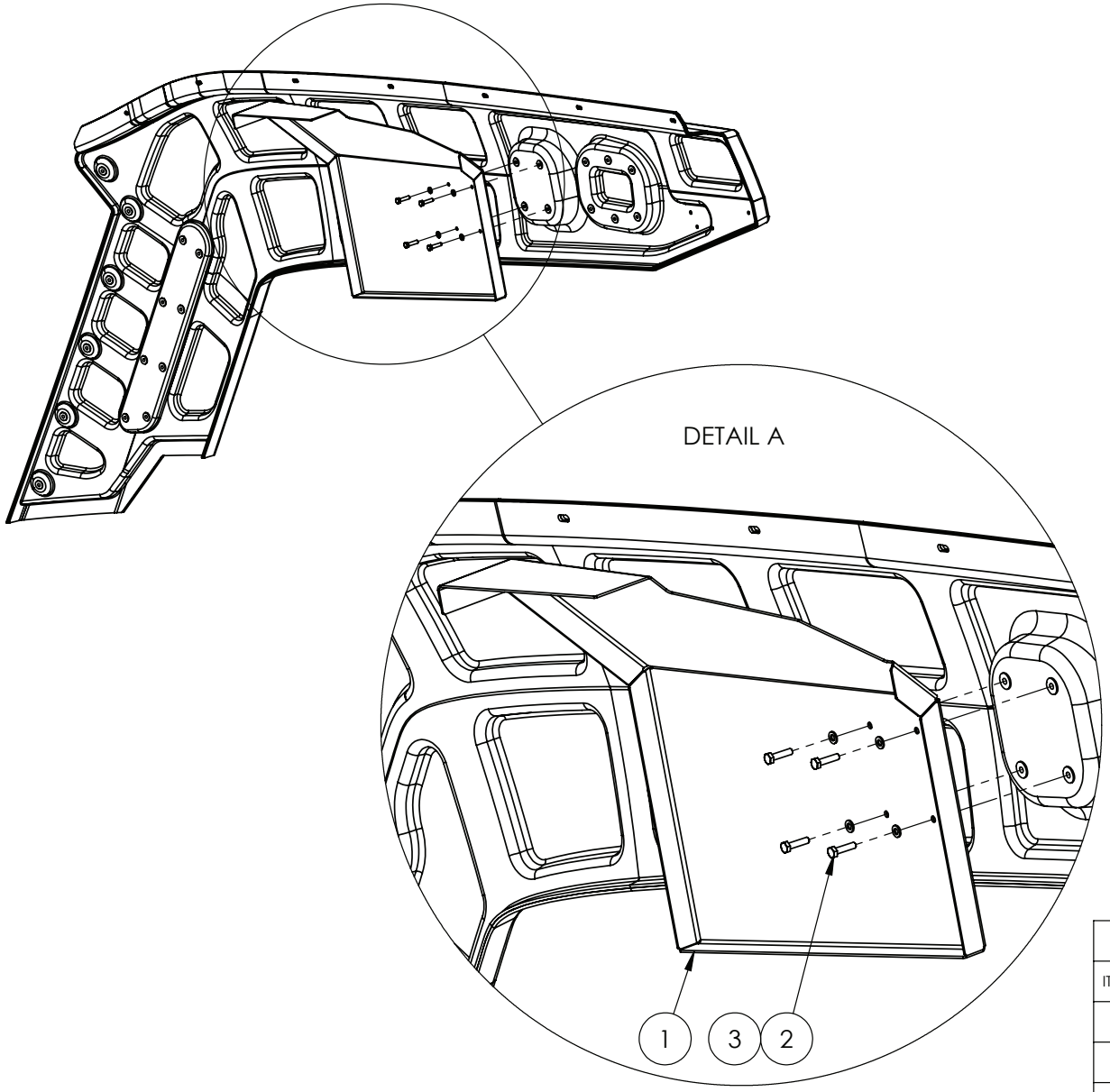

IF DESCRIPTION PREFIX IS ASSEMBLY DRAWING ONLY OR PRODUCTION DRAWING ONLY THE ITEM IS NOT FOR SALE			
ITEM	PART NUMBER	DESCRIPTION	QTY
1	GA4000488	BONNET, TR3, MY25, HEAT SHIELD, RIGHT	1
2	GA5004073	SET SCREW M6 X 25 GR8.8 ZP	4
3	GA5004437	WASHER M6 FLAT SS HD	4
GA7800389 GOLDACRES		ASSEMBLY DRAWING ONLY, BONNET, TR3, MY25, HEATSHIELD	REV 00.A

Headlight Assembly, Mounting, Bonnet

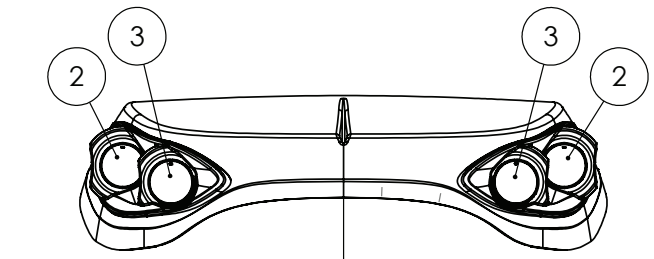

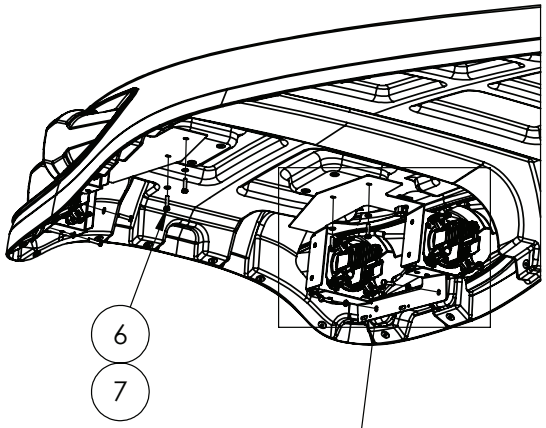

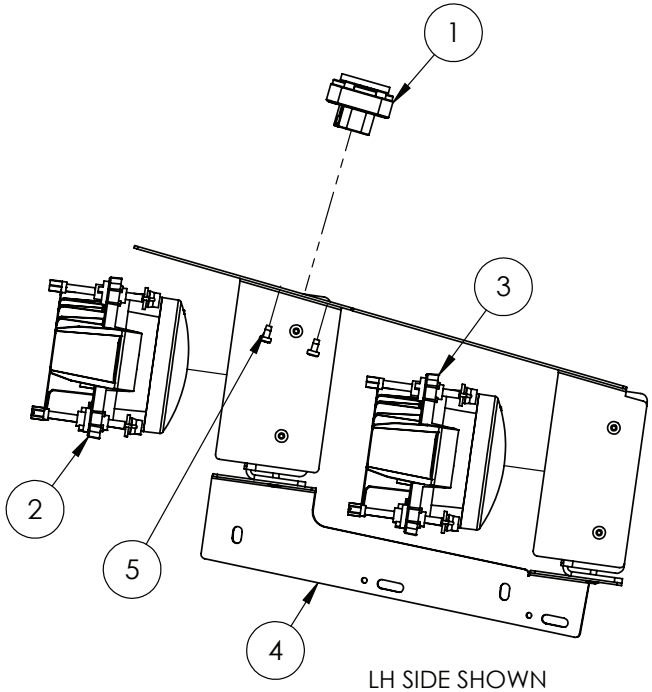

LH SIDE SHOWN

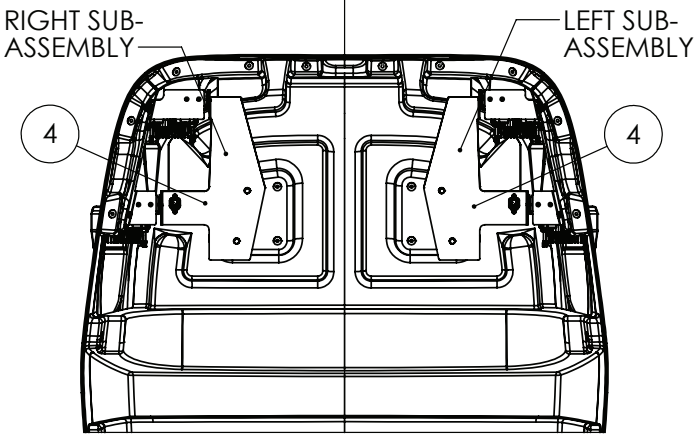

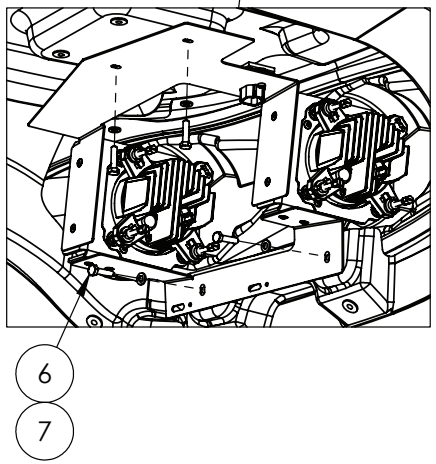

IF DESCRIPTION PREFIX IS ASSEMBLY DRAWING ONLY OR PRODUCTION DRAWING ONLY THE ITEM IS NOT FOR SALE			
ITEM	PART NUMBER	DESCRIPTION	QTY
1	GA3001217	ELECTRICAL MODULE, BONNET, HEADLIGHT INDICATOR BYPASS, SP S3	2
2	GA5026163	HEADLIGHT, 90mm, LED, HIGH BEAM, WITH DRL AND INDICATOR	2
3	GA5026126	HEADLIGHT, 90mm, LED, LOW BEAM, WITH DRL	2
4	GA4909533	PRODUCTION DRAWING ONLY, BONNET, TR3, MY25, HEADLIGHT BRACKET, PAIR	1
5	GA0500166	SCREW, SELF TAP, TORX, PAN HEAD, DIN7500, M4, 8MM, ZP S	4
6	GA5004073	SET SCREW M6 X 25 GR8.8 ZP	8
7	GA5004437	WASHER M6 FLAT SS HD	8
GA7800331 GOLDACRES		ASSEMBLY DRAWING ONLY, BONNET, TR3, MY25, HEADLIGHTS	REV 01

Headlight Bracket Assembly, Bonnet

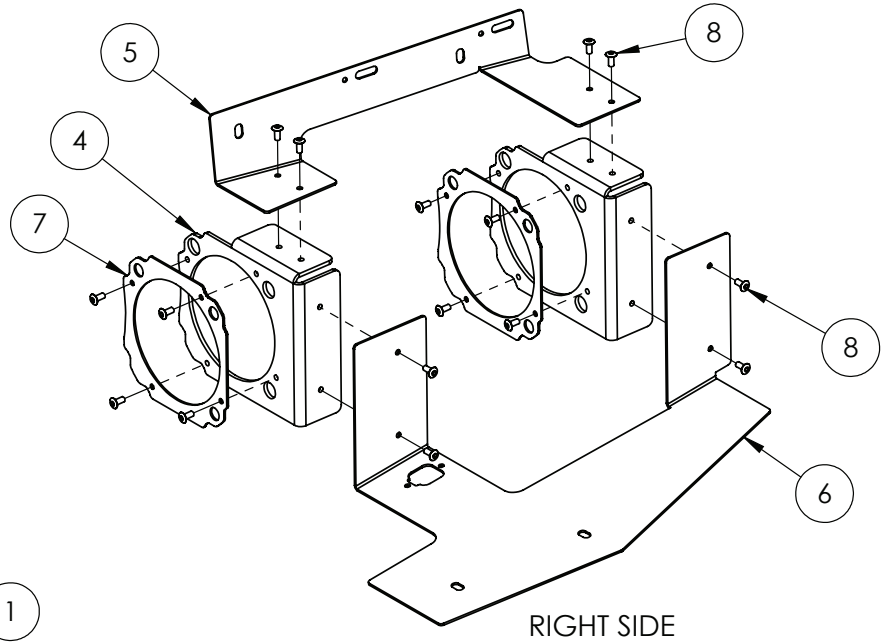

RIGHT SIDE

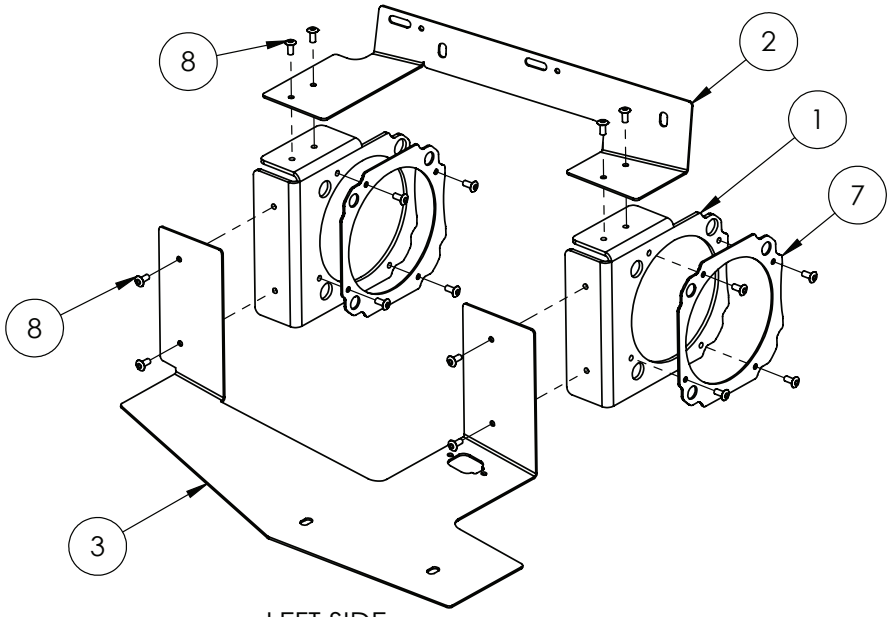

LEFT SIDE

IF DESCRIPTION PREFIX IS ASSEMBLY DRAWING ONLY OR PRODUCTION DRAWING ONLY THE ITEM IS NOT FOR SALE			
ITEM	PART NUMBER	DESCRIPTION	QTY
1	GA4000305	BONNET, TR3, MY25, HEADLIGHT BRACKET, LEFT BACKING	2
2	GA4000307	BONNET, TR3, MY25, HEADLIGHT BRACKET, LEFT LOWER	1
3	GA4000306	BONNET, TR3, MY25, HEADLIGHT BRACKET, LEFT UPPER	1
4	GA4000308	BONNET, TR3, MY25, HEADLIGHT BRACKET, RIGHT BACKING	2
5	GA4000310	BONNET, TR3, MY25, HEADLIGHT BRACKET, RIGHT LOWER	1
6	GA4000309	BONNET, TR3, MY25, HEADLIGHT BRACKET, RIGHT UPPER	1
7	GA4000304	BONNET, TR3, MY25, HEADLIGHT BRACKET, SNAP PLATE	4
8	GA0500185	RIVET, BLIND, DOME, 5-3, SS 304	32
GA4909533 GOLDACRES		PRODUCTION DRAWING ONLY, BONNET, TR3, MY25, HEADLIGHT BRACKET, PAIR	REV 00.C

Indicators, Bonnet

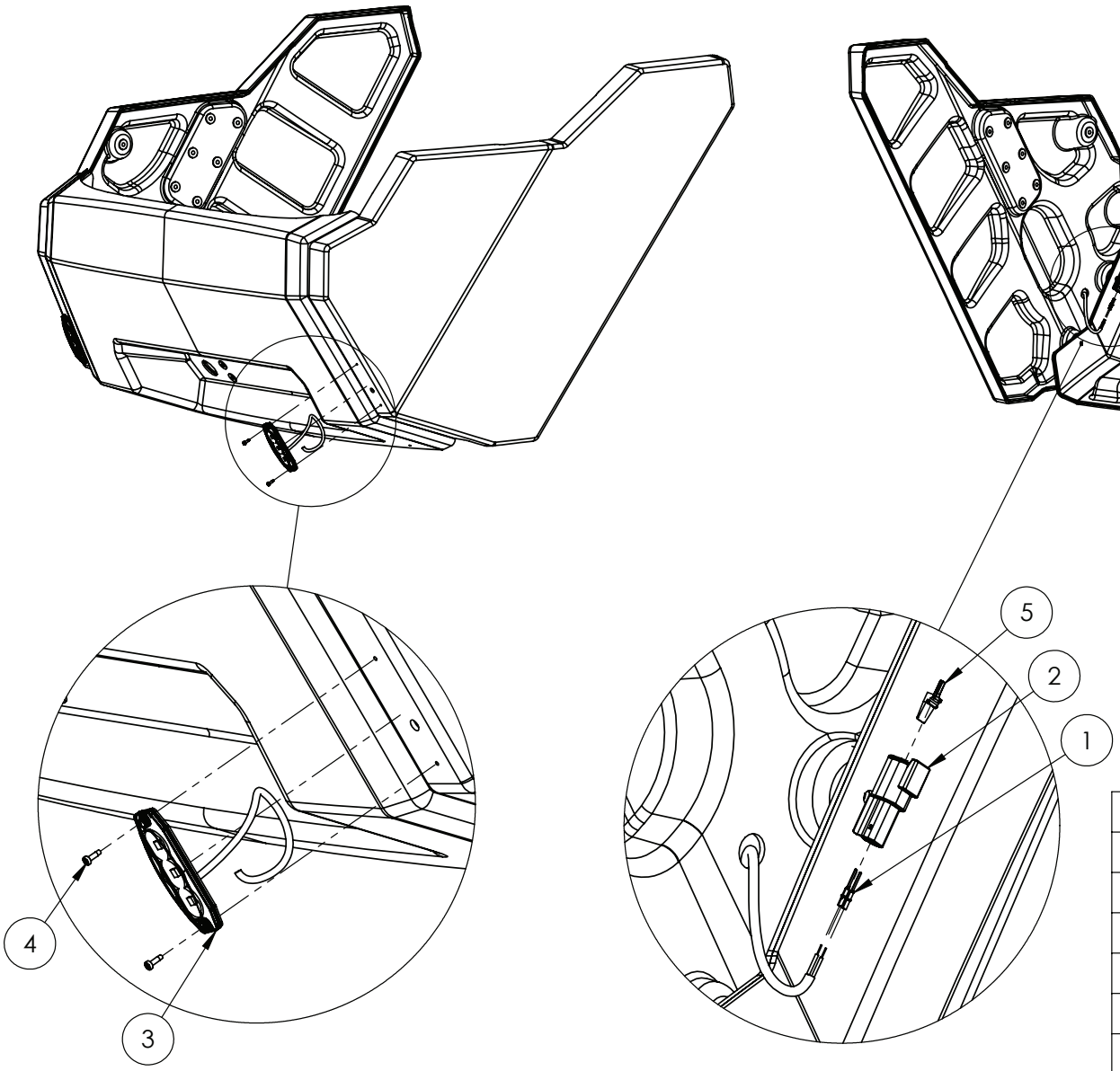

IF DESCRIPTION PREFIX IS ASSEMBLY DRAWING ONLY OR PRODUCTION DRAWING ONLY THE ITEM IS NOT FOR SALE			
ITEM	PART NUMBER	DESCRIPTION	QTY
1	GA3001165	CONNECTOR, DEUTSCH, CONTACT, PIN, SOLID, SIZE 20, AWG 16-18, NICKEL, 0460-010-20141	4
2	GA5026174	CONNECTOR, DEUTSCH, DTM, 2 PIN, PLUG, HOUSING, DTM06-2P	2
3	GA5025916	INDICATOR, TURN SIGNAL, FRONT, CLEAR LENS, 12-24V, 89X30X8	2
4	GA0500188	SCREW, SELF TAP, TORX, PAN HEAD, DIN7500, M3, 10mm, ZP S	4
5	GA5026175	WEDGE LOCK, ORANGE, 2 PIN, DEUTSCH, WM-2P	2
GA7800357 GOLDACRES		ASSEMBLY DRAWING ONLY, BONNET, TR3, MY25, INDICATORS	REV 00.B

Light Bar, Mounting, Bonnet

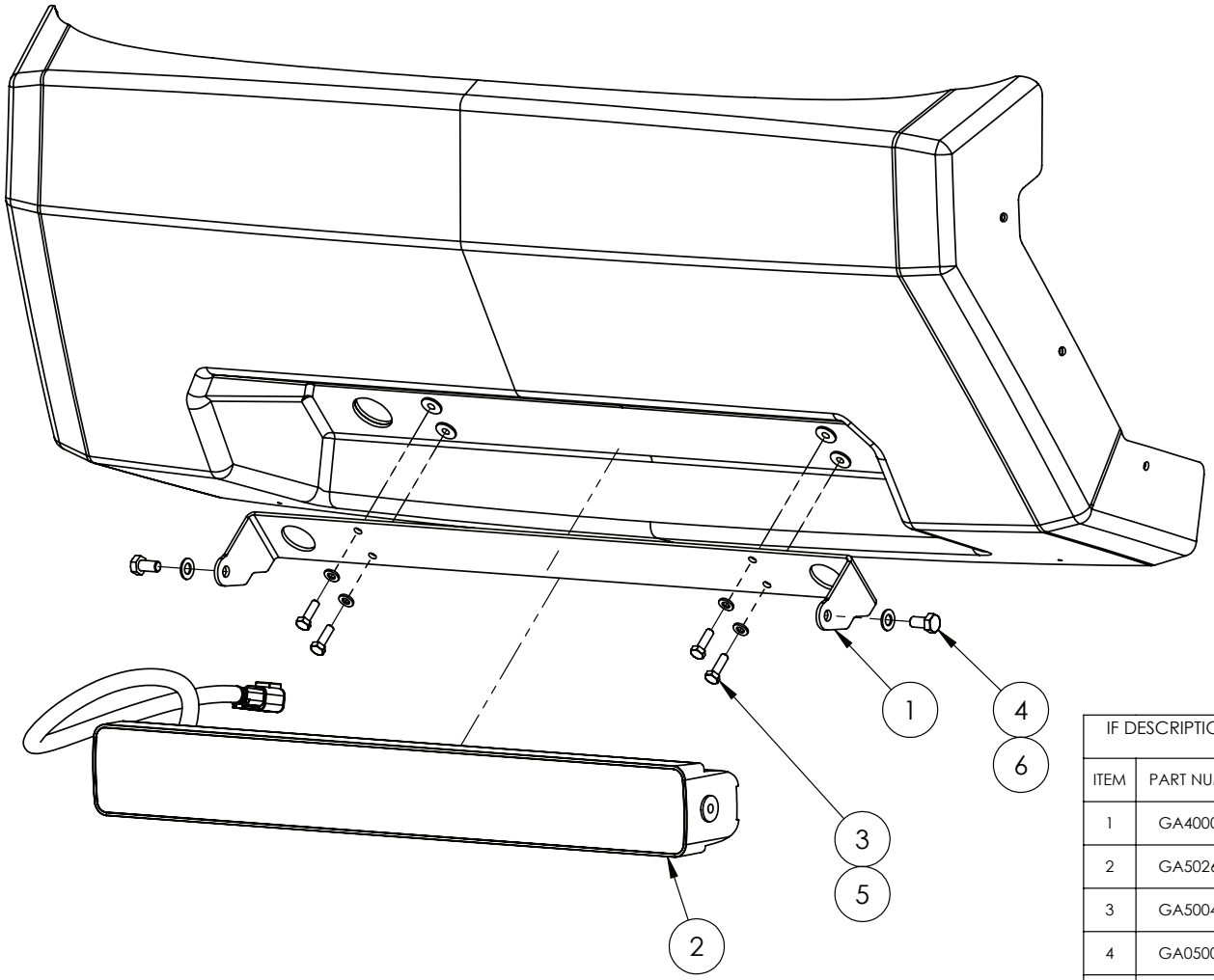

IF DESCRIPTION PREFIX IS ASSEMBLY DRAWING ONLY OR PRODUCTION DRAWING ONLY THE ITEM IS NOT FOR SALE			
ITEM	PART NUMBER	DESCRIPTION	QTY
1	GA4000303	BONNET, TR3, MY25, LIGHT BAR BRACKET	1
2	GA5026071	LIGHT BAR, DOUBLE ROW, 21.5 IN, HELLA BLACK MAGIC	1
3	GA5004063	SET SCREW M6 X 20 SS A2-70	4
4	GA0500189	SET SCREW M8 X 16 SS A2-70	2
5	GA5004437	WASHER M6 FLAT SS HD	4
6	GA5003651	WASHER M8 FLAT SS	2
GA7800353 GOLDACRES		ASSEMBLY DRAWING ONLY, BONNET, TR3, MY25, LIGHT BAR	REV 00.C

17 - Engine & Transmission

Sump Drain Plug, Engine

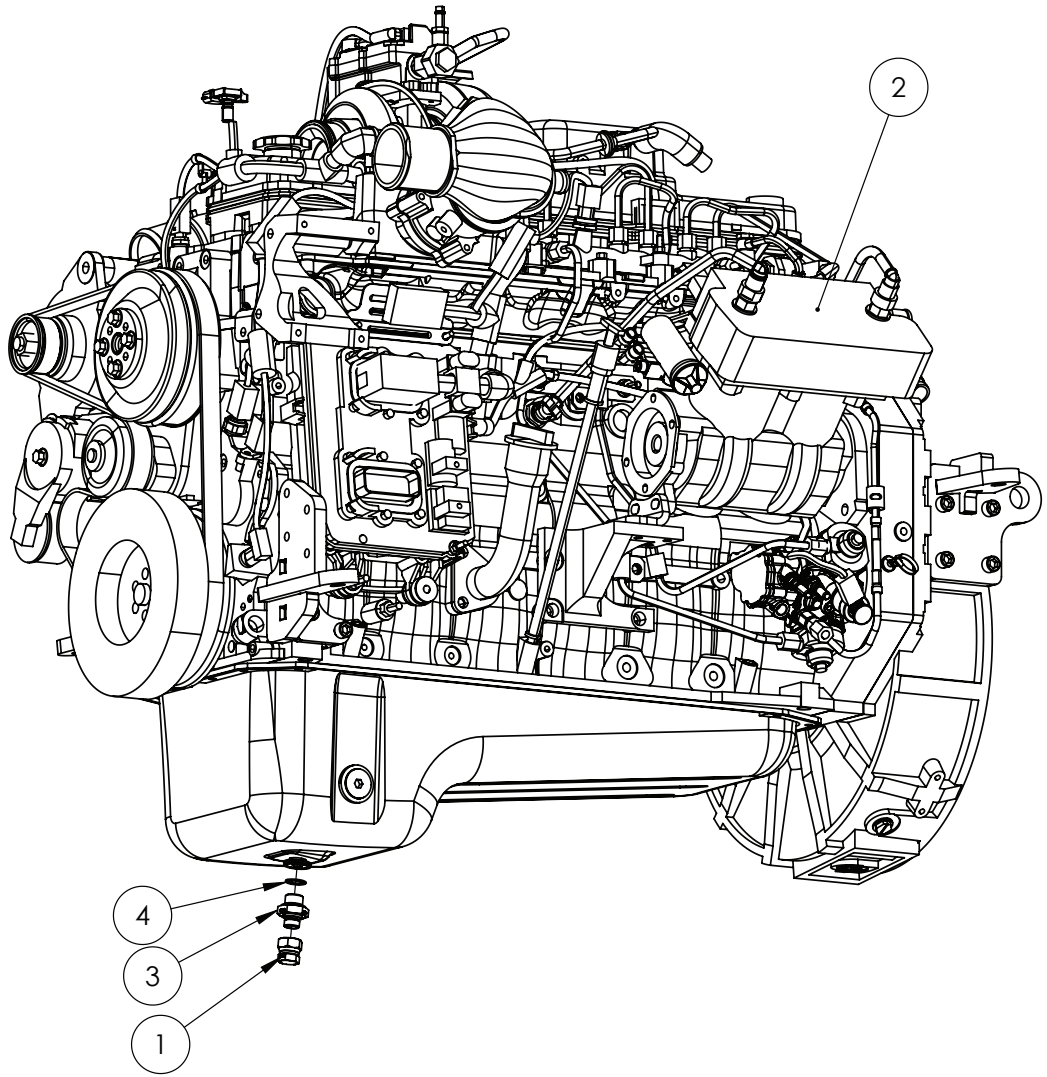

IF DESCRIPTION PREFIX IS ASSEMBLY DRAWING ONLY OR PRODUCTION DRAWING ONLY THE ITEM IS NOT FOR SALE			
ITEM	PART NUMBER	DESCRIPTION	QTY
1	GA3500278	CAP, SWIVEL, 1/2" BSPP FEMALE, S59-08	1
2	GA2700184	ENGINE, CUMMINS, B6.7, 300HP, LARGE FRAME SP, S3 MY25	1
3	GA3500484	HYDRAULIC ADAPTOR NIPPLE, M18 X 1/2" BSPP, M75L-1808	1
4	GA5070725	WASHER COPPER 18.mm ID X 1.4 THICK	1
GA6101970-01 GOLDACRES		ENGINE & TRANSMISSION ASSEMBLY, LF SP S3, MY25	REV 00

Thermostat Housing Elbow & Hosing, Engine

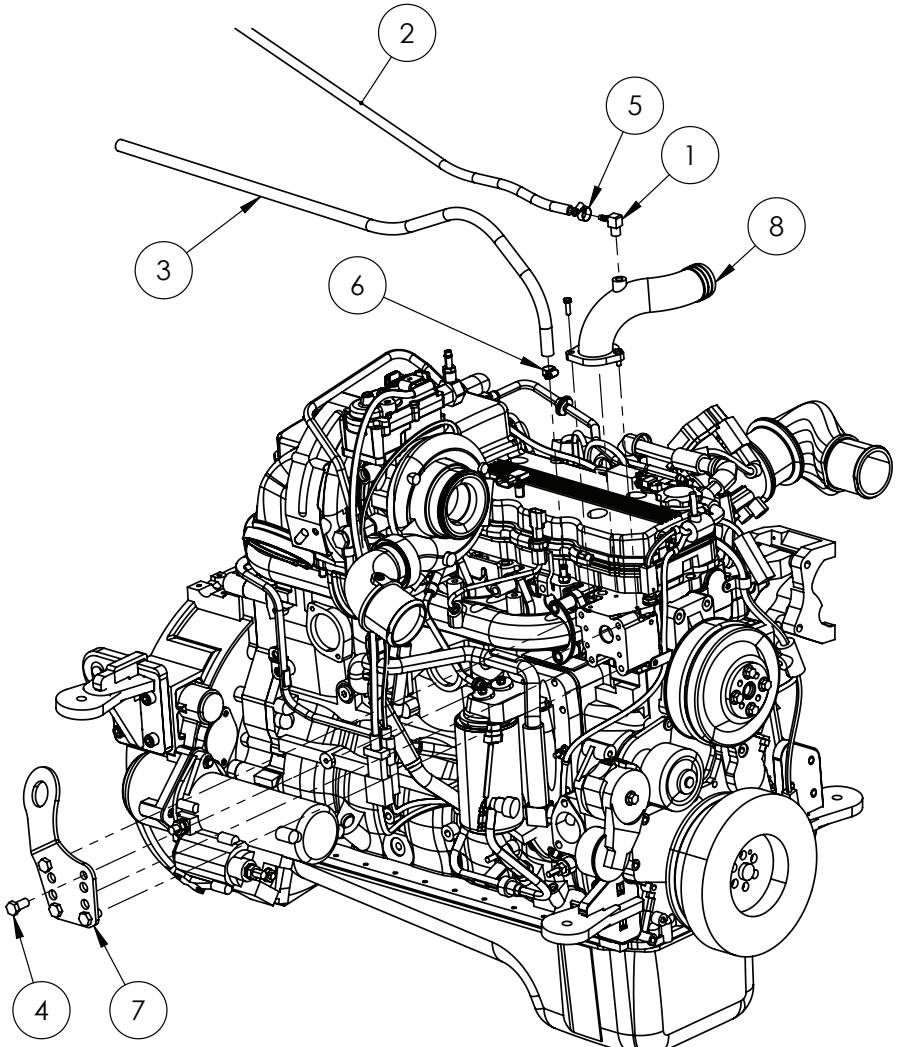

IF DESCRIPTION PREFIX IS ASSEMBLY DRAWING ONLY OR PRODUCTION DRAWING ONLY THE ITEM IS NOT FOR SALE			
ITEM	PART NUMBER	DESCRIPTION	QTY
1	GA5048340	1/4" BRASS ELBOW	1
2	GA5069255	1/4" HOSE CUT 1000mm, GA5069255	1
3	GA5010211	3/8" HOSE CUT 1000mm, GA5010211	1
4	GA5011229	BOLT M12 X 25 GR8.8 ZP	4
5	GA5004865	HOSE CLAMP 8-16mm	1
6	GA5004861	HOSE CLAMP 1/4, SS (8-12/7.5W3P)	1
7	GA4000184	PLATE, ENGINE LIFT POINT, B6.7, LARGE FRAME SP S3, MY25	1
8	GA4657280	THEROMOSTAT HOUSING ELBOW	1
GA6101970-02 GOLDACRES		ENGINE & TRANSMISSION ASSEMBLY, LF SP S3, MY25	REV 00

Water Jacket Assembly & Air Cleaner Mounting Bracket, Engine

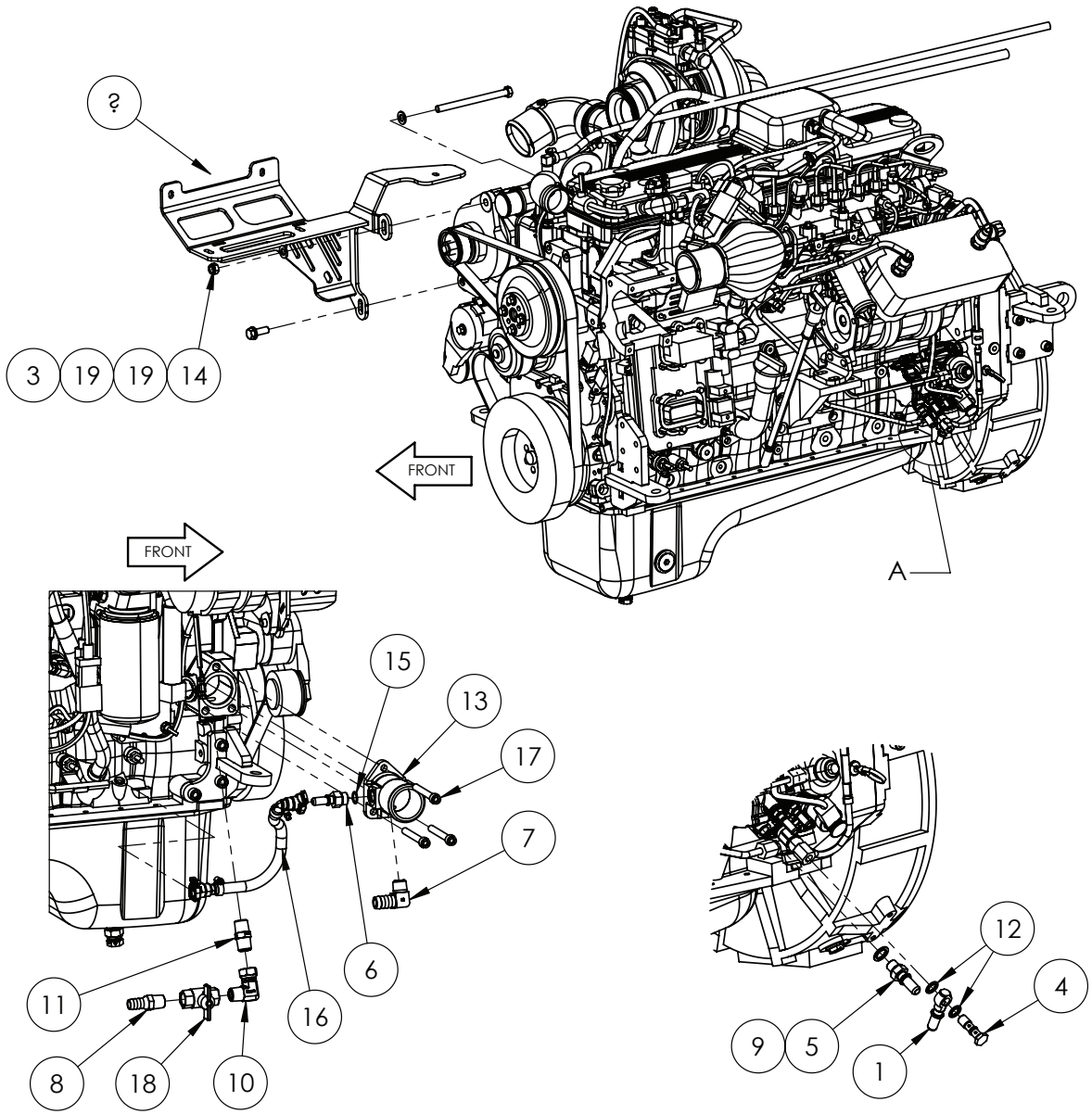

IF DESCRIPTION PREFIX IS ASSEMBLY DRAWING ONLY OR PRODUCTION DRAWING ONLY THE ITEM IS NOT FOR SALE			
ITEM	PART NUMBER	DESCRIPTION	QTY
1	GA5026077	ADAPTOR, 12mm BANJO X 1/2 SAE J2044 QUICK CONNECT MALE	1
2	GA4605036	AIR CLEANER BRACKET, B6.7 ALTERNATOR MOUNTED, LARGE FRAME SP S3, MY25	1
3	GA5000277	BOLT M12 X 160 GR8.8 ZP	1
4	GA5078842	BOLT, BANJO, M12 X 1.25, STAINLESS STEEL, DOUBLE	1
5	GA5078829	BRASS FITTING, PUSH-TO-CONNECT, STRAIGHT, 1/2 MALE SAE J2044 TO M14 MALE	1
6	GA4553278	BRASS FITTING,PUSH-TO-CONNECT, STRAIGHT, 1/2 MALE SAE J2044 TO 3/4"-16 UN, MALE	1
7	GA5078896	HOSE BARB, ELBOW 90, BRASS, 1/2" MALE BSPT - 3/4" BARB	1
8	GA5050480	HOSE BARB, 1/2" BSP MALE X 5/8" HOSE, BRASS	1
9	GA3500130	HYDRAULIC ADAPTOR, SEAL, METAL BONDED, SUIT M14 MALE THREAD, MBD-14, RYCO	1
10	GA3500333	HYDRAULIC ADAPTER, ELBOW, 90 DEGREE, 1/2" MALE X 1/2" FEMALE SWIVEL	1
11	GA3500223	HYDRAULIC ADAPTOR, NIPPLE, 1/2" BSPT MALE X 1/2" BSPT MALE	1
12	GA3500725	HYDRAULIC ADAPTOR, SEAL, METAL BONDED, M12, MBD-12	2
13	GA4553265	MACHINED, 2" WATER JACKET INLET FITTING, B6.7 CUMMINS	1
14	GA5012461	NUT M12 NYLOC ZP	1
15	GA5078123	O-RING UNO 3/4", ROD-UN12	1
16	GA5026501	QUICK CONNECT HOSE, COOLANT INLET, LF SP S3	1
17	GA0500198	SHCS M10 X 80 GR 12.9 ZP	3
18	GA5018307	VALVE, BALL, 12mm, 1/2" FEMALE, BUTTERFLY HANDLE, BRASS	1
19	GA5000577	WASHER M12 FLAT SS HD	2
GA6101970-03 GOLDACRES		ENGINE & TRANSMISSION ASSEMBLY, LF SP S3, MY25	REV 00

Heater Supply Valve & Compressor Outlet, Engine

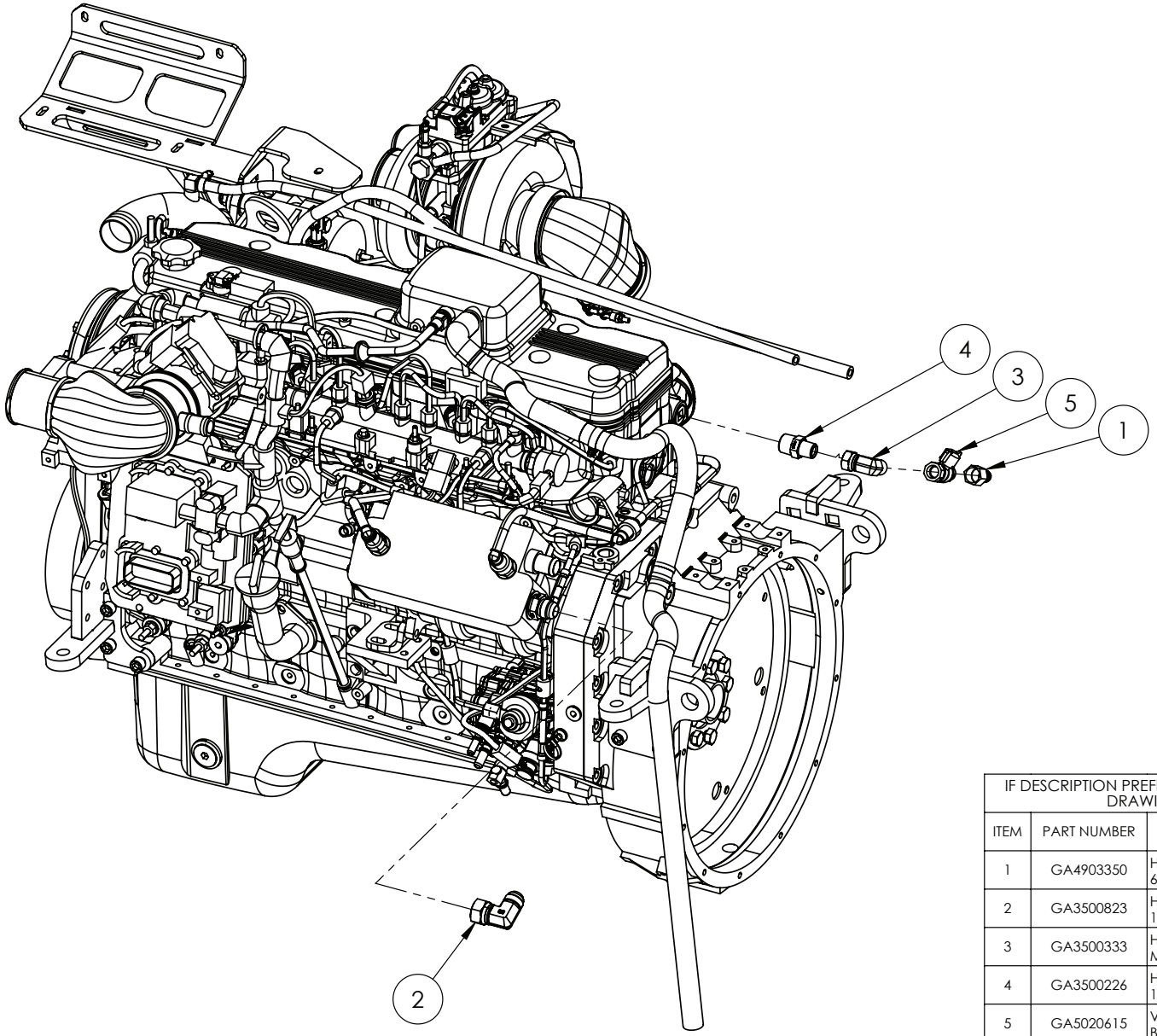

IF DESCRIPTION PREFIX IS ASSEMBLY DRAWING ONLY OR PRODUCTION DRAWING ONLY THE ITEM IS NOT FOR SALE			
ITEM	PART NUMBER	DESCRIPTION	QTY
1	GA4903350	HOSE BARB, BRASS, 1/2" BSP TO 5/8" HOSE BARB, 6mm RESTICTOR	1
2	GA3500823	HYDRAULIC ADAPTOR ELBOW, 1 1/16" JIC MALE X 1 1/16" JIC FEMALE SWIVEL, S15-1717	1
3	GA3500333	HYDRAULIC ADAPTER, ELBOW, 90 DEGREE, 1/2" MALE X 1/2" FEMALE SWIVEL	1
4	GA3500226	HYDRAULIC ADAPTOR, NIPPLE, 3/4" BSPT MALE X 1/2" BSPT MALE	1
5	GA5020615	VALVE, BALL, 12mm, 1/2" MALE, FEMALE BUTTERFLY, BRASS	1
GA6101970-04 GOLDACRES		ENGINE & TRANSMISSION ASSEMBLY, LF SP S3, MY25	REV 00

Compressor Intake & Hydraulic Pump, Engine

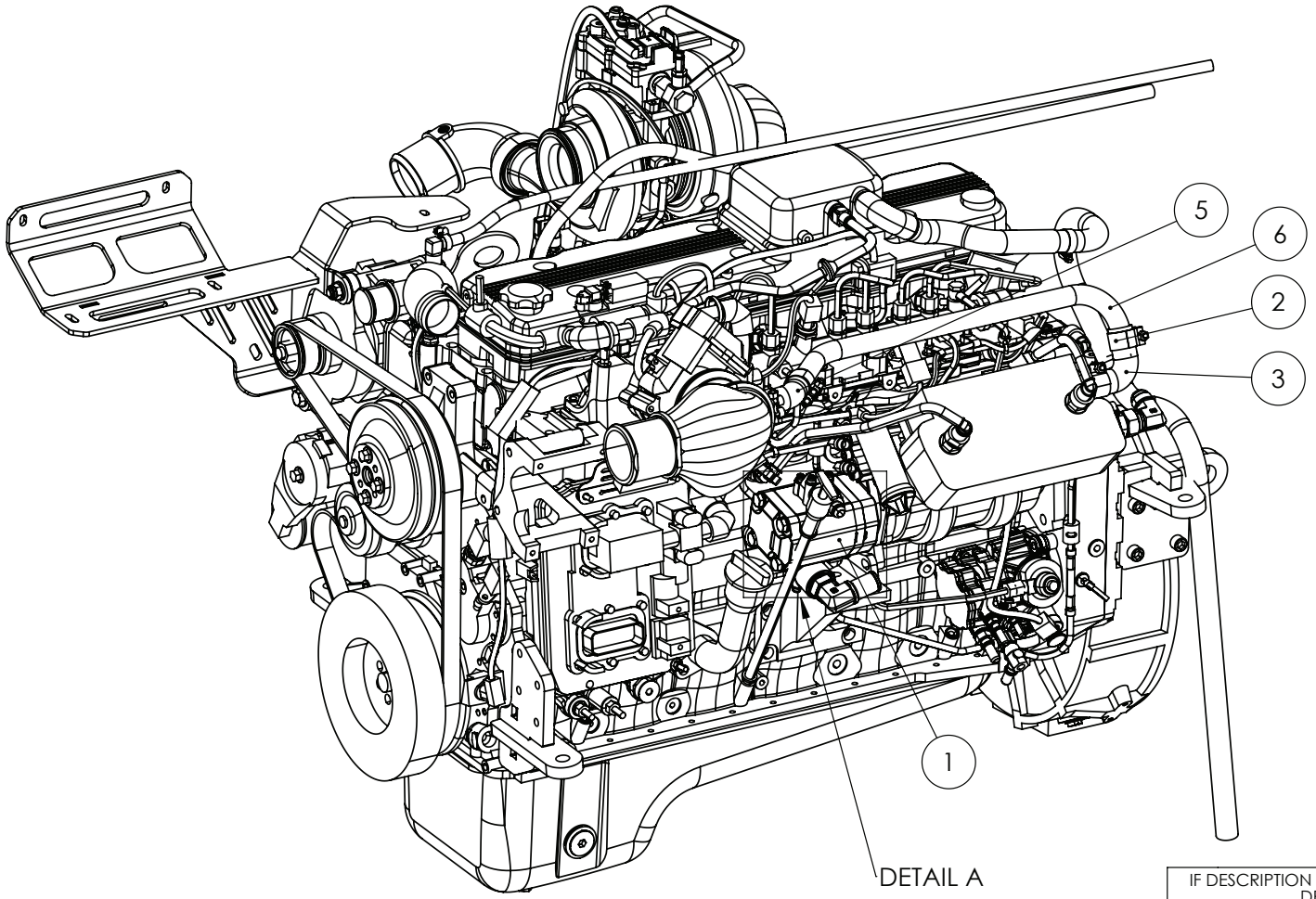

DETAIL A

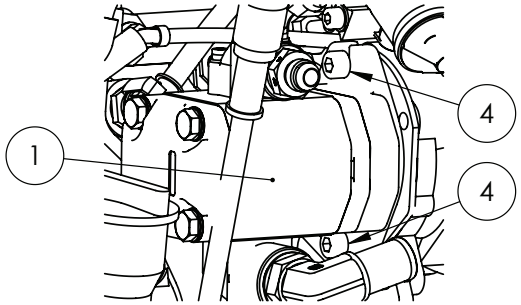

IF DESCRIPTION PREFIX IS ASSEMBLY DRAWING ONLY OR PRODUCTION DRAWING ONLY THE ITEM IS NOT FOR SALE			
ITEM	PART NUMBER	DESCRIPTION	QTY
1	GA4909537	ASSEMBLY DRAWING ONLY, PUMP, HYDRAULIC, GEAR, LF S3, MY25	1
2	GA5078433	HOSE CLAMP, 32 - 35mm, WIDE BAND T-BOLT, SS	4
3	GA5026368	HOSE, 25.4mm DIA, 90 DEG ELBOW, INOTHERM-HO241059	1
4	GA5006141	SHCS M10 X 40 GR12.9 ZP	2
5	GA5026367	SILICONE HOSE 45 DEG BEND, INOTHERM-HO241060	1
6	GA5026058	TUBE, TWIN COMPRESSOR INLET, CUMMINS B6.7, DN25, SS	1
GA6101970-05 GOLDACRES		ENGINE & TRANSMISSION ASSEMBLY, LF SP S3, MY25	REV 00

A/C Air Compressor, Engine

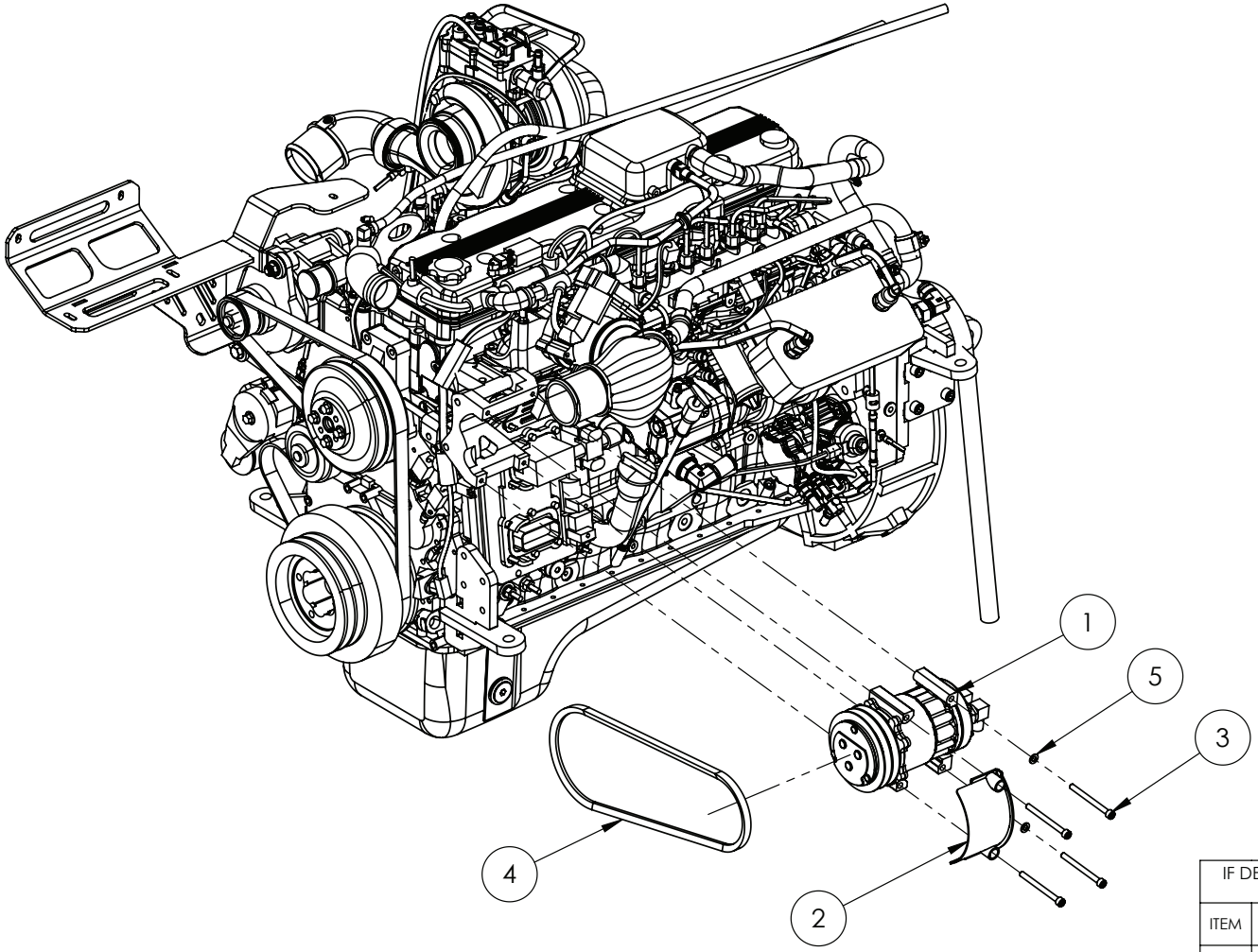

IF DESCRIPTION PREFIX IS ASSEMBLY DRAWING ONLY OR PRODUCTION DRAWING ONLY THE ITEM IS NOT FOR SALE			
ITEM	PART NUMBER	DESCRIPTION	QTY
1	GA5071640	AC COMPRESSOR SANDEN U4626	1
2	GA4605097	GUARD, AIR CONDITIONER COMPRESSOR, BELT AND PULLEY, LARGE FRAME S3	1
3	GA5049900	SHCS M8 X 90 GR12.9 ZP	4
4	GA5026234	V BELT, A SECTION X 1125mm, 13A1125	1
5	GA5003643	WASHER M8 FLAT SS HD	2
GA6101970-06 GOLDACRES		ENGINE & TRANSMISSION ASSEMBLY, LF SP S3, MY25	REV 00

Alternator & Engine Pulley Hardware, 12V - 24V Auxiliary, Engine

BILBERRY OPTION

1 FITTED IF OPTION 65211

2 FITTED IF OPTION 65212

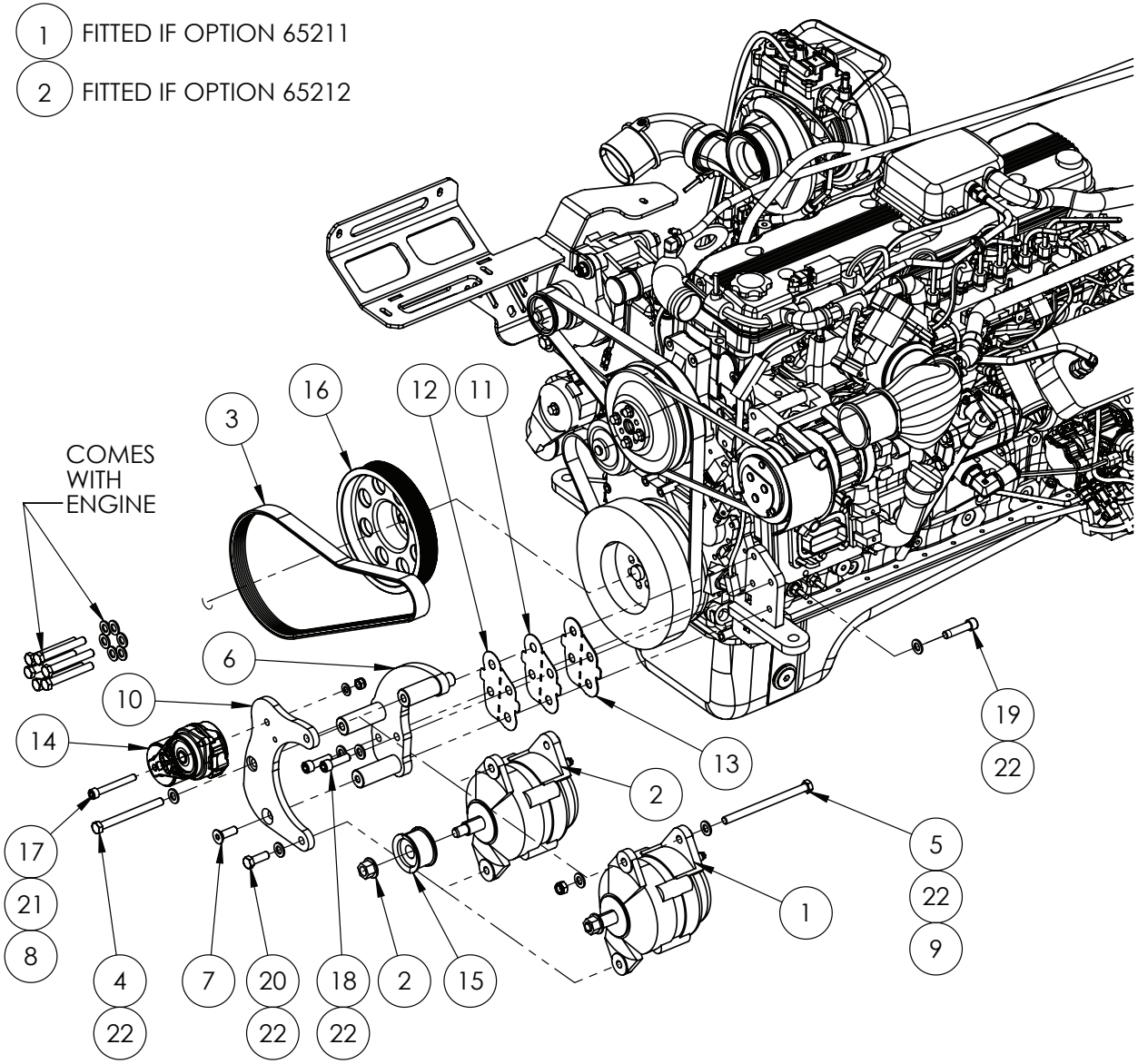

IF DESCRIPTION PREFIX IS ASSEMBLY DRAWING ONLY OR PRODUCTION DRAWING ONLY THE ITEM IS NOT FOR SALE			
ITEM	PART NUMBER	DESCRIPTION	QTY
1	GA5026242	ALTERNATOR 12V 130A J180 - DELCO REMY 24SI - 19020903	1
2	GA5078908	ALTERNATOR 24V 70A J180 - DELCO REMY 24SI - 8600017	1
3	GA2700214	BELT, MULTIRIB, 8PK 1158, PK7I , OPTIBELT	1
4	GA5011207	BOLT M12 X 130 GR8.8 ZP	1
5	GA5000281	BOLT M12 X 170 GR8.8 ZP	1
6	GA4605140	BRACKET, ALTERNATOR MOUNT, B6.7 ENGINE	1
7	GA5051290	CSCS M12 X 30 GR12.9 ZP	1
8	GA5000141	NUT M10 NYLOC ZP	1
9	GA5012461	NUT M12 NYLOC ZP	1
10	GA4000734	PLATE, ALTERNATOR BRACKET, 12-24V ALTERNATOR, B6.7 ENGINE	1
11	GA4000735	PLATE, BASE SHIM, 1mm SS 306, ALTERNATOR MOUNT, B6.7 ENGINE	1
12	GA4000737	PLATE, SHIM, 0.5mm SS 306, ALTERNATOR MOUNT, B6.7 ENGINE	1
13	GA4000736	PLATE, SHIM, 2mm SS 306, ALTERNATOR MOUNT, B6.7 ENGINE	1
14	GA2700094	PRETENSIONER, PULLEY SUIT 8PK MULTIRIB BELT	1
15	GA5078907	PULLEY, ALTERNATOR, 60mm DIAMETER 8 GROOVE, 24-1755 8PV	1
16	GA4551125	PULLEY, ENGINE, HYDRAULIC PUMP, 210mm DIAMETER 8PK MULTIRIB BELT	1
17	GA0500198	SHCS M10 X 80 GR 12.9 ZP	1
18	GA5000321	SHCS M12 X 40 GR12.9 ZP	2
19	GA5051470	SHCS M12 X 50 GR 12.9 ZP	1
20	GA5000311	SET SCREW M12 X 35 GR8.8 ZP	1
21	GA5000117	WASHER M10 FLAT SS HD	1
22	GA5000577	WASHER M12 FLAT SS HD	7
GA6101970-07 GOLDACRES		ENGINE & TRANSMISSION ASSEMBLY, LF SP S3, MY25	REV 00

Air Cleaner & Intake Assembly, Engine

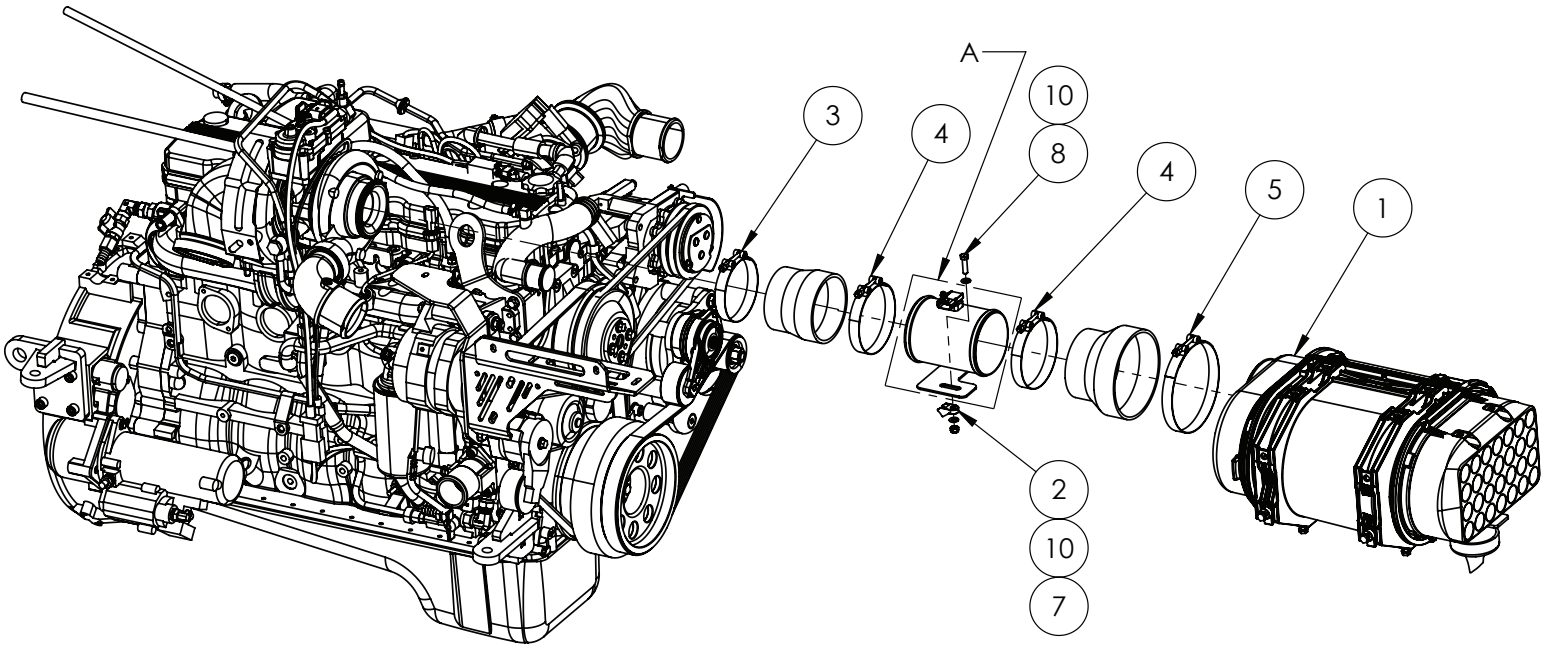

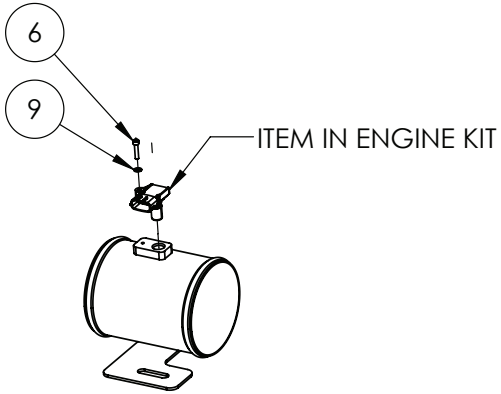

DETAIL A

IF DESCRIPTION PREFIX IS ASSEMBLY DRAWING ONLY OR PRODUCTION DRAWING ONLY THE ITEM IS NOT FOR SALE			
ITEM	PART NUMBER	DESCRIPTION	QTY
1	GA4909539	ASSEMBLY DRAWING ONLY, AIR FILTER, ENGINE, LARGE FRAME SP S3	1
2	GA5026172	HARNESS CLIP, 36mm X 19mm M8 HOLE HI-IMPACT UV BK	1
3	GA5010197	HOSE CLAMP - INTERCOOLER PIPES	1
4	GA5010199	HOSE CLAMP 4 1/2" T-BOLT	2
5	GA5066485	HOSE CLAMP 6 T BOLT SS	1
6	GA5011363	M4 SHCS	1
7	GA5004917	NUT M8 NYLOC ZP	1
8	GA5011475	SET SCREW M8 X 30 GR8.8 ZP	1
9	GA5020510	WASHER M4 FLAT SS	1
10	GA5003643	WASHER M8 FLAT SS HD	2
GA6101970-08 GOLDACRES		ENGINE & TRANSMISSION ASSEMBLY, LF SP S3, MY25	REV 00

Transmission Mounting, Engine

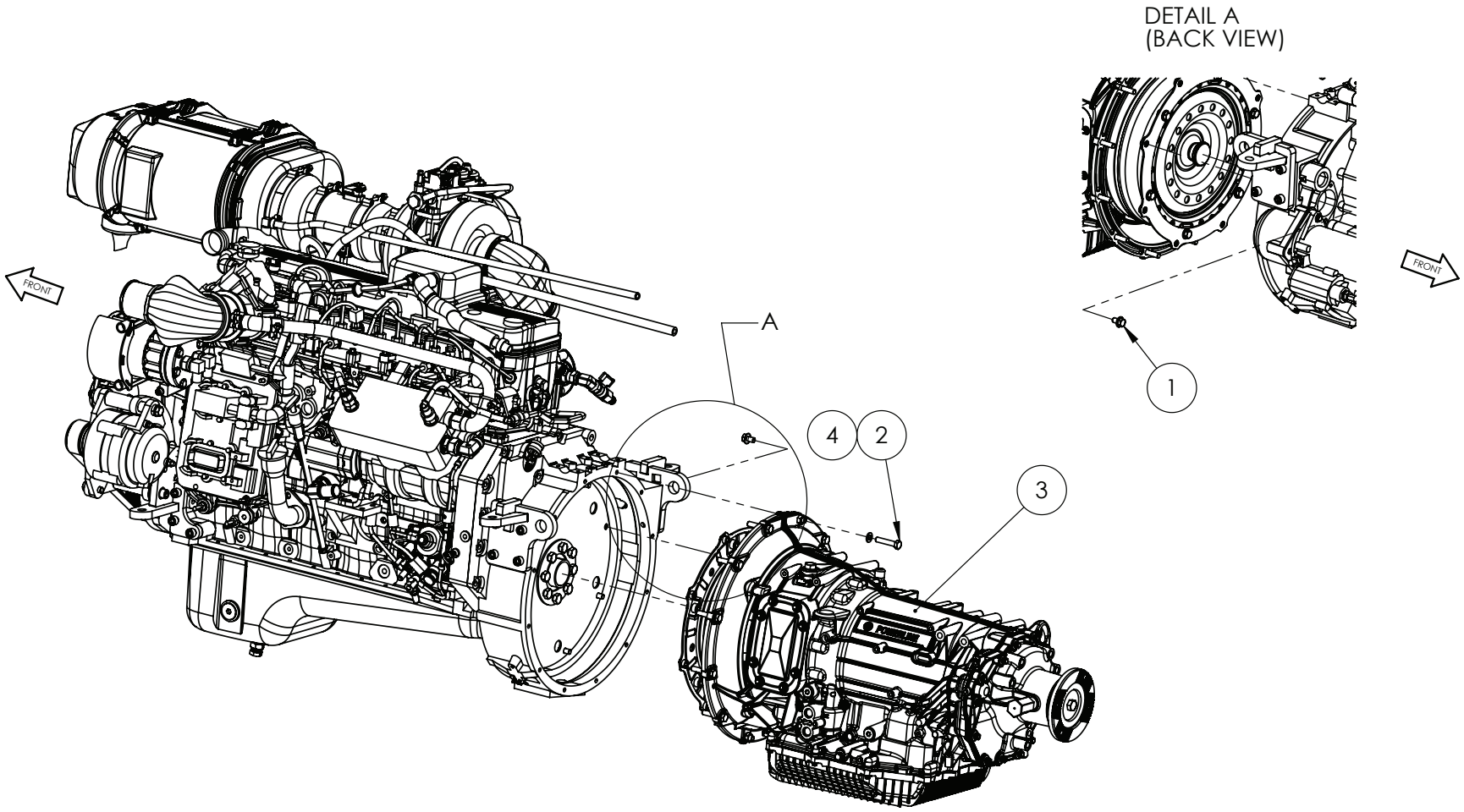

IF DESCRIPTION PREFIX IS ASSEMBLY DRAWING ONLY OR PRODUCTION DRAWING ONLY THE ITEM IS NOT FOR SALE			
ITEM	PART NUMBER	DESCRIPTION	QTY
1	GA0500191	SET SCREW M10 X 16 FLANGED GR10.9 ZP	8
2	GA5011171	SET SCREW M10 X 50 GR8.8 ZP	12
3	GA2700180	TRANSMISSION, ZF, 8AP1200, LARGE FRAME SP, S3, MY25	1
4	GA5000117	WASHER M10 FLAT SS HD	12
GA6101970-09 GOLDACRES		ENGINE & TRANSMISSION ASSEMBLY, LF SP S3, MY25	REV 00

Ride Height Valve Mounting, Engine

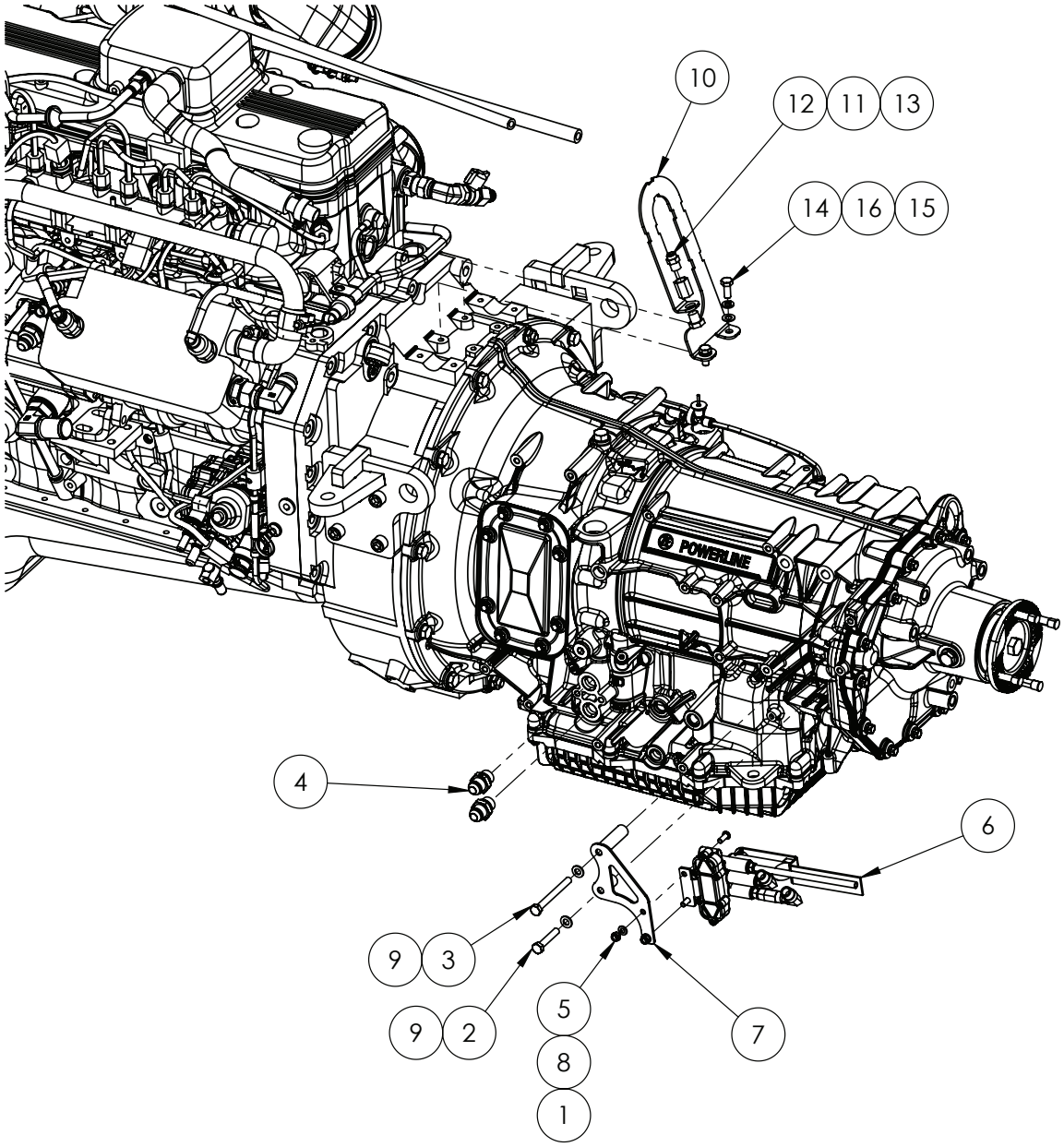

IF DESCRIPTION PREFIX IS ASSEMBLY DRAWING ONLY OR PRODUCTION DRAWING ONLY THE ITEM IS NOT FOR SALE			
ITEM	PART NUMBER	DESCRIPTION	QTY
1	GA5004050	BHCS M6 X 16 SS A2-70	2
2	GA0500033	BOLT M8 X 45 GR8.8 ZP	1
3	GA5004749	BOLT M8 X 80 GR8.8 ZP	1
4	GA3501950	HYDRAULIC ADAPTOR - 3/4 JIC MALE X 18 X 1.5MM METRIC MALE - 8M18F87OMX	2
5	GA5048115	NUT M6 NYLOC ZP	2
6	GA4949460	RIDE HEIGHT CONTROL VALVE, ASSEMBLY, REAR RIGHT, G6 MY20	1
7	GA4605075	RIDE HEIGHT CONTROLL MOUNT, FRONT, LARGE FRAME S3	1
8	GA5004437	WASHER M6 FLAT SS HD	2
9	GA5003643	WASHER M8 FLAT SS HD	2
10	GA4000872	PLATE, TRANSMISSON BREATHER HOSE GUIDE, G8S3	1
11	GA5066940	SOCKET, 1/4 FEMALE THREAD, HEX, BRASS	1
12	GA5045140	PNEUMATIC FITTING, NIPPLE, PUSH IN 6mm X 1/4" BSPT, BRASS	1
13	GA5071207	BREATHER, SILENCER, 1/4 BUTTON	1
14	GA5004085	SET SCREW M8 X 20 GR8.8 ZP	2
15	GA5003651	WASHER M8 FLAT SS	2
16	GA5004919	WASHER M8 SPRING SS	2
GA6101970-10 GOLDACRES		ENGINE & TRANSMISSION ASSEMBLY, LF SP S3, MY25	REV 00.B

Hydraulic Pump & PTO Mounting, Engine

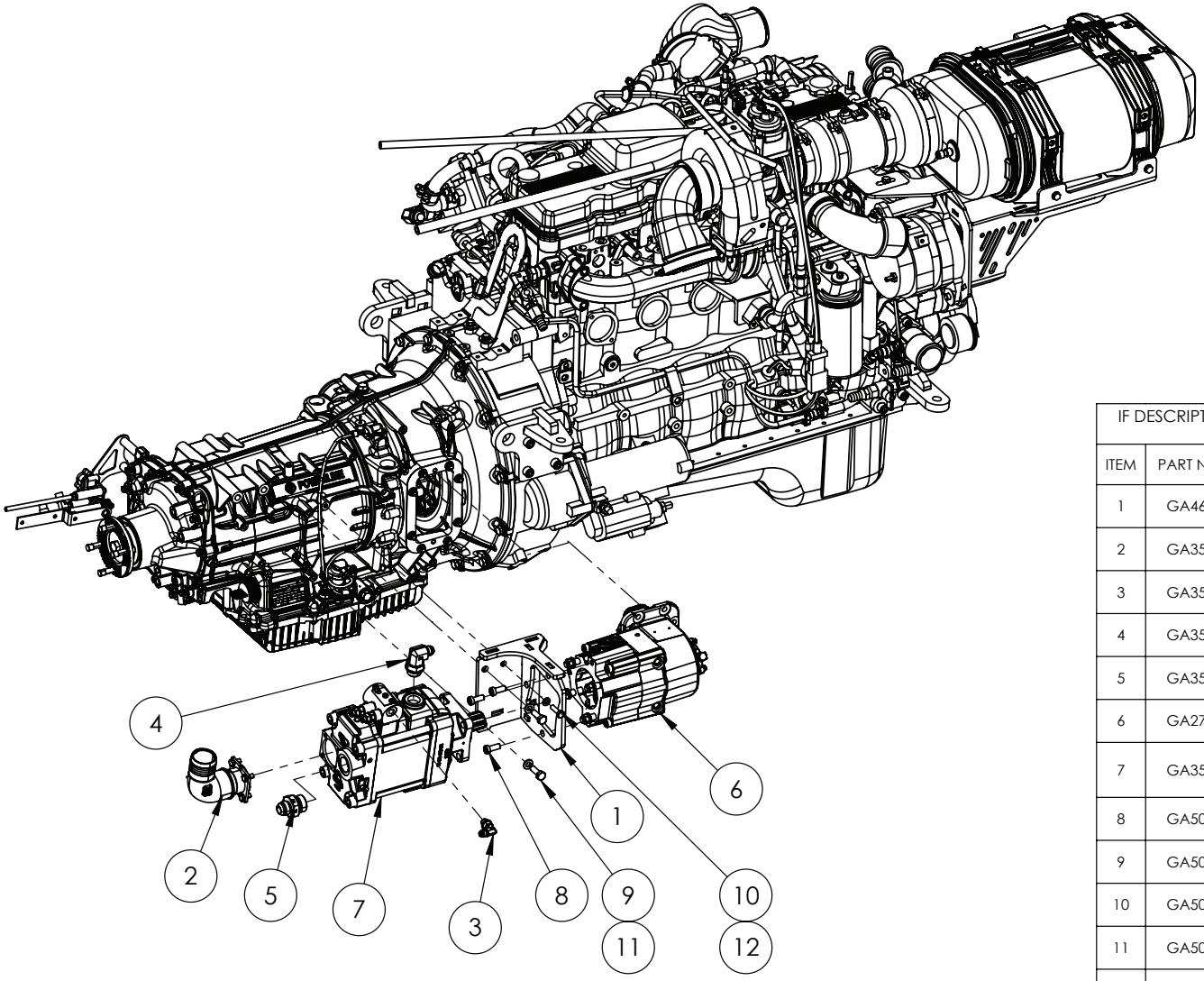

IF DESCRIPTION PREFIX IS ASSEMBLY DRAWING ONLY OR PRODUCTION DRAWING ONLY THE ITEM IS NOT FOR SALE			
ITEM	PART NUMBER	DESCRIPTION	QTY
1	GA4605164	BRACKET, PTO MOUNT, FABRICATED, ZF 8AP1200 TRANSMISSION, LF S3	1
2	GA3501211	HYDRAULIC PUMP SUCTION FITTING, 90° ELBOW, FLANGE TO 2" BARB	1
3	GA3500734	HYDRAULIC ADAPTER, ELBOW, 90 DEGREE, 9/16" JIC X 1/4" BSPP MALE O-RING , S76-0409	1
4	GA3500733	HYDRAULIC ADAPTOR, ELBOW, 90 DEGREE, 3/4" JIC MALE X 3/4" BSPP MALE O-RING, S76-1212	1
5	GA3500735	HYDRAULIC ADAPTOR, NIPPLE, 1" BSPP O-RING MALE X 1 1/16" JIC MALE, S74-1617	1
6	GA2700215	PTO, CONSTANT DRIVE, POWERLINE, P058 + MOUNTING, LUBE & BRACKET KITS	1
7	GA3501897	PUMP, HYDRAULIC PUMP, VAR. DISP., PISTON, 110CC, LOAD SENSING, V60N-110 RDYN-1-0-03/LSP-2	1
8	GA5006127	SHCS LOW HEAD M10 X 25 GR12.9 BLACK	3
9	GA5065455	SET SCREW M10 X 30 GR8.8 ZP	2
10	GA5011475	SET SCREW M8 X 30 GR8.8 ZP	1
11	GA5000117	WASHER M10 FLAT SS HD	2
12	GA5003643	WASHER M8 FLAT SS HD	1
GA6101970-11 GOLDACRES		ENGINE & TRANSMISSION ASSEMBLY, LF SP S3, MY25	REV 00.B

Turbo Header Exhaust, Engine

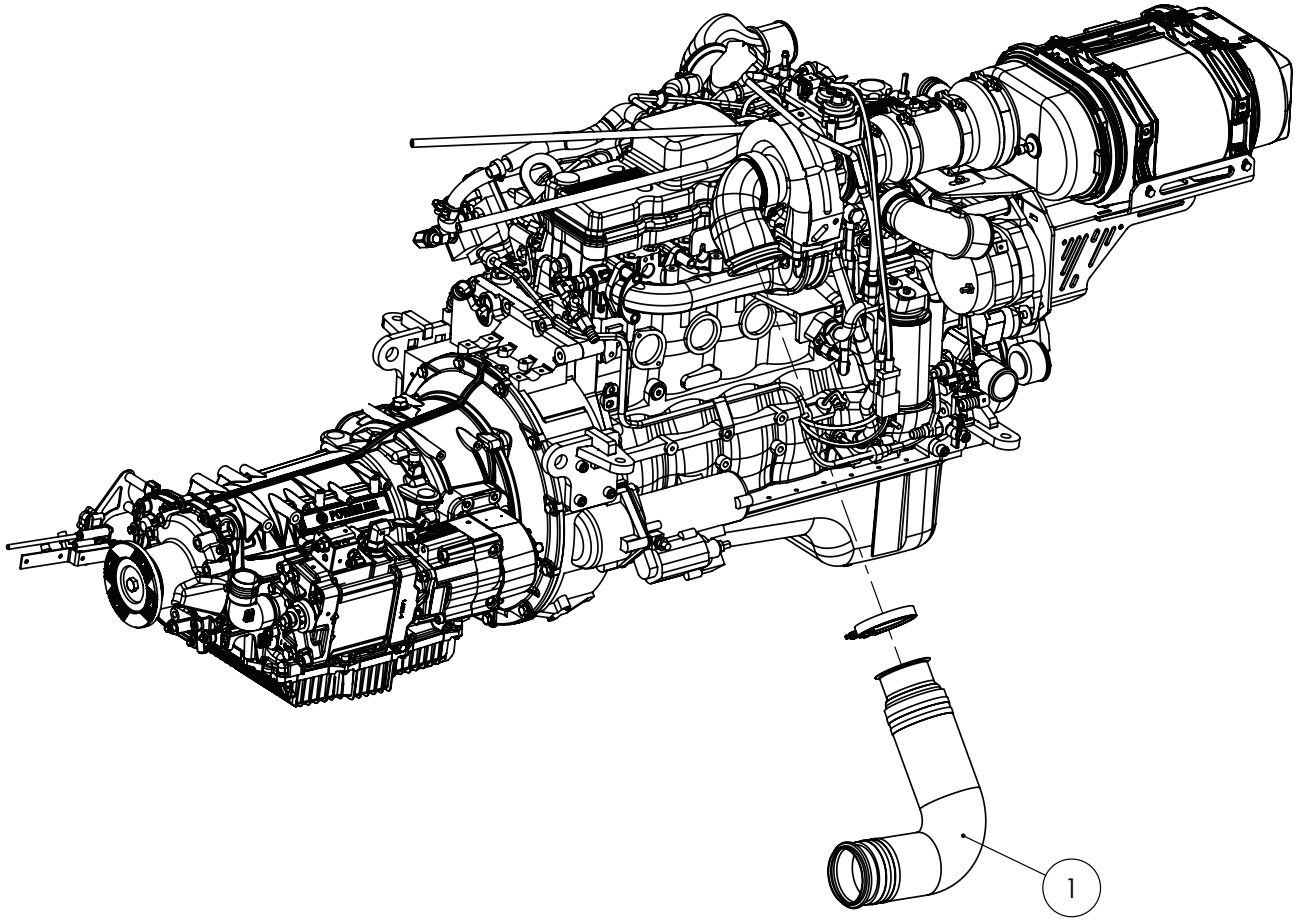

IF DESCRIPTION PREFIX IS ASSEMBLY DRAWING ONLY OR PRODUCTION DRAWING ONLY THE ITEM IS NOT FOR SALE			
ITEM	PART NUMBER	DESCRIPTION	QTY
1	GA2700203	PIPE, EXHAUST TURBO HEADER, SERIES 3	1
GA6101970-12 GOLDACRES		ENGINE & TRANSMISSION ASSEMBLY, LF SP S3, MY25	REV 00

Exhaust Pipe Mounting

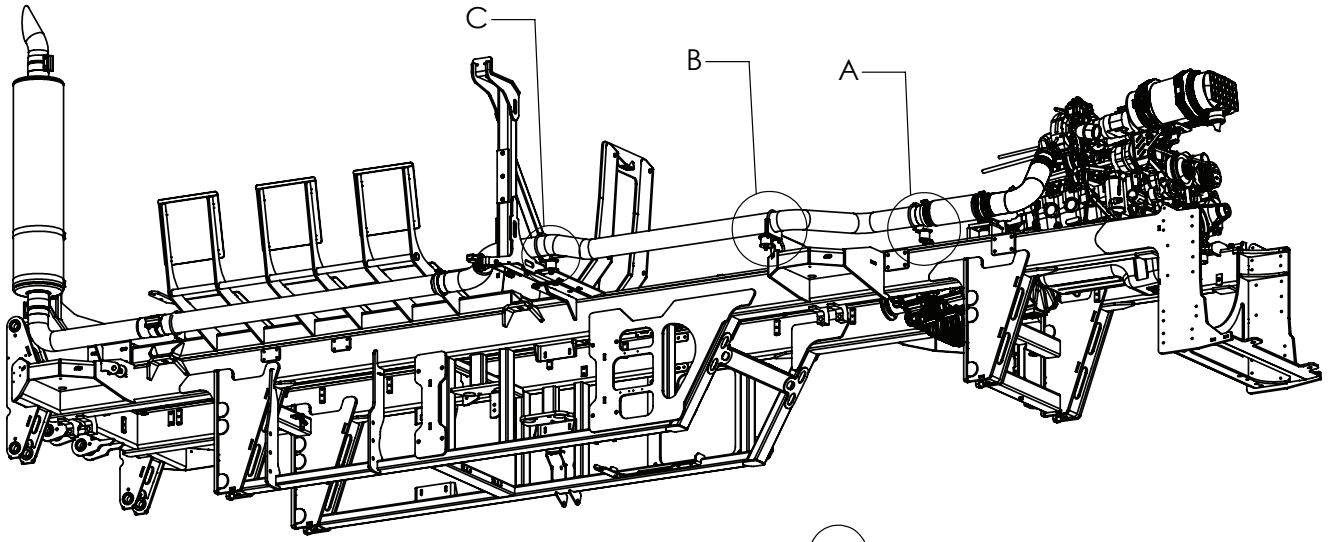

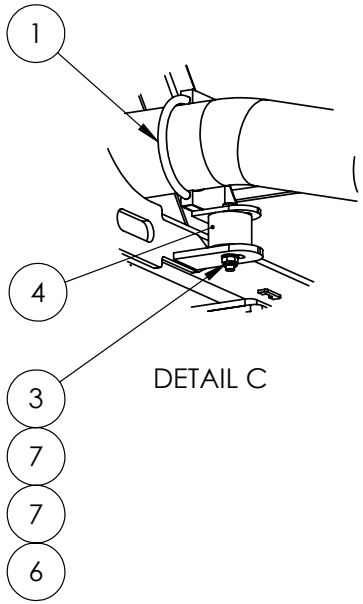

DETAIL C

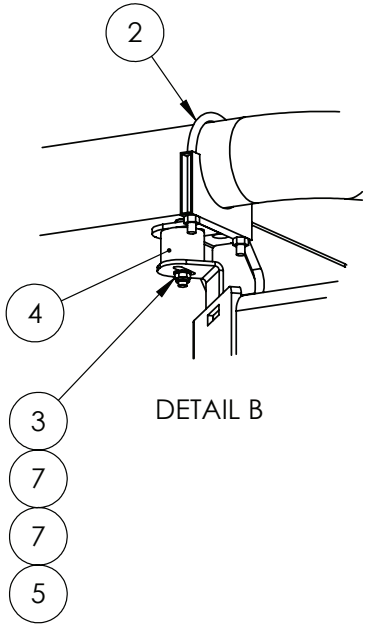

DETAIL B

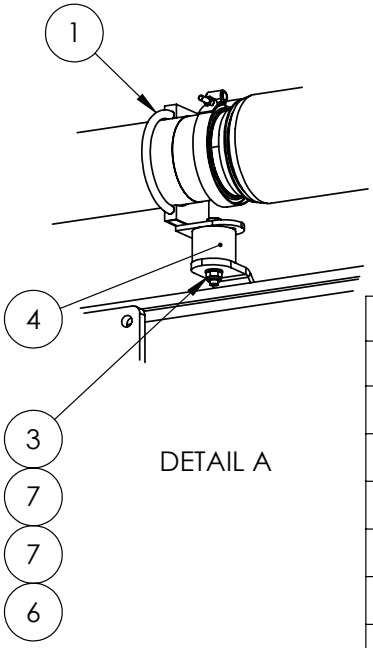

DETAIL A

IF DESCRIPTION PREFIX IS ASSEMBLY DRAWING ONLY OR PRODUCTION DRAWING ONLY THE ITEM IS NOT FOR SALE			
ITEM	PART NUMBER	DESCRIPTION	QTY
1	GA4658836	EXHAUST CLAMP/BUFFER BRACKET-SINGLE SP2011	2
2	GA4658835	EXHAUST CLAMP/BUFFER BRACKET-SINGLE SP2011	1
3	GA5000141	NUT M10 NYLOC ZP	5
4	GA5014609	RUBBER BUFFER, 50mm DIA X 40mm LONG, M10 X 25 MALE X M10 FEMALE	3
5	GA5006143	SET SCREW M10 X 16 GR8.8 ZP	1
6	GA5006113	SET SCREW M10 X 20 GR8.8 ZP	2
7	GA5000117	WASHER M10 FLAT SS HD	10
GA7800272 GOLDACRES		ASSEMBLY DRAWING ONLY, EXHAUST SYSTEM, G8 S3	REV 00.A

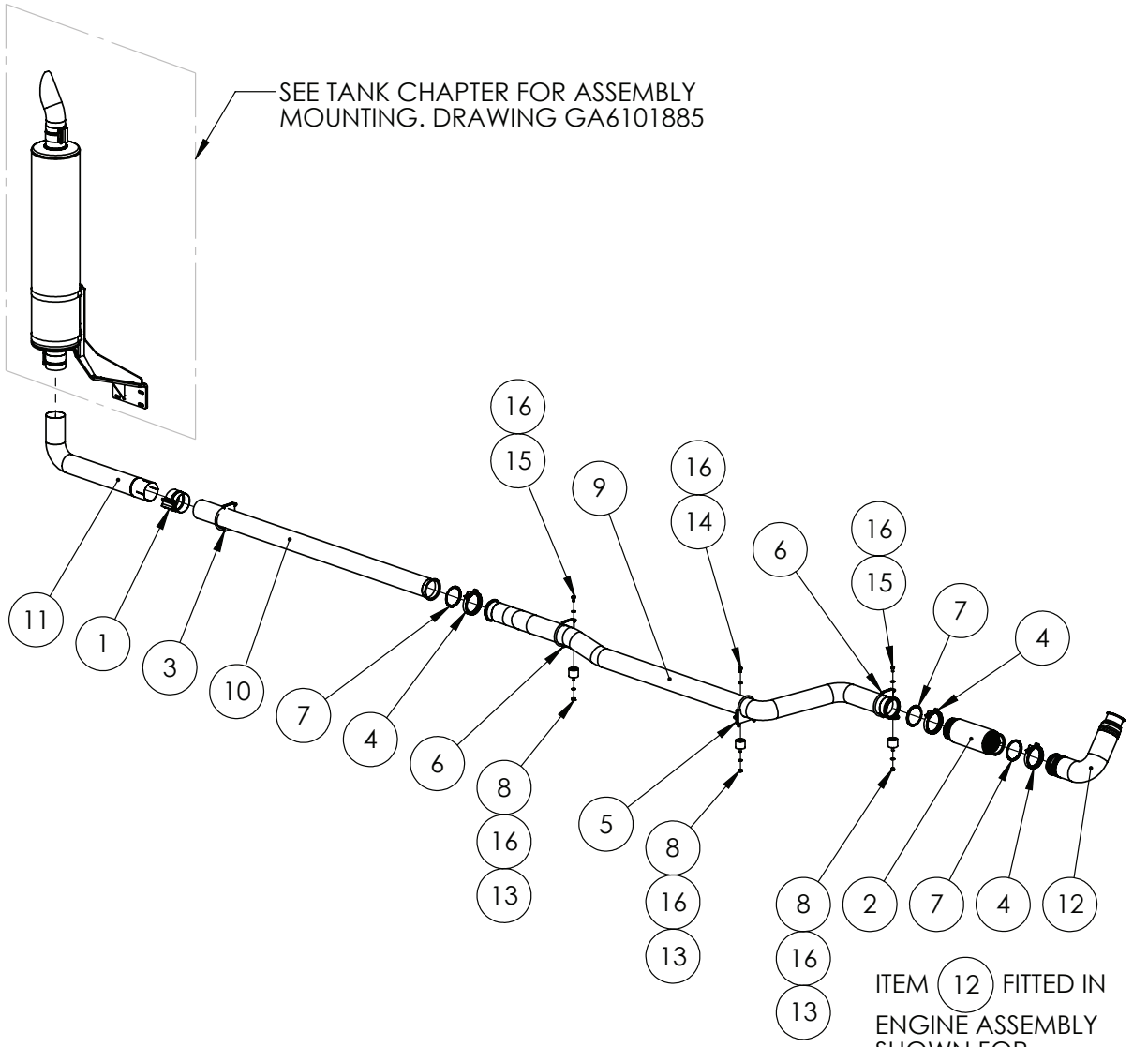

IF DESCRIPTION PREFIX IS ASSEMBLY DRAWING ONLY OR PRODUCTION DRAWING ONLY THE ITEM IS NOT FOR SALE			
ITEM	PART NUMBER	DESCRIPTION	QTY
1	GA2700015	4" TORCTITE EXHAUST CLAMP	1
2	GA2700113	EXHAUST BELLOWS, FLEX, 4", MARMON V BAND CLAMP	1
3	GA5066215	EXHAUST CLAMP 4 1/8"	1
4	GA2700178	EXHAUST CLAMP, 4", V BAND	3
5	GA4658835	EXHAUST CLAMP/BUFFER BRACKET-SINGLE SP2011	1
6	GA4658836	EXHAUST CLAMP/BUFFER BRACKET-SINGLE SP2011	2
7	GA2700179	GASKET, EXHAUST CLAMP, V BAND	3
8	GA5000141	NUT M10 NYLOC ZP	3
9	GA2700204	PIPE, EXHAUST FRONT, CABIN, SERIES 3	1
10	GA2700205	PIPE, EXHAUST MID, SERIES 3	1
11	GA2700207	PIPE, EXHAUST REAR, G8 SERIES 3	1
12	GA2700203	PIPE, EXHAUST TURBO HEADER, SERIES 3	1
13	GA5014609	RUBBER BUFFER, 50mm DIA X 40mm LONG, M10 X 25 MALE X M10 FEMALE	3
14	GA5006143	SET SCREW M10 X 16 GR8.8 ZP	1
15	GA5006113	SET SCREW M10 X 20 GR8.8 ZP	2
16	GA5000117	WASHER M10 FLAT SS HD	6
GA7800272 GOLDACRES		ASSEMBLY DRAWING ONLY, EXHAUST SYSTEM, G8 S3	REV 00.A

Combination Cooler, Assembly

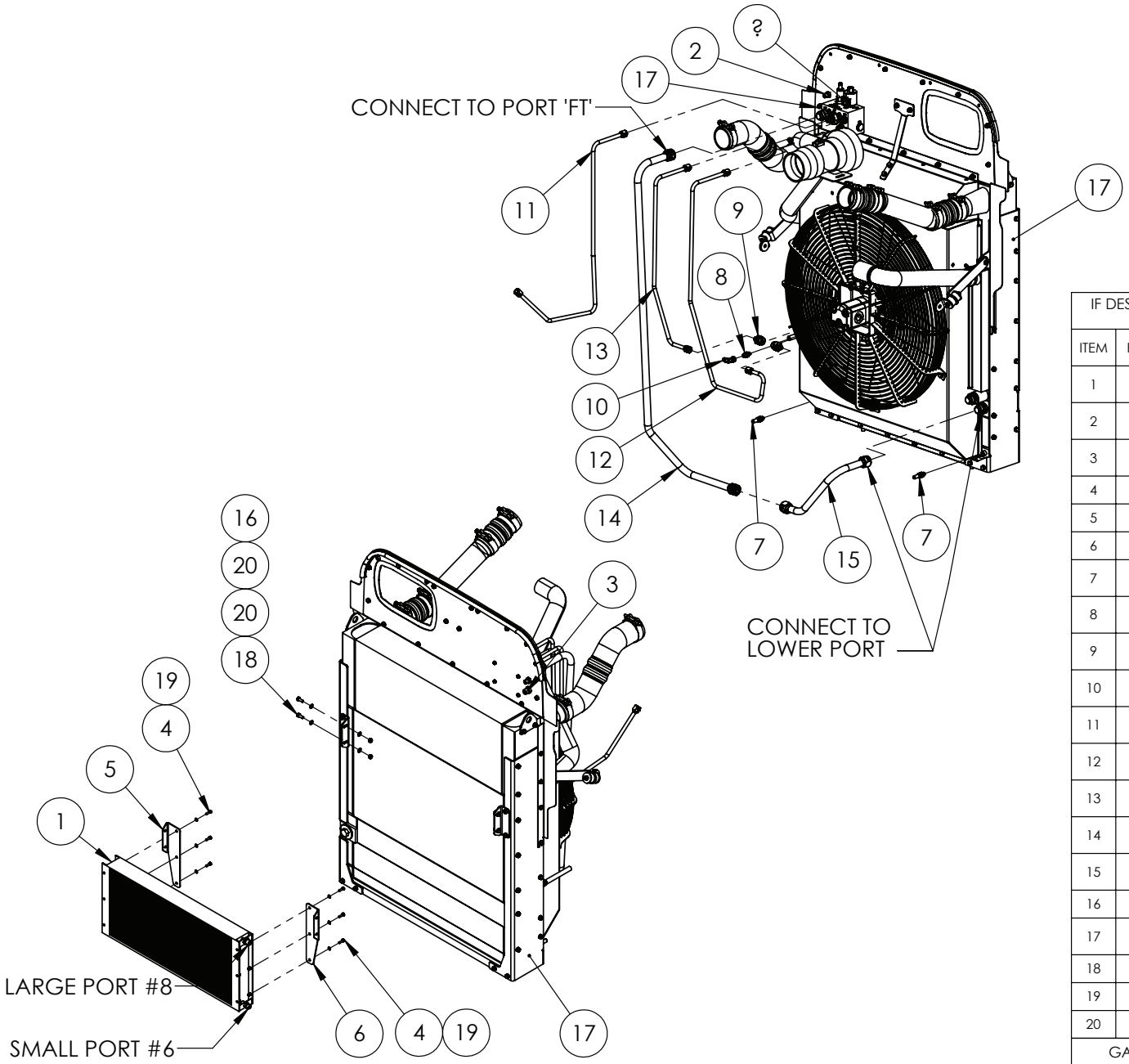

IF DESCRIPTION PREFIX IS ASSEMBLY DRAWING ONLY OR PRODUCTION DRAWING ONLY THE ITEM IS NOT FOR SALE			
ITEM	PART NUMBER	DESCRIPTION	QTY
1	GA5007361	A/C CONDENSER, TUBE & FIN, 6 ROW, #6 & #8 FITTINGS	1
2	GA3501867	AIR CONDITIONER ADAPTOR, BULKHEAD NIPPLE, # 6	1
3	GA3501868	AIR CONDITIONER ADAPTOR, BULKHEAD NIPPLE, # 8	1
4	GA5004065	BOLT M6 X 20 GR8.8 ZP	6
5	GA4507065	BRACKET AC CONDENSER LH, SUIT G SERIES	1
6	GA4507070	BRACKET AC CONDENSER RH, SUIT G SERIES	1
7	GA4562340	BRASS FITTING, PUSH-TO-CONNECT, STRAIGHT, 1/2 MALE SAE J2044 TO 1/4 BSPT	2
8	GA3500544	HYDRAULIC ADAPTOR NIPPLE, 1/4" BSP O-RING X 9/16" JIC, S74-0409	1
9	GA3501920	HYDRAULIC ADAPTOR, NIPPLE, 3/4" JIC MALE X 1-1/16" UN MALE O-RING, S90-1217	2
10	GA3500002	HYDRAULIC COUPLING, ELBOW, 90 DEGREE, 9/16" MALE JIC, 9/16" FEMALE SWIVEL JIC	1
11	GA3501896	HYDRAULIC PIPE ASSEMBLY, FAN DRIVE MANIFOLD, PUMP TO MANIFOLD, LF SP S3	1
12	GA3501894	HYDRAULIC PIPE, ENGINE FAN MOTOR, PRESSURE, LF SP S3	1
13	GA3501895	HYDRAULIC PIPE, ENGINE FAN MOTOR, TANK, LF SP S3	1
14	GA3501784	HYDRAULIC PIPE, FAN DRIVE MANIFOLD TANK TO COOLER, LF SP S3	1
15	GA3501783	HYDRAULIC PIPE, HYDRAULIC OIL COOLER INLET, LF SP S3	1
16	GA5004917	NUT M8 NYLOC ZP	4
17	GA2700195	RADIATOR, COMBINATIONAL SUIT B6.7 300HP, LARGE FRAME SP S3, INNOTHERM	1
18	GA5004085	SET SCREW M8 X 20 GR8.8 ZP	4
19	GA5004437	WASHER 6mm FLAT SS	6
20	GA5003643	WASHER M8 FLAT SS HD	8
GA4909495 GOLDACRES		PRODUCTION DRAWING ONLY, COOLER ASSEMBLY, S3	REV 00

Combination Cooler, Hoses

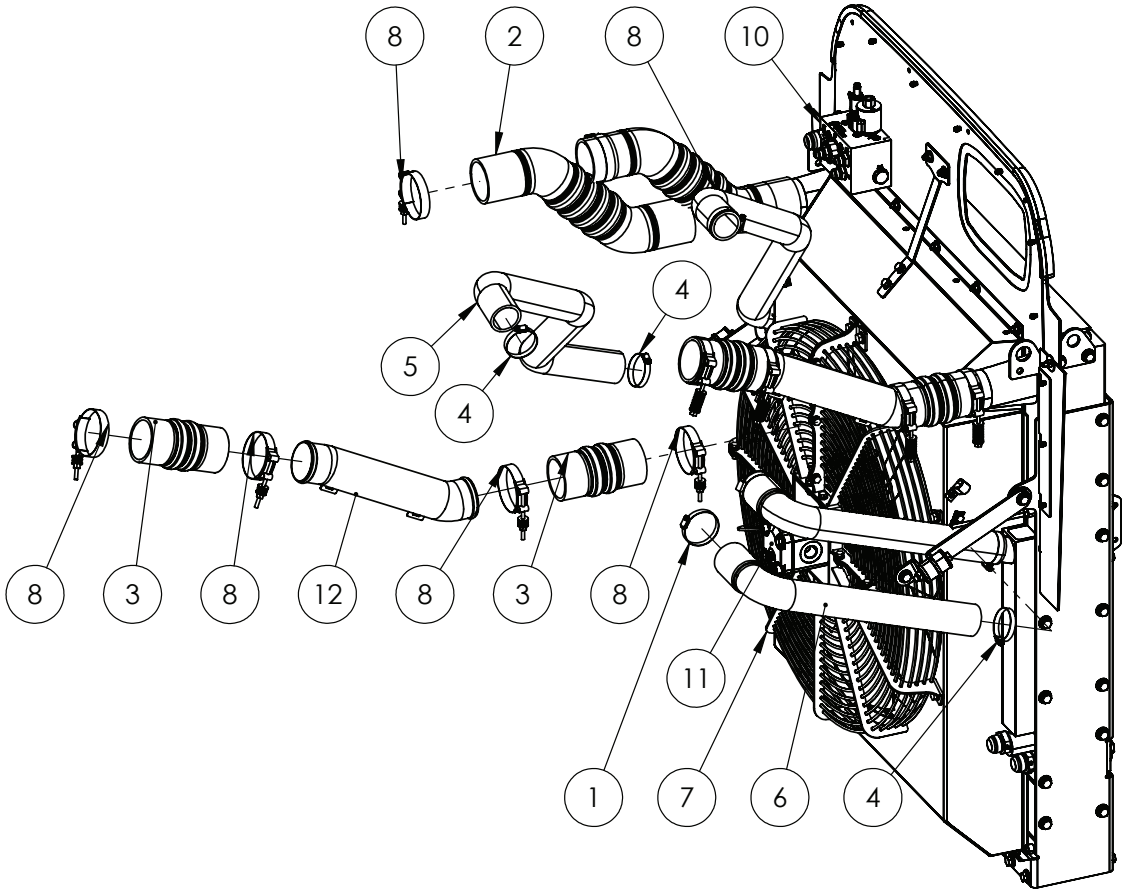

IF DESCRIPTION PREFIX IS ASSEMBLY DRAWING ONLY OR PRODUCTION DRAWING ONLY THE ITEM IS NOT FOR SALE			
ITEM	PART NUMBER	DESCRIPTION	QTY
1	GA5016815	50-70mm SS HOSE CLAMP	1
2	GA2700218	COMBINATION COOLER, HOSE, CAC, DIA 76XMM, CHARGE AIR, HO240215, LARGE FRAME S3	1
3	GA5078958	COMBINATION COOLER, HOSE, HUMP, 3 RING, DIA 76X150MM, HO-130408-01	2
4	GA5078951	COMBINATION COOLER, CLAMP, WORM, STAINLESS STEEL, DIA 46-70mm, 46-70-SS-NA-CLWO, G4 S2	3
5	GA2700216	COMBINATION COOLER, HOSE, RADIATOR, INLET, HO250845, LARGE FRAME S3	1
6	GA2700217	COMBINATION COOLER, HOSE, RADIATOR, OUTLET, HO240213, LARGE FRAME S3	1
7	GA4909662	GUARD, FAN, FULL ASSEMBLY, INNOTHERM GU240441	1
8	GA5026500	HOSE CLAMP, CONSTANT TENSION, 82-90mm	6
9	GA5026690	MAIN ASSEMBLY, COMBINATION COOLER, LF SP S3	1
10	GA3501924	MANIFOLD, HYDRAULIC FAN, INNOTHERM - PA240612	1
11	GA3501925	MOTOR, HYDRAULIC 23CC, INNOTHERM - HM241340	1
12	GA5026371	PIPE, 76OD, CAC, INOTHERM - PI241297	1
GA2700195 GOLDACRES		RADIATOR, COMBINATIONAL SUIT B6.7 300HP, LF SP S3	REV

18 - Driveline

Front Axle to Chassis Mounting, 4WD

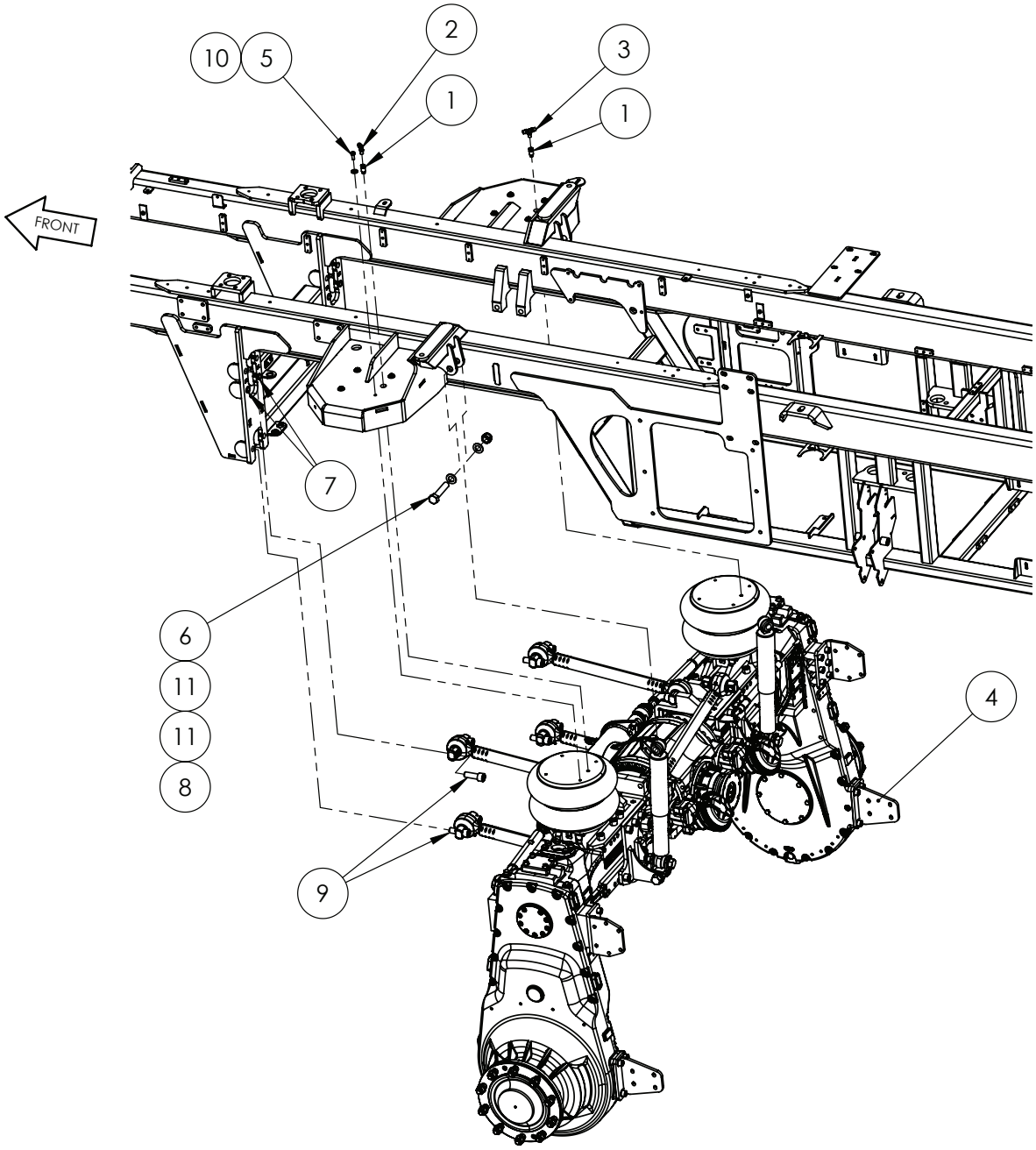

IF DESCRIPTION PREFIX IS ASSEMBLY DRAWING ONLY OR PRODUCTION DRAWING ONLY THE ITEM IS NOT FOR SALE			
ITEM	PART NUMBER	DESCRIPTION	QTY
1	GA7000092	ADAPTOR, EXTENDED, MALE TO FEMALE, 27mm LONG, 1/4BSP	2
2	GA5078518	AIR FITTING, ELBOW, SWIVEL, 3/8" TUBE, 1/4" NPT MALE, PUSH IN, BRASS, ALKON - AQ69-DOTS-6X4	1
3	GA5078521	AIR FITTING, TEE, SWIVEL, 3/8" TUBE, 1/4" NPT MALE, PUSH IN, BRASS, ALKON - AQ72-DOTS-6X4	1
4	GA4954165	AXLE ASSEMBLY, FRONT, 4WD, CROP CRUISER, LARGE FRAME S3	1
5	GA5002601	BOLT 3/8" UNC X 1" GR8 ZP YELLOW	8
6	GA5011346	BOLT M24 X 115 GR8.8 ZP 75-77mm SHANK	2
7	GA5026240	END CAP, PLASTIC, BLACK, INSERT, ROUND. 25mm,1.25 - 1.6mm WALL	4
8	GA5012469	NUT M24 NYLOC ZP	2
9	GA5025914	SHCS M22 X 65 12.9 ZP	8
10	GA5002627	WASHER 3/8" FLAT ZP HT YELLOW	8
11	GA5001891	WASHER M24 FLAT HD SS	4
GA7800250 GOLDACRES		ASSEMBLY DRAWING ONLY, 4WD FRONT AXLE, DROMOS, LARGE FRAME CC, MY25	REV 00

Torque Rods & Shock Absorbers, Front Axle, 4WD

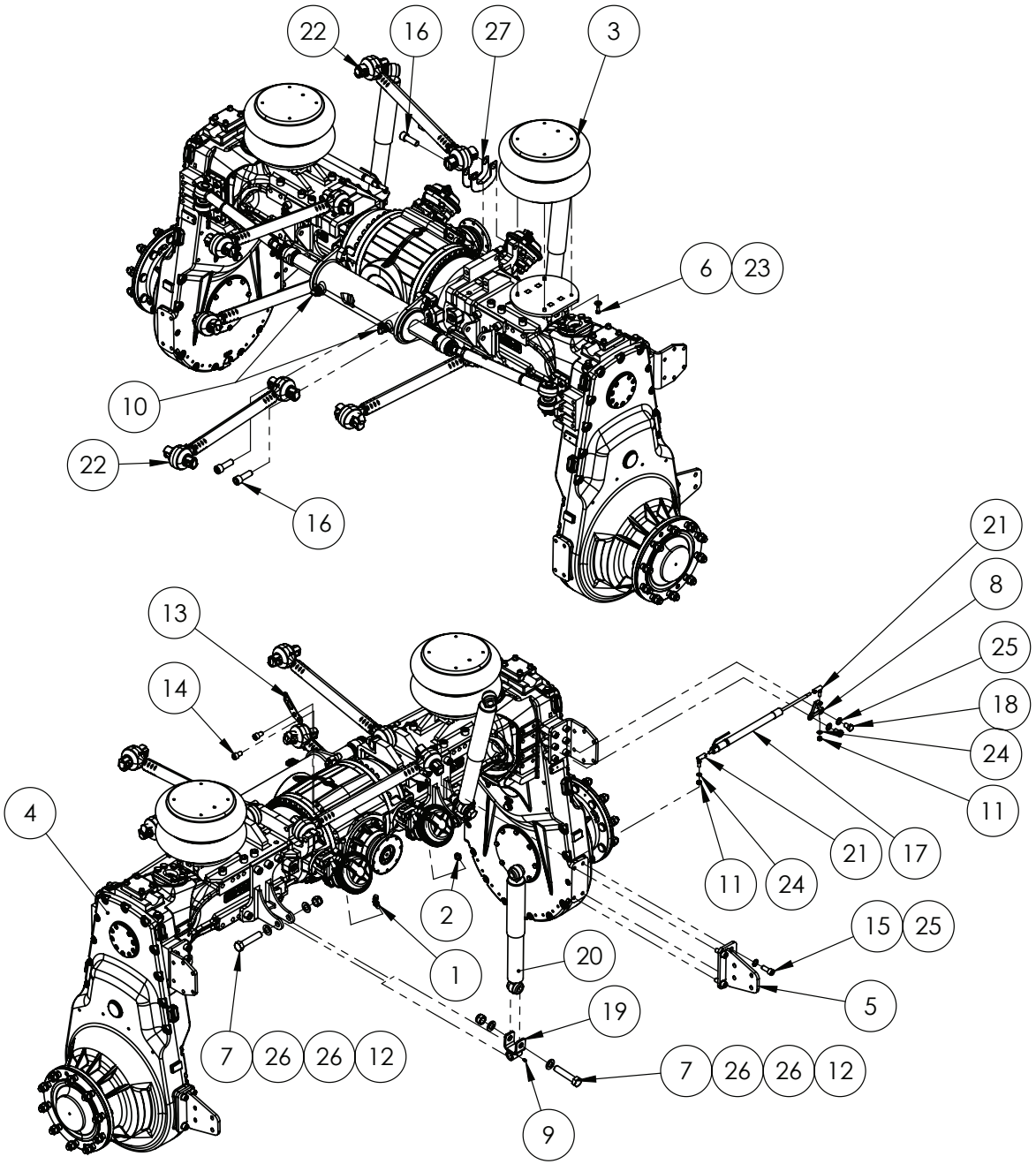

IF DESCRIPTION PREFIX IS ASSEMBLY DRAWING ONLY OR PRODUCTION DRAWING ONLY THE ITEM IS NOT FOR SALE			
ITEM	PART NUMBER	DESCRIPTION	QTY
1	GA5026054	AIR FITTING, ELBOW, 12mm" TUBE, M22 MALE, PUSH IN, BRASS, ALKON - MAQ69-DOT-12X22	1
2	GA5026094	AIR FITTING, STRAIGHT, 12mm TUBE, M16 MALE, PUSH IN, BRASS, GP, MAQ68-DOT-12XM16	1
3	GA5079014	AIR SPRING, FD 530-35-544 DOUBLE CONVOLUTION AIR ACTUATOR, CONTITECH, 64607	2
4	GA2700185	AXLE, ASSEMBLY, FRONT 4WD CC, DROMOS, LARGE FRAME SP, S3 MY25	1
5	GA4605055	BRACKET, MUDGUARD PIPE MOUNT, DROP LEG REAR, LARGE FRAME CC S3	2
6	GA5002601	BOLT 3/8" UNC X 1" GR8 ZP YELLOW	8
7	GA5011346	BOLT M24 X 115 GR8.8 ZP 75-77mm SHANK	4
8	GA4000405	BRACKET, STEERING SENSOR MOUNT, G8 S3 4WD	1
9	GA5050450	GREASE NIPPLE, 6mm	2
10	GA3500722	HYDRAULIC ADAPTOR, ELBOW, 90 DEGREE, 3/4" JIC MALE X 1/2" BSPP MALE O-RING, S76-0812	2
11	GA5000141	NUT M10 NYLOC ZP	2
12	GA5012469	NUT M24 NYLOC ZP	4
13	GA4000371	Plate, Ride Height Control, Front Axle Attachment, Large Frame, S3	1
14	GA5000905	SHCS M16 X 25 GR12.9 ZP	2
15	GA5000925	SHCS M16 X 40 GR12.9 ZP	8
16	GA5025914	SHCS M22 X 65 12.9 ZP	10
17	GA3000144	SENSOR, LINEAR NON CONTACT, STEERING, 250mm, RAVEN 10630181021	1
18	GA5000903	SET SCREW M16 X 25 GR8.8 ZP	2
19	GA4660670	SHOCK ABSORBER MOUNT, FRONT AXLE, SELF PROPELLED 2015	2
20	GA2500001	SHOCK ABSORBER, DAMPER, 267mm STROKE, F5007, MUNRO	2
21	GA3000146	STUD END, M10 SUIT GA3000144, RAVEN 11030001030	2
22	GA5079212	TORQUE ROD, ASSEMBLY - FRAP, LARGE FRAME SP, S3	5
23	GA5002627	WASHER 3/8" FLAT ZP HT YELLOW	8
24	GA5000117	WASHER M10 FLAT SS HD	2
25	GA5001055	WASHER M16 FLAT SS	10
26	GA5001891	WASHER M24 FLAT HD SS	8
27	GA4000759	PLATE, PANHARD SHIM, 1mm, LARGE FRAME S3	2
GA4954165 GOLDACRES		AXLE ASSEMBLY, FRONT, 4WD, CROP CRUISER, LARGE FRAME S3	REV 00.F

Rear Axle to Chassis Mounting, 4WD

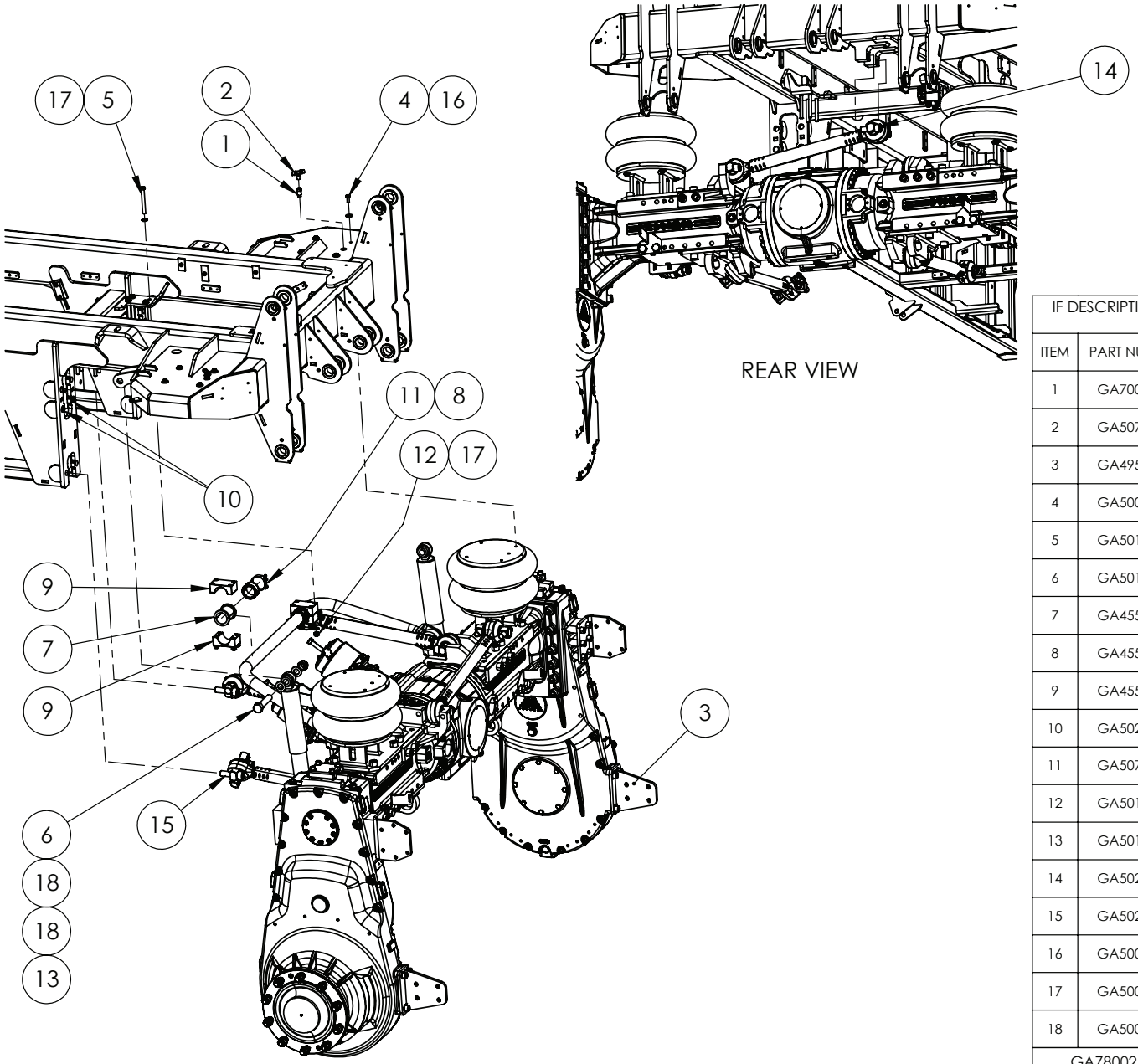

IF DESCRIPTION PREFIX IS ASSEMBLY DRAWING ONLY OR PRODUCTION DRAWING ONLY THE ITEM IS NOT FOR SALE			
ITEM	PART NUMBER	DESCRIPTION	QTY
1	GA7000092	ADAPTOR, EXTENDED, MALE TO FEMALE, 27mm LONG, 1/4BSP	2
2	GA5078521	AIR FITTING, TEE, SWIVEL, 3/8" TUBE, 1/4" NPT MALE, PUSH IN, BRASS, ALKON - AQ72-DOTS-6X4	2
3	GA4954170	AXLE ASSEMBLY, REAR, 4WD, CROP CRUISER, LARGE FRAME S3	1
4	GA5002601	BOLT 3/8" UNC X 1" GR8 ZP YELLOW	8
5	GA5011199	BOLT M12 X 110 GR8.8 ZP	8
6	GA5011346	BOLT M24 X 115 GR8.8 ZP 75-77mm SHANK	2
7	GA4550710	BUSH, LOWER SWAY BAR, 48mm ID NYLON, G3V G4V	2
8	GA4551610	BUSH, SWAY BAR CLAMP, LATERAL LOCK, MY21	2
9	GA4551270	CLAMP, SWAY BAR, CHASSIS MOUNT	4
10	GA5026240	END CAP, PLASTIC, BLACK, INSERT, ROUND. 25mm,1.25 - 1.6mm WALL	4
11	GA5078424	HOSE CLAMP, 60 - 63mm, WIDE BAND T-BOLT, SS, PERFORMER	2
12	GA5012461	NUT M12 NYLOC ZP	8
13	GA5012469	NUT M24 NYLOC ZP	2
14	GA5025914	SHCS M22 X 65 12.9 ZP	2
15	GA5025915	SHCS M22 X 80 12.9 ZP	8
16	GA5002627	WASHER 3/8" FLAT ZP HT YELLOW	8
17	GA5000577	WASHER M12 FLAT SS HD	16
18	GA5001891	WASHER M24 FLAT HD SS	4
GA7800252 GOLDACRES		ASSEMBLY DRAWING ONLY, 4WD REAR AXLE, LARGE FRAME CC, MY25	REV 00

Rear Axle Assembly, 4WD

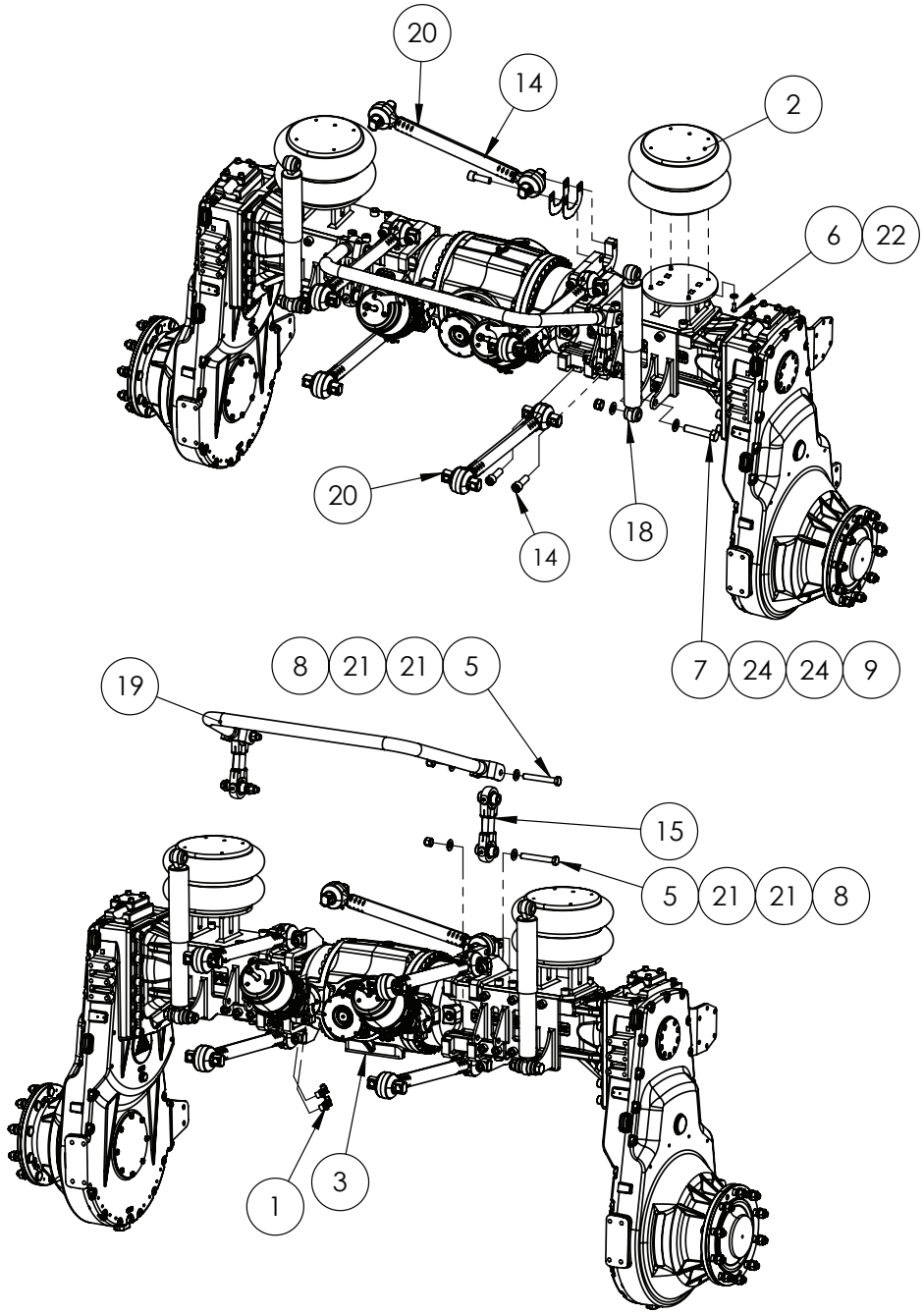

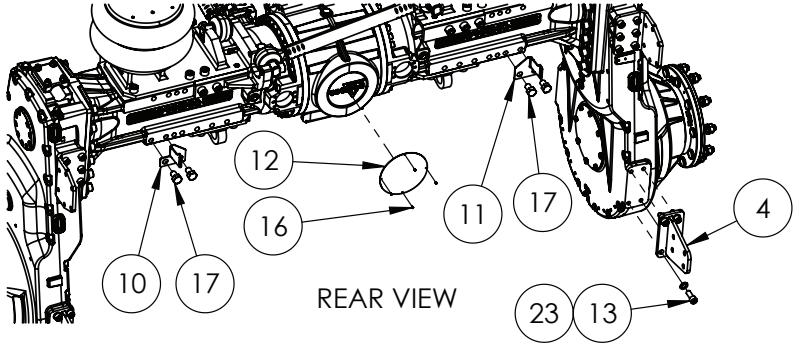

IF DESCRIPTION PREFIX IS ASSEMBLY DRAWING ONLY OR PRODUCTION DRAWING ONLY THE ITEM IS NOT FOR SALE			
ITEM	PART NUMBER	DESCRIPTION	QTY
1	GA5026093	AIR FITTING, ELBOW, 12mm" TUBE, M22 MALE, PUSH IN, BRASS, GP, MDQ69DOTS12M22	4
2	GA5079014	AIR SPRING, FD 530-35-544 DOUBLE CONVOLUTION AIR ACTUATOR, CONTITECH, 64607	2
3	GA2700186	AXLE, ASSEMBLY, REAR 4WD CC, DROMOS, LARGE FRAME SP, S3 MY25	1
4	GA4605055	BRACKET, MUDGUARD PIPE MOUNT, DROP LEG REAR, LARGE FRAME CC S3	2
5	GA5070335	BOLT 3/4" UNC X 5 1/2" GR8 ZP	4
6	GA5002601	BOLT 3/8" UNC X 1" GR8 ZP YELLOW	8
7	GA5011346	BOLT M24 X 115 GR8.8 ZP 75-77mm SHANK	2
8	GA5048430	NUT 3/4" NYLOC UNC ZP	4
9	GA5012469	NUT M24 NYLOC ZP	2
10	GA4000055	PLATE, HEIGHT CONTROL, AXLE TAB, LARGE FRAME S2	1
11	GA4000063	PLATE, HEIGHT CONTROL, AXLE TAB, RHS, LARGE FRAME S2	1
12	GA4510615	PLATE, LOGO COVER, DROMOS AXLE	1
13	GA5000925	SHCS M16 X 40 GR12.9 ZP	8
14	GA5025914	SHCS M22 X 65 12.9 ZP	10
15	GA4949935	SWAY BAR LINK ASSEMBLY, S3	2
16	GA0500040	SCREW, U DRIVE, 4G X 1/4", ZP	4
17	GA5011323	SET SCREW M20 X 30 GR8.8 ZP	4
18	GA2500001	SHOCK ABSORBER, DAMPER, 267mm STROKE, F5007, MUNRO	2
19	GA2500004	SWAY BAR, 48mm FABRICATED, G6 MY20	1
20	GA5079212	TORQUE ROD, ASSEMBLY - FRAP, LARGE FRAME SP, S3	5
21	GA5001045	WASHER 3/4" FLAT ZP	8
22	GA5002627	WASHER 3/8" FLAT ZP HT YELLOW	8
23	GA5001055	WASHER M16 FLAT SS	8
24	GA5001891	WASHER M24 FLAT HD SS	4
25	GA4000759	PLATE, PANHARD SHIM, 1mm, LARGE FRAME S3	2
GA4954170 GOLDACRES		AXLE ASSEMBLY, REAR, 4WD, CROP CRUISER, LARGE FRAME S3	REV 00.G

Torque Rod

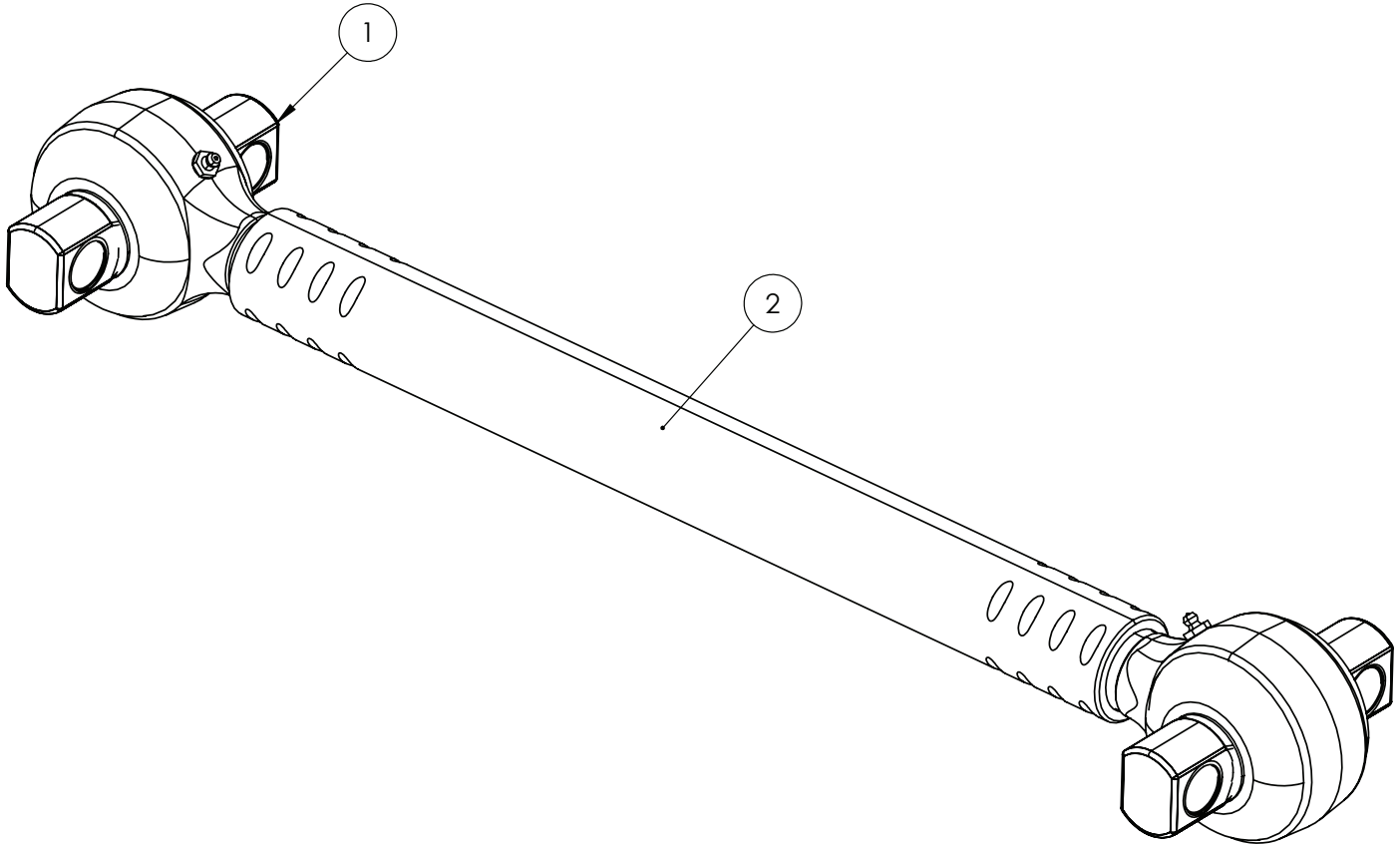

IF DESCRIPTION PREFIX IS ASSEMBLY DRAWING ONLY OR PRODUCTION DRAWING ONLY THE ITEM IS NOT FOR SALE			
ITEM	PART NUMBER	DESCRIPTION	QTY
1	GA5026070	BUSH, TORQUE ROD, SPHERICAL ENDS, CRIMPED ROD, FRAP, LF S3	2
2	GA5026069	ROD, TORQUE ROD, SPHERICAL ENDS, CRIMPED ROD, FRAP, LF S3	1
GA5079212 GOLDACRES		TORQUE ROD, ASSEMBLY - FRAP, TM893_CMP, LARGE FRAME SP, S3	REV 00.B

Sway Bar Link Assembly

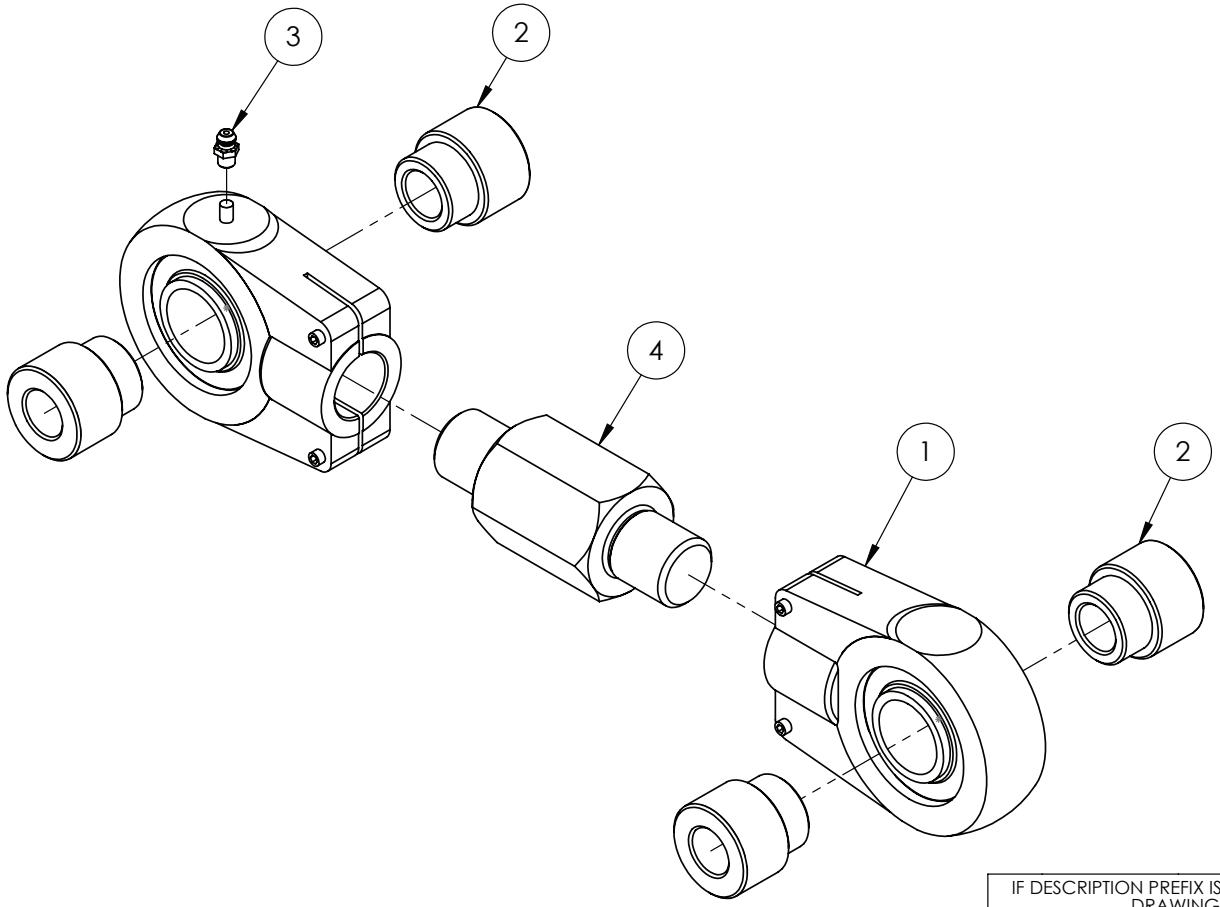

IF DESCRIPTION PREFIX IS ASSEMBLY DRAWING ONLY OR PRODUCTION DRAWING ONLY THE ITEM IS NOT FOR SALE			
ITEM	PART NUMBER	DESCRIPTION	QTY
1	GA5025500	BEARING, ROSE END HOUSING, M28 SCREW ON	2
2	GA4551465	BUSH, SPACER, BALL END, SWAY BAR LINK, G6 MY20	4
3	GA5012203	GREASE NIPPLE, SHORT, 1/4 UNF, MACH0207	2
4	GA4551505	LINK, SWAY BAR, M28 THREADS, G6 MY20	1
GA4949935 GOLDACRES		SWAY BAR LINK ASSEMBLY, G6 MY20	REV 02.A

Towbar, Rear Reverse Camera & Light Mounting

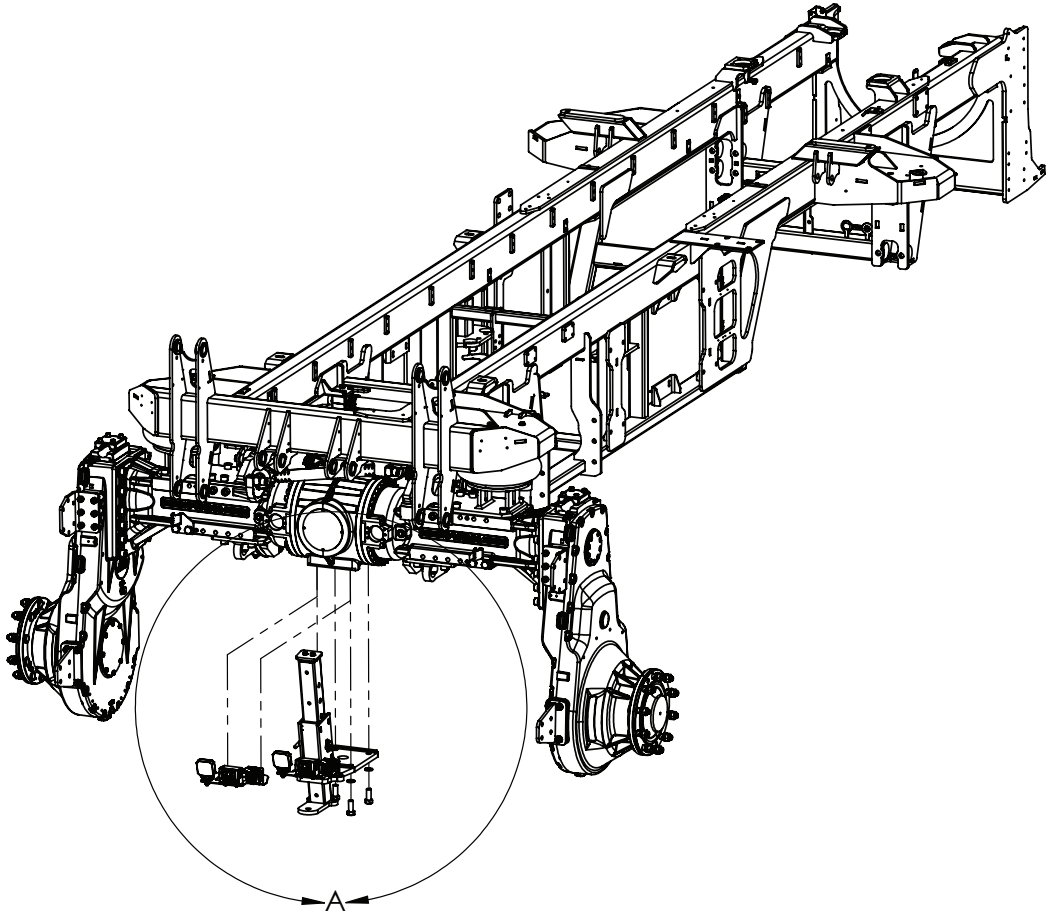

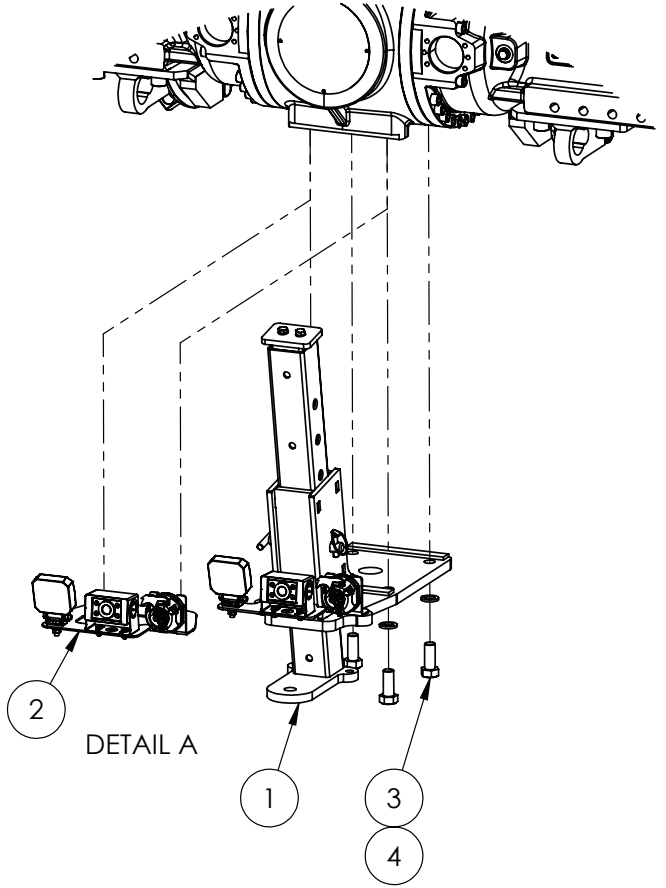

FIT ITEM:

(1) IF 40089 OPTIONED

(2) IF 40081 OPTIONED

IF DESCRIPTION PREFIX IS ASSEMBLY DRAWING ONLY OR PRODUCTION DRAWING ONLY THE ITEM IS NOT FOR SALE			
ITEM	PART NUMBER	DESCRIPTION	QTY
1	GA4909536	ASSEMBLY DRAWING ONLY, TOWBAR, LARGE FRAME SP, S3	1
2	GA4909615	ASSEMBLY DRAWING ONLYT, REAR REVERSE CAMERA AND LIGHT, SERIES 3	1
3	GA5011321	SET SCREW M20 X 50 GR8.8 ZP	4
4	GA5001721	WASHER M20 SPRING SS	4
GA7800426 GOLDACRES		ASSEMBLY DRAWING ONLY, TOWBAR 4X4 AXLE, LARGE FRAME SP	REV 00

Towbar, Rear Reverse Camera & Light Assembly

FITTED WITH OPTION 40089

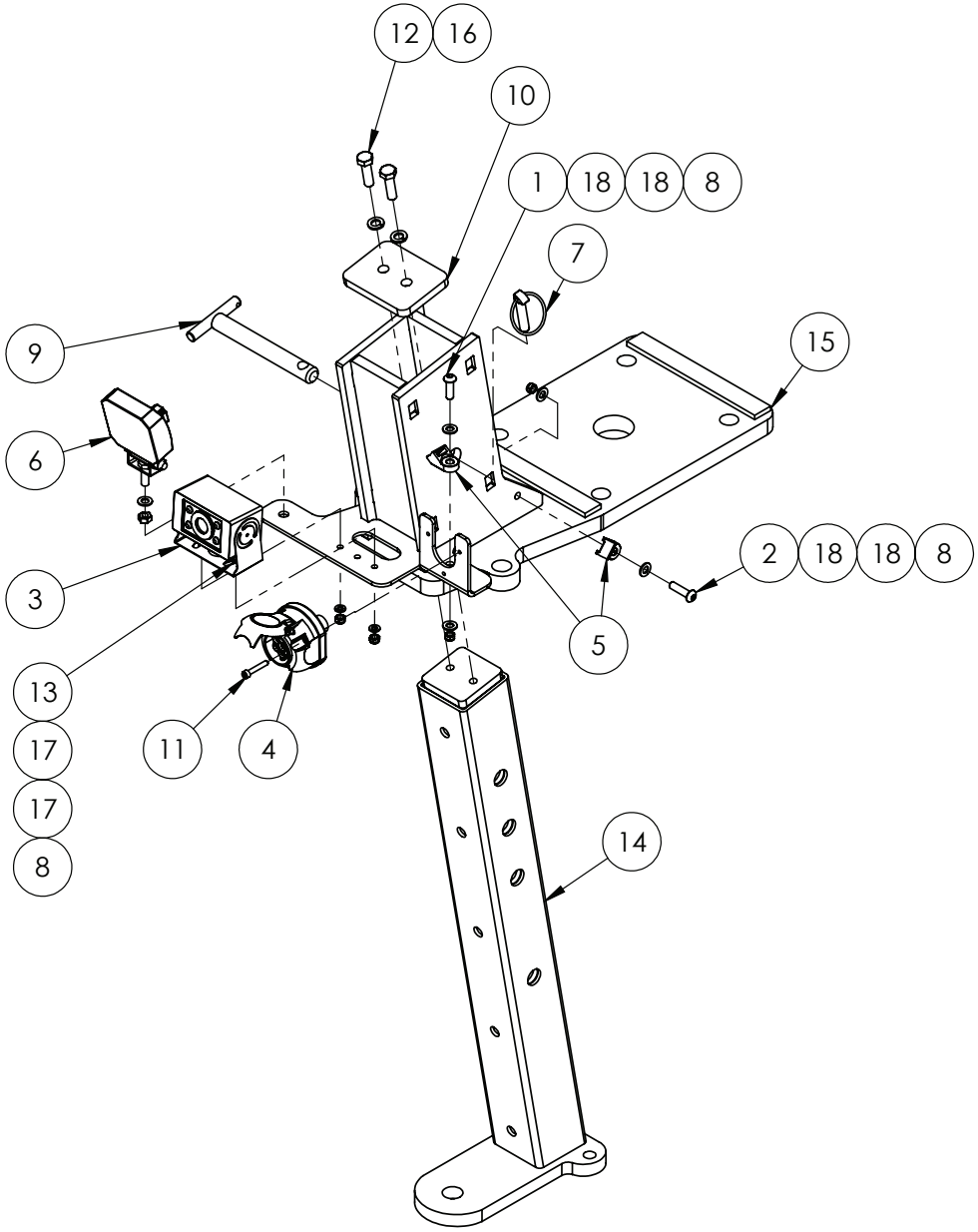

IF DESCRIPTION PREFIX IS ASSEMBLY DRAWING ONLY OR PRODUCTION DRAWING ONLY THE ITEM IS NOT FOR SALE			
ITEM	PART NUMBER	DESCRIPTION	QTY
1	GA5011473	BHCS M8 X 25 SS A2-70	1
2	GA5050680	BHCS M8 X 30 SS A2-70	1
3	GA3000909	CAMERA, REAR VIEW, 120 DEG CCD, WITH BRACKET, RKSCAM3-120	1
4	GA5023230	ELECTRICAL CONNECTOR, 7 PIN LARGE ROUND PLASTIC TRAILER SOCKET BOLT ON	1
5	GA5026172	HARNESS CLIP, 36mm X 19mm M8 HOLE HI-IMPACT UV BK	2
6	GA3001114	LIGHT, LED, COMPACT FLOOD 20W, IONNIC, 98-8210	1
7	GA5010905	LINCH PIN, 7/16" OD X 45 LONG	1
8	GA5048115	NUT M6 NYLOC ZP	4
9	GA4659185	PIN, TOW BAR, SELF PROPELLED	1
10	GA4504175	PLATE- TOP KEEPER TOW BAR SP 2011	1
11	GA5003595	SHCS M5 X 30 GR12.9 ZP	3
12	GA5006111	SET SCREW M10 X 35 GR8.8 ZP	2
13	GA5011395	SET SCREW M6 X 16 SS A2-70	2
14	GA4605083	TOW BALL MOUNT, LARGE FRAME SP, S3	1
15	GA4605100	TOW BAR AXLE MOUNTED, CROP CRUISER, LARGE FRAME S3	1
16	GA5000137	WASHER M10 SPRING SS	2
17	GA5004437	WASHER M6 FLAT SS HD	4
18	GA5003643	WASHER M8 FLAT SS HD	4
GA4909536 GOLDACRES		ASSEMBLY DRAWING ONLY, TOWBAR, LARGE FRAME SP, S3	REV 00

Rear Reverse Camera, Light & Trailer Socket Mounting Bracket Assembly

FITTED WITH OPTION 40081

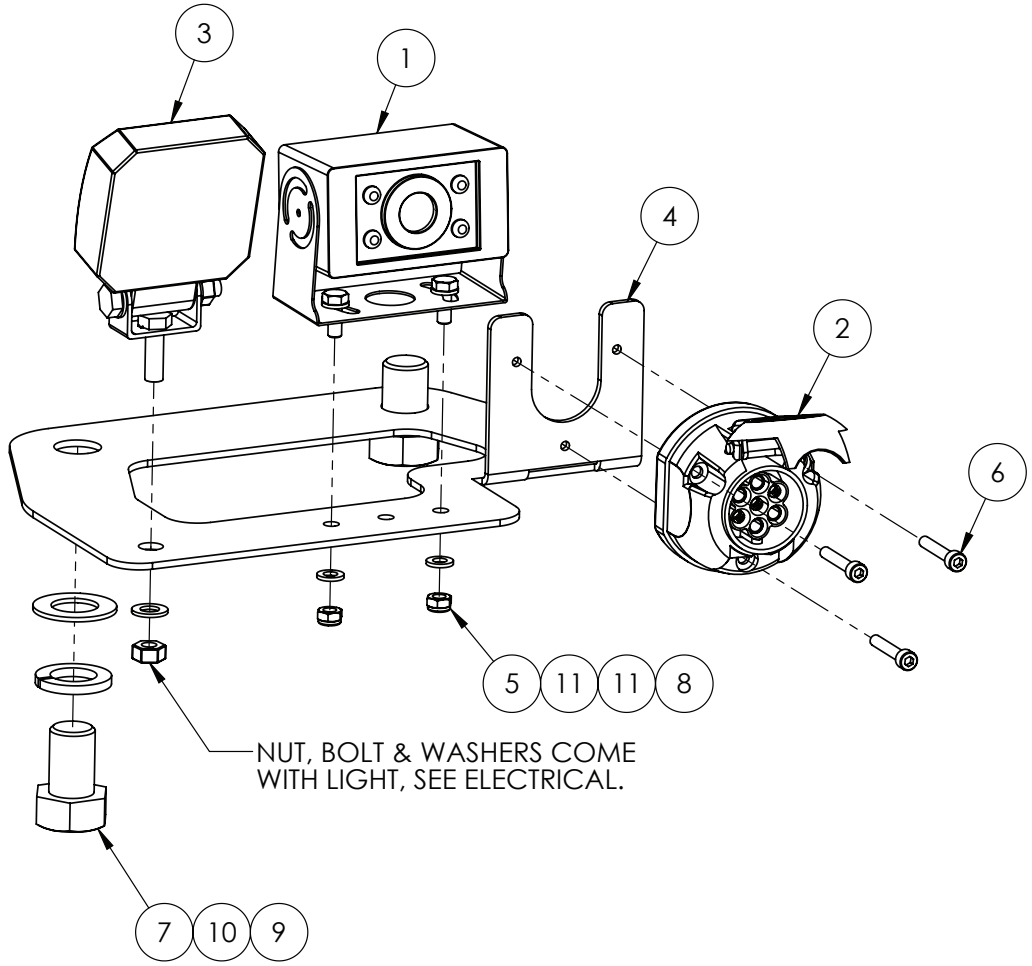

IF DESCRIPTION PREFIX IS ASSEMBLY DRAWING ONLY OR PRODUCTION DRAWING ONLY THE ITEM IS NOT FOR SALE			
ITEM	PART NUMBER	DESCRIPTION	QTY
1	GA3000909	CAMERA, REAR VIEW, 120 DEG CCD, WITH BRACKET, RKSCAM3-120	1
2	GA5023230	ELECTRICAL CONNECTOR, 7 PIN LARGE ROUND PLASTIC TRAILER SOCKET BOLT ON	1
3	GA3001114	LIGHT, LED, COMPACT FLOOD 20W, IONNIC, 98-8210	1
4	GA4000551	MOUNTING BRACKET, REAR REVERSE CAMERA AND LIGHT, G8 S3	1
5	GA5048115	NUT M6 NYLOC ZP	2
6	GA5003595	SHCS M5 X 30 GR12.9 ZP	3
7	GA5011323	SET SCREW M20 X 30 GR8.8 ZP	2
8	GA5011395	SET SCREW M6 X 16 SS A2-70	2
9	GA5001742	WASHER M20 FLAT SS 2.0mm	2
10	GA5001721	WASHER M20 SPRING SS	2
11	GA5004437	WASHER M6 FLAT SS HD	4
GA4909615 GOLDACRES		ASSEMBLY DRAWING ONLYT, REAR REVERSE CAMERA AND LIGHT, SERIES 3	REV 00

Drive Shafts, Gearbox to Transfer Case, Chassis Mount

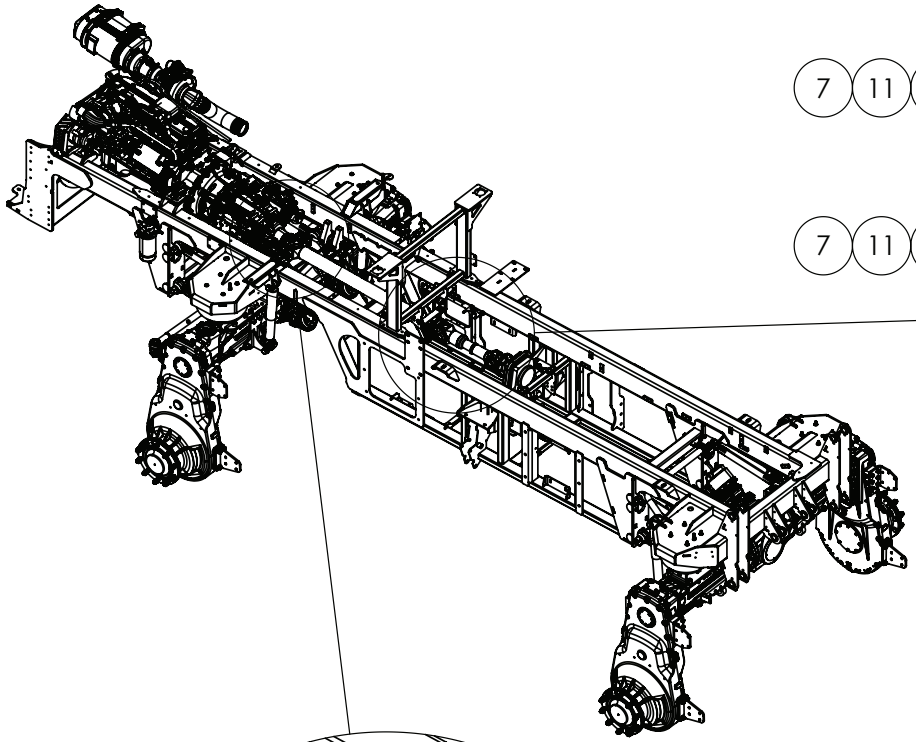

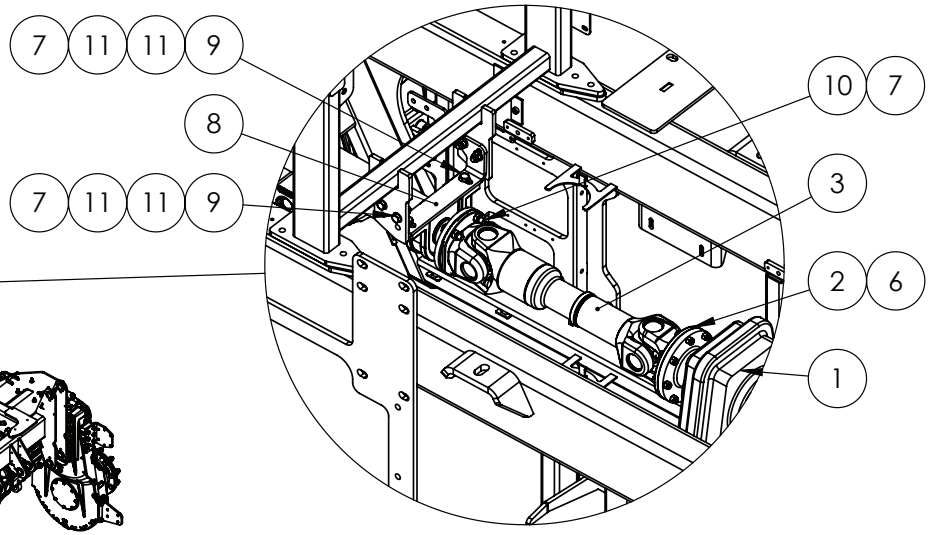

CHASSIS MOUNT AND
FRONT TOP TRANSFER CASE

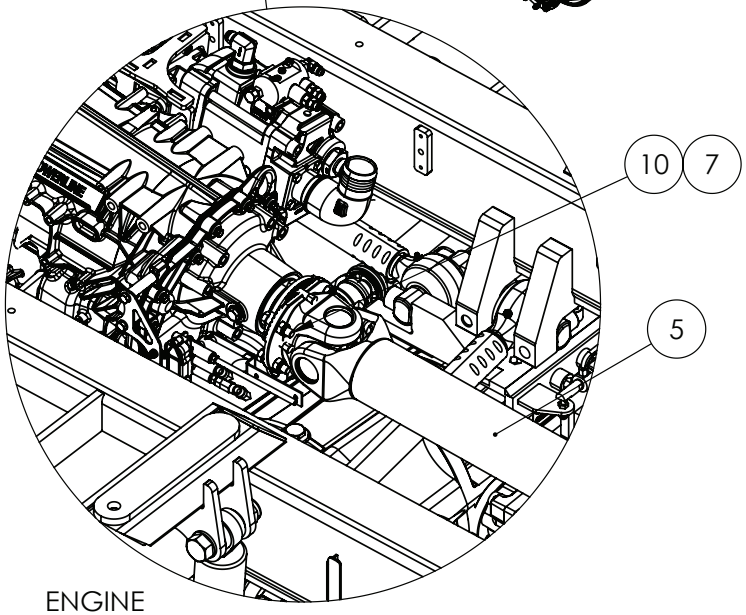

ENGINE

IF DESCRIPTION PREFIX IS ASSEMBLY DRAWING ONLY OR PRODUCTION DRAWING ONLY THE ITEM IS NOT FOR SALE			
ITEM	PART NUMBER	DESCRIPTION	QTY
1	GA7800247	ASSEMBLY DRAWING ONLY, TRANSFER CASE INSTALLATION, S3	1
2	GA0500032	BOLT 3/8" UNF X 1 1/2" GR8 ZP	24
3	GA2700198	DRIVE SHAFT, CENTRE BEARING TO TRANSFER CASE, LARGE FRAME SP, MY25	1
5	GA2700197	DRIVE SHAFT, TRANSMISSION TO CENTRE BEARING, LARGE FRAME SP, S3 MY25	1
6	GA0500026	NUT 3/8" NYLOC UNF ZP	40
7	GA5012461	NUT M12 NYLOC ZP	14
8	GA4504345	PLATE, CENTRE BEARING MOUNT, SWB	1
9	GA5000319	SET SCREW M12 X 40 GR8.8 ZP	6
10	GA5000327	SET SCREW M12 X 45 GR8.8 ZP	8
11	GA5000577	WASHER M12 FLAT SS HD	12
GA7800276 GOLDACRES		ASSEMBLY DRAWING ONLY, TRANSFER CASE AND DRIVE SHAFTS, LARGE FRAME SP S3, MY25	REV 01.D

Drive Shaft, Rear of Transfer Case & Front Differential

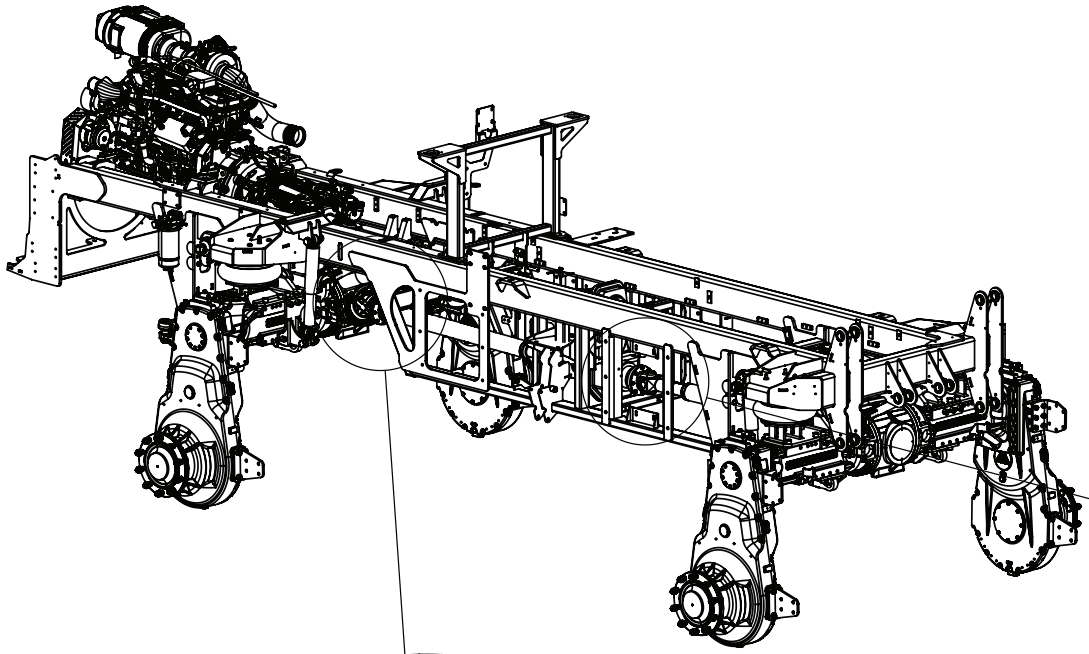

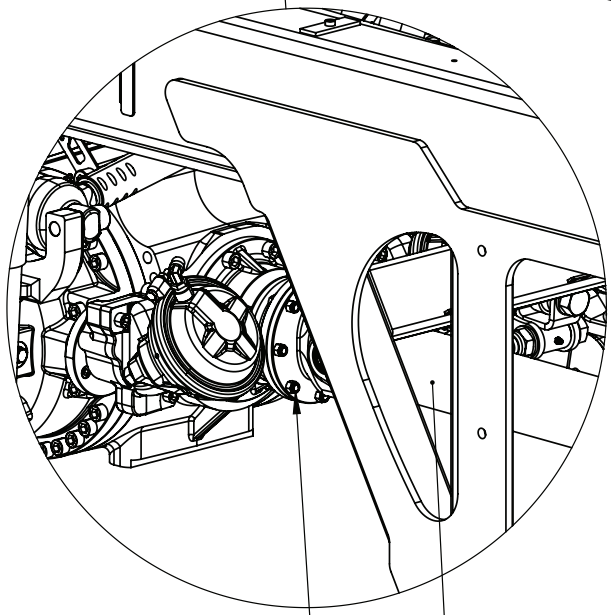

FRONT AXLE

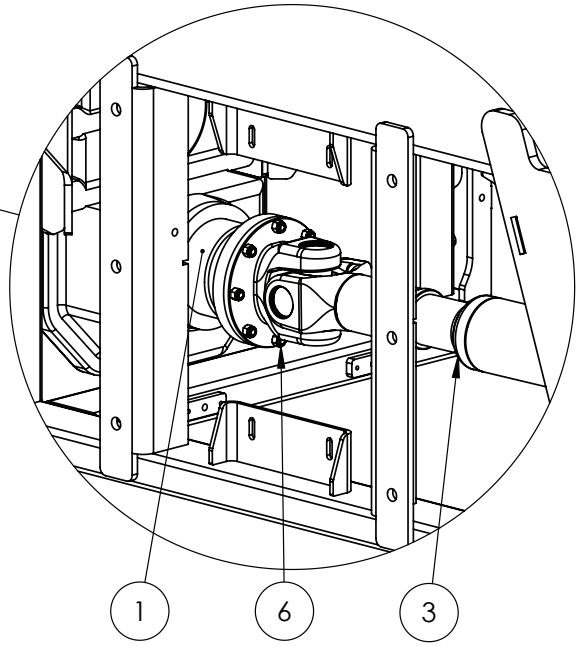

REAR BOTTOM TRANSFER CASE

IF DESCRIPTION PREFIX IS ASSEMBLY DRAWING ONLY OR PRODUCTION DRAWING ONLY THE ITEM IS NOT FOR SALE			
ITEM	PART NUMBER	DESCRIPTION	QTY
1	GA7800247	ASSEMBLY DRAWING ONLY, TRANSFER CASE INSTALLATION, S3	1
2	GA0500032	BOLT 3/8" UNF X 1 1/2" GR8 ZP	24
3	GA2700200	DRIVE SHAFT, TRANSFER CASE TO AXLE 4X4, LARGE FRAME SP, S3 MY25	2
6	GA0500026	NUT 3/8" NYLOC UNF ZP	40
GA7800276 GOLDACRES		ASSEMBLY DRAWING ONLY, TRANSFER CASE AND DRIVE SHAFTS, LARGE FRAME SP S3, MY25	REV 01.D

Drive Shaft, Front of Transfer Case & Rear Differential

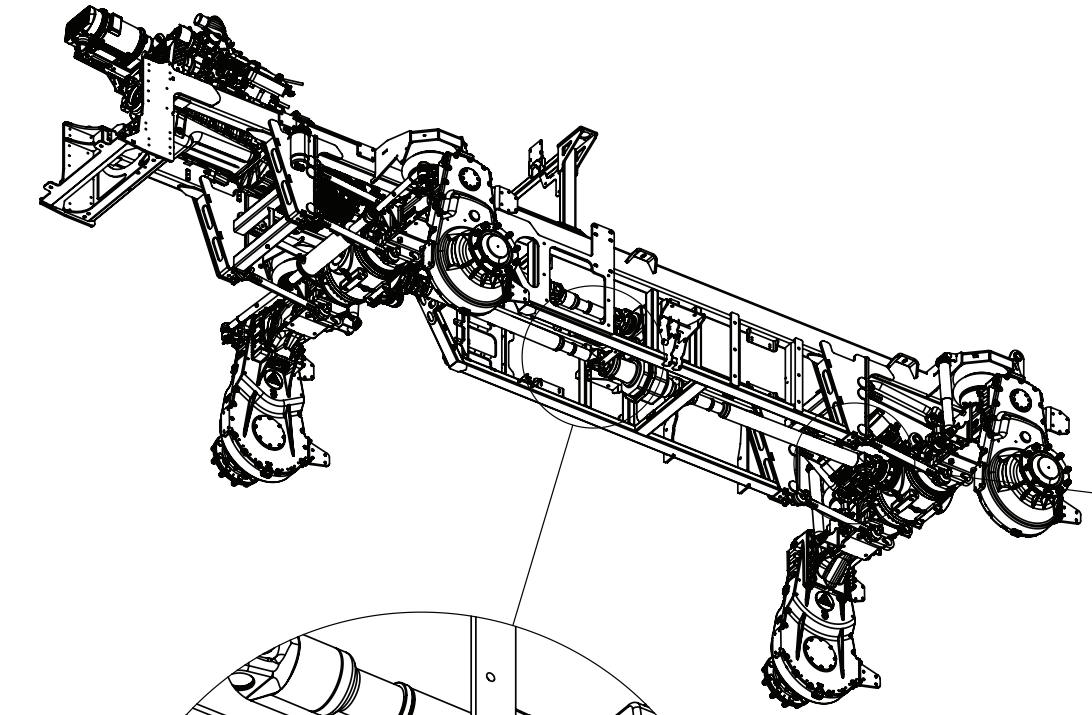

REAR AXLE

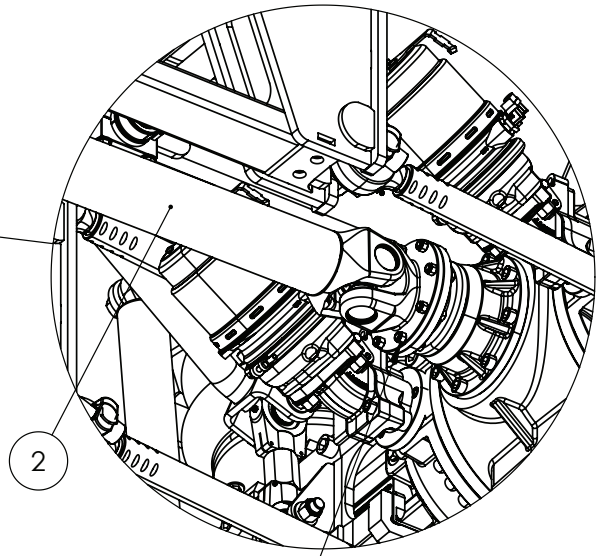

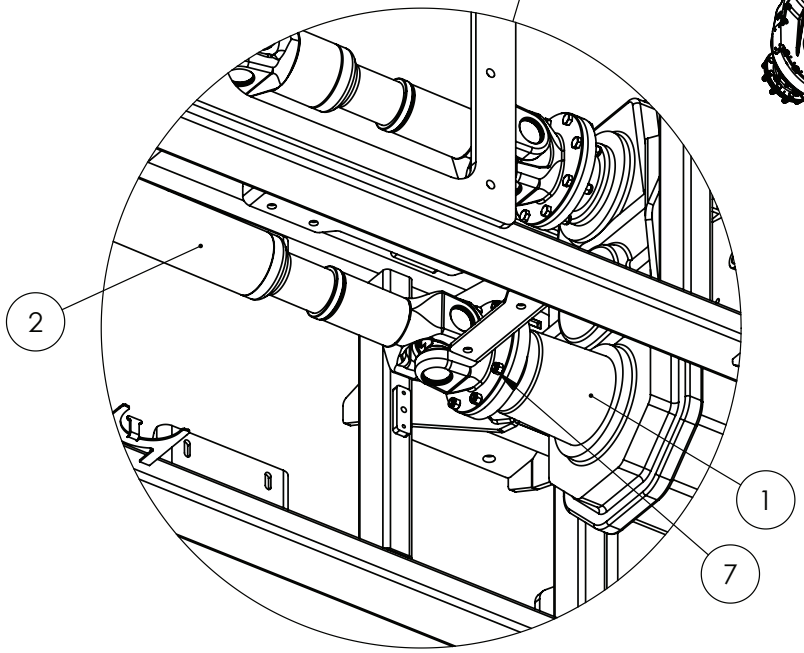

FRONT BOTTOM TRANSFER CASE

IF DESCRIPTION PREFIX IS ASSEMBLY DRAWING ONLY OR PRODUCTION DRAWING ONLY THE ITEM IS NOT FOR SALE			
ITEM	PART NUMBER	DESCRIPTION	QTY
1	GA7800247	ASSEMBLY DRAWING ONLY, TRANSFER CASE INSTALLATION, S3	1
2	GA2700200	DRIVE SHAFT, TRANSFER CASE TO AXLE 4X4, LARGE FRAME SP, S3 MY25	2
6	GA0500032	BOLT 3/8" UNF X 1 1/2" GR8 ZP	24
7	GA0500026	NUT 3/8" NYLOC UNF ZP	40
GA7800276 GOLDACRES		ASSEMBLY DRAWING ONLY, TRANSFER CASE AND DRIVE SHAFTS, LARGE FRAME SP S3, MY25	REV 01.D

Drive Shaft, Driveline Assembly

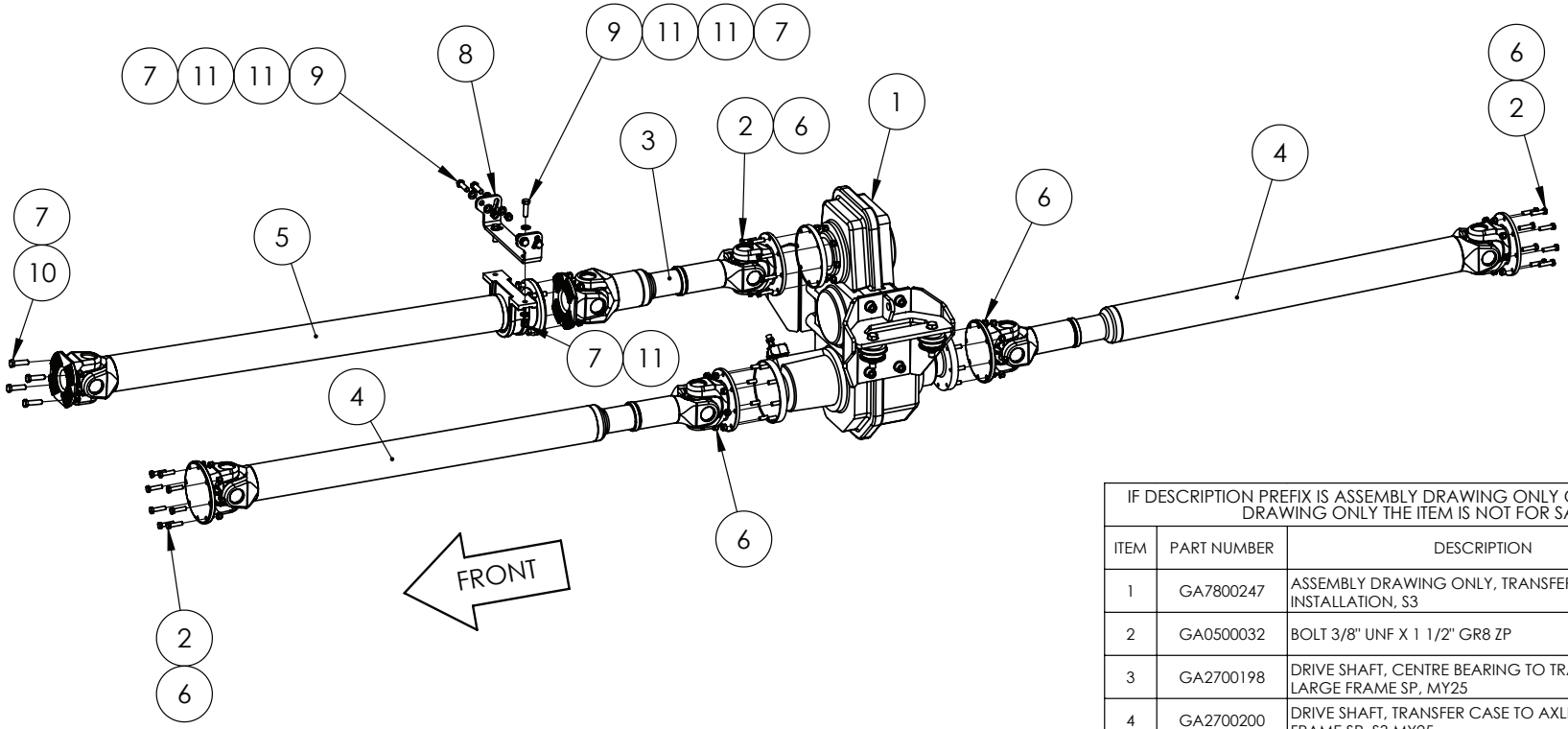

IF DESCRIPTION PREFIX IS ASSEMBLY DRAWING ONLY OR PRODUCTION DRAWING ONLY THE ITEM IS NOT FOR SALE			
ITEM	PART NUMBER	DESCRIPTION	QTY
1	GA7800247	ASSEMBLY DRAWING ONLY, TRANSFER CASE INSTALLATION, S3	1
2	GA0500032	BOLT 3/8" UNF X 1 1/2" GR8 ZP	24
3	GA2700198	DRIVE SHAFT, CENTRE BEARING TO TRANSFER CASE, LARGE FRAME SP, MY25	1
4	GA2700200	DRIVE SHAFT, TRANSFER CASE TO AXLE 4X4, LARGE FRAME SP, S3 MY25	2
5	GA2700197	DRIVE SHAFT, TRANSMISSION TO CENTRE BEARING, LARGE FRAME SP, S3 MY25	1
6	GA0500026	NUT 3/8" NYLOC UNF ZP	40
7	GA5012461	NUT M12 NYLOC ZP	14
8	GA4504345	PLATE, CENTRE BEARING MOUNT, SWB	1
9	GA5000319	SET SCREW M12 X 40 GR8.8 ZP	6
10	GA5000327	SET SCREW M12 X 45 GR8.8 ZP	8
11	GA5000577	WASHER M12 FLAT SS HD	12
GA7800276 GOLDACRES		ASSEMBLY DRAWING ONLY, TRANSFER CASE AND DRIVE SHAFTS, LARGE FRAME SP S3, MY25	REV 01.D

Drive Shaft, Transfer Case to Centre Bearing

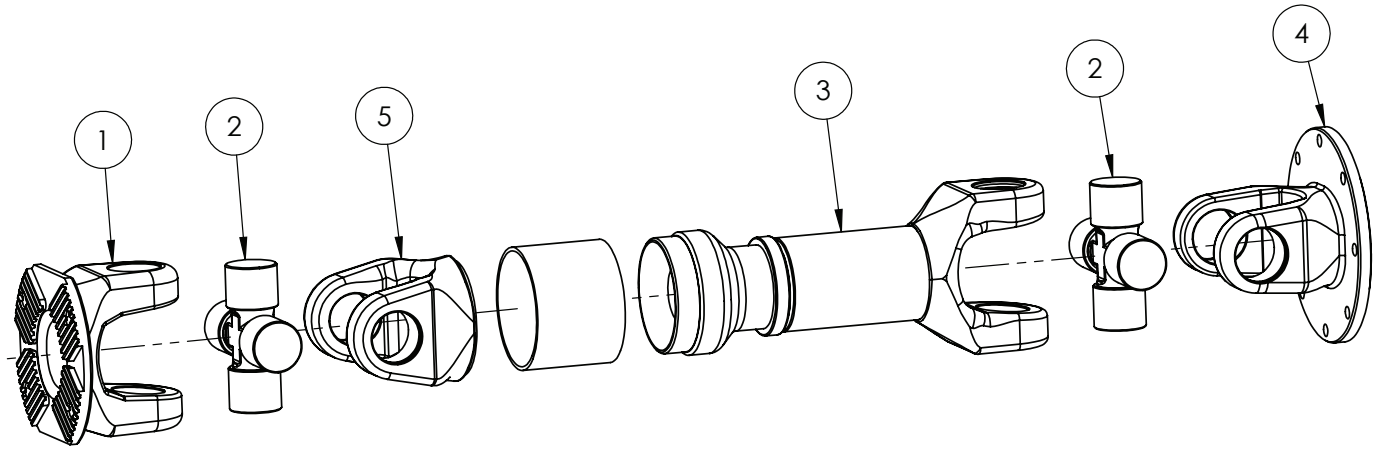

IF DESCRIPTION PREFIX IS ASSEMBLY DRAWING ONLY OR PRODUCTION DRAWING ONLY THE ITEM IS NOT FOR SALE			
ITEM	PART NUMBER	DESCRIPTION	QTY.
1	2-687-352300500	YOKE, FLANGE, XS150, 687.35 SERIES	1
2	GA5026585	UNIVERSAL JOINT, 687.35 SERIES, SERVICE FREE	2
3	GA5026584	YOKE, ASSEMBLY, 687.35 SERIES, 110mm SLIP	1
4	GA5026587	YOKE, FLANGE, 687.35 SERIES, 155.6PCD X 6.125 CIRCULAR 8 BOLT PATTERN	1
5	GA5026586	YOKE, WELD ON, 687.35 SERIES	1
GA2700198 GOLDACRES		DRIVE SHAFT, TRANSFER CASE TO CENTRE BEARING SHAFT, LARGE FRAME SP, MY25	REV 03

Drive Shaft, Transmission to Centre Bearing

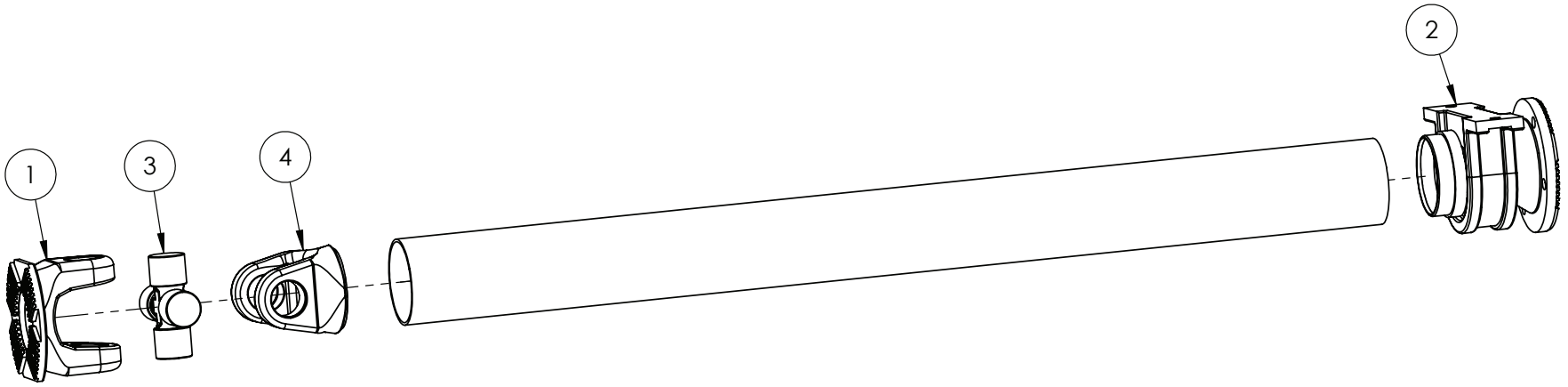

IF DESCRIPTION PREFIX IS ASSEMBLY DRAWING ONLY OR PRODUCTION DRAWING ONLY THE ITEM IS NOT FOR SALE			
ITEM	PART NUMBER	DESCRIPTION	QTY.
1	2-687-352300500	YOKE, FLANGE, XS150, 687.35 SERIES	1
2	GA5026589	BEARING, ASSEMBLY, CENTRE, 68735 SERIES, SUIT, DRIVE SHAFT, GA2700198	1
3	GA5026585	UNIVERSAL JOINT, 687.35 SERIES, SERVICE FREE	1
4	GA5026586	YOKE, WELD ON, 687.35 SERIES	1
GA2700197 GOLDACRES		DRIVE SHAFT, TRANSMISSION TO CENTRE BEARING, LARGE FRAME SP, S3 MY25	REV 02

Drive Shaft, Transfer Case to Axle

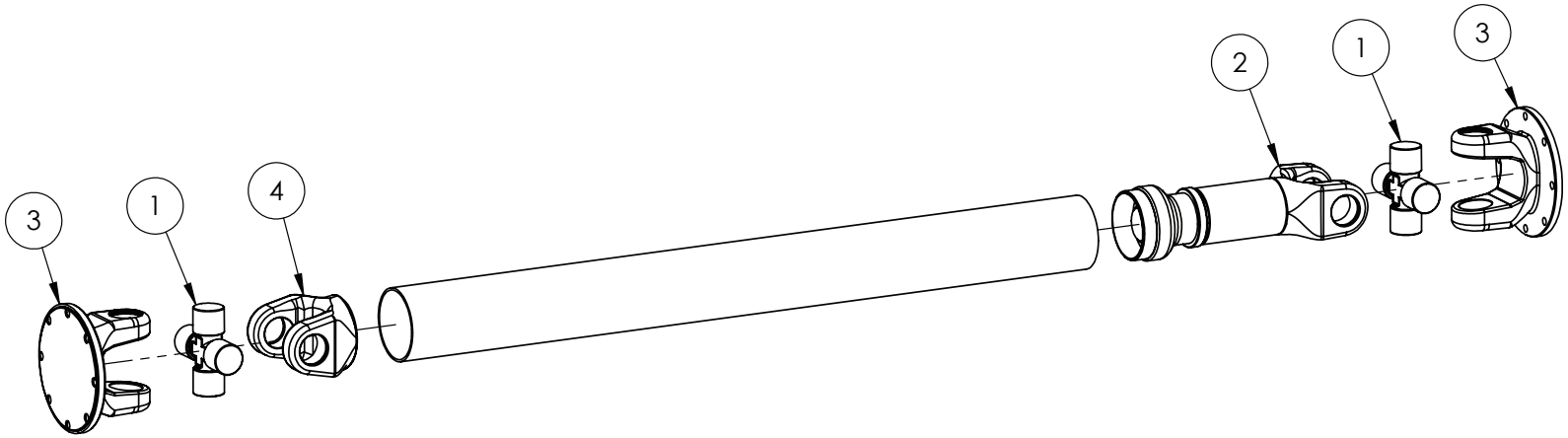

IF DESCRIPTION PREFIX IS ASSEMBLY DRAWING ONLY OR PRODUCTION DRAWING ONLY THE ITEM IS NOT FOR SALE			
ITEM	PART NUMBER	DESCRIPTION	QTY.
1	GA5026585	UNIVERSAL JOINT, 687.35 SERIES, SERVICE FREE	2
2	GA5026584	YOKE, ASSEMBLY, 687.35 SERIES, 110mm SLIP	1
3	GA5026587	YOKE, FLANGE, 687.35 SERIES, 155.6PCD X 6.125 CIRCULAR 8 BOLT PATTERN	2
4	GA5026586	YOKE, WELD ON, 687.35 SERIES	1
GA2700200 GOLDACRES		DRIVE SHAFT, TRANSFER CASE TO AXLE 4X4, LARGE FRAME SP, S3 MY25	REV 02

Transfer Case, Mounting Brackets

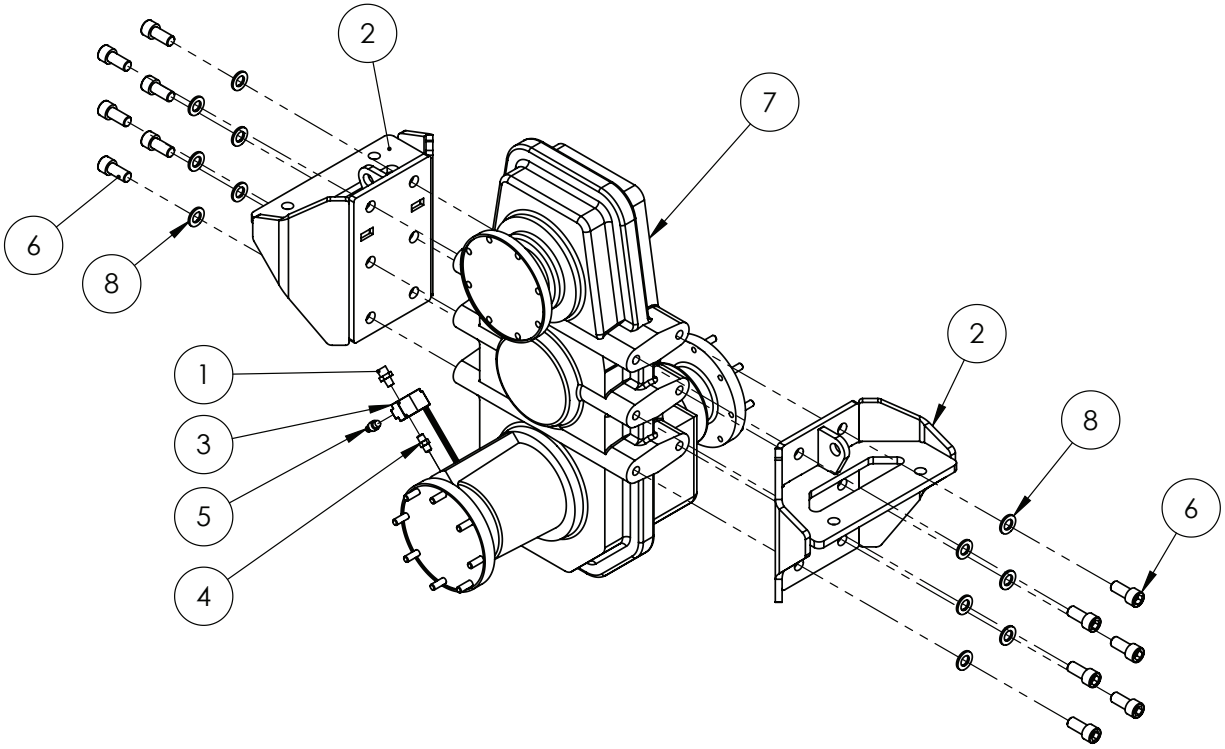

IF DESCRIPTION PREFIX IS ASSEMBLY DRAWING ONLY OR PRODUCTION DRAWING ONLY THE ITEM IS NOT FOR SALE			
ITEM	PART NUMBER	DESCRIPTION	QTY
1	GA5078523	AIR FITTING, STRAIGHT, 3/8" TUBE, 1/8" NPT MALE, BRASS, ALKON AQ68-DOT-6X2	1
2	GA4604975	BRACKET, TRANSFER CASE, CROP CRUISER, LARGE FRAME S3, MY25	2
3	GA5071236	PNEUMATIC SOLENOID VALVE MAC 35 SERIES 1/8" PORTS WITH DEUTSCH CONNECTOR	1
4	GA5025395	PNEUMATIC ADAPTOR, NIPPLE, 1/8" NPT MALE X 1/8" NPT MALE	1
5	GA7000014	RESTRICTOR, ADJUSTABLE EXHAUST, ET-01, PNEUTECH	1
6	GA5000923	SHCS M16 X 35 GR12.9 ZP	12
7	GA2700013	TRANSFER CASE. DIFFERENTIAL WITH LOCK, 1.42308:1 RATIO, DROMOS	1
8	GA5001043	WASHER M16 FLAT SS HD	12
GA4909493 GOLDACRES		PRODUCTION DRAWING ONLY, TRANSFER CASE, LARGE FRAME S3	REV 00

Transfer Case, Fill and Drain Plugs

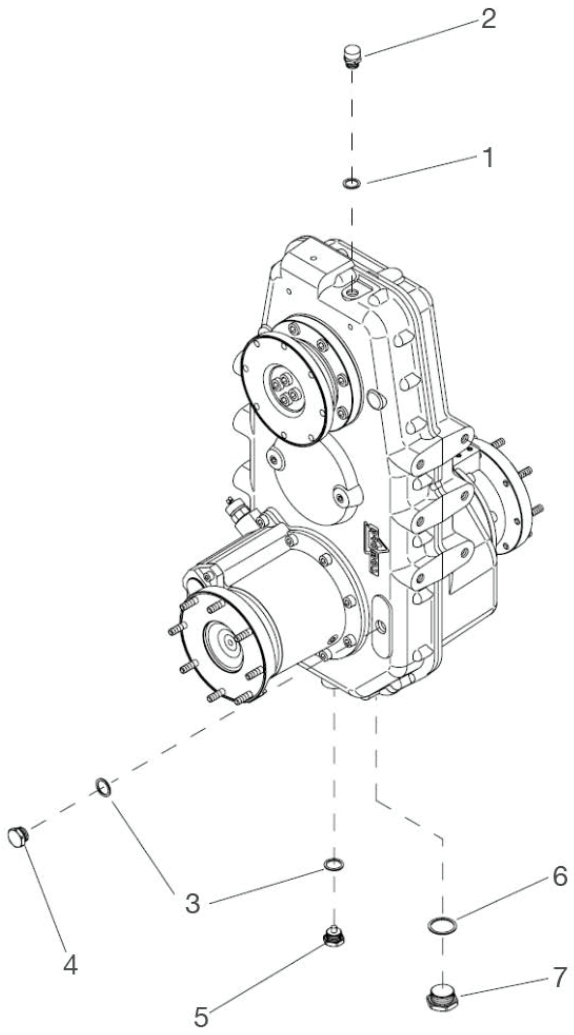

IF DESCRIPTION PREFIX IS ASSEMBLY DRAWING ONLY OR PRODUCTION DRAWING ONLY THE ITEM IS NOT FOR SALE			
1	GA5073430	WASHER, COPPER GASKET, 18 X 24 X 1.5 mm, DROMOS	1
2	GA5026140	PLUG, BREATHER, DROMOS	1
3	GA5073435	WASHER, COPPER GASKET, 22 X 28 X 1.5 mm, DROMOS	2
4	GA5078486	FILL PLUG, M22 X 1.5, DROMOS	1
5	GA5073445	PLUG, DRAIN, MAGNETIC, M22 X 1.5, DROP LEG, REAR, DROMOS	1
6	GA5073090	GASKET, LARGE OIL DRAIN PLUG, TRANSFER CASE, G8, DROMOS	1
7	GA5073075	PLUG, DRAIN, TRANSFER CASE, DROMOS	1
GA2700013 GOLDACRES		TRANSFER CASE. DIFFERENTIAL WITH LOCK, 1.42308:1 RATIO, DROMOS	REV 00

Transfer Case, Dromos, Upper Drive Assembly

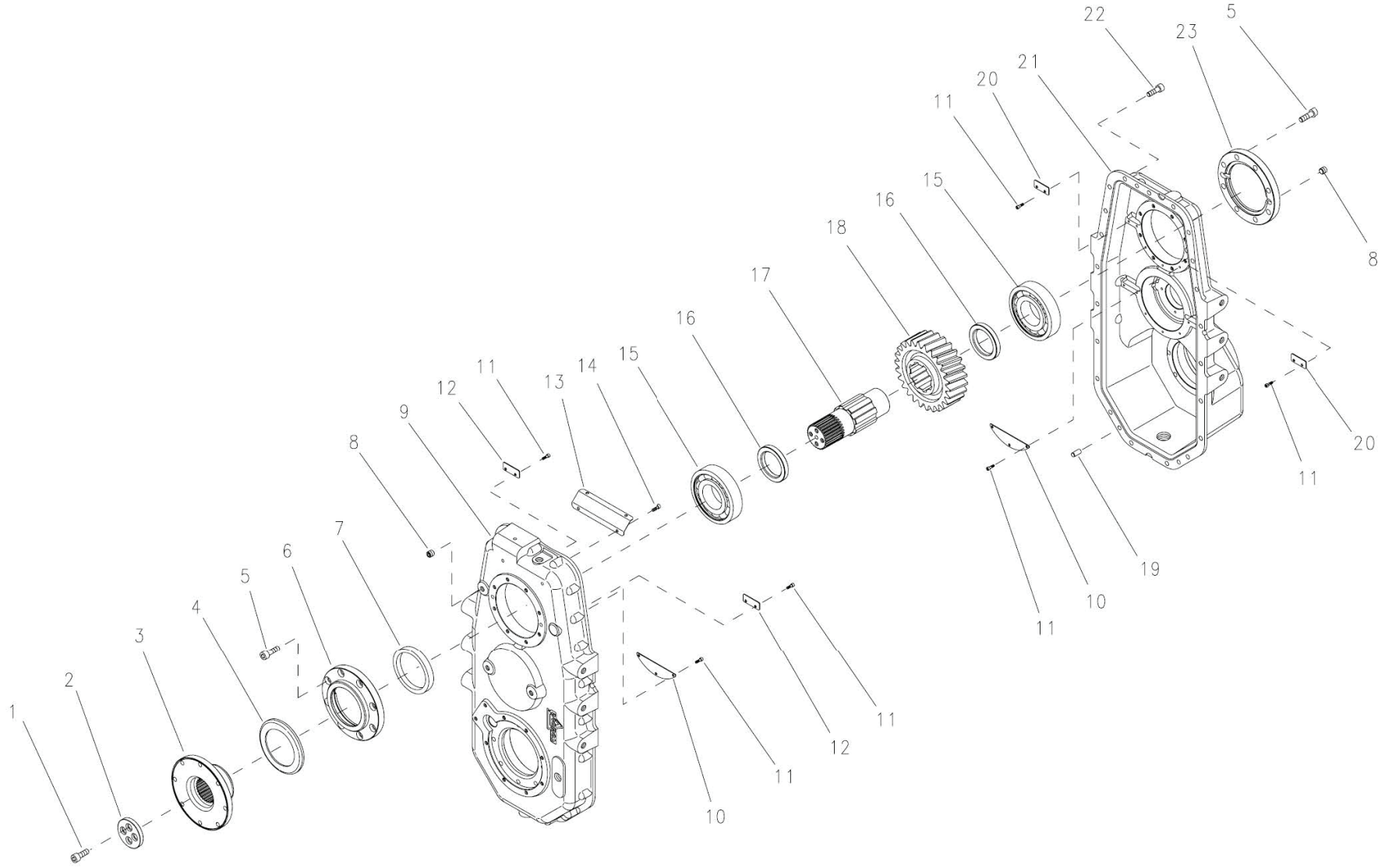

GA2700013	TRANSFER CASE. DIFFERENTIAL WITH LOCK, 1.42308:1 RATIO, DROMOS	REV 00

Transfer Case, Dromos, Upper Drive Assembly, Parts List

IF DESCRIPTION PREFIX IS ASSEMBLY DRAWING ONLY OR PRODUCTION DRAWING ONLY THE ITEM IS NOT FOR SALE			
ITEM	PART NUMBER	DESCRIPTION	QTY
1	GA5078846	HEXAGON SOCKET HEAD CAP SCREW M12X30 UNI 5931 12.9 REF.: -, DROMOS	4
2	GA5073220	LOCK WASHER, INPUT SHAFT FLANGE,	1
3	GA5078847	TRANSMISSION FLANGE, SUIT, DROMOS, TRANSFER CASE	1
4	GA5073205	OIL SEAL PROTECTION, INPUT SHAFT, TRANSFER CASE, DROMOS	1
5	GA5000313	SHCS M12 X 35 GR12.9 ZP	16
6	GA5073135	RING SUPPORT COVER, INPUT SHAFT BEARING, TRANSFER CASE, DROMOS	1
7	GA5073030	SEAL, OIL, INPUT SHAFT, TRANSFER CASE, DROMOS	1
8	GA5073065	PLUG, GRUB SCREW, TRANSFER CASE, DROMOS	2
9	GA5026141	CASING, TRANSFER CASE, DROMOS, SUIT, GA2700013	1
10	GA5073110	OIL LEVEL PLATE, INPUT SHAFT BEARINGS, TRANSFER CASE, DROMOS	2
11	GA5026142	SHCS M5X14 UNO 5931	14
12	GA5073115	OIL LEVEL PLATE, A, SMALL, TRANSFER CASE, G8, DROMOS	2

IF DESCRIPTION PREFIX IS ASSEMBLY DRAWING ONLY OR PRODUCTION DRAWING ONLY THE ITEM IS NOT FOR SALE			
ITEM	PART NUMBER	DESCRIPTION	QTY
13	GA5026143	PROTECTOR, OIL SHAKE, TRANSFER CASE, DROMOS, SUIT, GA2700013	1
14	GA5026144	SHCS M6X10 UNI 5931 GR12.9	1
15	GA5073000	BEARING, INPUT SHAFT, TRANSFER CASE, G8, DROMOS	2
16	GA5073190	SPACER, INPUT SHAFT, TRANSFER CASE, G8, DROMOS	2
17	GA5073155	DRIVE INPUT SHAFT, TRANSFER CASE, G8, DROMOS	1
18	GA5073145	GEARWHEEL, INPUT SHAFT, TRANSFER CASE, G8, DROMOS	1
19	GA5026145	PARALLEL PIN A, 10X20 UNI EN ISO 8734	3
20	GA5073120	OIL LEVEL PLATE, B, SMALL, TRANSFER CASE, G8, DROMOS	2
21	GA5026146	COVER, TRANSFER CASE, DROMOS, SUIT, GA2700013	1
22	GA5056265	CAP SCREW, SOCKET HEAD, HEXAGON, M10X30 UNI 5931 12.9, DROMOS	21
23	GA5073130	COVER, INPUT SHAFT BEARING, TRANSFER CASE, G8, DROMOS	1

GA2700013 GOLDACRES	TRANSFER CASE. DIFFERENTIAL WITH LOCK, 1.42308:1 RATIO, DROMOS	REV 00

Transfer Case, Differential Assembly

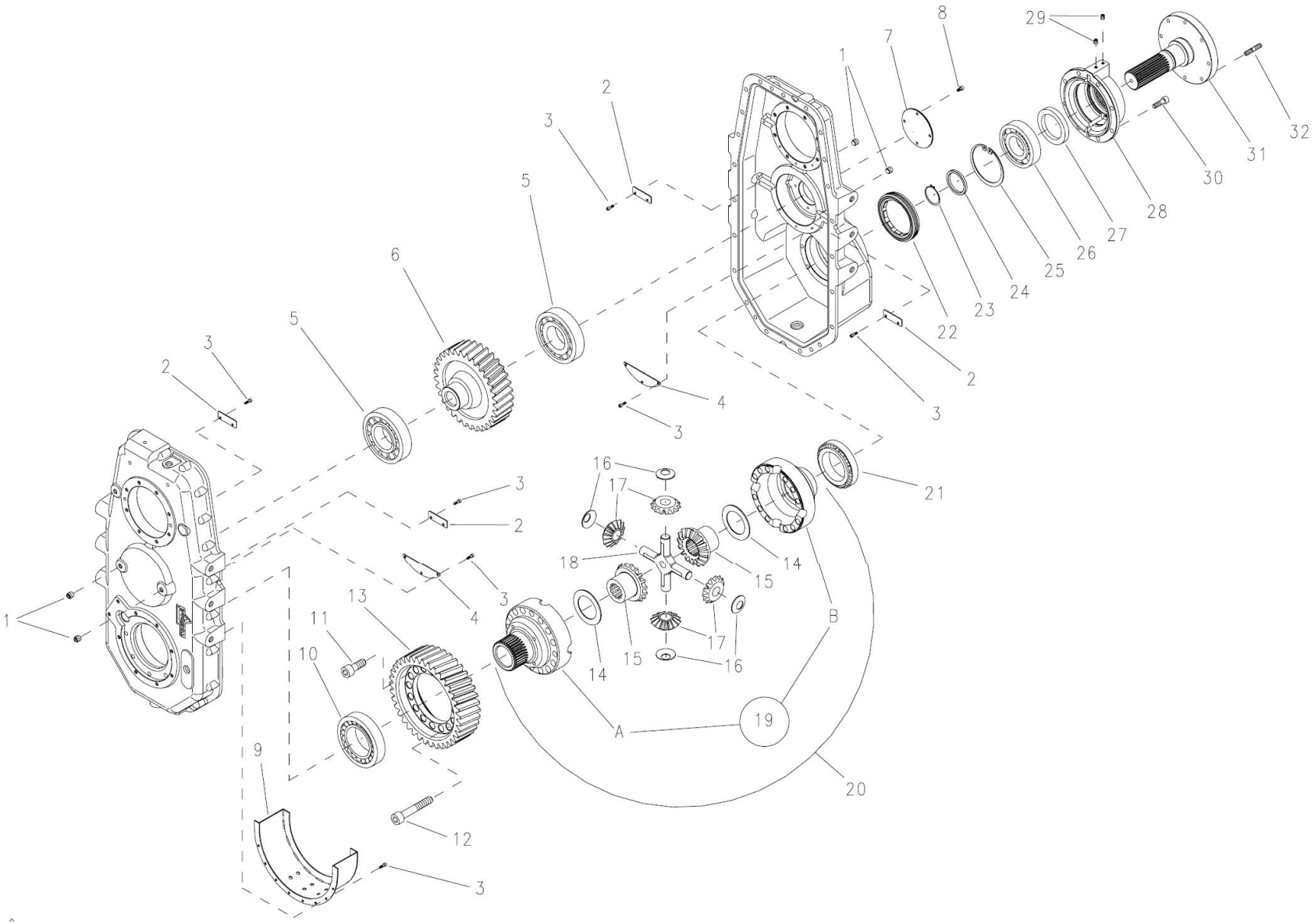

GA2700013	TRANSFER CASE. DIFFERENTIAL WITH LOCK, 1.42308:1 RATIO, DROMOS	REV 00

Transfer Case, Differential Assembly, Parts List

IF DESCRIPTION PREFIX IS ASSEMBLY DRAWING ONLY OR PRODUCTION DRAWING ONLY THE ITEM IS NOT FOR SALE			
ITEM	PART NUMBER	DESCRIPTION	QTY
1	GA5073065	PLUG, GRUB SCREW, TRANSFER CASE, G8, DROMOS	4
2	GA5026147	PLATE, OIL LEVEL, TRANSFER CASE, DROMOS	4
3	GA5026148	SHCS M5X14 UNI 5931 GR12.9	22
4	GA5073110	OIL LEVEL PLATE, INPUT SHAFT BEARINGS, TRANSFER CASE, G8, DROMOS	2
5	GA5073005	BEARING, IDLER SHAFT, TRANSFER CASE, G8, DROMOS	2
6	GA5073150	SHAFT WITH GEARWHEEL, IDLER, TRANSFER CASE, G8, DROMOS	1
7	GA5026149	PLATE, COVER, SUIT, TRANSFER CASE, DROMOS	1
8	GA5026144	SHCS M6X10 UNI 5931 GR12.9	4
9	GA5026151	COVER, PROTECTOR, OIL SHAKE, DROMOS,TRANSFER CASE, SUIT, GA2700013	1
10	GA5073015	BEARING, DIFFERENTIAL, FRONT, TRANSFER CASE, G8, DROMOS	1
11	GA5078869	HEXAGON SOCKET HEAD CAP SCREW M16X45 GR12.9	4
12	GA0500017	SHCS M16 X 100 GR12.9 ZP	12
13	GA5078848	GEARWHEEL, SUIT, DROMOS, TRANSFER CASE	1
14	GA5079100	SUPPORT RING, CROWN WHEEL, DROMOS	2
15	GA5079086	BEVEL, PLANETARY GEAR, DROMOS	2
16	GA5079091	SUPPORT RING, PLANETARY, DIFFERENTIAL, DROMOS	4

IF DESCRIPTION PREFIX IS ASSEMBLY DRAWING ONLY OR PRODUCTION DRAWING ONLY THE ITEM IS NOT FOR SALE			
ITEM	PART NUMBER	DESCRIPTION	QTY
17	GA5079101	PLANETARY GEAR, SUIT, DROMOS, DIFFERENTIAL	4
18	GA5079102	CROSS, SPIDER GEAR, SUIT, DROMOS, DIFFERENTIAL	1
19	GA5026152	DIFFERENTIAL, TRANSFER CASE, DROMOS, SUIT, GA2700013	1
20	GA5073230	DIFFERENTIAL UNIT, TRANSFER CASE, G8, DROMOS	1
21	GA5073010	BEARING, DIFFERENTIAL, REAR, TRANSFER CASE, G8, DROMOS	1
22	GA5078489	RING NUT, DROMOS DIFF, G4 ADJUSTABLE AXLE	1
23	GA5026150	RETAINING RING, E 50, UNI 7435	1
24	GA5073195	SPACER, OUTPUT SHAFT, TRANSFER CASE, G8, DROMOS	1
25	GA5073050	CIRCLIP, RETAINING RING, OUTPUT SHAFT, TRANSFER CASE, G8, DROMOS	1
26	GA5072995	BEARING, REAR OUTPUT SHAFT, TRANSFER CASE, G8, DROMOS	1
27	GA5073035	SEAL, OIL, OUTPUT SHAFT, TRANSFER CASE, G8, DROMOS	1
28	GA5026153	COVER, BEARING ASSEMBLY, TRANSFER CASE, DROMOS, SUIT, GA2700013	1
29	GA5026154	SHCS, HEADLESS, M8X10 UNI 5923 45 H	2
30	GA5056265	CAP SCREW, SOCKET HEAD, HEXAGON, M10X30 UNI 5931 12.9, DROMOS	8
31	GA5073140	TRANSMISSION FLANGE, REAR OUTPUT SHAFT, TRANSFER CASE, G8, DROMOS	1
32	GA5073210	STUD BOLT, OUTPUT SHAFT FLANGES, 3/8" UNF, TRANSFER CASE, G8, DROMOS	8

GA2700013	TRANSFER CASE. DIFFERENTIAL WITH LOCK, 1.42308:1 RATIO, DROMOS	REV 00
GOLDACRES		

Transfer Case, Dromos, Disengagement Casing Assembly

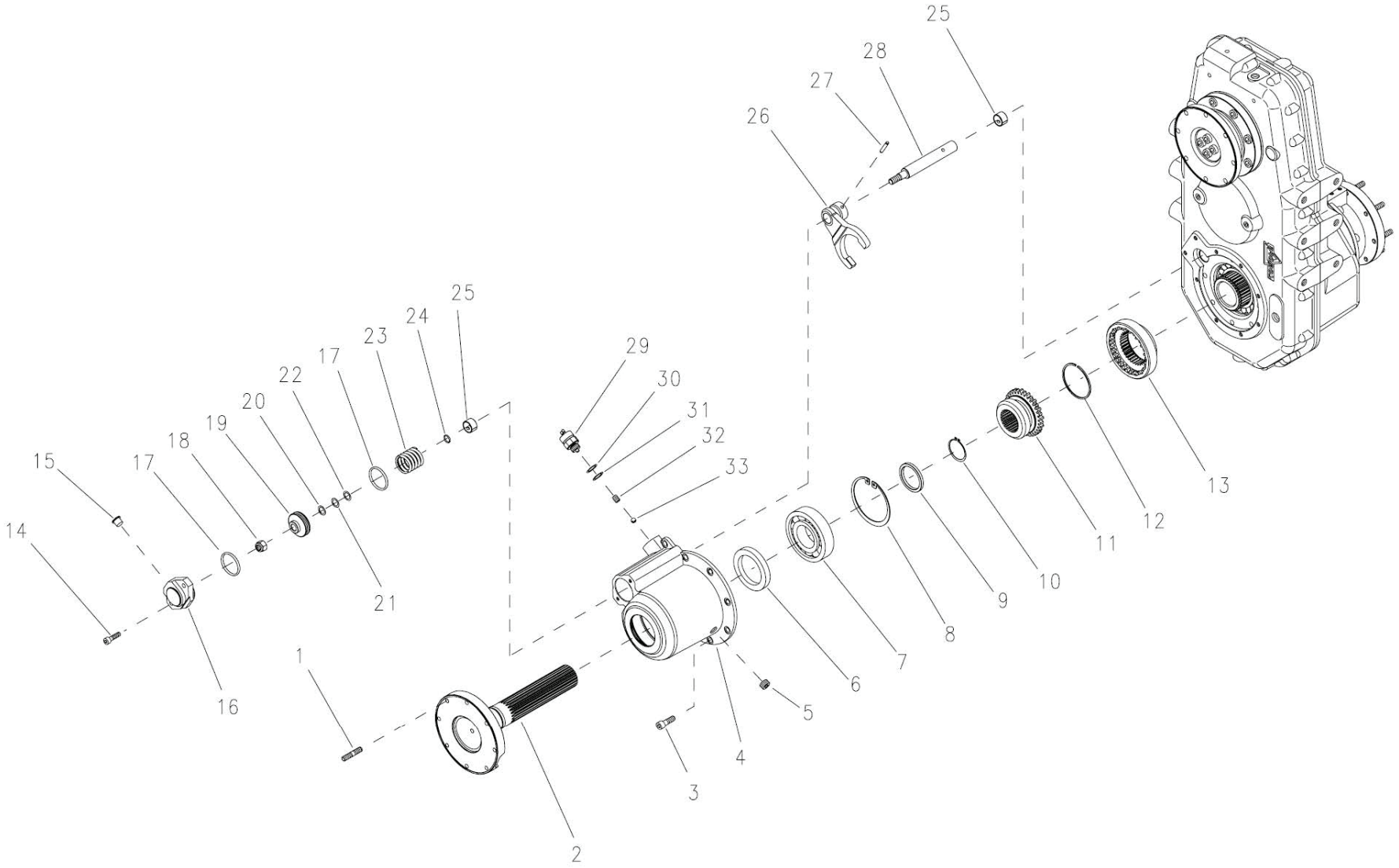

GA2700013 GOLDACRES	TRANSFER CASE. DIFFERENTIAL WITH LOCK, 1.42308:1 RATIO, DROMOS	REV 00

Transfer Case, Dromos, Disengagement Casing Assembly, Parts List

IF DESCRIPTION PREFIX IS ASSEMBLY DRAWING ONLY OR PRODUCTION DRAWING ONLY THE ITEM IS NOT FOR SALE			
ITEM	PART NUMBER	DESCRIPTION	QTY
1	GA5073210	STUD BOLT, OUTPUT SHAFT FLANGES, 3/8" UNF, TRANSFER CASE, G8, DROMOS	8
2	GA5078849	TRANSMISSION FLANGE, SUIT, DROMOS, TRANSFER CASE	1
3	GA5056265	CAP SCREW, SOCKET HEAD, HEXAGON, M10X30 UNI 5931 12.9, DROMOS	9
4	GA5026155	DISENGAGEMENT CASING, TRANSFER CASE, DROMOS, SUIT, GA2700013	1
5	GA5026156	PLUG, CONICAL, M18X1.5, DIN 906 5.8	1
6	GA5073035	SEAL, OIL, OUTPUT SHAFT, TRANSFER CASE, G8, DROMOS	1
7	GA5072995	BEARING, REAR OUTPUT SHAFT, TRANSFER CASE, G8, DROMOS	1
8	GA5073050	CIRCLIP, RETAINING RING, OUTPUT SHAFT, TRANSFER CASE, G8, DROMOS	1
9	GA5073195	SPACER, OUTPUT SHAFT, TRANSFER CASE, G8, DROMOS	1
10	GA5026150	RETAINING RING, E 50, UNI 7435	1
11	GA5026157	CLUTCH SLEEVE, DROMOS, SUIT, TRANSFER CASE, GA2700013	1
12	GA5026158	RING, SHOULDER, TORRINGTON, DROMOS, SUIT, TRANSFER CASE, GA2700013	1
13	GA5026159	CLUTCH RING, DROMOS, SUIT, TRANSFER CASE, GA2700013	1
14	GA5070765	SHCS M8 X 30 GR12.9 ZP	2
15	GA5026160	PLUG, DROMOS, SUIT, TRANSFER CASE	1
16	GA5026161	COVER, DISENGAGEMENT CASING, DROMOS, SUIT, TRANSFER CASE, GA2700013	1
17	GA5073040	O-RING, LARGE, DIFFERENTIAL LOCK, TRANSFER CASE, G8, DROMOS	2

IF DESCRIPTION PREFIX IS ASSEMBLY DRAWING ONLY OR PRODUCTION DRAWING ONLY THE ITEM IS NOT FOR SALE			
ITEM	PART NUMBER	DESCRIPTION	QTY
18	GA5000141	NUT M10 NYLOC ZP	1
19	GA5073125	PISTON, DIFFERENTIONAL LOCK, TRANSFER CASE, G8, DROMOS	1
20	GA5073180	SHIM, DIFFERENTIONAL LOCK PISTON, B, TRANSFER CASE, G8, DROMOS	2
21	GA5073185	SHIM, DIFFERENTIONAL LOCK PISTON, C, TRANSFER CASE, G8, DROMOS	4
22	GA5073165	SHIM, DIFFERENTIONAL LOCK PISTON, A, TRANSFER CASE, G8, DROMOS	2
23	GA5073225	SPRING, DIFFERENTIONAL LOCK PISTON, TRANSFER CASE, G8, DROMOS	1
24	GA5056405	O-RING 2-015 - 14,00X1,78, NBR 70, PARKER, SUIT, REAR AXLE, DROMOS	1
25	GA5073025	BUSHING, DIFFERENTIAL LOCK, TRANSFER CASE, G8, DROMOS	2
26	GA5073200	FORK, DIFFERENTIONAL LOCK, TRANSFER CASE, G8, DROMOS	1
27	GA5073060	SPRING FORK, DIFFERENTIAL LOCK, TRANSFER CASE, G8, DROMOS	1
28	GA5073160	FORK ROD, DIFFERENTIONAL LOCK, TRANSFER CASE, G8, DROMOS	1
29	GA5073100	SWITCH, DIFFERENTIONAL LOCK SENSOR, TRANSFER CASE, G8, DROMOS	1
30	GA5073175	SHIM, DIFFERENTIONAL LOCK SENSOR, B, TRANSFER CASE, G8, DROMOS	5
31	GA5073170	SHIM, DIFFERENTIONAL LOCK SENSOR, A, TRANSFER CASE, G8, DROMOS	5
32	GA5073105	PIN, DIFFERENTIONAL LOCK SENSOR, TRANSFER CASE, G8, DROMOS	1
33	GA5056425	BALL DIAM. 3/8", 9,525, G40 - AISI52100, TRIDELLA, DROMOS	1

GA2700013 GOLDACRES	TRANSFER CASE. DIFFERENTIAL WITH LOCK, 1.42308:1 RATIO, DROMOS	REV 00

Differential Centre Assembly, Front, 4WD, Parts Breakdown

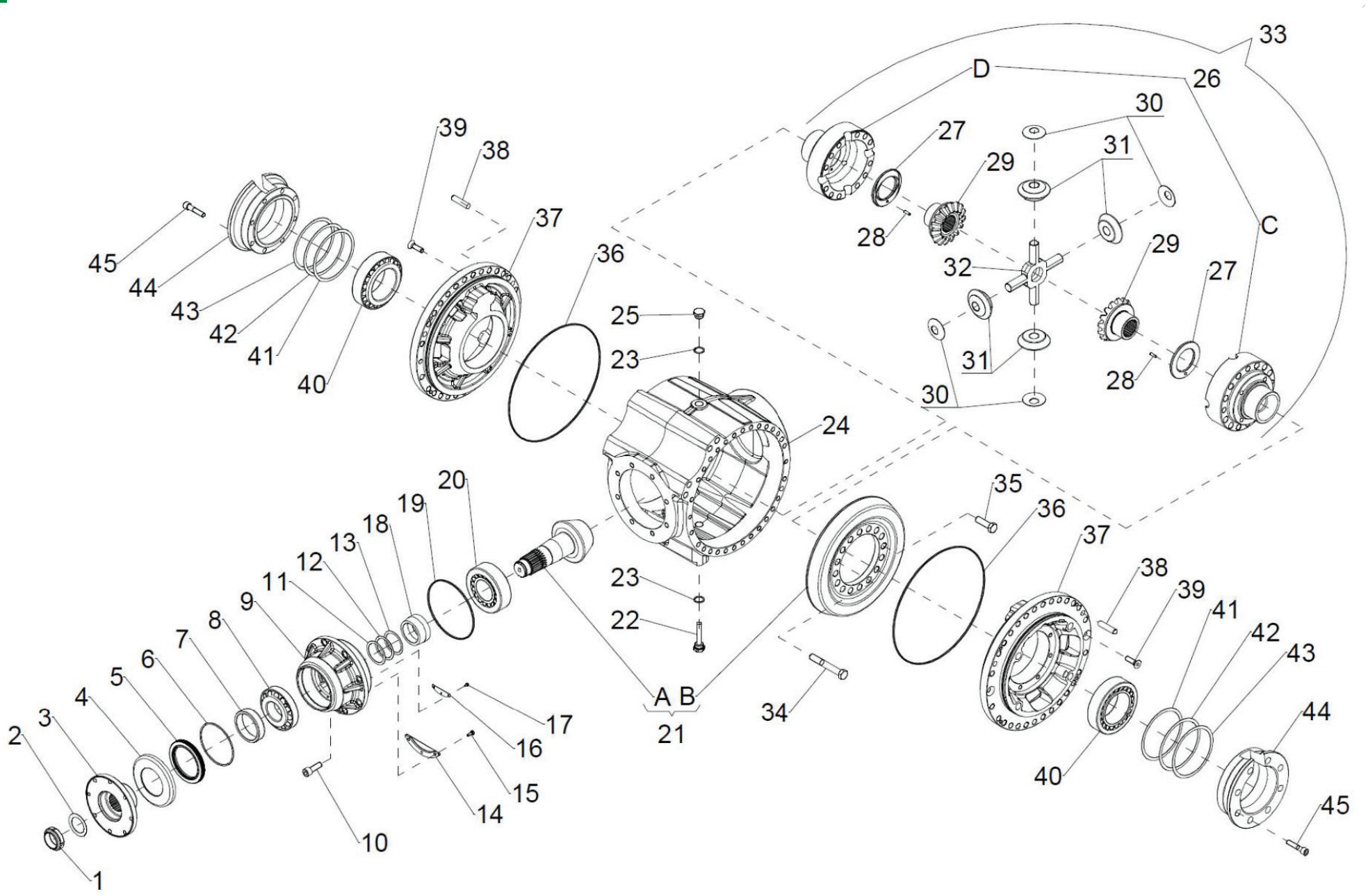

GA5026660 GOLDACRES	DIFF CENTRE, FRONT AXLE, DROMOS, SERIES 3, G6-G8, SUIT, GA2700185	REV 2

Differential Centre Assembly, Front, 4WD, Parts List

IF DESCRIPTION PREFIX IS ASSEMBLY DRAWING ONLY OR PRODUCTION DRAWING ONLY THE ITEM IS NOT FOR SALE			
ITEM	PART NUMBER	DESCRIPTION	QTY
1	GA5026595	NUT, RING, DROMOS, SUIT, DIFF CENTRE, GA4909714	1
2	GA5056070	THRUST WASHER, 45X65X1 COD. AS4565, TORRINGTON, DROMOS	1
3	GA5056075	TRANSMISSION FLANGE, DIFFERENTIAL, DROMOS	1
4	GA5056080	OIL SEAL PROTECTOR, DIFFERENTIAL, DROMOS	1
5	GA5072790	OIL SEAL BAUM6SLX7 90X120X12 FKM REF.: SIMRIT	1
6	GA5056085	SHOULDER RING, BR 120, TORRINGTON, DROMOS	1
7	GA5072945	OIL SEAL RING RACE, DIFF INPUT, AXLE, DROMOS	1
8	GA5026596	BEARING, SUPPORT BUSH, DIFFERENTIAL, DROMOS	1
9	GA5026596	BEARING SUPPORT BUSH, DIFFERENTIAL, DROMOS,	1
10	GA5056090	CAP SCREW, SOCKET HEAD, HEXAGON, M14X40 UNI 5931 12.9, DROMOS	8
11	GA5056110	SHIM, 55X68X0.15, DIFFERENTIAL, DROMOS	1
12	GA5056105	SHIM, 55X68X0.20, DIFFERENTIAL, DROMOS	1
13	GA5056100	SHIM, 55X68X0.30, DIFFERENTIAL, DROMOS	1
14	GA5026597	PLATE, OIL LEVEL, DIFFERENTIAL, DROMOS	1
15	GA5004041	SET SCREW M6 X 16 GR8.8 ZP	3
16	GA5026598	OIL GUTTER, DIFFERENTIAL, DROMOS	1
17	GA0500233	SET SCREW, M4 X 8, GR12.9	3
18	GA5056115	SPACER, PINION, DIFFERENTIAL, DROMOS	1
19	GA5056340	O-RING, 2-260 - 164,69X3,53, NBR 70, PARKER, DROMOS	1
20	GA5056345	TAPERED BEARING, 32312 C, NTN, DROMOS	1
21	GA5026664	BEVEL GEAR & PINION, FRONT DIFFERENTIAL, SUIT, GA5026660	1
22	GA5056130	MAGENETIC DRAIN PLUG, WITH ROD, M22X1.5-75 COD. FMC4M, MINTOR, DROMOS	1
23	GA5073435	WASHER, COPPER GASKET, 22 X 28 X 1.5 mm, DROMOS	2

IF DESCRIPTION PREFIX IS ASSEMBLY DRAWING ONLY OR PRODUCTION DRAWING ONLY THE ITEM IS NOT FOR SALE			
ITEM	PART NUMBER	DESCRIPTION	QTY
24	GA5026600	CASING, CENTRAL, DIFFERENTIAL, DROMOS	1
25	GA5078486	FILL PLUG, M22 X 1.5, DROMOS	1
26	GA5056135	DIFFERENTIAL UNIT, HALF-CARTER GROUP, DROMOS	1
27	GA5056140	SUPPORT RING, DIFFERENTIAL, CROWN WHEEL, DROMOS	2
28	GA5056145	PARALLEL PIN A, 6X20 UNI EN ISO, 8734, DROMOS	2
29	GA5056150	PLANETARY GEAR, BEVELLED, DROMOS	2
30	GA5056155	SUPPORT RING, PLANETARY, DIFFERENTIAL, DROMOS	4
31	GA5056160	PLANETARY GEAR, BEVELLED, DROMOS	4
32	GA5056165	CROSS, CENTRAL, SPIDER GEAR, DROMOS	1
33	GA5026665	DIFFERENTIAL UNIT, FRONT AXLE, DROMOS, SUIT, GA5026660	1
34	GA5056170	CAP SCREW, HEXAGONAL HEAD, M16X1.5X110, UNI 5738 10.9, DROMOS	12
35	GA5056175	CAP SCREW, HEXAGONAL HEAD, M16X1.5X50 UNI 5740 10.9, DROMOS	4
36	GA5026609	O-RING, DIFFERENTIAL SUPPORT, DROMOS	2
37	GA5026610	DIFFERENTIAL SUPPORT, CENTRE, DROMOS	2
38	GA5026611	PIN, PARALLEL, DIFFERENTIAL, DROMOS	2
39	GA5056185	CAP SCREW, HEXAGON SOCKET, FLAT HEAD, M12X40, UNI 5933 10.9, DROMOS	4
40	GA5026613	BEARING, DIFFERENTIAL, AXLE SUPPORT, DROMOS	2
41	GA5056205	SHIM, 133,4X149,7X0,30, DIFFERENTIAL, DROMOS	2
42	GA5056200	SHIM, 133,4X149,7X0,20, DIFFERENTIAL, DROMOS	4
43	GA5056195	SHIM, 133,4X149,7X0,15, DIFFERENTIAL, DROMOS	4
44	GA5056210	ADJUSTMENT SPACER, DIFFERENTIAL, DROMOS	2
45	GA5056215	HEXAGON SOCKET HEAD CAP SCREW, M12X55, UNI 5931 12.9, DROMOS	16

GA5026660 GOLDACRES	DIFF CENTRE, FRONT AXLE, DROMOS, SERIES 3, G6-G8, SUIT, GA2700185	REV 2

Differential Axle Assembly, 4WD, Front, Parts Breakdown

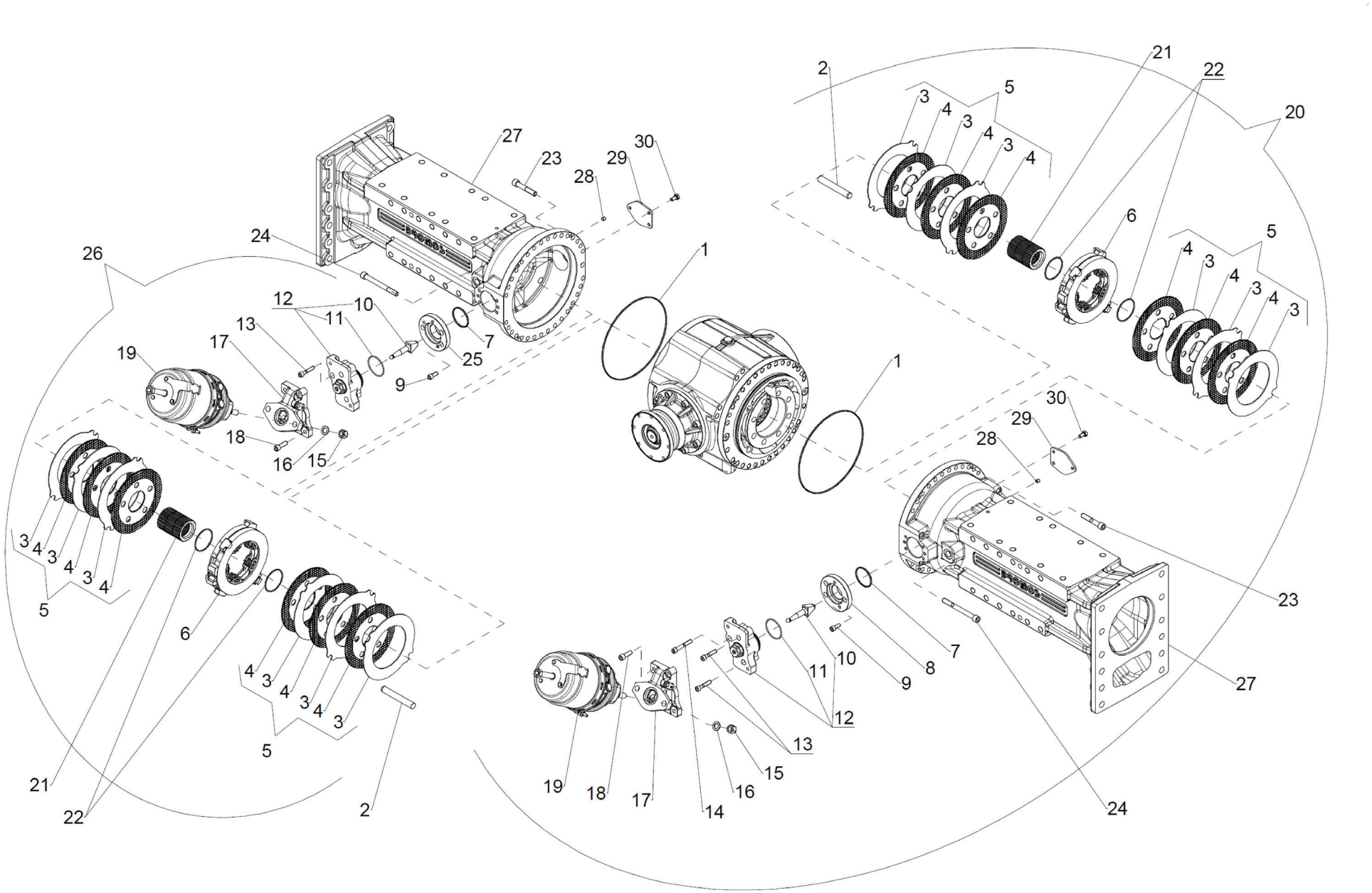

GA7800480	PARTS DRAWING ONLY, AXLE ASSEMBLY, FRONT 4WD, DROMOS	REV 2

Differential Axle Assembly, 4WD, Front, Parts List

IF DESCRIPTION PREFIX IS ASSEMBLY DRAWING ONLY OR PRODUCTION DRAWING ONLY THE ITEM IS NOT FOR SALE			
ITEM	PART NUMBER	DESCRIPTION	QTY
1	GA5056225	O-RING 2-275 - 266,29X33,53, NBR 70, PARKER, DROMOS	2
2	GA0500062	PARALLEL PIN A 20X140 UNI EN ISO 8734	8
3	GA5056230	DISC, INTERMEDIATE, BRAKE ASSY, AXLE, DROMOS	12
4	GA5056235	CLUTCH DISC, BRAKE ASSY, AXLE, DROMOS	12
5	GA5056240	KIT, BRAKE DISCS, DIFFERENTIAL, DROMOS	2
6	GA5056245	BRAKE CASING, DIFFERENTIAL, BRAKE ASSY, DROMOS	2
7	GA5026614	O-RING, ACTUATOR TO AXLE HOUSING, DROMOS	2
8	GA5026615	PLATE, RING, RH, ACTUATOR TO AXLE HOUSING, DROMOS	1
9	GA5026616	SCREW, ACTUATOR PLATE, AXLE, DROMOS	5
10	GA5026617	ADJUSTER BOLT, ACTUATOR, AXLE, DROMOS	2
11	GA5026618	O-RING, ACTUATION CYLINDER, DROMOS	2
12	GA5026619	CYLINDER, ACTUATION, BRAKE, FRONT AXLE, DROMOS	2
13	GA5049990	SHCS M10 X 50 GR 12.9 ZP	5
14	GA0500234	SHCS M10 X 70 GR12.9	1

IF DESCRIPTION PREFIX IS ASSEMBLY DRAWING ONLY OR PRODUCTION DRAWING ONLY THE ITEM IS NOT FOR SALE			
ITEM	PART NUMBER	DESCRIPTION	QTY
15	001.112.0090.0	LOCK NUT	4
16	001.120.0220.0	FLAT WASHER	4
17	GA5026620	CYLINDER, ACTUATION, BRAKE, DIFFERENTIAL, DROMOS	2
18	GA5022482	SHCS M10 X 35 GR 12.9 ZP	4
19	GA5026666	CYLINDER, PNEUMATIC, FRONT AXLE, DROMOS	2
20	GA5026667	KIT, DISC BRAKE, LH, ASSEMBLY, FRONT AXLE, DROMOS, SUIT, GA2700186	1
21	GA5056480	BRAKE SLEEVE, SUIT, DIFFERENTIAL, DROMOS	2
22	GA5056270	SHOULDER RING, WR 75, TORRINGTON, BRAKE ASSY, DROMOS	4
23	GA0500235	SHCS M14 X 80 GR12.9	48
24	GA0500236	SHCS M14 X 140 GR12.9	8
25	GA5026623	PLATE, RING, ACTUATOR TO AXLE HOUSING, DROMOS	1
26	GA5026668	KIT, DISC BRAKE, RH, ASSEMBLY, FRONT AXLE, DROMOS, SUIT, GA2700186	1
27	GA5026669	HOUSING, AXLE, SIDE BODY, DIFFERENTIAL, 4WD, DROMOS	2

GA7800480 GOLDACRES	PARTS DRAWING ONLY, AXLE ASSEMBLY, FRONT 4WD, DROMOS	REV 2

Axle, Airbag Bracket Mounting, 4WD, Front

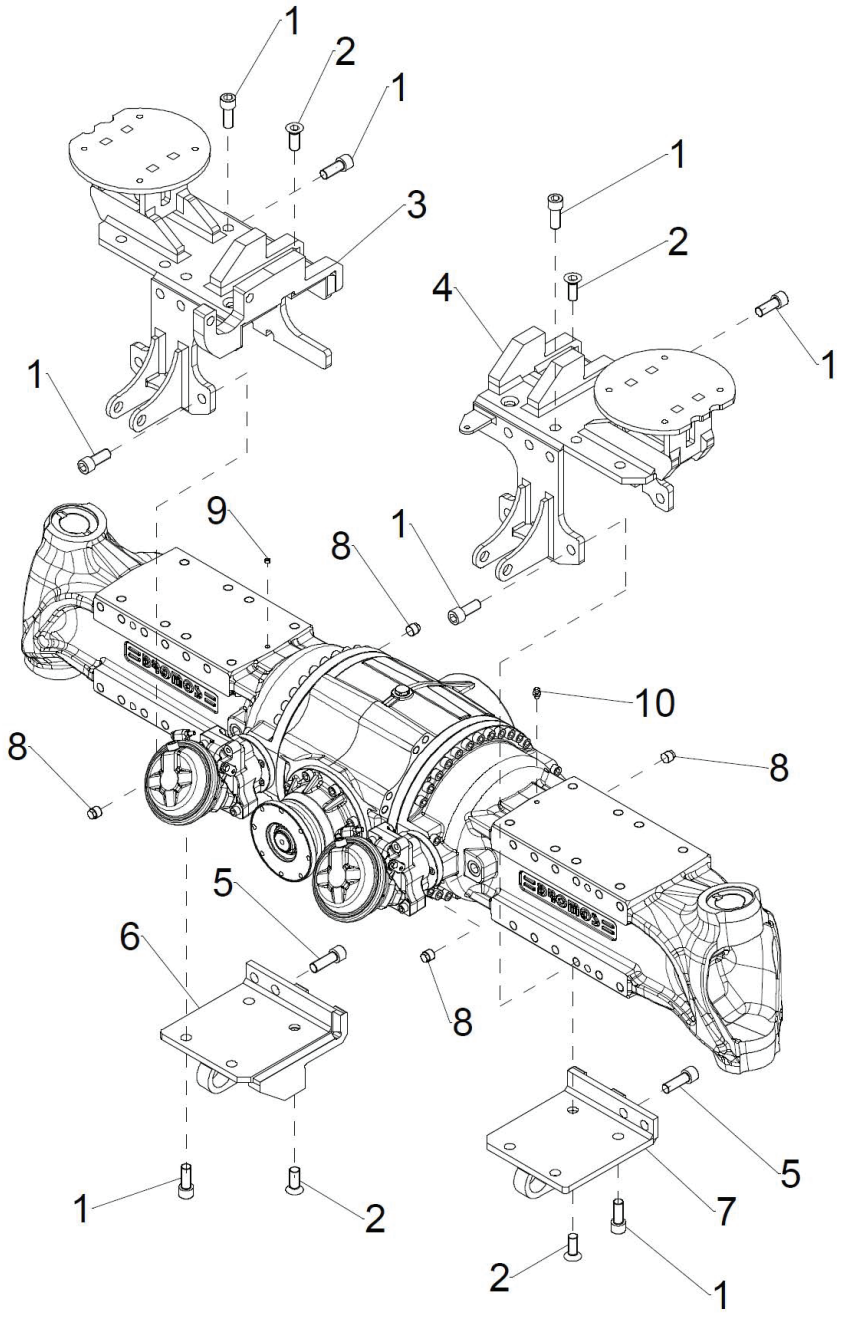

IF DESCRIPTION PREFIX IS ASSEMBLY DRAWING ONLY OR PRODUCTION DRAWING ONLY THE ITEM IS NOT FOR SALE			
ITEM	PART NUMBER	DESCRIPTION	QTY
1	GA0500028	SHCS, M20 X 50, ZP, GR12.9	34
2	GA0500237	SCREW, HEX HEAD, M20 X 50, COUNTERSUNK	32
3	GA5026670	BRACKET, AIRBAG MOUNT, RH, AXLE, FRONT 4WD, DROMOS, SUIT, GA2700186	1
4	GA5026671	BRACKET, AIRBAG MOUNT, LH, AXLE, FRONT 4WD, DROMOS, SUIT, GA2700186	1
5	GA5056330	SHCS, HEXAGON, M20X60, UNI 5931 12CAP SCREW, SOCKET HEAD, HEXAGON, M20X60, UNI 5931 12.9, DROMOS	4
6	GA5026630	BRACKET, BASE, AIRBAG, AXLE, RH, 4WD, DROMOS, SUIT, GA2700185 & GA2700186	1
7	GA5026629	BRACKET, BASE, AIRBAG, AXLE, LH, 4WD, DROMOS, SUIT, GA2700185 & GA2700186	1
8	GA5056295	CONICAL PLUG, HEXAGONAL HEAD, M22X1.5, DIN 909 5.8, DROMOS	4
9	GA5056220	CONICAL PLUG, HEXAGON SOCKET, HEAD CAP, M10X1, DIN 906 5.8, DROMOS	
10	GA5026631	PLUG, BREATHER, AXLE, DROMOS	1
GA7800481 GOLDACRES		PARTS DRAWING ONLY, AXLE, AIR-BAG BRACKET MOUNITNG, FRONT 4WD, DROMOS, SUIT, GA2700186	REV 00

Drive Shaft Assembly, Axle, Front 4WD

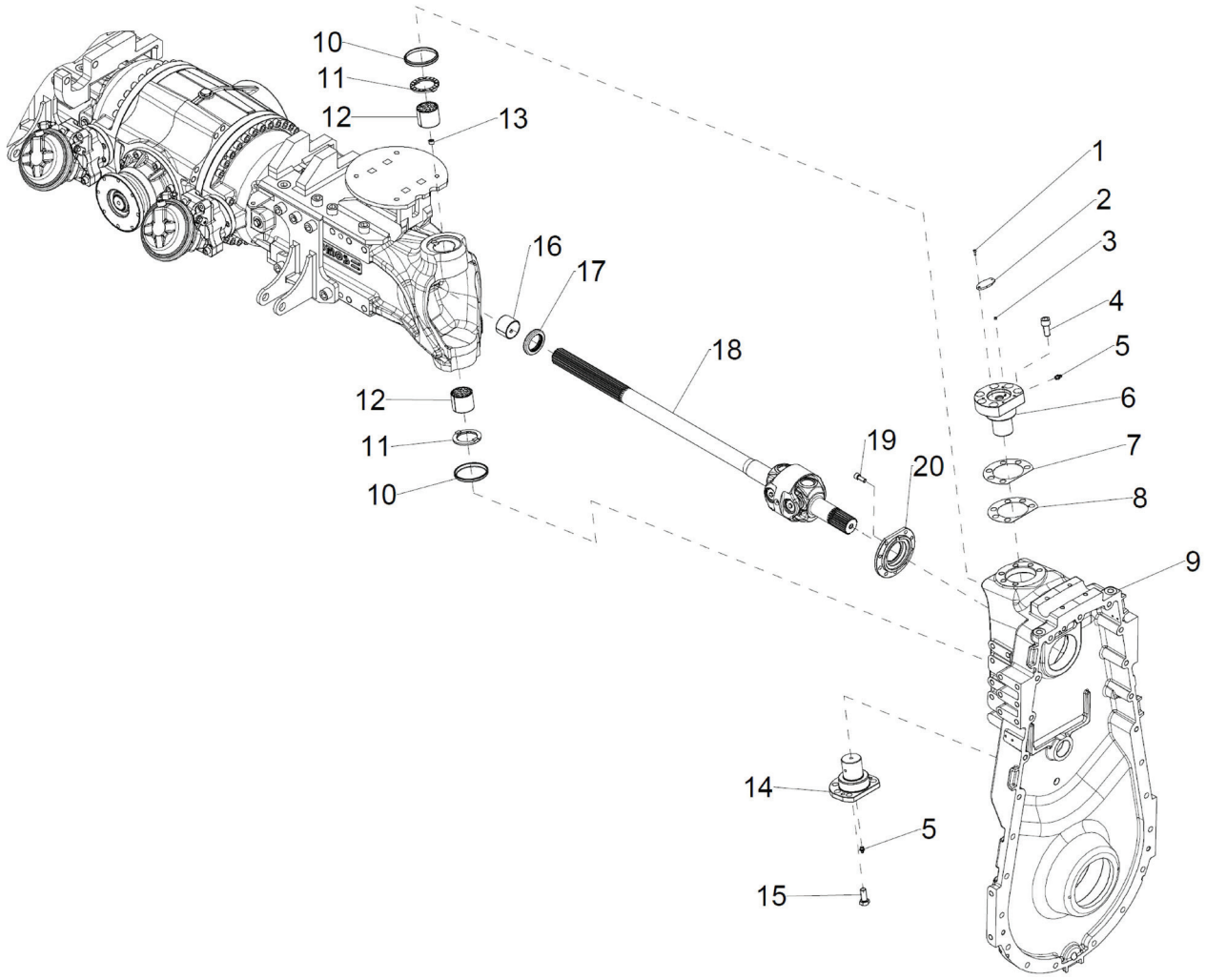

IF DESCRIPTION PREFIX IS ASSEMBLY DRAWING ONLY OR PRODUCTION DRAWING ONLY THE ITEM IS NOT FOR SALE			
ITEM	PART NUMBER	DESCRIPTION	QTY
1	GA5079165	SHCS, TCEI M4 X 12 UNI 5931 12.9	4
2	GA5026673	PLATE, COVER, ARTICULATION PIN, AXLE, FRONT 4WD, DROMOS, SUIT, GA2700186	2
3	GA0500238	GRUB SCREW, M6 X 8mm, UNI 5923 45H	2
4	GA5000935	SHCS M16 X 50 GR12.9 ZP	12
5	GA5072835	STRAIGHT LUBRICATOR M10X1 UNI 7663 MOD. A 5.8 (GREASE NIPPLE)	4
6	GA5026674	ARTICULATION PIN, UPPER, AXLE, FRONT 4WD, DROMOS, SUIT, GA2700186	2
7	GA5072925	SHIM B, ARTICULATION PIN, AXLE, G8, DROMOS	4
8	GA5072920	SHIM A, ARTICULATION PIN, AXLE, G8, DROMOS	10
9	GA5026675	COVER, INNER, DROP LEG, DROMOS, FRONT 4WD	1
10	GA5072820	WIPER RING AU AS 85X95X10/7 REF.: SIMRIT, ARTICULATION PIN, DROMOS	4
11	GA5026676	THRUST WASHER, ARTICULATION PIN, AXLE, FRONT 4WD, DROMOS	4
12	GA5026677	BUSHING, BEARING, SLIDING, AXLE, DROMOS	4
13	GA5026678	PLUG, HEX, M14 X 1.5, DROMOS	2
14	GA5026679	ARTICULATION PIN, LOWER, AXLE, FRONT 4WD, DROMOS, SUIT, GA2700186	2
15	001.090.1552.0	SCREW	12
16	GA1700022	BUSHING, BEARING, SLIDING, 50X55X40 C SB-20, AXLE, DROMOS	2
17	GA5026634	SEAL, OIL, DRIVESHAFT, AXLE, DROMOS	2
18	GA5026635	DRIVE SHAFT, WITH UNIVERSAL JOINT, AXLE, DROMOS, SUITS, GA2700185	2
19	GA5026616	SCREW, ACTUATOR PLATE, AXLE, DROMOS	18
20	GA5026636	RING, SUPPORT COVER, DRIVE SHAFT, AXLE, DROMOS	2
GA7800483 GOLDACRES		PARTS DRAWING ONLY, DRIVESHAFT, AXLE, FRONT 4WD, DROMOS, SUIT, GA2700186	REV 00

Drop Leg, Upper Drive Assembly, Front 4WD

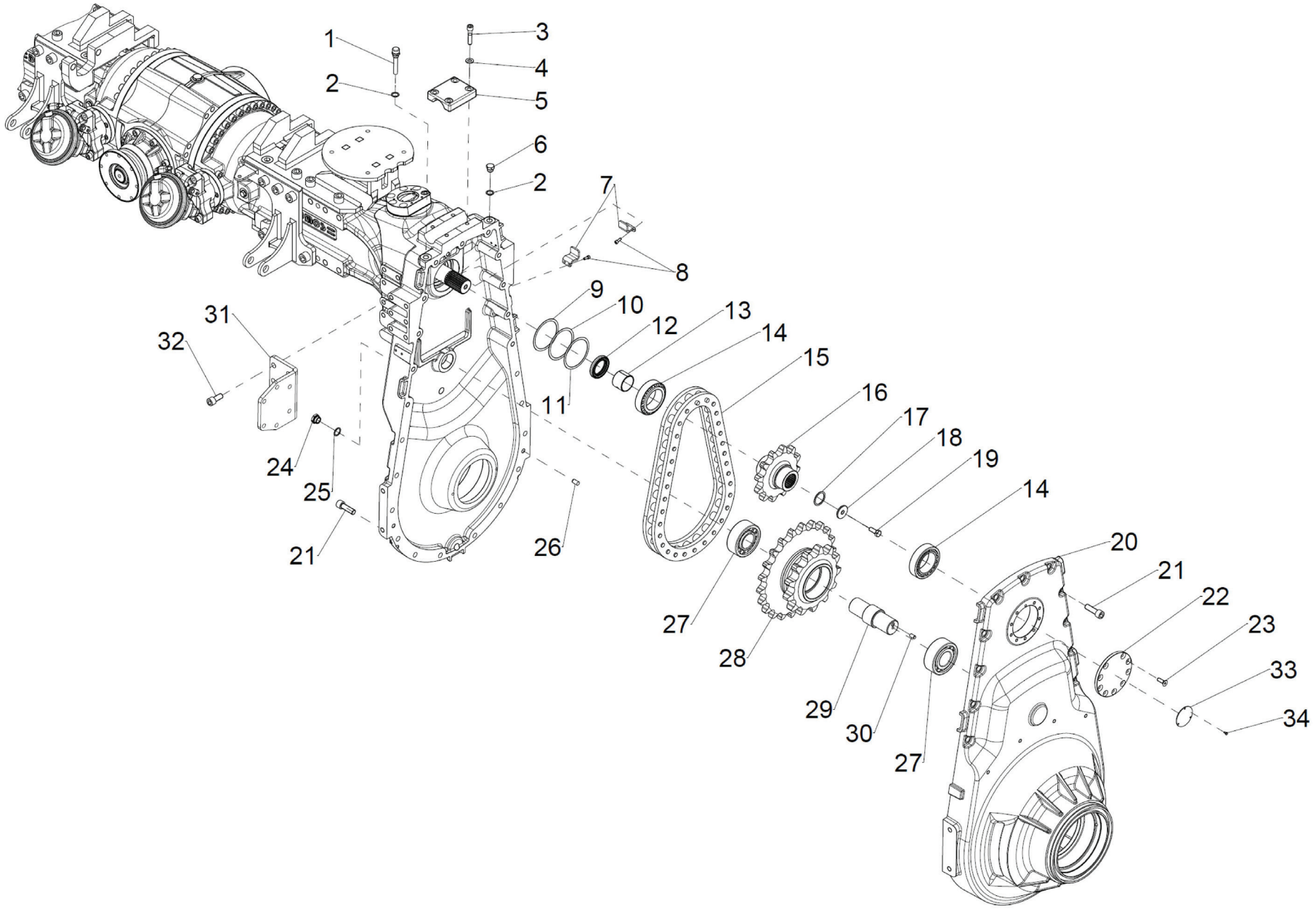

GA7800484	PARTS DRAWING ONLY, DROP LEG, UPPER DRIVE ASSEMBLY, FRONT 4WD	REV 00

Drop Leg, Upper Drive Assembly, Front 4WD, Parts List

IF DESCRIPTION PREFIX IS ASSEMBLY DRAWING ONLY OR PRODUCTION DRAWING ONLY THE ITEM IS NOT FOR SALE			
ITEM	PART NUMBER	DESCRIPTION	QTY
1	GA5073425	BREATHER PLUG WITHOUT VALVE WITH TUBE M18 X 1.5, DROP LEG, OIL, G5 G6, DROMOS	2
2	GA5073430	WASHER, COPPER GASKET, 18 X 24 X 1.5 mm, DROMOS	4
3	GA5056215	HEXAGON SOCKET HEAD CAP SCREW, M12X55, UNI 5931 12.9, DROMOS	8
4	GA5000577	WASHER M12 FLAT SS HD	8
5	GA5026638	PLATE, CLAMP, MUDGUARD PIPE, AXLE, DROMOS	2
6	GA5026639	PLUG, M18X1.5, HEX HEAD, DROMOS	2
7	GA5026640	BRACKET, PROTECTOR, OIL SHAKE, DROMOS	4
8	GA5004049	SHCS M6 X 16 GR12.9 ZP	
9	GA5026642	SHIM, 95,2X109,8X0,30, DROMOS	2
10	GA5026641	SHIM, 95,2X109,8X0,20, DROMOS	2
11	GA5026643	SHIM, 95,2X109,8X0,15, DROMOS	8
12	GA5026634	SEAL, OIL, DRIVESHAFT, AXLE, DROMOS	2
13	GA1700022	BUSHING, BEARING, SLIDING, 50X55X40 C SB-20, AXLE, DROMOS	2
14	GA5026715	BEARING, ROLLER, TAPERED, 70X110X31	4
15	GA5026645	CHAIN, ROLLER, DROP LEG, UPPER DRIVE, DROMOS	1
16	GA5026646	SPROCKET, SPLINED, DROP LEG, UPPER DRIVE, DROMOS	2
17	GA5056305	RETAINING RING, BRAKE ASSY, AXLE, I45, UNI 7437, DROMOS	2

IF DESCRIPTION PREFIX IS ASSEMBLY DRAWING ONLY OR PRODUCTION DRAWING ONLY THE ITEM IS NOT FOR SALE			
ITEM	PART NUMBER	DESCRIPTION	QTY
18	GA5026647	WASHER, LOCKING, 44X30X7, DROMOS	2
19	GA5065455	SET SCREW M10 X 30 GR8.8 ZP	2
20	GA5026648	COVER, OUTER, DROP LEG, CASING, DROMOS, 4WD	2
21	GA5048680	SHCS M16 X 60 GR12.9 ZP	46
22	N/A		
23	N/A		
24	GA5078486	FILL PLUG, M22 X 1.5, DROMOS	2
25	GA5073435	WASHER, COPPER GASKET, 22 X 28 X 1.5 mm, DROMOS	2
26	GA5073325	DOWEL PIN, M12 X 24, DROMOS	6
27	GA5026650	BEARING, DROP LEG, DROMOS.....	4
28	GA5026654	SPROCKET, DUAL, UPPER DRIVE, DROP LEG, DROMOS	2
29	GA5073385	IDLER SHAFT, DROP LEG, DROMOS	2
30	GA5026145	PARALLEL PIN A, 10X20 UNI EN ISO 8734	2
31	GA5026652	BRACKET, PIPE, MUDGUARD, CENTRE, DROP LEG, FRONT 4WD	2
32	GA5000935	SHCS M16 X 50 GR12.9 ZP	12
33	N/A		
34	N/A		

GA7800484	PARTS DRAWING ONLY, DROP LEG, UPPER DRIVE ASSEMBLY, FRONT 4WD	REV 00
GOLDACRES		

Drop Leg, Lower Drive Assembly, Front 4WD

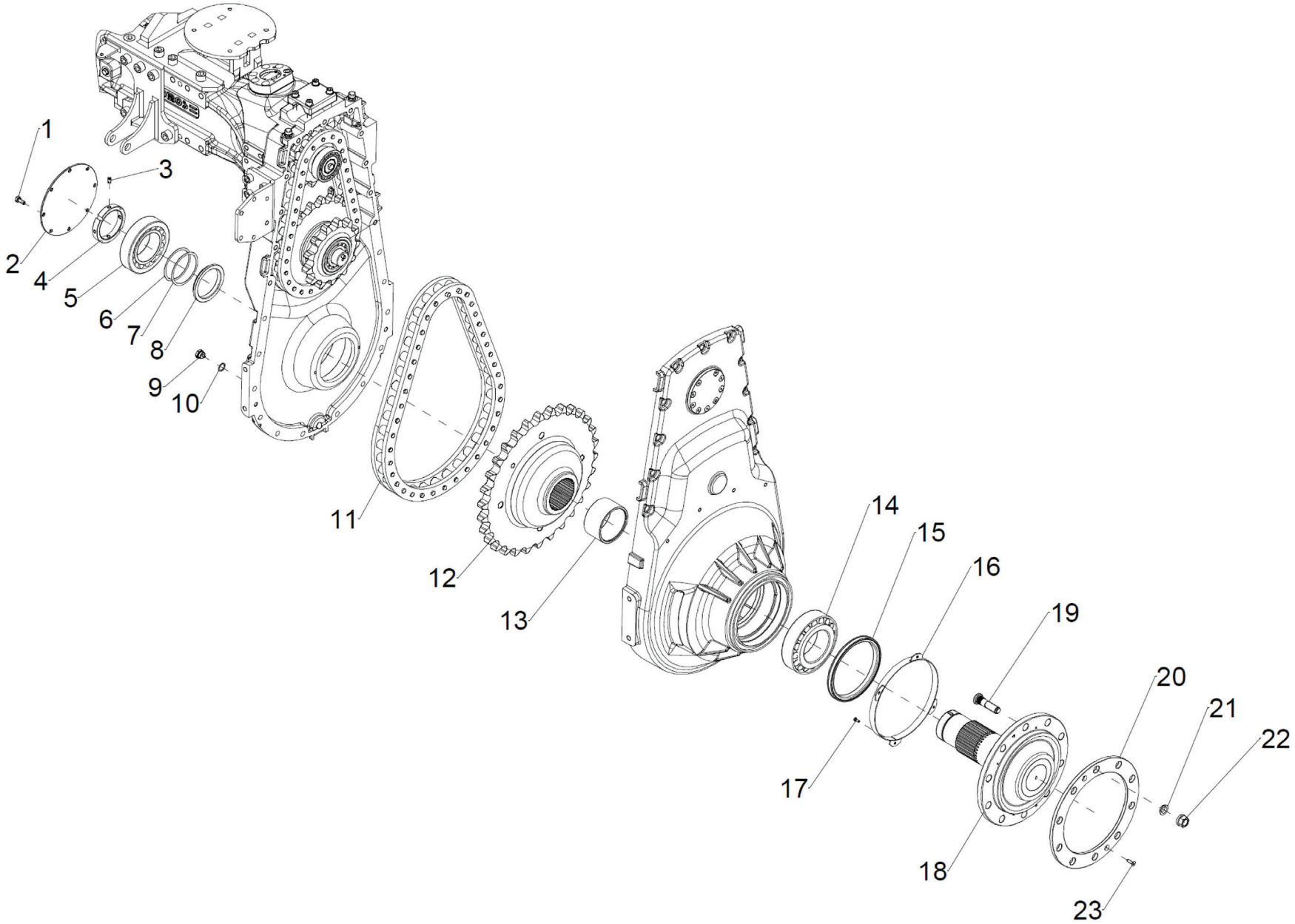

GA7800485 GOLDACRES	PARTS DRAWING ONLY, DROP LEG, LOWER DRIVE ASSEMBLY, FRONT 4WD, DROMOS, SUIT, GA2700185	REV 00

Drop Leg, Lower Drive Assembly, Front 4WD, Parts List

IF DESCRIPTION PREFIX IS ASSEMBLY DRAWING ONLY OR PRODUCTION DRAWING ONLY THE ITEM IS NOT FOR SALE			
ITEM	PART NUMBER	DESCRIPTION	QTY
1	GA5006161	SET SCREW M10 X 25 GR8.8 ZP	16
2	GA5073375	PLATE, COVER, OUTPUT SHAFT, DROP LEG, G5 G6, DROMOS	2
3	GA5073370	GRUB SCREW, M10 X 16, DROMOS	2
4	GA5073365	RING NUT, DROP LEG, DROMOS	2
5	GA5026655	BEARING, DROP LEG, LOWER DRIVE, INNER....	2
6	GA5073360	SHIM, OUTPUT SHAFT, 0.30mm, DROP LEG, DROMOS	4
7	GA5073350	SHIM, OUTPUT SHAFT, 0.15mm, DROP LEG, DROMOS	2
8	GA5073345	SPACER RING, SHORT, OUTPUT SHAFT, DROP LEG, DROMOS	2
9	GA5073445	PLUG, DRAIN, MAGNETIC, M22 X 1.5, DROP LEG, REAR, DROMOS	2
10	GA5073435	WASHER, COPPER GASKET, 22 X 28 X 1.5 mm, DROMOS	2
11	GA5026656	CHAIN, ROLLER, DROP LEG, LOWER DRIVE, FRONT 4WD, DROMOS	2
12	GA5026657	SPROCKET, SPLINED, DROP LEG, LOWER DRIVE, DROMOS	2

IF DESCRIPTION PREFIX IS ASSEMBLY DRAWING ONLY OR PRODUCTION DRAWING ONLY THE ITEM IS NOT FOR SALE			
ITEM	PART NUMBER	DESCRIPTION	QTY
13	GA5073330	SPACER RING, LONG, OUTPUT SHAFT, DROP LEG, DROMOS	2
14	GA5026658	BEARING, DROP LEG, OUTER LOWER DRIVE, DROMOS	2
15	GA5073295	SEAL, OIL, CASSETTE, T3 190X220X16/18 NBR, DROP LEG, DROMOS	2
16	GA5073285	OUTPUT SHAFT SEAL PROTECTION RING, DROP LEG, DROMOS	2
17	GA5073290	SHCS, M6 X 14, GR8.8	8
18	GA5073280	SHAFT, OUTPUT, WITH WHEEL HUB, DROP LEG, DROMOS	2
19	GA5072950	STUD M22X1,5X85 CL. 010.9, AXLE, DROMOS	20
20	GA5026659	SPACER, DROP LEG, HUB, DROMOS	2
21	GA0500247	WASHER, WHEEL, CONICAL SPLIT, M22, DROMOS	10
22	GA0500246	WHEEL NUT, GEOMET, M22 X 1.5, DROMOS	10
23	GA0500060	HEX SOCKET COUNTERSUNK FLAT HEAD CAP SCREW M8X25 UNI 593310.9	4

GA7800485 GOLDACRES	PARTS DRAWING ONLY, DROP LEG, LOWER DRIVE ASSEMBLY, FRONT 4WD, DROMOS, SUIT, GA2700185	REV 00

Steering Assembly, Axle, Front 4WD

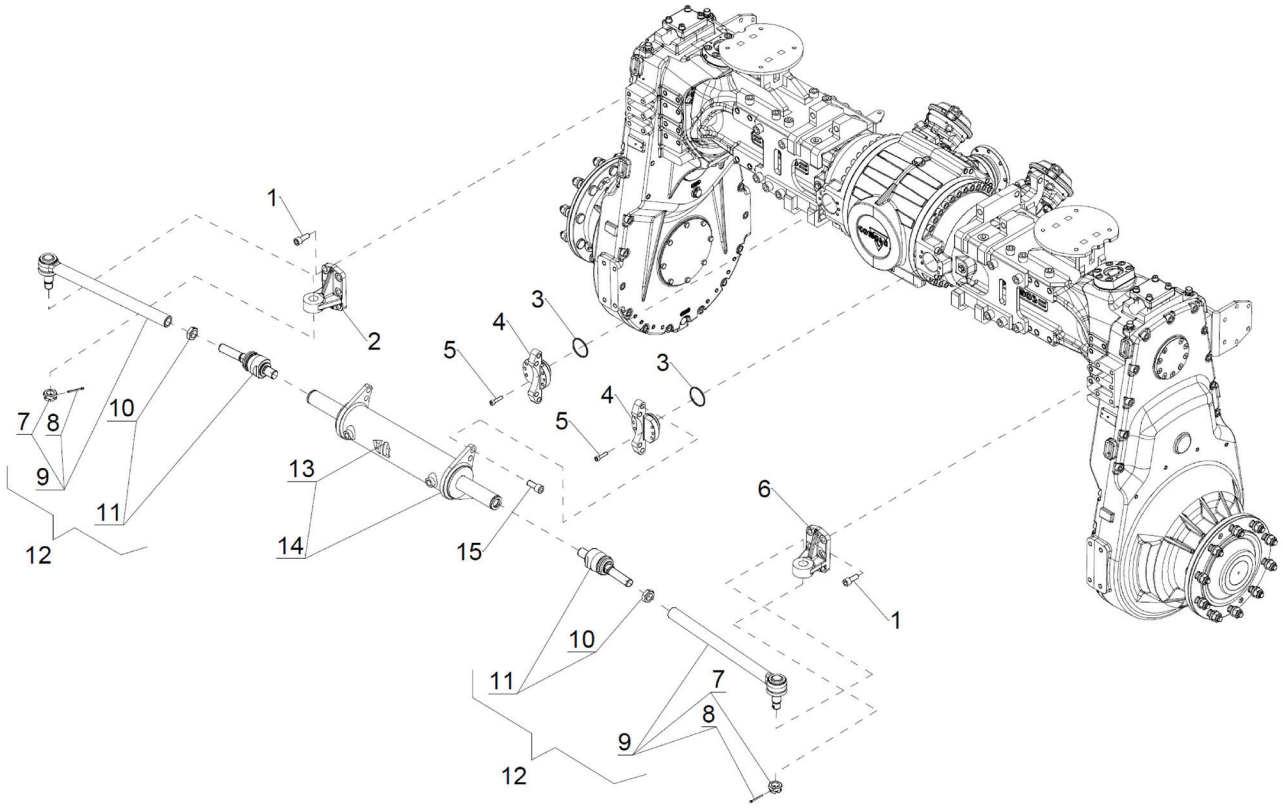

IF DESCRIPTION PREFIX IS ASSEMBLY DRAWING ONLY OR PRODUCTION DRAWING ONLY THE ITEM IS NOT FOR SALE			
ITEM	PART NUMBER	DESCRIPTION	QTY
1	GA5000925	SHCS M16 X 40 GR12.9 ZP	12
2	GA5078860	LEFT CONTROL LEVER, FRONT DROP LEG, 4WD	1
3	GA5026614	O-RING, ACTUATOR TO AXLE HOUSING, DROMOS	2
4	GA5026680	BRACKET, CYLINDER SUPPORT, AXLE, FRONT 4WD, DROMOS, SUIT, GA2700185	2
5	GA5006141	SHCS M10 X 40 GR12.9 ZP	12
6	GA5078861	RIGHT CONTROL LEVER, FRONT DROP LEG, 4WD	1
7	GA5056030	NUT M27 X 1.5, UNI 5594 Cl.8, DROMOS	2
8	GA5056035	SPLIT PIN, 5X4 UNI 1336, DROMOS	2
9	GA5026682	TIE ROD, WITH BALL JOINT, RIGHT ANGLE, AXLE, DROMOS, SUIT, GA2700185	2
10	GA5056040	NUT M28 X 1.5, DX, DROMOS	2
11	GA5026569	BALL JOINT, INLINE, M30 X 2.0 PITCH X M24 X 1.5 PITCH	2
12	GA5026568	TIE ROD ASSEMBLY, 3M FRONT AXLE, 4X4, DROMOS, LARGE FRAME S3	2
13	GA3501955	SEAL KIT, CYLINDER, HYDRAULIC, "DROMOS" SUIT, GA5026574	-
14	GA5026574	HYDRAULIC CYLINDER, BORE 4", ROD 2", STROKE 320mm, STEERING, LARGE FRAME S3	1
15	GA0500239	SHCS M18 X 40 UNI 5931 GR12.9	8
GA7800486 GOLDACRES		STEERING ASSEMBLY, AXLE, FRONT 4WD, DROMOS, SUIT, GA2700185	REV 00

Differential Centre Assembly, Rear, 4WD, Parts Breakdown

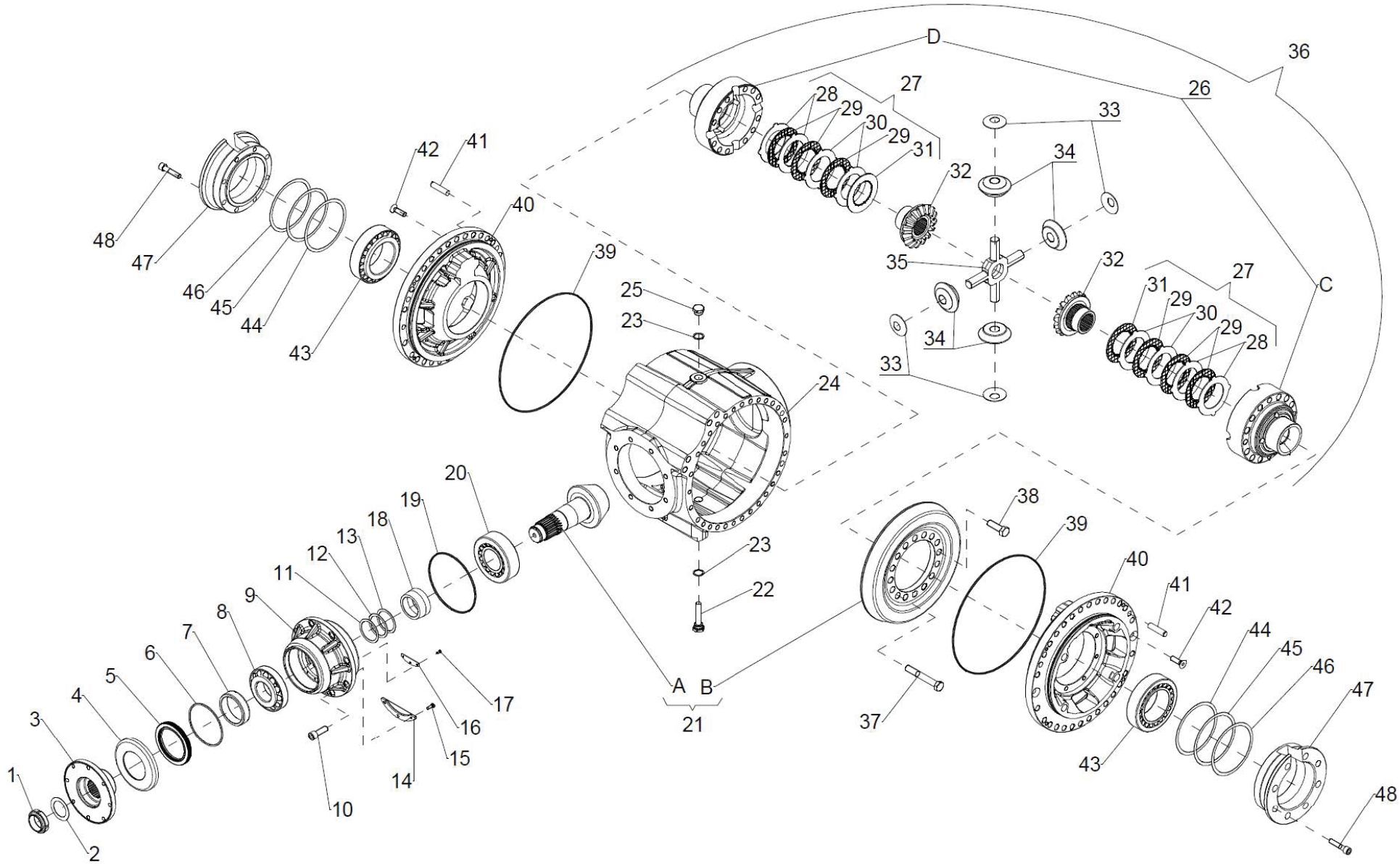

GA4909714	DIFF CENTRE, REAR AXLE, DROMOS, SERIES 3 G6-G8, SUIT, GA2700186	REV 00
GOLDACRES		

Differential Centre Assembly, Rear, 4WD, Parts List

IF DESCRIPTION PREFIX IS ASSEMBLY DRAWING ONLY OR PRODUCTION DRAWING ONLY THE ITEM IS NOT FOR SALE			
ITEM	PART NUMBER	DESCRIPTION	QTY
1	GA5026595	NUT, RING, DROMOS, SUIT, DIFF CENTRE, GA4909714	1
2	GA5056070	THRUST WASHER, 45X65X1 COD. AS4565, TORRINGTON, DROMOS	1
3	GA5056075	TRANSMISSION FLANGE, DIFFERENTIAL, DROMOS	1
4	GA5056080	OIL SEAL PROTECTOR, DIFFERENTIAL, DROMOS	1
5	GA5072790	OIL SEAL BAUM6SLX7 90X120X12 FKM REF.: SIMRIT	1
6	GA5056085	SHOULDER RING, BR 120, TORRINGTON, DROMOS	1
7	GA5072945	OIL SEAL RING RACE, DIFF INPUT, AXLE, G8, DROMOS	1
8	GA1700019	BEARING, TAPERED 31311 REF.: TIMKEN, AXLE, DROMOS	1
9	GA5026596	BEARING SUPPORT BUSH, DIFFERENTIAL, DROMOS,	1
10	GA5056090	CAP SCREW, SOCKET HEAD, HEXAGON, M14X40 UNI 5931 12.9, DROMOS	8
11	GA5056110	SHIM, 55X68X0.15, DIFFERENTIAL, DROMOS	1
12	GA5056100	SHIM, 55X68X0.30, DIFFERENTIAL, DROMOS	1
13	GA5056105	SHIM, 55X68X0.20, DIFFERENTIAL, DROMOS	1
14	GA5026597	PLATE, OIL LEVEL, DROMOS, SUIT, GA4909714	1
15	GA5004041	SET SCREW M6 X 16 GR8.8 ZP	3
16	GA5026598	OIL GUTTER, DIFFERENTIAL, DROMOS	1
17	GA0500233	SET SCREW, M4 X 8, GR12.9	3
18	GA5056115	SPACER, PINION, DIFFERENTIAL, DROMOS	1
19	GA5056340	O-RING, 2-260 - 164,69X3,53, NBR 70, PARKER, DROMOS	1
20	GA5056345	TAPERED BEARING, 32312 C, NTN, DROMOS	1
21	GA5026599	BEVEL GEAR & PINION, DROMOS, SUIT, GA4909714	1
22	GA5056130	MAGENETIC DRAIN PLUG, WITH ROD, M22X1.5-75 COD. FMC4M, MINTOR, DROMOS	1
23	GA5073435	WASHER, COPPER GASKET, 22 X 28 X 1.5 mm, DROMOS	2
24	GA5026600	CASING, CENTRAL, DIFFERENTIAL, DROMOS	1

IF DESCRIPTION PREFIX IS ASSEMBLY DRAWING ONLY OR PRODUCTION DRAWING ONLY THE ITEM IS NOT FOR SALE			
ITEM	PART NUMBER	DESCRIPTION	QTY
25	GA5078486	FILL PLUG, M22 X 1.5, DROMOS	1
26	GA5026601	HALF CARTER, GROUP, DIFFERENTIAL, DROMOS, SUIT, GA4909714	1
27	GA5026602	KIT, CLUTCH DISCS, DIFFERENTIAL, DROMOS, SUIT, GA4909714	2
28	GA5026603	DISC, INTERMEDIATE, OUTER, DIFFERENTIAL, DROMOS	4
29	GA5026604	DISC, CLUTCH, DIFFERENTIAL, DROMOS	6
30	GA5026605	DISC, INTERMEDIATE, INNER, DIFFERENTIAL, DROMOS	4
31	GA5026606	DISC, CLUTCH, INNER, SINGLE, DIFFERENTIAL, DROMOS	2
32	GA5026607	GEAR, PLANETARY, BEVELLED, DIFFERENTIAL, DROMOS	2
33	GA5056155	SUPPORT RING, PLANETARY, DIFFERENTIAL, DROMOS	4
34	GA5056160	PLANETARY GEAR, BEVELLED, DROMOS	4
35	GA5056165	CROSS, CENTRAL, SPIDER GEAR, DROMOS	1
36	GA5026608	DIFFERENTIAL UNIT, SELF-LOCKING, ASSEMBLY, DROMOS, SUIT, GA4909714	1
37	GA5056170	CAP SCREW, HEXAGONAL HEAD, M16X1.5X110, UNI 5738 10.9, DROMOS	12
38	GA5056175	CAP SCREW, HEXAGONAL HEAD, M16X1.5X50 UNI 5740 10.9, DROMOS	4
39	GA5026609	O-RING, DIFFERENTIAL SUPPORT, DROMOS	2
40	GA5026610	DIFFERENTIAL SUPPORT, CENTRE, DROMOS	2
41	GA5026611	PIN, PARALLEL, DIFFERENTIAL, DROMOS	2
42	GA5056185	CAP SCREW, HEXAGON SOCKET, FLAT HEAD, M12X40, UNI 5933 10.9, DROMOS	4
43	GA5026613	BEARING, DIFFERENTIAL, AXLE SUPPORT, DROMOS	2
44	GA5056205	SHIM, 133,4X149,7X0,30, DIFFERENTIAL, DROMOS	2
45	GA5056200	SHIM, 133,4X149,7X0,20, DIFFERENTIAL, DROMOS	4
46	GA5056195	SHIM, 133,4X149,7X0,15, DIFFERENTIAL, DROMOS	4
47	GA5056210	ADJUSTMENT SPACER, DIFFERENTIAL, DROMOS	2
48	GA5056215	HEXAGON SOCKET HEAD CAP SCREW, M12X55, UNI 5931 12.9, DROMOS	16

GA4909714 GOLDACRES	DIFF CENTRE, REAR AXLE, DROMOS, SERIES 3 G6-G8, SUIT, GA2700186	REV 00

Differential Axle Assembly, 4WD, Rear, Parts Breakdown

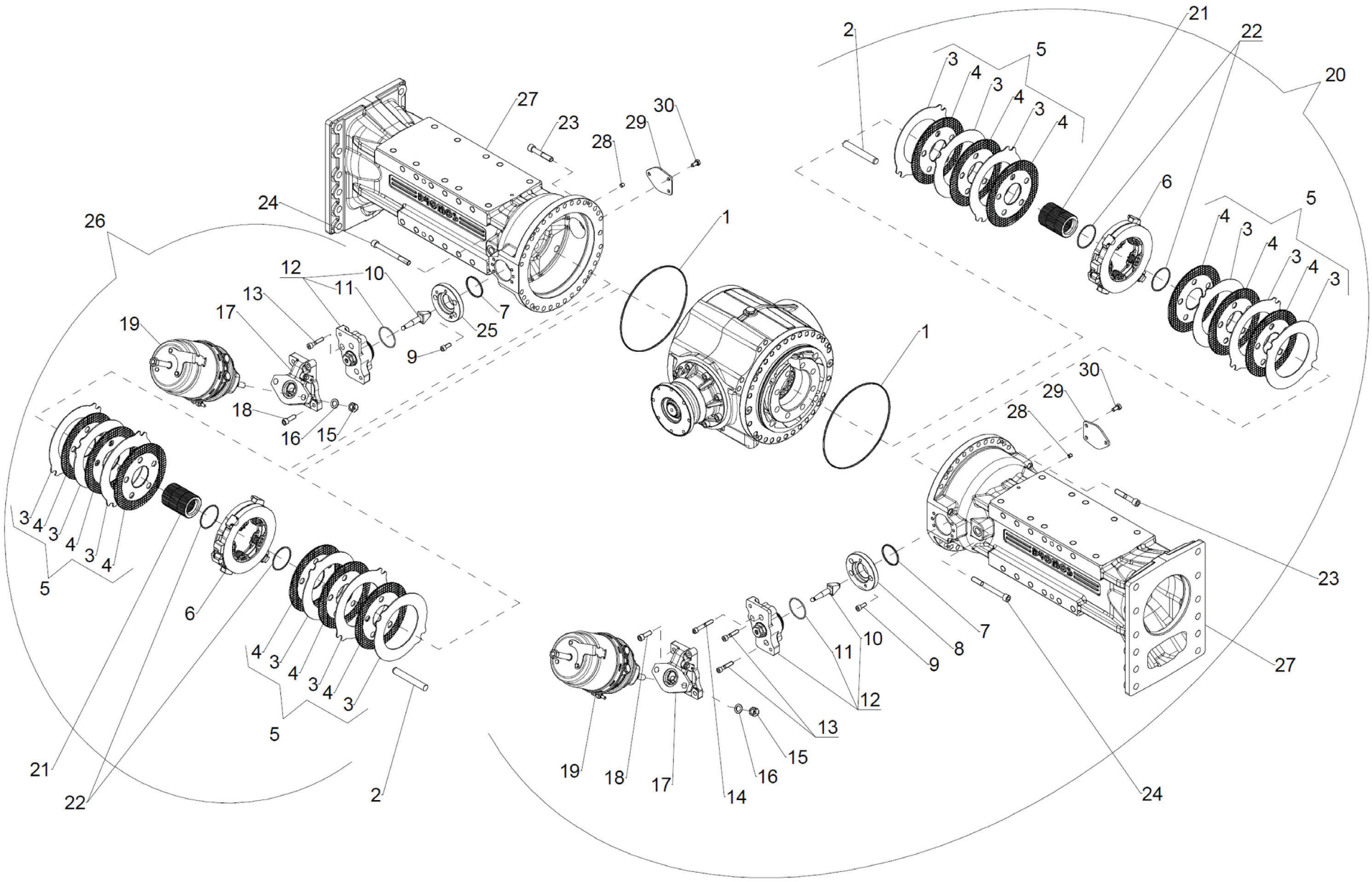

GA7800473	PARTS DRAWING ONLY, AXLE ASSEMBLY, REAR, 4WD, DROMOS, S3	REV 00

Differential Axle Assembly, 4WD, Rear, Parts List

IF DESCRIPTION PREFIX IS ASSEMBLY DRAWING ONLY OR PRODUCTION DRAWING ONLY THE ITEM IS NOT FOR SALE			
ITEM	PART NUMBER	DESCRIPTION	QTY
1	GA5056225	NOT SPECIFIED	2
2	GA5056460	PARALLEL PIN, 20X140, UNI EN ISO 8734, SUIT, DROMOS	8
3	GA5056230	DISC, INTERMEDIATE, BRAKE ASSY, AXLE, DROMOS	12
4	GA5056235	CLUTCH DISC, BRAKE ASSY, AXLE, DROMOS	12
5	GA5056240	KIT, BRAKE DISCS, DIFFERENTIAL, DROMOS	2
6	GA5056245	BRAKE CASING, DIFFERENTIAL, BRAKE ASSY, DROMOS	2
7	GA5026614	O-RING, ACTUATOR TO AXLE HOUSING, DROMOS	2
8	GA5026615	PLATE, RING, RH, ACTUATOR TO AXLE HOUSING, DROMOS	1
9	GA5026616	SCREW, ACTUATOR PLATE, AXLE, DROMOS	5
10	GA5026617	ADJUSTER BOLT, ACTUATOR, AXLE, DROMOS	2
11	GA5026618	O-RING, ACTUATION CYLINDER, DROMOS	2
12	GA5026619	CYLINDER, ACTUATION, BRAKE, DIFFERENTIAL, DROMOS	2
13	GA5049990	SHCS M10 X 50 GR 12.9 ZP	5
14	GA0500234	SHCS M10 X 70 GR12.9	1
15	001.112.0090.0	LOCK NUT	2

IF DESCRIPTION PREFIX IS ASSEMBLY DRAWING ONLY OR PRODUCTION DRAWING ONLY THE ITEM IS NOT FOR SALE			
ITEM	PART NUMBER	DESCRIPTION	QTY
16	001.120.0220.0	FLAT WASHER	2
17	GA5026620	CYLINDER, ACTUATION, BRAKE, DIFFERENTIAL, DROMOS	2
18	GA5000313	SHCS M12 X 35 GR12.9 ZP	4
19	GA5026621	CYLINDER, PNEUMATIC, REAR AXLE, DROMOS	2
20	GA5026622	DISC BRAKE, ASSEMLY, RH, REAR AXLE, 4WD, DROMOS	1
21	GA5056480	BRAKE SLEEVE, SUIT, DIFFERENTIAL, DROMOS	2
22	GA5056270	SHOULDER RING, WR 75, TORRINGTON, BRAKE ASSY, DROMOS	4
23	GA0500235	SHCS M14 X 80 GR12.9	48
24	GA0500236	SHCS M14 X 140 GR12.9	8
25	GA5026623	PLATE, RING, LH, ACTUATOR TO AXLE HOUSING, DROMOS	1
26	GA5026624	DISC BRAKE, ASSEMLY, LH, REAR AXLE, 4WD, DROMOS	1
27	GA5026625	SIDE BODY, RIGID, AXLE, REAR 4WD, DROMOS	2
28	GA0500240	GRUB SCREW M10 X 10 UNI 5923 45H	4
29	GA5026626	PLATE, COVER, AXLE, REAR 4WD, DROMOS	2
30	GA5006113	SET SCREW M10 X 20 GR8.8 ZP	6

Axle, Airbag Bracket Mounting, 4WD, Rear

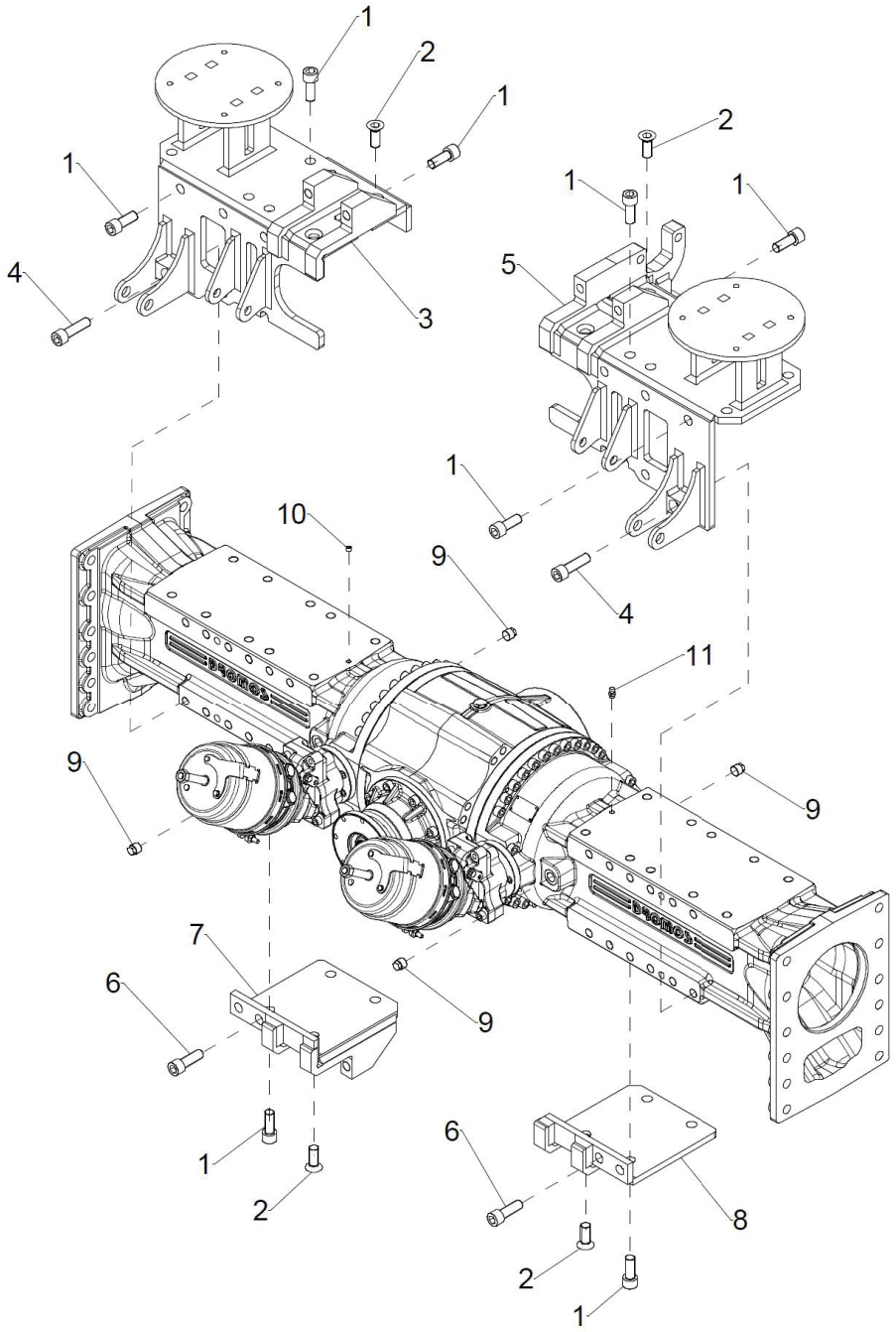

IF DESCRIPTION PREFIX IS ASSEMBLY DRAWING ONLY OR PRODUCTION DRAWING ONLY THE ITEM IS NOT FOR SALE			
ITEM	PART NUMBER	DESCRIPTION	QTY
1	GA0500028	SHCS, M20 X 50, ZP, GR12.9	32
2	GA0500237	SCREW, HEX HEAD, M20 X 50, COUNTERSUNK	6
3	GA5026627	BRACKET, AIRBAG MOUNT, LH, AXLE, REAR 4WD, DROMOS, SUIT, GA2700186	1
4	GA0500241	SHCS M20 X 70 UNI 5931 GR12.9	2
5	GA5026628	BRACKET, AIRBAG MOUNT, RH, AXLE, REAR 4WD, DROMOS, SUIT, GA2700186	1
6	GA5056330	SHCS, HEXAGON, M20X60, UNI 5931 12CAP SCREW, SOCKET HEAD, HEXAGON, M20X60, UNI 5931 12.9, DROMOS	4
7	GA5026629	BRACKET, BASE, AIRBAG, AXLE, LH, 4WD, DROMOS, SUIT, GA2700185 & GA2700186	1
8	GA5026630	BRACKET, BASE, AIRBAG, AXLE, RH, 4WD, DROMOS, SUIT, GA2700185 & GA2700186	1
9	GA5056295	CONICAL PLUG, HEXAGONAL HEAD, M22X1.5, DIN 909 5.8, DROMOS	4
10	GA5056220	CONICAL PLUG, HEXAGON SOCKET, HEAD CAP, M10X1, DIN 906 5.8, DROMOS	1
11	GA5026631	PLUG, BREATHER, AXLE, DROMOS	1
GA7800475 GOLDACRES		PARTS DRAWING ONLY, AXLE, AIR-BAG BRACKET MOUNTING, REAR, 4WD, DROMOS, SUIT, GA2700186	REV

Drive Shaft Assembly, Axle, Rear 4WD

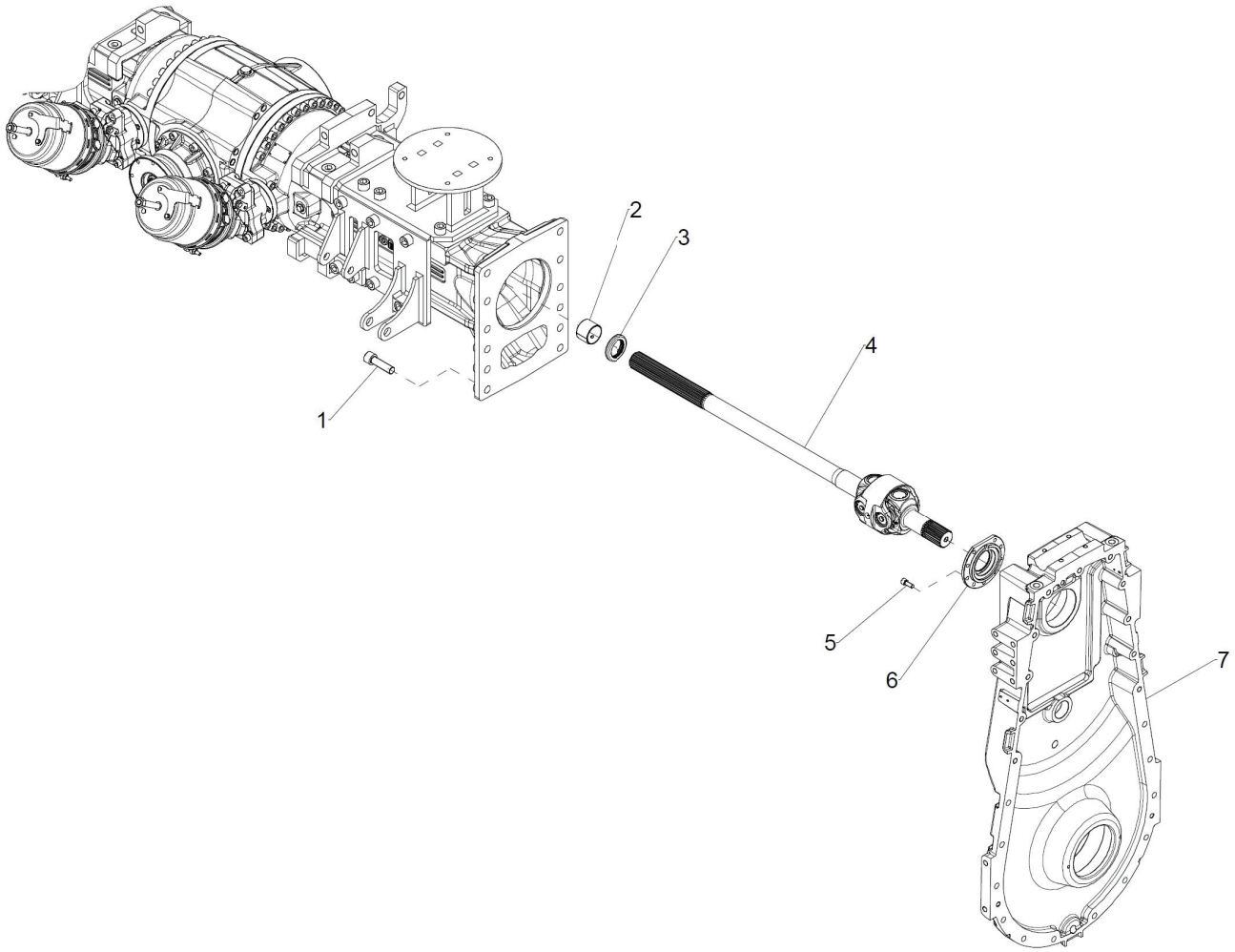

IF DESCRIPTION PREFIX IS ASSEMBLY DRAWING ONLY OR PRODUCTION DRAWING ONLY THE ITEM IS NOT FOR SALE			
ITEM	PART NUMBER	DESCRIPTION	QTY
1	GA0500241	SHCS M20 X 70 UNI 5931 GR12.9	1
2	GA1700022	BUSHING, BEARING, SLIDING, 50X55X40 C SB-20, AXLE, DROMOS	2
3	GA5026634	SEAL, OIL, DRIVESHAFT, AXLE, DROMOS	2
4	GA5026635	DRIVE SHAFT, WITH UNIVERSAL JOINT, AXLE, DROMOS, SUITS, GA2700185	2
5	GA5071085	SHCS M10 X 25 GR12.9 ZP	18
6	GA5026636	RING, SUPPORT COVER, DRIVE SHAFT, AXLE, DROMOS	2
7	GA5026637	COVER, INNER, DROP LEG, DROMOS, REAR 4WD	2
GA7800476 GOLDACRES		PARTS DRAWING ONLY, DRIVESHAFT, AXLE, REAR 4WD, DROMOS, SUIT, GA2700185	REV 00

Drop Leg, Upper Drive Assembly, Rear 4WD

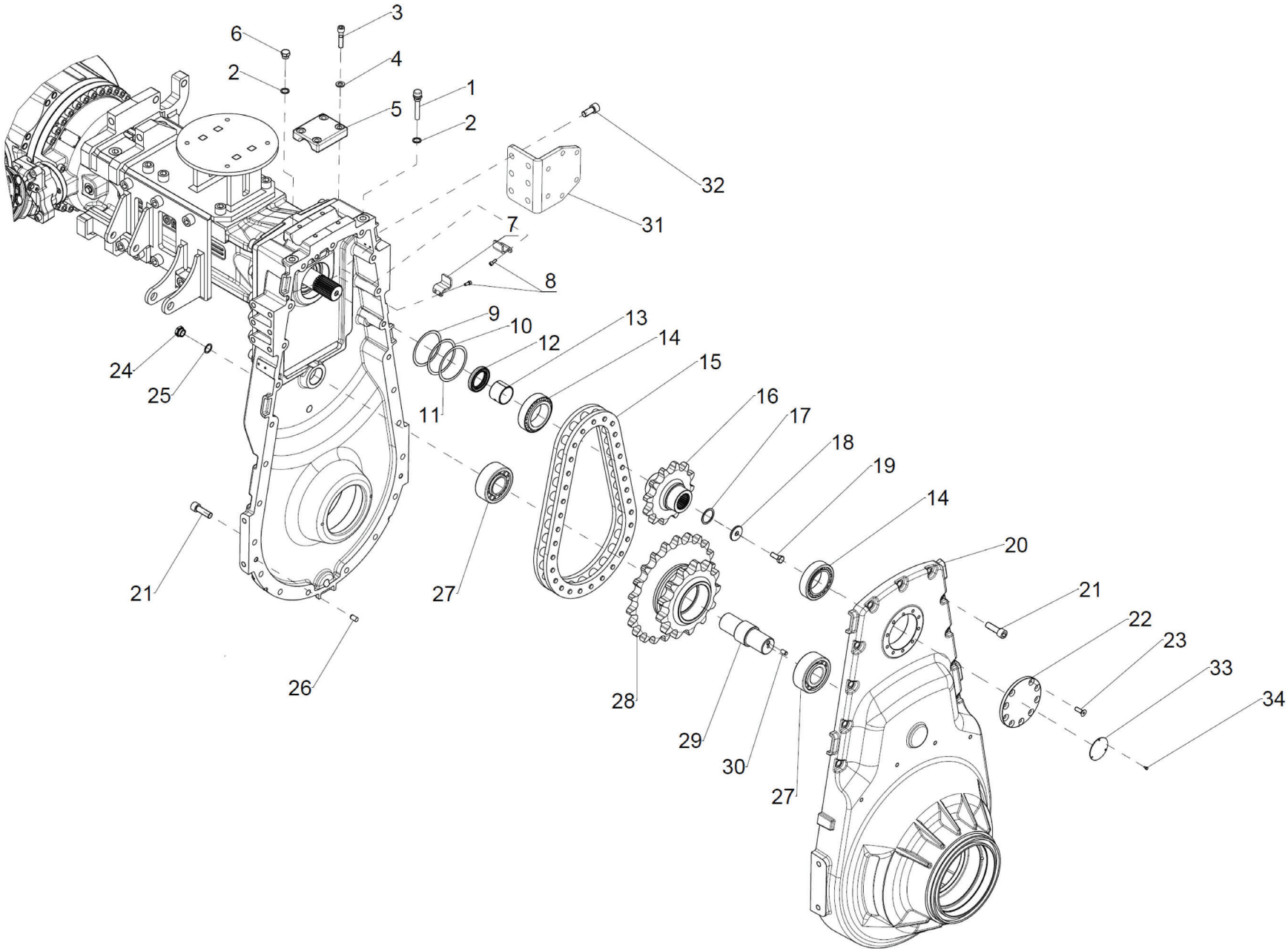

GA7800478	PARTS DRAWING ONLY, DROP LEG, UPPER INTERNAL DRIVE ASSEMBLY, REAR 4WD, DROMOS, SUIT, GA2700185	REV 00
GOLDACRES		

Drop Leg, Upper Drive Assembly, Rear 4WD, Parts List

IF DESCRIPTION PREFIX IS ASSEMBLY DRAWING ONLY OR PRODUCTION DRAWING ONLY THE ITEM IS NOT FOR SALE			
ITEM	PART NUMBER	DESCRIPTION	QTY
1	GA5073425	BREATHER PLUG WITHOUT VALVE WITH TUBE M18 X 1.5, DROP LEG, OIL, DROMOS	1
2	GA5073430	WASHER, COPPER GASKET, 18 X 24 X 1.5 mm, DROMOS	4
3	GA5056215	HEXAGON SOCKET HEAD CAP SCREW, M12X55, UNI 5931 12.9, DROMOS	8
4	GA5000577	WASHER M12 FLAT SS HD	8
5	GA5026638	PLATE, CLAMP, MUDGUARD PIPE, AXLE, DROMOS	2
6	GA5026639	PLUG, M18X1.5, HEX HEAD, DROMOS	2
7	GA5026640	BRACKET, PROTECTOR, OIL SHAKE, DROMOS	4
8	GA5004049	SHCS M6 X 16 GR12.9 ZP	8
9	GA5026641	SHIM, 95,2X109,8X0,20, DROMOS	4
10	GA5026642	SHIM, 95,2X109,8X0,30, DROMOS	2
11	GA5026643	SHIM, 95,2X109,8X0,15, DROMOS	6
12	GA5026634	SEAL, OIL, DRIVESHAFT, AXLE, DROMOS	2
13	GA1700022	BUSHING, BEARING, SLIDING, 50X55X40 C SB-20, AXLE, DROMOS	2
14	GA5026715	BEARING, ROLLER, TAPERED, 70X110X31	4
15	GA5026645	CHAIN, ROLLER, DROP LEG, UPPER DRIVE, DROMOS	2
16	GA5026646	SPROCKET, SPLINED, DROP LEG, UPPER DRIVE, DROMOS	2
17	GA5056305	RETAINING RING, BRAKE ASSY, AXLE, I45, UNI 7437, DROMOS	2

IF DESCRIPTION PREFIX IS ASSEMBLY DRAWING ONLY OR PRODUCTION DRAWING ONLY THE ITEM IS NOT FOR SALE			
ITEM	PART NUMBER	DESCRIPTION	QTY
18	GA5026647	WASHER, LOCKING, 44X30X7, DROMOS	2
19	GA5000305	SET SCREW M12 X 30 GR8.8 ZP	2
20	GA5026648	COVER, OUTER, DROP LEG, CASING, DROMOS, 4WD	2
21	GA5000935	SHCS M16 X 50 GR12.9 ZP	46
22	N/ A		-
23	N/A		-
24	GA5078486	FILL PLUG, M22 X 1.5, DROMOS	2
25	GA5073435	WASHER, COPPER GASKET, 22 X 28 X 1.5 mm, DROMOS	2
26	GA5073325	DOWEL PIN, M12 X 24, DROMOS	6
27	GA5026650	BEARING, DROP LEG, DROMOS.....	4
28	GA5026654	SPROCKET, DUAL, UPPER DRIVE, DROP LEG, DROMOS	2
29	GA5073385	IDLER SHAFT, DROP LEG, DROMOS	2
30	GA5026145	PARALLEL PIN A, 10X20 UNI EN ISO 8734	2
31	GA5026652	BRACKET, PIPE, MUDGUARD, CENTRE, DROP LEG, FRONT 4WD	2
32	GA5000935	SHCS M16 X 50 GR12.9 ZP	12
33	N/A		-
34	N/A		-

GA7800478 GOLDACRES	PARTS DRAWING ONLY, DROP LEG, UPPER INTERNAL DRIVE ASSEMBLY, REAR 4WD, DROMOS, SUIT, GA2700185	REV 00

Drop Leg, Lower Drive Assembly, Rear 4WD

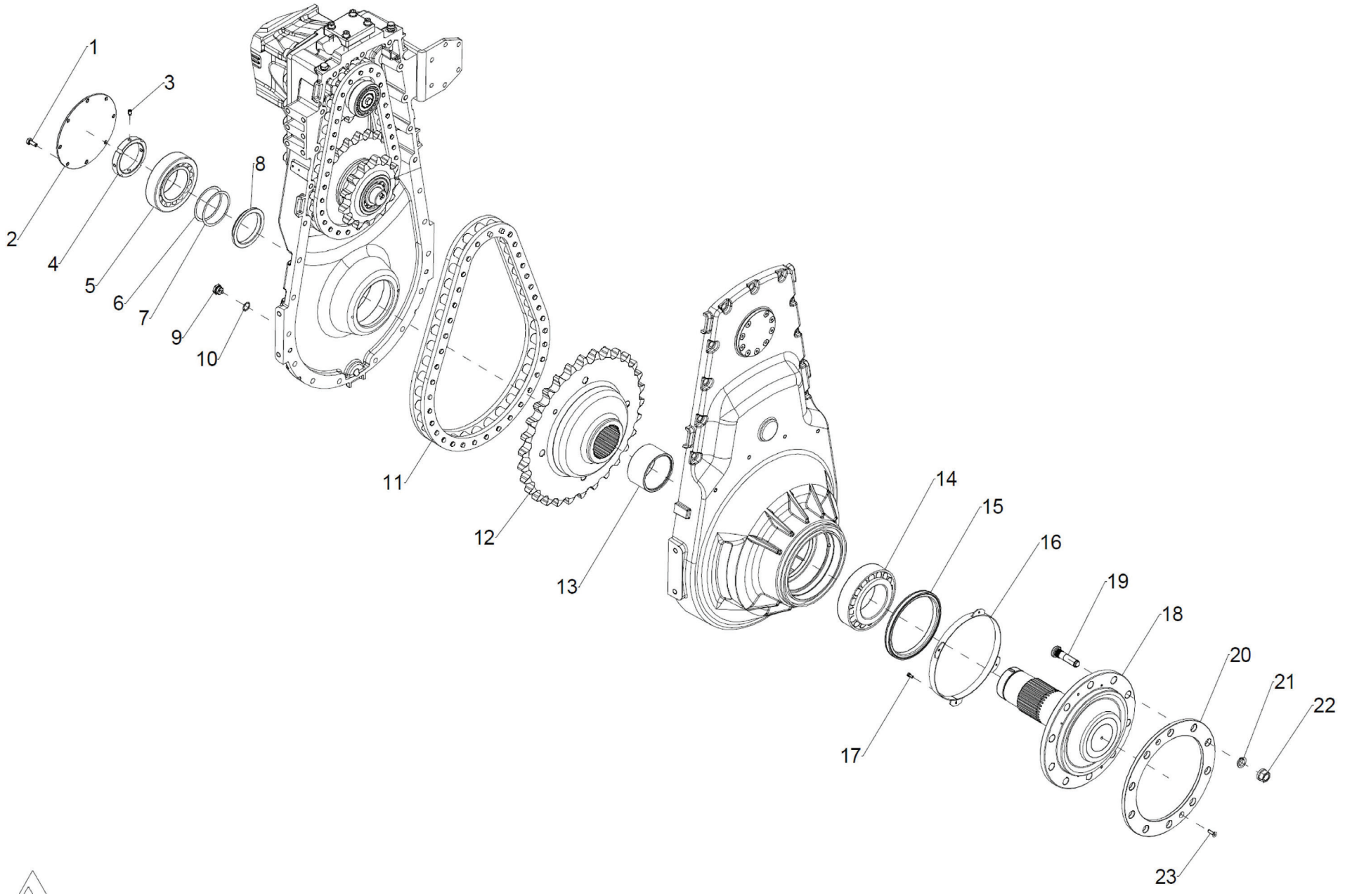

GA7800479 GOLDACRES	PARTS DRAWING ONLY, DROP LEG, LOWER DRIVE ASSEMBLY, REAR 4WD, DROMOS	REV 00

Drop Leg, Lower Drive Assembly, Rear 4WD, Parts List

IF DESCRIPTION PREFIX IS ASSEMBLY DRAWING ONLY OR PRODUCTION DRAWING ONLY THE ITEM IS NOT FOR SALE			
ITEM	PART NUMBER	DESCRIPTION	QTY
1	GA5006161	SET SCREW M10 X 25 GR8.8 ZP	16
2	GA5073375	PLATE, COVER, OUTPUT SHAFT, DROP LEG, G5 G6, DROMOS	2
3	GA5073370	GRUB SCREW, M10 X 16, DROMOS	2
4	GA5073365	RING NUT, DROP LEG, DROMOS	2
5	GA5026655	BEARING, DROP LEG, LOWER DRIVE, INNER.....	2
6	GA5073360	SHIM, OUTPUT SHAFT, 0.30mm, DROP LEG, DROMOS	4
7	GA5073350	SHIM, OUTPUT SHAFT, 0.15mm, DROP LEG, DROMOS	2
8	GA5073345	SPACER RING, SHORT, OUTPUT SHAFT, DROP LEG, DROMOS	2
9	GA5073445	PLUG, DRAIN, MAGNETIC, M22 X 1.5, DROP LEG, DROMOS	2
10	GA5073435	WASHER, COPPER GASKET, 22 X 28 X 1.5 mm, DROMOS	2
11	GA5026656	CHAIN, ROLLER, DROP LEG, LOWER DRIVE, DROMOS	2
12	GA5026657	SPROCKET, SPLINED, DROP LEG, LOWER DRIVE, DROMOS	2

IF DESCRIPTION PREFIX IS ASSEMBLY DRAWING ONLY OR PRODUCTION DRAWING ONLY THE ITEM IS NOT FOR SALE			
ITEM	PART NUMBER	DESCRIPTION	QTY
13	GA5073330	SPACER RING, LONG, OUTPUT SHAFT, DROP LEG, DROMOS	2
14	GA5026658	BEARING, DROP LEG, OUTER LOWER DRIVE, FRONT 4WD, DROMOS.....	2
15	GA5073295	SEAL, OIL, CASSETTE, T3 190X220X16/18 NBR, DROP LEG, DROMOS	2
16	GA5073285	OUTPUT SHAFT SEAL PROTECTION RING, DROP LEG, DROMOS	2
17	GA5073290	SHCS, M6 X 14, GR8.8	8
18	GA5073280	SHAFT, OUTPUT, WITH WHEEL HUB, DROP LEG, DROMOS	2
19	GA5072950	STUD M22X1,5X85 CL. 010.9, AXLE, DROMOS	20
20	GA5026659	SPACER, DROP LEG, HUB, DROMOS	2
21	GA0500247	WASHER, WHEEL, CONICAL SPLIT, M22, DROMOS	10
22	GA0500246	WHEEL NUT, GEOMET, M22 X 1.5, DROMOS	10
23	GA0500060	HEX SOCKET COUNTERSUNK FLAT HEAD CAP SCREW M8X25 UNI 593310.9	4

19 - Cabin

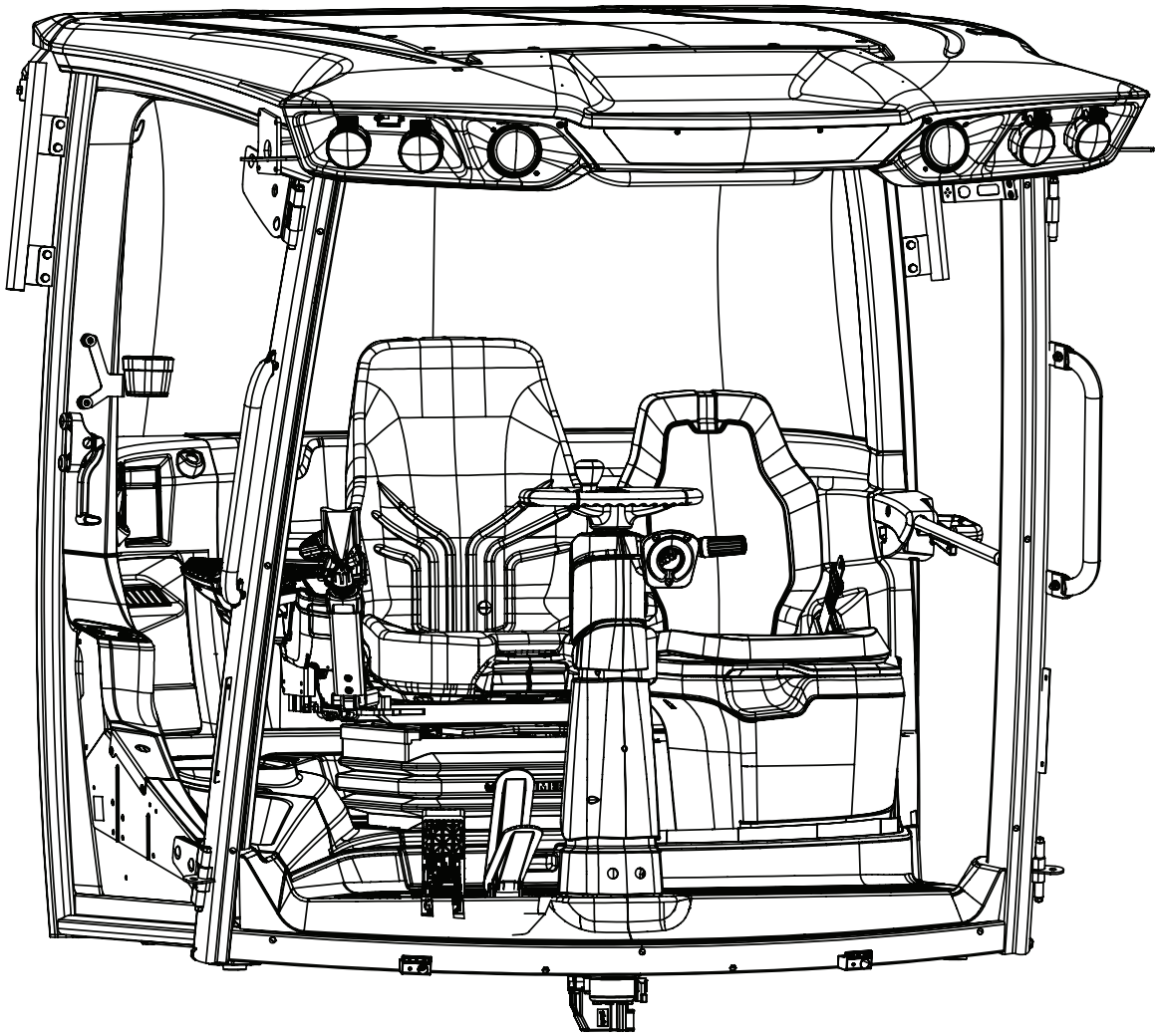

GA6101860 GOLDACRES	CABIN ASSEMBLY, CLAAS X11, LARGE FRAME SP S3, MY25 CONFIGURABLE	REV 01.D

RH Mirror & Hand Rails

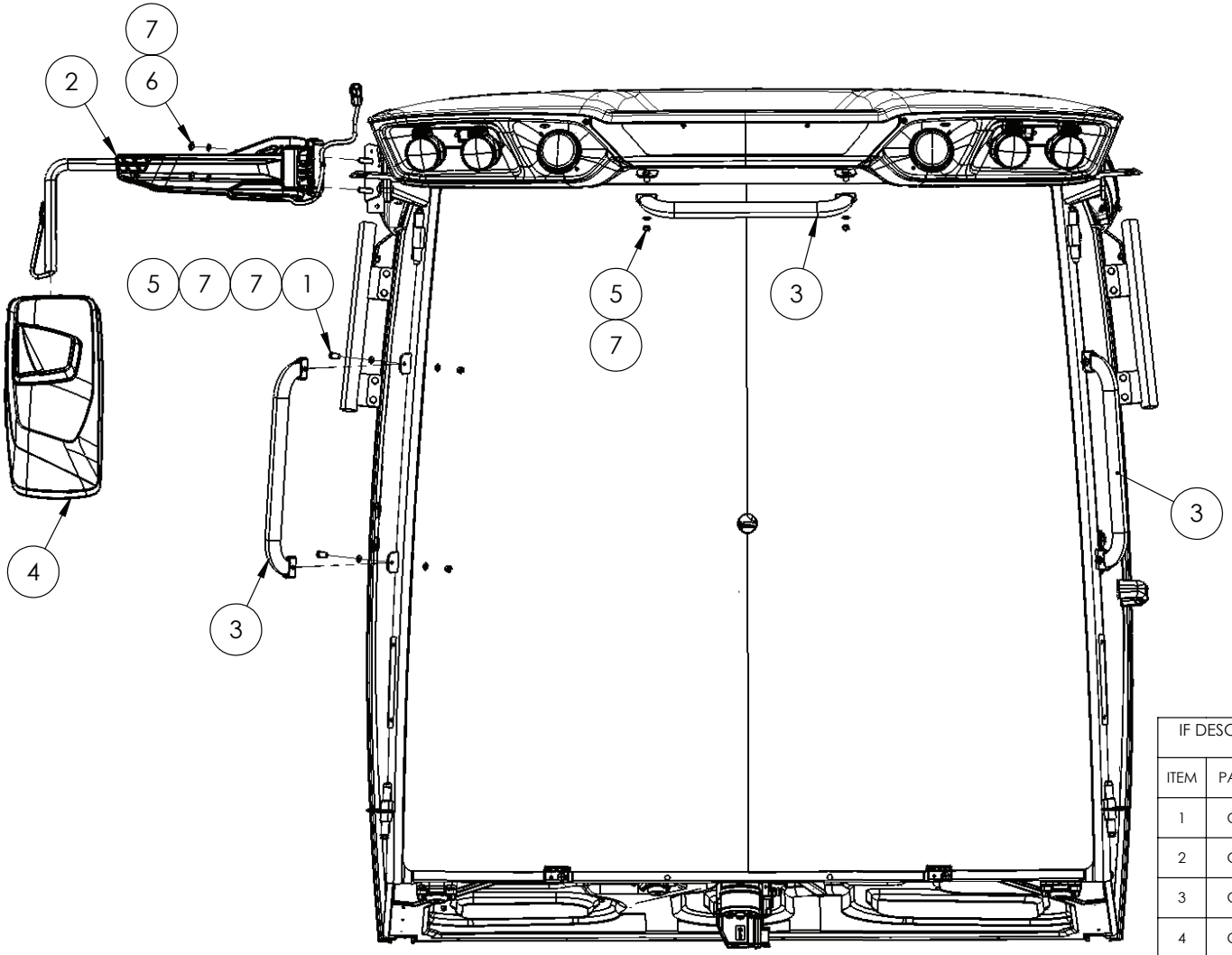

IF DESCRIPTION PREFIX IS ASSEMBLY DRAWING ONLY OR PRODUCTION DRAWING ONLY THE ITEM IS NOT FOR SALE			
ITEM	PART NUMBER	DESCRIPTION	QTY
1	GA5004085	BOLT M8 X 20 GR8.8 ZP	4
2	GA5026495	BRACKET, MIRROR ARM, RH, CABIN, CLAAS, X11	1
3	GA5079070	HANDLE, SUIT CLAAS CABIN X11, D32X2X508MM, 0027371942	3
4	GA5026	MIRROR, SIDE, RH, 12V, CABIN, CLAAS, X11	1
5	GA5052590	NUT M8 NYLOC SS	6
6	GA5011499	NUT M8 ZP	2
7	GA5003651	WASHER 8mm FLAT SS	12
GA7800464 GOLDACRES		PARTS DRAWING ONLY, ACCESS HANDLES, MIRROR & BRACKET ASSY, CABIN, CLAAS, X11	REV

Cabin Glasses

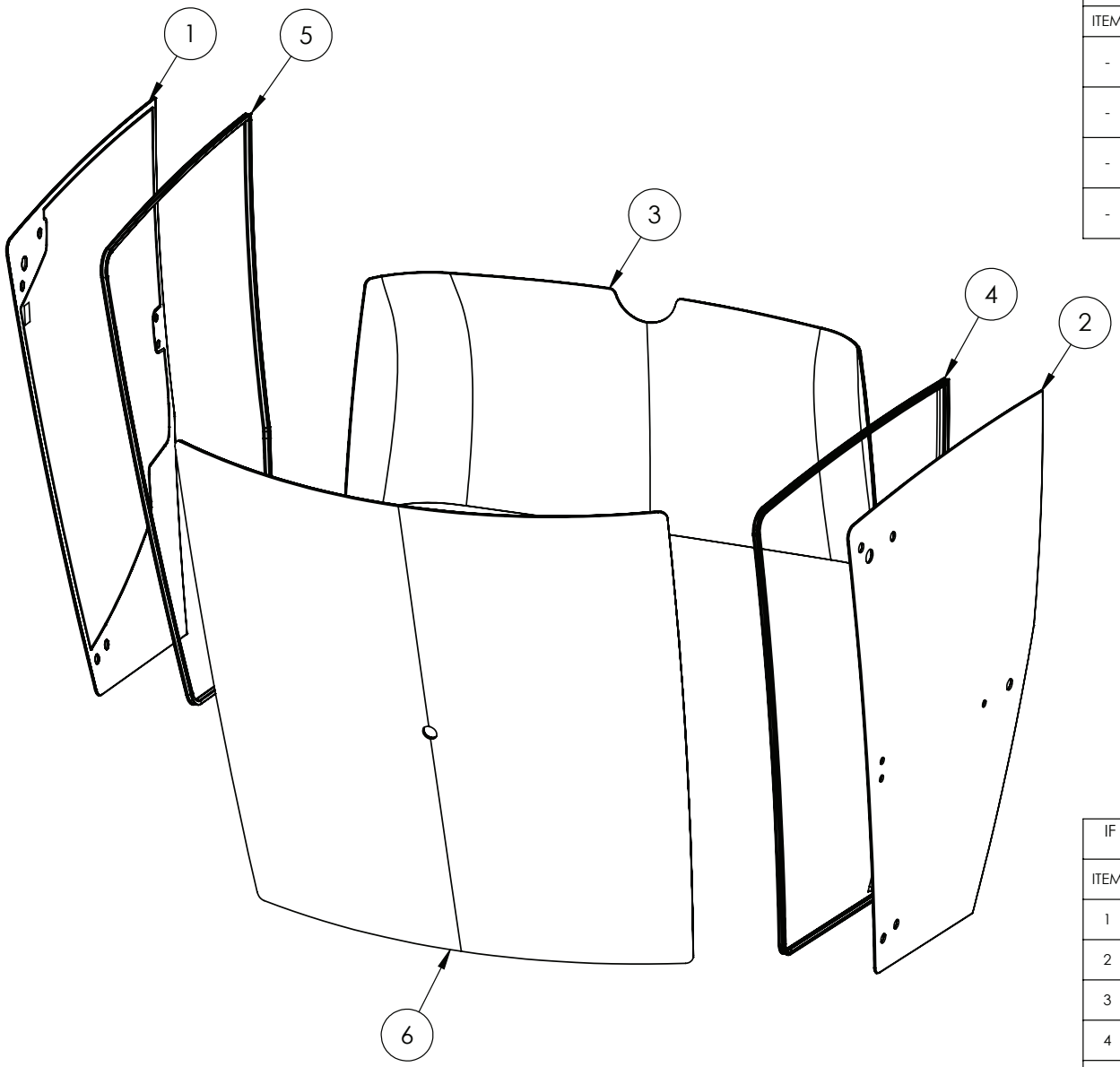

OPTIONAL PARTS			
ITEM	PART NUMBER	DESCRIPTION	QTY
-	GA5026468	BLIND, ROLLER, FRONT WINDOW, 390 X 1184, CABIN, CLAAS, X11	-
-	GA5026469	BLIND, ROLLER, REAR WINDOW, 1358 X 680, CABIN, CLAAS, X11	-
-	GA5026470	BLIND, ROLLER, LH, 854 X 717, CABIN, CLAAS, X11	-
-	GA5026471	BLIND, ROLLER, RH, 881 X 928, CABIN, CLAAS, X11	-

IF DESCRIPTION PREFIX IS ASSEMBLY DRAWING ONLY OR PRODUCTION DRAWING ONLY THE ITEM IS NOT FOR SALE			
ITEM	PART NUMBER	DESCRIPTION	QTY.
1	GA5026413	GLAAS, DOOR, RIGHT HAND, 6X1214X1608MM, X11 CLASS	1
2	GA5026415	GLASS, DOOR LEFT HAND, 6X1214X1608MM, X11 CLAAS	1
3	GA5026412	GLASS, REAR WINDOW, 7.06X753X1740MM, X11 CLAAS	1
4	GA5026416	SEAL, DOOR GLASS, LH ACCESS, CABIN, CLAAS, X11	1
5	GA5026414	SEAL, DOOR GLASS, RH, CABIN, CLAAS, X11	1
6	GA5026411	GLASS, FRONT WINDOW, LSG ACOUSTIC 7.76mm WINDSCREEN, X11 CLAAS, 00 2747 211 4	1
GA7800458 GOLDACRES		WINDOWS, ASSEMBLY DRAWING ONLY, CABIN, CLAAS, X11	REV

Wiper Motor Assembly

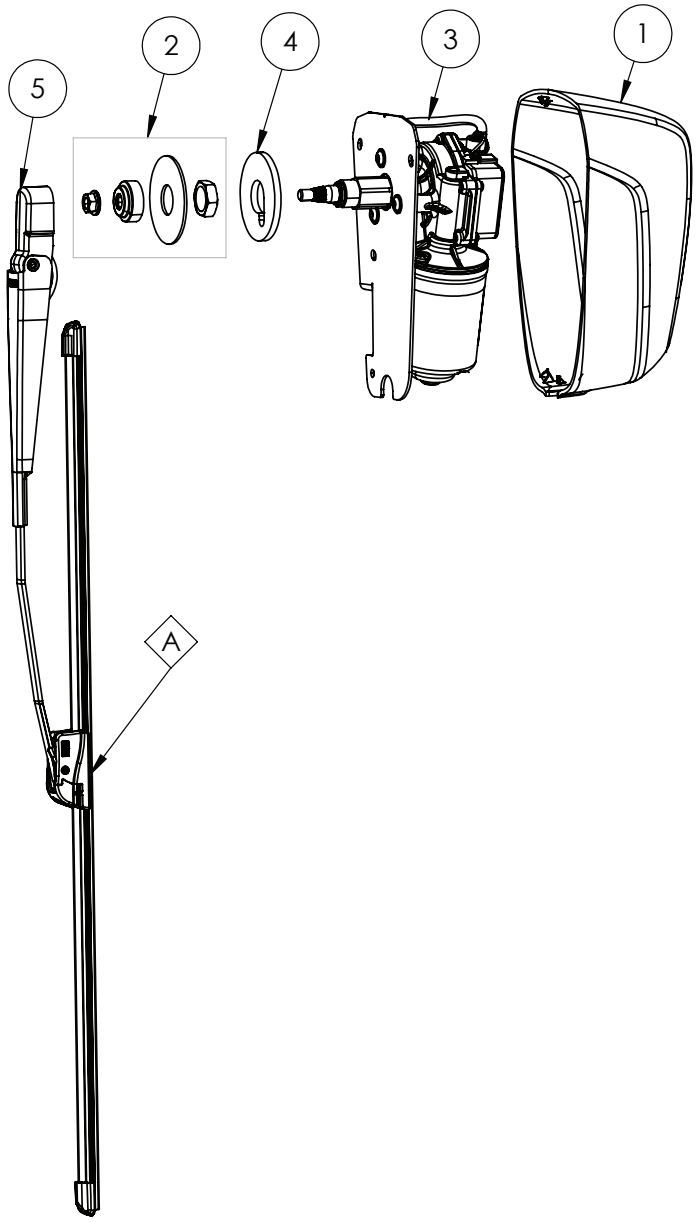

REPLACEMENT PARTS			
ITEM	PART NUMBER	DESCRIPTION	QTY
A	GA5026462	BLADE, WIPER, CABIN, CLAAS, X11	1

IF DESCRIPTION PREFIX IS ASSEMBLY DRAWING ONLY OR PRODUCTION DRAWING ONLY THE ITEM IS NOT FOR SALE			
ITEM	PART NUMBER	DESCRIPTION	QTY.
1	GA5026465	COVER, WIPER MOTOR, CABIN, CLAAS, X11	1
2	GA5026458	KIT, FITTING, WIPER MOTOR, CABIN, CLAAS	1
3	GA5078977	MOTOR, 12V, WINSCREEN WIPER, CLAAS X10, X11 CABIN, SERIAL NUMBER X1012900 ON	1
4	GA5026459	RUBBER, FOAM LATEX, WINDSCREEN WIPER, CABIN, CLAAS	1
5	GA5026461	WIPER ARM, WINDSCREEN, CABIN, CLAAS, X11	1
GA7800458 GOLDACRES		WINDOWS, ASSEMBLY DRAWING ONLY, CABIN, CLAAS, X11	REV

LH Access Door

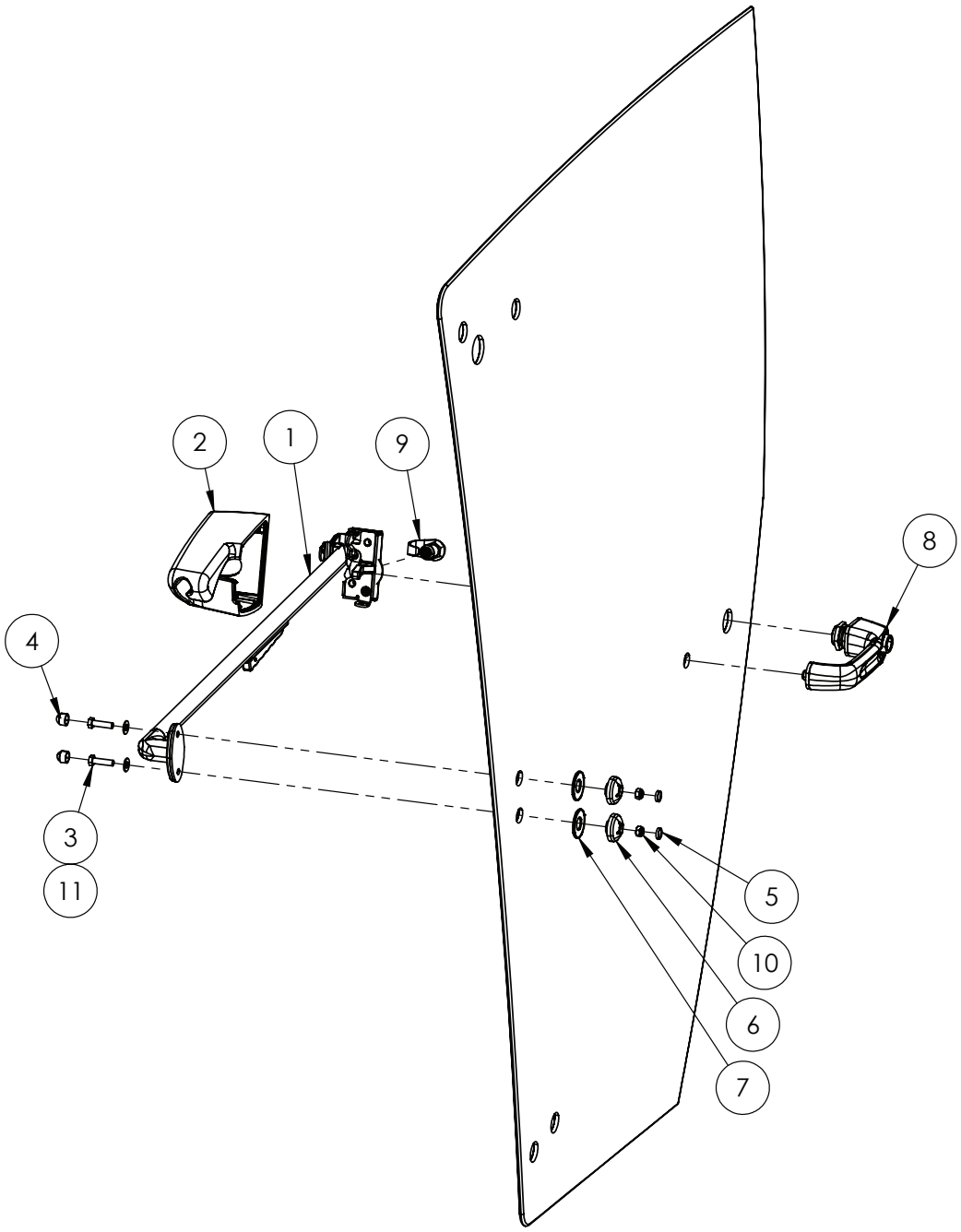

IF DESCRIPTION PREFIX IS ASSEMBLY DRAWING ONLY OR PRODUCTION DRAWING ONLY THE ITEM IS NOT FOR SALE			
ITEM	PART NUMBER	DESCRIPTION	QTY.
1	GA5026473	DOOR LOCK, CABIN, CLAAS, X11	1
2	GA5026475	ARMREST, DOOR, CABIN, X11	1
3	GA5011475	BOLT M8 X 30 GR8.8 ZP	2
4	GA5026479	CAP, BOLT COVER, M8	2
5	GA5026478	CAP, COVER, CLAAS X11	2
6	GA5026477	COVER DISC, DOOR, CABIN, CLAAS, X11	2
7	GA5026476	GASKET, GLASS, CABIN, CLAAS, X11	2
8	GA5026472	HANDLE, DOOR, CABIN, CLAAS, X11	1
9	GA5026474	LATCH PIN, ASSY, DOOR, CABIN, CLAAS X11	1
10	GA5004917	NUT M8 NYLOC ZP	2
11	GA5003643	WASHER 8mm FLAT SS HD	2
GA7800458 GOLDACRES		WINDOWS, ASSEMBLY DRAWING ONLY, CABIN, CLAAS, X11	REV

Locking Lever, RH Glass

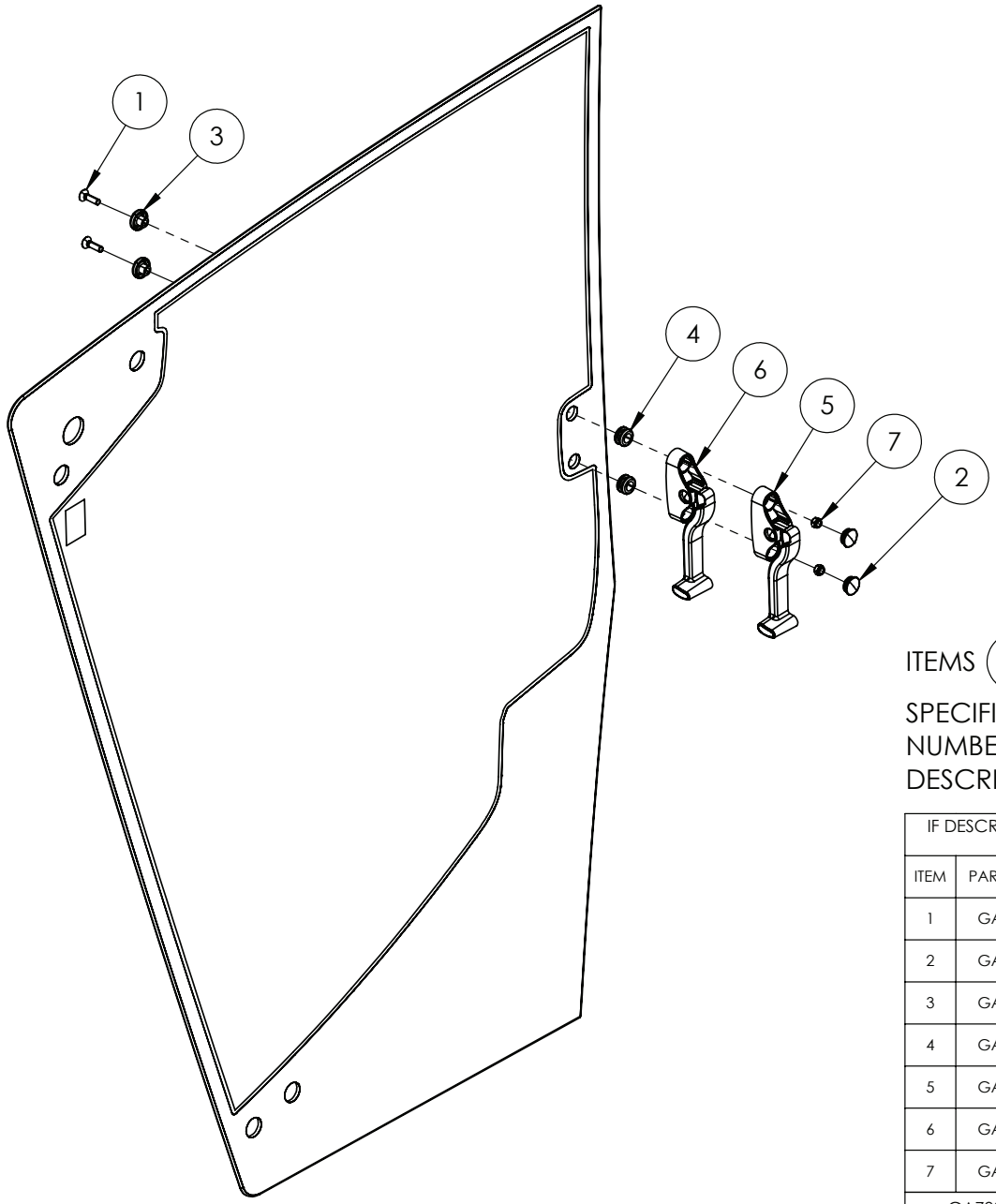

ITEMS 5 & 6 ARE TO SPECIFIC CABIN SERIAL NUMBERS. IDENTIFY BY PART DESCRIPTION

IF DESCRIPTION PREFIX IS ASSEMBLY DRAWING ONLY OR PRODUCTION DRAWING ONLY THE ITEM IS NOT FOR SALE			
ITEM	PART NUMBER	DESCRIPTION	QTY.
1	GA0500203	BOLT, M8X30, INNEN-6RD-45-ISO10, COUNTERSUNK, STAR HEAD	2
2	GA5026485	PLUG, D17X4,8-D27	2
3	GA5026482	SPACER, GLASS, CABIN, CLAAS, X11	2
4	GA5026481	GROMMET, A 14X19X5,5	2
5	GA5026484	LEVER, LOCKING ASSY, RH WINDOW, CABIN, CLAAS, X11, FROM S/N X1100795	1
6	GA5026483	LEVER, LOCKING ASSY, RH WINDOW, CABIN, CLAAS, X11, UP TO S/N X1100794	1
7	GA5004917	NUT M8 NYLOC ZP	2
GA7800458 GOLDACRES		WINDOWS, ASSEMBLY DRAWING ONLY, CABIN, CLAAS, X11	REV

RH Front Pillar, Cabin

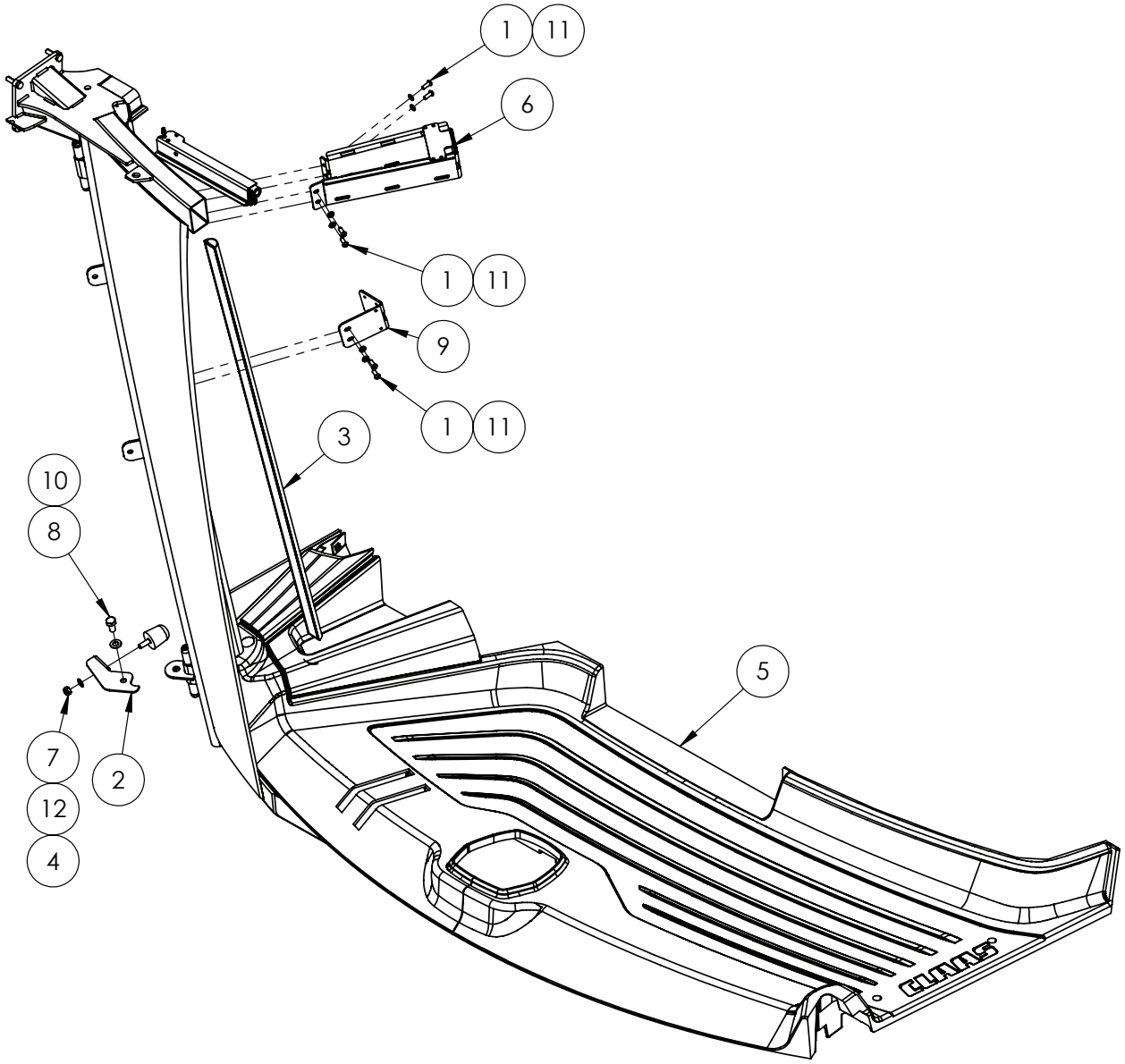

IF DESCRIPTION PREFIX IS ASSEMBLY DRAWING ONLY OR PRODUCTION DRAWING ONLY THE ITEM IS NOT FOR SALE			
ITEM	PART NUMBER	DESCRIPTION	QTY
1	GA5004050	BHCS M6 X 16 SS A2-70	6
2	GA4000794	BRACKET, LOWER DOOR STOPPER SUIT X11	1
3	GA4909659	CABLE COVER, D-LINE 30X15MM BLACK SELF ADHESIVE 1M	1
4	GA5054360	DOOR STOP, RUBBER, SUIT CLAAS CAB 2011 - 0000767220	1
5	GA5026449	MAT. FLOOR, CABIN, CLAAS, X11	1
6	GA4525260	MOUNING PLATE, A PILLAR TO RAM MOUNT, X11 CABIN	1
7	GA5004917	NUT M8 NYLOC ZP	1
8	GA5006113	SET SCREW M10 X 20 GR8.8 ZP	1
9	GA4000504	SUPPORT PLATE, A PILLAR CLAAS X11 CABIN	1
10	GA5000117	WASHER M10 FLAT SS HD	1
11	GA5004437	WASHER M6 FLAT SS HD	6
12	GA5003651	WASHER M8 FLAT SS	1
GA6101860 GOLDACRES		CABIN ASSEMBLY, CLAAS X11, LARGE FRAME SP S3, MY25 CONFIGURABLE	REV 01.D

RH Rear Pillar, Cabin

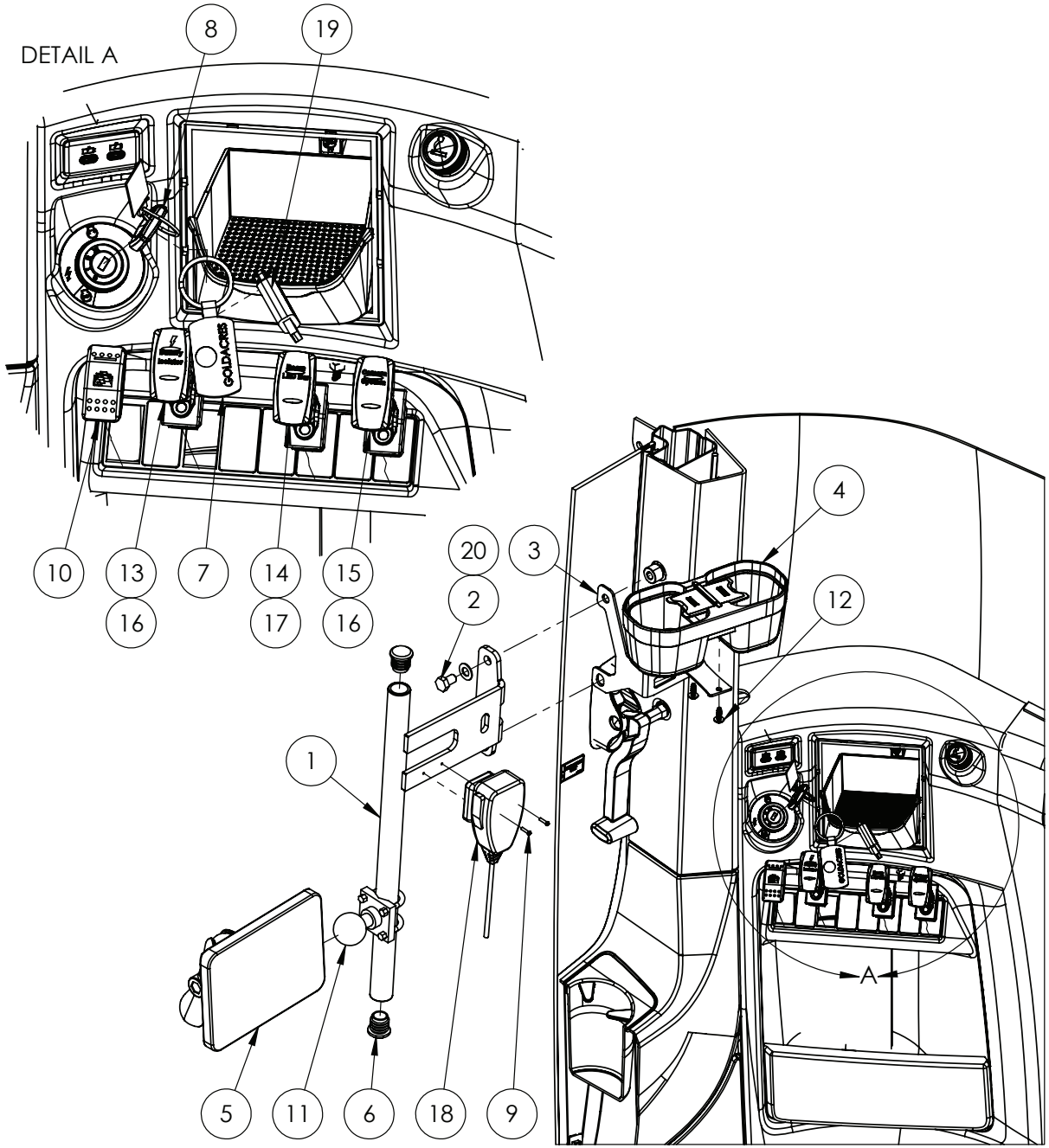

IF DESCRIPTION PREFIX IS ASSEMBLY DRAWING ONLY OR PRODUCTION DRAWING ONLY THE ITEM IS NOT FOR SALE			
ITEM	PART NUMBER	DESCRIPTION	QTY
1	GA4605096	ACC MOUNTING POST LOWER, B PILLAR, CLAAS X11 CABIN	1
2	GA5006143	BOLT M10 X 16 GR8.8 ZP	2
3	GA5026456	BRACKET, CUP HOLDER, CABIN, CLAAS, X11	1
4	GA5026455	CUP HOLDER, CABIN, CLAAS, X11	1
5	GA3001330	DISPLAY, ISO BUS, UNIVERSAL TERMINAL UNLOCK, CR7+, RAM-C MOUNT, RAVEN 11172295040	1
6	GA5052911	END CAP, PLASTIC, BLACK, INSERT, ROUND, 20NB TUBE OD 26.9mm, 026003700	2
7	GA5072460	KEY RING, ENGRAVED GOLDACRES LOGO	1
8	GA5054206	MASTER KEY, SUIT CLAAS CABIN DOOR AND IGNITION, 2017 ON	1
9	GA5003083	PAN HEAD, M3 X 12mm SS	2
10	GA3001112	RJ45 PASS THROUGH, UHF INSERT CARLING ROCKER SWITCH, ROKSWCH-RJ45	1
11	GA5054425	RAM MOUNT, U BOLT BASE, 1.5" BALL, SUIT 1" TO 1.25" RAIL	1
12	GA5026457	SCREW, PT, K60X16-T25-W	2
13	GA3000885	SWITCH ACTUATOR, BATTERY ISOLATOR, LASER ETCHED, S3	1
14	GA3000569	SWITCH ACTUATOR, BOOM LED BAR, LASER ETCHED	1
15	GA3000571	SWITCH ACTUATOR, CAMERA SYSTEM, LASER ETCHED	1
16	GA3000343	SWITCH BODY, MOM/OFF, DPDT, 2P2T, BLUE LED	2
17	GA3000344	SWITCH BODY, ON/ON, 2P2T, BLUE LED, NO ACTUATOR, CARLING	1
18	GA3001118	UHF, COMPACT CB RADIO, GME, XRS-370C	1
19	GA5070895	USB MEMORY STICK, 16GB FLASH DRIVE DATA STORAGE, GOLDACRES BRANDED	1
20	GA5000115	WASHER 10mm FLAT SS	2
GA6101860 GOLDACRES		CABIN ASSEMBLY, CLAAS X11, LARGE FRAME SP S3, MY25 CONFIGURABLE	REV 01.D

PLC & Cable Inlet Plate Mounting, Cabin,

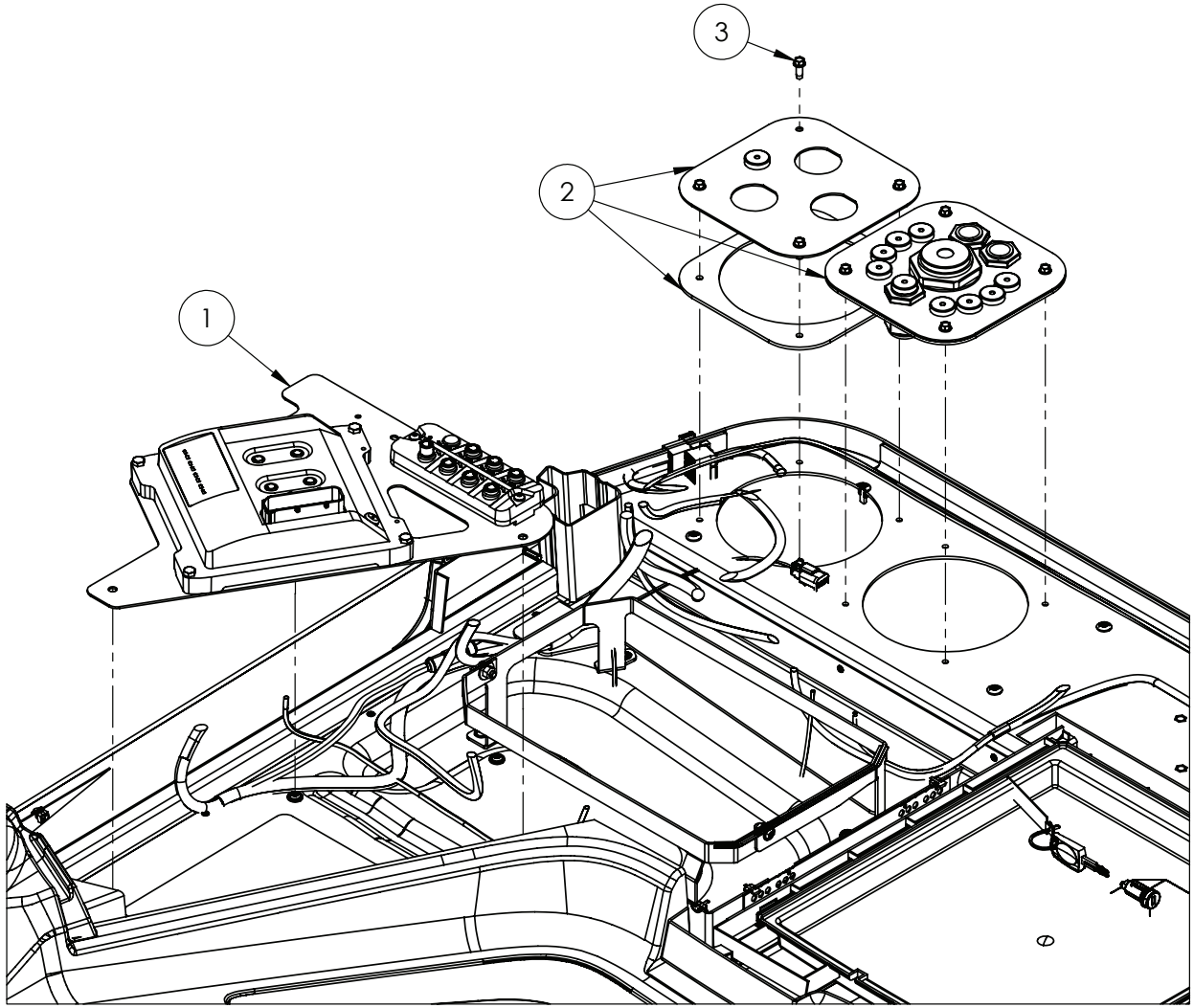

ASSEMBLIES ON FOLLOWING PAGE

IF DESCRIPTION PREFIX IS ASSEMBLY DRAWING ONLY OR PRODUCTION DRAWING ONLY THE ITEM IS NOT FOR SALE			
ITEM	PART NUMBER	DESCRIPTION	QTY
1	GA4909451	PLC CABIN MOUTING ASSEM, X11 S3	1
2	GA4909450	REAR CABLE ENTRY PLATE ASSEM, X11 S3	1
3	GA0500022	SET SCREW SELF TAPPING TRILOBE M6 X 16 ZP	8
GA6101860 GOLDACRES		CABIN ASSEMBLY, CLAAS X11, LARGE FRAME SP S3, MY25 CONFIGURABLE	REV 01.D

PLC Assembly

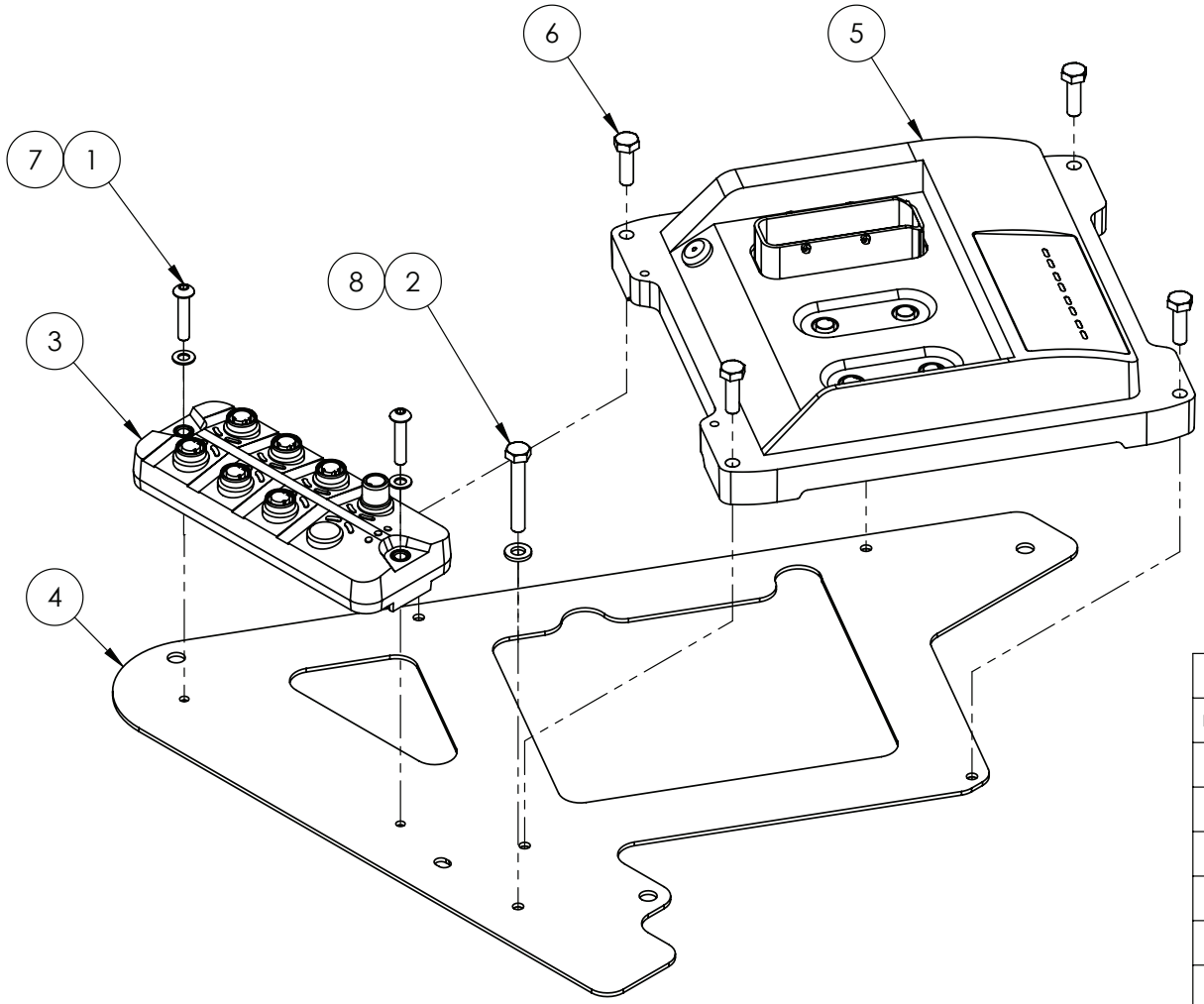

IF DESCRIPTION PREFIX IS ASSEMBLY DRAWING ONLY OR PRODUCTION DRAWING ONLY THE ITEM IS NOT FOR SALE			
ITEM	PART NUMBER	DESCRIPTION	QTY
1	GA0500178	BHCS M5 X 25 SS A2-70	2
2	GA5004081	BOLT M6 X 40 GR8.8 ZP	1
3	GA3001132	ETHERNET SWITCH, 6 PORT (UNMANAGED), M12, AL3050	1
4	GA4000106	MOUNT PLATE, PLC AND SWITCH, SUIT CLAAS X11 CABIN	1
5	GA3001170	PLC, G6 S3 MACHINE CONTROLLER MY25, CR710S, IFM	1
6	GA5004063	SET SCREW M6 X 20 SS A2-70	4
7	GA5003983	WASHER M5 FLAT SS	2
8	GA5004437	WASHER M6 FLAT SS HD	1
GA4909451 GOLDACRES		PLC CABIN MOUTING ASSEM, X11 S3	REV 00

Rear Cable Entry Plates, Assembly

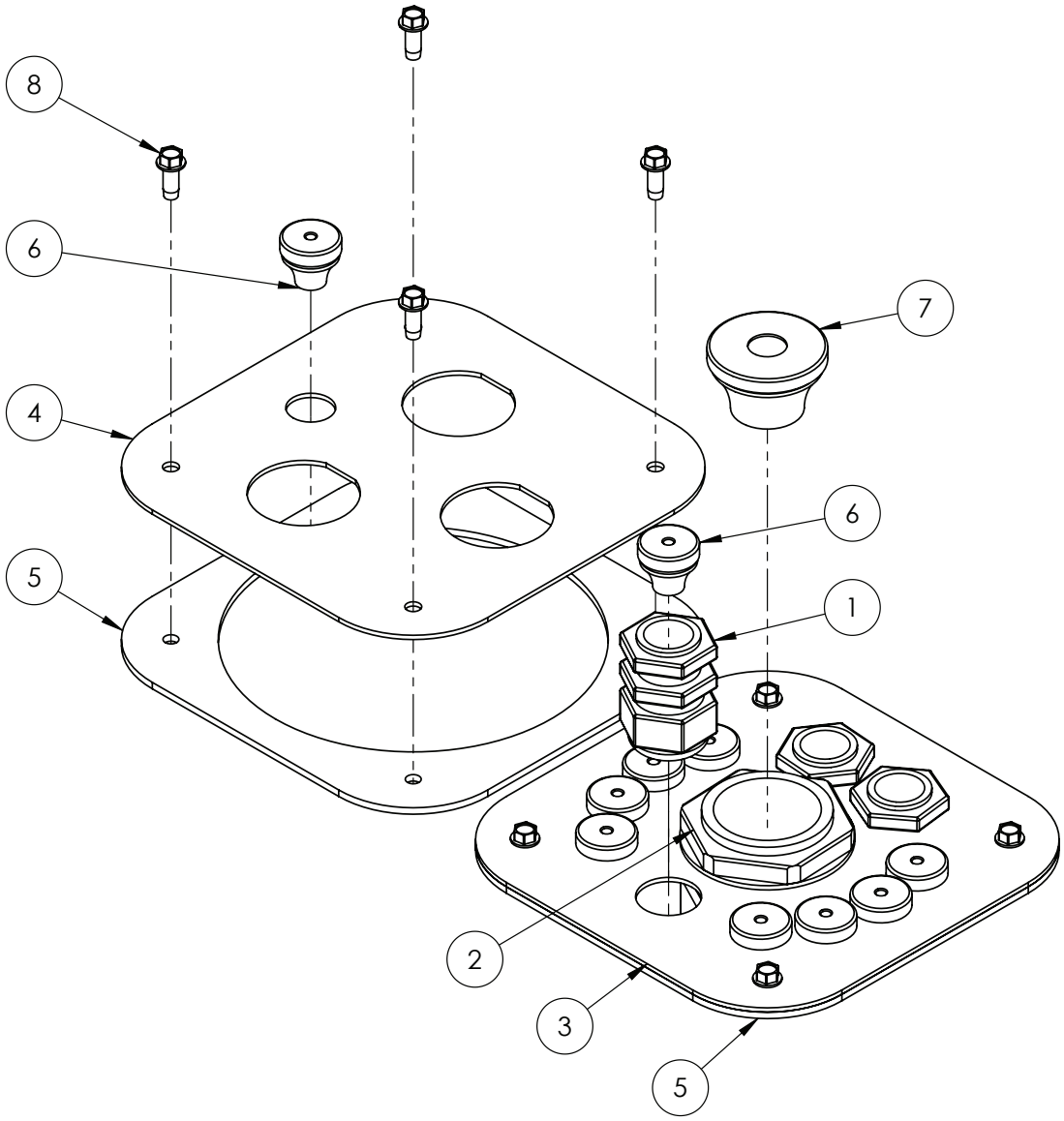

IF DESCRIPTION PREFIX IS ASSEMBLY DRAWING ONLY OR PRODUCTION DRAWING ONLY THE ITEM IS NOT FOR SALE			
ITEM	PART NUMBER	DESCRIPTION	QTY
1	GA3001074	25mm GLAND NUT	3
2	GA3001075	50mm GLAND NUT	1
3	GA4525345	COVER PLATE, FLOOR ELECTRICAL ACCESS A, X11 CABIN	1
4	GA4525315	COVER PLATE, FLOOR ELECTRICAL ACCESS B, X11 CABIN	1
5	GA4525340	GASKET, FLOOR ELECTRICAL ACCESS SEAL, X11 CABIN	2
6	GA5017703	GROMMET GREY 19X5MM	10
7	GA3001076	GROMMET GREY mm	1
8	GA0500022	SET SCREW SELF TAPPING TRILOBE M6 X 16 ZP	8
GA4909450 GOLDACRES		REAR CABLE ENTRY PLATE ASSEM, X11 S3	REV 00

Roof Assembly, External

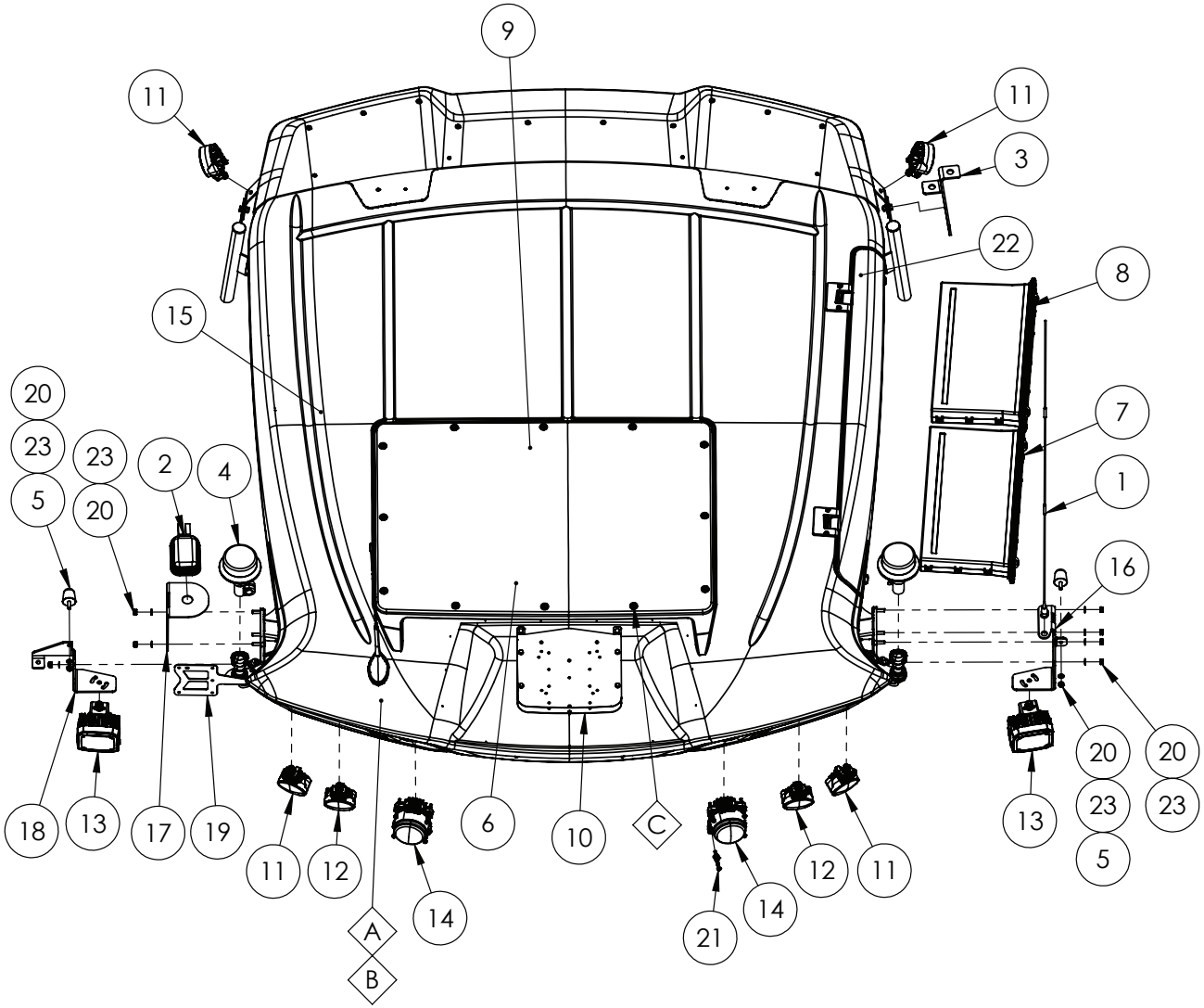

REPLACEMENT PARTS			
ITEM	PART NUMBER	DESCRIPTION	QTY
A	GA5026447	GROMMET, UPPER, HARNESS, ROOF LIGHTING, CABIN, CLAAS, X11	1
B	GA5026444	GROMMET, LOWER, HARNESS, ROOF LIGHTING, CABIN, CLAAS, X11	1
C	GA5026448	SCREW, TORX, M6X16, 6RD, SS	-

IF DESCRIPTION PREFIX IS ASSEMBLY DRAWING ONLY OR PRODUCTION DRAWING ONLY THE ITEM IS NOT FOR SALE			
ITEM	PART NUMBER	DESCRIPTION	QTY
1	GA5054265	AERIAL, UHF, AE409L GME (INCLUDES BASE & LEAD)	1
2	GA3001326	ANTENNA, MOBILE LTE/GNSS, 3M CABLE, FAKRA, IFM EC3158	1
3	GA4000502	AUX AERIAL MOUNTING BRACKET, SUIT REAR X11 CLASS CABIN	1
4	GA5048976	BEACON, LED, AMBER, DIN A POLE MOUNT, FLEXIBLE	2
5	GA5075600	BUFFER, ISOLATOR, SUIT CLAAS CABIN DOOR AND OIL TANK FRAME, 076 722.1	2
6	GA5026445	COVER, ROOF, CLAAS, CABIN, X11	1
7	GA5025920	FILTER, CARBON ELEMENT, SERIES 3, SUIT X11, CAT4, CLAAS	1
8	GA5025920	FILTER, CARBON ELEMENT, SERIES 3, SUIT X11, CAT4, CLAAS	1
9	GA5026410	FILTER, INTERNAL AIR ELEMENT, X11 CLAAS	1
10	GA4909653	GPS MOUNTING CLAAS X11 CABIN ROOF	1
11	GA3001335	LIGHT, LED, FLOOD, M70 S SERIES, 1850L, HELLA, 1G0 996 776-201	4
12	GA3001336	LIGHT, LED, SPOT, M70 S SERIES, 1850L, HELLA, 1G0 996 776-211	2
13	GA3001338	LIGHT, LED, SPOT, ULTRA BEAM S SERIES, HELLA, 1GA 995 706-011	2
14	GA5026454	LIGHT, WORKING, CABIN ROOF, FRONT-CENTRE, CLAAS, X11	1
15	GA3001325	MODEM, ETHERNET 4G LTE/GNSS IOT GATEWAY RADIO MODEM, IFM CR3171	1
16	GA4525275	MOUNTING PLATE ROOF LHS LIGHT SUPPORT, X11 CABIN	1
17	GA4525285	MOUNTING PLATE ROOF RHS ANTENNA MOUNT, X11 CABIN	1
18	GA4525280	MOUNTING PLATE ROOF RHS LIGHT SUPPORT, X11 CABIN	1
19	GA4000064	NUMBER PLATE MOUNTING PLATE, SUIT X11 CABIN	1
20	GA5004917	NUT M8 NYLOC ZP	9
21	GA5026452	RETAINER, WITH BOLT, WORKING LIGHT, CLAAS, CABIN, X11	9
22	GA5026446	SIDE PANEL ASSEMBLY, FILTER COVER, ROOF, CLAAS, X11	1
23	GA5003651	WASHER M8 FLAT SS	9
GA6101860 GOLDACRES		CABIN ASSEMBLY, CLAAS X11, LARGE FRAME SP S3, MY25 CONFIGURABLE	REV 01.D

Side Console Controls

REPLACEMENT PARTS			
ITEM	PART NUMBER	DESCRIPTION	QTY
A	GA5026431	CAP, MODULE SWITCH, SUIT, CLAAS CABIN, X11	-

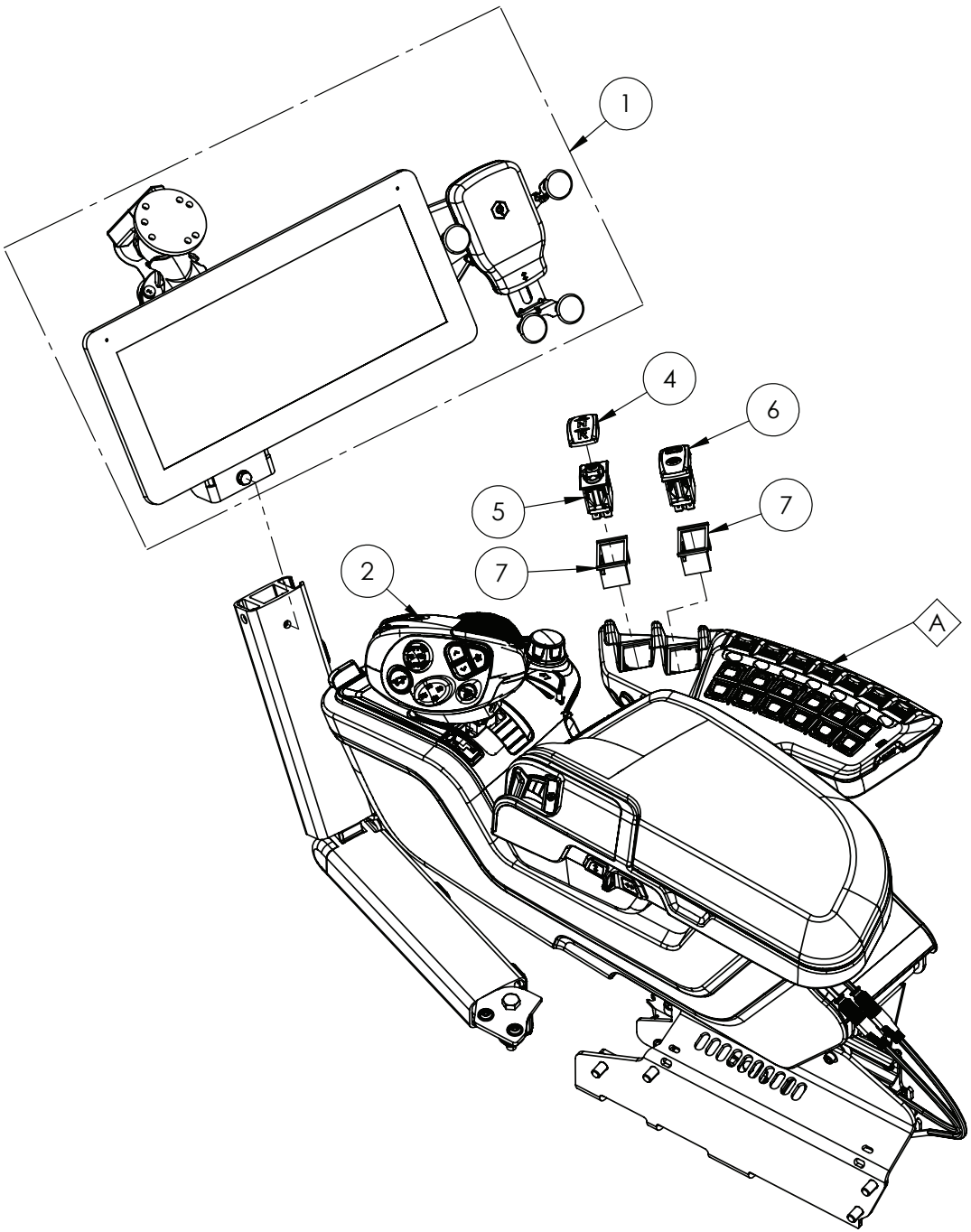

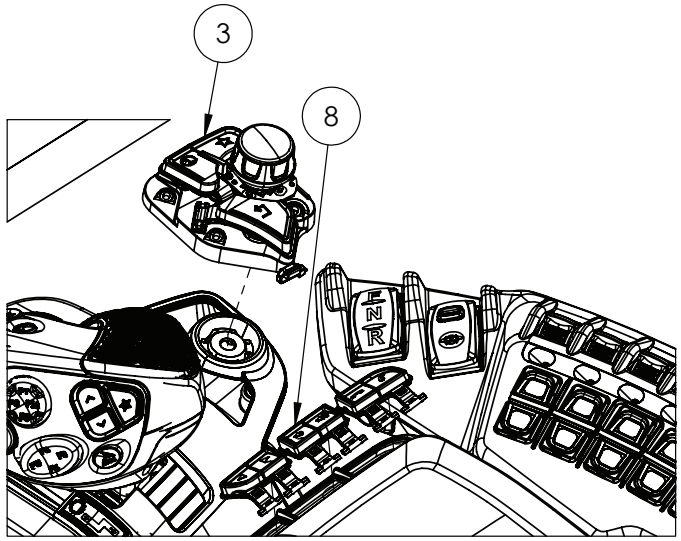

IF DESCRIPTION PREFIX IS ASSEMBLY DRAWING ONLY OR PRODUCTION DRAWING ONLY THE ITEM IS NOT FOR SALE			
ITEM	PART NUMBER	DESCRIPTION	QTY
1	GA4909449	ASSEMBLY DRAWING ONLY, GHUB DISPLAY MOUNT, CABIN X11 S3	1
2	GA5026429	JOYSTICK, WITH LOOM, MULTI FUNCTION, ERGONOMIC, X11, CLAAS	1
3	GA5026433	OPERATION CONTROL ASSEMBLY, FRONT, CONSOLE, CLAAS CABIN, X11	1
4	GA3001068	SWITCH ACTUATOR, DNR, LASER ETCHED	1
5	GA3000363	SWITCH BODY, ON/OFF/ON, 2P2T, BLUE LED, NO ACTUATOR, CARLING	1
6	GA3000362	SWITCH CARLING, LOCKING, PARK BRAKE, CONTURA V, G6 MY20	1
7	GA3001073	SWITCH MOUNT, CARLING V SERIES FIT INTO SWF L CUTOUT, CVA-01	2
8	GA5026432	SWITCH, PUSH BUTTON, INFOTAINMENT CLUSTER, CONSOLE, CLAAS CABIN, X11	1
GA6101860 GOLDACRES		CABIN ASSEMBLY, CLAAS X11, LARGE FRAME SP S3, MY25 CONFIGURABLE	REV 01.D

Ghub Display, Mounting Assembly

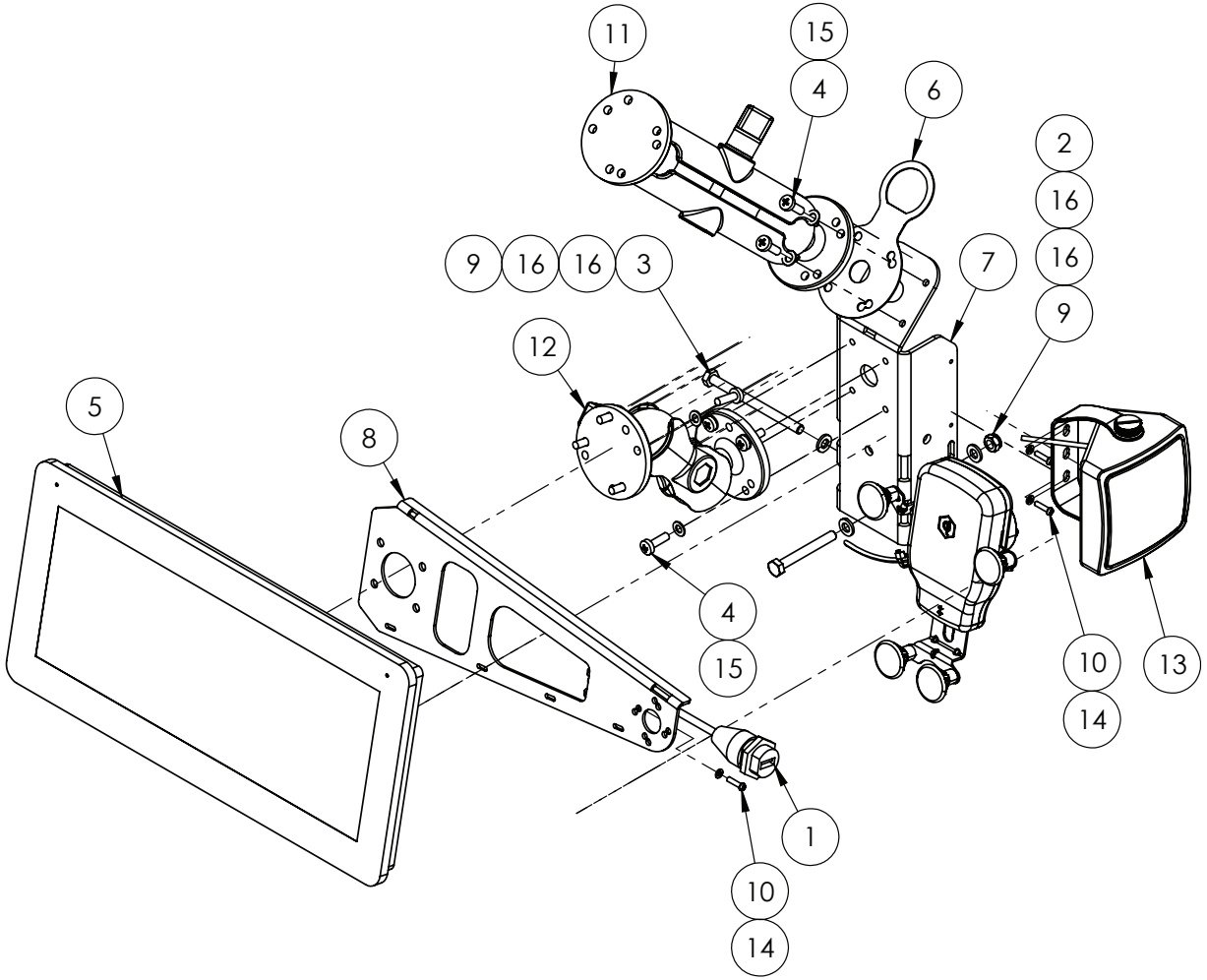

IF DESCRIPTION PREFIX IS ASSEMBLY DRAWING ONLY OR PRODUCTION DRAWING ONLY THE ITEM IS NOT FOR SALE			
ITEM	PART NUMBER	DESCRIPTION	QTY
1	GA3000470	AUXILIARY POWER SOCKET, DUAL USB, NARVA	1
2	GA5004091	BOLT M6 X 50 GR8.8 ZP	1
3	GA5011439	BOLT M6 X 80 GR8.8 ZP	1
4	GA5003977	BOLT PAN HEAD M5 X 16 SS A2-70	12
5	GA3001172	DISPLAY SCREEN, 12", TOUCH, G6/G8 S3, IFM, CR1203	1
6	GA4000069	ISO HARNESS MOUNTING PLATE, SUIT X11 CABIN	1
7	GA4525255	MOUNING PLATE, ACC POST TO RAM MOUNT, X11 CABIN	1
8	GA4525250	MOUNING PLATE, 12" DISPLAY TO PHONE HOLDER, X11 CABIN	1
9	GA5048115	NUT M6 NYLOC ZP	2
10	GA5003083	PAN HEAD, M3 X 12mm SS	3
11	GA5020825	RAM MOUNT	1
12	GA5020825	RAM MOUNT, UNIVERSAL, ADJUSTABLE, C SIZE 1.5" BALL, 5.24", WITH ROUND MOUNTS, RAM-101U-B	1
13	GA3000334	SPEAKER, 5W POWER, 8 OHM, 1.2M CABLE WITH 3.5mm JACK, BLACK	1
14	GA5011351	WASHER 3mm FLAT SS	3
15	GA5003983	WASHER M5 FLAT SS	12
16	GA5004437	WASHER M6 FLAT SS HD	4
GA4909449 GOLDACRES		ASSEMBLY DRAWING ONLY, GHUB DISPLAY MOUNT, CABIN X11 S3	REV 00.A

Bilberry Power Board, Mounting, Cabin

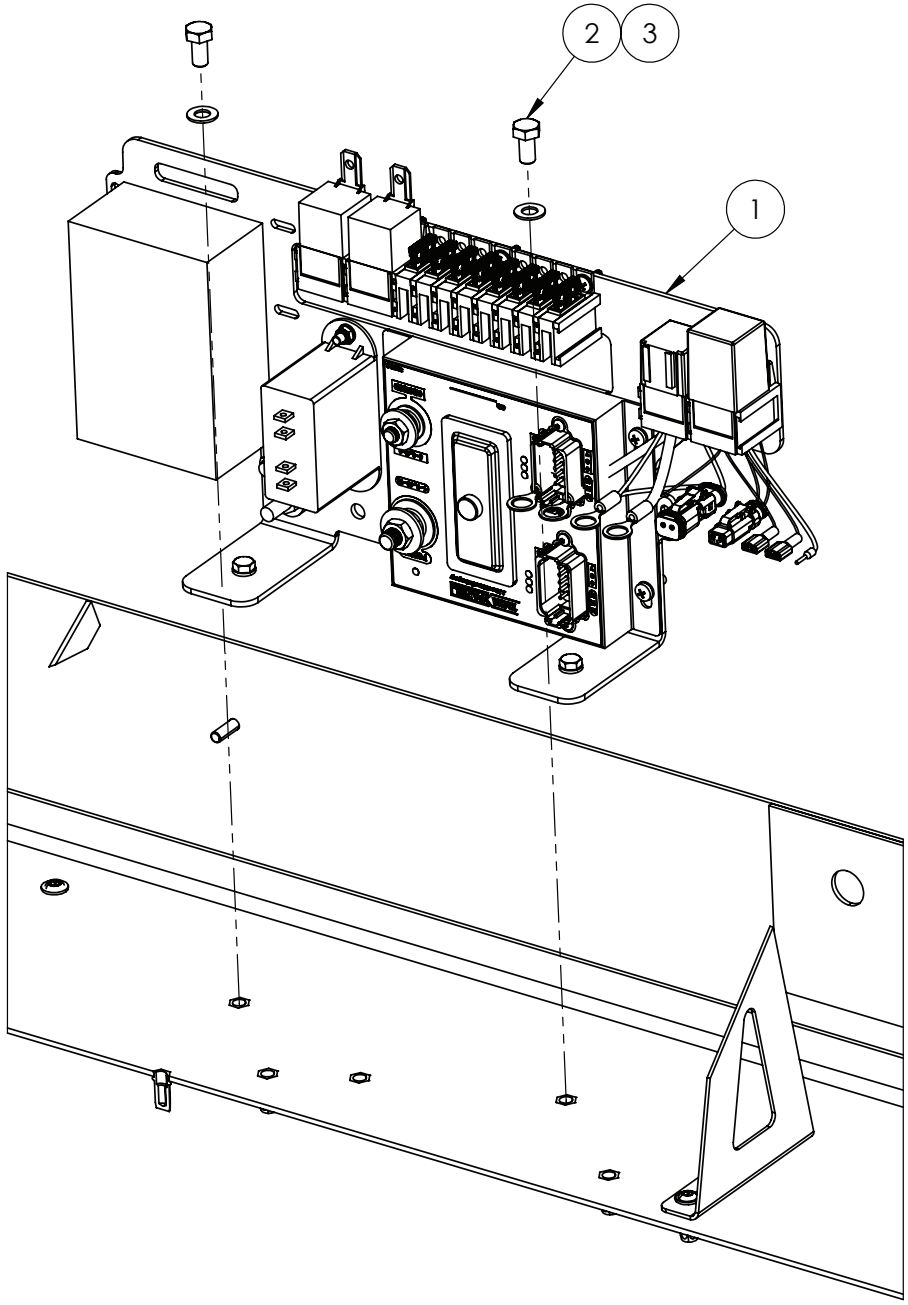

IF DESCRIPTION PREFIX IS ASSEMBLY DRAWING ONLY OR PRODUCTION DRAWING ONLY THE ITEM IS NOT FOR SALE			
ITEM	PART NUMBER	DESCRIPTION	QTY
1	GA4909540	ASSEMBLY DRAWING ONLY, POWER MODULE ASSEM, BILBERRY S3	1
2	GA5011465	SET SCREW M8 X 16 GR8.8 ZP	2
3	GA5003651	WASHER M8 FLAT SS	2
GA6101860 GOLDACRES		CABIN ASSEMBLY, CLAAS X11, LARGE FRAME SP S3, MY25 CONFIGURABLE	REV 01.D

Bilberry Power Board Assembly, Cabin

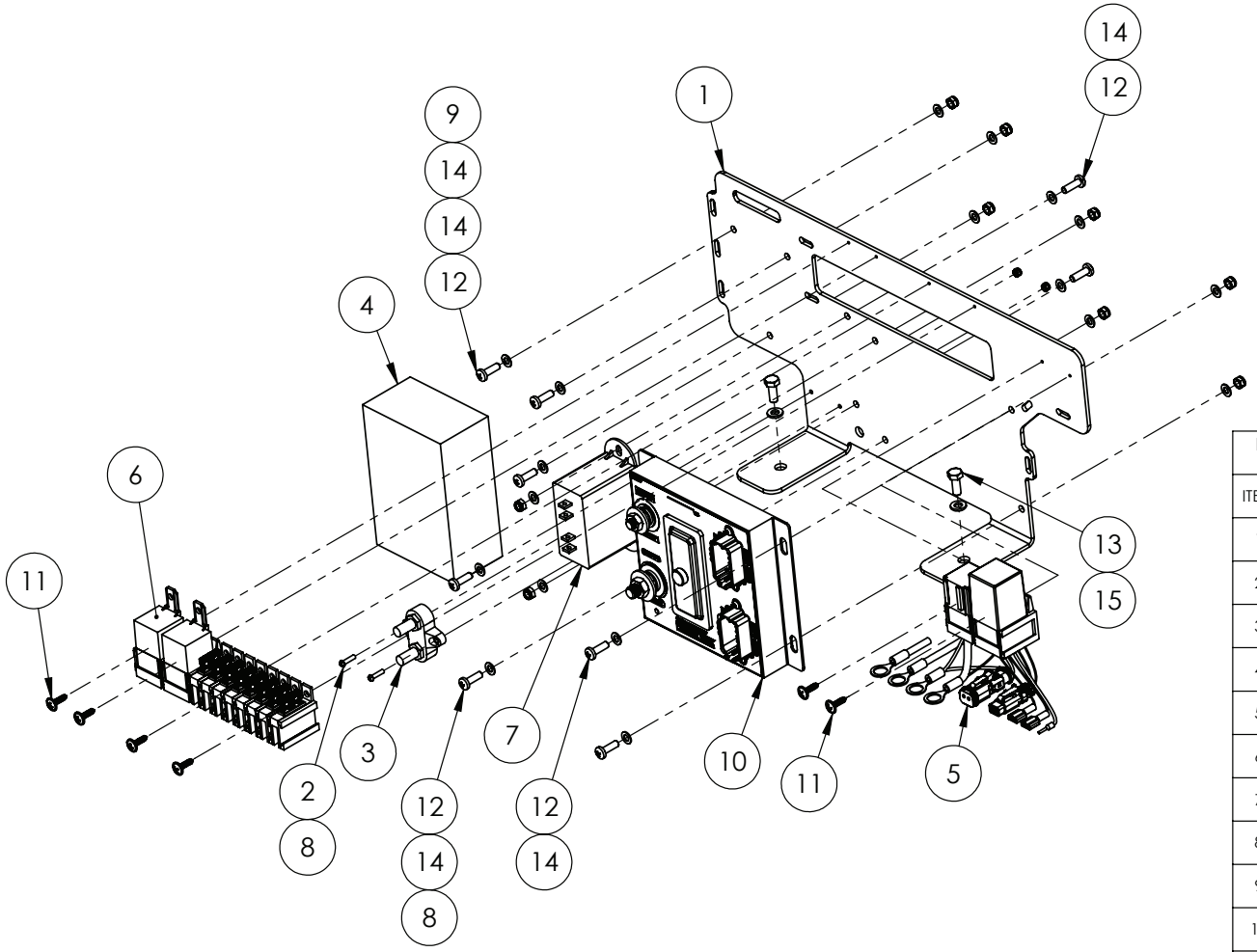

IF DESCRIPTION PREFIX IS ASSEMBLY DRAWING ONLY OR PRODUCTION DRAWING ONLY THE ITEM IS NOT FOR SALE			
ITEM	PART NUMBER	DESCRIPTION	QTY
1	GA4000430	ACC MOUNT, X11 CABIN, FLOOR REAR OF SEAT	1
2	GA5003083	BOLT PAN HEAD M3 X 12	2
3	GA3000319	CONNECTOR, POWER STUD, RED, DUAL 8mm TERMINALS	1
4	GA3001255	DCDC CONVERTER, 24-24V VDC, 72W, BILBERRY, DDI24-24-072, PWR-DC-AT-2424	1
5	GA3000984	ELECTRICAL HARNESS, BILBERRY, MAIN POWER CONTROLLER, (XAVIER POE), PWR-MAI-XPOE-D	1
6	GA3000770	ELECTRICAL HARNESS, MAIN POWER FOR BILBERRY LIGHTS, PWR-AG-MAI-SPT	1
7	GA3001039	LOAD DUMP PROTECTION MODULE, 24V DC, IFM, EC2016	1
8	GA5049465	NUT M3 NYLOC SS	2
9	GA5003974	NUT M5 NYLOC ZP	9
10	GA3000985	PDM, BILBERRY, DUAL POWER SPLITTER, 6 FUSE NOT FITTED, PWR-SPL-MAI-ZZ	1
11	GA5054395	SCREW MUSHROOM HEAD 4.2 X 16mm BLACK SELF TAPPER	6
12	GA5003977	SCREW PAN HEAD M5 X 16 SS A2-70	9
13	GA5011395	SET SCREW M6 X 16 SS A2-70	2
14	GA5003983	WASHER M5 FLAT SS	18
15	GA5004437	WASHER M6 FLAT SS HD	2
GA4909540 GOLDACRES		ASSEMBLY DRAWING ONLY, POWER MODULE ASSEM, BILBERRY S3	REV 00.C

NOTE: ONLY FITTED TO BILBERRY
OPTION CODE: 65211

Steering Column Assembly

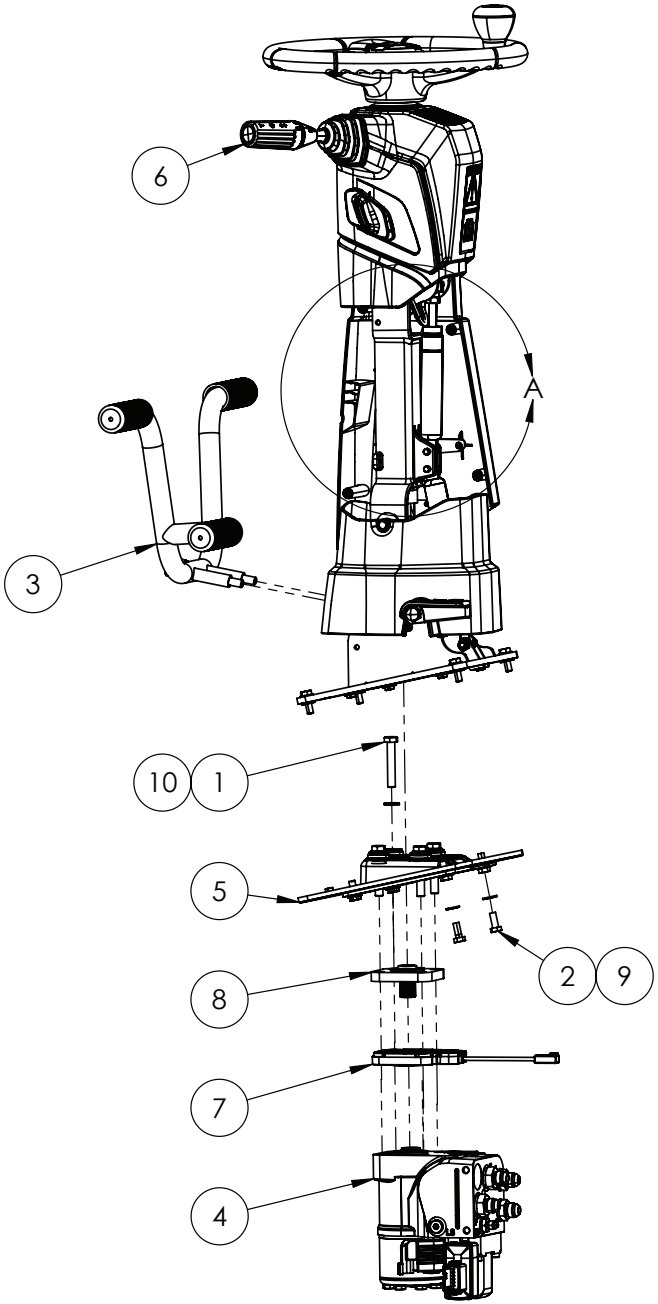

REPLACEMENT PARTS			
ITEM	PART NUMBER	DESCRIPTION	QTY
A	GA5026436	STRUT, CLAAS, STEERING COLUMN, UPPER, 100 SERIES, X11	1
B	GA5026437	STRUT, CLAAS, STEERING COLUMN, LOWER, 100 SERIES, X11	1

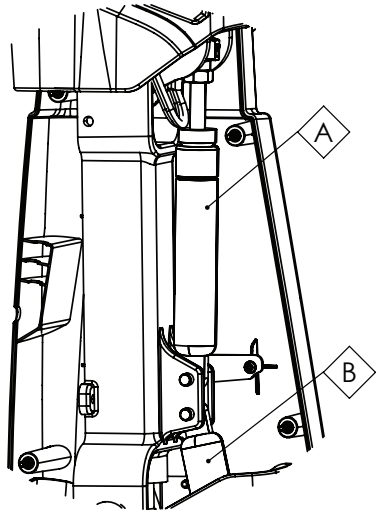

DETAIL A

IF DESCRIPTION PREFIX IS ASSEMBLY DRAWING ONLY OR PRODUCTION DRAWING ONLY THE ITEM IS NOT FOR SALE			
ITEM	PART NUMBER	DESCRIPTION	QTY
1	GA5011175	BOLT M10 X 60 GR8.8 ZP	4
2	GA5004085	BOLT M8 X 20 GR8.8 ZP	4
3	GA4909428	FOOT REST ASSEMBLY X11 CABIN	1
4	GA4909702	HYDRAULIC STEERING CONTROL ASSEMBLY, LF SP S3	1
5	GA5026435	KIT, ADAPTER PLATE, CLAAS, STEERING COLUMN, 100 SERIES, X11	1
6	GA5026438	LEVER, SWITCH, INDICATOR ASSEMBLY, CABIN, CLAAS, X11	1
7	GA3000338	SENSOR, STEERING KICK OUT, SASA, DANFOSS	1
8	GA5078541	SPLINE ADAPTOR, STEERING COLUMN SHAFT, SUIT OSPEC, DANFOSS	1
9	GA5003643	WASHER 8mm FLAT SS HD	4
10	GA5000117	WASHER M10 FLAT SS HD	4
GA6101860 GOLDACRES		CABIN ASSEMBLY, CLAAS X11, LARGE FRAME SP S3, MY25 CONFIGURABLE	REV 01.D

Steering Orbital Assembly

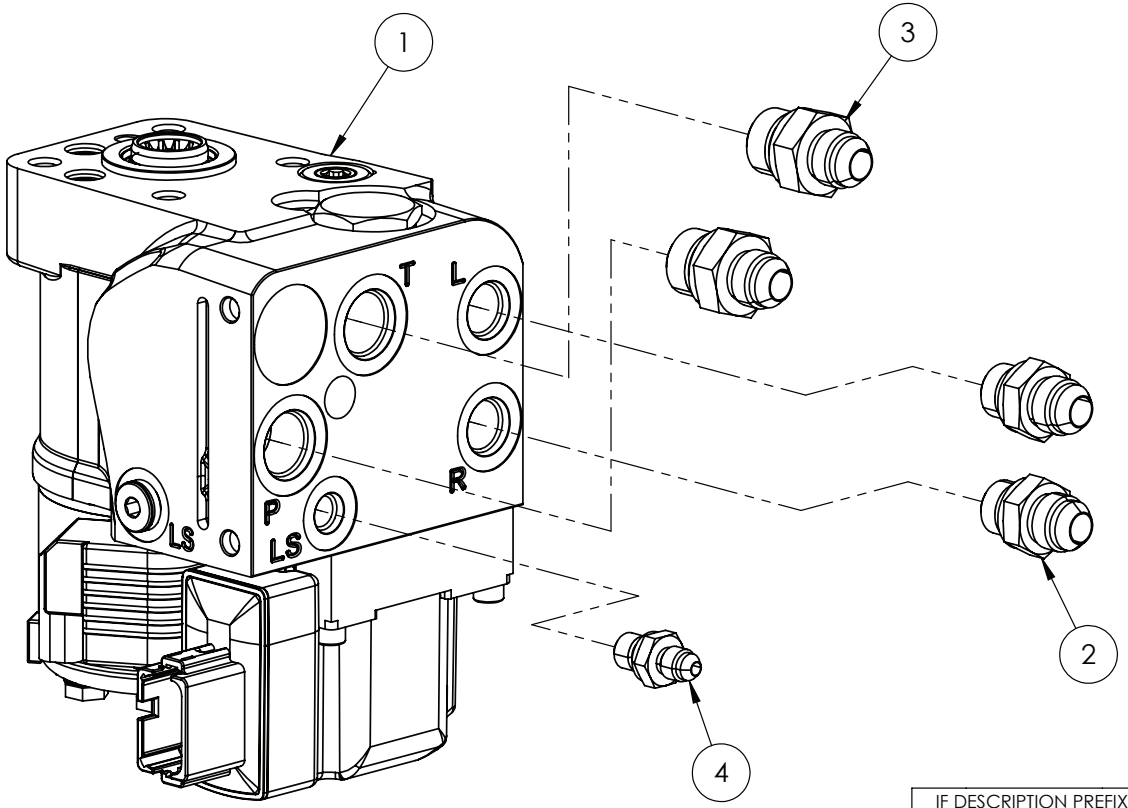

IF DESCRIPTION PREFIX IS ASSEMBLY DRAWING ONLY OR PRODUCTION DRAWING ONLY THE ITEM IS NOT FOR SALE			
ITEM	PART NUMBER	DESCRIPTION	QTY
1	GA3501869	STEERING ORBITAL, 400CC, AUTO STEER, OSPE DANFOSS	1
2	GA3501948	HYDRAULIC ADAPTOR, NIPPLE, 3/4" JIC MALE X M18 X 1.5 MALE - RA1876-1218	2
3	GA3501947	HYDRAULIC ADAPTOR, NIPPLE,3/4" JIC MALE X M22 X 1.5 MALE - RA1876-1222	2
4	GA3501949	RA1876-0912 - HYDRAULIC ADAPTOR, NIPPLE, 9/16" JIC MALE X M12 X 1.5 MALE	1
GA4909702 GOLDACRES		HYDRAULIC STEERING CONTROL ASSEMBLY, LF SP S3	REV 00

Foot Rest Assembly, Cabin

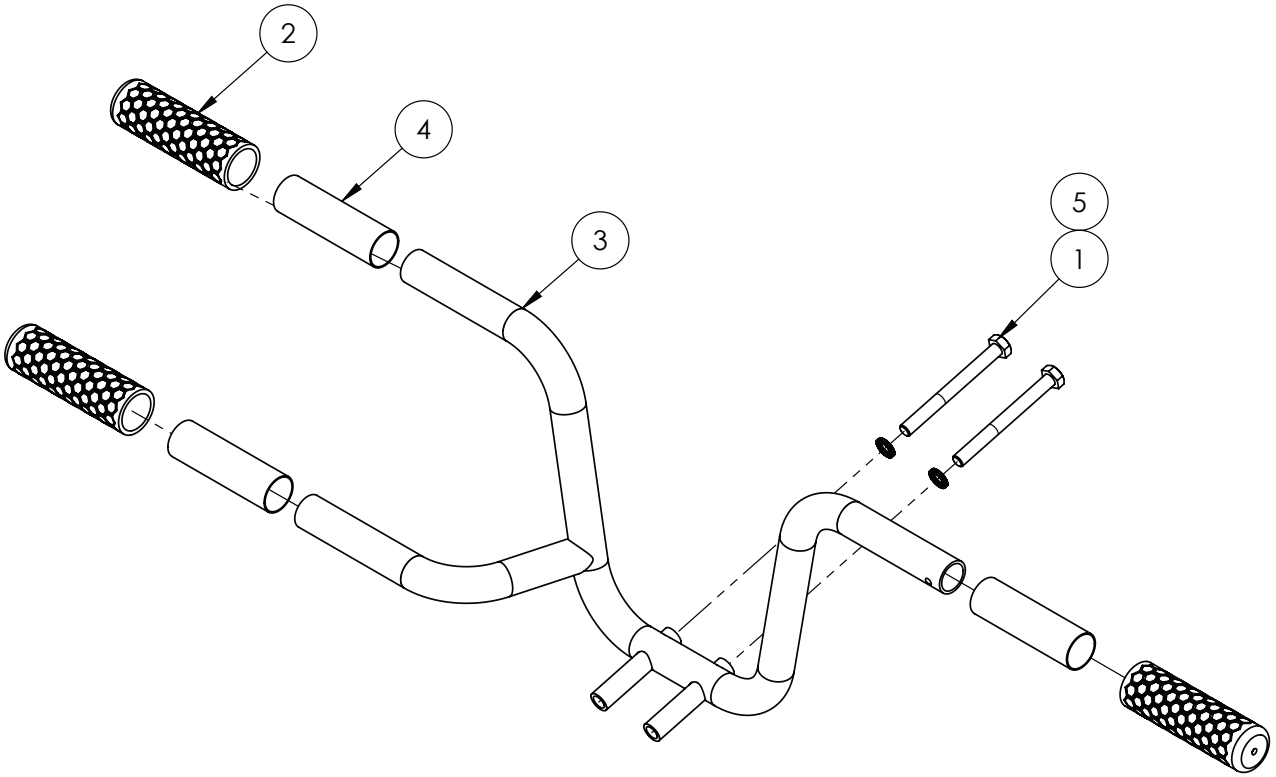

IF DESCRIPTION PREFIX IS ASSEMBLY DRAWING ONLY OR PRODUCTION DRAWING ONLY THE ITEM IS NOT FOR SALE			
ITEM	PART NUMBER	DESCRIPTION	QTY
1	GA5006091	BOLT M10 X 100 GR8.8 ZP	2
2	GA5025894	FOOT REST RUBBER GRIP 30mm ID, 115mm LONG, HONEYCOMB, BLACK	3
3	GA4605001	FOOT REST, CLAAS CABIN X11 STEERING COLUMN, BOLT ON	1
4	GA4800035	HEAT SHRINK, 39mm, BLACK, GLUED, GA5072205 CUT 115mm	3
5	GA5025270	WASHER, 10mm, NORD LOCKING, LOD	2
GA4909428 GOLDACRES		FOOT REST ASSEMBLY X11 CABIN	REV 00

Rear Wall, Outside, Cabin

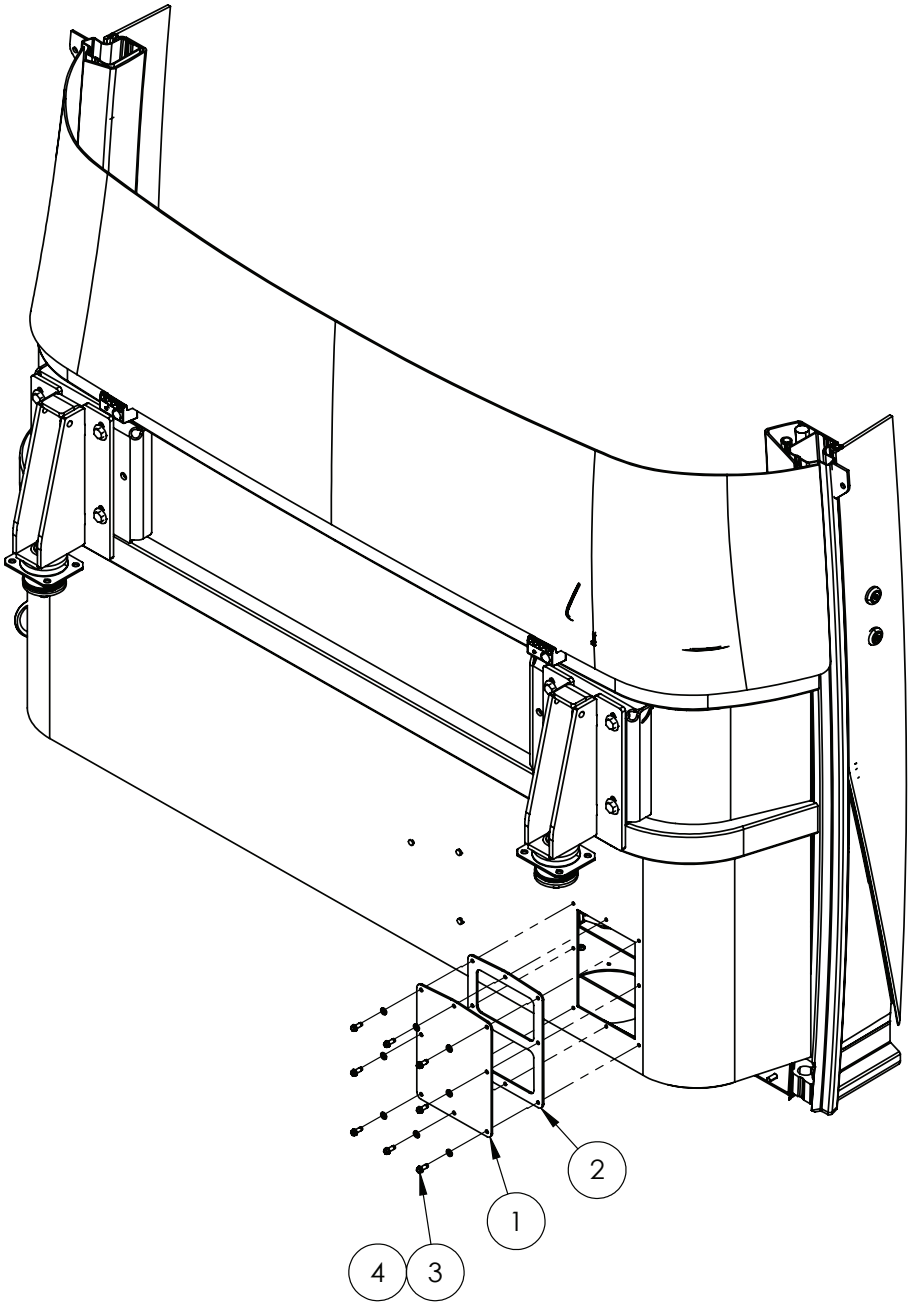

IF DESCRIPTION PREFIX IS ASSEMBLY DRAWING ONLY OR PRODUCTION DRAWING ONLY THE ITEM IS NOT FOR SALE			
ITEM	PART NUMBER	DESCRIPTION	QTY
1	GA4525330	COVER PLATE, REAR WALL, BLANK, X11 CABIN	1
2	GA4525335	GASKET, REAR WALL ELECTRICAL ACCESS SEAL, X11 CABIN	1
3	GA0500022	SET SCREW SELF TAPPING TRILOBE M6 X 16 ZP	8
4	GA5004437	WASHER M6 FLAT SS HD	8
GA6101860 GOLDACRES		CABIN ASSEMBLY, CLAAS X11, LARGE FRAME SP S3, MY25 CONFIGURABLE	REV 01.D

Under Floor, Cabin

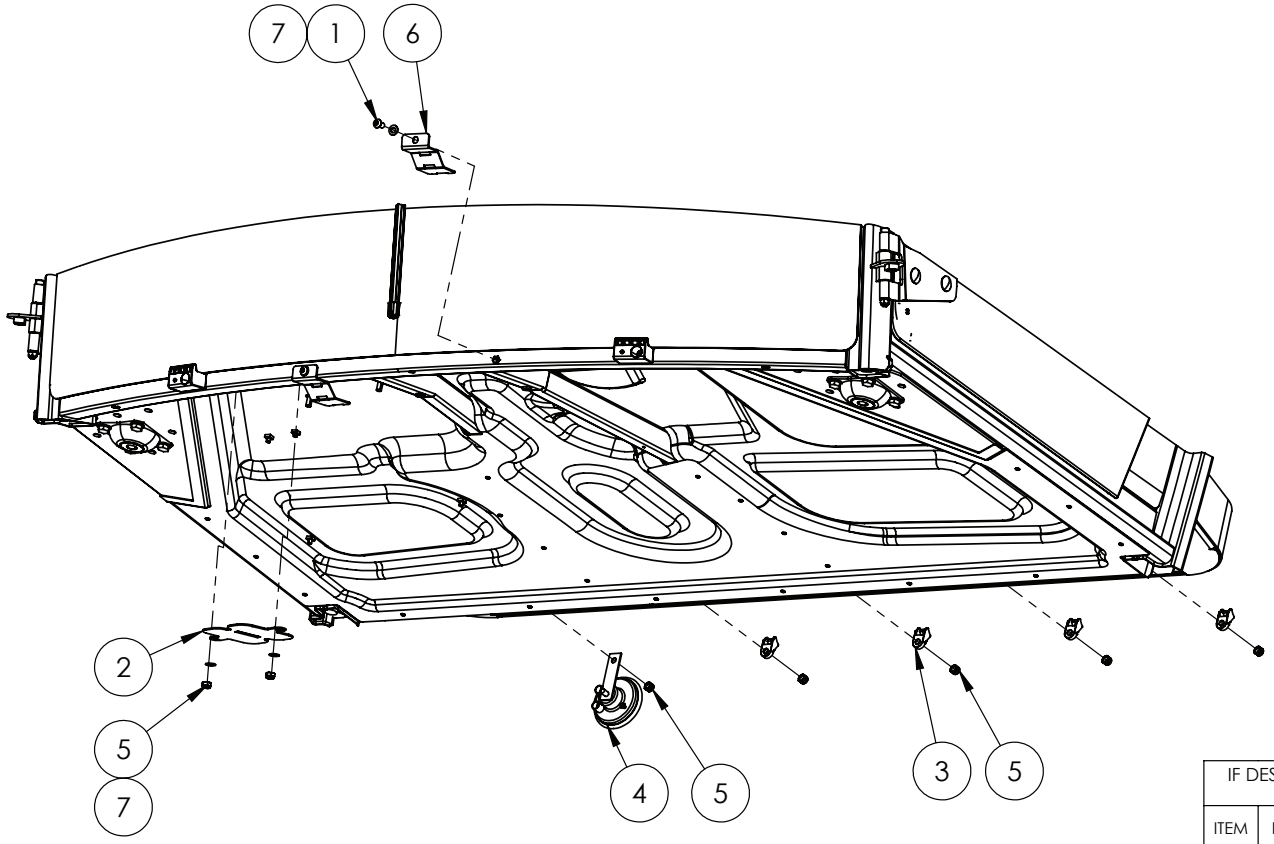

IF DESCRIPTION PREFIX IS ASSEMBLY DRAWING ONLY OR PRODUCTION DRAWING ONLY THE ITEM IS NOT FOR SALE			
ITEM	PART NUMBER	DESCRIPTION	QTY
1	GA5004696	BHCS M8 X 16 SS A2-70	2
2	GA4000494	COVER PLATE, CLAAS CABIN X11 PEDAL CUTOUT	1
3	GA5026172	HARNESS CLIP, 36mm X 19mm M8 HOLE HI-IMPACT UV BK	4
4	GA5011983	HORN, 12V NARVA, 72517	1
5	GA5004917	NUT M8 NYLOC ZP	7
6	GA4000497	UNDER CABIN SUPPORT BRACKET, SUIT CLAAS X11	2
7	GA5003651	WASHER M8 FLAT SS	4
GA6101860		CABIN ASSEMBLY, CLAAS X11, LARGE FRAME SP S3, MY25 CONFIGURABLE	REV 01_D

Pedal Assembly

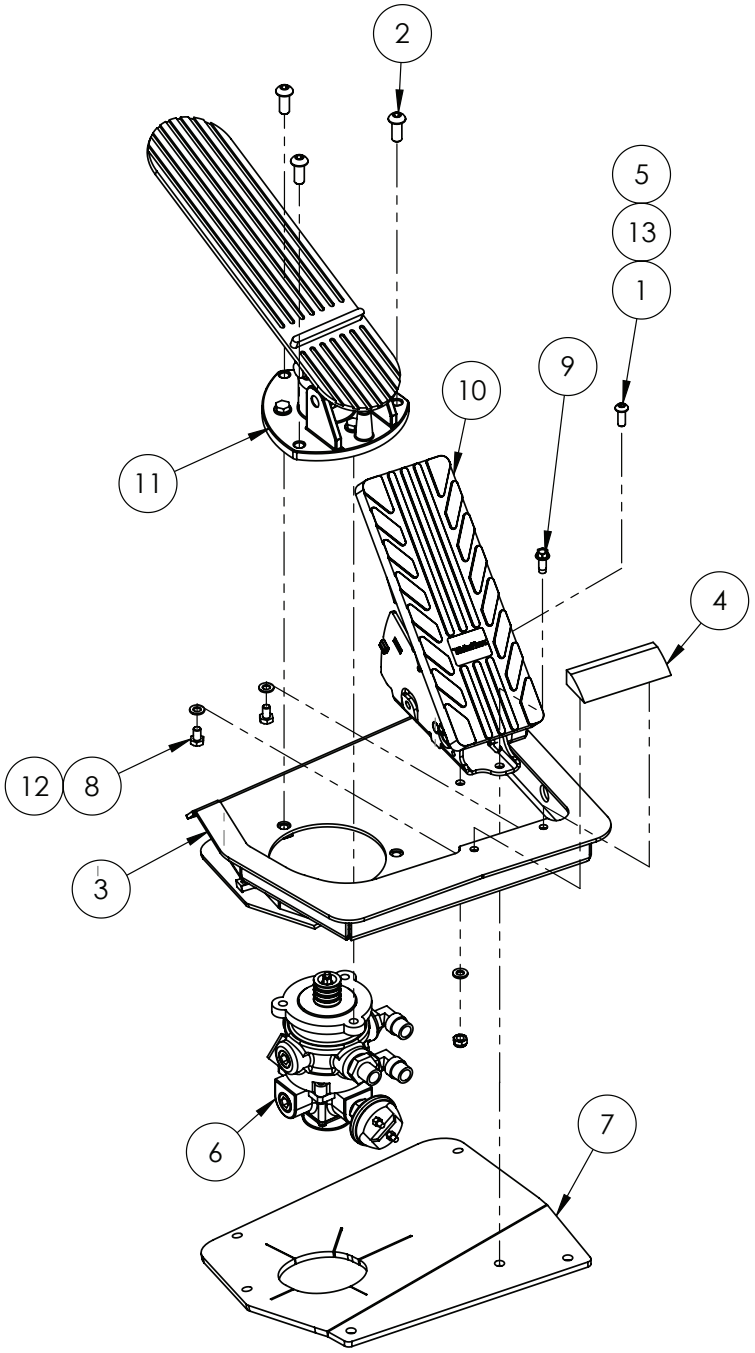

IF DESCRIPTION PREFIX IS ASSEMBLY DRAWING ONLY OR PRODUCTION DRAWING ONLY THE ITEM IS NOT FOR SALE			
ITEM	PART NUMBER	DESCRIPTION	QTY
1	GA5004050	BHCS M6 X 16 SS A2-70	1
2	GA0500102	BHCS M8 X 20 SS A2-70	3
3	GA4604980	FRAME, PEDDEL BOX, CLASS X11 CAB, PNEUMATIC BRAKE, LARGE FRAME S3, MY25	1
4	GA4583745	HEAL REST, PEDDEL BOX, CLASS X11 CAB, PNEUMATIC BRAKE, LARGE FRAME S3, MY25	1
5	GA5004429	NUT M6 NYLOC SS	1
6	GA4954205	PRODUCTION DRAWING ONLY, BRAKE UNIT, AIR ACTUATED, PEDDAL OPERATED, LARGE FRAME S3	1
7	GA4000823	SEAL, PEDEL BOX MOUNTING FLANGE, CLASS X11 CAB 5mm EPDM	1
8	GA5004029	SET SCREW M6 X 10 GR8.8 ZP	2
9	GA0500022	SET SCREW SELF TAPPING TRILOBE M6 X 16 ZP	1
10	GA5065460	THROTTLE PEDAL ELECTRONIC, FOOT, WITH IDLE VALIDATION	1
11	GA5016965	TREADLE ASSEMBLY, BRAKE PEDAL, AIR	1
12	GA5004437	WASHER 6mm FLAT SS	2
13	GA5004437	WASHER M6 FLAT SS HD	1
GA4954210 GOLDACRES		ASSEMBLY DRAWING ONLY, PEDAL BOX, X11 CLAAS CAB, AIR OPERATED BRAKES, LARGE FRAME S3	REV 00

Brake Unit, Foot Valve Assembly, Air Actuated

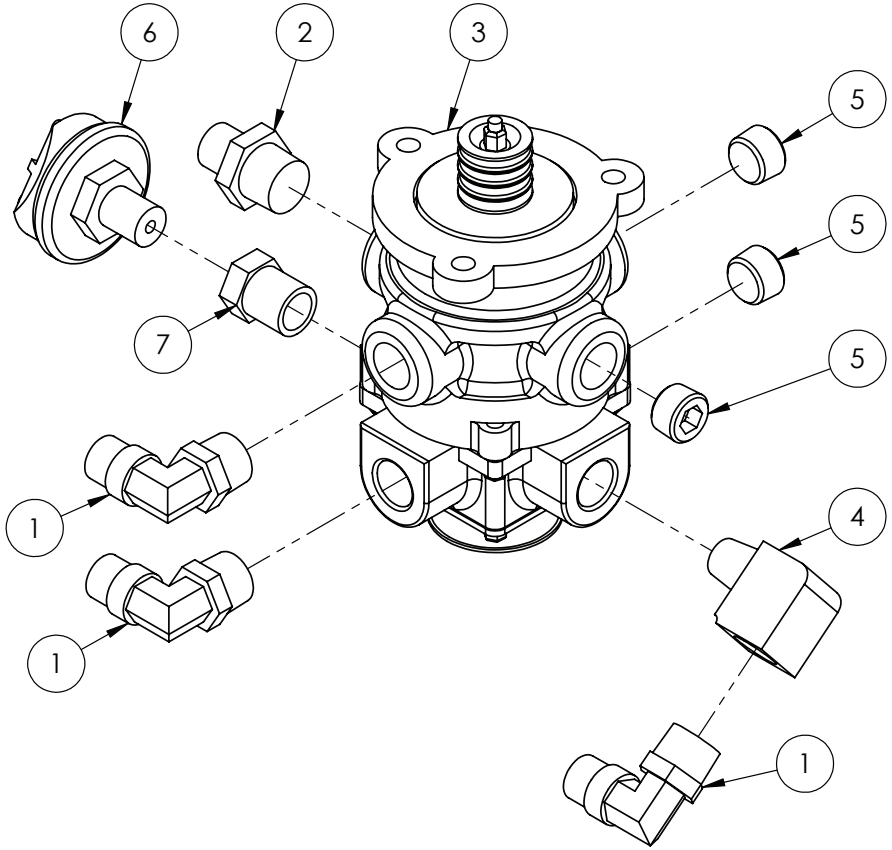

IF DESCRIPTION PREFIX IS ASSEMBLY DRAWING ONLY OR PRODUCTION DRAWING ONLY THE ITEM IS NOT FOR SALE			
ITEM	PART NUMBER	DESCRIPTION	QTY
1	GA5078676	AIR FITTING, ELBOW, SWIVEL, 3/8" TUBE, 3/8" NPT MALE, PUSH IN, BRASS, ALKON - AQ69-DOTS-6X6	3
2	GA5078674	AIR FITTING, STRAIGHT, 3/8" TUBE, 3/8" NPT MALE, PUSH IN, BRASS, ALKON - AQ68-DOT-6X6	1
3	GA5005769	BASIC FOOT VALVE, DUAL CIRCUIT	1
4	GA5079026	BRASS ELBOW, FEMALE 3/8", MALE 3/8", NPT, 233569	1
5	GA5078990	PLUG, 3/8 NPT, FLUSH MOUNT, ALLEN KEY, 10AL-6	3
6	GA5016081	PRESSURE SWITCH, STOP LIGHT, 3-5 PSI ACTUATION, NORMALLY OPEN, SPST, 1/4"	1
7	GA5049700	REDUCING BUSH 1/4" X 3/8"	1
GA4954205 GOLDACRES		PRODUCTION DRAWING ONLY, BRAKE UNIT, AIR ACTUATED, PEDDAL OPERATED, LARGE FRAME S3	REV 00

Seat, Claas, X11, Parts Breakdown

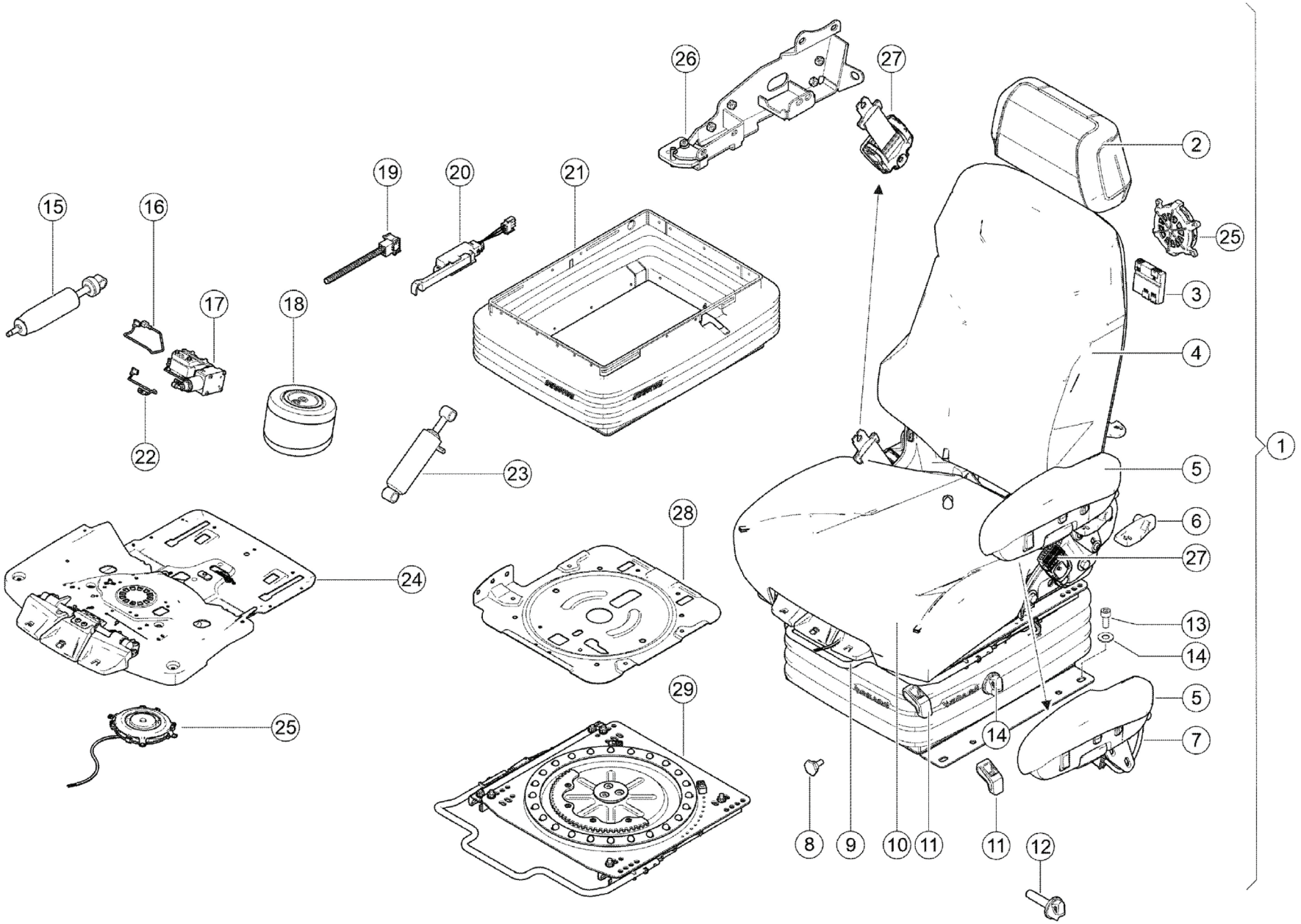

GA5026543	SEAT, LEATHER, 12V, CABIN, CLAAS X11, UP TO S/N X1100564	REV 00

SEAT, LEATHER, 12V, CABIN, CLAAS X11

1	GA5026543	SEAT, LEATHER, 12V, CABIN, CLAAS X11	15	GA5026555	SHOCK ABSORBER, SEAT, CLAAS X11
	GA5026593	SEAT, LEATHER, 12V, CABIN, CLAAS X11, FROM S/N X1100565	16	GA5026556	WIRE, COMPRESSOR, NEGATIVE, SEAT, CLAAS X11
2	GA5026544	HEADREST, SEAT, CABIN, CLAAS X11	17	GA5026557	KIT, SOLENOID VALVE, 12V, SEAT, CLAAS X11
3	GA5026545	MODULE, HVS, SEAT, CABIN, CLAAS X11, (INCLUDES HARNESS)	18	GA5026558	AIR BAG, COMPRESSOR, 12V, SEAT, CLAAS X11
4	GA5026546	BACK REST, SEAT, CABIN, CLAAS X11	19	GA5026559	HARNESS, MAIN POWER, SEAT, CLAAS X11
5	GA5026708	ARMREST, SEAT, CABIN, CLAAS X11, SUIT, "30690880", GA5026543	20	GA5026560	SWITCH, LIMIT, 12V, SEAT, CLAAS X11
6	GA5026548	HANDLE, RECLINE, SEAT, CLAAS X11	21	GA5026561	BELLOWS, SEAT, CLAAS X11
7	GA5026709	WIRING LOOM, ARMREST, SEAT, CLAAS, X11	22	GA5026562	WIRE, COMPRESSOR, POSITIVE, SEAT, CLAAS X11
8	GA5026710	PIN, SWIVEL LATCH, SEAT, CLAAS, X11	23	GA5026563	SHOCK ABSORBER, DAMPER, SEAT, CLAAS X11
9	GA5026550	ADJUSTMENT PANEL, SLIDE & SPACER KIT, SEAT, CLAAS X11	24	GA5026564	PLATE, BASE, SEAT, CLAAS X11
10	GA5026551	CUSHION, SEAT, 12V, CLAAS X11	25	GA5026565	FAN, SEAT, CLASS X11
11	GA5026552	SWITCH, ISOLATOR KNOB, SEAT, CLAAS X11	26	GA5026711	BRACKET, SUPPORT, SEAT CLAAS, X11
12	GA5026554	SWITCH, DAMPER KNOB, SEAT, CLAAS X11	27	GA5026712	SEAT BELT, CLAAS, X11, SUIT, 0030690880
13	GA5004707	SHCS M8 X 20 GR12.9 ZP	28	GA5026713	SWIVEL RACE, UPPER, SEAT, CLAAS, X11
14	GA5003643	WASHER M8 FLAT SS HD	29	GA5026714	SWIVEL RACE, LOWER, SEAT, CLAAS, X11

GA5026543 GOLDACRES	SEAT, LEATHER, 12V, CABIN, CLAAS X11, UP TO S/N X1100564	REV 00

20 - N.I.R Weedetect

N.I.R, Sensor & Poly Centre Mount, Centre Section

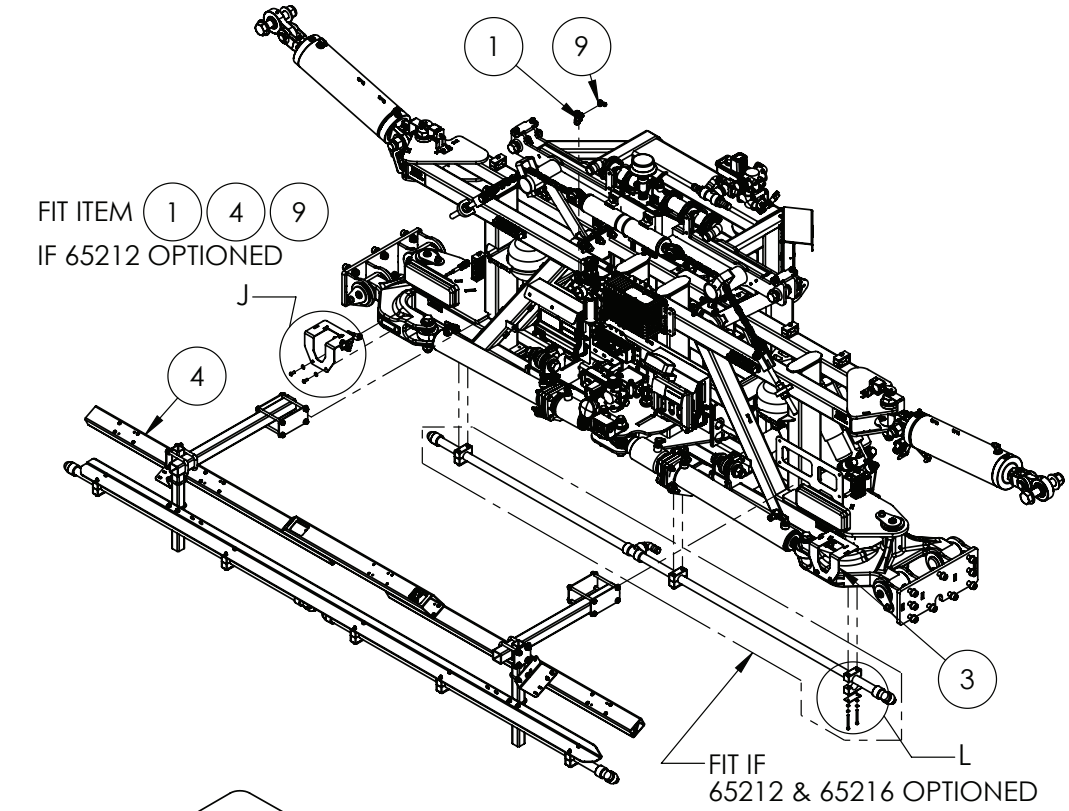

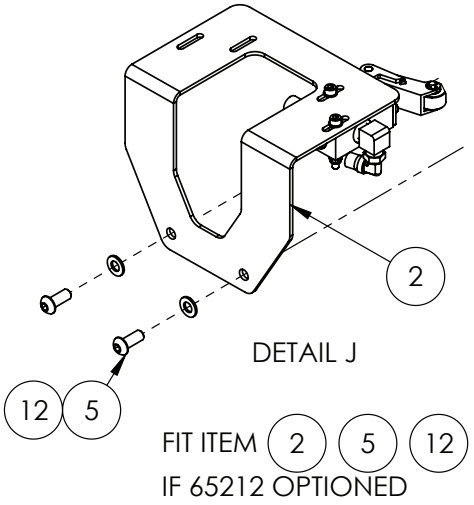

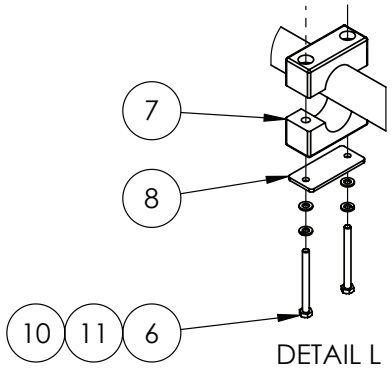

IF DESCRIPTION PREFIX IS ASSEMBLY DRAWING ONLY OR PRODUCTION DRAWING ONLY THE ITEM IS NOT FOR SALE			
ITEM	PART NUMBER	DESCRIPTION	QTY.
1	GA7000108	AIR FITTING, TEE 12mm X 12mm X 6mm TUBE, PUSH IN, PLASTIC, PISCO - PEG12-6	1
2	GA4909647	ASSEMBLY DRAWING ONLY, MECHANICAL / PNEUMATIC SWITCH, OPTRONIA	1
3	GA4909647	ASSEMBLY DRAWING ONLY, MECHANICAL / PNEUMATIC SWITCH, OPTRONIA	1
4	GA4909569	ASSEMBLY DRAWING ONLY, CAMERA & POLY CENTRE MOUNT, OPTRONIA	1
5	GA0500102	BHCS M8 X 20 SS A2-70	4
6	GA5050175	BOLT M6 X 65 GR8.8 ZP	10
7	GA3500699	MOUNTING CLAMP, SINGLE TYPE, JAW, PAIR, GROUP 5, 33.7mm, RCS-33.5J	5
8	GA5078075	MOUNTING CLAMP, SINGLE TYPE, PLATE, TOP, GROUP 5, RCS-5PT	5
9	GA5016245	TEE, EQUAL, 6mm PUSH IN TYPE, BLACK PLASTIC	1
10	GA5004437	WASHER M6 FLAT SS HD	10
11	GA5004447	WASHER M6 SPRING SS	10
12	GA5003643	WASHER M8 FLAT SS HD	4
GA6101940-16 GOLDACRES		ASSEMBLY DRAWING ONLY, CENTRE AND PARALIFT REAR, LF SP S3, MY25	REV 00.A

N.I.R Sensor & Poly Centre Mount Assembly, Centre Section

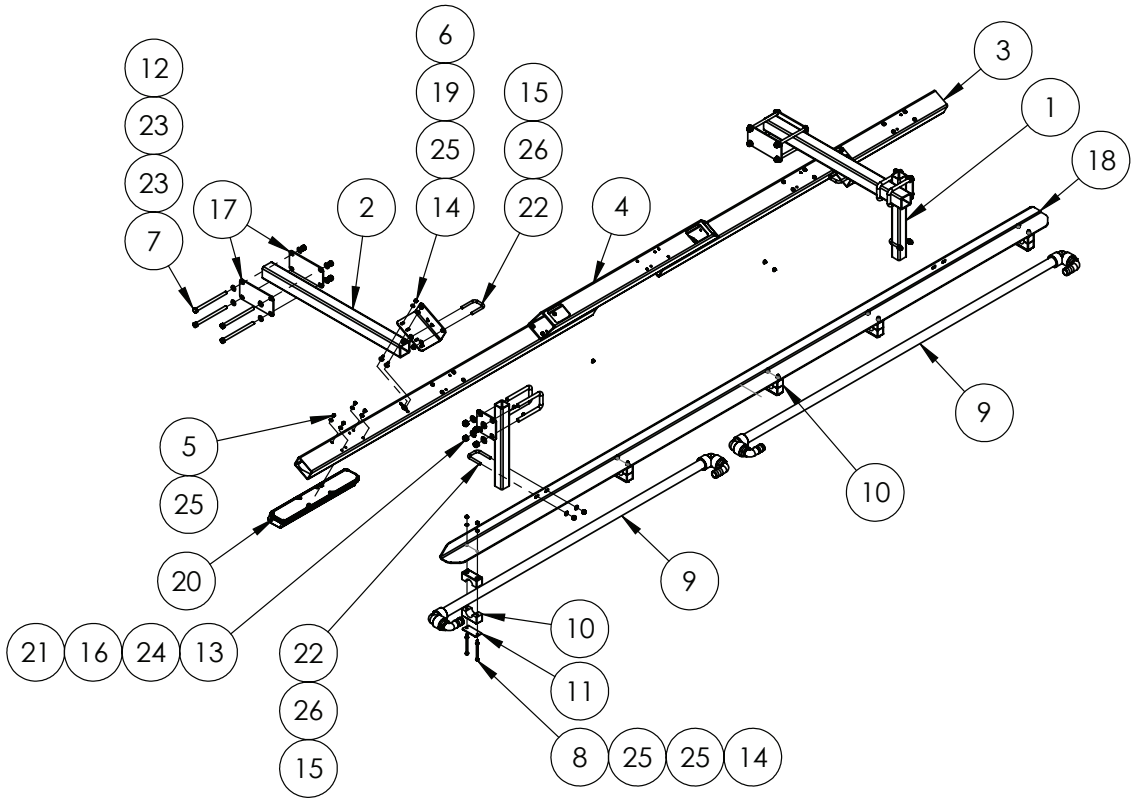

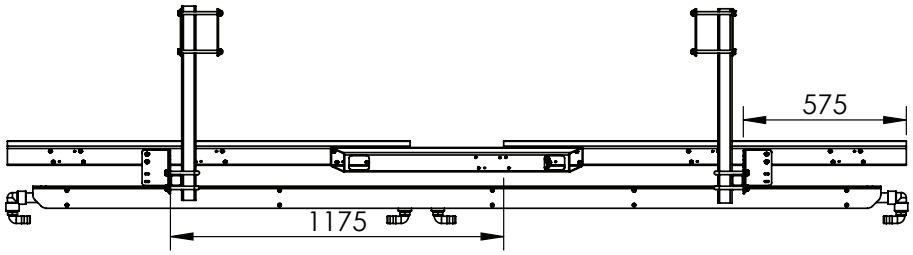

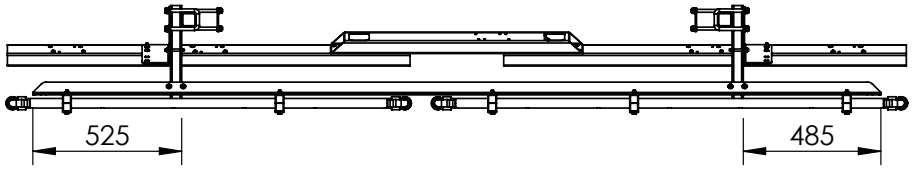

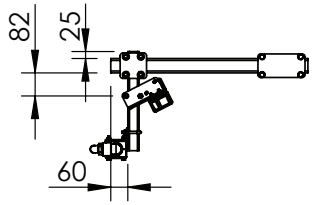

IF DESCRIPTION PREFIX IS ASSEMBLY DRAWING ONLY OR PRODUCTION DRAWING ONLY THE ITEM IS NOT FOR SALE			
ITEM	PART NUMBER	DESCRIPTION	QTY
1	GA4800120	ALUMINIUM RHS, 40 X 40 X 3mm, CUT 350mm SC	2
2	GA4800119	ALUMINIUM RHS, 50 X 50 X 4mm, CUT 685mm SC	2
3	GA4800156	ALUMINIUM RHS, 75X 50 X 3mm, CUT RTD	2
4	GA4800167	ALUMINIUM RHS, 75X 50 X 3mm, CUT RTD	1
5	GA5004023	BHCS M6 X 10 SS A2-70	24
6	GA0500197	BOLT CUP HEAD M6 X 20 SS A4-70	4
7	GA5006093	BOLT M10 X 150 GR8.8 ZP	8
8	GA5011439	BOLT M6 X 80 GR8.8 ZP	10
9	GA4909697	BOOM POLY ASSEMBLY, BARE, CENTRE SECTION, DRILLED 250mm, TRITECH S	1
10	GA3500699	MOUNTING CLAMP, SINGLE TYPE, JAW, PAIR, GROUP 5, 33.7mm, RCS-33.5J	5
11	GA5078075	MOUNTING CLAMP, SINGLE TYPE, PLATE, TOP, GROUP 5, RCS-5PT	5
12	GA5000141	NUT M10 NYLOC ZP	8
13	GA5012461	NUT M12 NYLOC ZP	8
14	GA5048115	NUT M6 NYLOC ZP	14
15	GA5052590	NUT M8 NYLOC SS	8
16	GA4000473	PLATE, 40 - 50 RHS CLAMP, OPTRONIA	2
17	GA4000471	PLATE, CENTER MOUNT CLAMP, OPTRONIA	4
18	GA4000477	PLATE, POLY CLAMP MOUNT, OPTRONIA	1
19	GA4000535	PLATE, SENSOR RAIL MOUNT, CENTRE, OPTRONIA	2
20	GA3001303	SENSOR, DUAL OUTPUT, OPTRONIA	7
21	GA5011259	U BOLT SQUARE TOP M12 X 76mm X 110mm	4
22	GA0500084	U BOLT SQUARE TOP M8 X 42 X 65, 304 SS	4
23	GA5000117	WASHER M10 FLAT SS HD	16
24	GA5000577	WASHER M12 FLAT SS HD	8
25	GA5004437	WASHER M6 FLAT SS HD	48
26	GA5003643	WASHER M8 FLAT SS HD	8
GA4909569 GOLDACRES		ASSEMBLY DRAWING ONLY, CAMERA & POLY CENTRE MOUNT, OPTRONIA	REV 00

N.I.R, Mechanical Pneumatic Switch Assembly, Centre Section

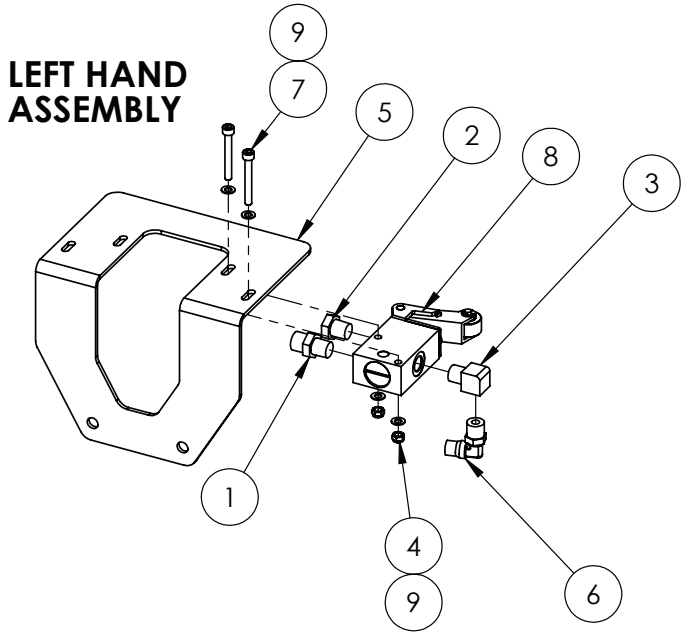

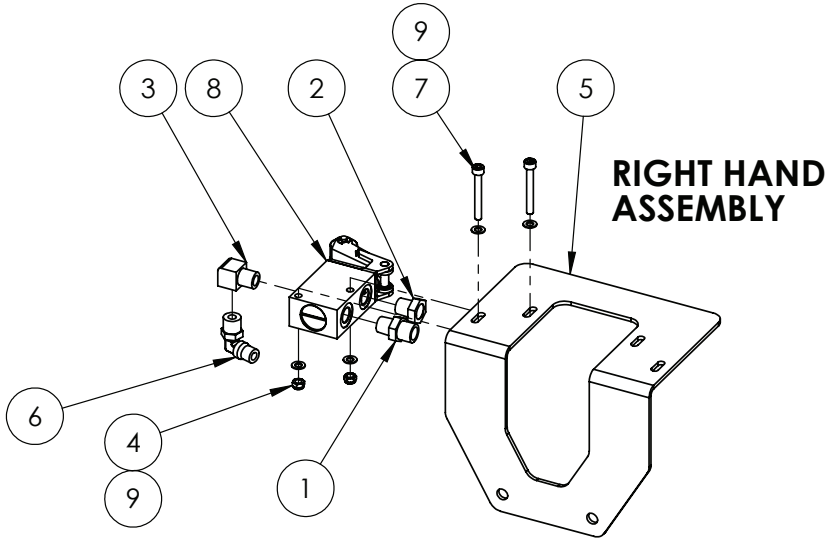

IF DESCRIPTION PREFIX IS ASSEMBLY DRAWING ONLY OR PRODUCTION DRAWING ONLY THE ITEM IS NOT FOR SALE			
ITEM	PART NUMBER	DESCRIPTION	QTY.
1	GA5078675	AIR FITTING, STRAIGHT, 6mm TUBE, 1/4" NPT MALE, PUSH IN, BRASS, ALKON - MAQ68-DOT-6X4	1
2	GA5071207	BREATHER, SILENCER, 1/4 BUTTON	1
3	GA5048305	ELBOW, 90 DEGREE, 1/4" BSP MALE X 1/4" BSP FEMALE, BRASS	1
4	GA5003974	NUT M5 NYLOC ZP	2
5	GA4000687	PLATE, VALVE MOUNT, ACTIVATION SWITCH, OPTRONIA	1
6	GA5016233	PNEUMATIC FITTING, ELBOW, 90 DEGREE, 1/4 BSP MALE X 6mm PUSH IN TYPE, METAL	1
7	GA5003603	SHCS M5 X 40 GR12.9 ZP	2
8	GA7000123	VALVE, PNEUMATIC/MECHANICAL, 1/4" ROLLER CAM/SPRING, 3/2 NORMALLY CLOSED,	1
9	GA5003983	WASHER M5 FLAT SS	4
GA4909647 GOLDACRES		ASSEMBLY DRAWING ONLY, MECHANICAL / PNEUMATIC SWITCH, OPTRONIA	REV 00

21 - Bilberry

Bilberry Module, Ethernet Switch & PLC Mounting

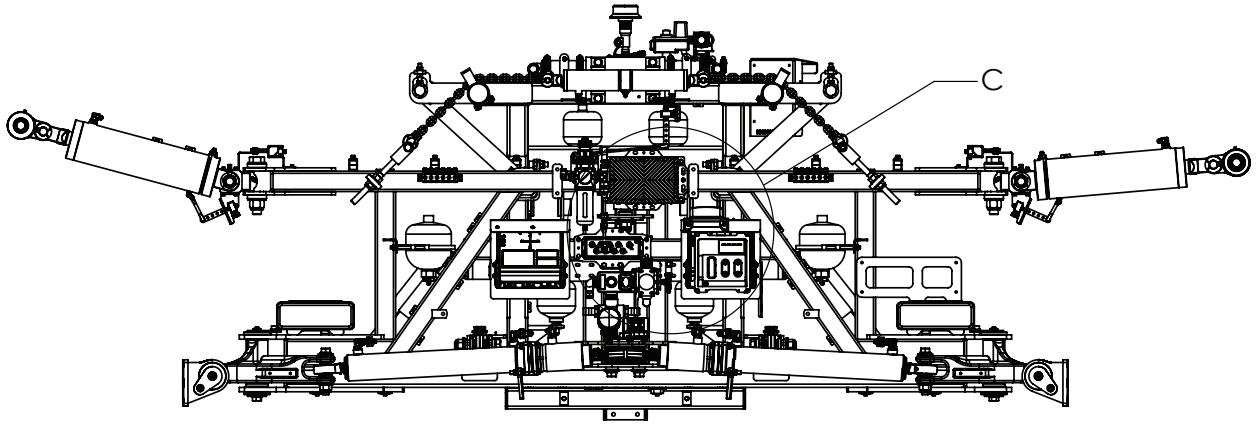

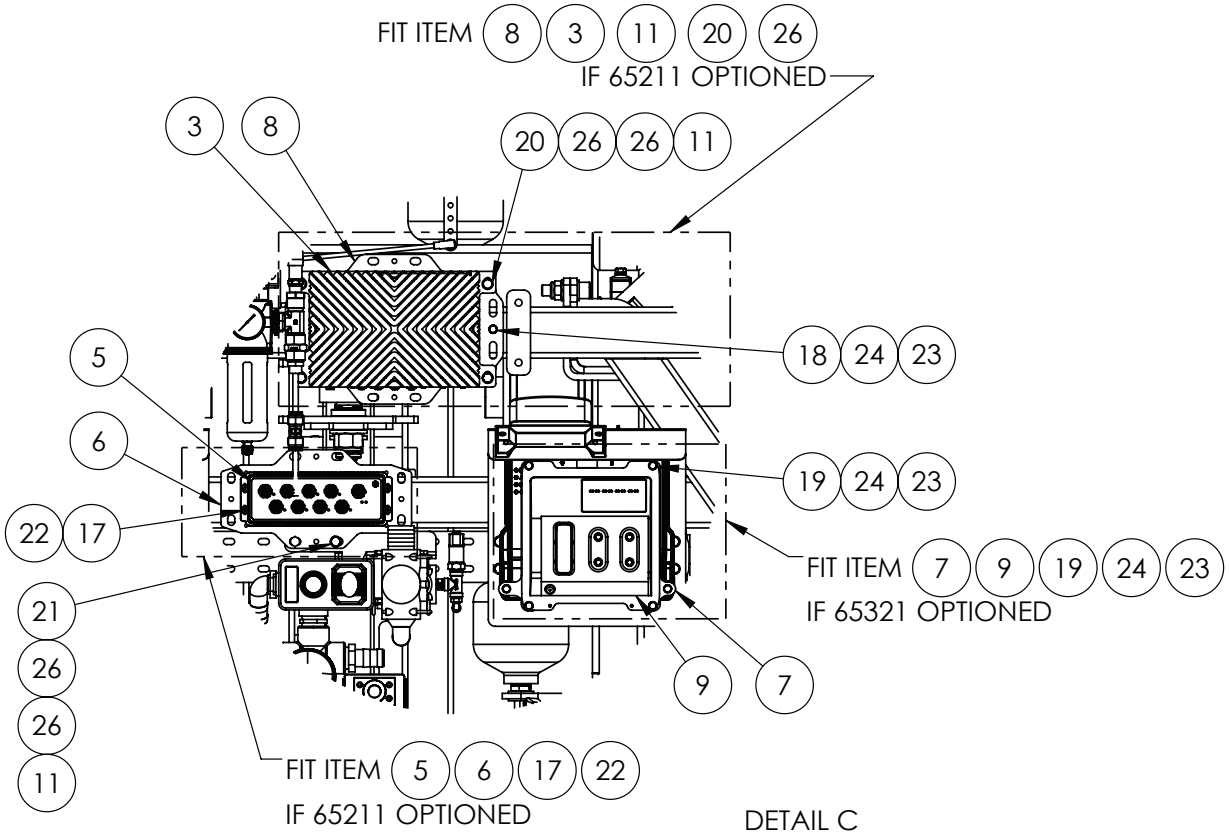

IF DESCRIPTION PREFIX IS ASSEMBLY DRAWING ONLY OR PRODUCTION DRAWING ONLY THE ITEM IS NOT FOR SALE			
ITEM	PART NUMBER	DESCRIPTION	QTY
3	GA3001061	CALC MODULE, RUGGED COMPUTER, AI EDGE, SYSLOGIC XAVIER, POE RML, IP67, NUMBER 1, BILBERRY, COM-AG-SYS-XAV2	1
5	GA3000983	ETHERNET SWITCH, BILBERRY, IP65, 8 PORT, 10/100/1000BASE, M12 X-CODED KYLAND AQUAM, SWI-AG-POE-GN3	1
6	GA4525060	MOUNT PLATE, CALCULATION MODULE GEN 2, SWITCH GEN 3 BILBERRY CAMERA SYSTEM	1
7	GA4525245	MOUNTING PLATE, NOZZLE CONTROLLER PLC MOUNT SUIT RCM	1
8	GA4525065	MOUNTING PLATE, SWITCH MODULE GEN 2, CALC MODULE GEN 4, BILBERRY	1
9	GA3000785	NOZZLE CONTROLLER, PLC CR711S, IFM, RCM TO BILBERRY LINK	1
11	GA5052590	NUT M8 NYLOC SS	5
17	GA0500099	SCREW PAN HEAD M5 X 10 SS A2-70	4
18	GA5004065	SET SCREW M6 X 20 GR8.8 ZP	4
19	GA5004073	SET SCREW M6 X 25 GR8.8 ZP	4
20	GA5004085	SET SCREW M8 X 20 GR8.8 ZP	4
21	GA5004711	SET SCREW M8 X 25 GR8.8 ZP	5
22	GA5003983	WASHER M5 FLAT SS	4
23	GA5004437	WASHER M6 FLAT SS HD	16
24	GA5004447	WASHER M6 SPRING SS	6
26	GA5003651	WASHER M8 FLAT SS	10
GA6101940-13 GOLDACRES		ASSEMBLY DRAWING ONLY, CENTRE AND PARALIFT REAR, LF SP S3, MY25	REV 00

Front Camera Mounting Arm, Bilberry, LH

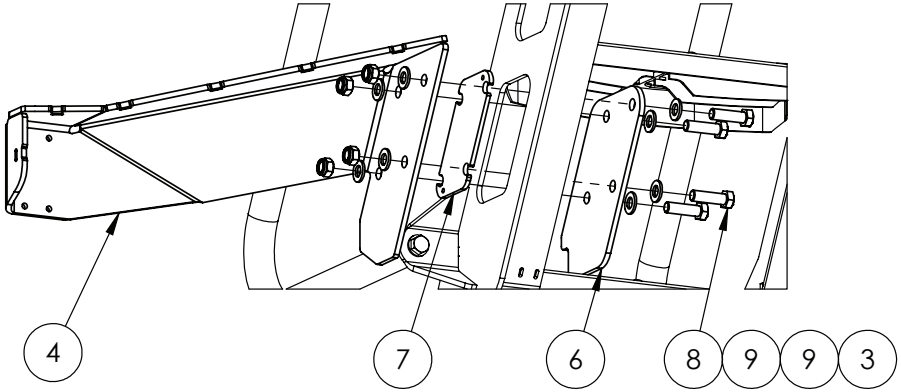

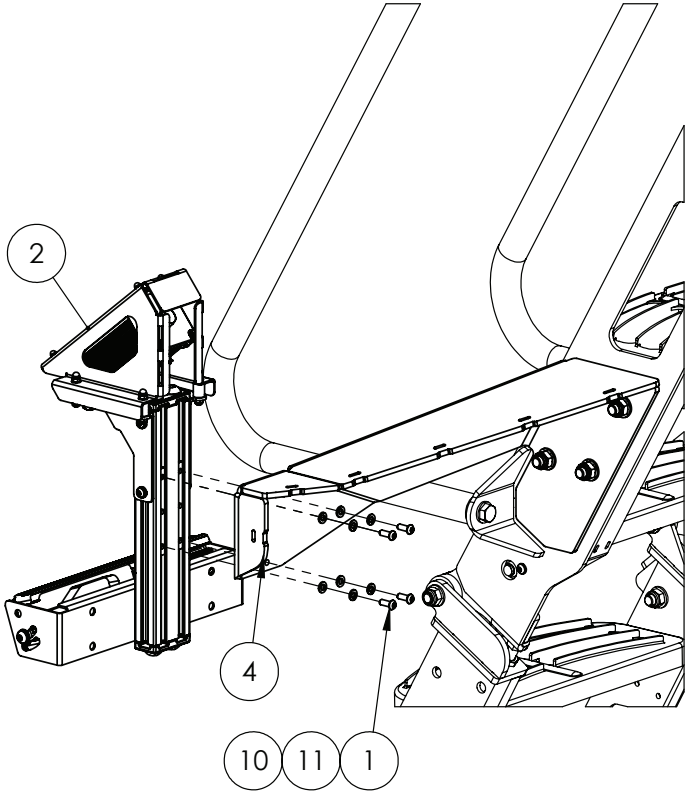

IF DESCRIPTION PREFIX IS ASSEMBLY DRAWING ONLY OR PRODUCTION DRAWING ONLY THE ITEM IS NOT FOR SALE			
ITEM	PART NUMBER	DESCRIPTION	QTY
1	GA5004050	BHCS M6 X 16 SS A2-70	9
2	GA4909661	MOUNT, FRONT, G8-S3, BILBERRY	2
3	GA5012461	NUT M12 NYLOC ZP	8
4	GA4000757	PLATE, MOUNT, FRONT, ARM, LEFT, BILBERRY	1
5	GA4000743	PLATE, MOUNT, FRONT, ARM, RIGHT, BILBERRY	1
6	GA4000755	PLATE, MOUNT, FRONT, LADDER BACKING, BILBERRY	2
7	GA4000756	PLATE, MOUNT, FRONT, LADDER POSITIONING, BILBERRY	2
8	GA5000319	SET SCREW M12 X 40 GR8.8 ZP	8
9	GA5000577	WASHER M12 FLAT SS HD	16
10	GA5004437	WASHER M6 FLAT SS HD	9
11	GA5004447	WASHER M6 SPRING SS	9
GA7800449 GOLDACRES		ASSEMBLY DRAWING ONLY, MOUNT, FRONT, G8-S3, BILBERRY	REV 00.A

Front Camera Mounting Arm, Bilberry, RH

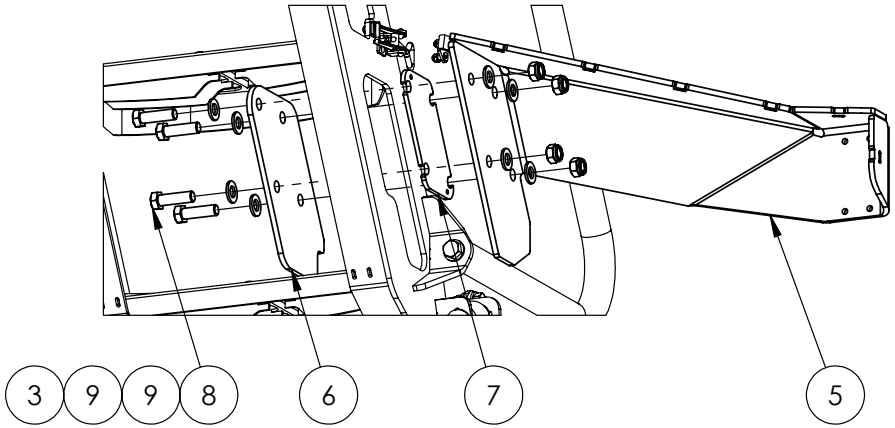

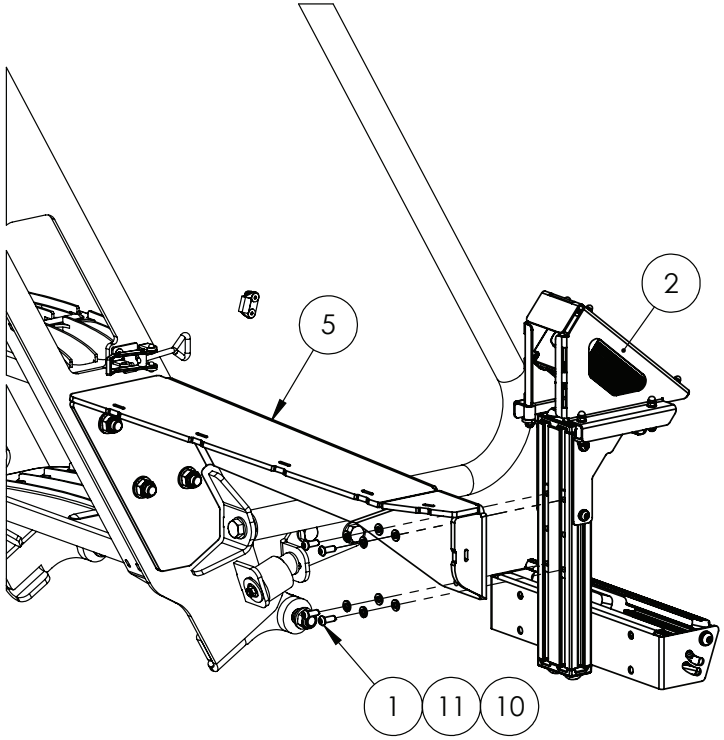

IF DESCRIPTION PREFIX IS ASSEMBLY DRAWING ONLY OR PRODUCTION DRAWING ONLY THE ITEM IS NOT FOR SALE			
ITEM	PART NUMBER	DESCRIPTION	QTY
1	GA5004050	BHCS M6 X 16 SS A2-70	9
2	GA4909661	MOUNT, FRONT, G8-S3, BILBERRY	2
3	GA5012461	NUT M12 NYLOC ZP	8
4	GA4000757	PLATE, MOUNT, FRONT, ARM, LEFT, BILBERRY	1
5	GA4000743	PLATE, MOUNT, FRONT, ARM, RIGHT, BILBERRY	1
6	GA4000755	PLATE, MOUNT, FRONT, LADDER BACKING, BILBERRY	2
7	GA4000756	PLATE, MOUNT, FRONT, LADDER POSITIONING, BILBERRY	2
8	GA5000319	SET SCREW M12 X 40 GR8.8 ZP	8
9	GA5000577	WASHER M12 FLAT SS HD	16
10	GA5004437	WASHER M6 FLAT SS HD	9
11	GA5004447	WASHER M6 SPRING SS	9
GA7800449 GOLDACRES		ASSEMBLY DRAWING ONLY, MOUNT, FRONT, G8-S3, BILBERRY	REV 00.A

Post Mount Assembly, Front Camera, 36mt-48mt, Bilberry

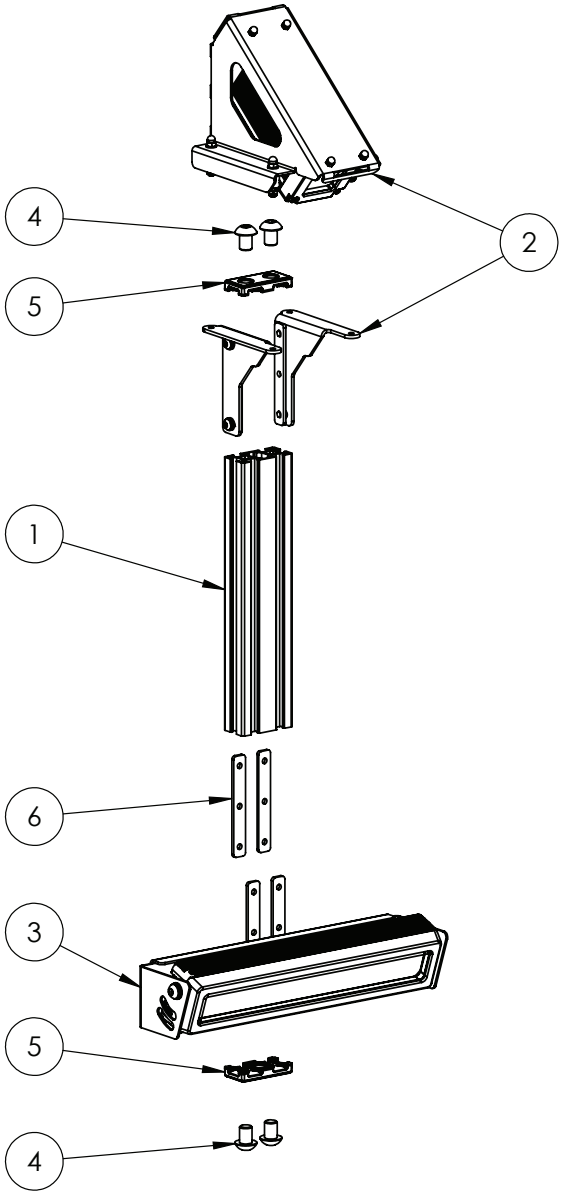

IF DESCRIPTION PREFIX IS ASSEMBLY DRAWING ONLY OR PRODUCTION DRAWING ONLY THE ITEM IS NOT FOR SALE			
ITEM	PART NUMBER	DESCRIPTION	QTY
1	GA4800165	ALUMINIUM, CUT, EXTRUSION, T SLOT, 30X60, BILBERRY, FRONT MOUNT, S3	1
2	GA7800448	ASSEMBLY DRAWING ONLY, MOUNT, CAMERA, VIBRATION ISOLATED, BILBERRY	1
3	GA7800447	ASSEMBLY DRAWING ONLY, MOUNT, LIGHT, GEN 3, BILBERRY	1
4	GA5069890	BHCS M12 X 16 GR12.9 ZP	4
5	GA4000795	END CAP, TO SUIT T SLOT EXTRUSION GA5073810	2
6	GA4525112	T SLOT THREADED INSERT, 3 HOLE, M6, STRAIGHT	2
GA4909661 GOLDACRES		MOUNT, FRONT, G8-S3, BILBERRY	REV 00.B

Front Camera Assembly, Vibration Insulated, Bilberry

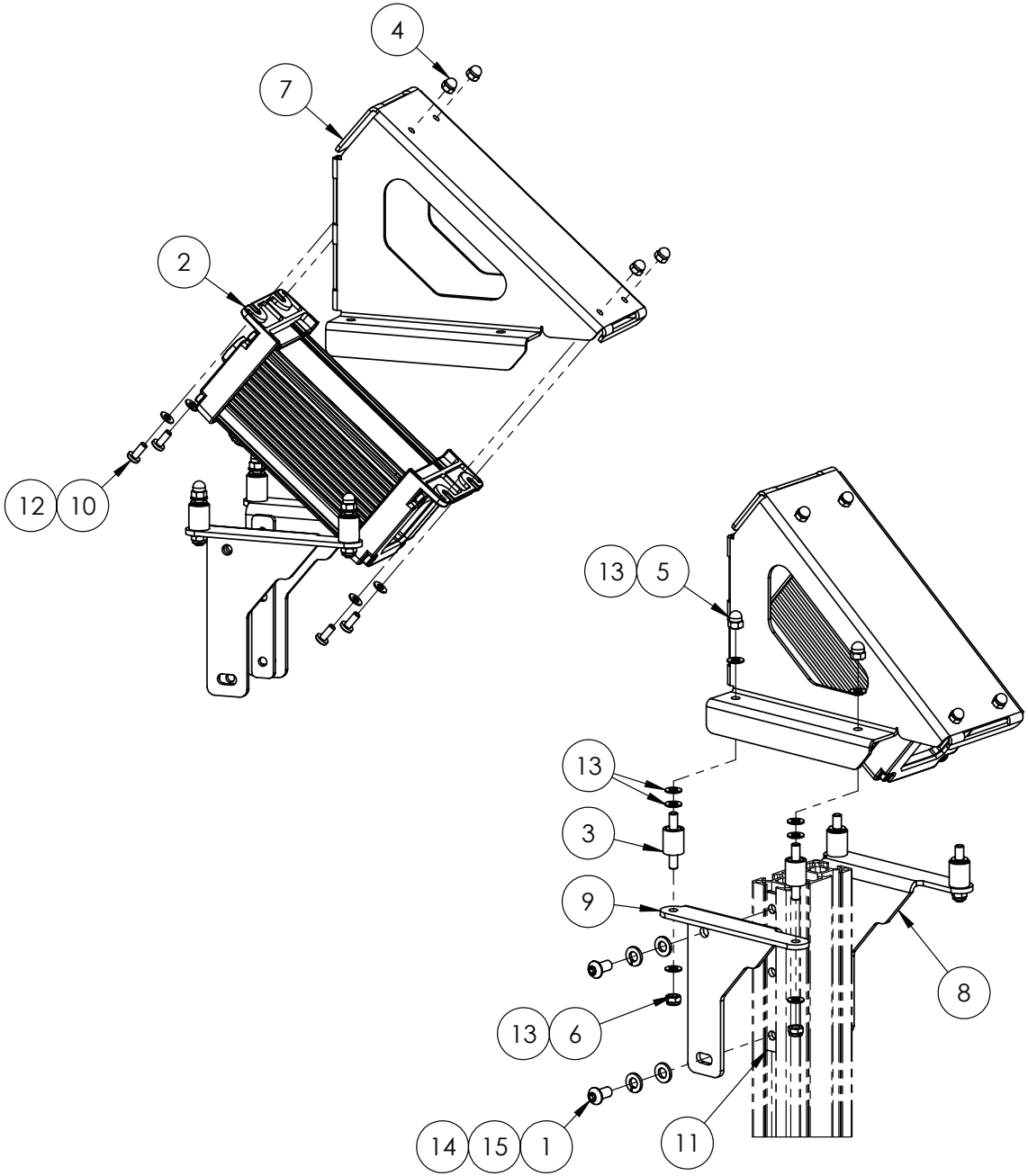

IF DESCRIPTION PREFIX IS ASSEMBLY DRAWING ONLY OR PRODUCTION DRAWING ONLY THE ITEM IS NOT FOR SALE			
ITEM	PART NUMBER	DESCRIPTION	QTY
1	GA5004033	BHCS M6 X 12 SS A2-70	4
2	GA3001041	CAMERA, BILBERRY, GEN 3, NUMBER 1, BILBERRY, CAM-AG-HK-GEN3	1
3	GA5026373	ISOLATOR, BOBBIN, RUBBER, M5 MALE STUDS, 10DAN, 120002	4
4	GA0500114	NUT M4 DOME SS	4
5	GA0500126	NUT M5 DOME SS	4
6	GA5003975	NUT M5 NYLOC SS	4
7	GA4000745	PLATE, MOUNT, CAMERA, VIBRATION ISOLATED, CAMERA BRACKET, BILBERRY	1
8	GA4000751	PLATE, MOUNT, CAMERA, VIBRATION ISOLATED, T SLOT BRACKET, LEFT, BILBERRY	1
9	GA4000746	PLATE, MOUNT, CAMERA, VIBRATION ISOLATED, T SLOT BRACKET, RIGHT, BILBERRY	1
10	GA5011360	SCREW PAN HEAD M4 X 10 SS A2-70	4
11	GA4525112	T SLOT THREADED INSERT, 3 HOLE, M6, STRAIGHT	2
12	GA5020510	WASHER M4 FLAT SS	4
13	GA5003983	WASHER M5 FLAT SS	16
14	GA5004437	WASHER M6 FLAT SS HD	4
15	GA5004447	WASHER M6 SPRING SS	4
GA7800448 GOLDACRES		ASSEMBLY DRAWING ONLY, MOUNT, CAMERA, VIBRATION INSULATED, BILBERRY	REV 01.A

Bilberry, Camera Positioning, LH, 36mt

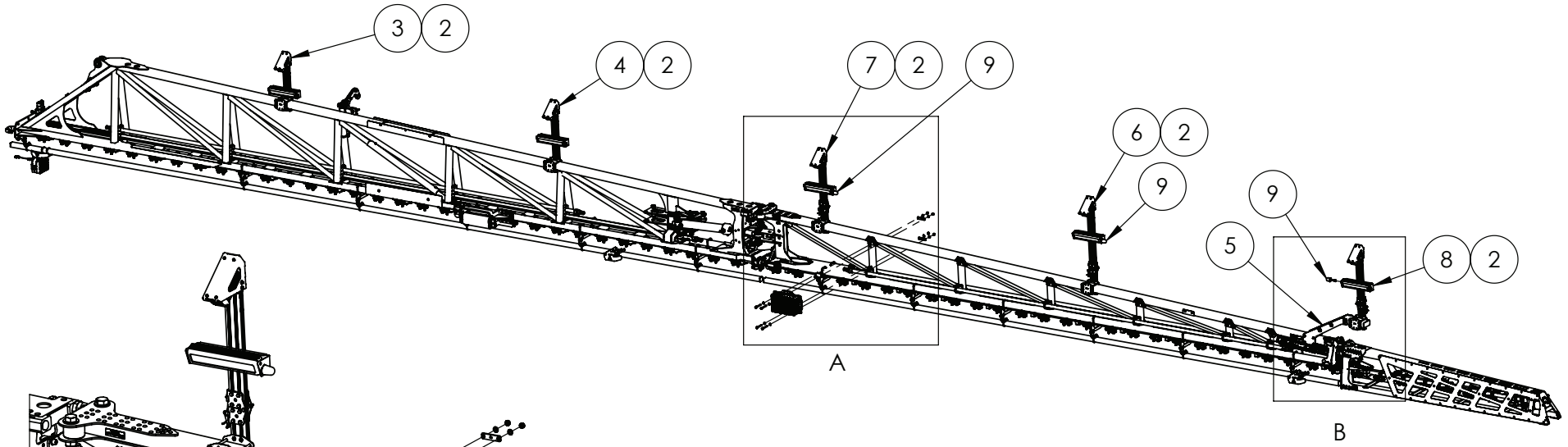

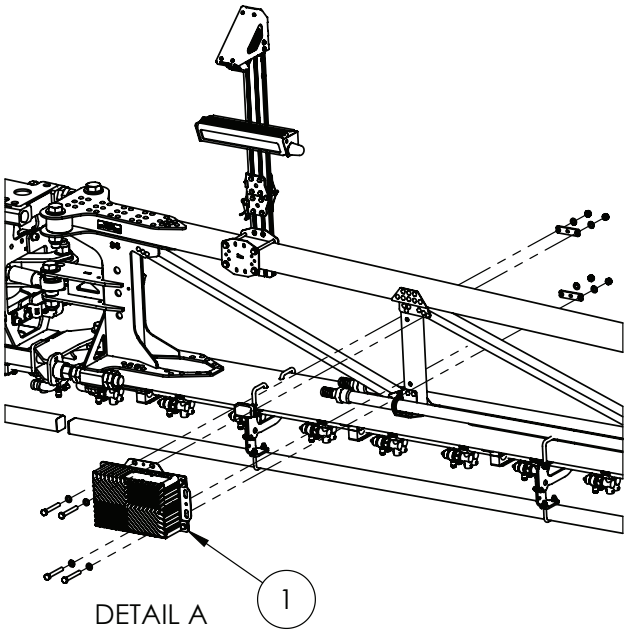

DETAIL A

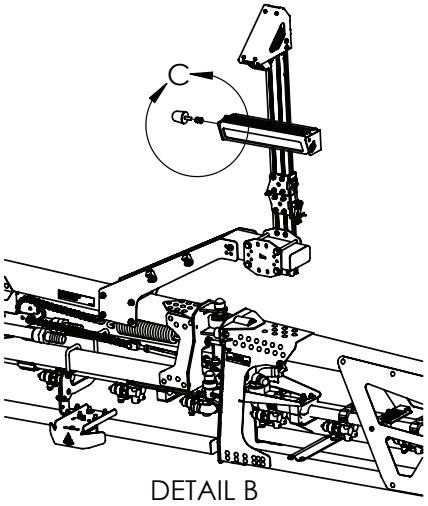

DETAIL B

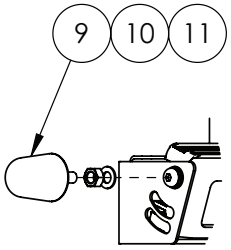

DETAIL C

IF DESCRIPTION PREFIX IS ASSEMBLY DRAWING ONLY OR PRODUCTION DRAWING ONLY THE ITEM IS NOT FOR SALE			
ITEM	PART NUMBER	DESCRIPTION	QTY
1	GA4912820	ASSEMBLY DRAWING ONLY, BILBERRY CALC MODULE MOUNT GEN 3	1
2	GA4909576	ASSEMBLY DRAWING ONLY, BILBERRY CAM POST BOOM MOUNT, LH RIVX, REAR	5
3	GA6101955	ASSEMBLY DRAWING ONLY, BILBERRY CAMERA POST CAM03/CAM04	1
4	GA6101956	ASSEMBLY DRAWING ONLY, BILBERRY CAMERA POST CAM05/CAM06	1
5	GA4909563	ASSEMBLY DRAWING ONLY, BILBERRY OUTER CAMERA MOUNT ARM SUIT 100mm SHS	1
6	GA6101958	ASSEMBLY DRAWING ONLY, BILBERRY CAMERA POST FOLDING CAM09 LH ASSEMBLY FITTED	1
7	GA6101957	ASSEMBLY DRAWING ONLY, BILBERRY CAMERA POST FOLDING LH CAM07 ASSEMBLY FITTED	1
8	GA6101959	ASSEMBLY DRAWING ONLY, BILBERRY CAMERA POST FOLDING LH CAM11 ASSEMBLY FITTED	1
9	GA5075600	BUFFER, ISOLATOR, SUIT CLAAS CABIN DOOR AND OIL TANK FRAME, 076 722.1	3
10	GA5011499	NUT M8 HEX ZP	3
11	GA5003651	WASHER M8 FLAT SS	3
GA6101972-09 GOLDACRES		PRODUCTION DRAWING ONLY, BOOM FINAL ASSEMBLY, 36M LH, RIVX	REV 00

Bilberry, Camera Positioning, RH, 36mt

HEIGHT OF CAMERA TO NOZZLE = 1200mm
HEIGHT OF NOZZLE TO GROUND LEVEL = 700mm
TOTAL HEIGHT OF ALL CAMERAS TO GROUND LEVEL = 1900mm

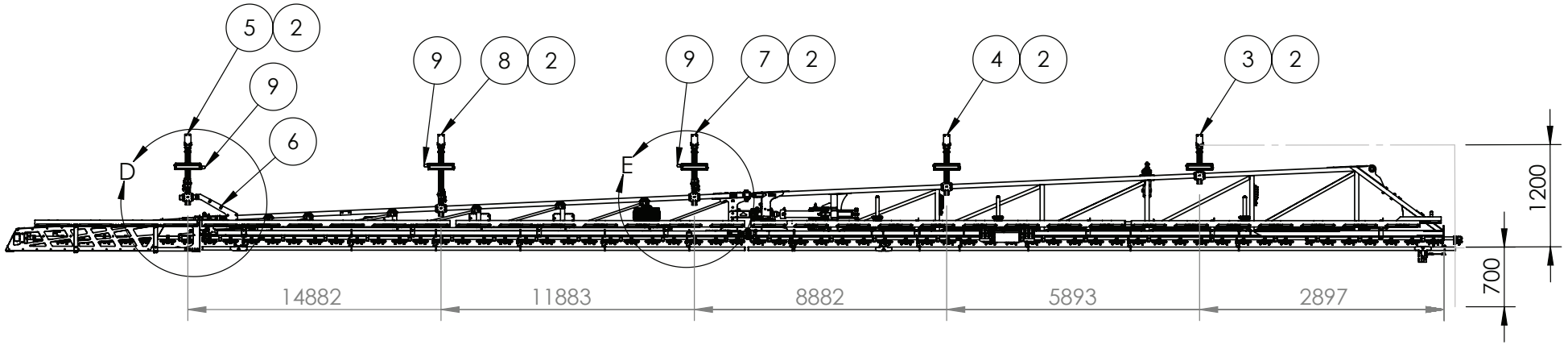

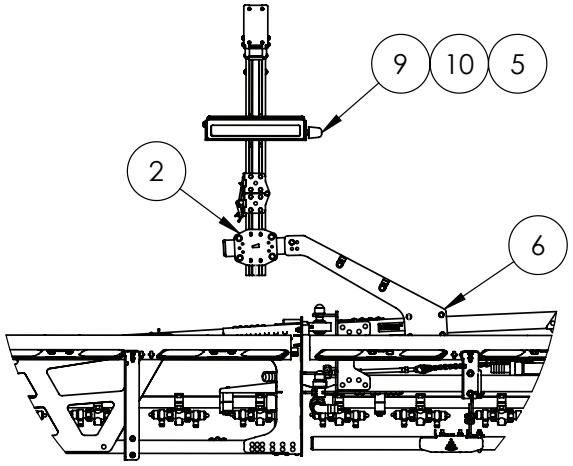

DETAIL D

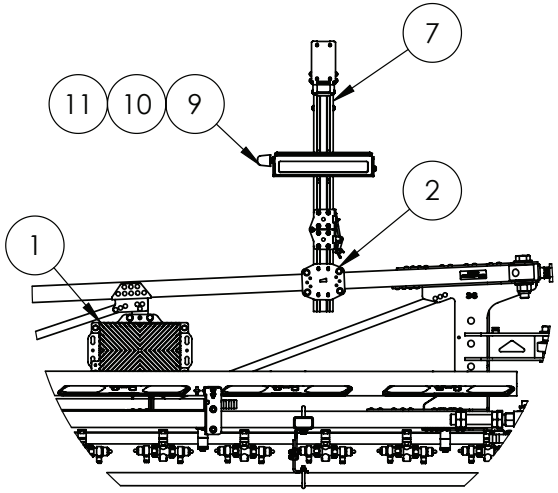

DETAIL E

IF DESCRIPTION PREFIX IS ASSEMBLY DRAWING ONLY OR PRODUCTION DRAWING ONLY THE ITEM IS NOT FOR SALE			
ITEM	PART NUMBER	DESCRIPTION	QTY
1	GA4912820	ASSEMBLY DRAWING ONLY, BILBERRY CALC MODULE MOUNT GEN 3	1
2	GA4909577	ASSEMBLY DRAWING ONLY, BILBERRY CAM POST BOOM MOUNT, RH RIVX, REAR	5
3	GA6101955	ASSEMBLY DRAWING ONLY, BILBERRY CAMERA POST CAM03/CAM04	1
4	GA6101956	ASSEMBLY DRAWING ONLY, BILBERRY CAMERA POST CAM05/CAM06	1
5	GA6101960	ASSEMBLY DRAWING ONLY, BILBERRY FOLDING CAMERA POST, RH CAM12	1
6	GA4909563	ASSEMBLY DRAWING ONLY, BILBERRY OUTER CAMERA MOUNT ARM SUIT 100mm SHS	1
7	GA6101961	ASSEMBLY DRAWING ONLY, BILBERRY CAMERA POST FOLDING RH CAM08 ASSEMBLY FITTED	1
8	GA6101962	ASSEMBLY DRAWING ONLY, BILBERRY CAMERA POST FOLDING RH CAM10 ASSEMBLY FITTED	1
9	GA5075600	BUFFER, ISOLATOR, SUIT CLAAS CABIN DOOR AND OIL TANK FRAME, 076 722.1	3
10	GA5011499	NUT M8 HEX ZP	3
11	GA5003651	WASHER M8 FLAT SS	3
GA6101976-09 GOLDACRES		PRODUCTION DRAWING ONLY, BOOM FINAL ASSEMBLY, 36M RH, RIVX	REV 00

Bilberry Cameras, CALC Module Mounting, LH Boom Wing, 36mt

HEIGHT OF CAMERA TO NOZZLE = 1200mm
HEIGHT OF NOZZLE TO GROUND LEVEL = 700mm
TOTAL HEIGHT OF ALL CAMERAS TO GROUND LEVEL = 1900mm

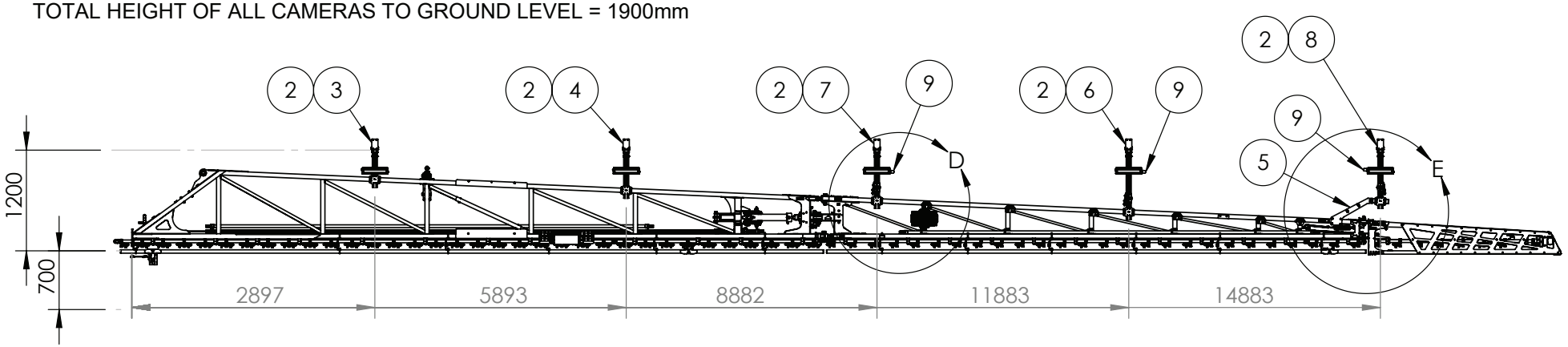

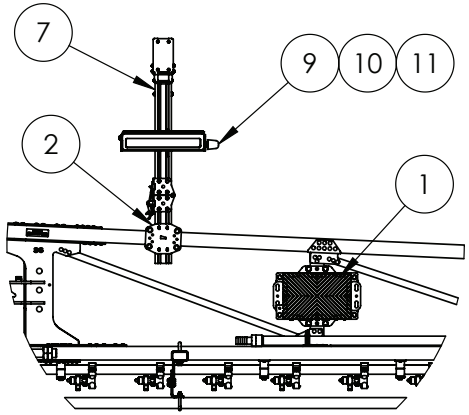

DETAIL D

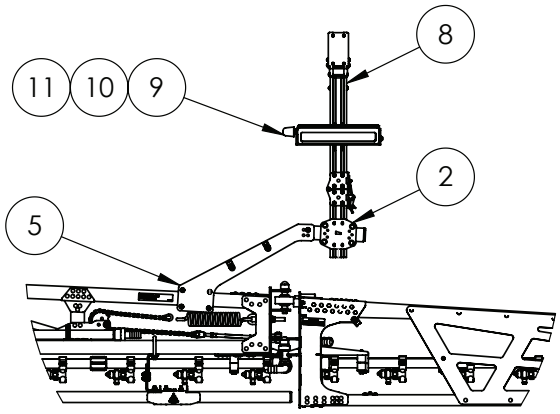

DETAIL E

IF DESCRIPTION PREFIX IS ASSEMBLY DRAWING ONLY OR PRODUCTION DRAWING ONLY THE ITEM IS NOT FOR SALE			
ITEM	PART NUMBER	DESCRIPTION	QTY
1	GA4912820	ASSEMBLY DRAWING ONLY, BILBERRY CALC MODULE MOUNT GEN 3	1
2	GA4909576	ASSEMBLY DRAWING ONLY, BILBERRY CAM POST BOOM MOUNT, LH RIVX, REAR	5
3	GA6101955	ASSEMBLY DRAWING ONLY, BILBERRY CAMERA POST CAM03/CAM04	1
4	GA6101956	ASSEMBLY DRAWING ONLY, BILBERRY CAMERA POST CAM05/CAM06	1
5	GA4909563	ASSEMBLY DRAWING ONLY, BILBERRY OUTER CAMERA MOUNT ARM SUIT 100mm SHS	1
6	GA6101958	ASSEMBLY DRAWING ONLY, BILBERRY CAMERA POST FOLDING CAM09 LH ASSEMBLY FITTED	1
7	GA6101957	ASSEMBLY DRAWING ONLY, BILBERRY CAMERA POST FOLDING LH CAM07 ASSEMBLY FITTED	1
8	GA6101959	ASSEMBLY DRAWING ONLY, BILBERRY CAMERA POST FOLDING LH CAM11 ASSEMBLY FITTED	1
9	GA5075600	BUFFER, ISOLATOR, SUIT CLAAS CABIN DOOR AND OIL TANK FRAME, 076 722.1	3
10	GA5011499	NUT M8 HEX ZP	3
11	GA5003651	WASHER M8 FLAT SS	3
GA6101972-09 GOLDACRES		PRODUCTION DRAWING ONLY, BOOM FINAL ASSEMBLY, 36M LH, RIVX	REV 00

Bilberry Cameras, CALC Module Mounting, RH Boom Wing, 36mt

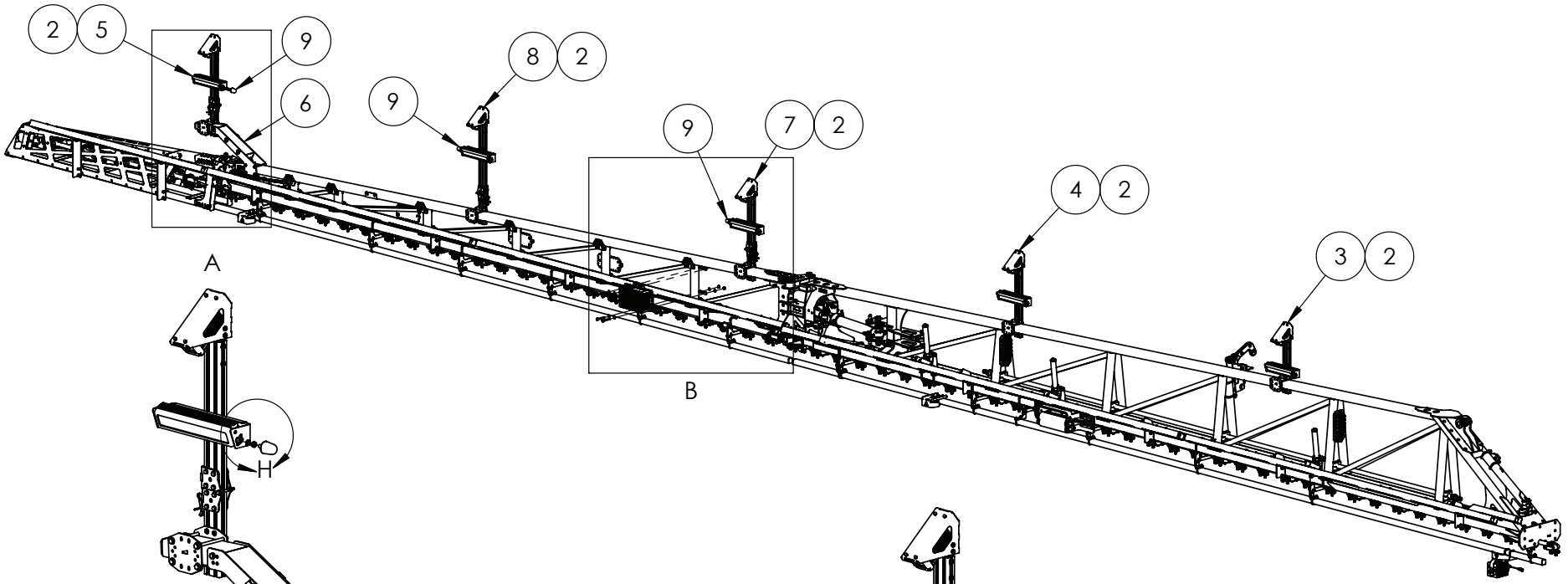

DETAIL A

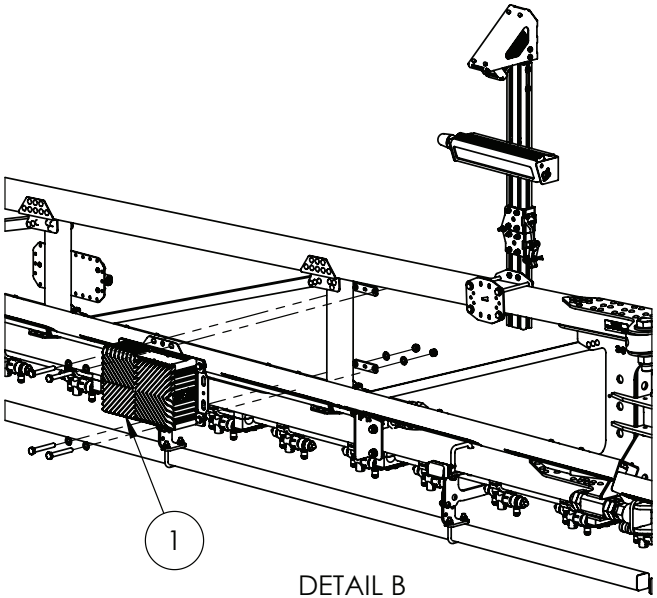

DETAIL B

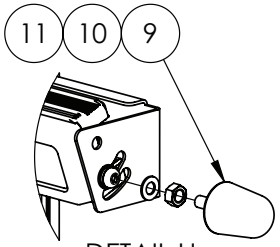

DETAIL H

IF DESCRIPTION PREFIX IS ASSEMBLY DRAWING ONLY OR PRODUCTION DRAWING ONLY THE ITEM IS NOT FOR SALE			
ITEM	PART NUMBER	DESCRIPTION	QTY
1	GA4912820	ASSEMBLY DRAWING ONLY, BILBERRY CALC MODULE MOUNT GEN 3	1
2	GA4909577	ASSEMBLY DRAWING ONLY, BILBERRY CAM POST BOOM MOUNT, RH RIVX, REAR	5
3	GA6101955	ASSEMBLY DRAWING ONLY, BILBERRY CAMERA POST CAM03/CAM04	1
4	GA6101956	ASSEMBLY DRAWING ONLY, BILBERRY CAMERA POST CAM05/CAM06	1
5	GA6101960	ASSEMBLY DRAWING ONLY, BILBERRY FOLDING CAMERA POST, RH CAM12	1
6	GA4909563	ASSEMBLY DRAWING ONLY, BILBERRY OUTER CAMERA MOUNT ARM SUIT 100mm SHS	1
7	GA6101961	ASSEMBLY DRAWING ONLY, BILBERRY CAMERA POST FOLDING RH CAM08 ASSEMBLY FITTED	1
8	GA6101962	ASSEMBLY DRAWING ONLY, BILBERRY CAMERA POST FOLDING RH CAM10 ASSEMBLY FITTED	1
9	GA5075600	BUFFER, ISOLATOR, SUIT CLAAS CABIN DOOR AND OIL TANK FRAME, 076 722.1	3
10	GA5011499	NUT M8 HEX ZP	3
11	GA5003651	WASHER M8 FLAT SS	3
GA6101976-09 GOLDACRES		PRODUCTION DRAWING ONLY, BOOM FINAL ASSEMBLY, 36M RH, RIVX	REV 00

Bilberry Cameras, CALC Module Mounting, RH Boom Wing, 42mt

Bilberry, Camera Positioning, LH, 42mt

Camera Post Assembly, Bilberry, (Camera 3 & 4, 36mt-42mt)

BUILD OPTION:
65276 - SPECIALISED LIGHTS FOR NIGHT TIME SPOT SPRAYING

NOTE:
SERIES 3 MACHINES - LIGHTS ARE STANDARD

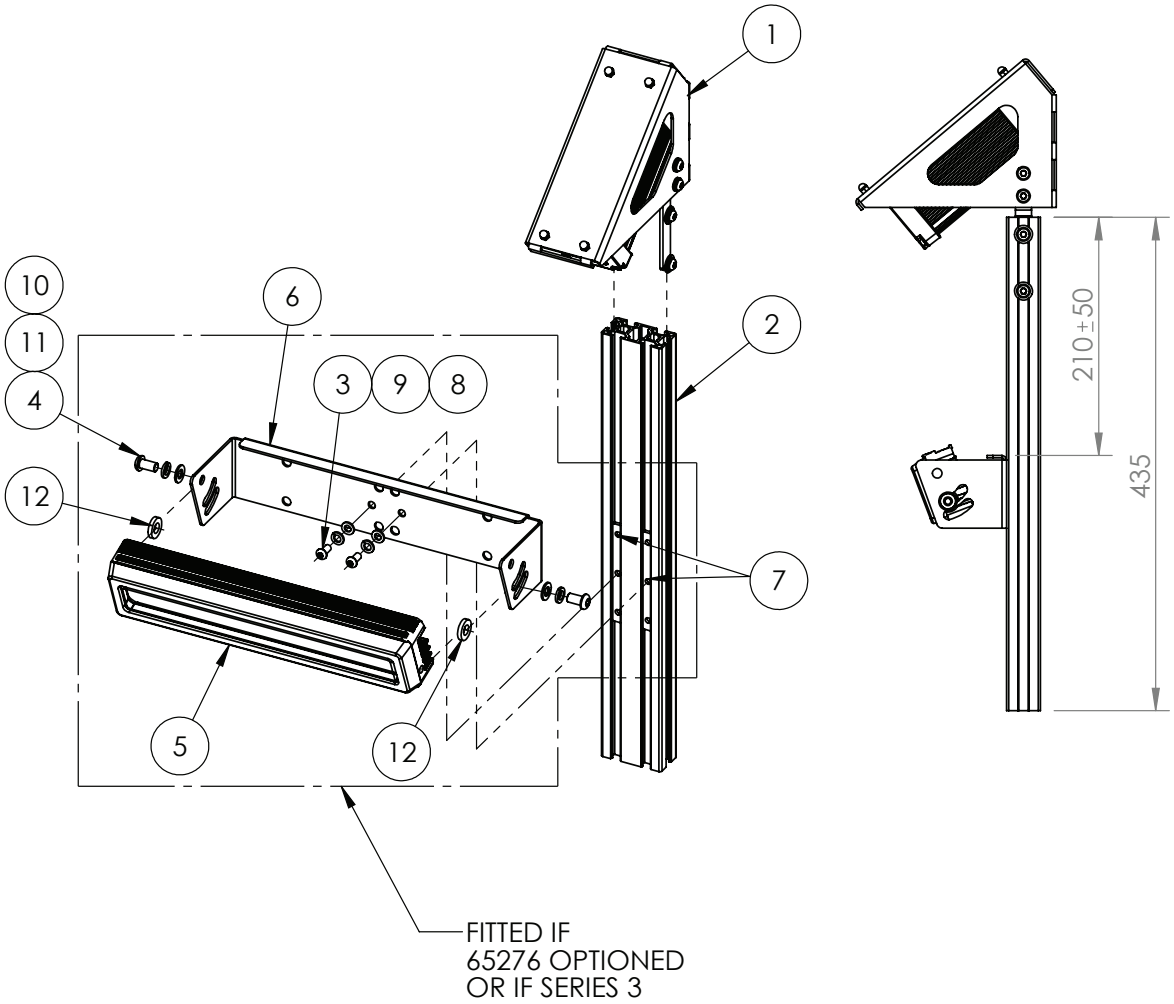

IF DESCRIPTION PREFIX IS ASSEMBLY DRAWING ONLY OR PRODUCTION DRAWING ONLY THE ITEM IS NOT FOR SALE			
ITEM	PART NUMBER	DESCRIPTION	QTY
1	GA4912710	ASSEMBLY DRAWING ONLY, BILBERRY CAMERA MOUNT ASSEMBLY	1
2	GA5073810	ALUMINIUM T SLOT EXTRUSION, 30 X 60 X 2mm, RADIUS EDGE, 6063 T5, SS3-84937	1
3	GA5004033	BHCS M6 X 12 SS A2-70	2
4	GA5004696	BHCS M8 X 16 SS A2-70	2
5	GA3000716	LED LIGHT MODULE, 3M SECTION, WEED DETECTION, GEN 3, BILBERRY	1
6	GA4526600	MOUNTING BRACKET SUIT BILBERRY SPOTLIGHT FRONT MOUNT	1
7	GA4525112	T SLOT THREADED INSERT, 3 HOLE, M6, STRAIGHT	2
8	GA5004437	WASHER 6mm FLAT SS	2
9	GA5004447	WASHER 6mm SPRING SS	2
10	GA5003643	WASHER 8mm FLAT SS HD	2
11	GA5004919	WASHER 8mm SPRING SS	2
12	GA5055245	WASHER, NOZZLE CAP SEAL, RUBBER, 19 OD X 9 ID, SUIT TEE JET NOZZLE, REPLACES CP19438-EPR	2
GA6101955 GOLDACRES		ASSEMBLY DRAWING ONLY, BILBERRY CAMERA POST CAM03/CAM04	REV 02

Camera Post Assembly, Bilberry, (Camera 5 & 6, 36mt-42mt)

BUILD OPTION:
65276 - SPECIALISED LIGHTS FOR NIGHT TIME SPOT SPRAYING

NOTE:
SERIES 3 MACHINES - LIGHTS ARE STANDARD

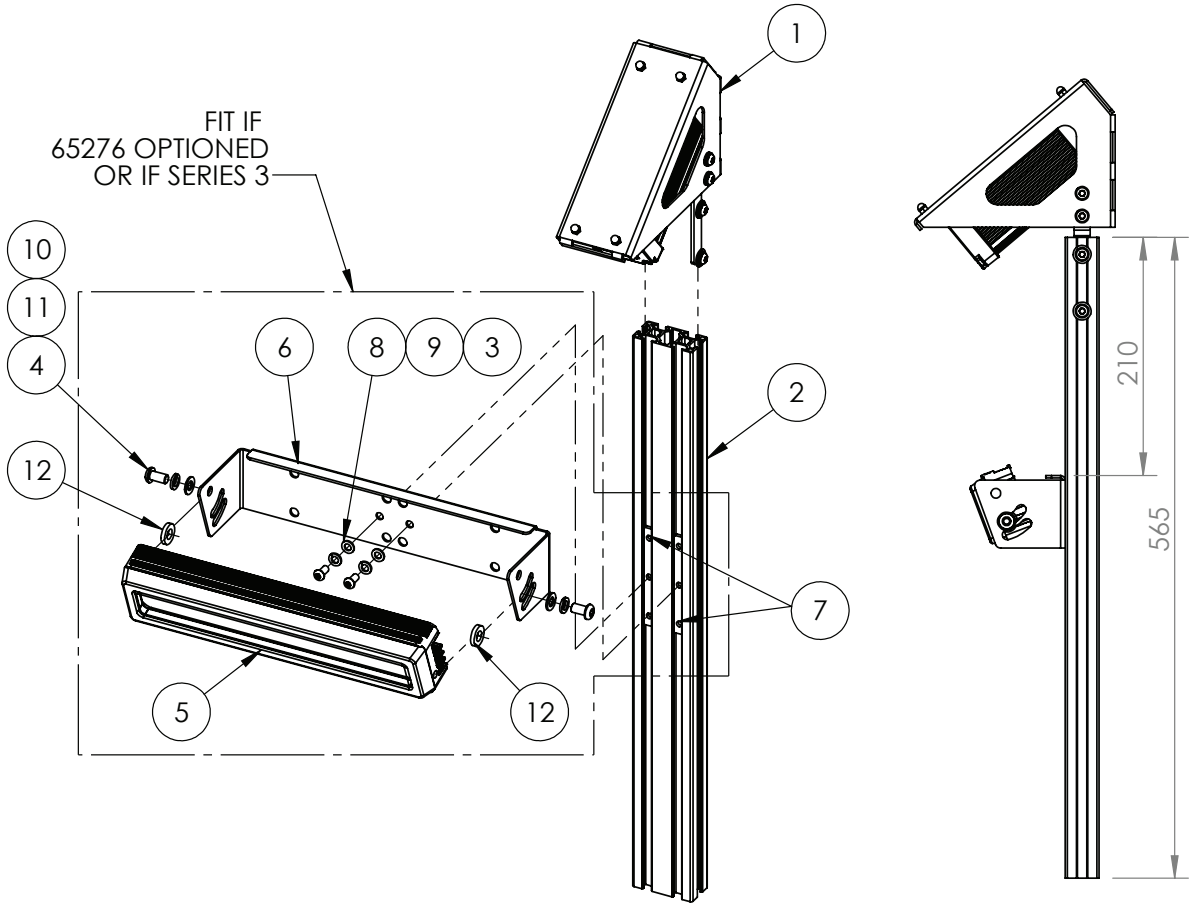

IF DESCRIPTION PREFIX IS ASSEMBLY DRAWING ONLY OR PRODUCTION DRAWING ONLY THE ITEM IS NOT FOR SALE			
ITEM	PART NUMBER	DESCRIPTION	QTY
1	GA4912710	ASSEMBLY DRAWING ONLY, BILBERRY CAMERA MOUNT ASSEMBLY	1
2	GA4703101	ALUMINIUM T SLOT EXTRUSION, 30 X 60 X 2mm, RADIUS EDGE, 6063 T5, SS3-84937	1
3	GA5004033	BHCS M6 X 12 SS A2-70	2
4	GA5004696	BHCS M8 X 16 SS A2-70	2
5	GA3000716	LED LIGHT MODULE, 3M SECTION, WEED DETECTION, GEN 3, BILBERRY	1
6	GA4526600	MOUNTING BRACKET SUIT BILBERRY SPOTLIGHT FRONT MOUNT	1
7	GA4525112	T SLOT THREADED INSERT, 3 HOLE, M6, STRAIGHT	2
8	GA5004437	WASHER 6mm FLAT SS	2
9	GA5004447	WASHER 6mm SPRING SS	2
10	GA5003643	WASHER 8mm FLAT SS HD	2
11	GA5004919	WASHER 8mm SPRING SS	2
12	GA5055245	WASHER, NOZZLE CAP SEAL, RUBBER, 19 OD X 9 ID, SUIT TEE JET NOZZLE, REPLACES CP19438-EPR	2
GA6101956 GOLDACRES		ASSEMBLY DRAWING ONLY, BILBERRY CAMERA POST CAM05/CAM06	REV 01

Camera Post Assembly, Bilberry, LH (Camera 7, 36mt)

BUILD OPTION:
65276 - SPECIALISED LIGHTS FOR NIGHT TIME SPOT SPRAYING

NOTE:
SERIES 3 MACHINES - LIGHTS ARE STANDARD

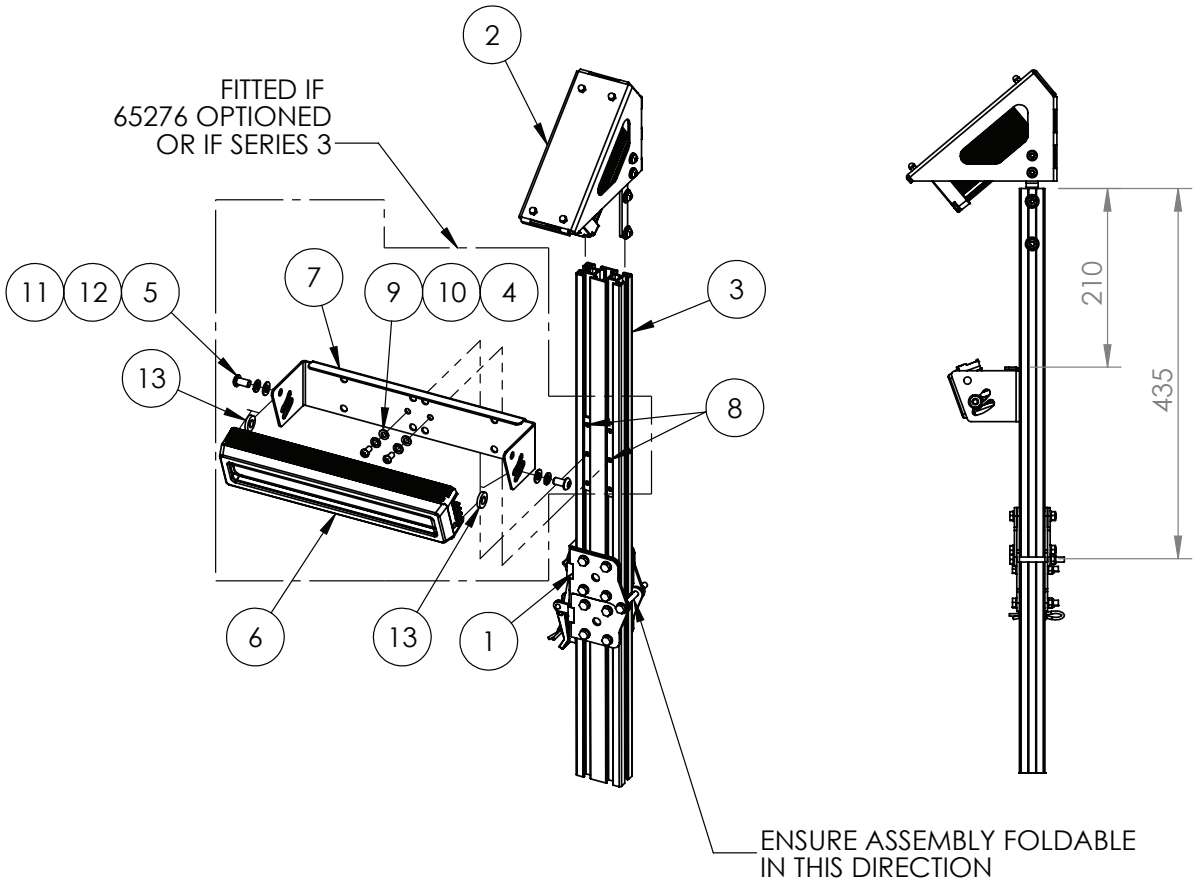

IF DESCRIPTION PREFIX IS ASSEMBLY DRAWING ONLY OR PRODUCTION DRAWING ONLY THE ITEM IS NOT FOR SALE			
ITEM	PART NUMBER	DESCRIPTION	QTY
1	GA4909588	ASSEMBLY DRAWING ONLY, BILBERRY CAM POST LOWER FOLDING ASSEMBLY, 250mm	1
2	GA4912710	ASSEMBLY DRAWING ONLY, BILBERRY CAMERA MOUNT ASSEMBLY	1
3	GA5073810	ALUMINIUM T SLOT EXTRUSION, 30 X 60 X 2mm, RADIUS EDGE, 6063 T5, SS3-84937	1
4	GA5004033	BHCS M6 X 12 SS A2-70	2
5	GA5004696	BHCS M8 X 16 SS A2-70	2
6	GA3000716	LED LIGHT MODULE, 3M SECTION, WEED DETECTION, GEN 3, BILBERRY	1
7	GA4526600	MOUNTING BRACKET SUIT BILBERRY SPOTLIGHT FRONT MOUNT	1
8	GA4525112	T SLOT THREADED INSERT, 3 HOLE, M6, STRAIGHT	2
9	GA5004437	WASHER 6mm FLAT SS	2
10	GA5004447	WASHER 6mm SPRING SS	2
11	GA5003651	WASHER 8mm FLAT SS	2
12	GA5004919	WASHER 8mm SPRING SS	2
13	GA5055245	WASHER, NOZZLE CAP SEAL, RUBBER, 19 OD X 9 ID, SUIT TEE JET NOZZLE, REPLACES CP19438-EPR	2
GA6101957 GOLDACRES		ASSEMBLY DRAWING ONLY, BILBERRY CAMERA POST FOLDING LH CAM07 ASSEMBLY FITTED	REV 02

Camera Post Assembly, Bilberry, RH (Camera 8, 36mt)

BUILD OPTION:
65276 - SPECIALISED LIGHTS FOR NIGHT TIME SPOT SPRAYING

NOTE:
SERIES 3 MACHINES - LIGHTS ARE STANDARD

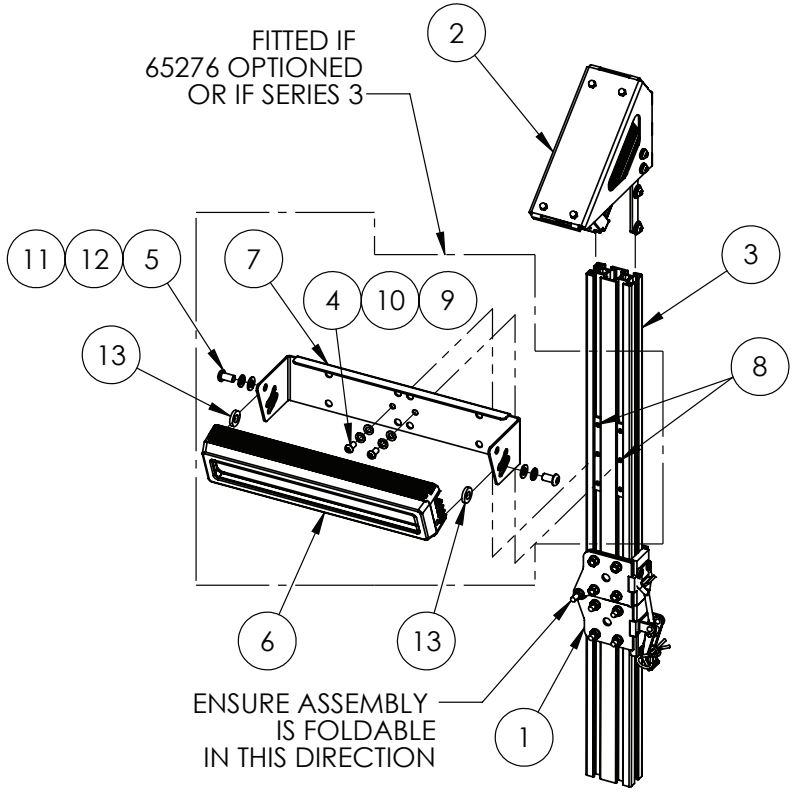

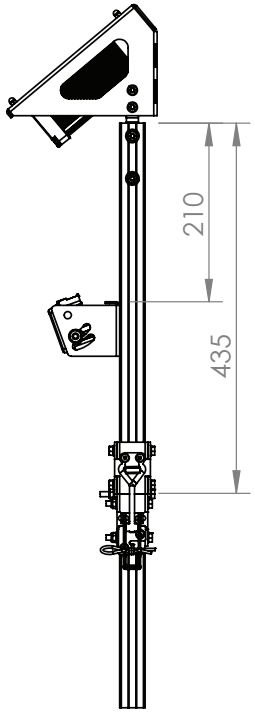

IF DESCRIPTION PREFIX IS ASSEMBLY DRAWING ONLY OR PRODUCTION DRAWING ONLY THE ITEM IS NOT FOR SALE			
ITEM	PART NUMBER	DESCRIPTION	QTY
1	GA4909588	ASSEMBLY DRAWING ONLY, BILBERRY CAM POST LOWER FOLDING ASSEMBLY, 250mm	1
2	GA4912710	ASSEMBLY DRAWING ONLY, BILBERRY CAMERA MOUNT ASSEMBLY	1
3	GA5073810	ALUMINIUM T SLOT EXTRUSION, 30 X 60 X 2mm, RADIUS EDGE, 6063 T5, SS3-84937	1
4	GA5004033	BHCS M6 X 12 SS A2-70	2
5	GA5004696	BHCS M8 X 16 SS A2-70	2
6	GA3000716	LED LIGHT MODULE, 3M SECTION, WEED DETECTION, GEN 3, BILBERRY	1
7	GA4526600	MOUNTING BRACKET SUIT BILBERRY SPOTLIGHT FRONT MOUNT	1
8	GA4525112	T SLOT THREADED INSERT, 3 HOLE, M6, STRAIGHT	2
9	GA5004437	WASHER 6mm FLAT SS	2
10	GA5004447	WASHER 6mm SPRING SS	2
11	GA5003643	WASHER 8mm FLAT SS HD	2
12	GA5004919	WASHER 8mm SPRING SS	2
13	GA5055245	WASHER, NOZZLE CAP SEAL, RUBBER, 19 OD X 9 ID, SUIT TEE JET NOZZLE, REPLACES CP19438-EPR	2
GA6101961 GOLDACRES		ASSEMBLY DRAWING ONLY, BILBERRY CAMERA POST FOLDING RH CAM08 ASSEMBLY FITTED	REV 01

Camera Post Assembly, Bilberry, (Camera 7 & 8, 42mt)

42m BOOM ONLY

BUILD OPTION:
65276 - SPECIALISED LIGHTS FOR NIGHT TIME SPOT SPRAYING

NOTE:
SERIES 3 MACHINES - LIGHTS ARE STANDARD

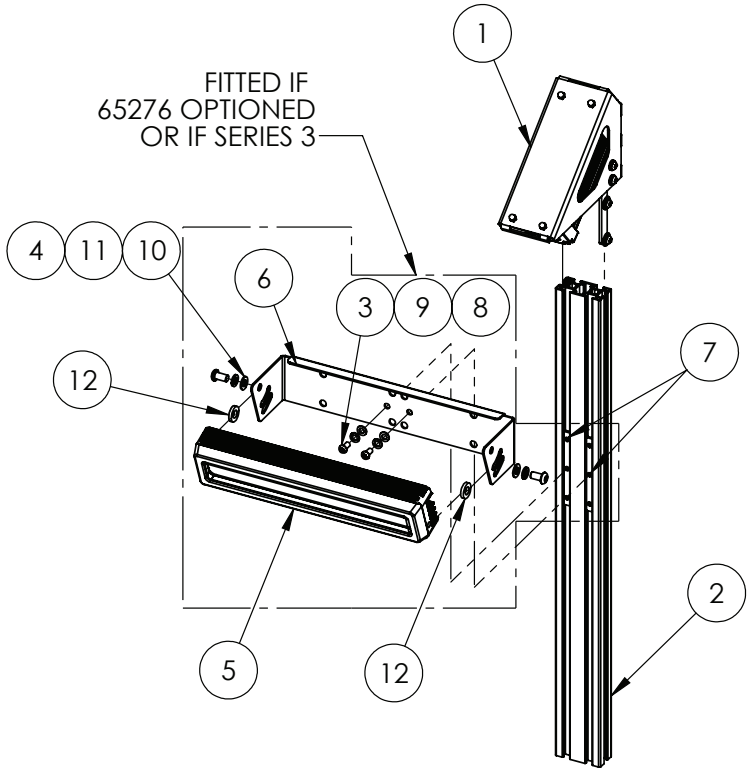

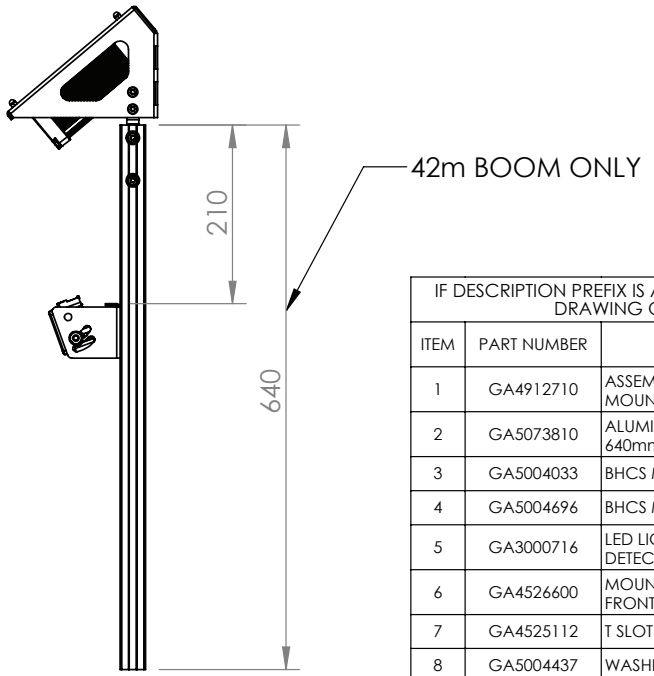

IF DESCRIPTION PREFIX IS ASSEMBLY DRAWING ONLY OR PRODUCTION DRAWING ONLY THE ITEM IS NOT FOR SALE			
ITEM	PART NUMBER	DESCRIPTION	QTY.
1	GA4912710	ASSEMBLY DRAWING ONLY, BILBERRY CAMERA MOUNT ASSEMBLY	1
2	GA5073810	ALUMINIUM T SLOT EXTRUSION, 30 X 60 X 2mm, 640mm LONG, SUIT CAMERA POST	1
3	GA5004033	BHCS M6 X 12 SS A2-70	2
4	GA5004696	BHCS M8 X 16 SS A2-70	2
5	GA3000716	LED LIGHT MODULE, 3M SECTION, WEED DETECTION, GEN 3, BILBERRY	1
6	GA4526600	MOUNTING BRACKET SUIT BILBERRY SPOTLIGHT FRONT MOUNT	1
7	GA4525112	T SLOT THREADED INSERT, 3 HOLE, M6, STRAIGHT	2
8	GA5004437	WASHER 6mm FLAT SS	2
9	GA5004447	WASHER 6mm SPRING SS	2
10	GA5003651	WASHER 8mm FLAT SS	2
11	GA5004919	WASHER 8mm SPRING SS	2
12	GA5055245	WASHER, NOZZLE CAP SEAL, RUBBER, 19 OD X 9 ID, SUIT TEE JET NOZZLE, REPLACES CP19438-EPR	2
GA6101957 GOLDACRES		ASSEMBLY DRAWING ONLY, BILBERRY CAMERA POST FOLDING LH CAM07 ASSEMBLY FITTED	REV 02

Camera Post Assembly, Bilberry, LH, (Camera 9, 36mt-42mt)

BUILD OPTION:
65276 - SPECIALISED LIGHTS FOR NIGHT TIME SPOT SPRAYING

NOTE:
SERIES 3 MACHINES - LIGHTS ARE STANDARD

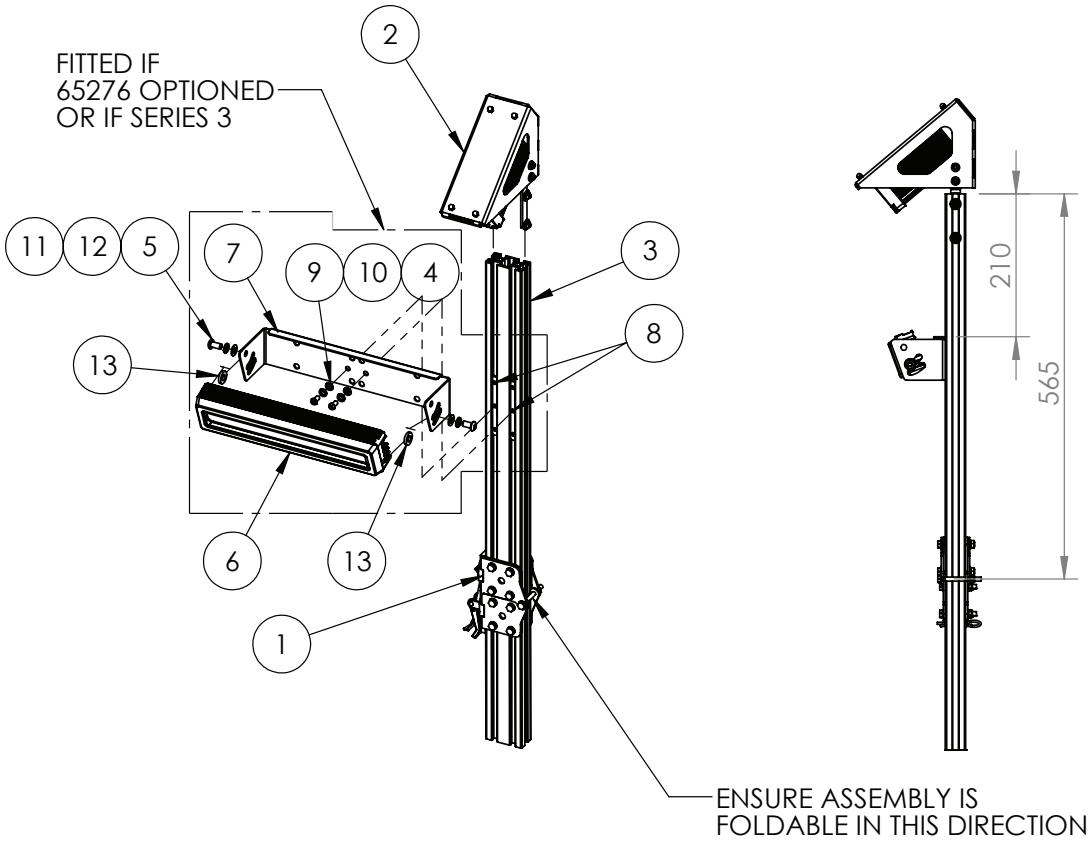

IF DESCRIPTION PREFIX IS ASSEMBLY DRAWING ONLY OR PRODUCTION DRAWING ONLY THE ITEM IS NOT FOR SALE			
ITEM	PART NUMBER	DESCRIPTION	QTY
1	GA4909588	ASSEMBLY DRAWING ONLY, BILBERRY CAM POST LOWER FOLDING ASSEMBLY, 250mm	1
2	GA4912710	ASSEMBLY DRAWING ONLY, BILBERRY CAMERA MOUNT ASSEMBLY	1
3	GA4703101	ALUMINIUM T SLOT EXTRUSION, 30 X 60 X 2mm, RADIUS EDGE, 6063 T5, SS3-84937	1
4	GA5004033	BHCS M6 X 12 SS A2-70	2
5	GA5004696	BHCS M8 X 16 SS A2-70	2
6	GA3000716	LED LIGHT MODULE, 3M SECTION, WEED DETECTION, GEN 3, BILBERRY	1
7	GA4526600	MOUNTING BRACKET SUIT BILBERRY SPOTLIGHT FRONT MOUNT	1
8	GA4525112	T SLOT THREADED INSERT, 3 HOLE, M6, STRAIGHT	2
9	GA5004437	WASHER 6mm FLAT SS	2
10	GA5004447	WASHER 6mm SPRING SS	2
11	GA5003651	WASHER 8mm FLAT SS	2
12	GA5004919	WASHER 8mm SPRING SS	2
13	GA5055245	WASHER, NOZZLE CAP SEAL, RUBBER, 19 OD X 9 ID, SUIT TEE JET NOZZLE, REPLACES CP19438-EPR	2
GA6101958 GOLDACRES		ASSEMBLY DRAWING ONLY, BILBERRY CAMERA POST FOLDING CAM09 LH ASSEMBLY FITTED	REV 01

Camera Post Assembly, Bilberry, RH, (Camera 10, 36mt-42mt)

BUILD OPTION:
65276 - SPECIALISED LIGHTS FOR NIGHT TIME SPOT SPRAYING

NOTE:
SERIES 3 MACHINES - LIGHTS ARE STANDARD

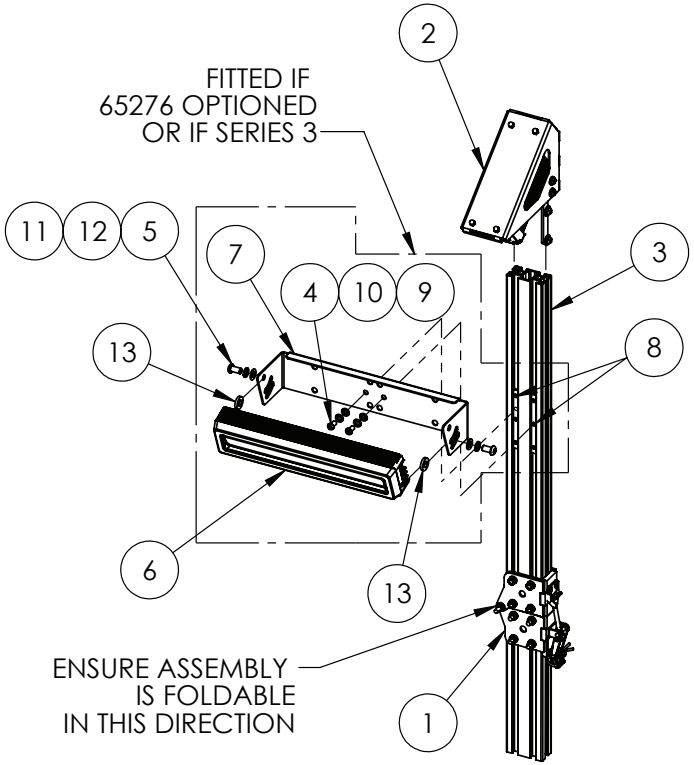

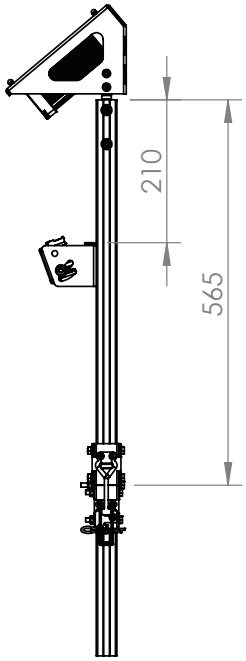

IF DESCRIPTION PREFIX IS ASSEMBLY DRAWING ONLY OR PRODUCTION DRAWING ONLY THE ITEM IS NOT FOR SALE			
ITEM	PART NUMBER	DESCRIPTION	QTY
1	GA4909588	ASSEMBLY DRAWING ONLY, BILBERRY CAM POST LOWER FOLDING ASSEMBLY, 250mm	1
2	GA4912710	ASSEMBLY DRAWING ONLY, BILBERRY CAMERA MOUNT ASSEMBLY	1
3	GA4703101	ALUMINIUM T SLOT EXTRUSION, 30 X 60 X 2mm, RADIUS EDGE, 6063 T5, SS3-84937	1
4	GA5004033	BHCS M6 X 12 SS A2-70	2
5	GA5004696	BHCS M8 X 16 SS A2-70	2
6	GA3000716	LED LIGHT MODULE, 3M SECTION, WEED DETECTION, GEN 3, BILBERRY	1
7	GA4526600	MOUNTING BRACKET SUIT BILBERRY SPOTLIGHT FRONT MOUNT	1
8	GA4525112	T SLOT THREADED INSERT, 3 HOLE, M6, STRAIGHT	2
9	GA5004437	WASHER 6mm FLAT SS	2
10	GA5004447	WASHER 6mm SPRING SS	2
11	GA5003643	WASHER 8mm FLAT SS HD	2
12	GA5004919	WASHER 8mm SPRING SS	2
13	GA5055245	WASHER, NOZZLE CAP SEAL, RUBBER, 19 OD X 9 ID, SUIT TEE JET NOZZLE, REPLACES CP19438-EPR	2
GA6101962 GOLDACRES		ASSEMBLY DRAWING ONLY, BILBERRY CAMERA POST FOLDING RH CAM10 ASSEMBLY FITTED	REV 01

Camera Post Assembly, Bilberry, LH, (Camera 11, 36mt-42mt)

BUILD OPTION:
65276 - SPECIALISED LIGHTS FOR NIGHT TIME SPOT SPRAYING

NOTE:
SERIES 3 MACHINES - LIGHTS ARE STANDARD

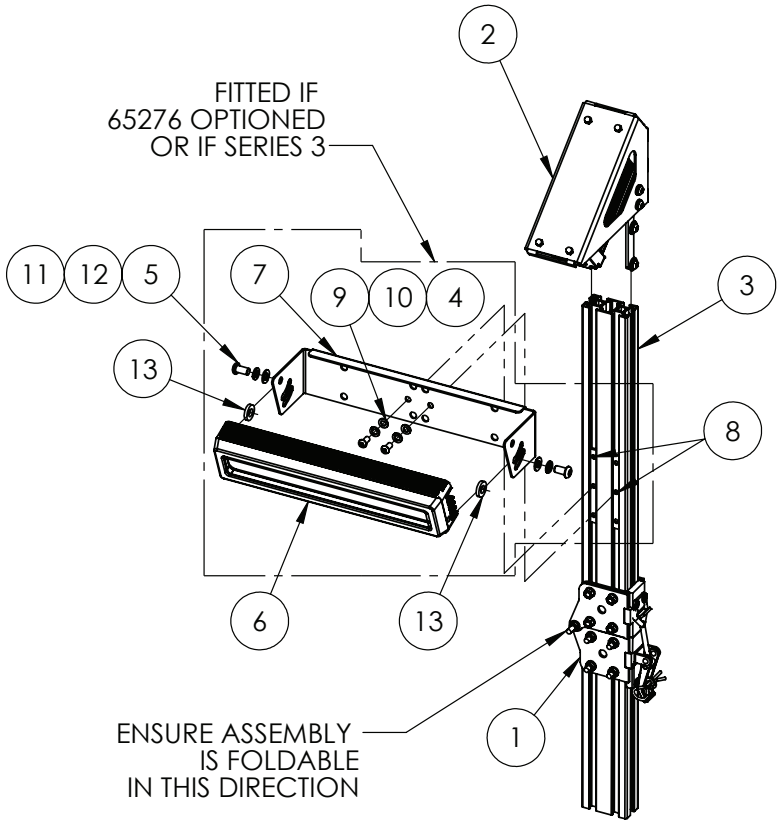

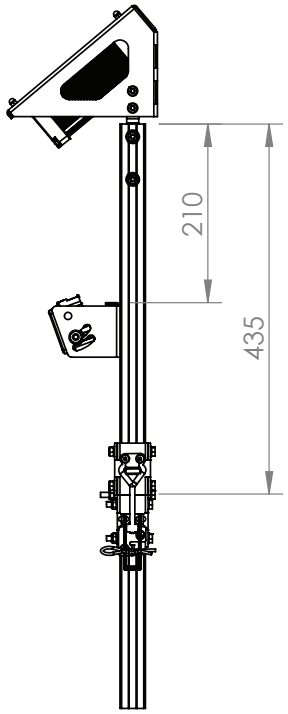

IF DESCRIPTION PREFIX IS ASSEMBLY DRAWING ONLY OR PRODUCTION DRAWING ONLY THE ITEM IS NOT FOR SALE			
ITEM	PART NUMBER	DESCRIPTION	QTY
1	GA4909588	ASSEMBLY DRAWING ONLY, BILBERRY CAM POST LOWER FOLDING ASSEMBLY, 250mm	1
2	GA4912710	ASSEMBLY DRAWING ONLY, BILBERRY CAMERA MOUNT ASSEMBLY	1
3	GA5073810	ALUMINIUM T SLOT EXTRUSION, 30 X 60 X 2mm, RADIUS EDGE, 6063 T5, SS3-84937	1
4	GA5004033	BHCS M6 X 12 SS A2-70	2
5	GA5004696	BHCS M8 X 16 SS A2-70	2
6	GA3000716	LED LIGHT MODULE, 3M SECTION, WEED DETECTION, GEN 3, BILBERRY	1
7	GA4526600	MOUNTING BRACKET SUIT BILBERRY SPOTLIGHT FRONT MOUNT	1
8	GA4525112	T SLOT THREADED INSERT, 3 HOLE, M6, STRAIGHT	2
9	GA5004437	WASHER 6mm FLAT SS	2
10	GA5004447	WASHER 6mm SPRING SS	2
11	GA5003651	WASHER 8mm FLAT SS	2
12	GA5004919	WASHER 8mm SPRING SS	2
13	GA5055245	WASHER, NOZZLE CAP SEAL, RUBBER, 19 OD X 9 ID, SUIT TEE JET NOZZLE, REPLACES CP19438-EPR	2
GA6101959 GOLDACRES		ASSEMBLY DRAWING ONLY, BILBERRY CAMERA POST FOLDING LH CAM11 ASSEMBLY FITTED	REV 01

Camera Post Assembly, Bilberry, RH, (Camera 12, 36mt-42mt)

BUILD OPTION:
65276 - SPECIALISED LIGHTS FOR NIGHT TIME SPOT SPRAYING

NOTE:
SERIES 3 MACHINES - LIGTHS ARE STANDARD

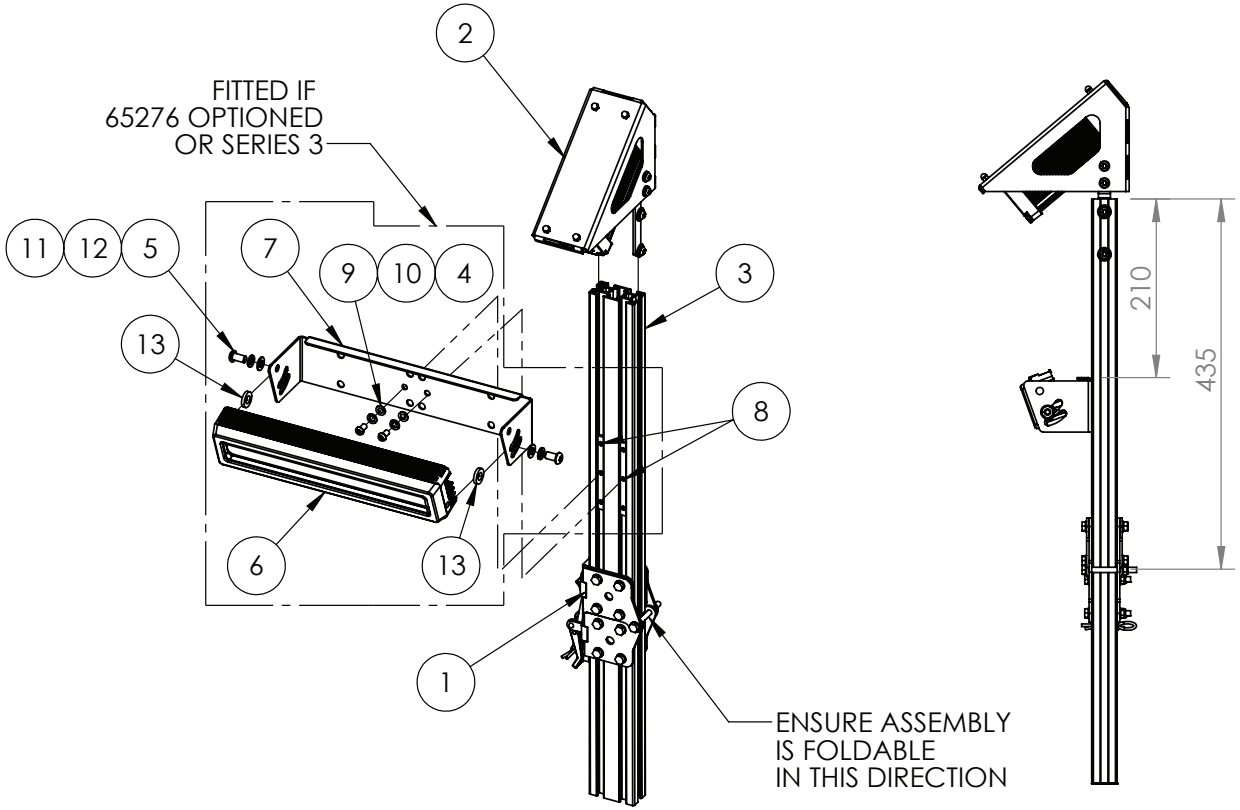

IF DESCRIPTION PREFIX IS ASSEMBLY DRAWING ONLY OR PRODUCTION DRAWING ONLY THE ITEM IS NOT FOR SALE			
ITEM	PART NUMBER	DESCRIPTION	QTY
1	GA4909588	ASSEMBLY DRAWING ONLY, BILBERRY CAM POST LOWER FOLDING ASSEMBLY, 250mm	1
2	GA4912710	ASSEMBLY DRAWING ONLY, BILBERRY CAMERA MOUNT ASSEMBLY	1
3	GA5073810	ALUMINIUM T SLOT EXTRUSION, 30 X 60 X 2mm, RADIUS EDGE, 6063 T5, SS3-84937	1
4	GA5004033	BHCS M6 X 12 SS A2-70	2
5	GA5004696	BHCS M8 X 16 SS A2-70	2
6	GA3000716	LED LIGHT MODULE, 3M SECTION, WEED DETECTION, GEN 3, BILBERRY	1
7	GA4526600	MOUNTING BRACKET SUIT BILBERRY SPOTLIGHT FRONT MOUNT	1
8	GA4525112	T SLOT THREADED INSERT, 3 HOLE, M6, STRAIGHT	2
9	GA5004437	WASHER 6mm FLAT SS	2
10	GA5004447	WASHER 6mm SPRING SS	2
11	GA5003643	WASHER 8mm FLAT SS HD	2
12	GA5004919	WASHER 8mm SPRING SS	2
13	GA5055245	WASHER, NOZZLE CAP SEAL, RUBBER, 19 OD X 9 ID, SUIT TEE JET NOZZLE, REPLACES CP19438-EPR	2
GA6101960 GOLDACRES		ASSEMBLY DRAWING ONLY, BILBERRY FOLDING CAMERA POST, RH CAM12	REV 01

Camera Post Assembly, Bilberry, LH, (Camera 13, 42mt)

BUILD OPTION:
65276 - SPECIALISED LIGHTS FOR NIGHT TIME SPOT SPRAYING

NOTE:
SERIES 3 MACHINES - LIGHTS ARE STANDARD

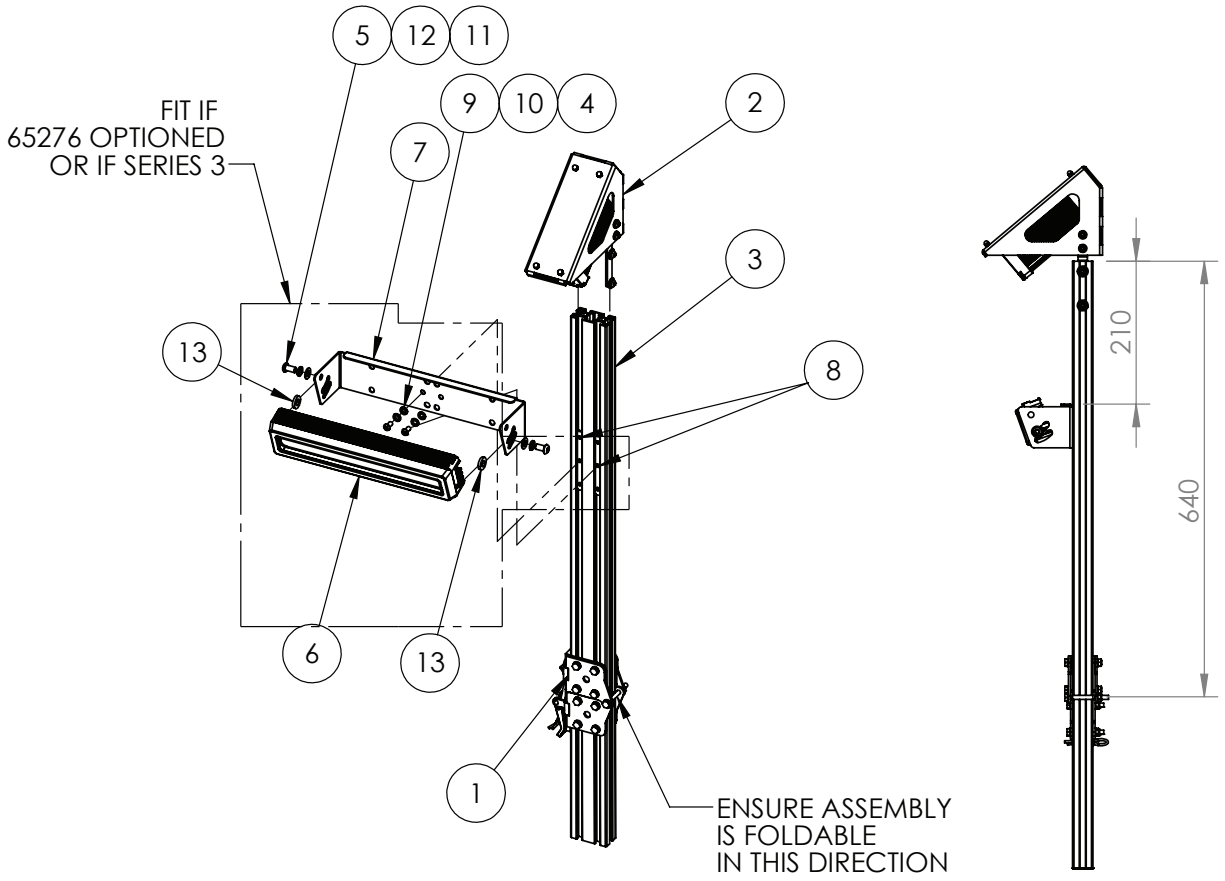

IF DESCRIPTION PREFIX IS ASSEMBLY DRAWING ONLY OR PRODUCTION DRAWING ONLY THE ITEM IS NOT FOR SALE			
ITEM	PART NUMBER	DESCRIPTION	QTY
1	GA4909588	ASSEMBLY DRAWING ONLY, BILBERRY CAM POST LOWER FOLDING ASSEMBLY, 250mm	1
2	GA4912710	ASSEMBLY DRAWING ONLY, BILBERRY CAMERA MOUNT ASSEMBLY	1
3	GA5073810	ALUMINIUM T SLOT EXTRUSION, 30 X 60 X 2mm, 640mm LONG, SUIT CAMERA POST	1
4	GA5004033	BHCS M6 X 12 SS A2-70	2
5	GA5004696	BHCS M8 X 16 SS A2-70	2
6	GA3000716	LED LIGHT MODULE, 3M SECTION, WEED DETECTION, GEN 3, BILBERRY	1
7	GA4526600	MOUNTING BRACKET SUIT BILBERRY SPOTLIGHT FRONT MOUNT	1
8	GA4525112	T SLOT THREADED INSERT, 3 HOLE, M6, STRAIGHT	2
9	GA5004437	WASHER 6mm FLAT SS	2
10	GA5004447	WASHER 6mm SPRING SS	2
11	GA5003651	WASHER 8mm FLAT SS	2
12	GA5004919	WASHER 8mm SPRING SS	2
13	GA5055245	WASHER, NOZZLE CAP SEAL, RUBBER, 19 OD X 9 ID, SUIT TEE JET NOZZLE, REPLACES CP19438-EPR	2
GA6101984 GOLDACRES		ASSEMBLY DRAWING ONLY, BILBERRY FOLDING CAMERA POST, LH CAM13	REV 01

Camera Post Assembly, Bilberry, RH, (CAM 14, 42mt)

BUILD OPTION:
65281 - SPECIALISED LIGHTS FOR NIGHT TIME SPOT SPRAYING

NOTE:
SERIES 3 MACHINES - LIGHTS ARE STANDARD

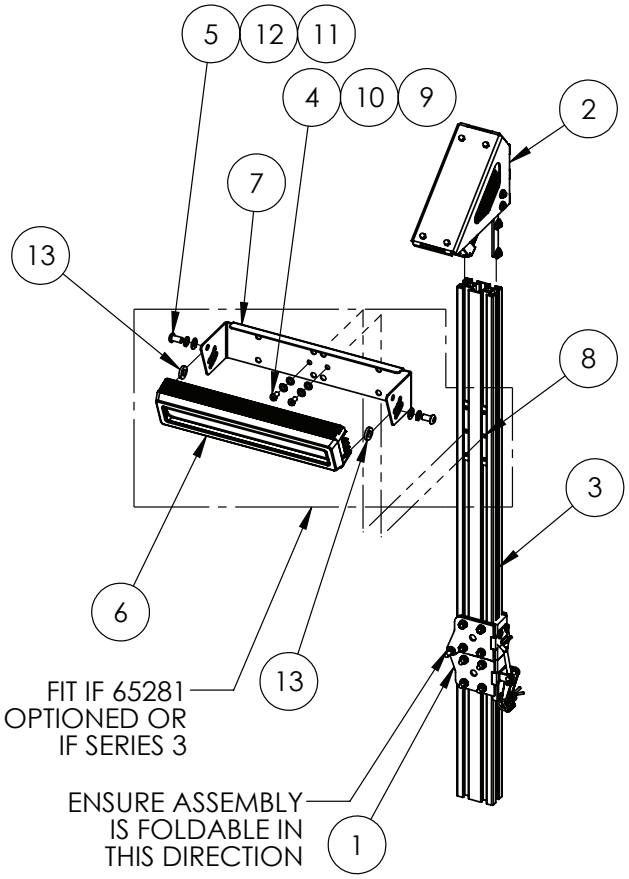

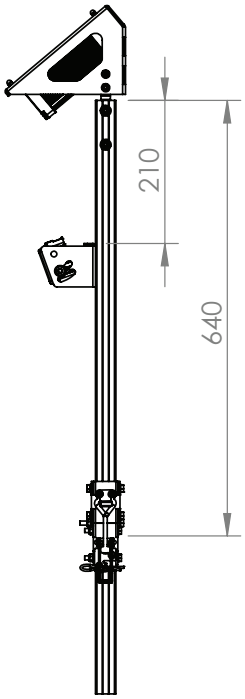

IF DESCRIPTION PREFIX IS ASSEMBLY DRAWING ONLY OR PRODUCTION DRAWING ONLY THE ITEM IS NOT FOR SALE			
ITEM	PART NUMBER	DESCRIPTION	QTY
1	GA4909588	ASSEMBLY DRAWING ONLY, BILBERRY CAM POST LOWER FOLDING ASSEMBLY, 250mm	1
2	GA4912710	ASSEMBLY DRAWING ONLY, BILBERRY CAMERA MOUNT ASSEMBLY	1
3	GA5073810	ALUMINIUM T SLOT EXTRUSION, 30 X 60 X 2mm, 640mm LONG, SUIT CAMERA POST	1
4	GA5004033	BHCS M6 X 12 SS A2-70	2
5	GA5004696	BHCS M8 X 16 SS A2-70	2
6	GA3000716	LED LIGHT MODULE, 3M SECTION, WEED DETECTION, GEN 3, BILBERRY	1
7	GA4526600	MOUNTING BRACKET SUIT BILBERRY SPOTLIGHT FRONT MOUNT	1
8	GA4525112	T SLOT THREADED INSERT, 3 HOLE, M6, STRAIGHT	2
9	GA5004437	WASHER 6mm FLAT SS	2
10	GA5004447	WASHER 6mm SPRING SS	2
11	GA5003651	WASHER 8mm FLAT SS	2
12	GA5004919	WASHER 8mm SPRING SS	2
13	GA5055245	WASHER, NOZZLE CAP SEAL, RUBBER, 19 OD X 9 ID, SUIT TEE JET NOZZLE, REPLACES CP19438-EPR	2
GA6101985 GOLDACRES		ASSEMBLY DRAWING ONLY, BILBERRY FOLDING CAMERA POST, RH CAM14	REV 00

Camera Mount Assembly, Boom, 36mt-48mt, Bilberry

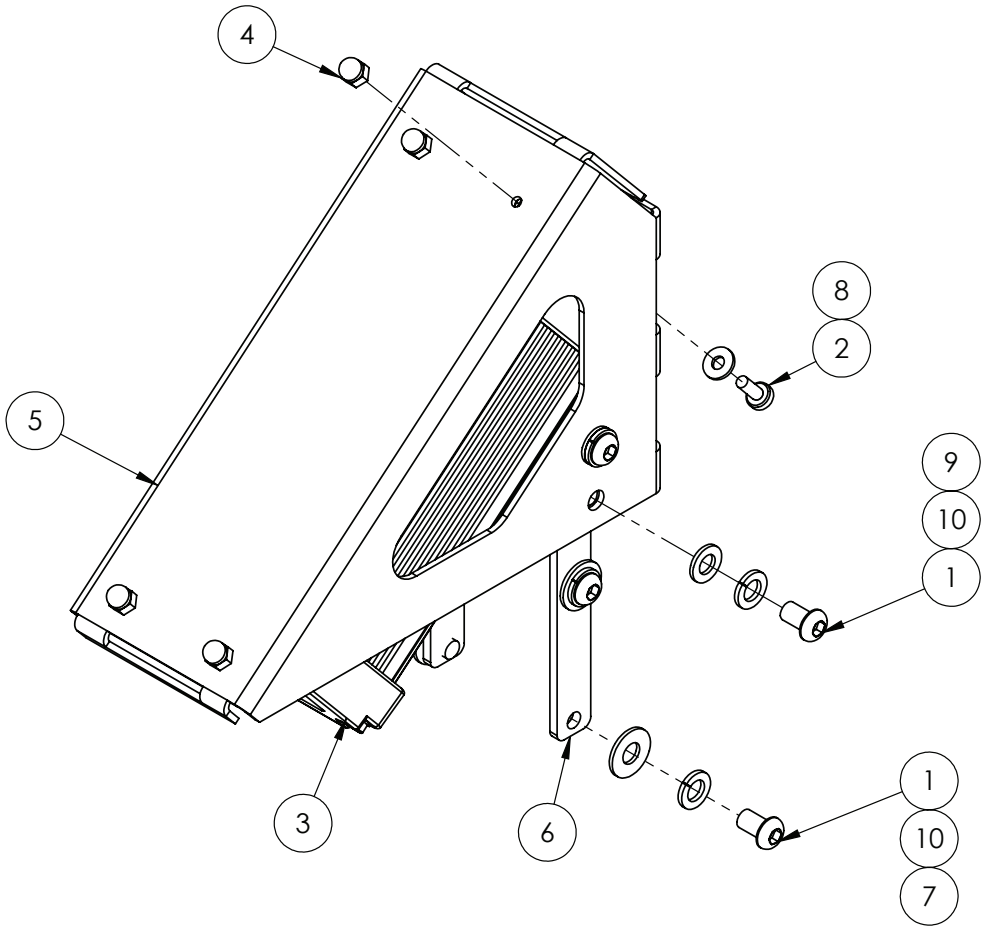

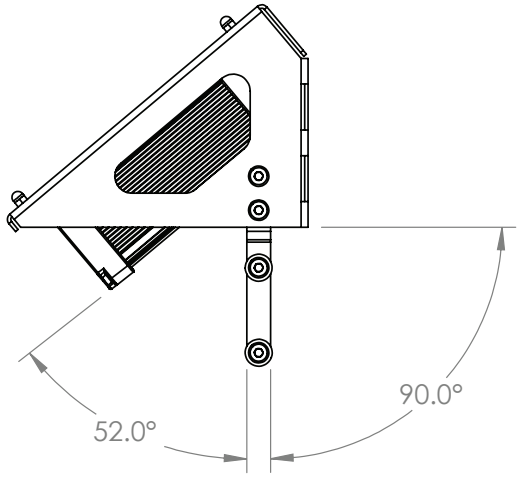

IF DESCRIPTION PREFIX IS ASSEMBLY DRAWING ONLY OR PRODUCTION DRAWING ONLY THE ITEM IS NOT FOR SALE			
ITEM	PART NUMBER	DESCRIPTION	QTY
1	GA5004023	BHCS M6 X 10 SS A2-70	8
2	GA5011360	BOLT PAN HEAD M4 X 10 SS	4
3	GA3001041	CAMERA, BILBERRY, GEN 3, NUMBER 1, BILBERRY, CAM-AG-HK-GEN3	1
4	GA0500114	DOME NUT, M4, 304 SS	4
5	GA4525040	MOUNTING BRACKET, BILBERRY CAMERA, ADJUSTABLE	1
6	GA4525111	T SLOT THREADED INSERT, 4 HOLE, M6, CAMERA MOUNT	2
7	GA5017643	WASHER 1/4 ID X 5/8 OD X 18G FLAT SS	4
8	GA5020510	WASHER 4mm FLAT SS	4
9	GA5004437	WASHER 6mm FLAT SS	4
10	GA5004447	WASHER 6mm SPRING SS	8
GA4912710 GOLDACRES		ASSEMBLY DRAWING ONLY, BILBERRY CAMERA MOUNT ASSEMBLY	REV 02

LOOSE FIT LOWER TWO BOLTS
LOCTITE 243 - TO BE USED ON ALL FITTINGS

Lower Post Assembly, Folding, 250mm, Bilberry

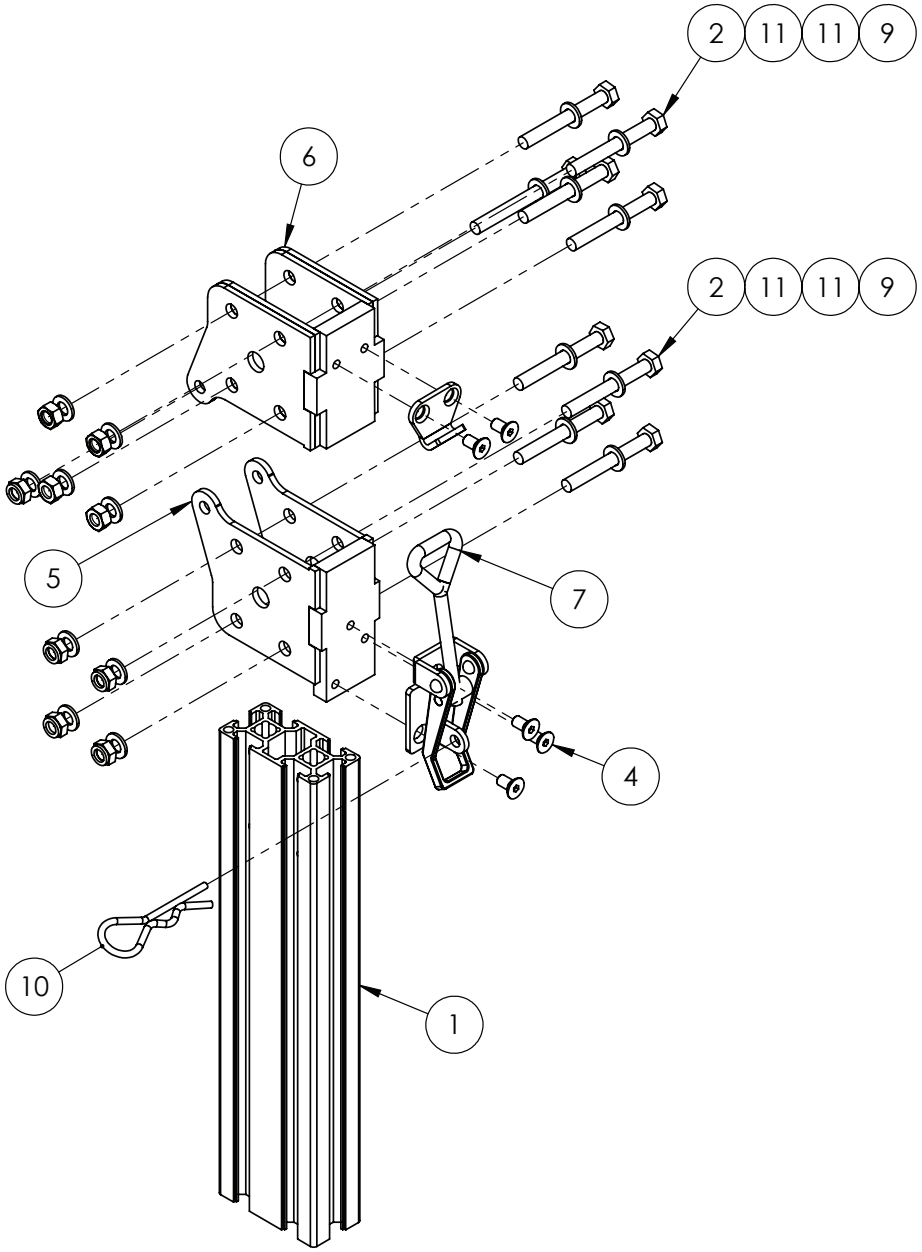

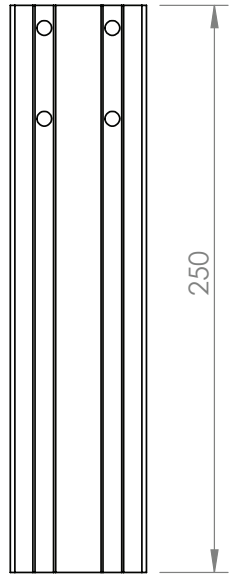

IF DESCRIPTION PREFIX IS ASSEMBLY DRAWING ONLY OR PRODUCTION DRAWING ONLY THE ITEM IS NOT FOR SALE			
ITEM	PART NUMBER	DESCRIPTION	QTY
1	GA5073810	ALUMINIUM T SLOT EXTRUSION, 30 X 60 X 2mm, RADIUS EDGE, 6063 T5, SS3-84937	1
2	GA5011419	BOLT M6 X 50 SS A2-70	8
3	GA0500085	BOLT M6 X 60 SS	1
4	GA0500101	CSCS M5 X 10 SS A2-70	5
5	GA4603502	CAMERA POST MOUNT PIVOT INNER, REMOVABLE, SUIT BILBERRY	1
6	GA4603501	CAMERA POST MOUNT PIVOT OUTER, REMOVABLE, SUIT BILBERRY	1
7	GA5007071	LATCH, INDUCTION HOPPER LID, STAINLESS STEEL	1
8	GA5004397	NUT M6 HEX ZP	4
9	GA5048115	NUT M6 NYLOC ZP	5
10	GA5003487	R CLIP S10 3mm	1
11	GA5004437	WASHER 6mm FLAT SS	18
GA4909588 GOLDACRES		ASSEMBLY DRAWING ONLY, BILBERRY CAM POST LOWER FOLDING ASSEMBLY, 250mm	REV 00

Outer Camera Mount, Bilberry

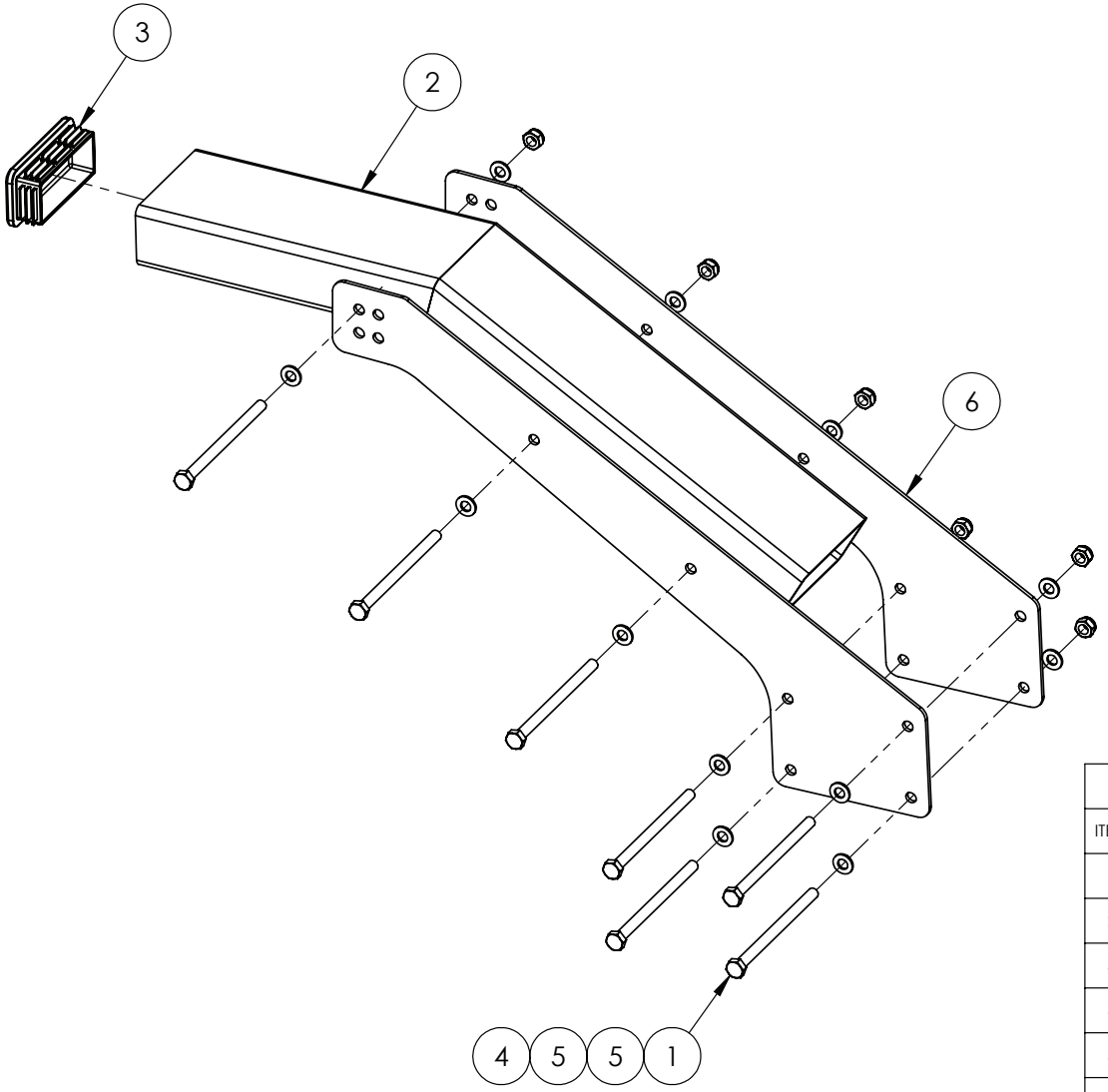

IF DESCRIPTION PREFIX IS ASSEMBLY DRAWING ONLY OR PRODUCTION DRAWING ONLY THE ITEM IS NOT FOR SALE			
ITEM	PART NUMBER	DESCRIPTION	QTY
1	GA5011501	BOLT M8 X 120 GR8.8 ZP	7
2	GA4603497	CAMERA MOUNT, OUTER RHS SUPPORT BILBERRY SUIT G6 MY20	1
3	GA5078601	END CAP, PLASTIC, BLACK, INSERT, RHS. 100 X 50, 2.0 - 4.0mm WALL	1
4	GA5004917	NUT M8 NYLOC ZP	7
5	GA5003643	WASHER M8 FLAT SS HD	14
6	GA4526595	MOUNTING PLATE, OUTER ARM LOWER SUPPORT, BILBERRY CAMERA	2
GA4909563 GOLDACRES		ASSEMBLY DRAWING ONLY, BILBERRY OUTER CAMERA MOUNT ARM SUIT 100mm SHS	REV 00

Camera Positioning, LH, 48mt, Bilberry

HEIGHT OF CAMERA TO NOZZLE = 1200mm
HEIGHT OF NOZZLE TO GROUND LEVEL = 700mm
TOTAL HEIGHT OF ALL CAMERAS TO GROUND LEVEL = 1900mm

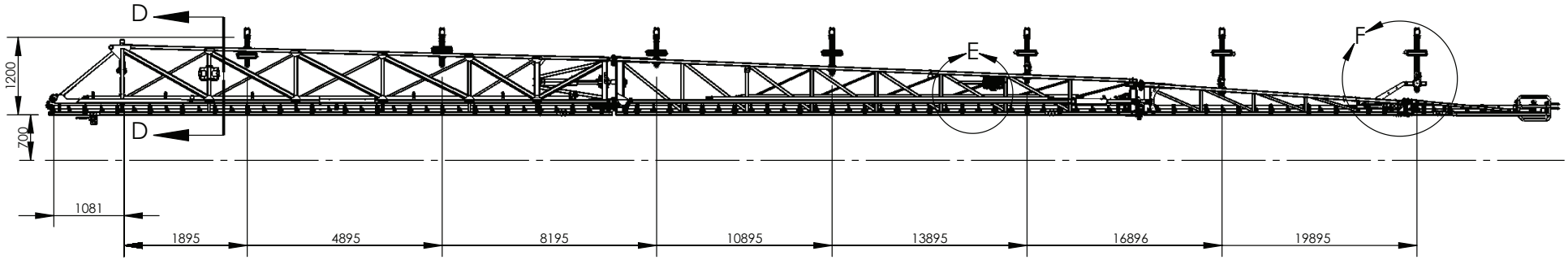

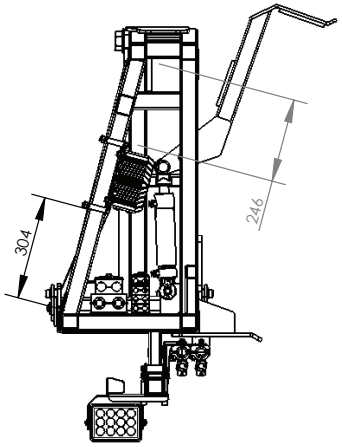

SECTION D-D

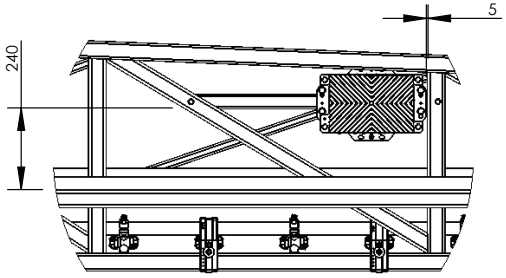

DETAIL E

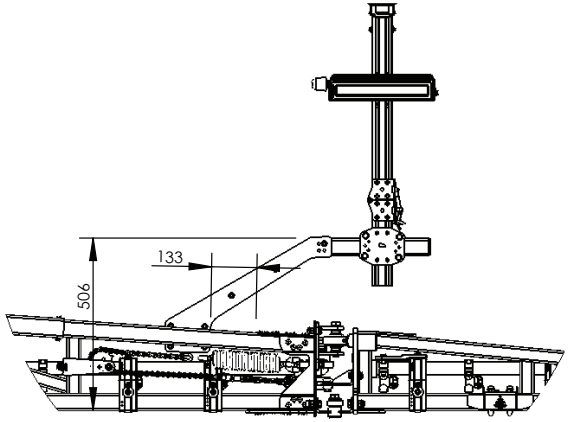

DETAIL F

GA6101992-14 GOLDACRES	ASSEMBLY DRAWING ONLY, BOOM WING, 48M LH	REV 00.A

Camera Positioning, RH, 48mt, Bilberry

HEIGHT OF CAMERA TO NOZZLE = 1200mm
HEIGHT OF NOZZLE TO GROUND LEVEL = 700mm
TOTAL HEIGHT OF ALL CAMERAS TO GROUND LEVEL = 1900mm

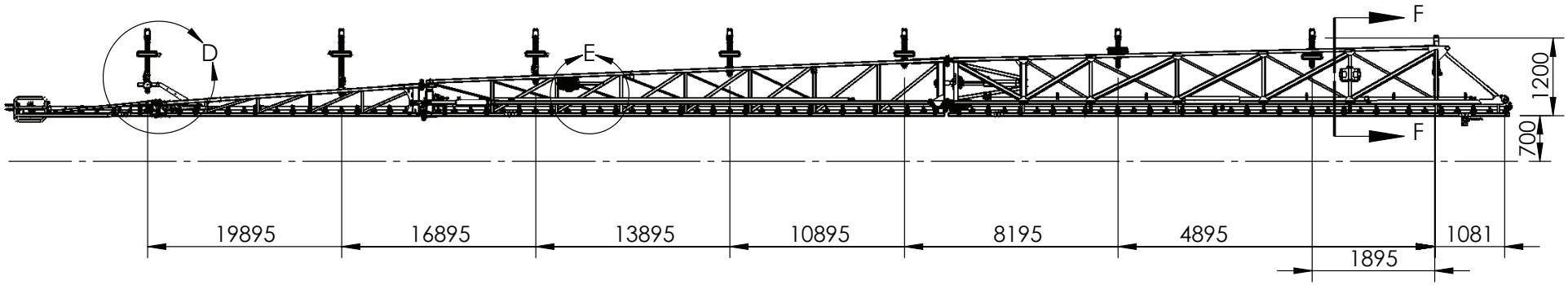

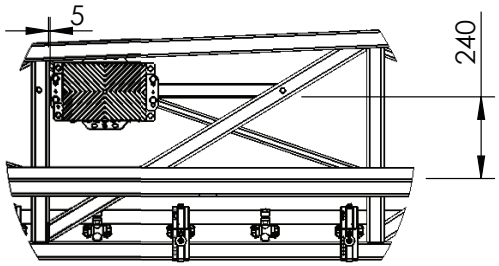

DETAIL E

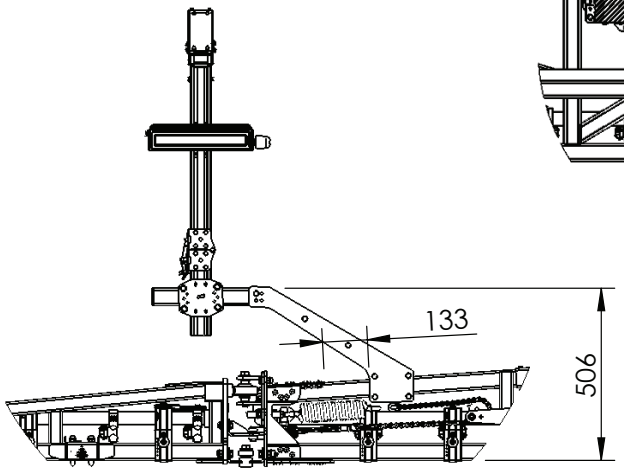

DETAIL D

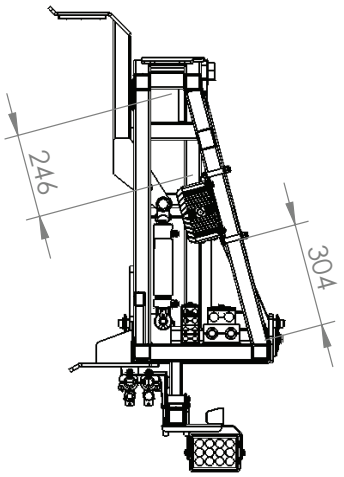

SECTION F-F

GA6101993-14 GOLDACRES	ASSEMBLY DRAWING ONLY. BOOM WING, 48M RH	REV 00.A

Bilberry Cameras, CALC Module Mounting, LH Boom Wing, 48mt

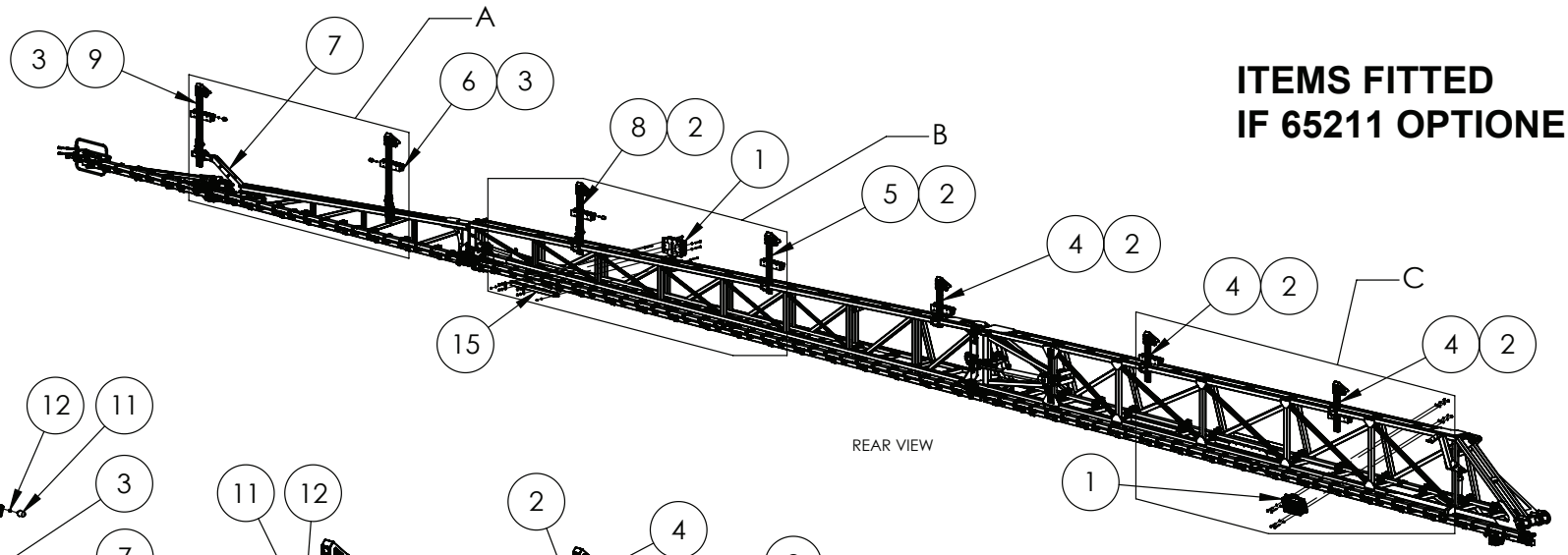

ITEMS FITTED
IF 65211 OPTIONED

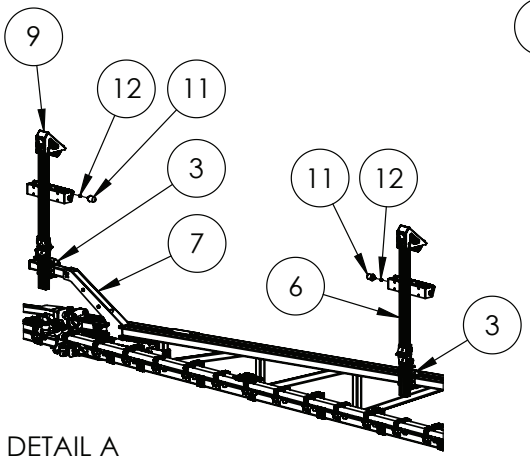

DETAIL A

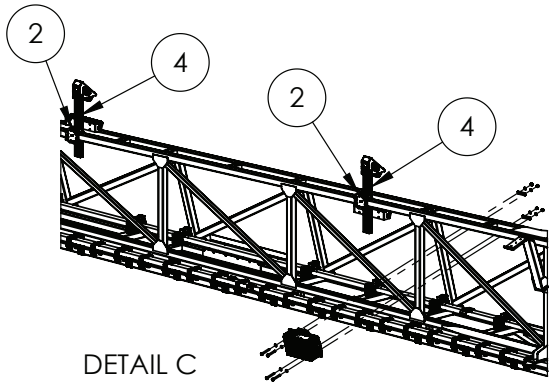

DETAIL C

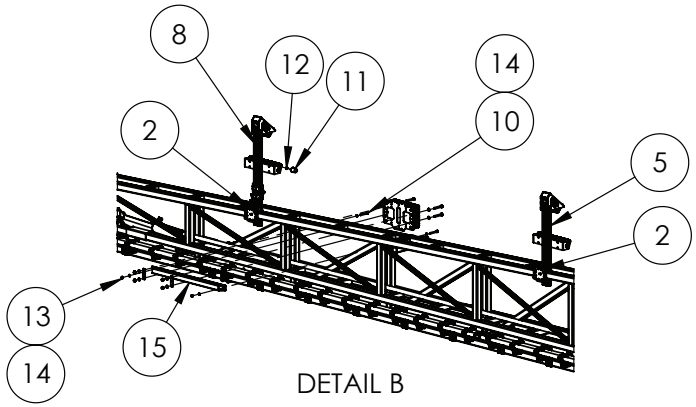

DETAIL B

IF DESCRIPTION PREFIX IS ASSEMBLY DRAWING ONLY OR PRODUCTION DRAWING ONLY THE ITEM IS NOT FOR SALE			
ITEM	PART NUMBER	DESCRIPTION	QTY
1	GA4912820	ASSEMBLY DRAWING ONLY, BILBERRY CALC MODULE MOUNT GEN 3	2
2	GA4909580	ASSEMBLY DRAWING ONLY, BILBERRY CAM POST BOOM MOUNT, LH TRITECH, FRONT	5
3	GA4909574	ASSEMBLY DRAWING ONLY, BILBERRY CAM POST BOOM MOUNT, LH TRITECH, REAR	2
4	GA6101955	ASSEMBLY DRAWING ONLY, BILBERRY CAMERA POST CAM03/CAM04	3
5	GA6101956	ASSEMBLY DRAWING ONLY, BILBERRY CAMERA POST CAM05/CAM06	1
6	GA6101984	ASSEMBLY DRAWING ONLY, BILBERRY FOLDING CAMERA POST, LH CAM13	1
7	GA4909469	ASSEMBLY DRAWING ONLY, BILBERRY OUTER CAMERA MOUNT ARM SUIT 50mm SHS	1
8	GA6101961	ASSEMBLY DRAWING ONLY, BILBERRY CAMERA POST FOLDING RH CAM08 ASSEMBLY FITTED	1
9	GA6101962	ASSEMBLY DRAWING ONLY, BILBERRY CAMERA POST FOLDING RH CAM10 ASSEMBLY FITTED	1
10	GA5004738	BOLT M8 X 70 GR8.8 ZP	2
11	GA5075600	BUFFER, ISOLATOR, SUIT CLAAS CABIN DOOR AND OIL TANK FRAME, 076 722.1	3
12	GA5011499	NUT M8 HEX ZP	3
13	GA5004917	NUT M8 NYLOC ZP	2
14	GA5003643	WASHER M8 FLAT SS HD	4
15	GA4800038	MODULE MOUNTING BAR	1
GA6101922-14 GOLDACRES		ASSEMBLY DRAWING ONLY, BOOM WING, 48M LH	REV 00.A

Bilberry Cameras, CALC Module Mounting, RH Boom Wing, 48mt

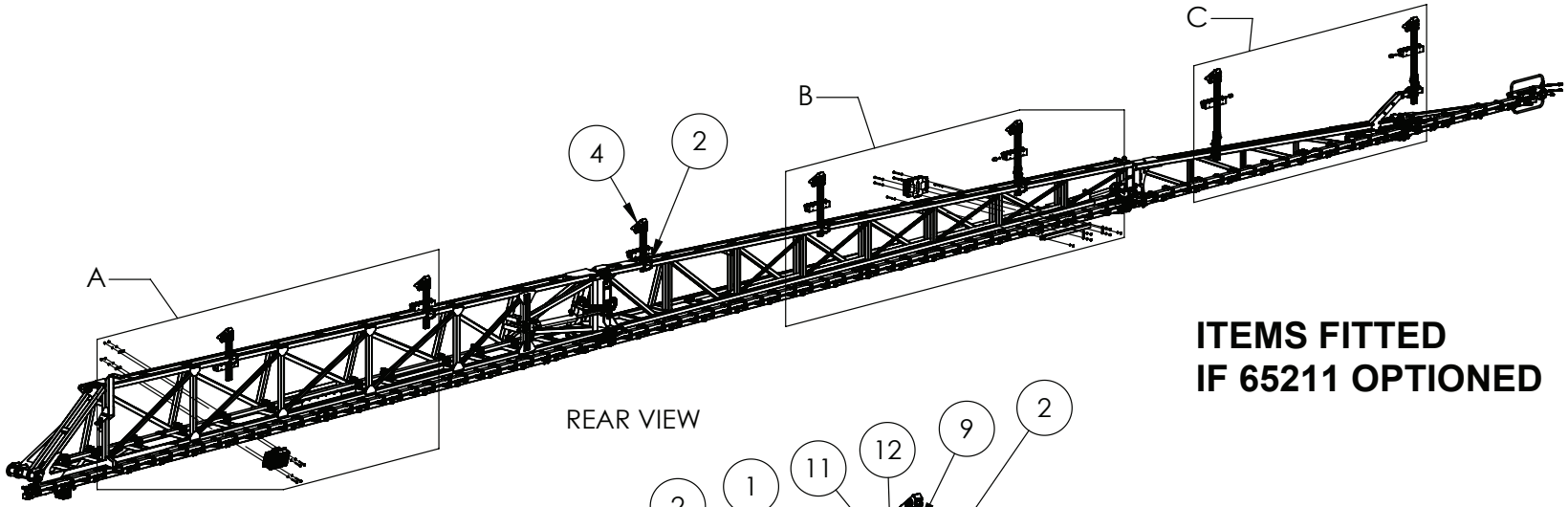

REAR VIEW

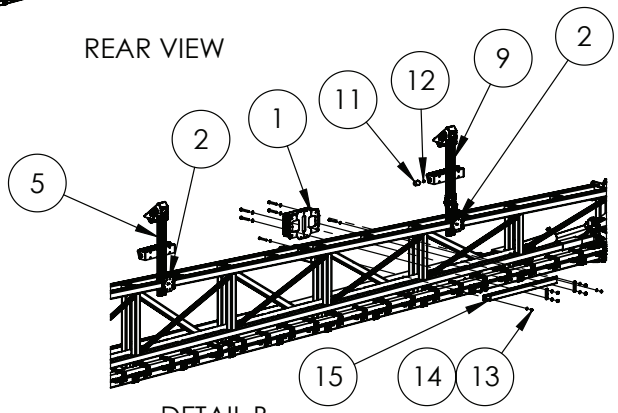

DETAIL B

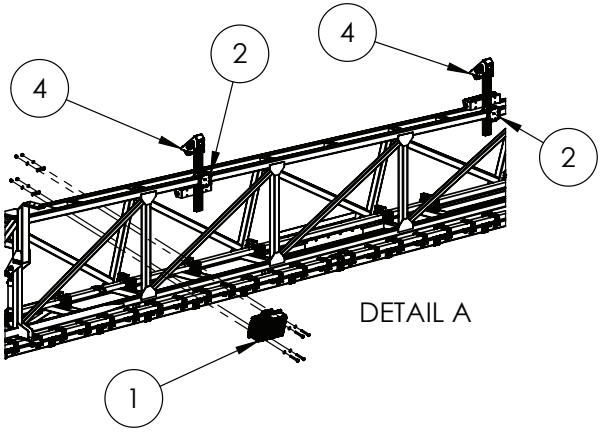

DETAIL A

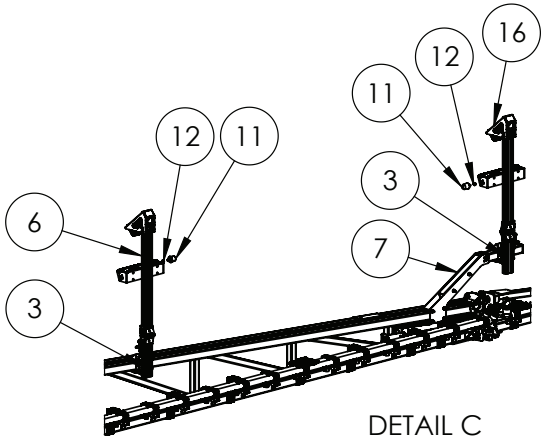

DETAIL C

ITEMS FITTED
IF 65211 OPTIONED

IF DESCRIPTION PREFIX IS ASSEMBLY DRAWING ONLY OR PRODUCTION DRAWING ONLY THE ITEM IS NOT FOR SALE			
ITEM	PART NUMBER	DESCRIPTION	QTY
1	GA4912820	ASSEMBLY DRAWING ONLY, BILBERRY CALC MODULE MOUNT GEN 3	2
2	GA4909581	ASSEMBLY DRAWING ONLY, BILBERRY CAM POST BOOM MOUNT, RH TRITECH, FRONT	5
3	GA4909575	ASSEMBLY DRAWING ONLY, BILBERRY CAM POST BOOM MOUNT, RH TRITECH, REAR	2
4	GA6101955	ASSEMBLY DRAWING ONLY, BILBERRY CAMERA POST CAM03/CAM04	3
5	GA6101956	ASSEMBLY DRAWING ONLY, BILBERRY CAMERA POST CAM05/CAM06	1
6	GA6101985	ASSEMBLY DRAWING ONLY, BILBERRY FOLDING CAMERA POST, RH CAM14	1
7	GA4909469	ASSEMBLY DRAWING ONLY, BILBERRY OUTER CAMERA MOUNT ARM SUIT 50mm SHS	1
16	GA6101958	ASSEMBLY DRAWING ONLY, BILBERRY CAMERA POST FOLDING CAM09 LH ASSEMBLY FITTED	1
9	GA6101957	ASSEMBLY DRAWING ONLY, BILBERRY CAMERA POST FOLDING LH CAM07 ASSEMBLY FITTED	1
10	GA5004738	BOLT M8 X 70 GR8.8 ZP	2
11	GA5075600	BUFFER, ISOLATOR, SUIT CLAAS CABIN DOOR AND OIL TANK FRAME, 076 722.1	3
12	GA5011499	NUT M8 HEX ZP	3
13	GA5004917	NUT M8 NYLOC ZP	2
14	GA5003643	WASHER M8 FLAT SS HD	4
15	GA4800038	MODULE MOUNTING BAR	1
GA6101993-14 GOLDACRES		ASSEMBLY DRAWING ONLY. BOOM WING, 48M RH	REV 00.A

CR2050 Module Mounting, LH, 48mt, Bilberry

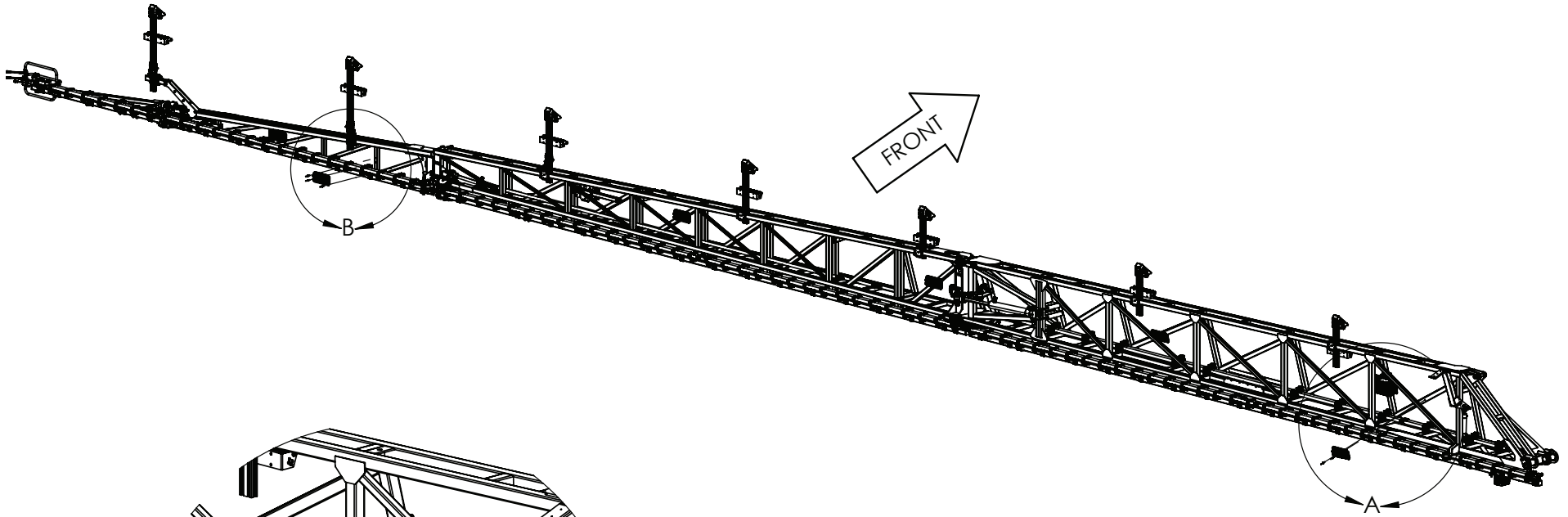

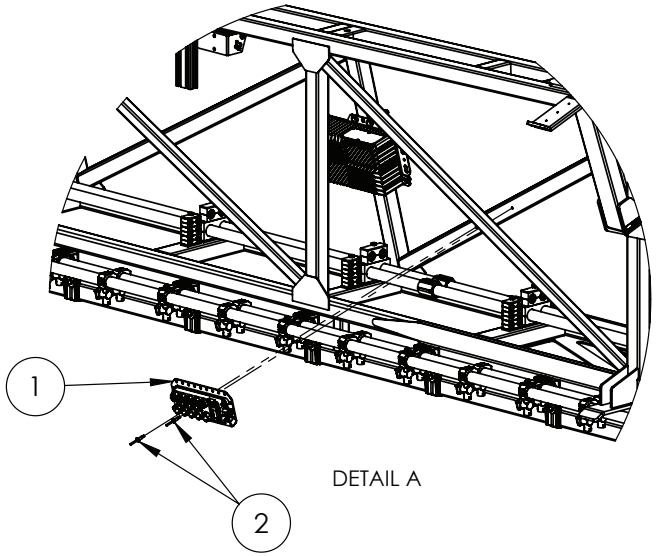

DETAIL A

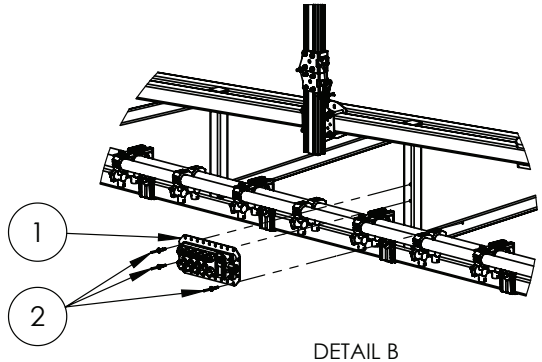

DETAIL B

OPTION CODE:
65322 - GOLDACRES INDIVIDUAL NOZZLE CONTROL

IF DESCRIPTION PREFIX IS ASSEMBLY DRAWING ONLY OR PRODUCTION DRAWING ONLY THE ITEM IS NOT FOR SALE			
ITEM	PART NUMBER	DESCRIPTION	QTY
1	GA4909598	ASSEMBLY DRAWING ONLY, MOUNTING PLATE ASSEMBLY, CR2050 SERIES IFM I/O MODULE	6
2	GA0500080	RIVET, 1/4" DIA, 4.7 - 11.1mm GRIP RANGE, STEEL, HUCKLOK	14
GA6101922-15 GOLDACRES		ASSEMBLY DRAWING ONLY, BOOM WING, 48M LH	REV 00

CR2050 Module Mounting, RH, 48mt, Bilberry

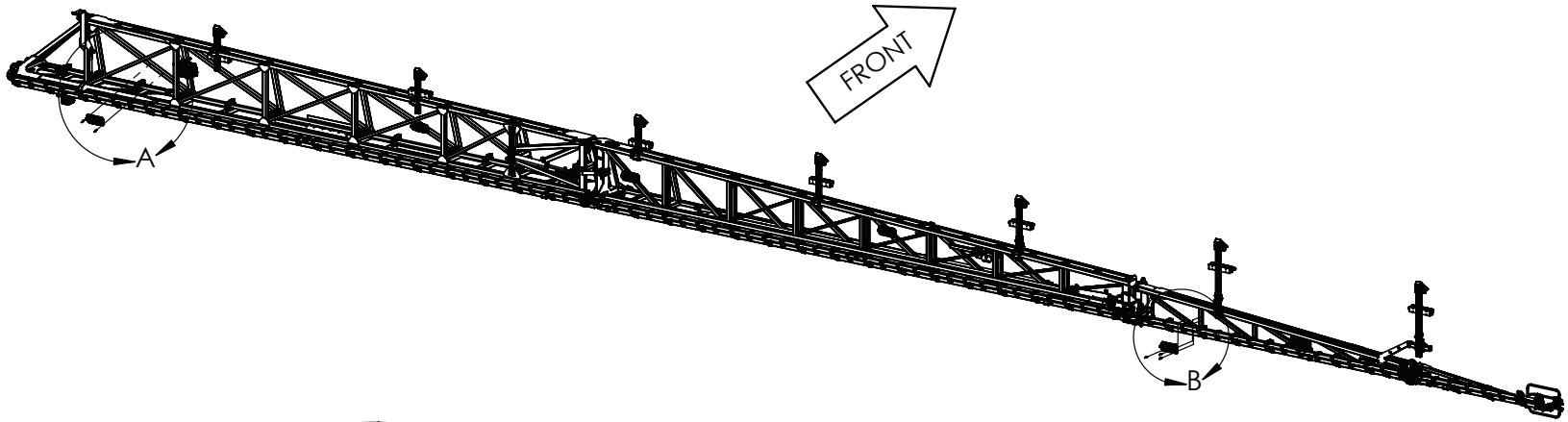

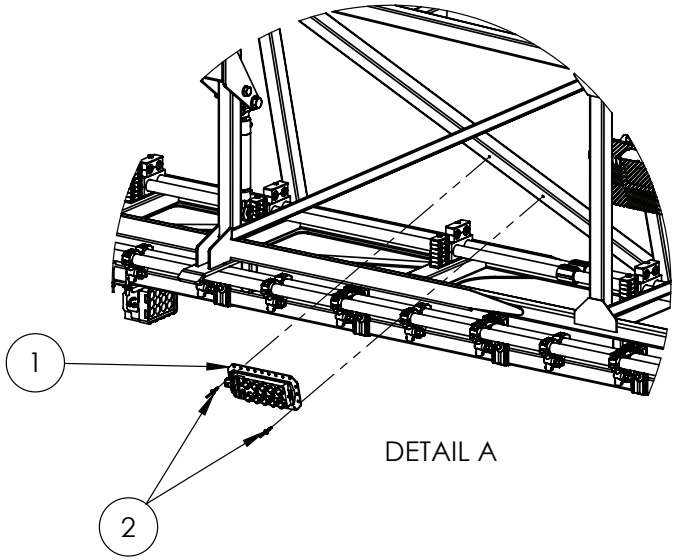

DETAIL A

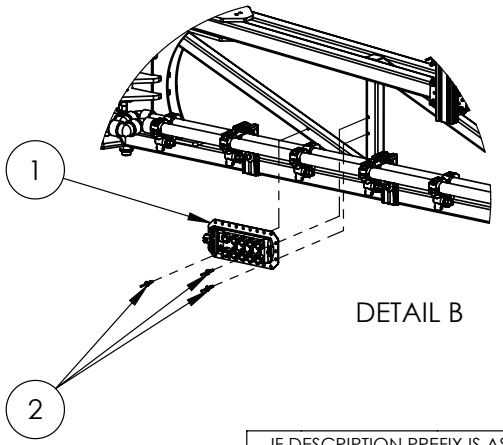

DETAIL B

OPTION CODE:
65322 - GOLDACRES INDIVIDUAL NOZZLE CONTROL

IF DESCRIPTION PREFIX IS ASSEMBLY DRAWING ONLY OR PRODUCTION DRAWING ONLY THE ITEM IS NOT FOR SALE			
ITEM	PART NUMBER	DESCRIPTION	QTY
1	GA4909598	ASSEMBLY DRAWING ONLY, MOUNTING PLATE ASSEMBLY, CR2050 SERIES IFM I/O MODULE	6
2	GA0500080	RIVET, 1/4" DIA, 4.7 - 11.1mm GRIP RANGE, STEEL, HUCKLOK	14
GA6101993-15 GOLDACRES		ASSEMBLY DRAWING ONLY. BOOM WING, 48M RH	REV 00

CR2050 Module Positions, LH, 48mt, Bilberry

OPTION CODE:
65322 - GOLDACRES INDIVIDUAL NOZZLE CONTROL

REAR VIEW

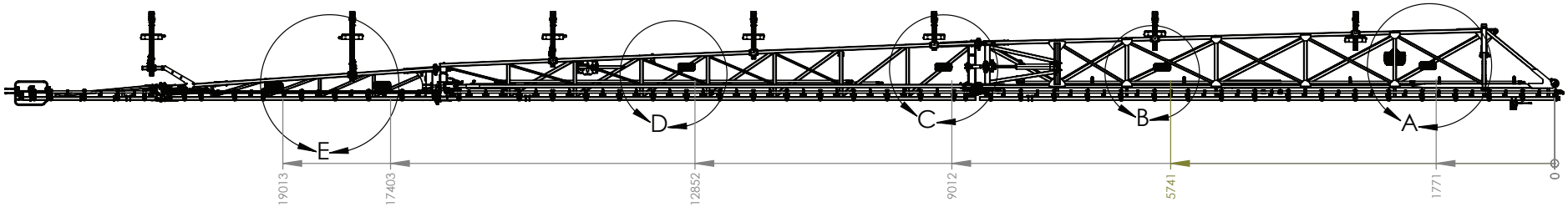

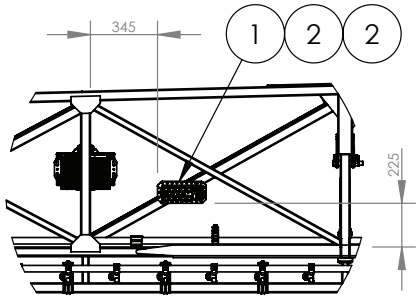

DETAIL A

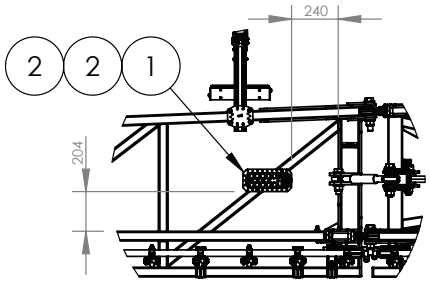

DETAIL C

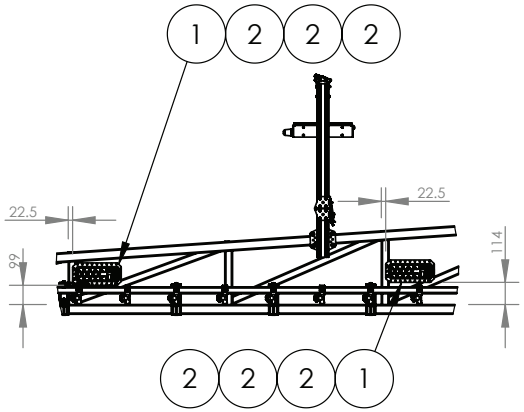

DETAIL E

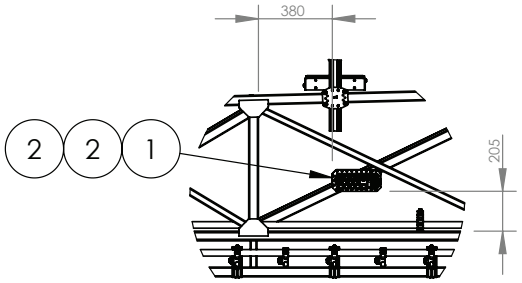

DETAIL B

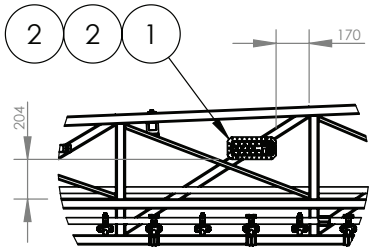

DETAIL D

IF DESCRIPTION PREFIX IS ASSEMBLY DRAWING ONLY OR PRODUCTION DRAWING ONLY THE ITEM IS NOT FOR SALE			
ITEM	PART NUMBER	DESCRIPTION	QTY
1	GA4909598	ASSEMBLY DRAWING ONLY, MOUNTING PLATE ASSEMBLY, CR2050 SERIES IFM I/O MODULE	6
2	GA0500080	RIVET, 1/4" DIA, 4.7 - 11.1mm GRIP RANGE, STEEL, HUCKLOK	14
GA6101922-15 GOLDACRES		ASSEMBLY DRAWING ONLY, BOOM WING, 48M LH	REV 00

CR2050 Module Positions, RH, 48mt, Bilberry

REAR VIEW

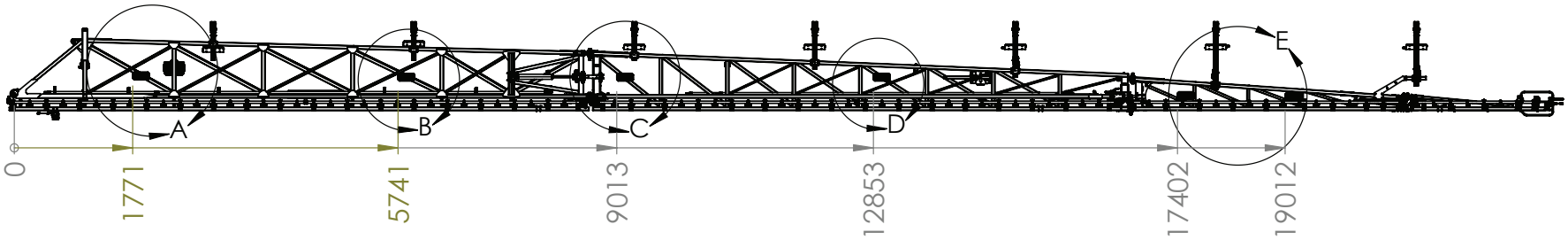

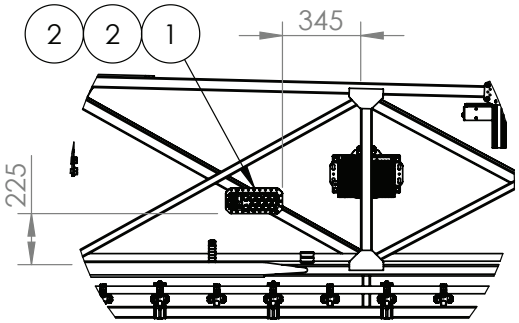

DETAIL A

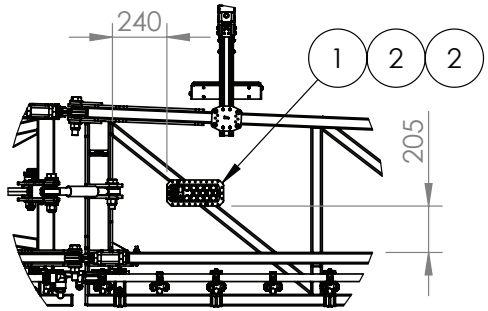

DETAIL C

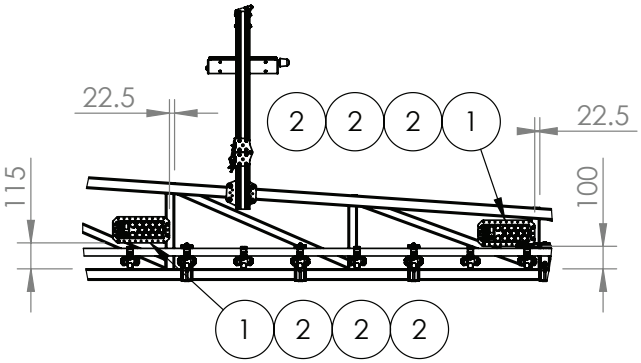

DETAIL E

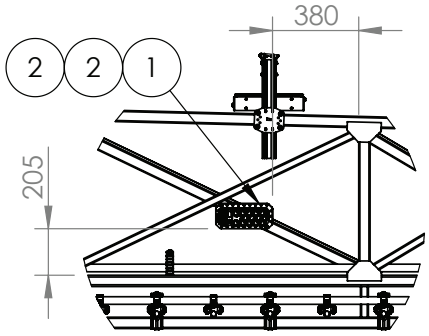

DETAIL B

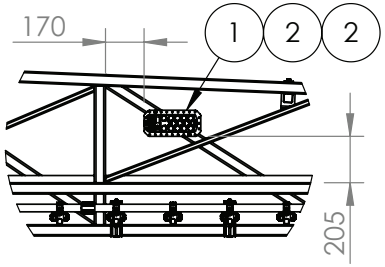

DETAIL D

IF DESCRIPTION PREFIX IS ASSEMBLY DRAWING ONLY OR PRODUCTION DRAWING ONLY THE ITEM IS NOT FOR SALE			
ITEM	PART NUMBER	DESCRIPTION	QTY
1	GA4909598	ASSEMBLY DRAWING ONLY, MOUNTING PLATE ASSEMBLY, CR2050 SERIES IFM I/O MODULE	6
2	GA0500080	RIVET, 1/4" DIA, 4.7 - 11.1mm GRIP RANGE, STEEL, HUCKLOK	14
GA6101993-15 GOLDACRES		ASSEMBLY DRAWING ONLY. BOOM WING, 48M RH	REV 00

Camera Post Assembly, Bilberry, (Camera 3 & 4, 48mt)

BUILD OPTION:
65276 - SPECIALISED LIGHTS FOR NIGHT TIME SPOT SPRAYING

NOTE:
SERIES 3 MACHINES - LIGHTS ARE STANDARD

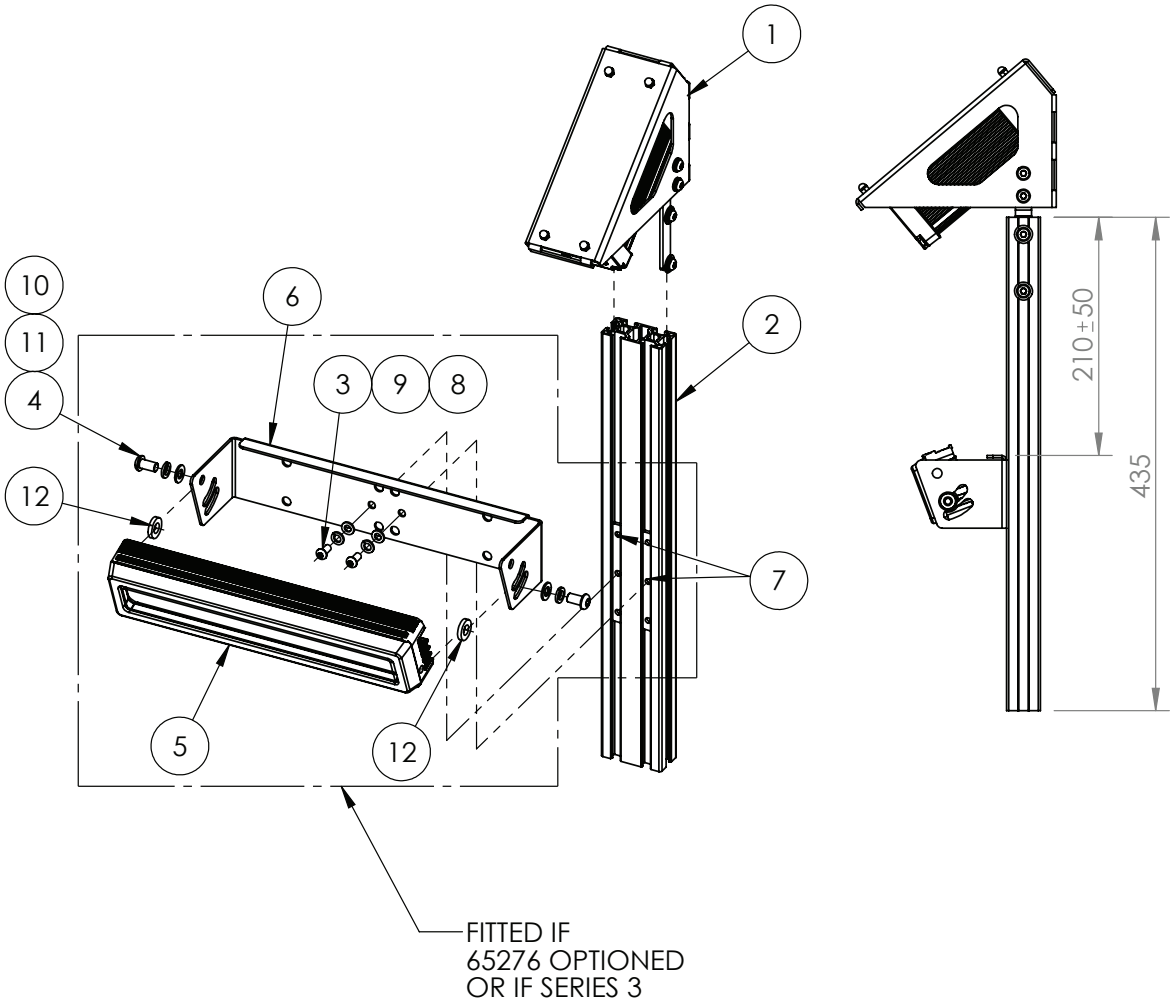

IF DESCRIPTION PREFIX IS ASSEMBLY DRAWING ONLY OR PRODUCTION DRAWING ONLY THE ITEM IS NOT FOR SALE			
ITEM	PART NUMBER	DESCRIPTION	QTY
1	GA4912710	ASSEMBLY DRAWING ONLY, BILBERRY CAMERA MOUNT ASSEMBLY	1
2	GA5073810	ALUMINIUM T SLOT EXTRUSION, 30 X 60 X 2mm, RADIUS EDGE, 6063 T5, SS3-84937	1
3	GA5004033	BHCS M6 X 12 SS A2-70	2
4	GA5004696	BHCS M8 X 16 SS A2-70	2
5	GA3000716	LED LIGHT MODULE, 3M SECTION, WEED DETECTION, GEN 3, BILBERRY	1
6	GA4526600	MOUNTING BRACKET SUIT BILBERRY SPOTLIGHT FRONT MOUNT	1
7	GA4525112	T SLOT THREADED INSERT, 3 HOLE, M6, STRAIGHT	2
8	GA5004437	WASHER 6mm FLAT SS	2
9	GA5004447	WASHER 6mm SPRING SS	2
10	GA5003643	WASHER 8mm FLAT SS HD	2
11	GA5004919	WASHER 8mm SPRING SS	2
12	GA5055245	WASHER, NOZZLE CAP SEAL, RUBBER, 19 OD X 9 ID, SUIT TEE JET NOZZLE, REPLACES CP19438-EPR	2
GA6101955 GOLDACRES		ASSEMBLY DRAWING ONLY, BILBERRY CAMERA POST CAM03/CAM04	REV 02

Camera Post Assembly, Bilberry, (Camera 5 & 6, 48mt)

BUILD OPTION:
65276 - SPECIALISED LIGHTS FOR NIGHT TIME SPOT SPRAYING

NOTE:
SERIES 3 MACHINES - LIGHTS ARE STANDARD

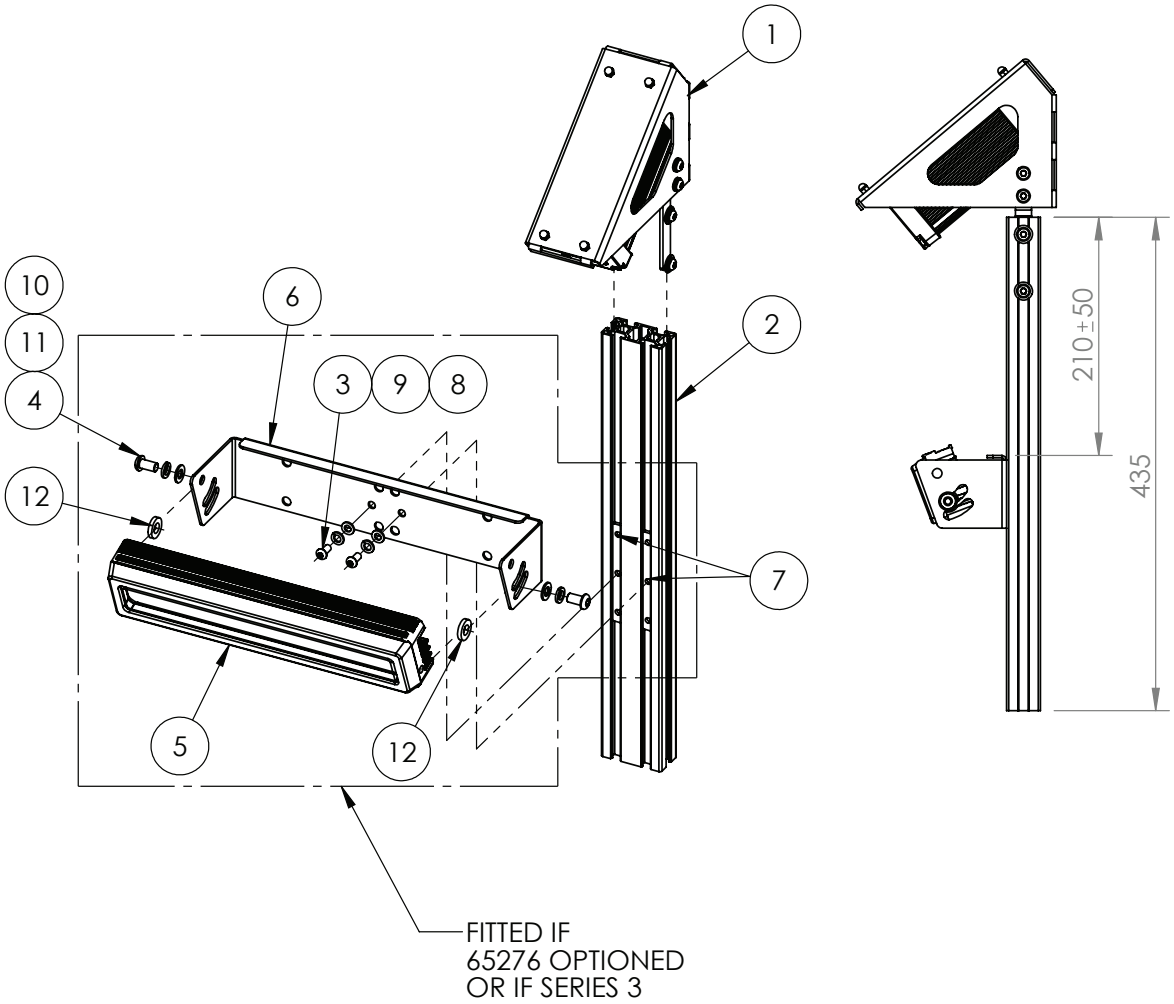

IF DESCRIPTION PREFIX IS ASSEMBLY DRAWING ONLY OR PRODUCTION DRAWING ONLY THE ITEM IS NOT FOR SALE			
ITEM	PART NUMBER	DESCRIPTION	QTY
1	GA4912710	ASSEMBLY DRAWING ONLY, BILBERRY CAMERA MOUNT ASSEMBLY	1
2	GA5073810	ALUMINIUM T SLOT EXTRUSION, 30 X 60 X 2mm, RADIUS EDGE, 6063 T5, SS3-84937	1
3	GA5004033	BHCS M6 X 12 SS A2-70	2
4	GA5004696	BHCS M8 X 16 SS A2-70	2
5	GA3000716	LED LIGHT MODULE, 3M SECTION, WEED DETECTION, GEN 3, BILBERRY	1
6	GA4526600	MOUNTING BRACKET SUIT BILBERRY SPOTLIGHT FRONT MOUNT	1
7	GA4525112	T SLOT THREADED INSERT, 3 HOLE, M6, STRAIGHT	2
8	GA5004437	WASHER 6mm FLAT SS	2
9	GA5004447	WASHER 6mm SPRING SS	2
10	GA5003643	WASHER 8mm FLAT SS HD	2
11	GA5004919	WASHER 8mm SPRING SS	2
12	GA5055245	WASHER, NOZZLE CAP SEAL, RUBBER, 19 OD X 9 ID, SUIT TEE JET NOZZLE, REPLACES CP19438-EPR	2
GA6101955 GOLDACRES		ASSEMBLY DRAWING ONLY, BILBERRY CAMERA POST CAM03/CAM04	REV 02

Camera Post Assembly, Bilberry, (Camera 7 & 8, 48mt)

BUILD OPTION:
65276 - SPECIALISED LIGHTS FOR NIGHT TIME SPOT SPRAYING

NOTE:
SERIES 3 MACHINES - LIGHTS ARE STANDARD

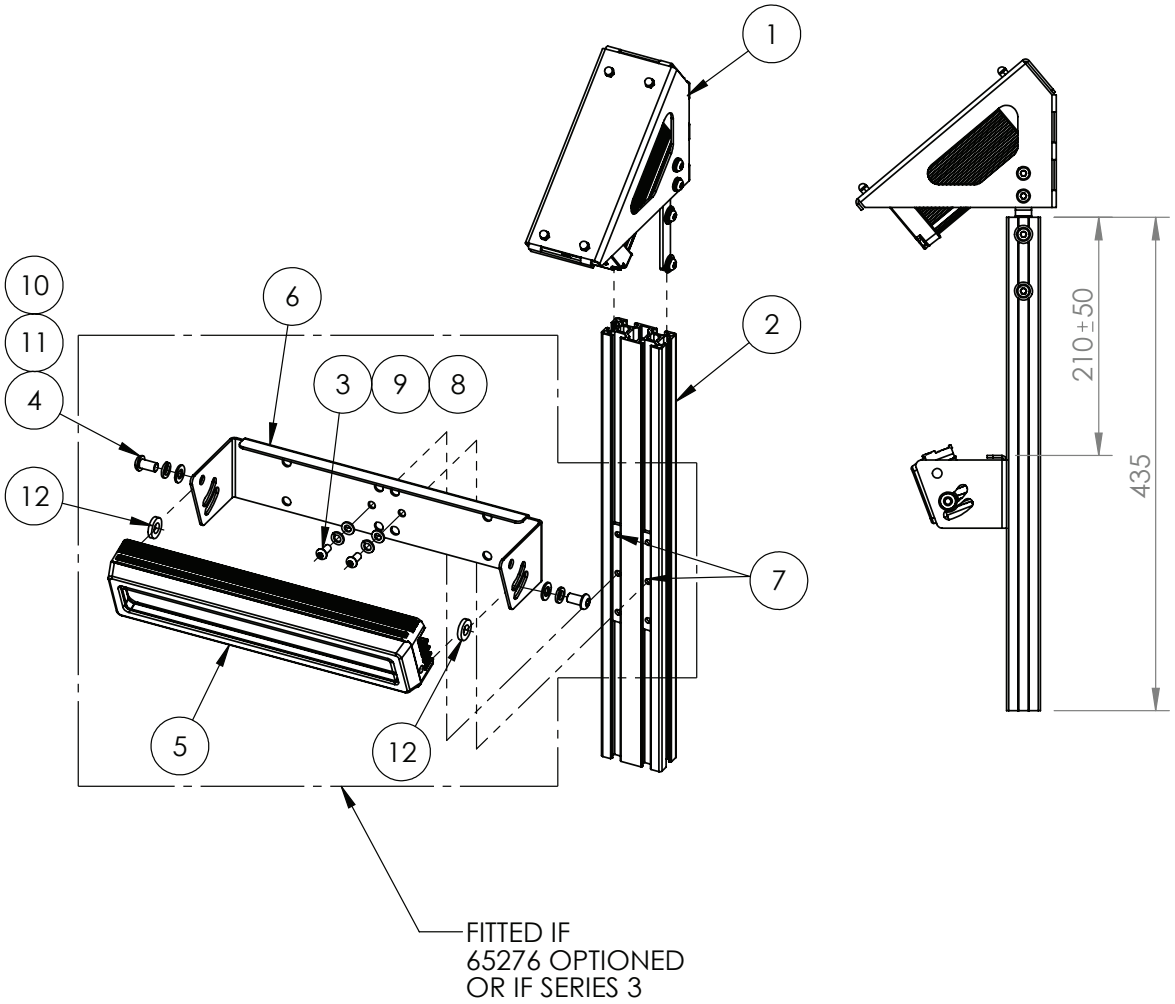

IF DESCRIPTION PREFIX IS ASSEMBLY DRAWING ONLY OR PRODUCTION DRAWING ONLY THE ITEM IS NOT FOR SALE			
ITEM	PART NUMBER	DESCRIPTION	QTY
1	GA4912710	ASSEMBLY DRAWING ONLY, BILBERRY CAMERA MOUNT ASSEMBLY	1
2	GA5073810	ALUMINIUM T SLOT EXTRUSION, 30 X 60 X 2mm, RADIUS EDGE, 6063 T5, SS3-84937	1
3	GA5004033	BHCS M6 X 12 SS A2-70	2
4	GA5004696	BHCS M8 X 16 SS A2-70	2
5	GA3000716	LED LIGHT MODULE, 3M SECTION, WEED DETECTION, GEN 3, BILBERRY	1
6	GA4526600	MOUNTING BRACKET SUIT BILBERRY SPOTLIGHT FRONT MOUNT	1
7	GA4525112	T SLOT THREADED INSERT, 3 HOLE, M6, STRAIGHT	2
8	GA5004437	WASHER 6mm FLAT SS	2
9	GA5004447	WASHER 6mm SPRING SS	2
10	GA5003643	WASHER 8mm FLAT SS HD	2
11	GA5004919	WASHER 8mm SPRING SS	2
12	GA5055245	WASHER, NOZZLE CAP SEAL, RUBBER, 19 OD X 9 ID, SUIT TEE JET NOZZLE, REPLACES CP19438-EPR	2
GA6101955 GOLDACRES		ASSEMBLY DRAWING ONLY, BILBERRY CAMERA POST CAM03/CAM04	REV 02

Camera Post Assembly, Bilberry, (Camera 9 & 10, 48mt)

BUILD OPTION:
65276 - SPECIALISED LIGHTS FOR NIGHT TIME SPOT SPRAYING

NOTE:
SERIES 3 MACHINES - LIGHTS ARE STANDARD

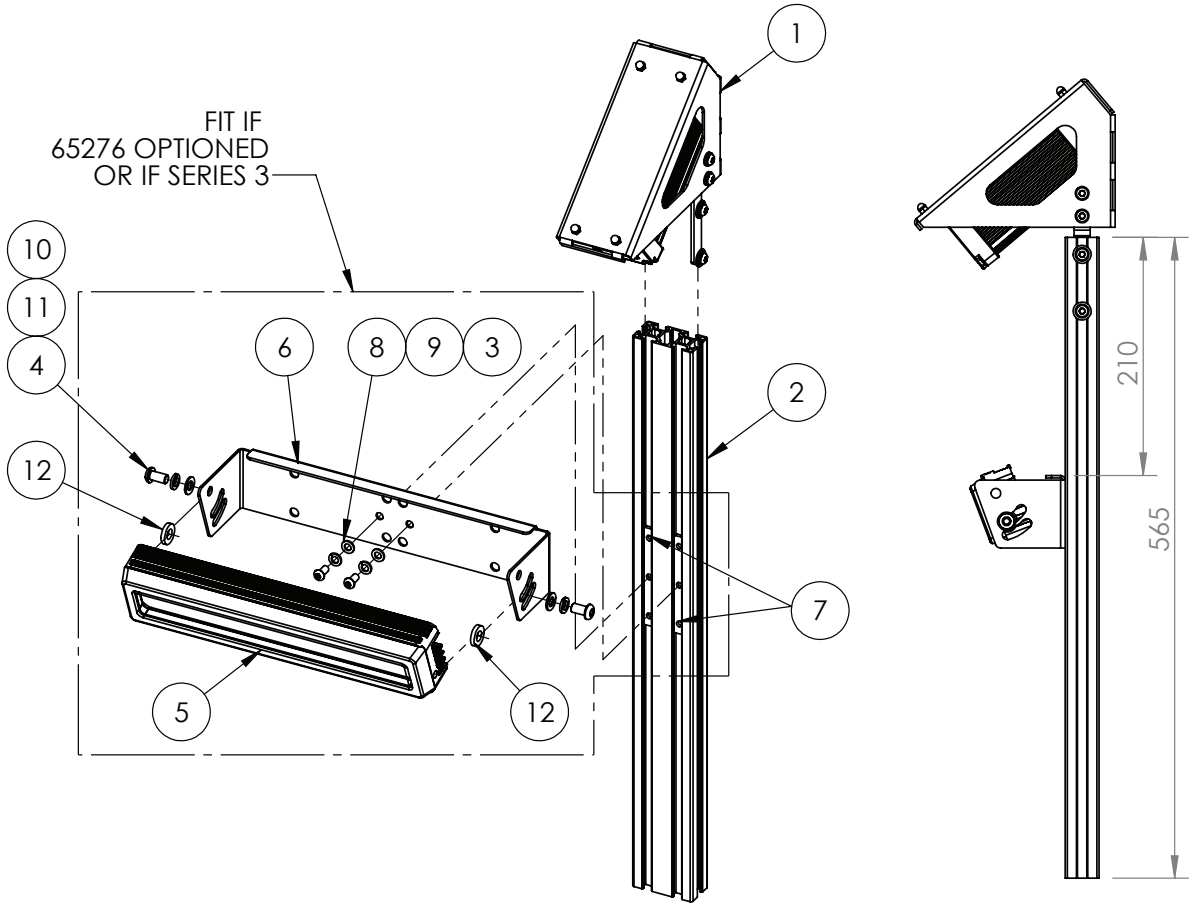

IF DESCRIPTION PREFIX IS ASSEMBLY DRAWING ONLY OR PRODUCTION DRAWING ONLY THE ITEM IS NOT FOR SALE			
ITEM	PART NUMBER	DESCRIPTION	QTY
1	GA4912710	ASSEMBLY DRAWING ONLY, BILBERRY CAMERA MOUNT ASSEMBLY	1
2	GA4703101	ALUMINIUM T SLOT EXTRUSION, 30 X 60 X 2mm, RADIUS EDGE, 6063 T5, SS3-84937	1
3	GA5004033	BHCS M6 X 12 SS A2-70	2
4	GA5004696	BHCS M8 X 16 SS A2-70	2
5	GA3000716	LED LIGHT MODULE, 3M SECTION, WEED DETECTION, GEN 3, BILBERRY	1
6	GA4526600	MOUNTING BRACKET SUIT BILBERRY SPOTLIGHT FRONT MOUNT	1
7	GA4525112	T SLOT THREADED INSERT, 3 HOLE, M6, STRAIGHT	2
8	GA5004437	WASHER 6mm FLAT SS	2
9	GA5004447	WASHER 6mm SPRING SS	2
10	GA5003643	WASHER 8mm FLAT SS HD	2
11	GA5004919	WASHER 8mm SPRING SS	2
12	GA5055245	WASHER, NOZZLE CAP SEAL, RUBBER, 19 OD X 9 ID, SUIT TEE JET NOZZLE, REPLACES CP19438-EPR	2
GA6101956 GOLDACRES		ASSEMBLY DRAWING ONLY, BILBERRY CAMERA POST CAM05/CAM06	REV 01

Camera Post Assembly, Bilberry, LH, (Camera 11, 48mt)

BUILD OPTION:
65276 - SPECIALISED LIGHTS FOR NIGHT TIME SPOT SPRAYING

NOTE:
SERIES 3 MACHINES - LIGHTS ARE STANDARD

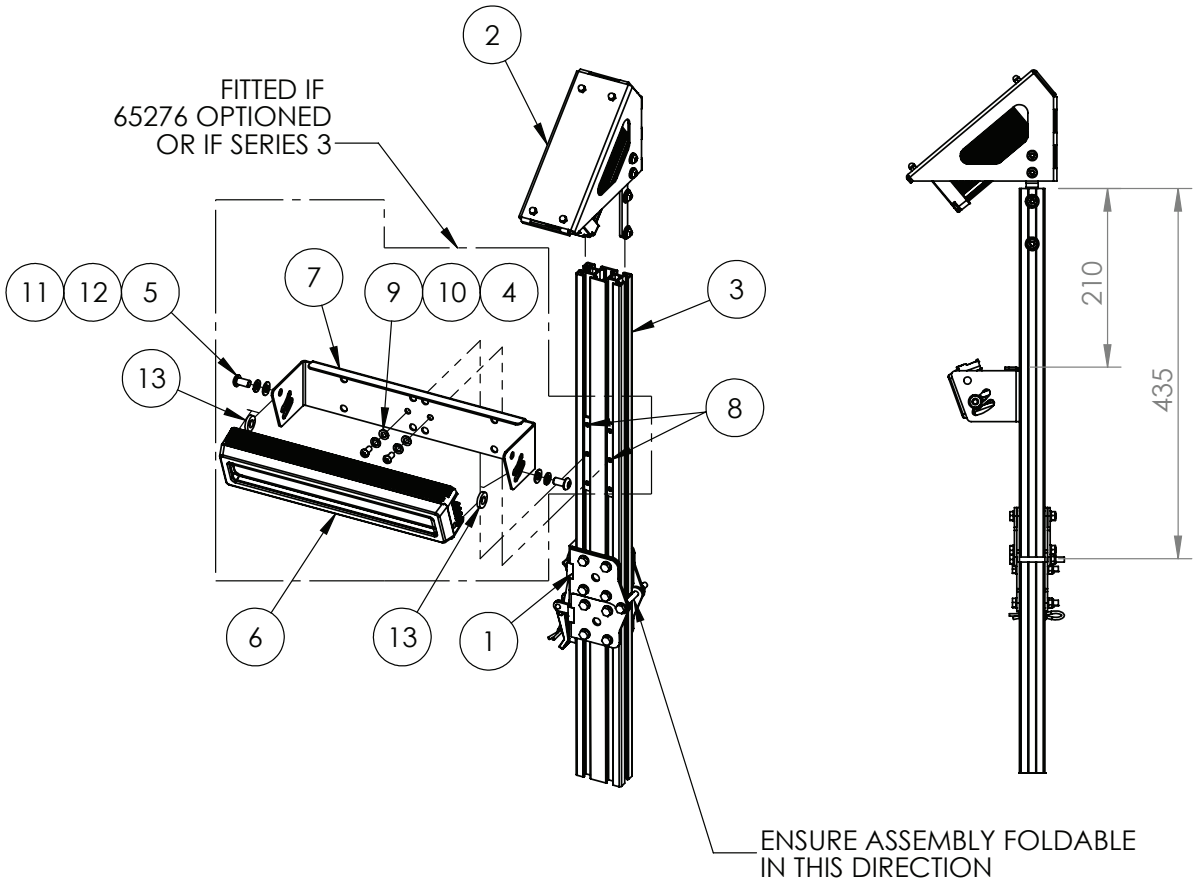

IF DESCRIPTION PREFIX IS ASSEMBLY DRAWING ONLY OR PRODUCTION DRAWING ONLY THE ITEM IS NOT FOR SALE			
ITEM	PART NUMBER	DESCRIPTION	QTY
1	GA4909588	ASSEMBLY DRAWING ONLY, BILBERRY CAM POST LOWER FOLDING ASSEMBLY, 250mm	1
2	GA4912710	ASSEMBLY DRAWING ONLY, BILBERRY CAMERA MOUNT ASSEMBLY	1
3	GA5073810	ALUMINIUM T SLOT EXTRUSION, 30 X 60 X 2mm, RADIUS EDGE, 6063 T5, SS3-84937	1
4	GA5004033	BHCS M6 X 12 SS A2-70	2
5	GA5004696	BHCS M8 X 16 SS A2-70	2
6	GA3000716	LED LIGHT MODULE, 3M SECTION, WEED DETECTION, GEN 3, BILBERRY	1
7	GA4526600	MOUNTING BRACKET SUIT BILBERRY SPOTLIGHT FRONT MOUNT	1
8	GA4525112	T SLOT THREADED INSERT, 3 HOLE, M6, STRAIGHT	2
9	GA5004437	WASHER 6mm FLAT SS	2
10	GA5004447	WASHER 6mm SPRING SS	2
11	GA5003651	WASHER 8mm FLAT SS	2
12	GA5004919	WASHER 8mm SPRING SS	2
13	GA5055245	WASHER, NOZZLE CAP SEAL, RUBBER, 19 OD X 9 ID, SUIT TEE JET NOZZLE, REPLACES CP19438-EPR	2
GA6101957 GOLDACRES		ASSEMBLY DRAWING ONLY, BILBERRY CAMERA POST FOLDING LH CAM07 ASSEMBLY FITTED	REV 02

Camera Post Assembly, Bilberry, RH, (Camera 12, 48mt)

BUILD OPTION:
65276 - SPECIALISED LIGHTS FOR NIGHT TIME SPOT SPRAYING

NOTE:
SERIES 3 MACHINES - LIGHTS ARE STANDARD

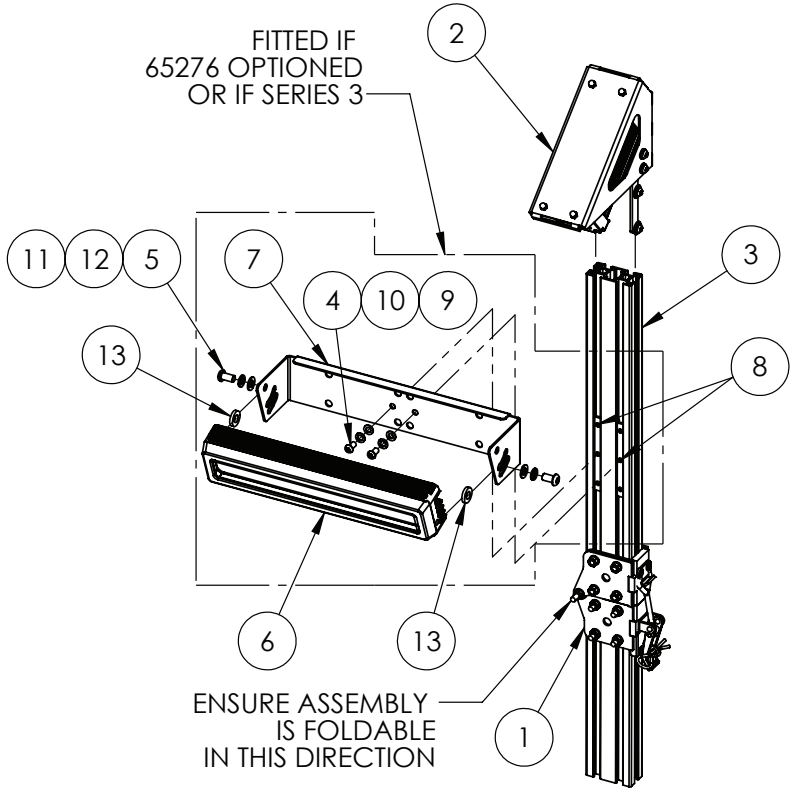

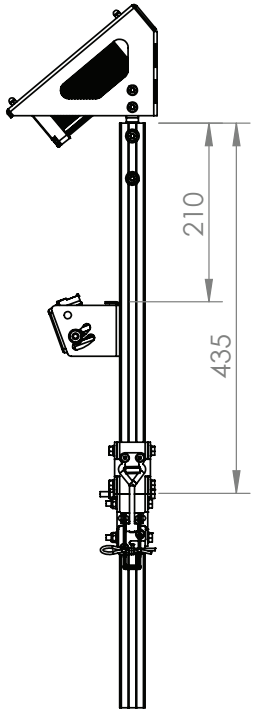

IF DESCRIPTION PREFIX IS ASSEMBLY DRAWING ONLY OR PRODUCTION DRAWING ONLY THE ITEM IS NOT FOR SALE			
ITEM	PART NUMBER	DESCRIPTION	QTY
1	GA4909588	ASSEMBLY DRAWING ONLY, BILBERRY CAM POST LOWER FOLDING ASSEMBLY, 250mm	1
2	GA4912710	ASSEMBLY DRAWING ONLY, BILBERRY CAMERA MOUNT ASSEMBLY	1
3	GA5073810	ALUMINIUM T SLOT EXTRUSION, 30 X 60 X 2mm, RADIUS EDGE, 6063 T5, SS3-84937	1
4	GA5004033	BHCS M6 X 12 SS A2-70	2
5	GA5004696	BHCS M8 X 16 SS A2-70	2
6	GA3000716	LED LIGHT MODULE, 3M SECTION, WEED DETECTION, GEN 3, BILBERRY	1
7	GA4526600	MOUNTING BRACKET SUIT BILBERRY SPOTLIGHT FRONT MOUNT	1
8	GA4525112	T SLOT THREADED INSERT, 3 HOLE, M6, STRAIGHT	2
9	GA5004437	WASHER 6mm FLAT SS	2
10	GA5004447	WASHER 6mm SPRING SS	2
11	GA5003643	WASHER 8mm FLAT SS HD	2
12	GA5004919	WASHER 8mm SPRING SS	2
13	GA5055245	WASHER, NOZZLE CAP SEAL, RUBBER, 19 OD X 9 ID, SUIT TEE JET NOZZLE, REPLACES CP19438-EPR	2
GA6101961 GOLDACRES		ASSEMBLY DRAWING ONLY, BILBERRY CAMERA POST FOLDING RH CAM08 ASSEMBLY FITTED	REV 01

Camera Post Assembly, Bilberry, LH, (Camera 13, 48mt)

BUILD OPTION:
65276 - SPECIALISED LIGHTS FOR NIGHT TIME SPOT SPRAYING

NOTE:
SERIES 3 MACHINES - LIGHTS ARE STANDARD

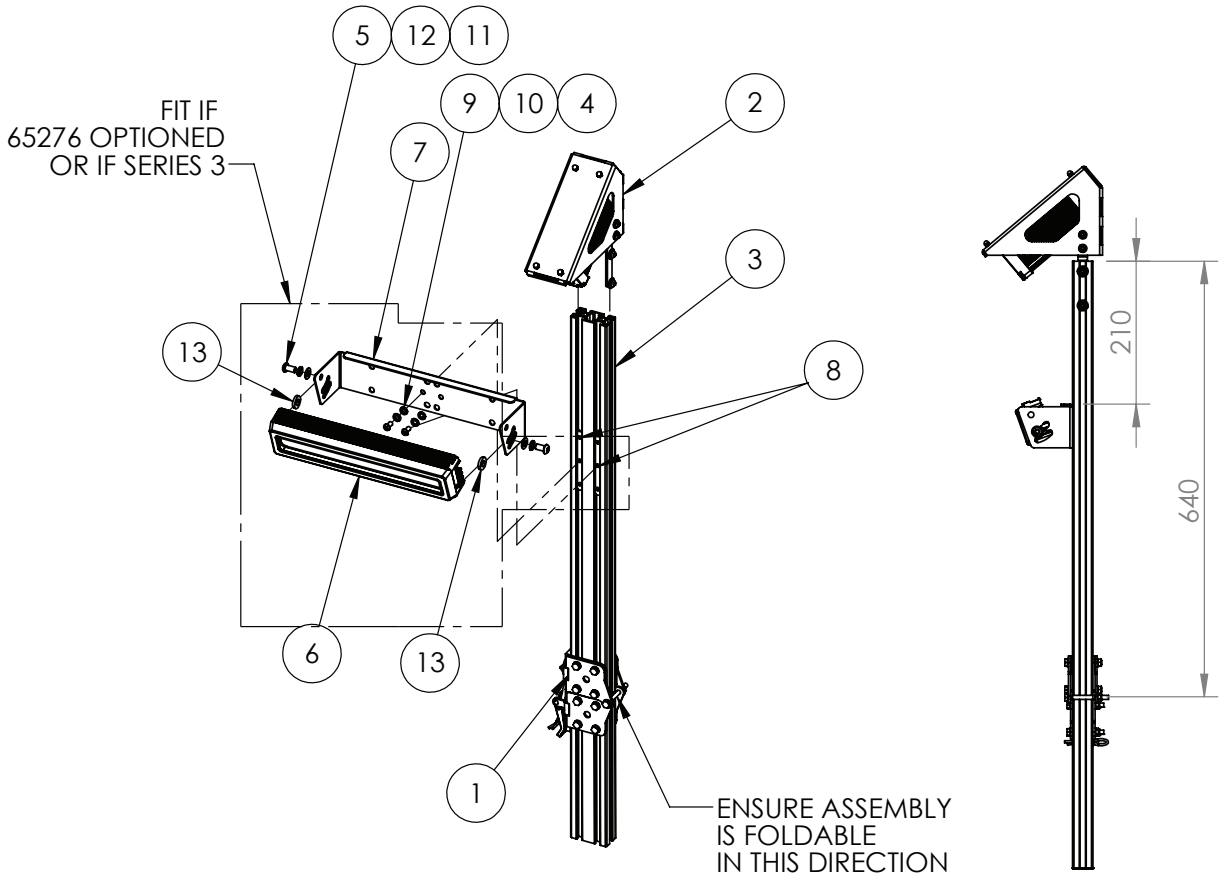

IF DESCRIPTION PREFIX IS ASSEMBLY DRAWING ONLY OR PRODUCTION DRAWING ONLY THE ITEM IS NOT FOR SALE			
ITEM	PART NUMBER	DESCRIPTION	QTY
1	GA4909588	ASSEMBLY DRAWING ONLY, BILBERRY CAM POST LOWER FOLDING ASSEMBLY, 250mm	1
2	GA4912710	ASSEMBLY DRAWING ONLY, BILBERRY CAMERA MOUNT ASSEMBLY	1
3	GA5073810	ALUMINIUM T SLOT EXTRUSION, 30 X 60 X 2mm, 640mm LONG, SUIT CAMERA POST	1
4	GA5004033	BHCS M6 X 12 SS A2-70	2
5	GA5004696	BHCS M8 X 16 SS A2-70	2
6	GA3000716	LED LIGHT MODULE, 3M SECTION, WEED DETECTION, GEN 3, BILBERRY	1
7	GA4526600	MOUNTING BRACKET SUIT BILBERRY SPOTLIGHT FRONT MOUNT	1
8	GA4525112	T SLOT THREADED INSERT, 3 HOLE, M6, STRAIGHT	2
9	GA5004437	WASHER 6mm FLAT SS	2
10	GA5004447	WASHER 6mm SPRING SS	2
11	GA5003651	WASHER 8mm FLAT SS	2
12	GA5004919	WASHER 8mm SPRING SS	2
13	GA5055245	WASHER, NOZZLE CAP SEAL, RUBBER, 19 OD X 9 ID, SUIT TEE JET NOZZLE, REPLACES CP19438-EPR	2
GA6101984 GOLDACRES		ASSEMBLY DRAWING ONLY, BILBERRY FOLDING CAMERA POST, LH CAM13	REV 01

Camera Post Assembly, Bilberry, RH, (Camera 14, 48mt)

BUILD OPTION:
65281 - SPECIALISED LIGHTS FOR NIGHT TIME SPOT SPRAYING

NOTE:
SERIES 3 MACHINES - LIGHTS ARE STANDARD

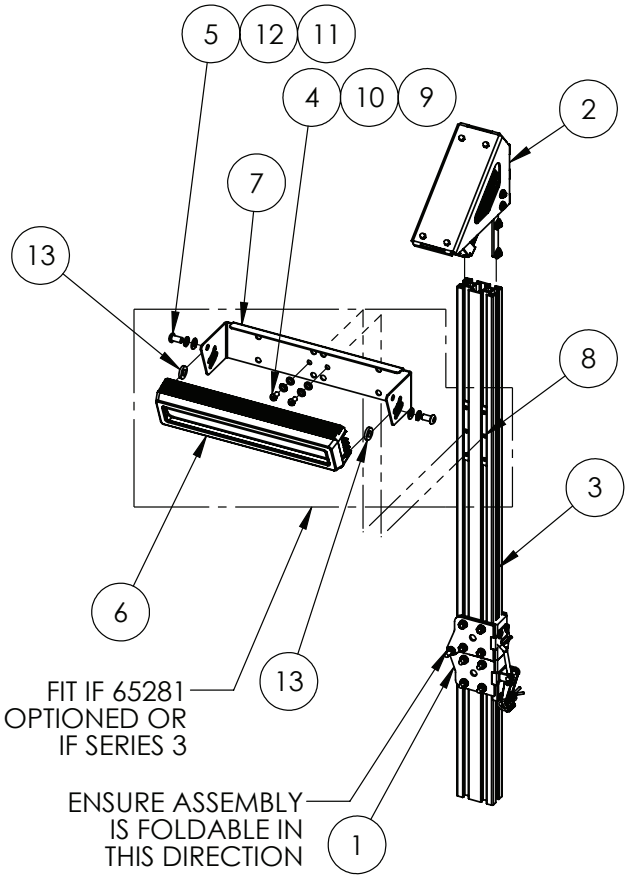

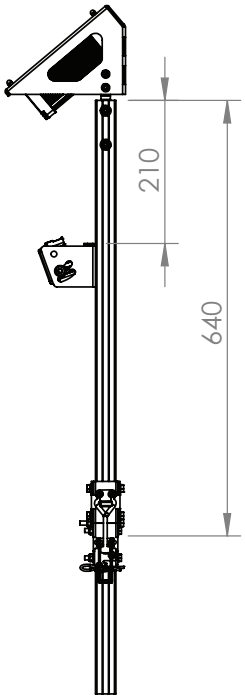

IF DESCRIPTION PREFIX IS ASSEMBLY DRAWING ONLY OR PRODUCTION DRAWING ONLY THE ITEM IS NOT FOR SALE			
ITEM	PART NUMBER	DESCRIPTION	QTY
1	GA4909588	ASSEMBLY DRAWING ONLY, BILBERRY CAM POST LOWER FOLDING ASSEMBLY, 250mm	1
2	GA4912710	ASSEMBLY DRAWING ONLY, BILBERRY CAMERA MOUNT ASSEMBLY	1
3	GA5073810	ALUMINIUM T SLOT EXTRUSION, 30 X 60 X 2mm, 640mm LONG, SUIT CAMERA POST	1
4	GA5004033	BHCS M6 X 12 SS A2-70	2
5	GA5004696	BHCS M8 X 16 SS A2-70	2
6	GA3000716	LED LIGHT MODULE, 3M SECTION, WEED DETECTION, GEN 3, BILBERRY	1
7	GA4526600	MOUNTING BRACKET SUIT BILBERRY SPOTLIGHT FRONT MOUNT	1
8	GA4525112	T SLOT THREADED INSERT, 3 HOLE, M6, STRAIGHT	2
9	GA5004437	WASHER 6mm FLAT SS	2
10	GA5004447	WASHER 6mm SPRING SS	2
11	GA5003651	WASHER 8mm FLAT SS	2
12	GA5004919	WASHER 8mm SPRING SS	2
13	GA5055245	WASHER, NOZZLE CAP SEAL, RUBBER, 19 OD X 9 ID, SUIT TEE JET NOZZLE, REPLACES CP19438-EPR	2
GA6101985 GOLDACRES		ASSEMBLY DRAWING ONLY, BILBERRY FOLDING CAMERA POST, RH CAM14	REV 00

Camera Post Assembly, Bilberry, LH, (Camera 15, 48mt)

BUILD OPTION:
65276 - SPECIALISED LIGHTS FOR NIGHT TIME SPOT SPRAYING

NOTE:
SERIES 3 MACHINES - LIGHTS ARE STANDARD

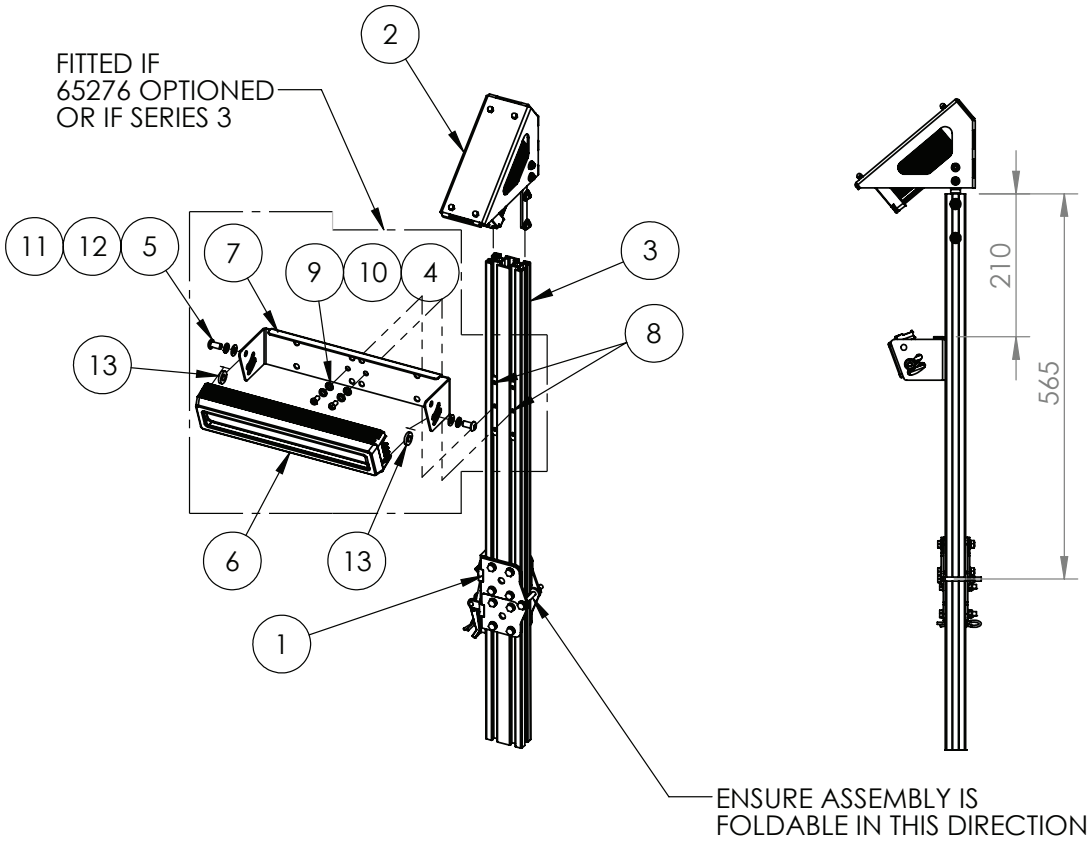

IF DESCRIPTION PREFIX IS ASSEMBLY DRAWING ONLY OR PRODUCTION DRAWING ONLY THE ITEM IS NOT FOR SALE			
ITEM	PART NUMBER	DESCRIPTION	QTY
1	GA4909588	ASSEMBLY DRAWING ONLY, BILBERRY CAM POST LOWER FOLDING ASSEMBLY, 250mm	1
2	GA4912710	ASSEMBLY DRAWING ONLY, BILBERRY CAMERA MOUNT ASSEMBLY	1
3	GA4703101	ALUMINIUM T SLOT EXTRUSION, 30 X 60 X 2mm, RADIUS EDGE, 6063 T5, SS3-84937	1
4	GA5004033	BHCS M6 X 12 SS A2-70	2
5	GA5004696	BHCS M8 X 16 SS A2-70	2
6	GA3000716	LED LIGHT MODULE, 3M SECTION, WEED DETECTION, GEN 3, BILBERRY	1
7	GA4526600	MOUNTING BRACKET SUIT BILBERRY SPOTLIGHT FRONT MOUNT	1
8	GA4525112	T SLOT THREADED INSERT, 3 HOLE, M6, STRAIGHT	2
9	GA5004437	WASHER 6mm FLAT SS	2
10	GA5004447	WASHER 6mm SPRING SS	2
11	GA5003651	WASHER 8mm FLAT SS	2
12	GA5004919	WASHER 8mm SPRING SS	2
13	GA5055245	WASHER, NOZZLE CAP SEAL, RUBBER, 19 OD X 9 ID, SUIT TEE JET NOZZLE, REPLACES CP19438-EPR	2
GA6101958 GOLDACRES		ASSEMBLY DRAWING ONLY, BILBERRY CAMERA POST FOLDING CAM09 LH ASSEMBLY FITTED	REV 01

Camera Post Assembly, Bilberry, RH, (Camera 16, 48mt)

BUILD OPTION:
65276 - SPECIALISED LIGHTS FOR NIGHT TIME SPOT SPRAYING

NOTE:
SERIES 3 MACHINES - LIGHTS ARE STANDARD

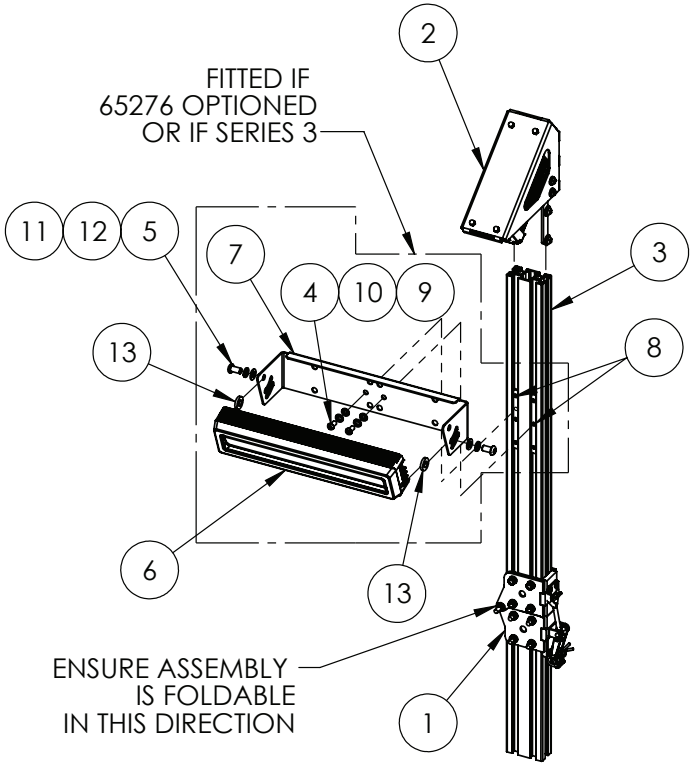

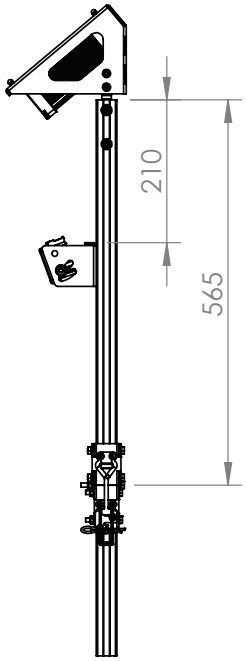

IF DESCRIPTION PREFIX IS ASSEMBLY DRAWING ONLY OR PRODUCTION DRAWING ONLY THE ITEM IS NOT FOR SALE			
ITEM	PART NUMBER	DESCRIPTION	QTY
1	GA4909588	ASSEMBLY DRAWING ONLY, BILBERRY CAM POST LOWER FOLDING ASSEMBLY, 250mm	1
2	GA4912710	ASSEMBLY DRAWING ONLY, BILBERRY CAMERA MOUNT ASSEMBLY	1
3	GA4703101	ALUMINIUM T SLOT EXTRUSION, 30 X 60 X 2mm, RADIUS EDGE, 6063 T5, SS3-84937	1
4	GA5004033	BHCS M6 X 12 SS A2-70	2
5	GA5004696	BHCS M8 X 16 SS A2-70	2
6	GA3000716	LED LIGHT MODULE, 3M SECTION, WEED DETECTION, GEN 3, BILBERRY	1
7	GA4526600	MOUNTING BRACKET SUIT BILBERRY SPOTLIGHT FRONT MOUNT	1
8	GA4525112	T SLOT THREADED INSERT, 3 HOLE, M6, STRAIGHT	2
9	GA5004437	WASHER 6mm FLAT SS	2
10	GA5004447	WASHER 6mm SPRING SS	2
11	GA5003643	WASHER 8mm FLAT SS HD	2
12	GA5004919	WASHER 8mm SPRING SS	2
13	GA5055245	WASHER, NOZZLE CAP SEAL, RUBBER, 19 OD X 9 ID, SUIT TEE JET NOZZLE, REPLACES CP19438-EPR	2
GA6101962 GOLDACRES		ASSEMBLY DRAWING ONLY, BILBERRY CAMERA POST FOLDING RH CAM10 ASSEMBLY FITTED	REV 01

Mounting Plate, Bilberry CALC Module

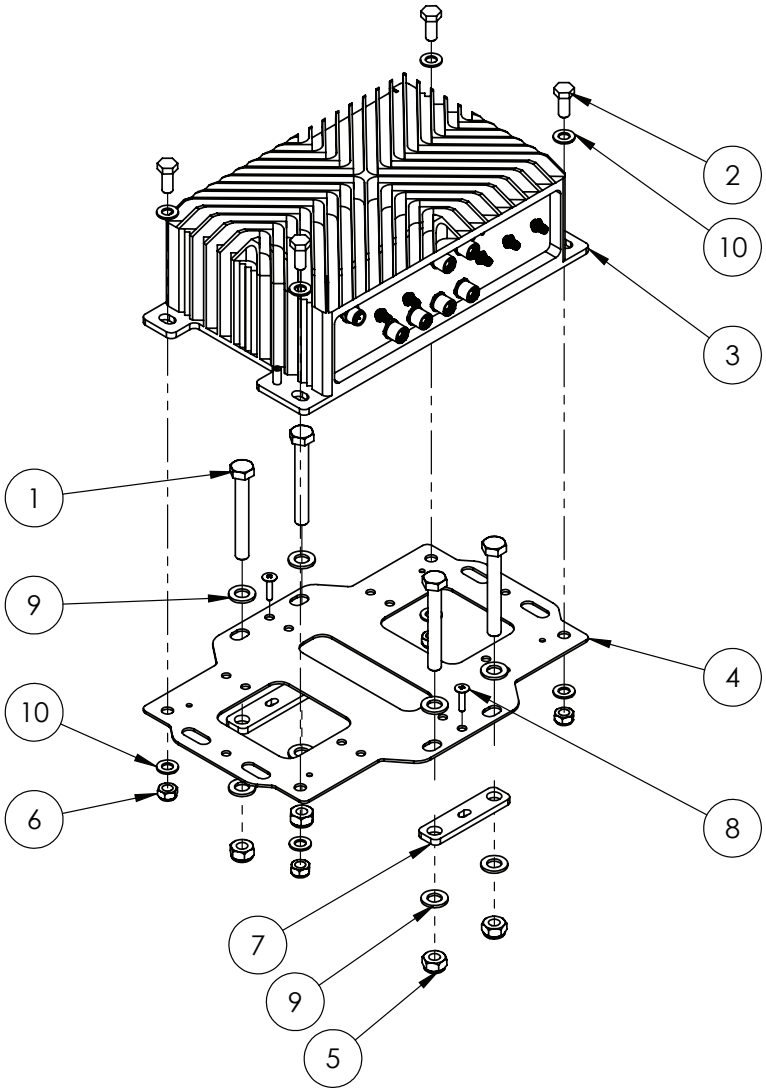

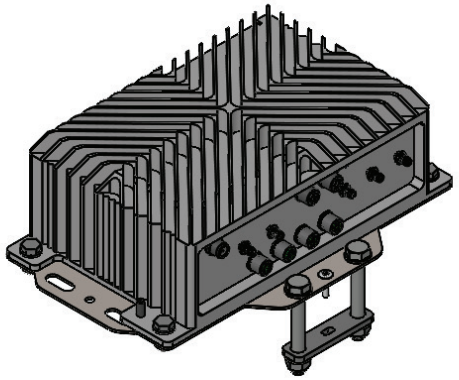

IF DESCRIPTION PREFIX IS ASSEMBLY DRAWING ONLY OR PRODUCTION DRAWING ONLY THE ITEM IS NOT FOR SALE			
ITEM	PART NUMBER	DESCRIPTION	QTY
1	GA5006073	BOLT M10 X 75 GR8.8 ZP	4
2	GA5004085	BOLT M8 X 20 GR8.8 ZP	4
3	GA3001061	CALC MODULE, RUGGED COMPUTER, AI EDGE, SYSLOGIC XAVIER, POE RML, IP67, NUMBER 1, BILBERRY, COM-AG-SYS-XAV2	1
4	GA4525065	MOUNTING PLATE, SWITCH MODULE GEN 2, CALC MODULE GEN 4, BILBERRY	1
5	GA5000141	NUT M10 NYLOC ZP	4
6	GA5052590	NUT M8 NYLOC SS	4
7	GA4000775	PLATE, MOUNTING PLATE, BILBERRY MODULE WING MOUNT	2
8	GA0500055	SCREW, SELF DRILLING, SELF TAPPING, 8G X 20mm, LARGE WAFER HEAD, PHILIPS, ZP	2
9	GA5000117	WASHER 10mm FLAT SS HD	8
10	GA5003643	WASHER 8mm FLAT SS HD	8
GA4912820 GOLDACRES		BILBERRY CALC MODULE MOUNT GEN 3 ASSEMBLY DRAWING ONLY, BILBERRY CALC MODULE MOUNT GEN 3	REV 01

Post Length Chart, Bilberry

NOTE:
THE BOTTOM OF THE FOLDING BRACKETS ARE TO SIT 10mm MINIMUM ABOVE THE BOOM MOUNTS
THE LIGHT DIMENSION IS TAKEN FROM THE TOP OF THE ALLOY
CAMERA HEIGHT IS 1200mm FROM NOZZLE TIP AND FRONT CAMERAS ARE 1900mm FROM THE GROUND

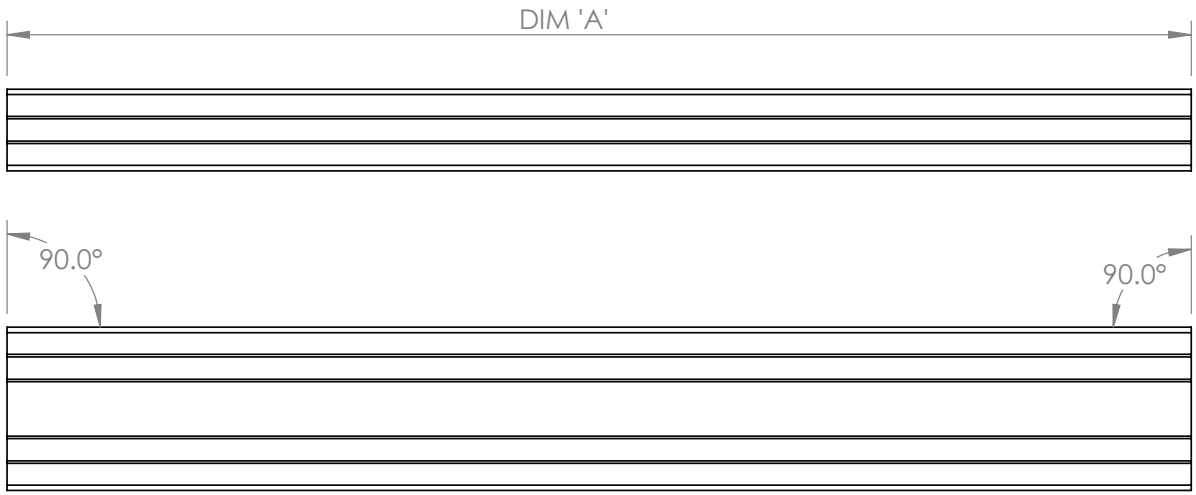

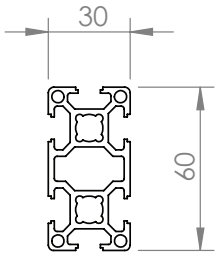

BILBERRY ALLOY LENGTHS

PART NO.	CAMERA POSTS	**S3 36M**	QTY	LIGHTS	BRKTS
GA4909661	1 AND 2	270	X2	210	
GA6101955	3 AND 4	435	X2	210	
GA6101956	5 AND 6	565	X2	210	
GA6101957 GA6101961	7 AND 8	435 + 250	X1 LH X1 RH	210	FOLDING
GA6101958 GA6101962	9 AND 10	565 + 250	X1 LH X1 RH	210	FOLDING
GA6101959 GA6101960	11 AND 12	435 + 250	X1 LH X1 RH	210	FOLDING
	13 AND 14				
	15 AND 16				
	LINEAR METRES TOTAL	7.8m			

PART NO.	CAMERA POSTS	**S3 42M**	QTY	LIGHTS	BRKTS
GA4909661	1 AND 2	270	X2	210	
GA6101955	3 AND 4	435	X2	210	
GA6101956	5 AND 6	565	X2	210	
GA6101957	7 AND 8	640	x2	210	
GA6101958 GA6101962	9 AND 10	500 + 250	X1 LH X1 RH	210	FOLDING
GA6101959 GA6101960	11 AND 12	435 + 250	X1 LH X1 RH	210	FOLDING
GA6101984 GA6101985	13 AND 14	640 + 250	X1 LH X1 RH	210	FOLDING
	15 AND 16				
	LINEAR METRES TOTAL	9.4m			

PART NO.	CAMERA POSTS	**S3 48M**	QTY	LIGHTS	BRKTS
GA4909661	1 AND 2	270	X2	210	
GA6101955	3 AND 4	435	X2	250	
GA6101955	5 AND 6	435	X2	160	
GA6101955	7 AND 8	435	x2	210	
GA6101956	9 AND 10	565	x2	210	
GA6101957 GA6101961	11 AND 12	435 + 250	X1 LH X1 RH	210	FOLDING
GA6101984 GA6101985	13 AND 14	640 + 250	X1 LH X1 RH	210	FOLDING
GA6101958 GA6101962	15 AND 16	565 + 250	X1 LH X1 RH	210	FOLDING
	LINEAR METRES TOTAL	10.2m			

GA5026727 GOLDACRES	ALUMINIUM T SLOT EXTRUSION, 30 X 60 X 2mm, RADIUS EDGE, 6063 T5, SS3-84937	REV 00

22 - Height Control

Height Sensor & Boom Control Module, Centre Section

FIT ITEMS ON THIS SHEET ONLY
IF RAVEN XRT 30074 OR 30075 OPTIONED

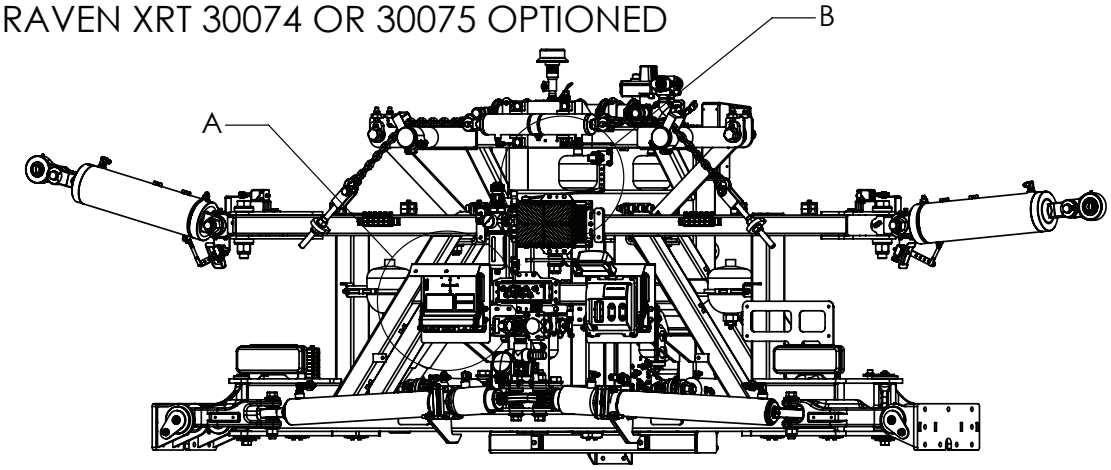

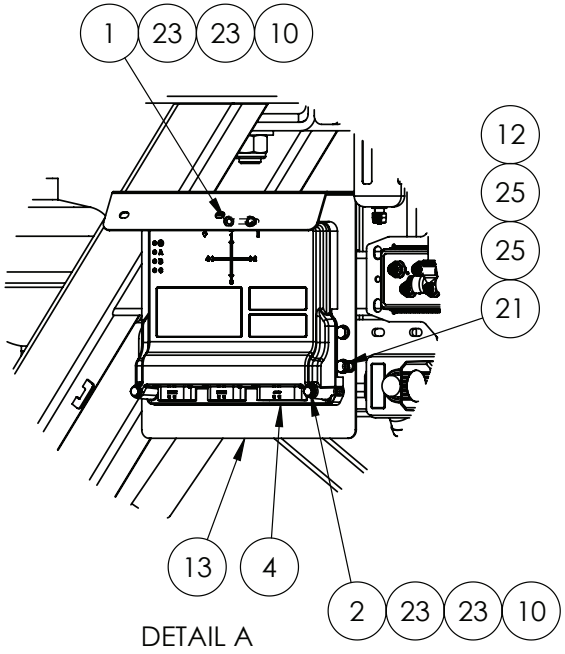

DETAIL A

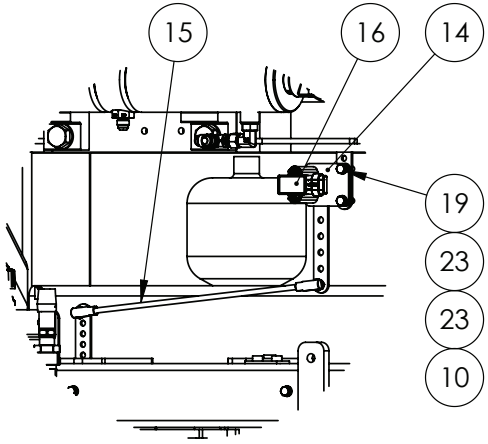

DETAIL B

IF DESCRIPTION PREFIX IS ASSEMBLY DRAWING ONLY OR PRODUCTION DRAWING ONLY THE ITEM IS NOT FOR SALE			
ITEM	PART NUMBER	DESCRIPTION	QTY
1	GA5050175	BOLT M6 X 65 GR8.8 ZP	1
2	GA5011439	BOLT M6 X 80 GR8.8 ZP	2
4	GA3000371	ECU, ISOBUS, RAVEN EXPANSION MODULE, REM, XRT 063-0173-965	1
10	GA5048115	NUT M6 NYLOC ZP	5
12	GA5004917	NUT M8 NYLOC ZP	4
13	GA4404570	PLATE, MOUNT, RCM NODE	1
14	GA4406430	PLATE, MOUNT, RAVEN SLANT ANGLE SENSOR	1
15	GA4551340	ROD, THREADED M6, 300mm LONG, SUIT ROLL ANGLE SENSOR XRT	1
16	GA3000378	ROTARY SENSOR KIT, WITH LOOSE HARDWARE, RTP, 50 DEGREE, RAVEN XRT, 11170235009	1
19	GA5004073	SET SCREW M6 X 25 GR8.8 ZP	6
21	GA5004711	SET SCREW M8 X 25 GR8.8 ZP	5
23	GA5004437	WASHER M6 FLAT SS HD	16
25	GA5003643	WASHER M8 FLAT SS HD	8
GA6101940-13 GOLDACRES		ASSEMBLY DRAWING ONLY, CENTRE AND PARALIFT REAR, LF SP S3, MY25	REV 00

Raven XRT, Expansion Module & Centre Section Rotary Sensor Mounting

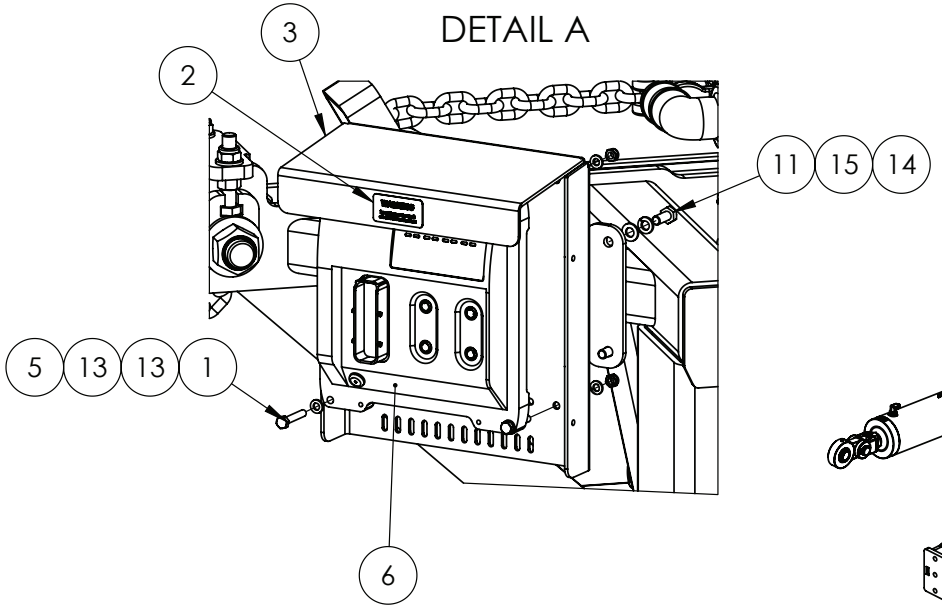

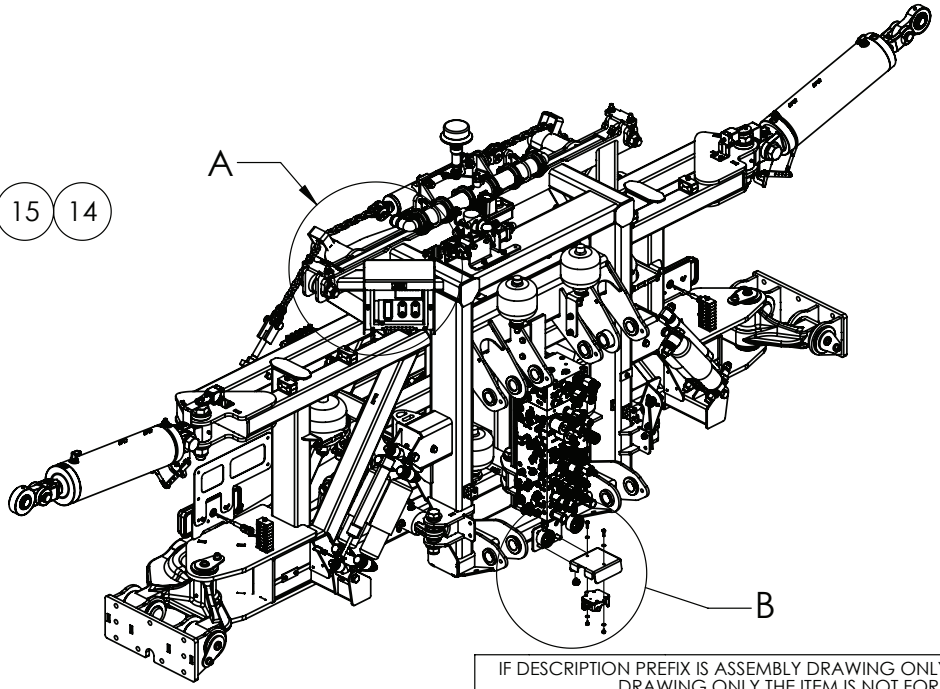

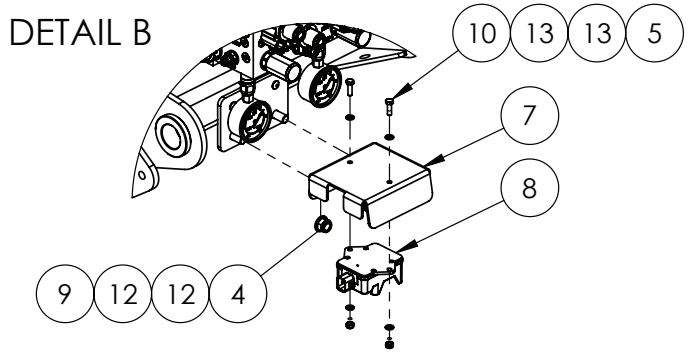

FIT DETAIL B IF RAVEN XRT 30074 OR 30075 OPTIONED

IF DESCRIPTION PREFIX IS ASSEMBLY DRAWING ONLY OR PRODUCTION DRAWING ONLY THE ITEM IS NOT FOR SALE			
ITEM	PART NUMBER	DESCRIPTION	QTY
1	GA5011405	BOLT M6 X 35 GR8.8 ZP	4
2	GA8701275	DECAL, WARNING - DO NOT PRESSURE WASH ELECTRICAL CONNECTIONS	1
3	GA4605118	FABRICATION, PLC MOUNT, PARALIFT REAR MY25	1
4	GA5012461	NUT M12 NYLOC ZP	2
5	GA5048115	NUT M6 NYLOC ZP	6
6	GA3001171	PLC, G6/G8 S3 BOOM CONTROLLER MY25, CR0709, IFM	1
7	GA4406545	PLATE, RADAR SENSOR BRACKET, RAVEN XRT, CENTRE SECTION, TRITECH MY20	1
8	GA3000382	SENSOR, RAVEN XRT BOOM HEIGHT RADAR, 063-0173-962	1
9	GA5000305	SET SCREW M12 X 30 GR8.8 ZP	2
10	GA5004065	SET SCREW M6 X 20 GR8.8 ZP	2
11	GA5004085	SET SCREW M8 X 20 GR8.8 ZP	4
12	GA5000577	WASHER M12 FLAT SS HD	4
13	GA5004437	WASHER M6 FLAT SS HD	12
14	GA5003643	WASHER M8 FLAT SS HD	4
15	GA5004919	WASHER M8 SPRING SS	4
GA6101940-14 GOLDACRES		ASSEMBLY DRAWING ONLY, CENTRE AND PARALIFT REAR, LF SP S3, MY25	REV 00.A

Raven XRT Boom Sensor Assembly

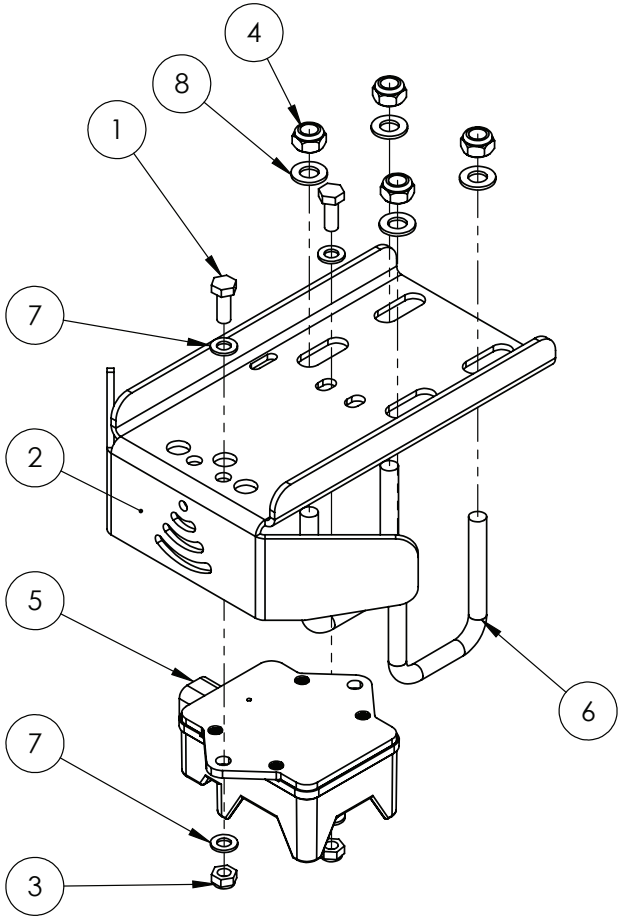

IF DESCRIPTION PREFIX IS ASSEMBLY DRAWING ONLY OR PRODUCTION DRAWING ONLY THE ITEM IS NOT FOR SALE			
ITEM	PART NUMBER	DESCRIPTION	QTY
1	GA5011395	BOLT M6 X 16 SS A2-70	2
2	GA4411280	BRACKET, RAVEN XRT RADAR SENSOR / LIGHT MOUNT, BOOM, WITH FRONT SHIELD	1
3	GA5004429	NUT M6 NYLOC SS	2
4	GA5052590	NUT M8 NYLOC SS	4
5	GA3000382	SENSOR, RAVEN XRT BOOM HEIGHT RADAR, 063-0173-962	1
6	GA0500084	U BOLT SQUARE TOP M8 X 65 X 42, 304 SS	2
7	GA5004437	WASHER 6mm FLAT SS	4
8	GA5003643	WASHER 8mm FLAT SS HD	4
GA4912625 GOLDACRES		ASSEMBLY DRAWING ONLY, BRACKET, SENSOR, RAVEN XRT 107-0235-001	REV 01

23 - Schematics

Hydraulic Schematic, Front Mount tank

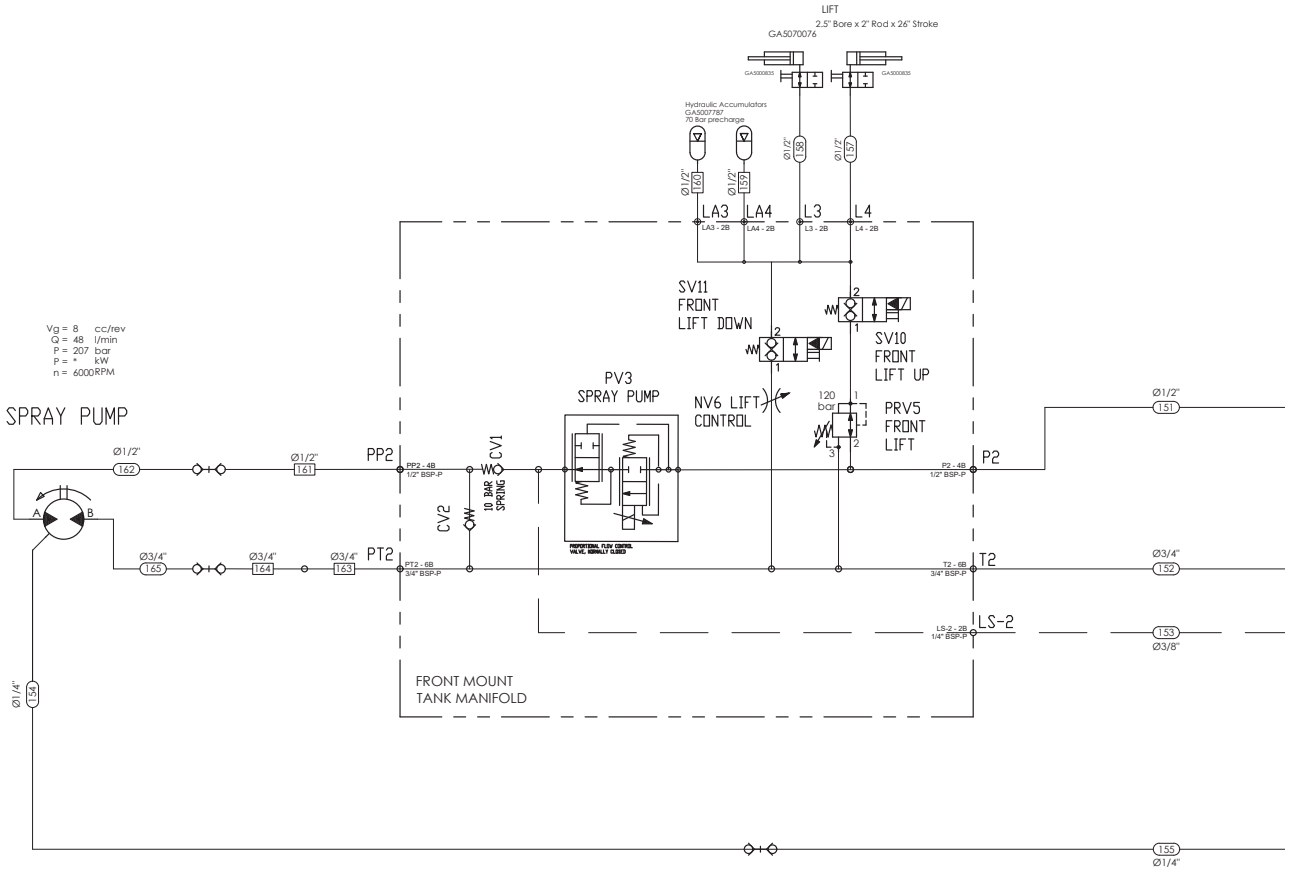

GA7800200 GOLDACRES	SCHEMATICS, HYDRAULIC, LARGE FRAME SP, SERIES 3, MY25, FRONT MOUNT TANK	REV 00

Hydraulic Schematic, Chassis

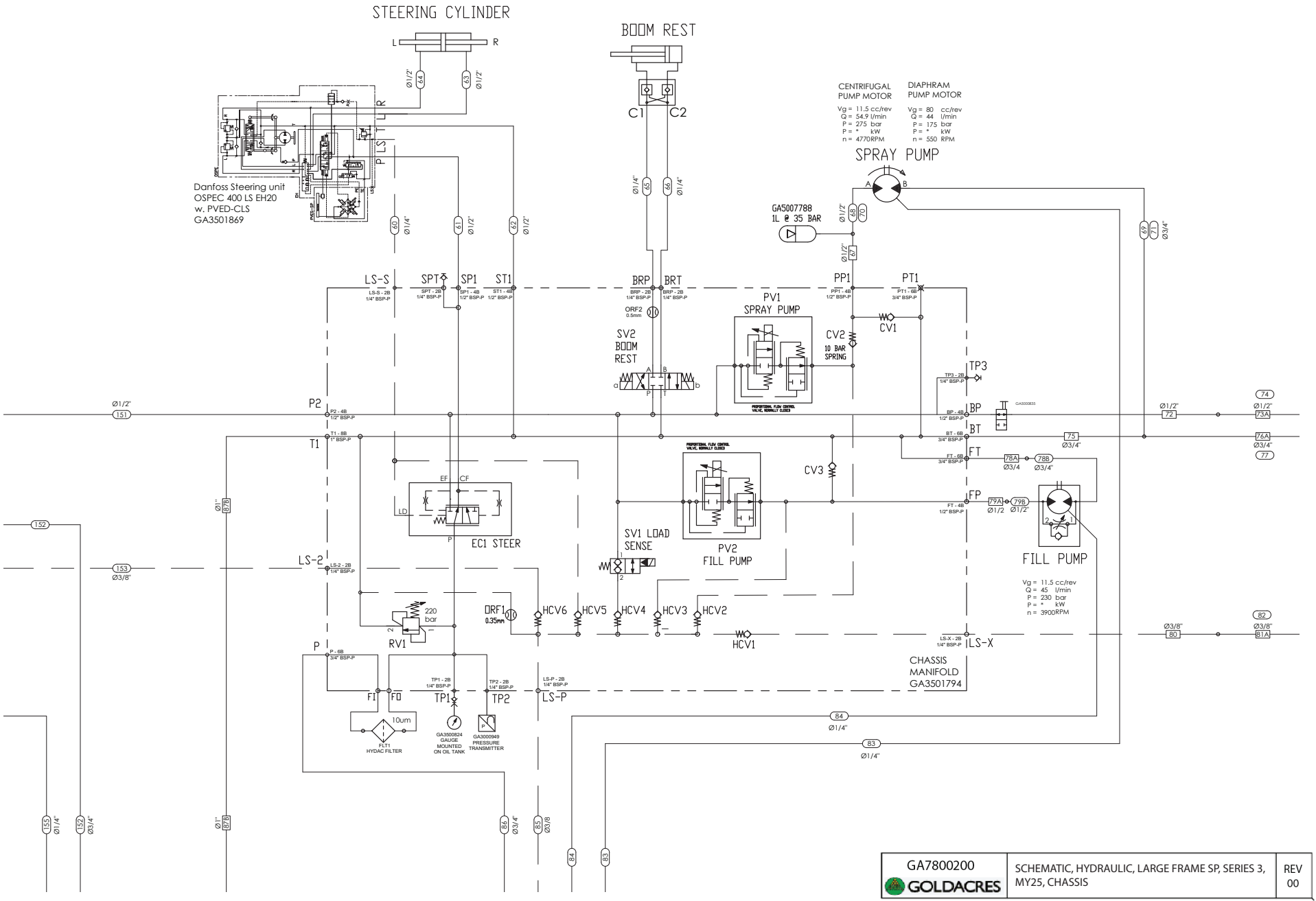

GA7800200	SCHEMATIC, HYDRAULIC, LARGE FRAME SP, SERIES 3, MY25, CHASSIS	REV 00

Hydraulic Schematic, Engine, Pumps, Cooler & Tank

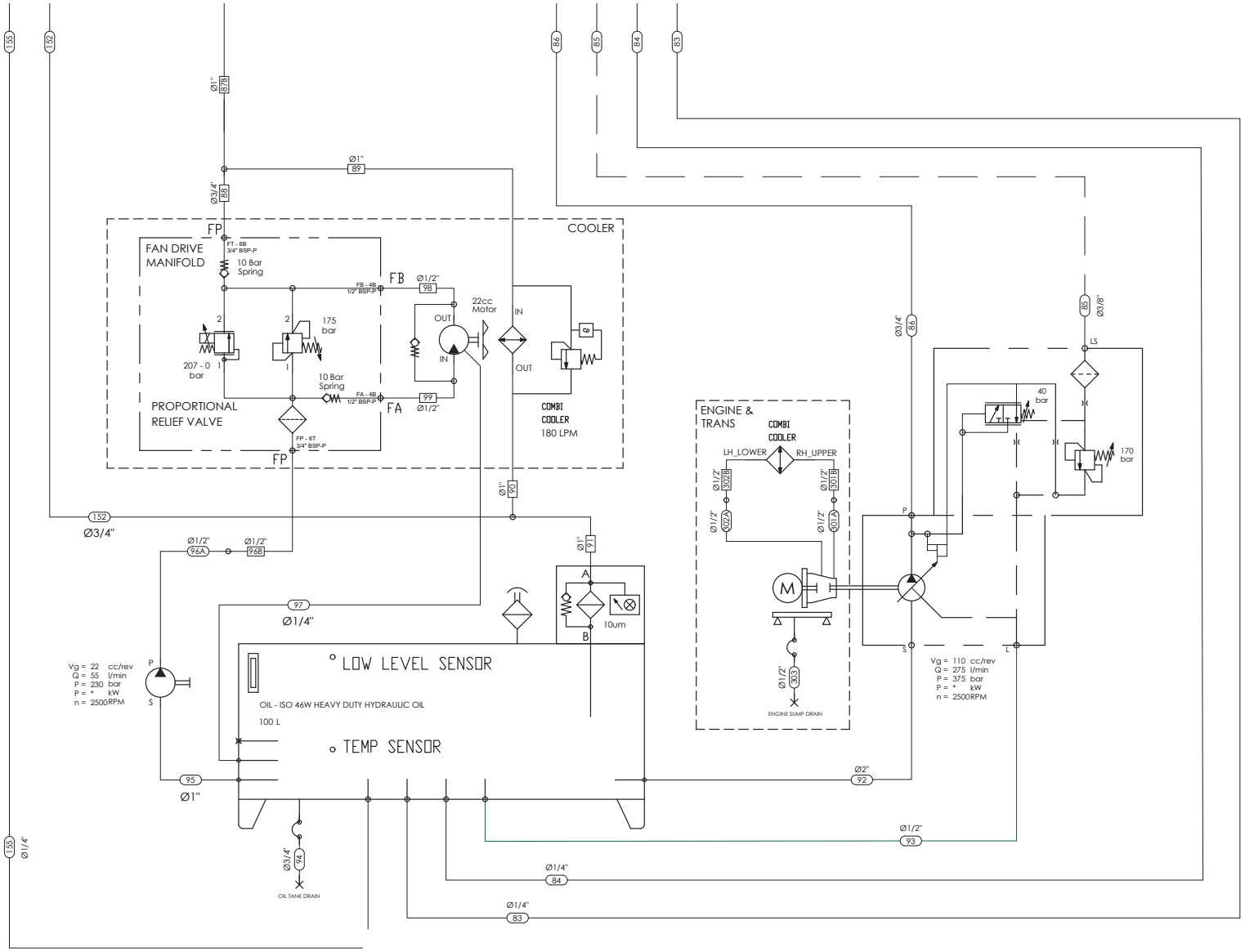

GA7800200 GOLDACRES	SCHEMATIC, HYDRAULIC, LARGE FRAME SP, SERIES 3, MY 25, ENGINE, PUMPS, COOLER & TANK	REV 00

Hydraulic Schematic, Boom

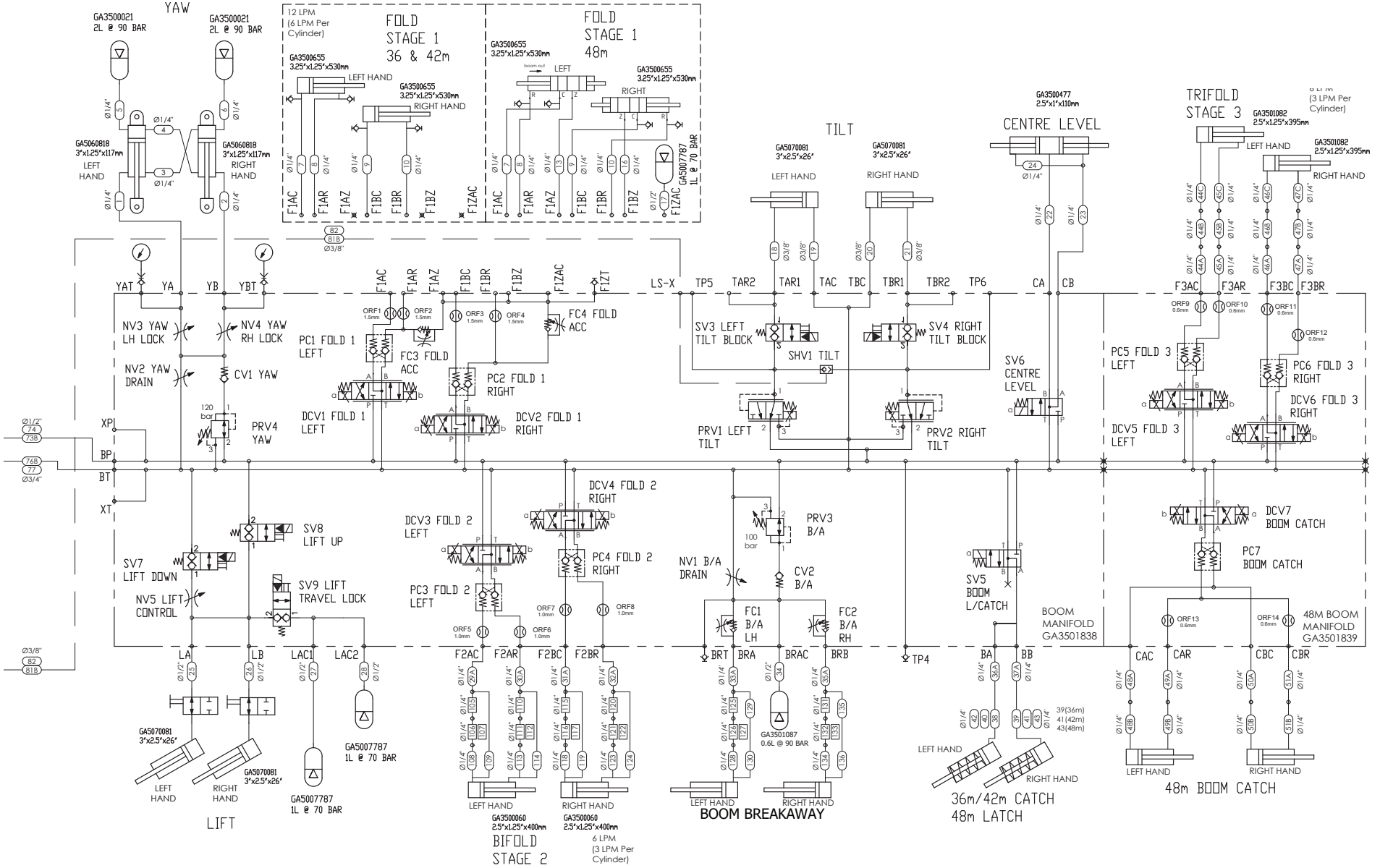

GA7800200	SCHEMATIC, HYDRAULIC, LARGE FRAME SP, SERIES 3, MY 25, BOOM	REV 00
GOLDACRES		

Plumbing Schematic, Tank, Front 3pl

FRONT 3PL - OPTION 80110

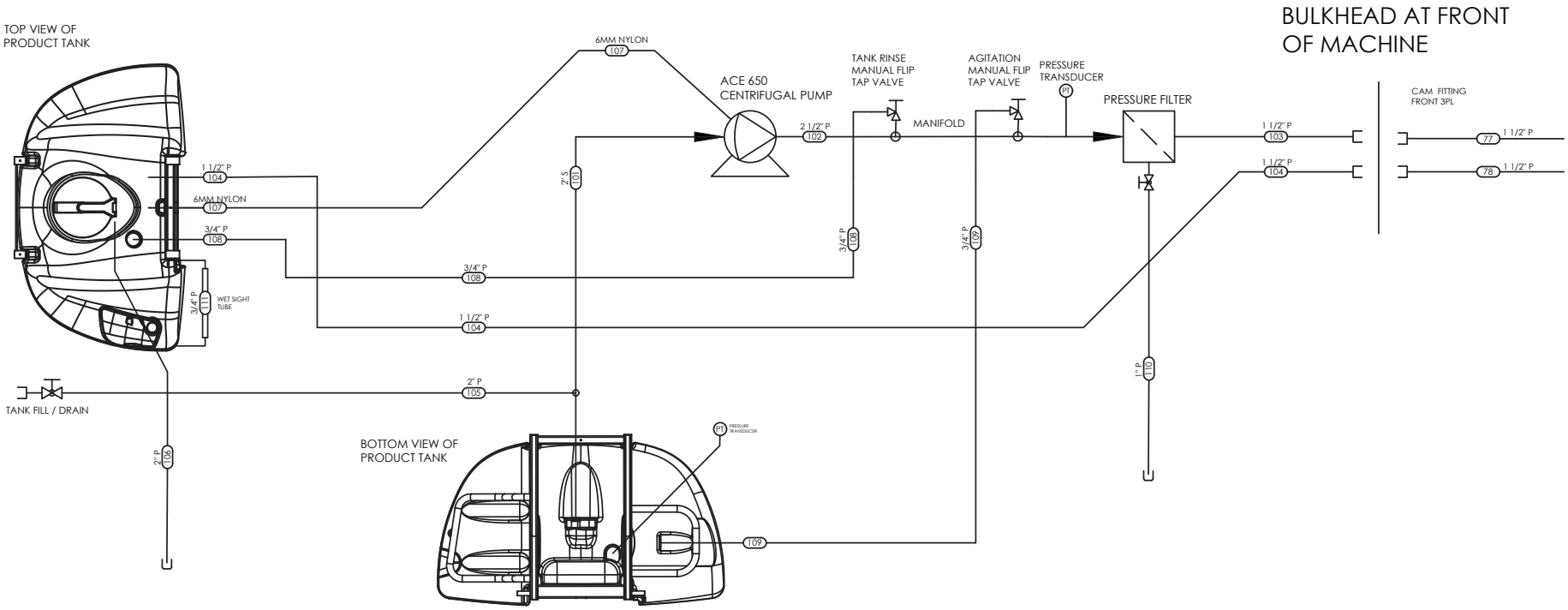

GA7500201 GOLDACRES	Schematic, Plumbing, Large Frame SP, Series 3, MY25	REV 00

Plumbing Schematic, Mains, Chassis

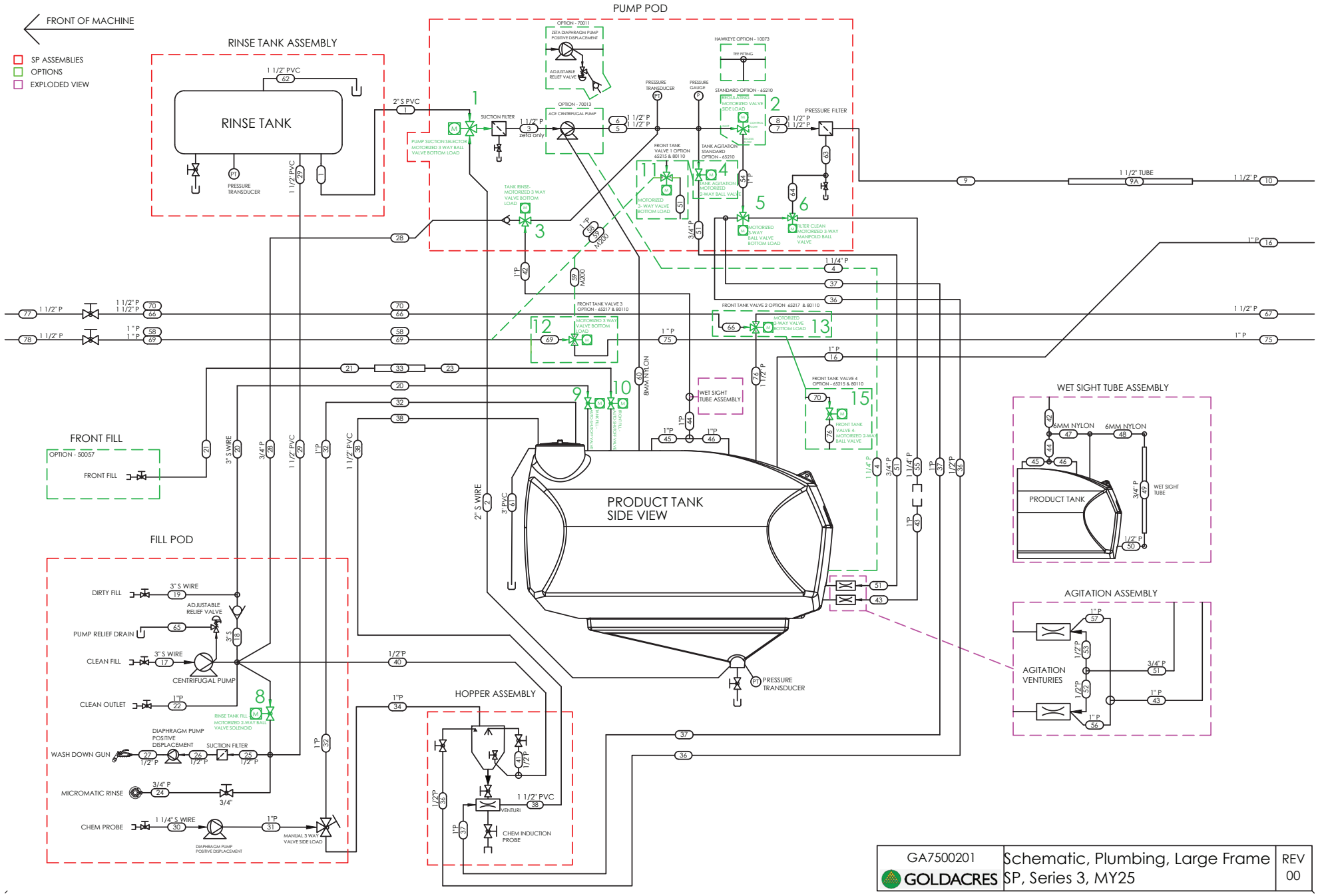

GA7500201	Schematic, Plumbing, Large Frame	REV
GOLDACRES	SP, Series 3, MY25	00

Plumbing Schematic, Chassis to Boom

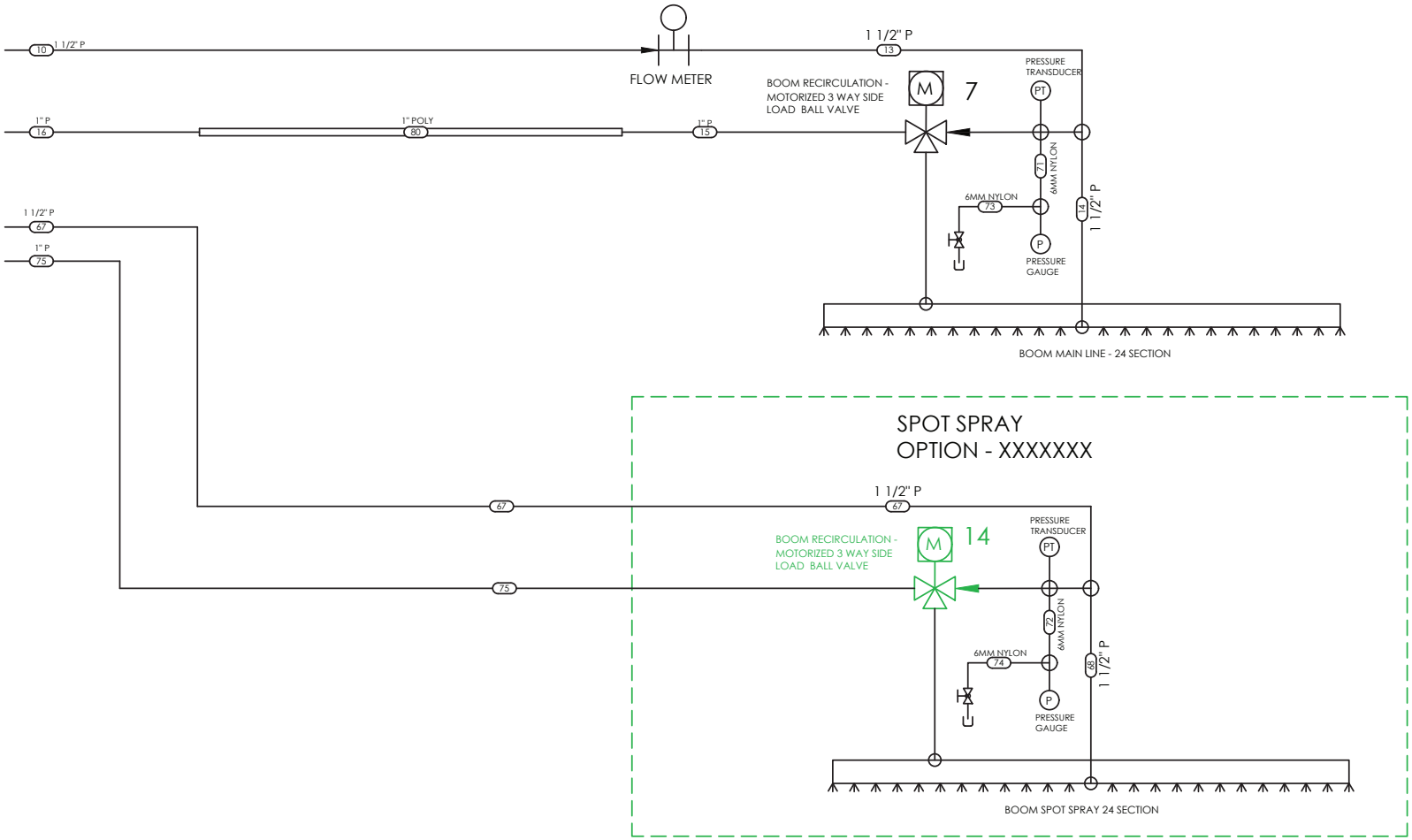

GA7500201	Schematic, Plumbing, Large Frame	REV
GOLDACRES	SP, Series 3, MY25	00

Plumbing Schematic, Hose List

HOSE #	TYPE	DESCRIPTION	LENGTH	WHERE CUT
1	2" S WIRE	RINSE TANK TO SUCTION FILTER 3-WAY 2" ELECTRIC BALL VALVE 1	950	
2	2" S WIRE	PRODUCT TANK TO SUCTION FILTER 3-WAY ELECTRIC BALL VALVE 1	250	
3	1 1/2" P	(OPTION 70011 ZETA) SUCTION TANK TO SPRAY PUMP		
4	1 1/4" P	(OPTION 70011 ZETA) PRESSURE RELIEF VALVE TO PRODUCT TANK		
5	1 1/2" P	(OPTION 70011) ZETA SPRAY PUMP TO CONTROL VALVE ASSEMBLY		
6	1 1/2" P	(OPTION 70013) ACE SPRAY PUMP TO CONTROL VALVE ASSEMBLY		
7	1 1/2" P	(OPTION 70011) ZETA CONTROL VALVE ASSEMBLY TO PRESSURE FILTER		
8	1 1/2" P	(OPTION 70013) ACE CONTROL VALVE ASSEMBLY TO PRESSURE FILTER		
9	1 1/2" P	FROM PRESSURE FILTER TO 1 1/2" TUBE	1000	
9A	1 1/2" P	1 1/2" TUBE (CHASSIS) TO BOOM		
10	1 1/2" P	FROM 1 1/2" TUBE TO BOOM FLOW METER	3500	
11				
12				
13	1 1/2" P	FLOW METER TO BOOM	1180	
14	1 1/2" P	BOOM TEE TO BOOM PLUMBING		
15	1" P	BOOM RECIRCULATION 3-WAY ELECTRONIC BALL VALVE 7 TO BOOM RECIRCULATION PIPE	3200	
16	1" P	BOOM RECIRCULATION PIPE TO PRODUCT TANK	2700	
17	3" S WIRE	CLEAN FILL 3' BALL VALVE TO FILL PUMP ASSEMBLY	310	
18	3" S WIRE	FILL PUMP ASSEMBLY TO FILL MANIFOLD	420	
19	3" S WIRE	DIRTY FILL 3' BALL VALVE TO FILL PUMP ASSEMBLY	1000	
20	3" P	FILL MANIFOLD TO TANK FILL 2-WAY 3" ELECTRIC BALL VALVE 9 (MAIN TANK)	1070	
21	3" S WIRE	(OPTION 50057) FRONT FILL VALVE TO FRONT TANK FILL PIPE		
22	1" P	FILL PUMP TO AUXILLARY OUTLET BALL VALVE	700	
23	3" P	(OPTION 50057) FRONT TANK FILL PIPE TO 2-WAY 3" ELECTRIC BALL VALVE 10 (MAIN TANK)		
24	3/4" P	MICROMATIC RINSE SOCKET TO BALL VALVE ON FILL PUMP TEE	800	
25	1/2" P	FILL PUMP MANIFOLD TO WASH DOWN GUN PUMP FILTER	1200	
26	1/2" P	WASH DOWN GUN PUMP FILTER TO WASHDOWN GUN PUMP		
27	1/2" P	WASHDOWN GUN PUMP TO WASHDOWN GUN	4000	
28	3/4' P	FILL PUMP MANIFOLD TO TANK RINSE 3-WAY VALVE	2800	
29	1 1/2" PVC	FILL PUMP MANIFOLD TO RINSE TANK	2400	
30	1 1/4" S WIRE	CHEMICAL PROBE CAMLOCK VALVE TO CHEMICAL PUMP		
31	1" P	CHEMICAL PUMP TO 3 WAY BALL VALVE		
32	1" P	3 WAY BALL VALVE TO PRODUCT TANK	3750	
33	3" PIPE	(OPTION 50057) FRONT FILL PIPE 3"	-	
34	1" P	3 WAY BALL VALVE TO HOPPER	3300	
35				
36	1/2" P	HOPPER/BYPASS VALVE MANIFOLD TO HOPPER MIXING JET BALL VALVE	4100	
37	1" P	HOPPER/BYPASS VALVE MANIFOLD TO HOPPER VENTURI	4000	
38	1 1/2" PVC	HOPPER VENTURI OUTLET TO PRODUCT TANK	6000	
39				
40	1/2" P	FILL PUMP MANIFOLD TO HOPPER DRUM RINSE TEE	3000	
41	1/2" P	HOPPER DRUM RINSE TEE TO HOPPER RINSE NOZZLE	850	
42	1" P	TANK RINSE 3-WAY VALVE TO WET SIGHT TUBE TEE	4200	
43	1" P	AGITATOR UNION JOINER TO AGITATOR TEE	500	TANKS
44	1" P	WET SIGHT TUBE TEE TO TANK RINSE TEE		TANKS
45	1" P	TANK RINSE TEE TO NOZZLE A		TANKS
46	1" P	TANK RINSE TEE TO NOZZLE B		TANKS
47	6MM NYLON	WET SIGHT TUBE TEE TO 6MM TEE	420	TANKS
48	6MM NYLON	6MM TEE TO WET SIGHT TUBE JOINER	680	LIGHT SUB
49	3/4" P	WET SIGHT TUBE		

(X) HOSE LIST
DO NOT CUT ANY HOSES MARKED WITH

HOSE #	TYPE	DESCRIPTION	LENGTH	WHERE CUT
50	1/2" P	PRODUCT TANK TO WET SIGHT TUBE	3200	STG 3
51	3/4" P	AGITATOR BALL VALVE TO AGITATOR JETS	1700	STG 3
52	1/2" P	AGITATION JET TEE TO AGITATION JET A		TANKS
53	1/2" P	AGITATION JET TEE TO AGITATION JET B		TANKS
54	1" P	REGULATING 3-WAY ELECTRONIC VALVE 2 TO HOPPER/BYPASS 3-WAY ELECTONIC VALVE 5		LIGHT SUB
55	1 1/4 " P	HOPPER BYPASS MANIFOLD 3-WAY ELECTRONIC BALL VALVE 6 TO AGITATOR TEE JOINER	1200	STG 3
56	1" P	AGITATOR TEE TO AGITATOR A		TANKS
57	1" P	AGITATOR TEE TO AGITATOR B		TANKS
58	1" P	(OPTION 65215) FRONT TANK VALVE TO ELECRRINIC 3-WAY ELECTRONIC BALL VALVE 11		LIGHT SUB
59	M200	PLUMBING COUPLING STRAIGHT 2" X 4 1/2" LONG, BANJO M200CPG	-	-
60	8MM NYLON	(OPTION 70013) ACE SPRAY PUMP BLEED TO PRODUCT TANK	5000	LIGHT SUB
61	3" PVC	PRODUCT TANK OVERFLOW HOSE	4000	TANKS
62	1 1/2" PVC	RINSE TANK OVERFLOW	1100	LIGHT SUB
63	1" P	PRESSURE FILTER TO FILTER CLEAN TEE	1000	LIGHT SUB
64	1" P	FILTER CLEAN TEE TO FILTER CLEAN MANIFOLD VALVE	275	LIGHT SUB
65	3/4" P	FILL PUMP RELIEF DRAIN	500	LIGHT SUB
66	1 1/2" P	(OPTION 65217 & 80110 SPOT SPRAY) FRONT TANK BULKHEAD TO 3-WAY VALVE 2		STG 3
67	1 1/2" P	(OPTION 65217 & 80110 SPOT SPRAY) 3-WAY VALVE 2 TO SPOT SPRAY BOOM LINE 2		STG 3
68	1 1/2" P	BOOM TEE TO SPOT SPRAY BOOM PLUMBING		BOOMS
69	1" P	(OPTION 65217 & 80110 SPOT SPRAY) FRONT TANK VALVE TO 3-WAY FRONT TANK VALVE 12		STG 3
70	1 1/2" P	(OPTION 65215 & 80110 ADDITIONAL CAPACITY) FRONT TANK BULKHEAD TO 2-WAY VALVE 4		STG 3
71	6MM NYLON	BOOM RECIRC VALVE TO PRESSURE GAUGE	10200	STG 3
72	6MM NYLON	SPOT SPRAY BOOM SPRAY PRESSURE LINE		STG 3
73	6MM NYLON	BOOM PRESSURE GUAGE TO DRAIN VALVE	4500	STG 3
74	6MM NYLON	BOOM SECOND LINE PRESSURE GUAGE TO DRAIN VALVE		STG 3
75	1" P	SPOT SPRAY BOOM RECIRCULATION 3-WAY ELECTRONIC BALL VALVE 14 TO PUMP POD MANIFOLD		STG 3
76	1 1/2" P	RETURN TO MAIN TANK - 2-WAY / 3-WAY VALVE TO MAIN TANK		STG 3
77	1 1/2" P	PRESSURE SUPPLY LINE FROM FRONT TANK BULK HEAD TO FRONT TANK PRESSURE BALL VALVE		STG 3
78	1 1/2" P	RETURN LINE FROM FRONT TANK RETURN BALL VALVE TO FRONT TANK BULK HEAD		STG 3
79				
80	1" POLY	BOOM RECIRCULATION PIPE		STG 1

GA7500201	Schematic, Plumbing, Large Frame	REV
GOLDACRES	SP, Series 3, MY25	00

Plumbing Schematic, Sprayer Function Table

SPRAYER FUNCTION TABLE																	
		FILL PUMP	VALVE 1 3-WAY BL	VALVE 2 3-WAY SL	VALVE 3 3-WAY BL	VALVE 4 2-WAY	VALVE 5 3-WAY BL	VALVE 6 3-WAY MANIFOLD	VALVE 7 3-WAY SL	VALVE 8 2-WAY	VALVE 9 2-WAY	VALVE 10 2-WAY	VALVE 11 3-WAY BL	VALVE 12 3-WAY BL	VALVE 13 3-WAY BL	VALVE 14 3-WAY BL	VALVE 15 3-WAY BL
	Valve Description	FILL PUMP	Tank Selector Valve	Boom Regulating Valve	Tank Rinse Valve	Tank Agitation Valve	Hopper Bypass Valve	Filter Clean Valve	Boom Recirculation Valve	Rinse Tank Fill Valve	Auto-Shutoff Valve	Front Fill Auto-Shutoff Valve	Front Tank Fill Valve	Front Tank Recirculation Valve	Front Tank Valve	Spot Spray Boom Recirc Valve	Front Tank Valve
	GA No.	GA2000575	GA2000143	GA2000065	GA2000583	GA2000141	GA2000142	GA2000586	GA5077319	GA2000141	GA2000144	GA2000144					
OPTIONS	Valve Location		Pump Pod	Pump Pod	Pump Pod	Pump Pod	Pump Pod	Pump Pod	Centre	Fill Pod	Top of Tank	Top of Tank	Within Chassis	Front of Tank	Front of Tank	Centre	Front of Tank
Standard	Default	-	-	-	-	-	-	-	-	-	-	-	-	-	-	-	-
	Spray Pump Main	-	A	-	-	-	A	-	-	-	-	-	-	-	-	-	-
	Spray Pump Rinse	-	B	-	-	-	A	-	-	-	-	-	-	-	-	-	-
	Fill Product Tank - Side	-	-	-	-	-	-	-	-	-	A	-	-	-	-	-	-
	Fill Rinse Tank	ON	-	-	-	-	-	-	-	A	-	-	-	-	-	-	-
	Agitation	-	-	-	-	A	-	-	-	-	-	-	A	-	-	-	-
	Hopper	-	-	-	-	-	B	-	-	-	-	-	-	-	-	-	-
	Tank Rinse - Spray Pump	-	-	-	B	-	-	-	-	-	-	-	-	-	-	-	-
	Tank Rinse - Fill Pump	ON	-	-	A	-	-	-	-	-	-	-	-	-	-	-	-
	Spray - Product Tank to 1st Line	-	A	REG	-	-	A	-	-	-	-	-	-	-	-	-	-
	Boom Recirculation	-	-	-	-	-	-	-	A	-	-	-	-	-	-	-	-
	Filter Clean	-	-	-	-	-	-	A	-	-	-	-	-	-	-	-	-
	Udor Pump Deadhead	-	-	-	-	-	-	-	-	-	-	-	-	-	-	-	-
Front Fill	Main Tank Fill - Front Fill	-	-	-	-	-	-	-	-	-	-	A	-	-	-	-	-
Front Tank	Transfer - Front to Rear	-	-	-	-	-	-	-	-	-	-	-	-	-	B	-	A
	Transfer - Rear to Front	-	A	-	-	-	-	-	-	-	-	-	B	B	-	-	-
	Spraying - Front Tank to 2nd Line	-	-	-	-	-	-	-	-	-	-	-	-	A	A	-	-
	Spraying - Both Lines	-	A	REG	-	-	A	-	-	-	-	-	-	A	A	-	-
	Spraying - 2nd Line and Transferring from Rear to Front	-	A	-	-	-	-	-	-	-	-	-	B	B	A	-	-
	Spraying - Main Line and Trans- ferring from Front to Rear Tank	-	A	REG	-	-	A	-	-	-	-	-	-	-	B	-	-
	Boom Recirculation - 2nd Boom Line	-	-	-	-	-	-	-	-	-	-	-	-	-	-	A	-

Electrical Schematic, Cabin Layout, Claas X11

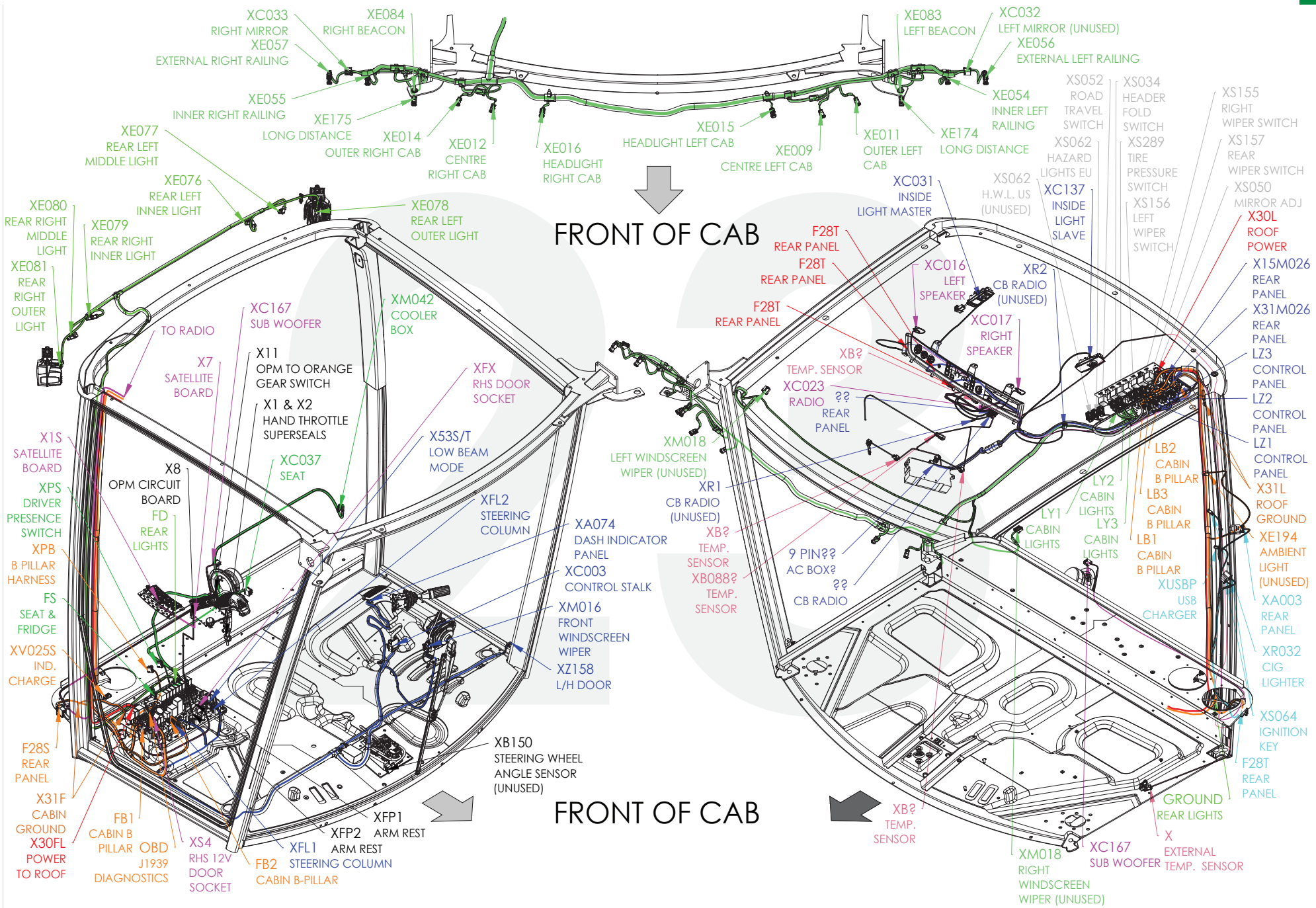

Electrical Schematic, Cabin Kit

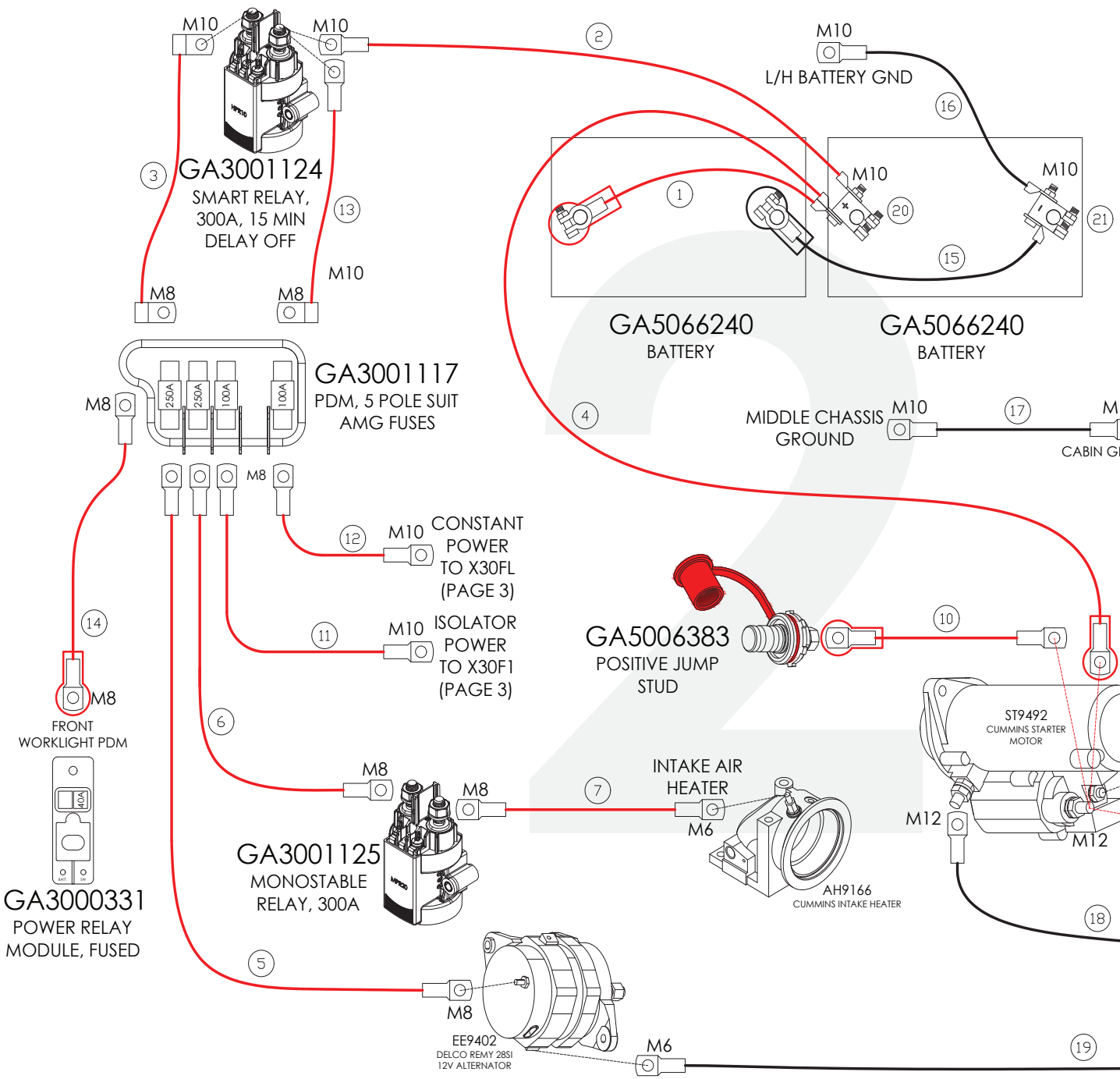

GA3001247 CABLE LIST

ITEM #	LENGTH	WIRE mm²	END A	END B	DESCRIPTION
11	2900	35	M8	M10	CAB SWITCHED
12	2900	35	M8	M10	CAB BATTERY

GA3001248 CABLE LIST

ITEM #	LENGTH	WIRE mm²	END A	END B	DESCRIPTION
1	330	50	4010-005P	M10	POS BATT LINK
4	1480	50	M10	M12	STARTER
5	1550	50	M8	M8	ALTERNATOR FEED
7	800	35	M8	M6 OR 1/4" 90DEG	INTAKE HEAT
8	300	4	M6	M12	START SOL
9	500	4	M6	M5	START SOL
10	850	35	M12	M10	JUMP STUD
15	330	50	4010-005N	M10 90 DEG	NEG BATT LINK
16	1300	70	M10	M10	BATTERY CHASSIS
17	640	70	M10	M10	CABIN GND
18	670	70	M12	M10	STARTER GND
19	630	70	M6	M10	ALTERNATOR GND

GA3001249 CABLE LIST

ITEM #	LENGTH	WIRE mm²	END A	END B	DESCRIPTION
2	500	25	M10	M10 90 DEG	BATT TO ISOLATOR
3	FIGURE B	25	M8 FLAG AMP 321060	M10 FLAG TE 321121	ISOLATOR TO BUSBAR
6	430	25	M8	M8	INTAKE RELAY
13	100	16	M8	M10	BATT TO BUSBAR
14	300	6	M8	M8	PDM TO BUS

Electrical Schematic, Main Cab & Floor Harness

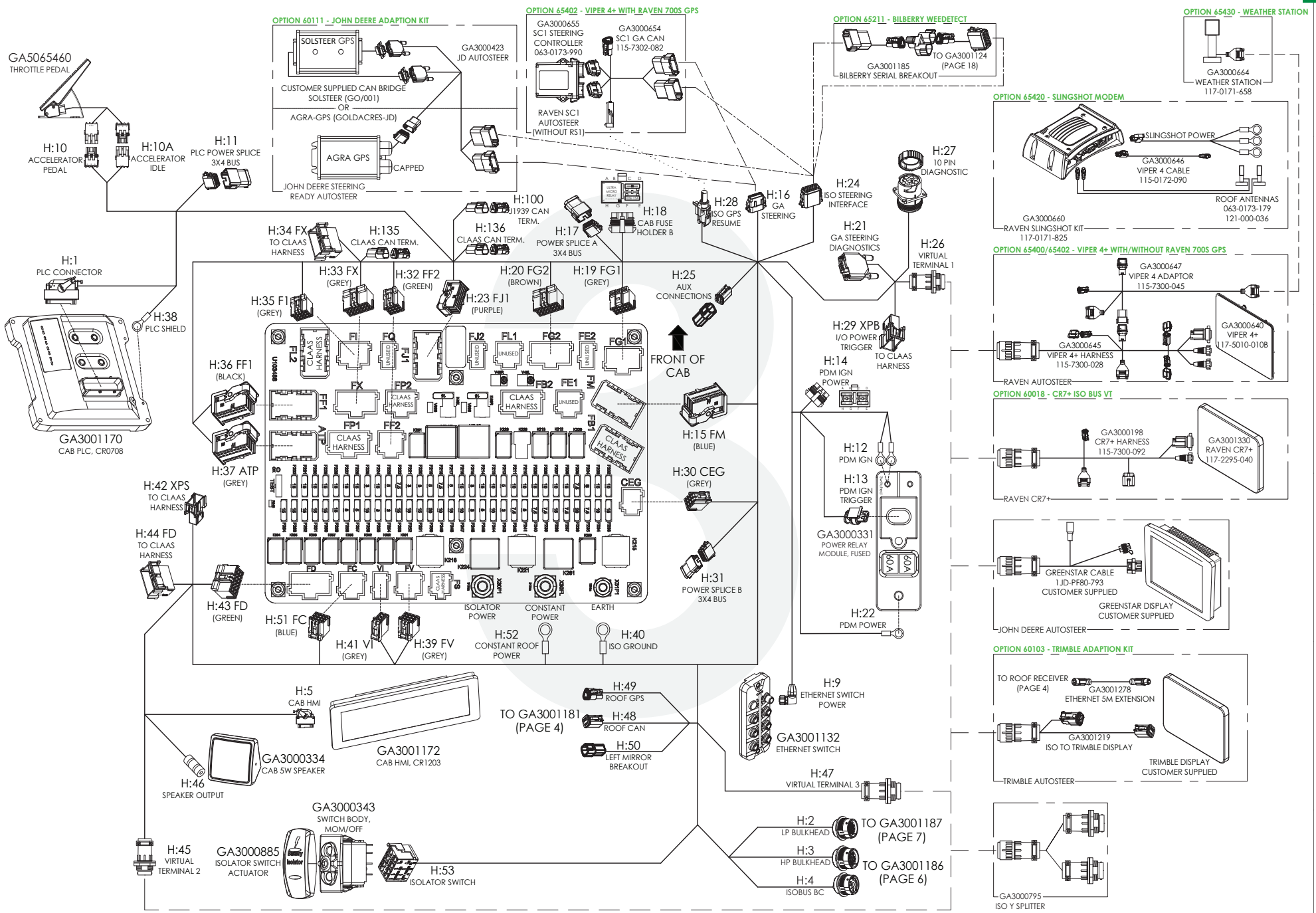

Electrical Schematic, Cabin, Main

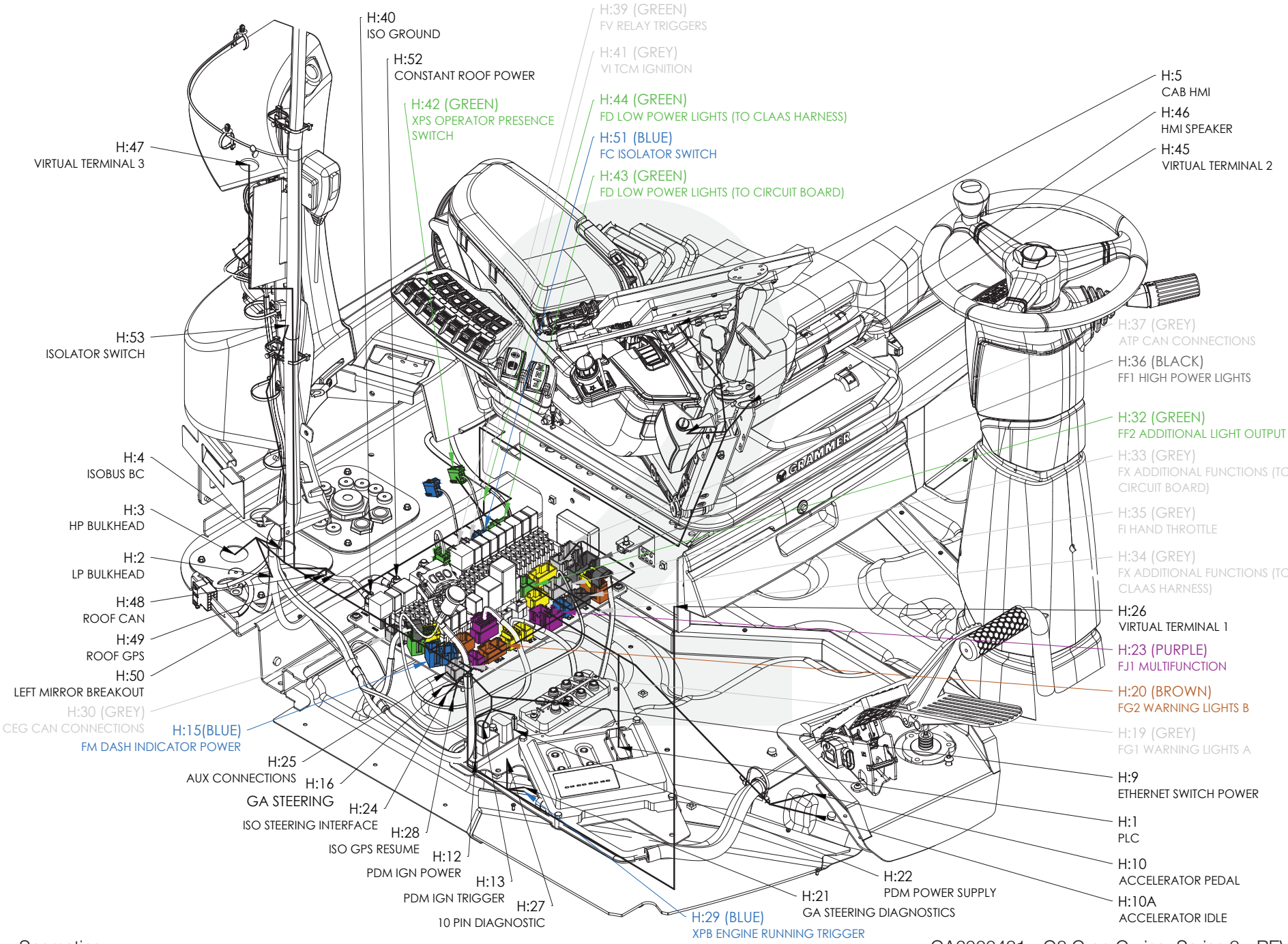

Electrical Schematic, Cabin Roof & Arm Rest

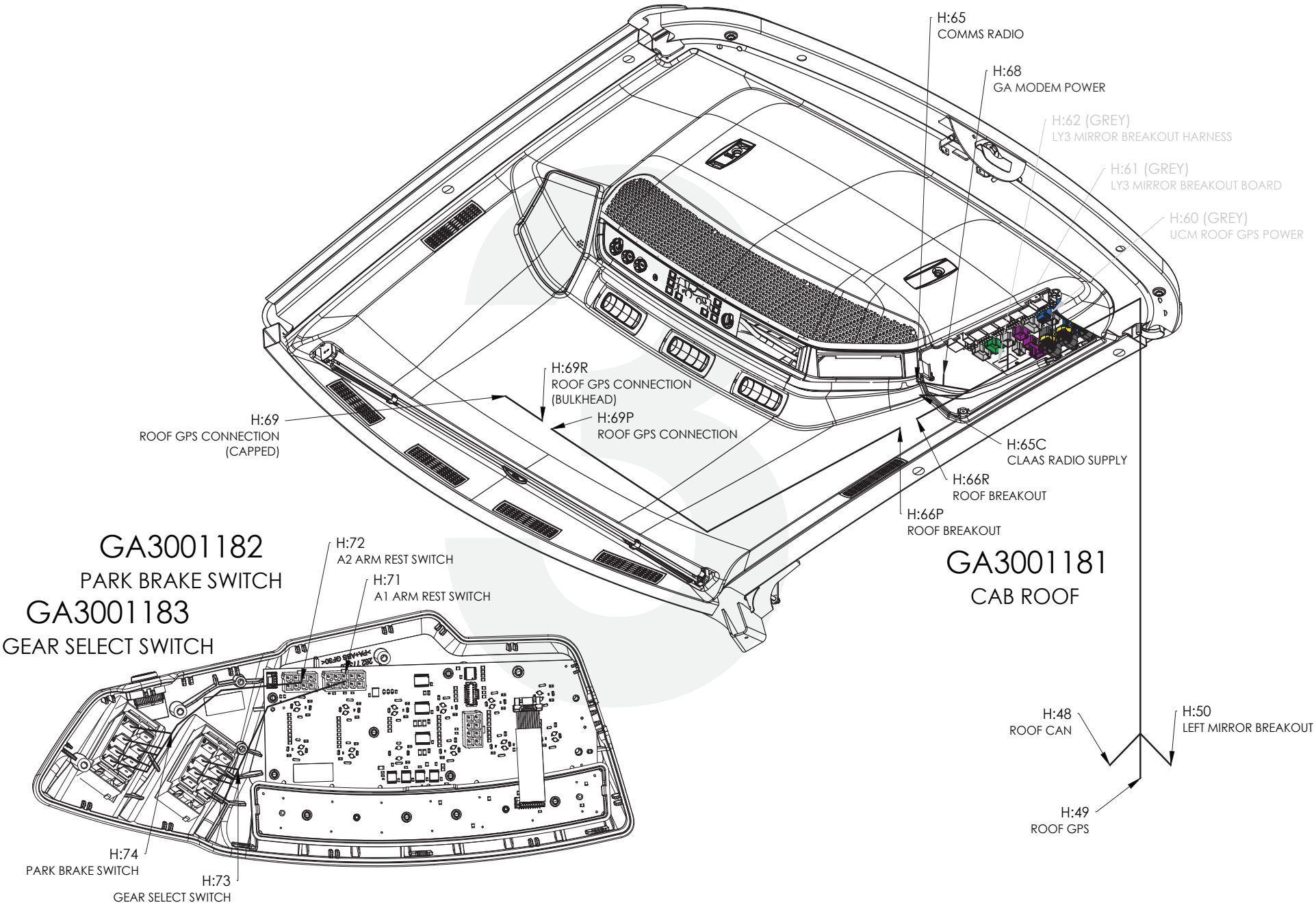

Electrical Schematic, Console Switches

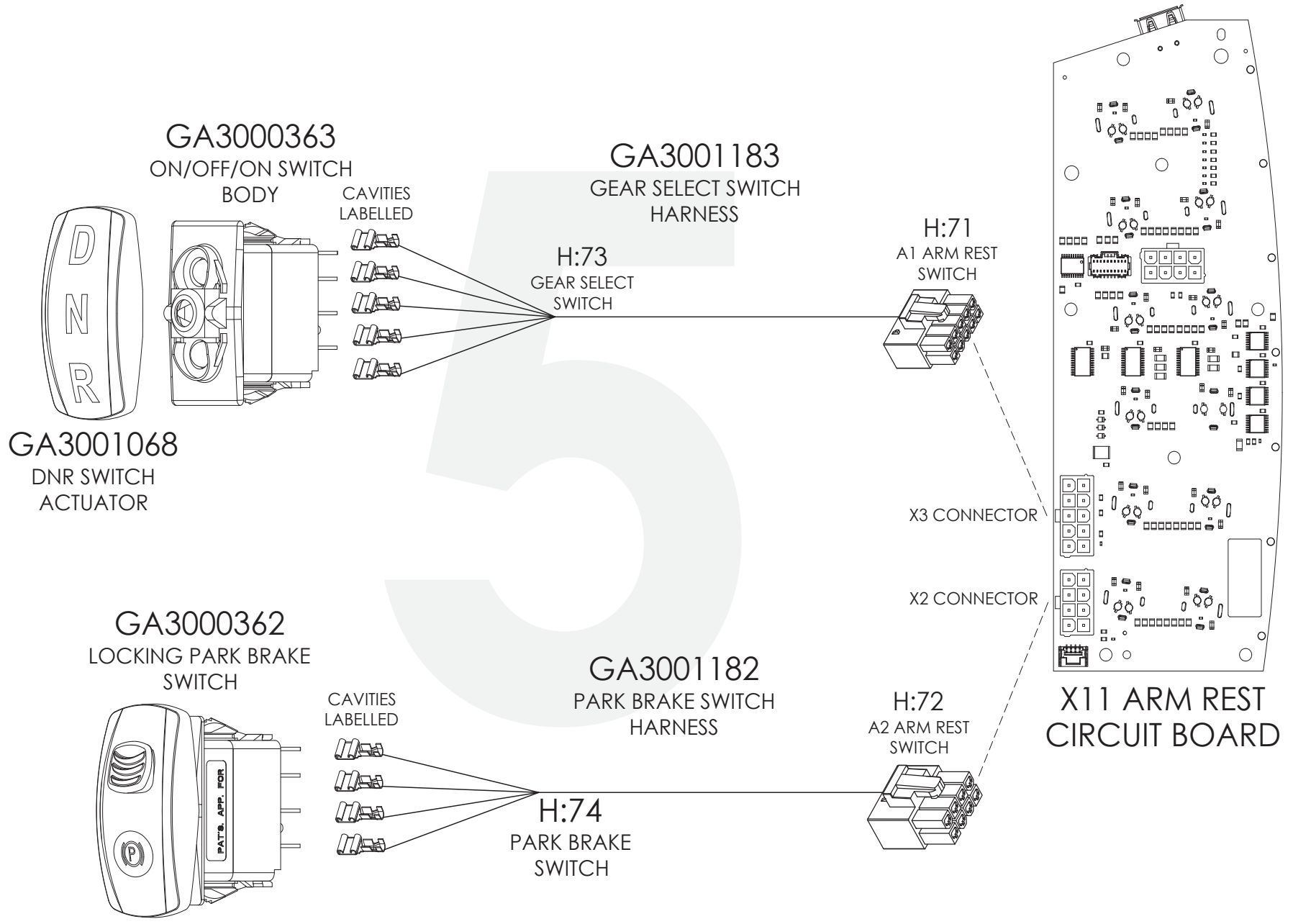

Electrical Schematic, Cabin Roof, UHF & Receivers

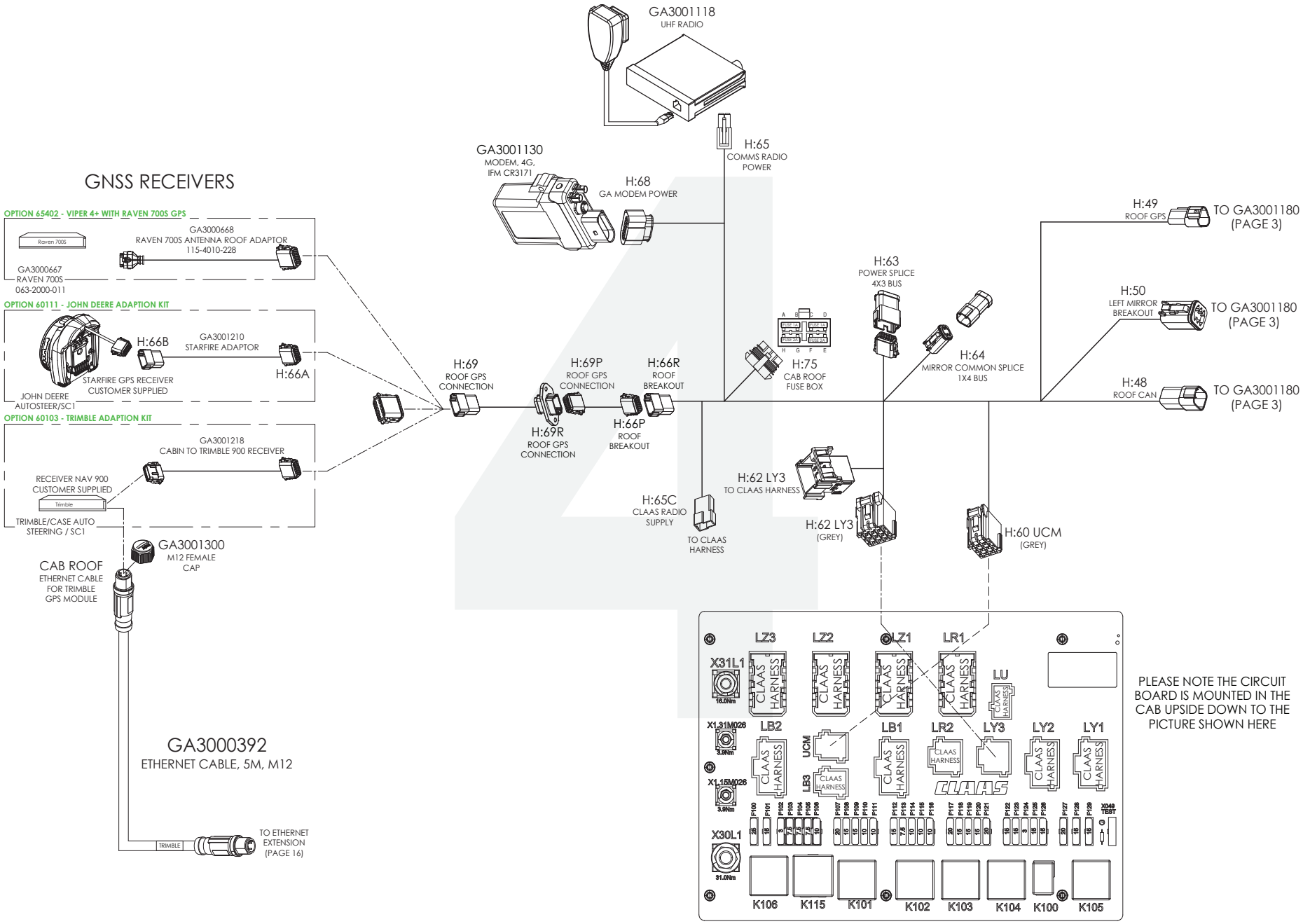

Electrical Schematic, Centre PLC & RCM

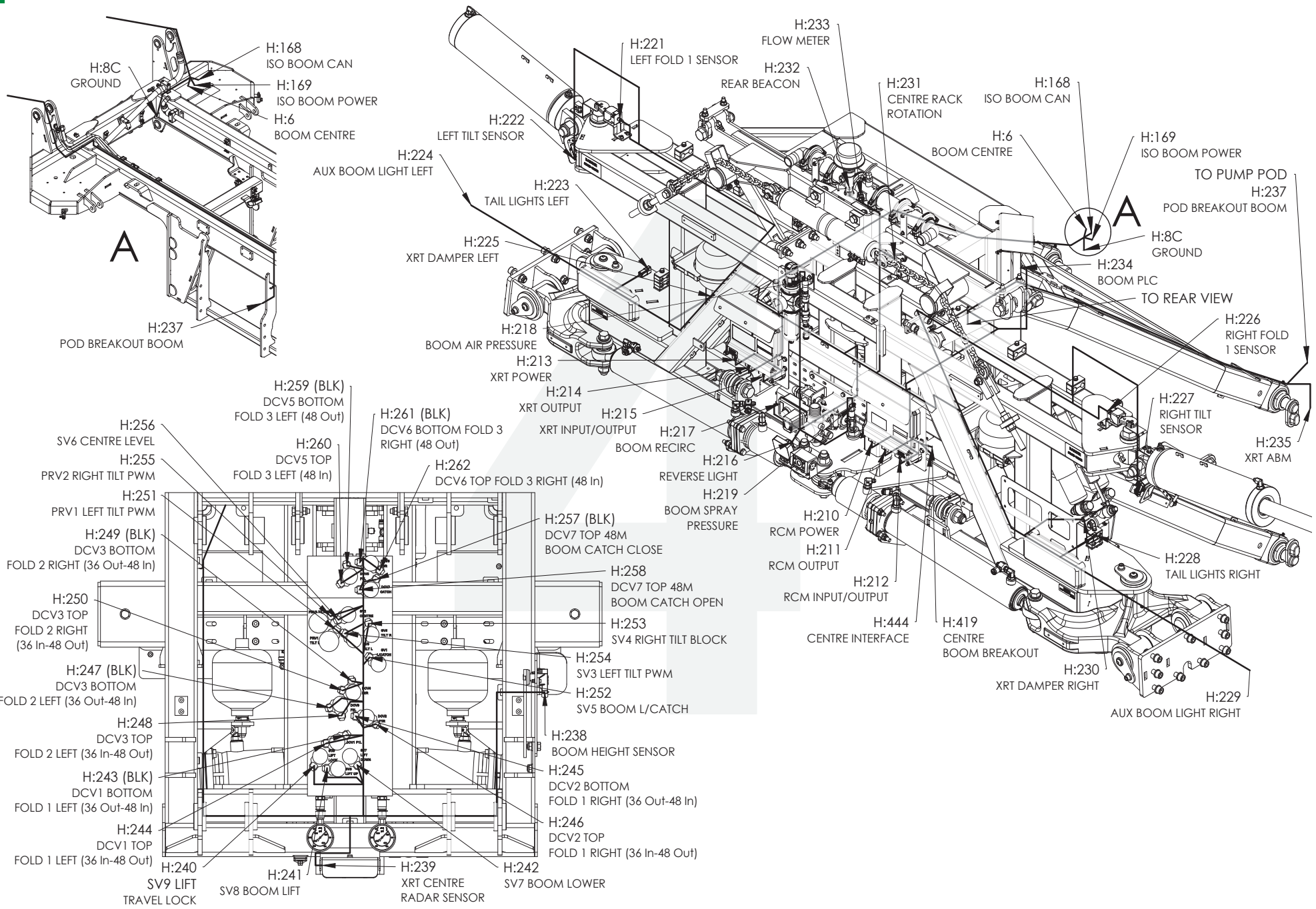

Electrical Schematic, Plumbing Pod Module Chart

MODULE C	
Connector 7	**Connector 8**
Front Tank Pos.	Front P. RPM
Front Tank Lvl	Front P. Press
Connector 5	**Connector 6**
Unused	Unused
Rinse Tank Lvl	Fill P. Press
Connector 3	**Connector 4**
Hyd. Blockage	Spray P. RPM
Hyd. Pressure	Spray P. Press.
Connector 1	**Connector 2**
Diff Lock FB	Unused
Main Tank Lvl	Air Tank Press.

MODULE B	
Connector 7	**Connector 8**
Unused	Cool Fan PWM
Unused	Auto Grease
Connector 5	**Connector 6**
Tran. Oil Temp	Side Fill S. Off
Brake Pedal	Front Fill S. Off
Connector 3	**Connector 4**
Trans Oil. Lvl	Rinse Tank Fill
Fuel Tank Lvl	Diff Lock Eng.
Connector 1	**Connector 2**
Hyd. Low Lvl	Boom Rest In
Hyd. Oil Temp	Boom Rest Out

MODULE A	
Connector 7	**Connector 8**
F2R Transfer	Front T. Spray
R2F Transfer	R2F Transfer
Connector 5	**Connector 6**
Agitator Jet	Hop. Bypass
Press. Filt. Cln	Hop. Induct
Connector 3	**Connector 4**
Suction Main	T. Rinse (Fill)
Suction Rinse	Rinse (Press)
Connector 1	**Connector 2**
Fence J. Left	Fence J. Right
Red Tip Lights	Boom Recirc 2

Electrical Schematic, Plumbing Pod, Layout

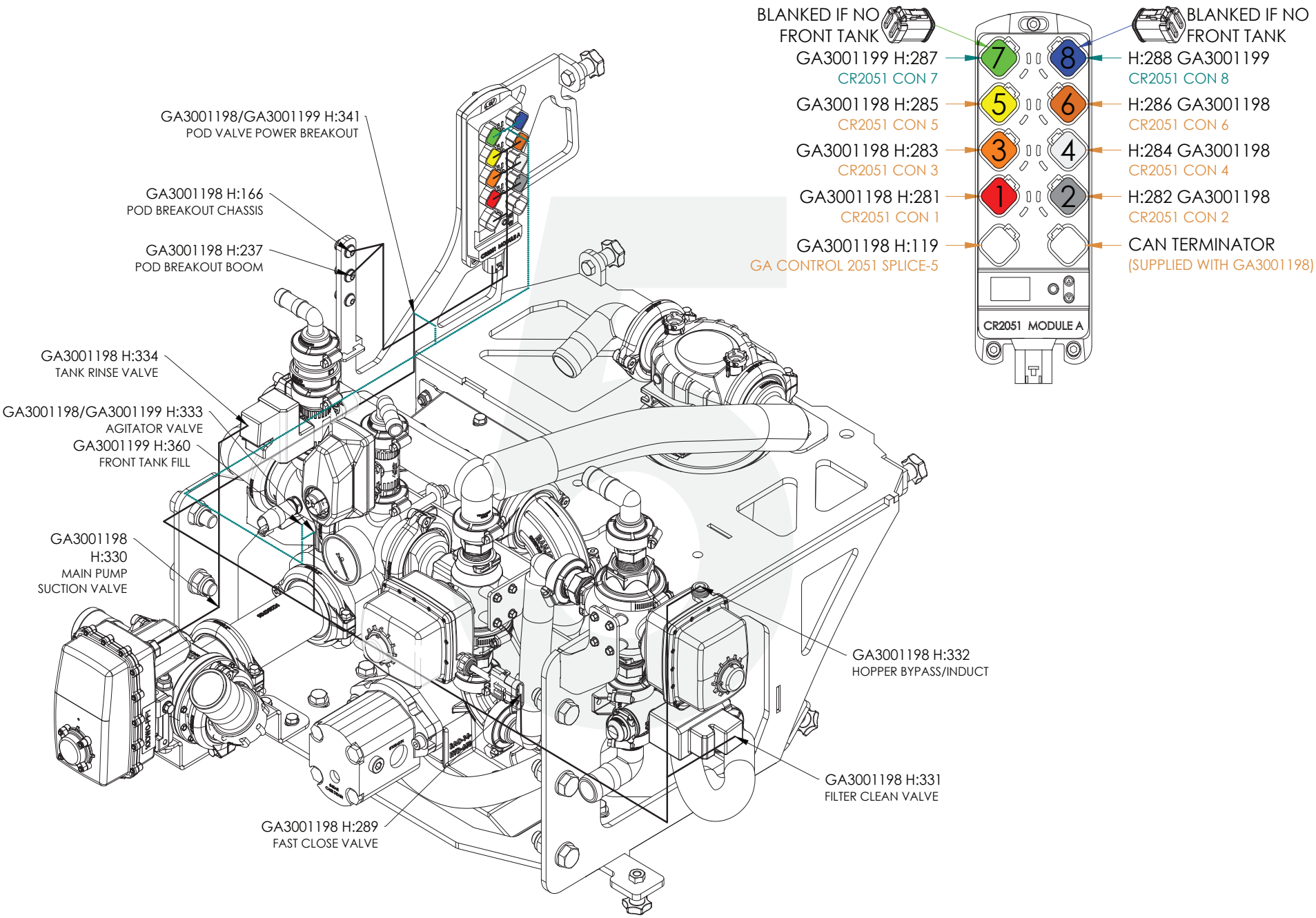

Electrical Schematic, Plumbing Pod, Module ‘A’

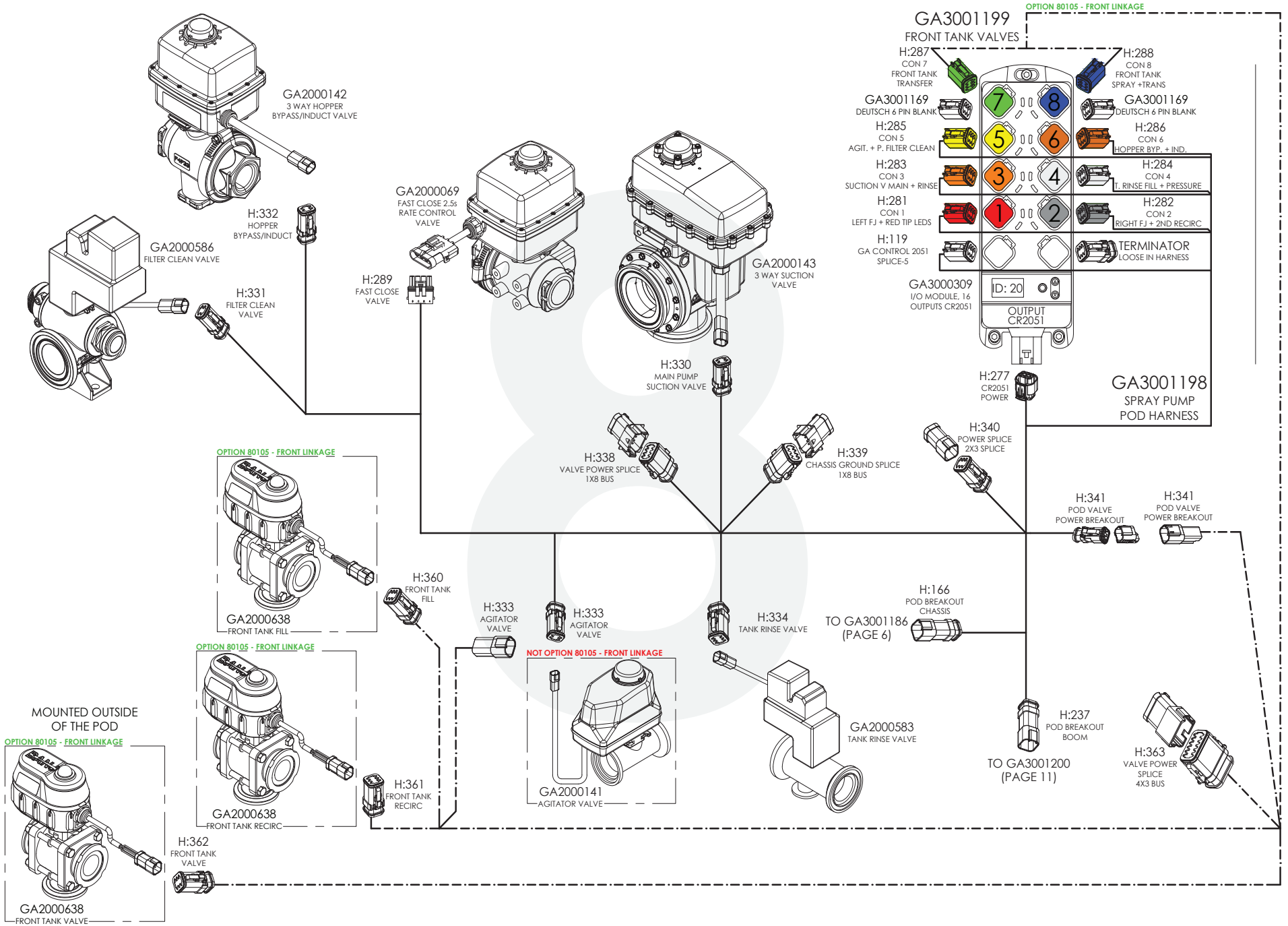

Electrical Schematic, Plumbing Pod, Module ‘B’

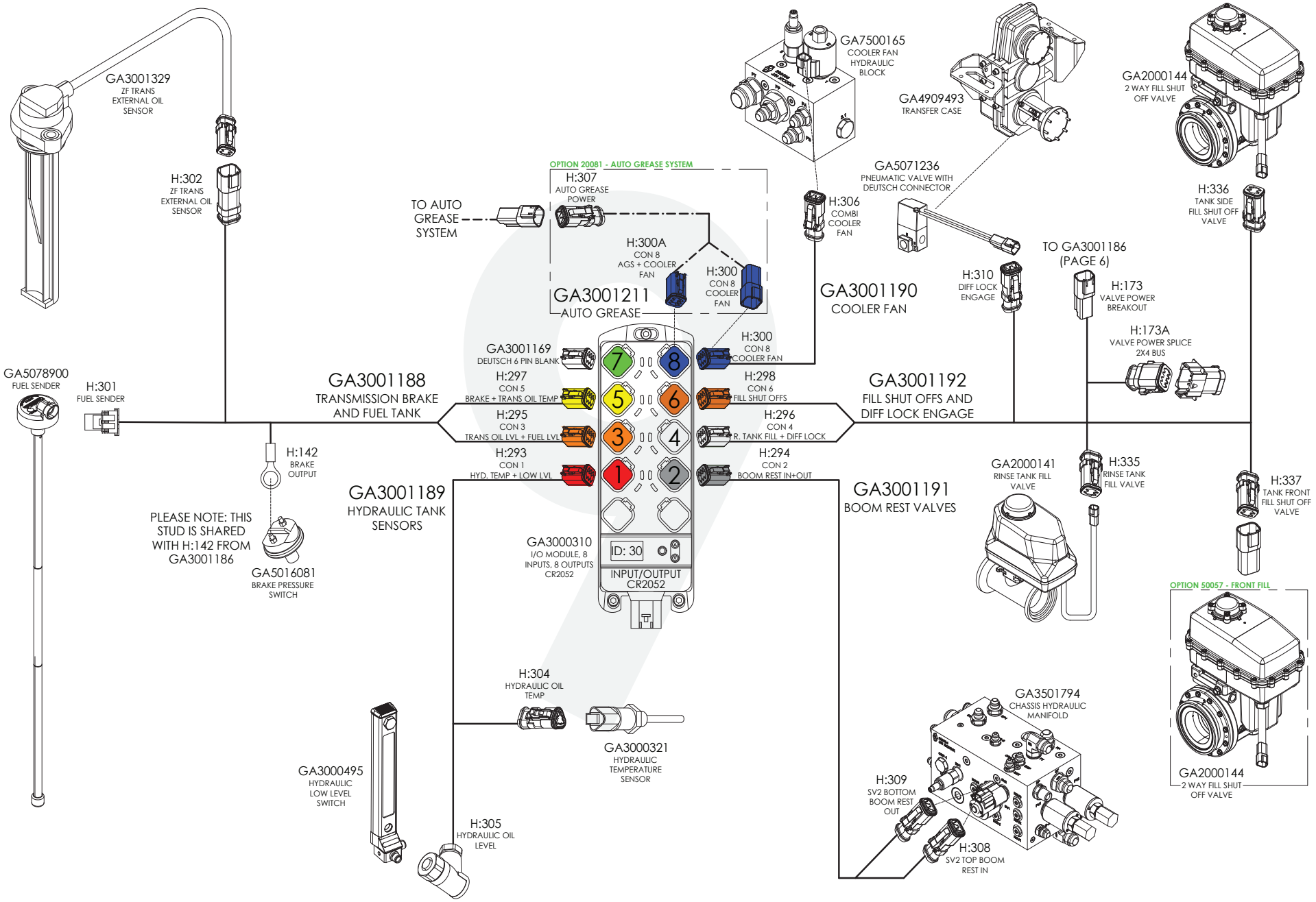

Electrical Schematic, Plumbing Pod, Module ‘C’

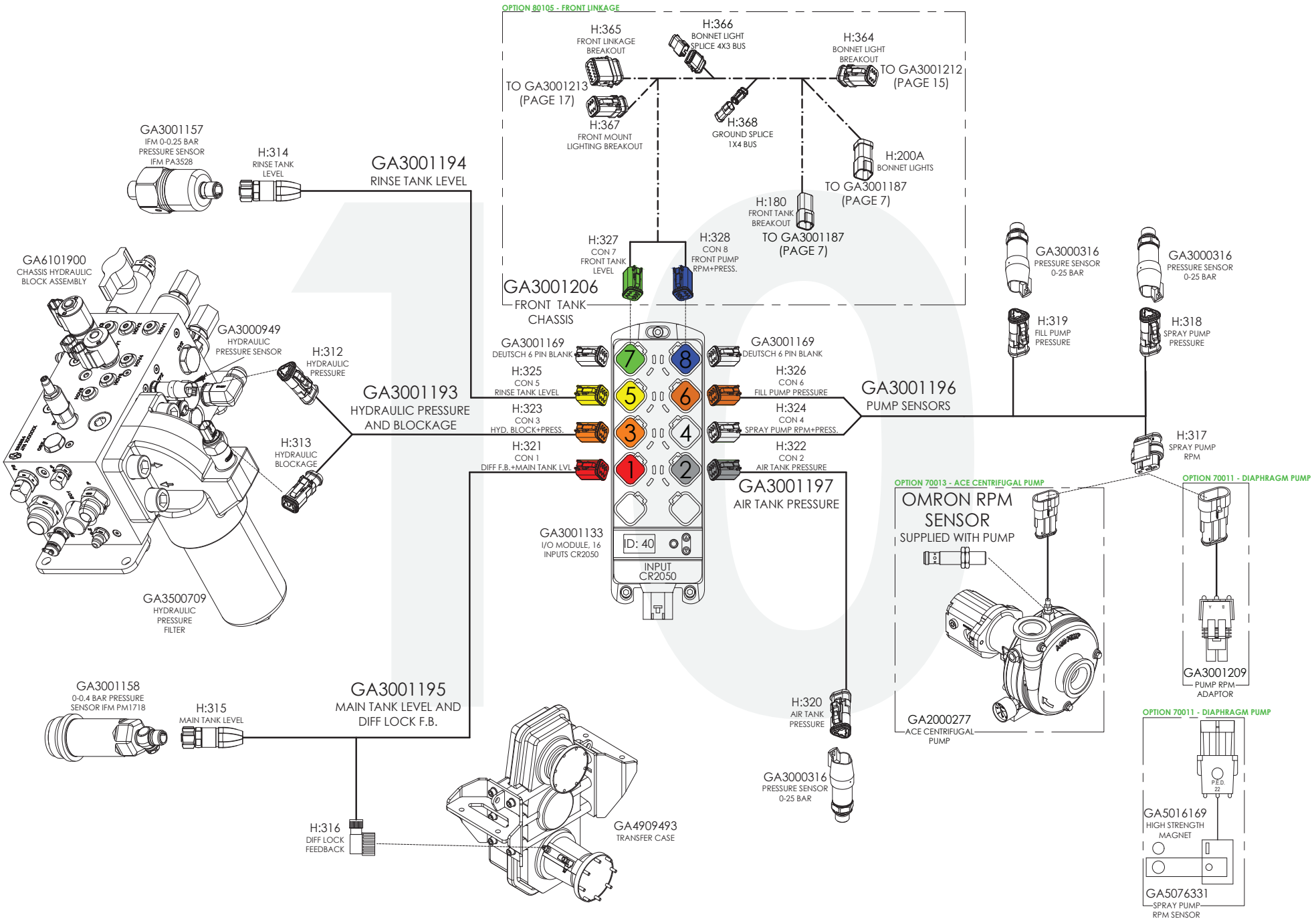

Electrical Schematic, Chassis, Layout, Auto Grease, Tank Fill & Cooler

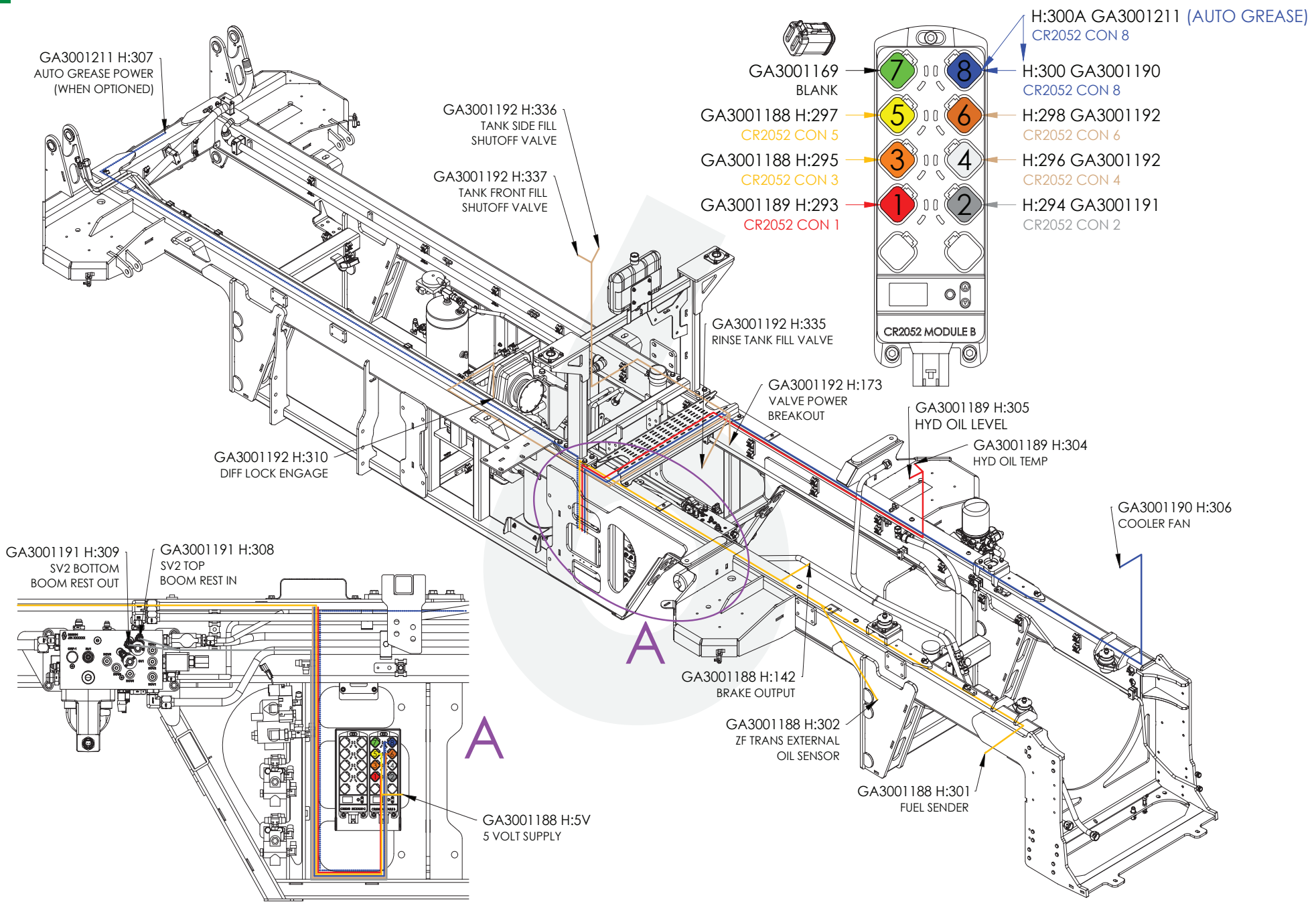

Electrical Schematic, Chassis, Main Tank, Front Mount & Spray Pump

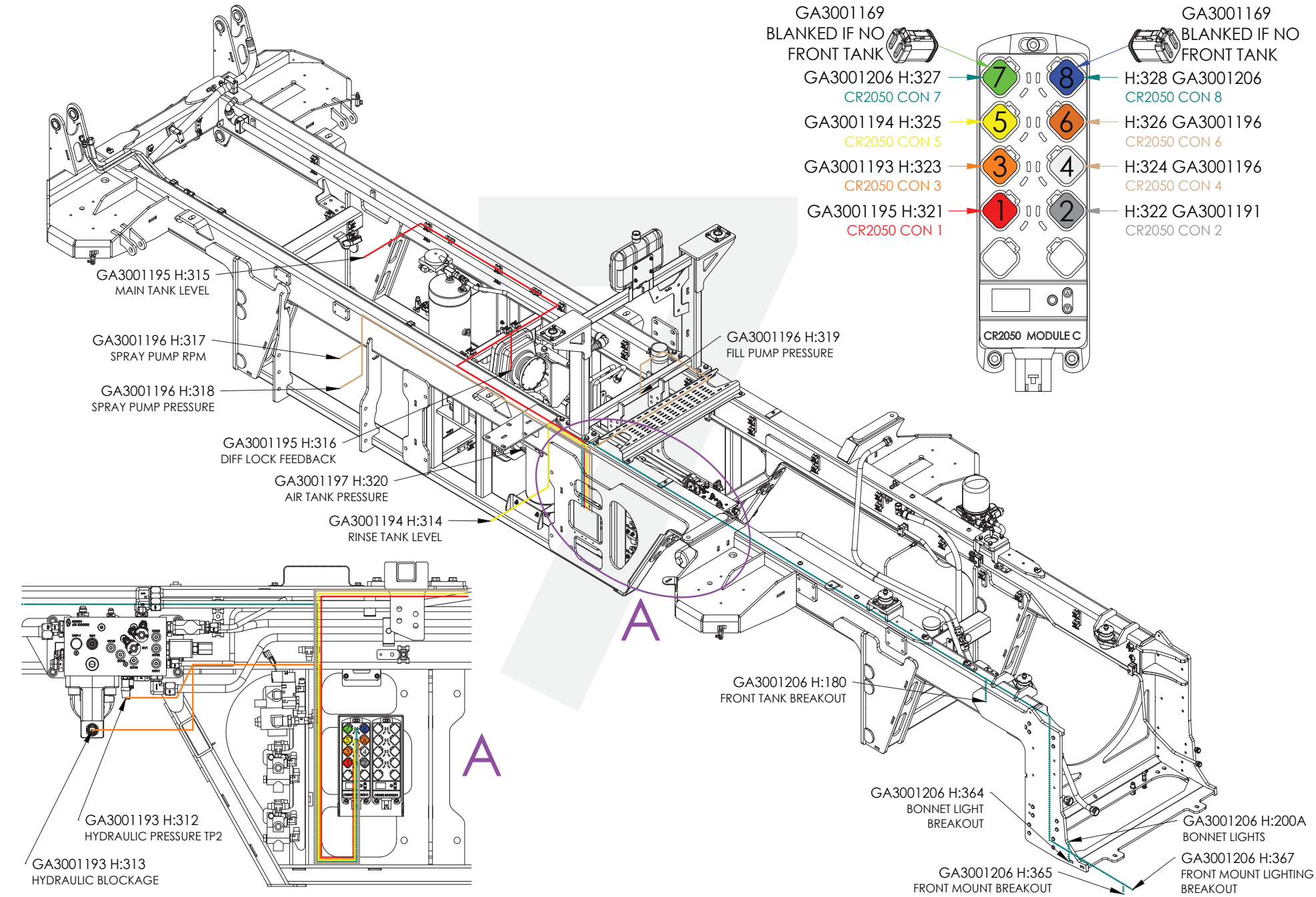

Electrical Schematic, Chassis, Main, High Current Layout

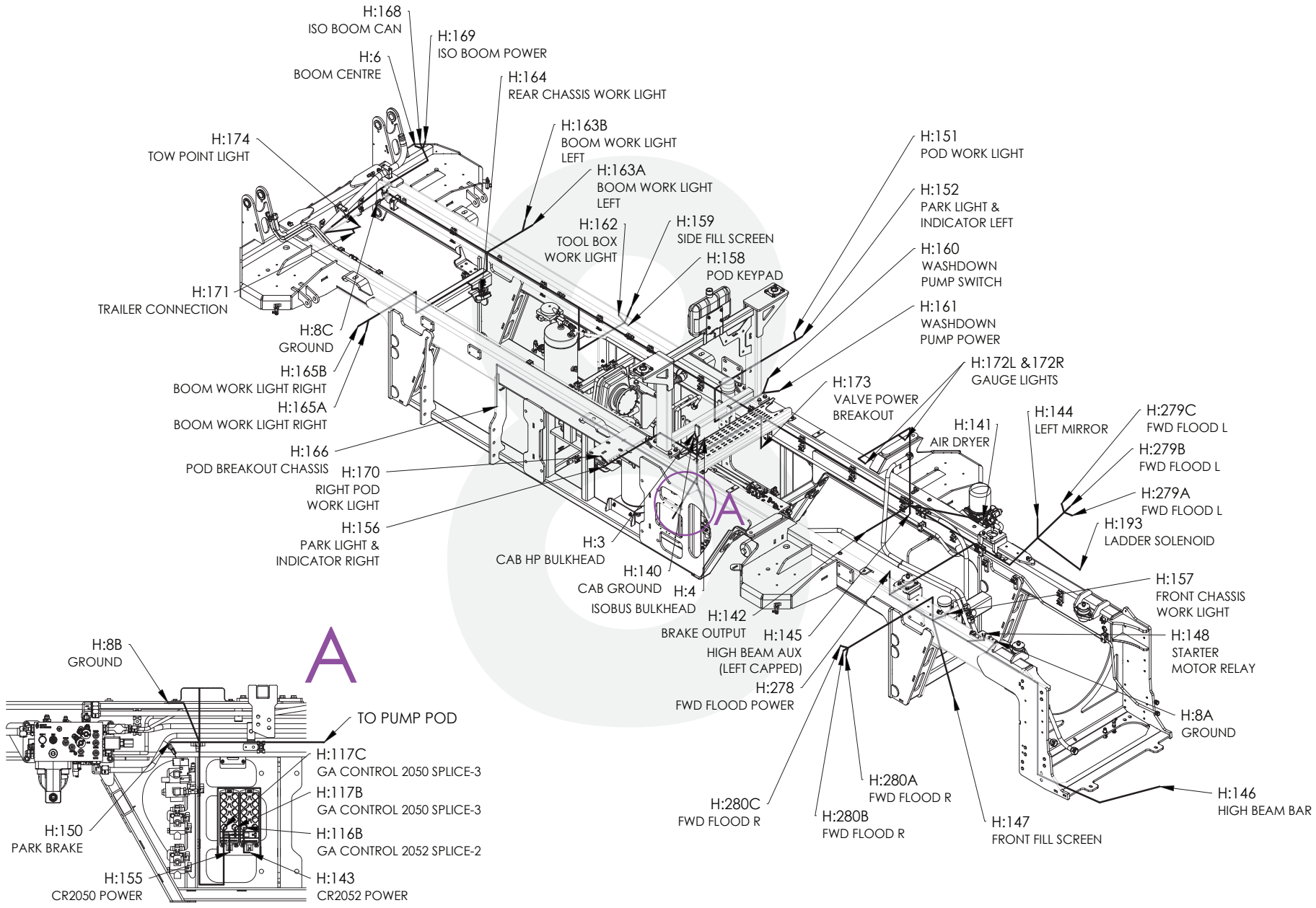

Electrical Schematic, Chassis, High Power

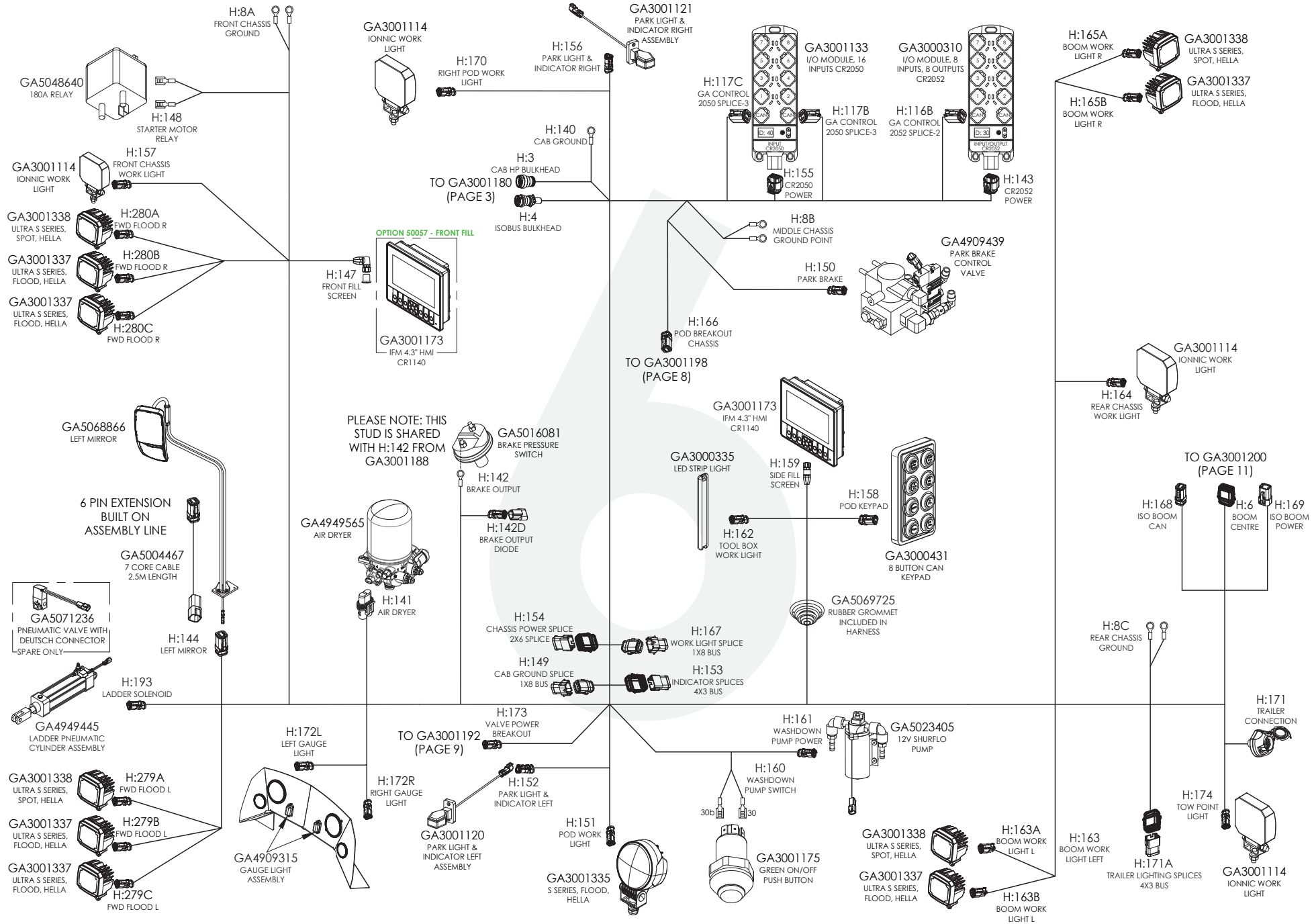

Electrical Schematic, Chassis, Main, Low Current Layout

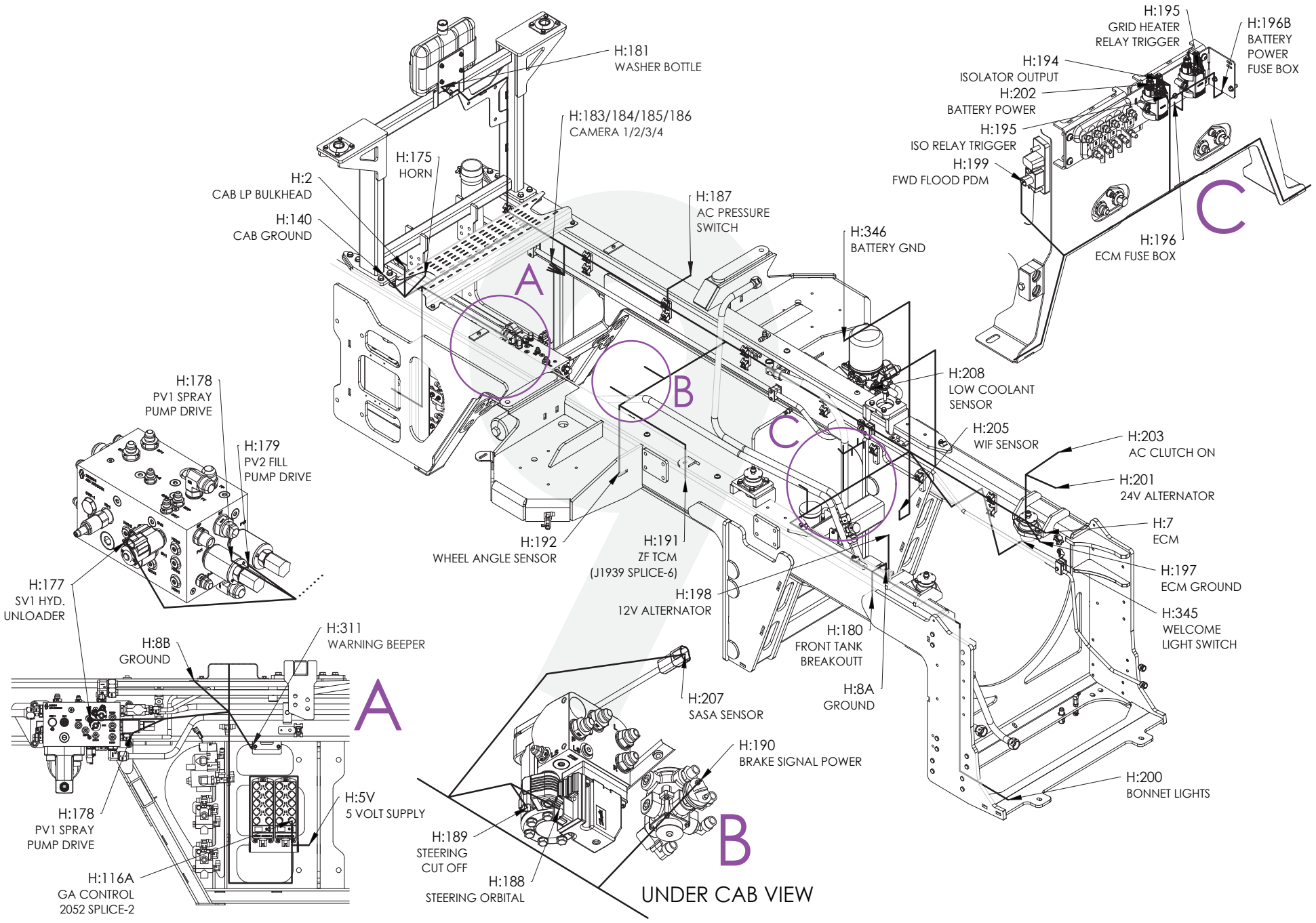

Electrical Schematic, Chassis, Low Power

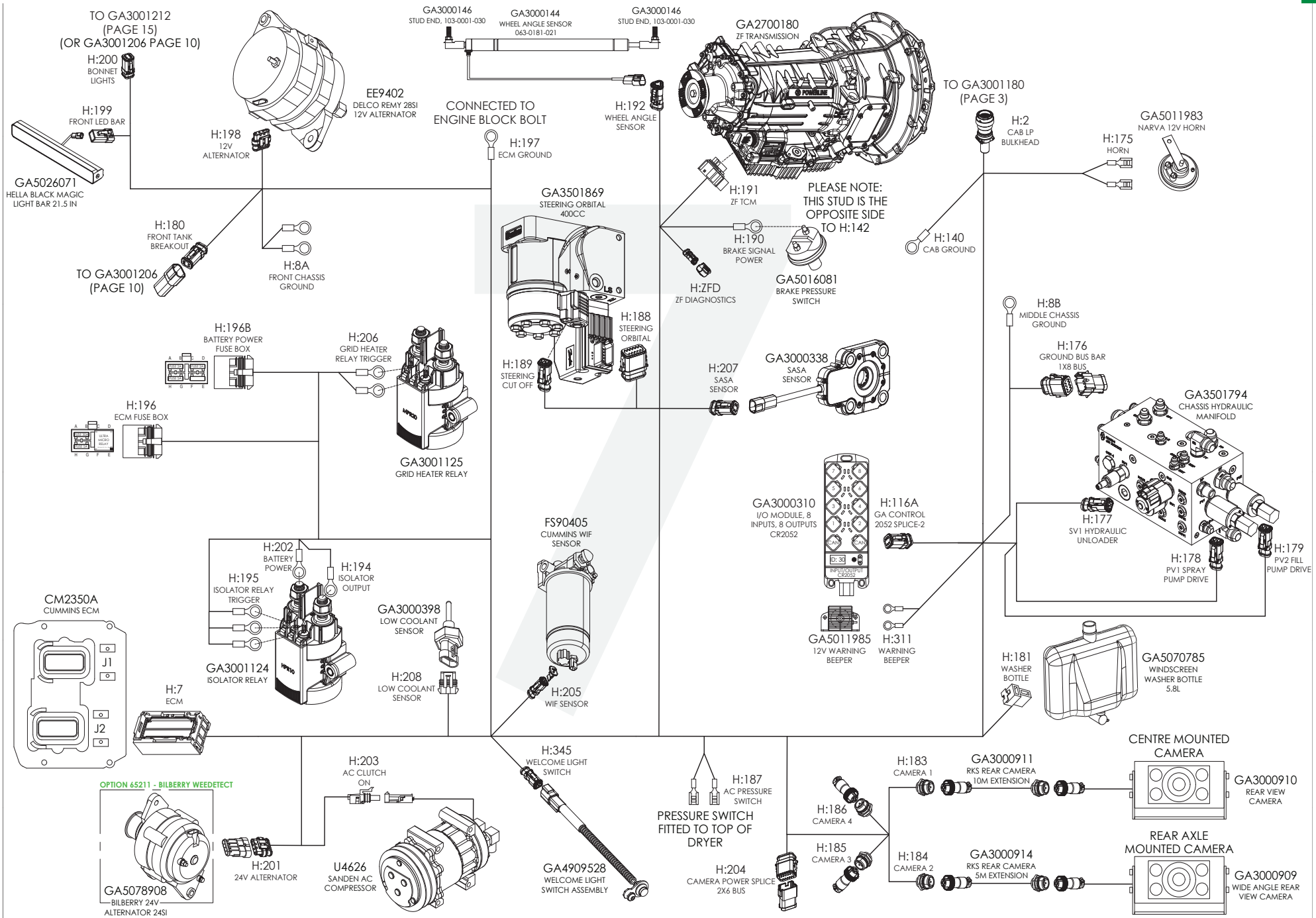

Electrical Schematic, Chassis, Centre Harness to Boom Manifold

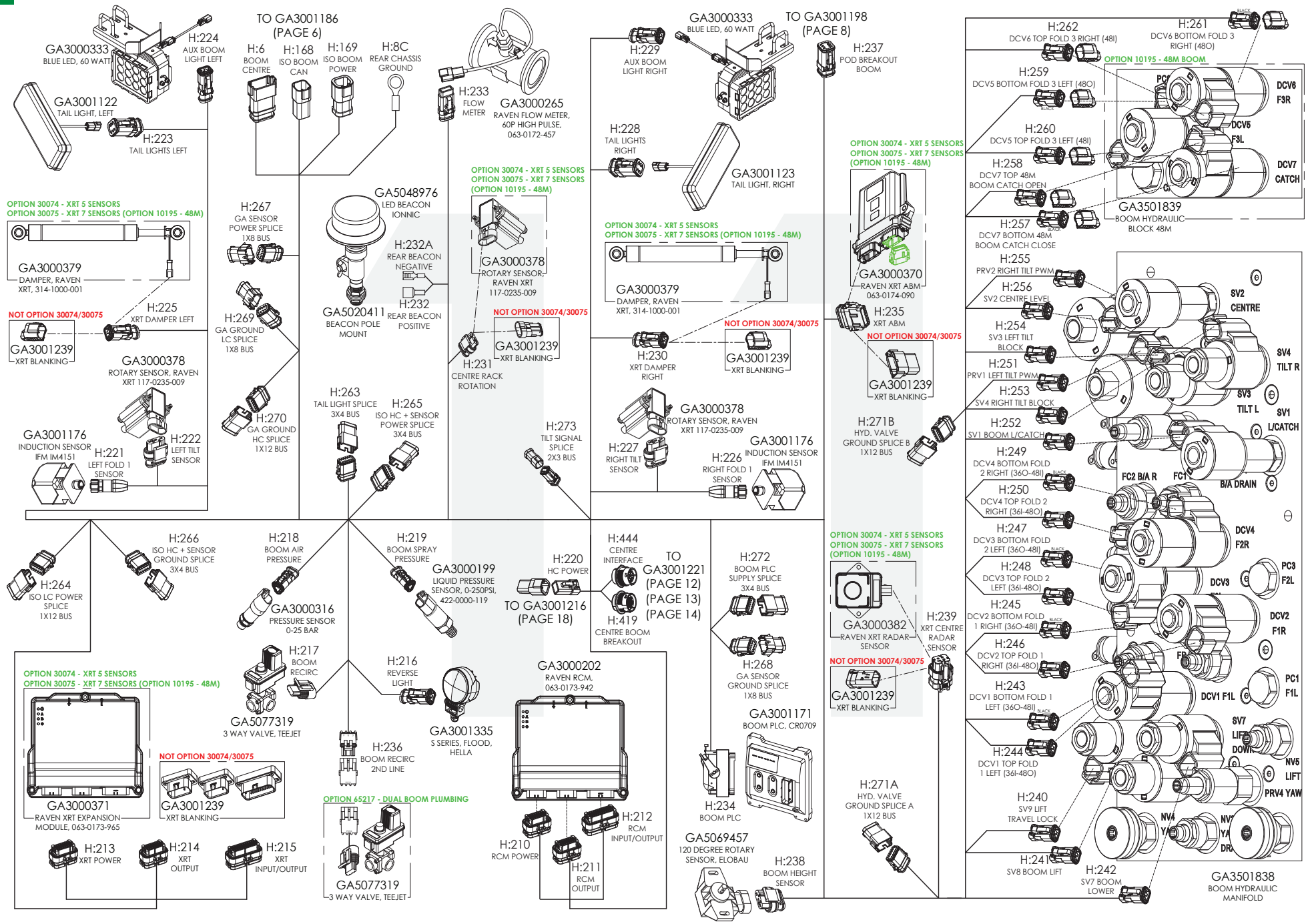

Electrical Schematic, Boom, 36mt

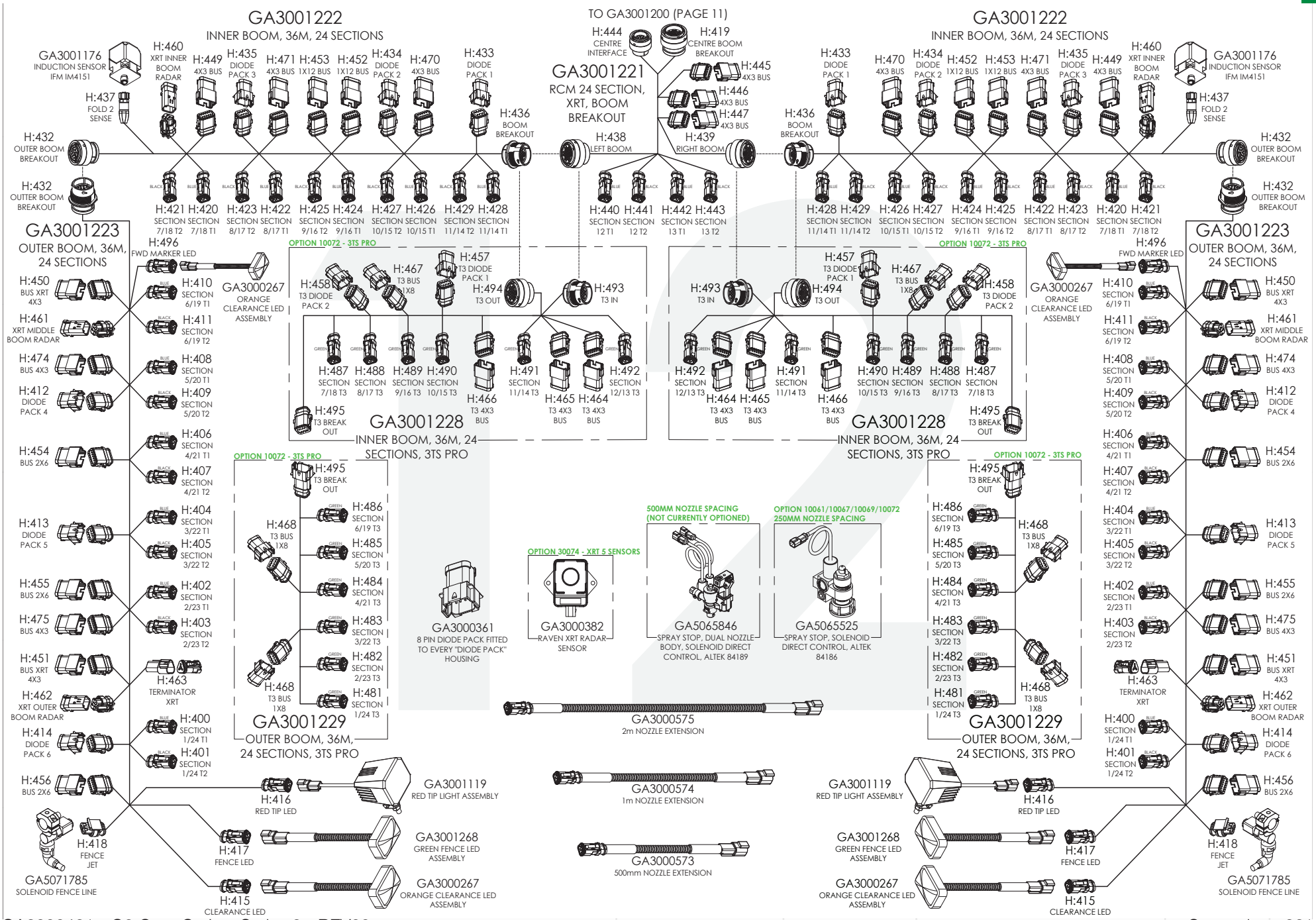

Electrical Schematic, Boom, 42mt

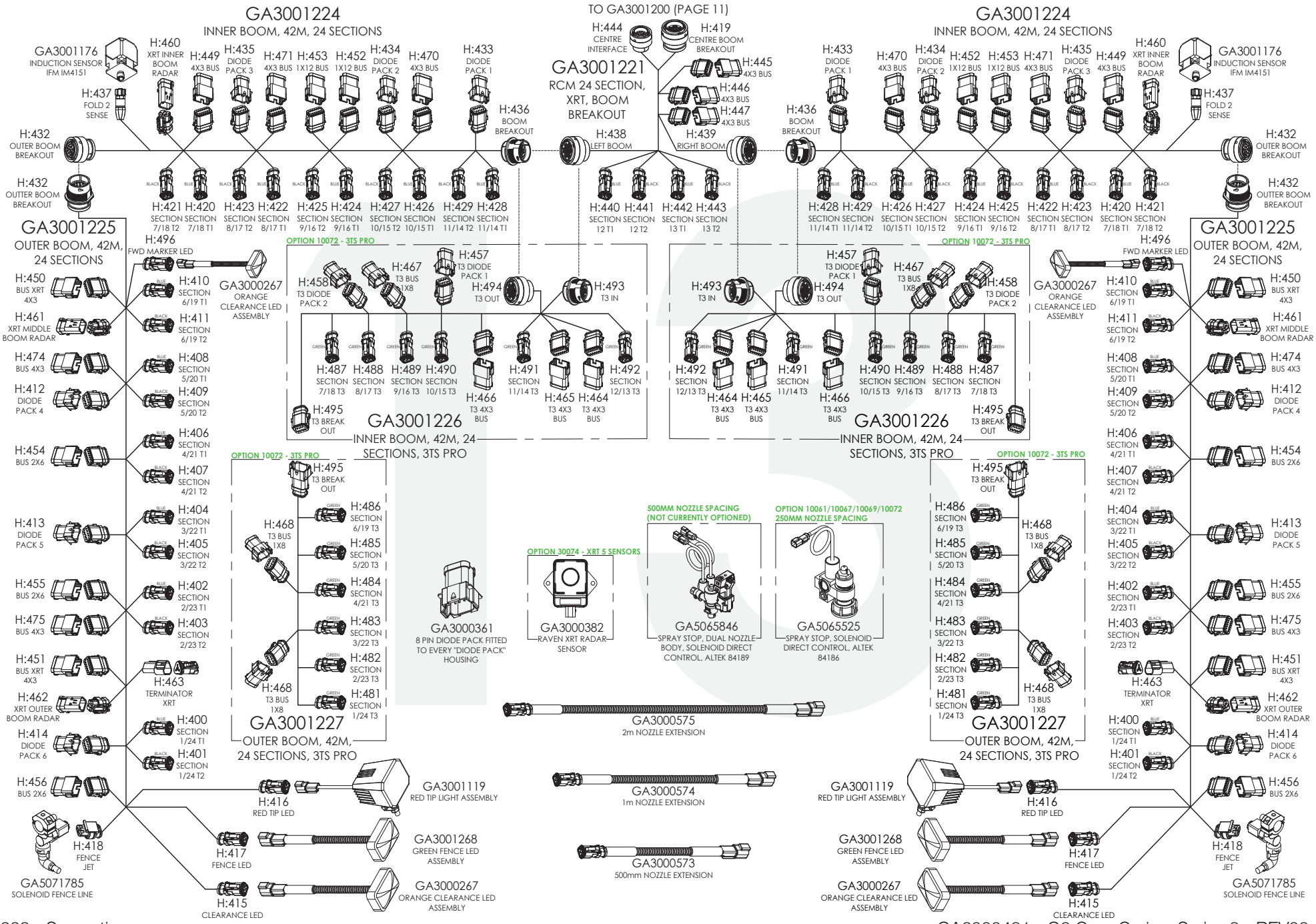

Electrical Schematic, Boom Breakout, 48mt

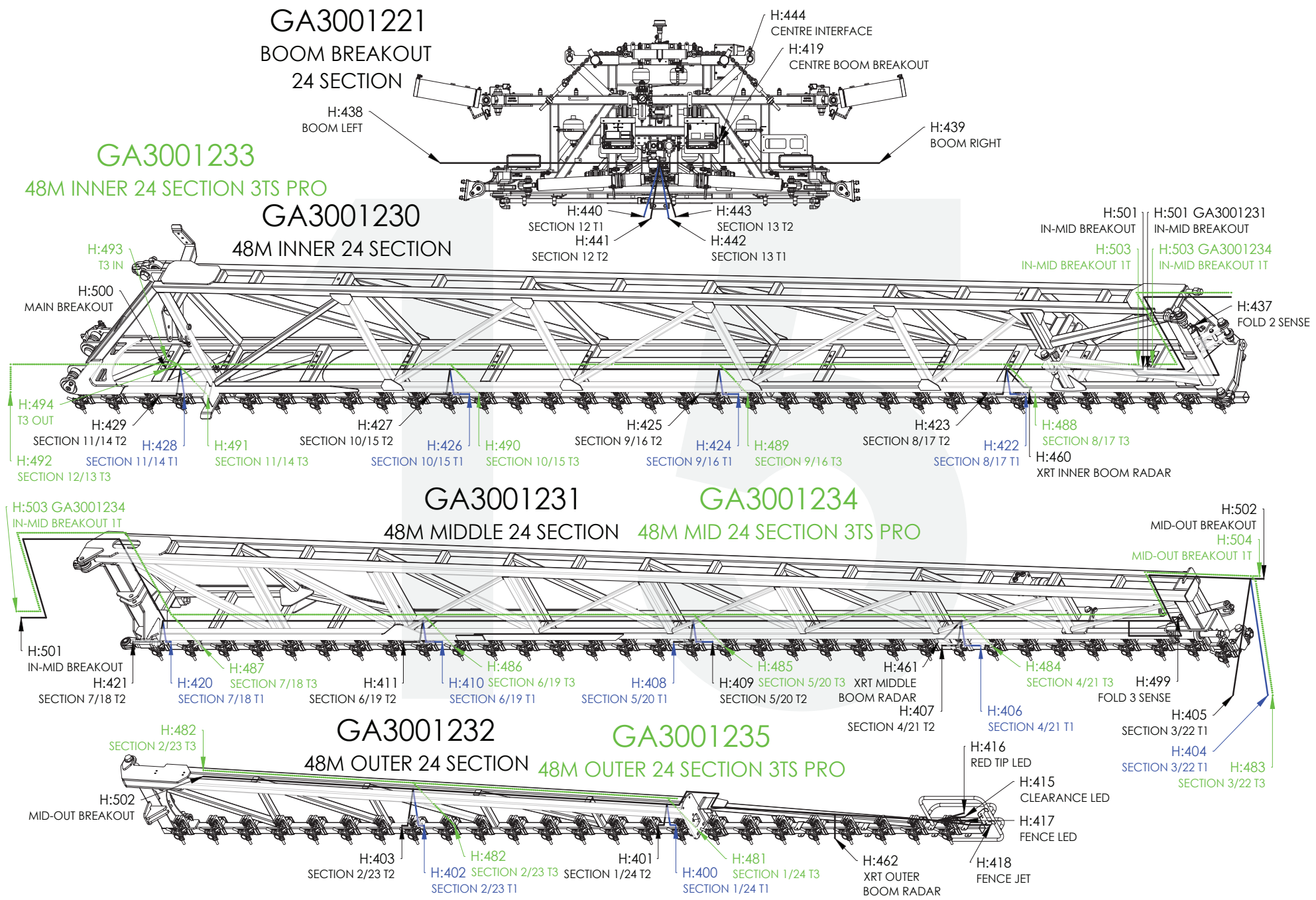

Electrical Schematic, Boom, 48mt

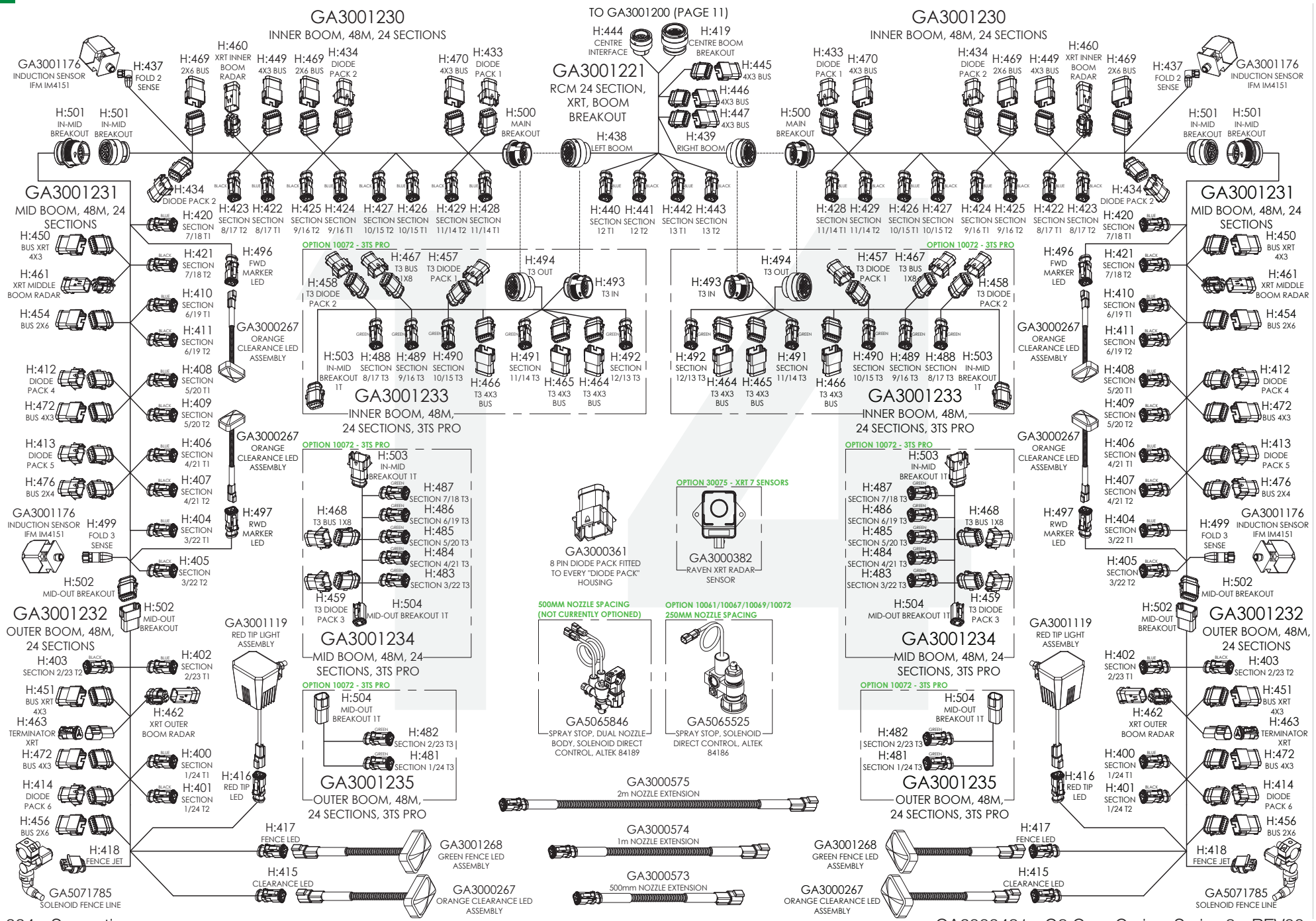

Electrical Schematic, Battery Kits

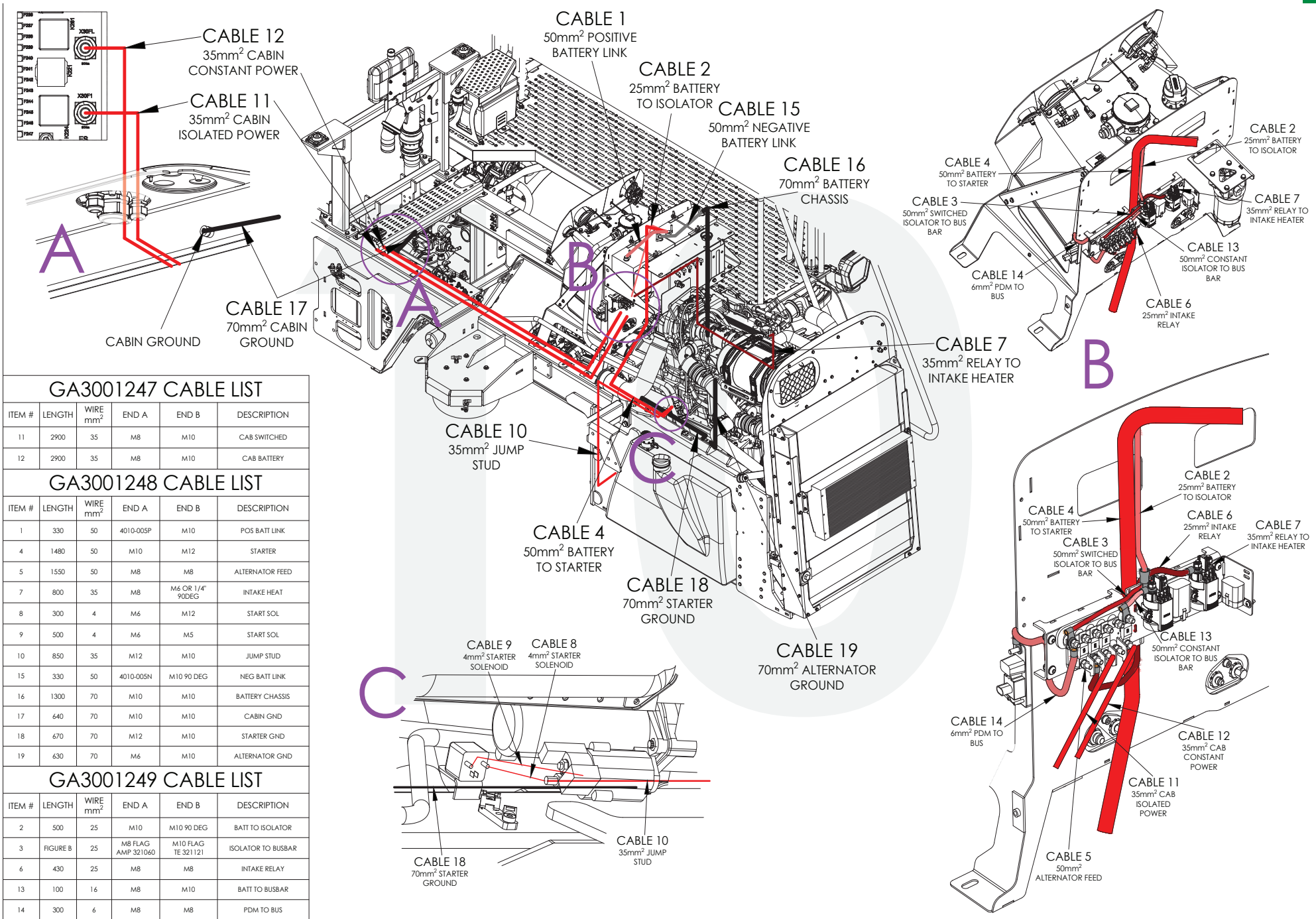

GA3001247 CABLE LIST

ITEM #	LENGTH	WIRE mm²	END A	END B	DESCRIPTION
11	2900	35	M8	M10	CAB SWITCHED
12	2900	35	M8	M10	CAB BATTERY

GA3001248 CABLE LIST

ITEM #	LENGTH	WIRE mm²	END A	END B	DESCRIPTION
1	330	50	4010-005P	M10	POS BATT LINK
4	1480	50	M10	M12	STARTER
5	1550	50	M8	M8	ALTERNATOR FEED
7	800	35	M8	M6 OR 1/4" 90DEG	INTAKE HEAT
8	300	4	M6	M12	START SOL
9	500	4	M6	M5	START SOL
10	850	35	M12	M10	JUMP STUD
15	330	50	4010-005N	M10 90 DEG	NEG BATT LINK
16	1300	70	M10	M10	BATTERY CHASSIS
17	640	70	M10	M10	CABIN GND
18	670	70	M12	M10	STARTER GND
19	630	70	M6	M10	ALTERNATOR GND

GA3001249 CABLE LIST

ITEM #	LENGTH	WIRE mm²	END A	END B	DESCRIPTION
2	500	25	M10	M10 90 DEG	BATT TO ISOLATOR
3	FIGURE B	25	M8 FLAG AMP 321060	M10 FLAG TE 321121	ISOLATOR TO BUSBAR
6	430	25	M8	M8	INTAKE RELAY
13	100	16	M8	M10	BATT TO BUSBAR
14	300	6	M8	M8	PDM TO BUS

Electrical Schematic, Bonnet Lights

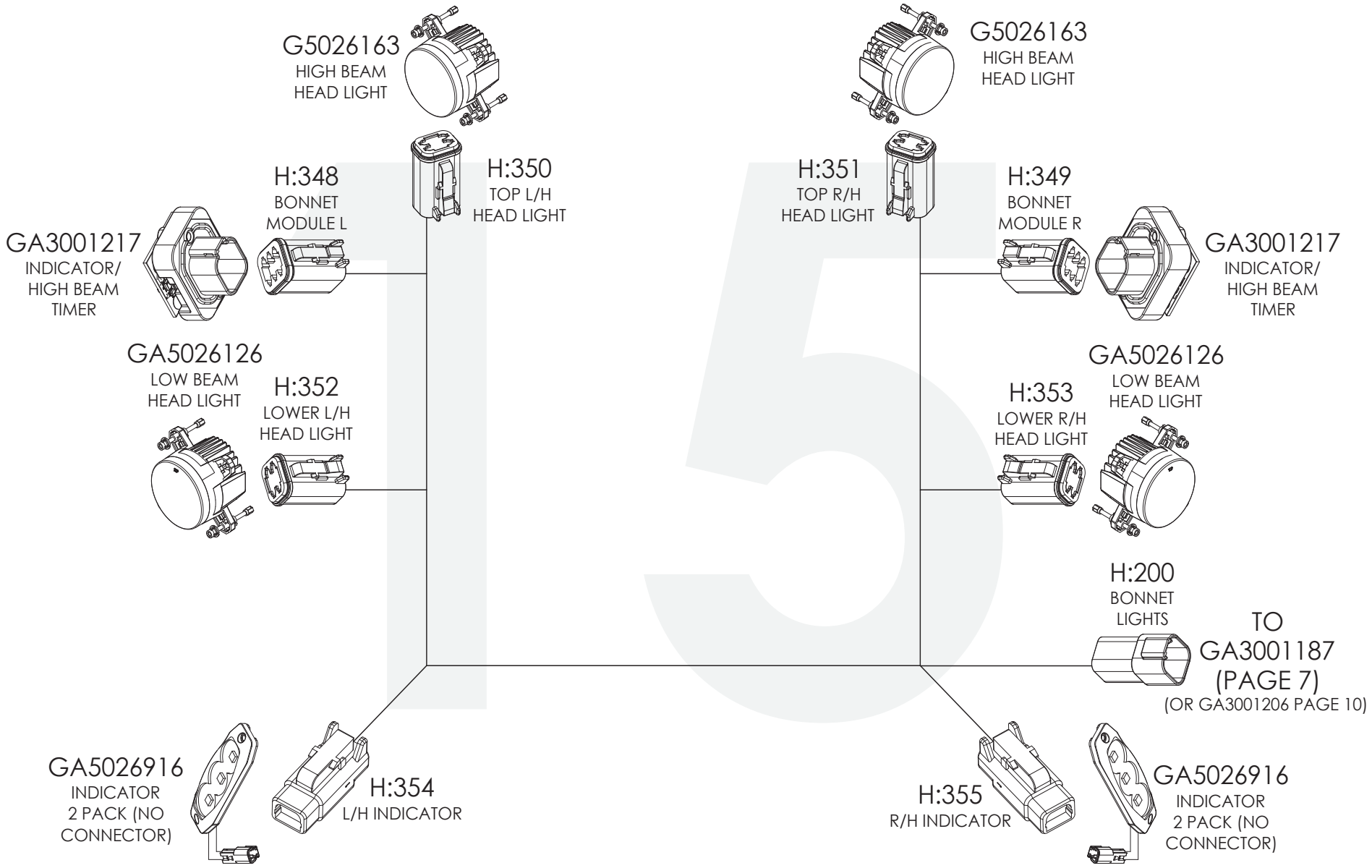

Electrical Schematic, Ethernet Layout

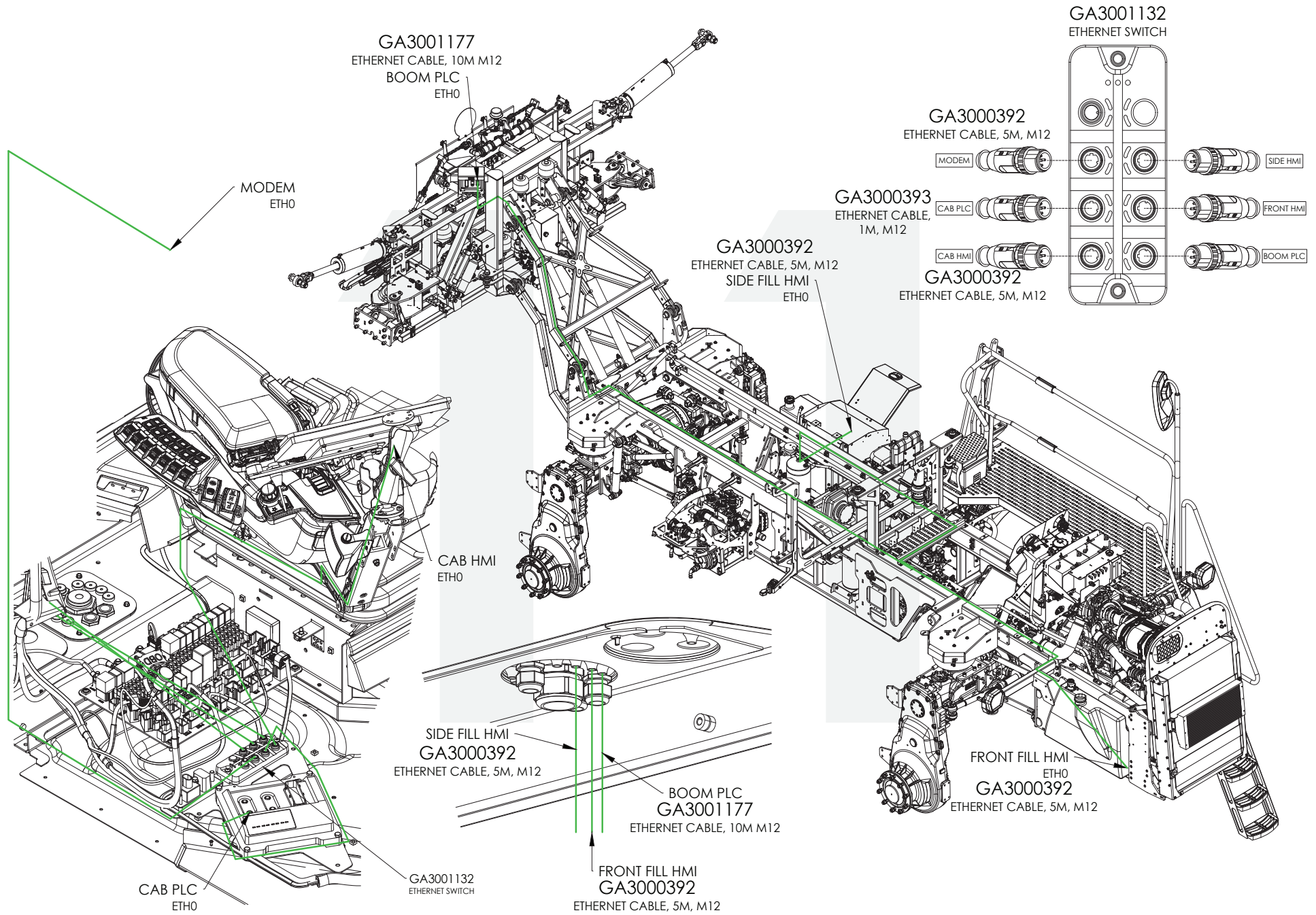

Electrical Schematic, Ethernet Switch

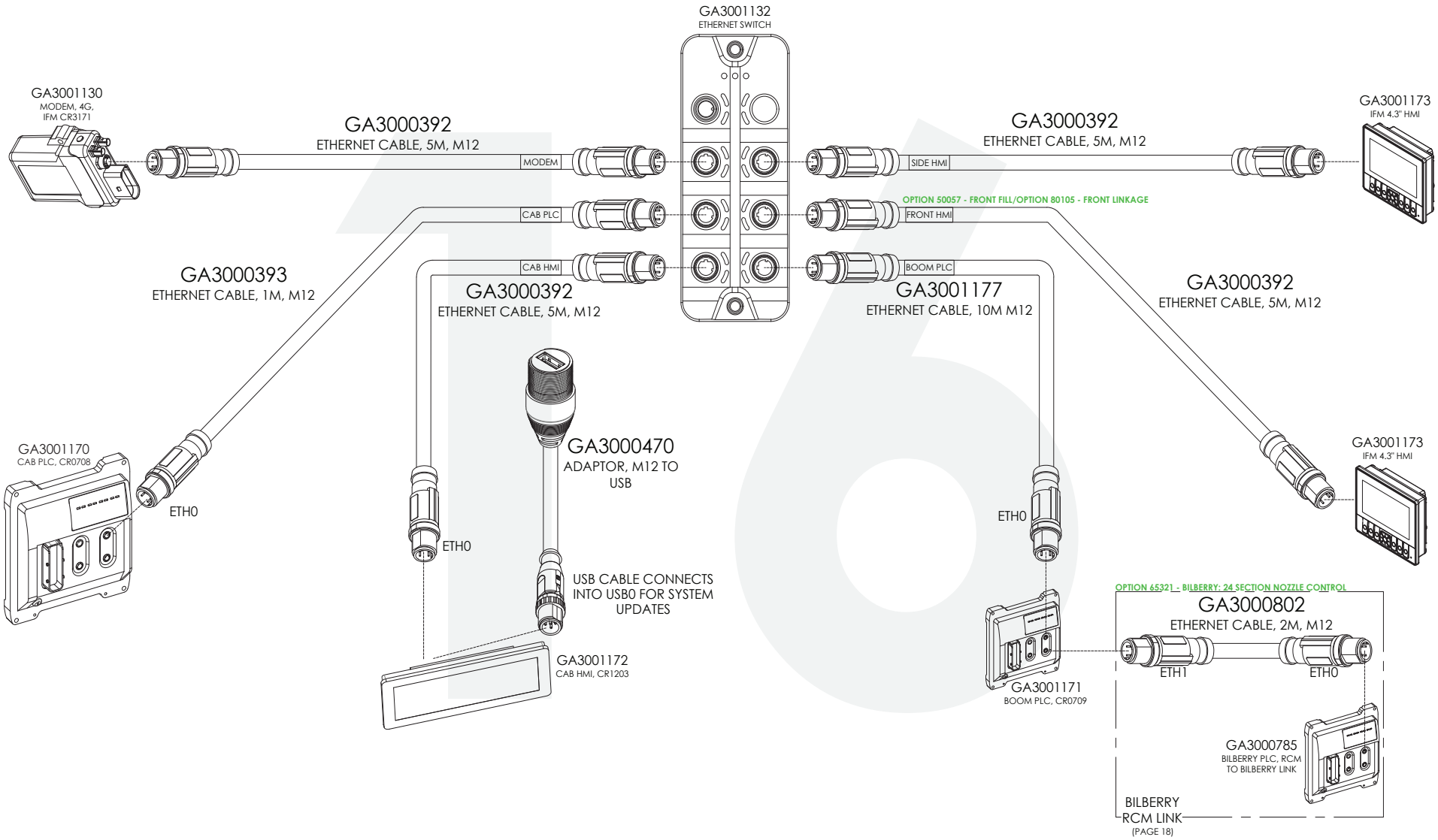

Electrical Schematic, Front Tank - Front Linkage

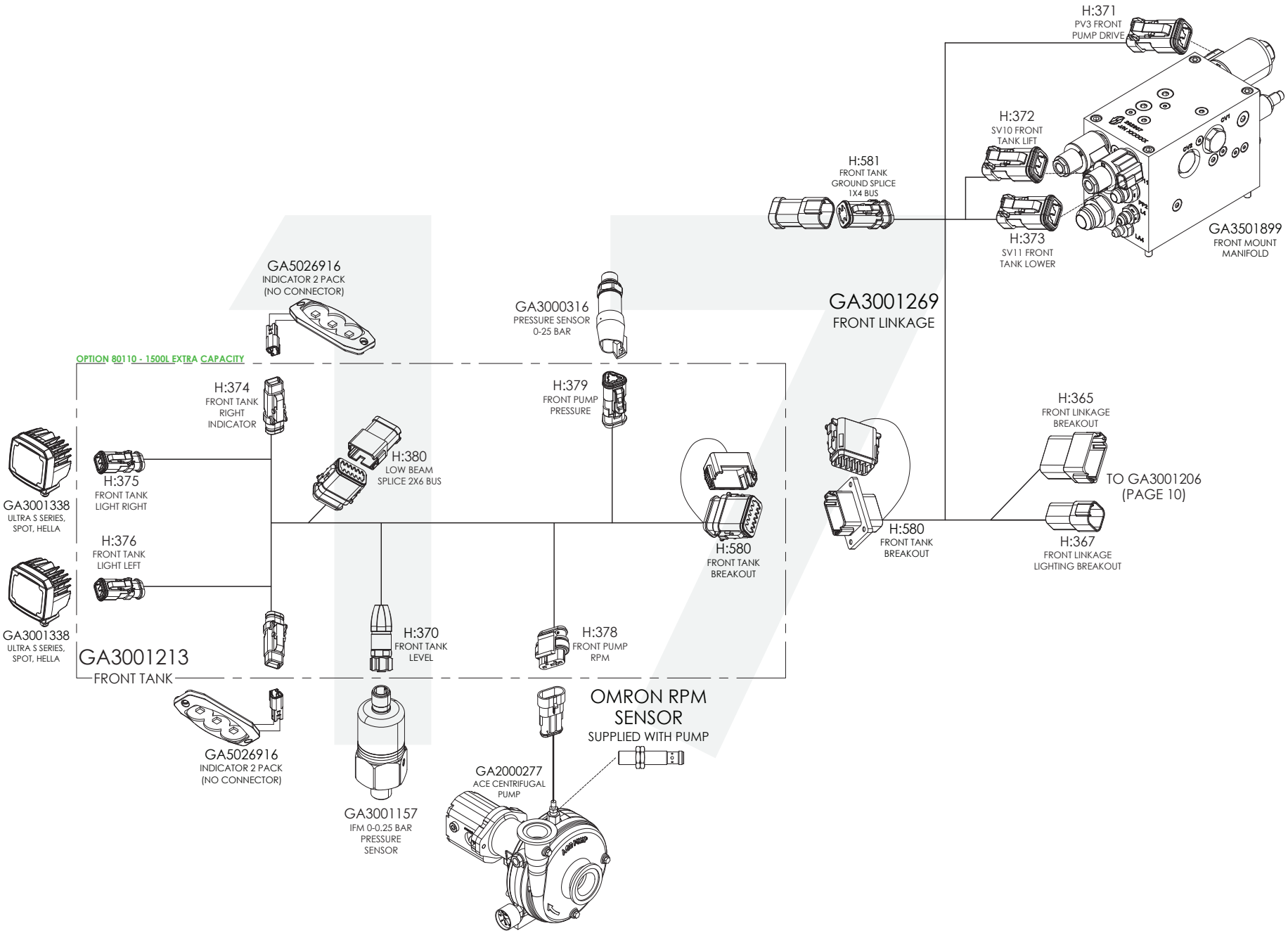

Electrical Schematic, Bilberry Integration

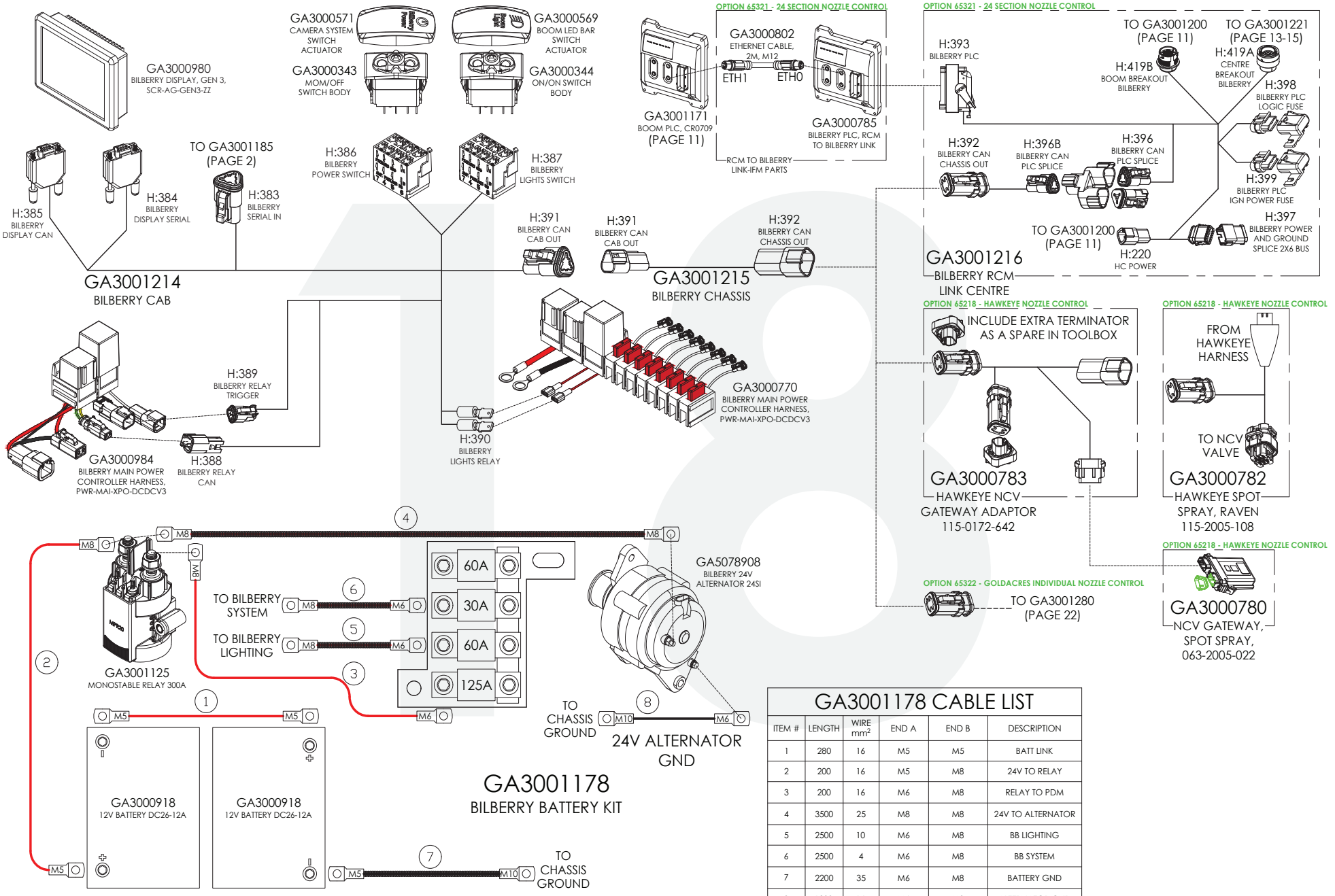

GA3001178 CABLE LIST

ITEM #	LENGTH	WIRE mm²	END A	END B	DESCRIPTION
1	280	16	M5	M5	BATT LINK
2	200	16	M5	M8	24V TO RELAY
3	200	16	M6	M8	RELAY TO PDM
4	3500	25	M8	M8	24V TO ALTERNATOR
5	2500	10	M6	M8	BB LIGHTING
6	2500	4	M6	M8	BB SYSTEM
7	2200	35	M6	M8	BATTERY GND
8	1200	16	M6	M8	ALTERNATOR GND

Electrical Schematic, Bilberry Cameras

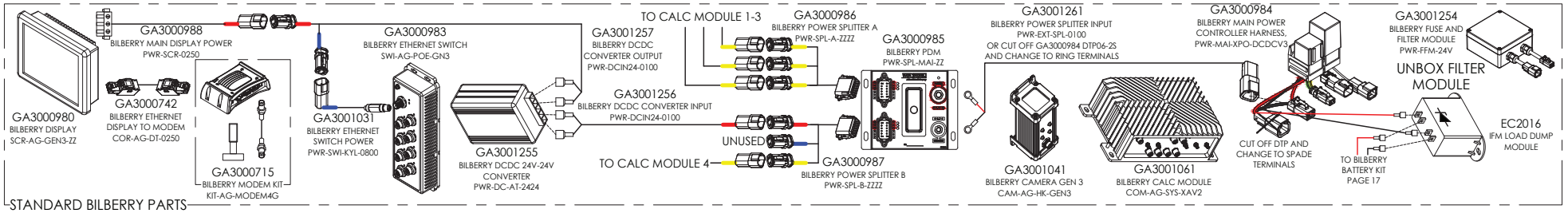

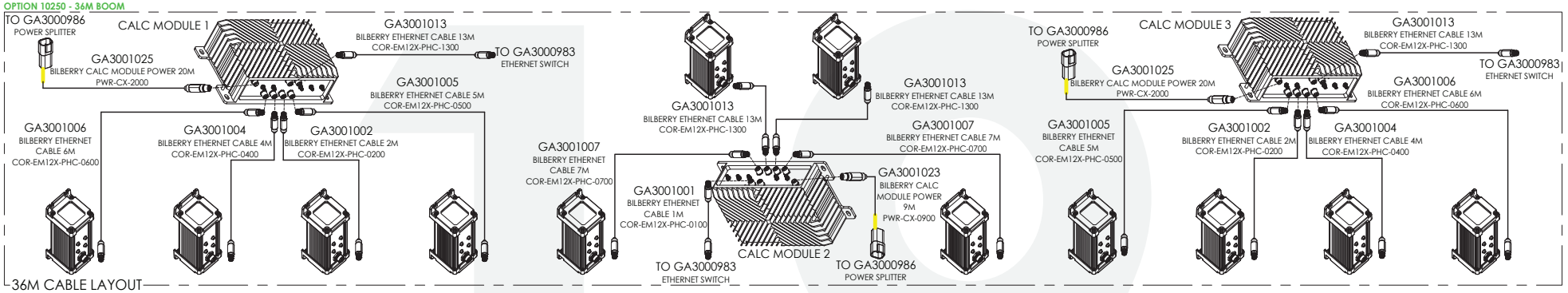

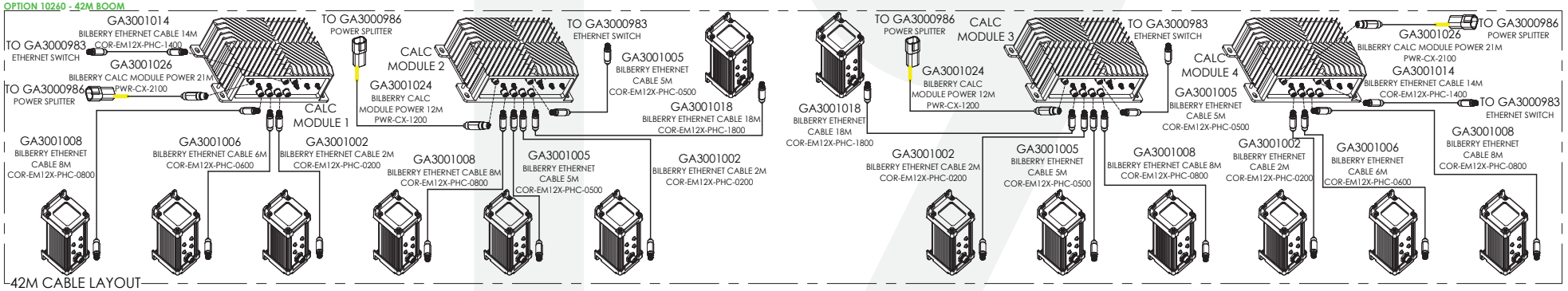

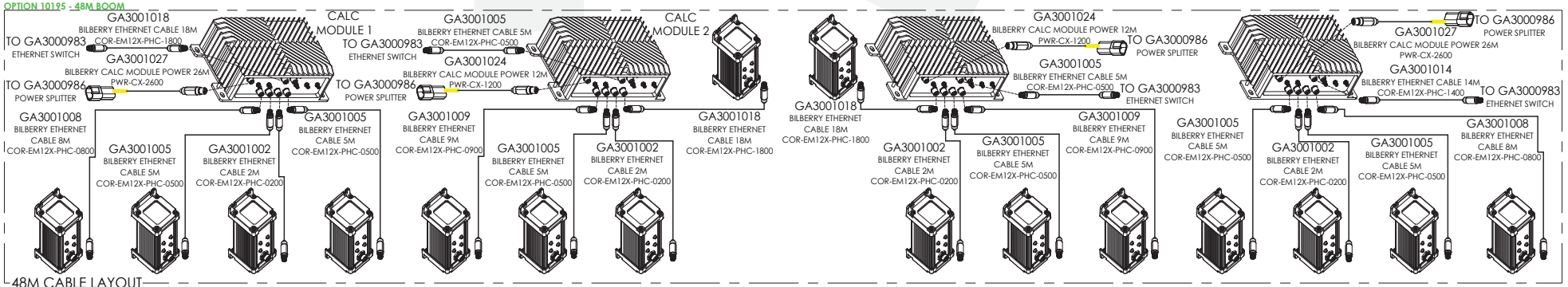

Electrical Schematic, Bilberry Lights

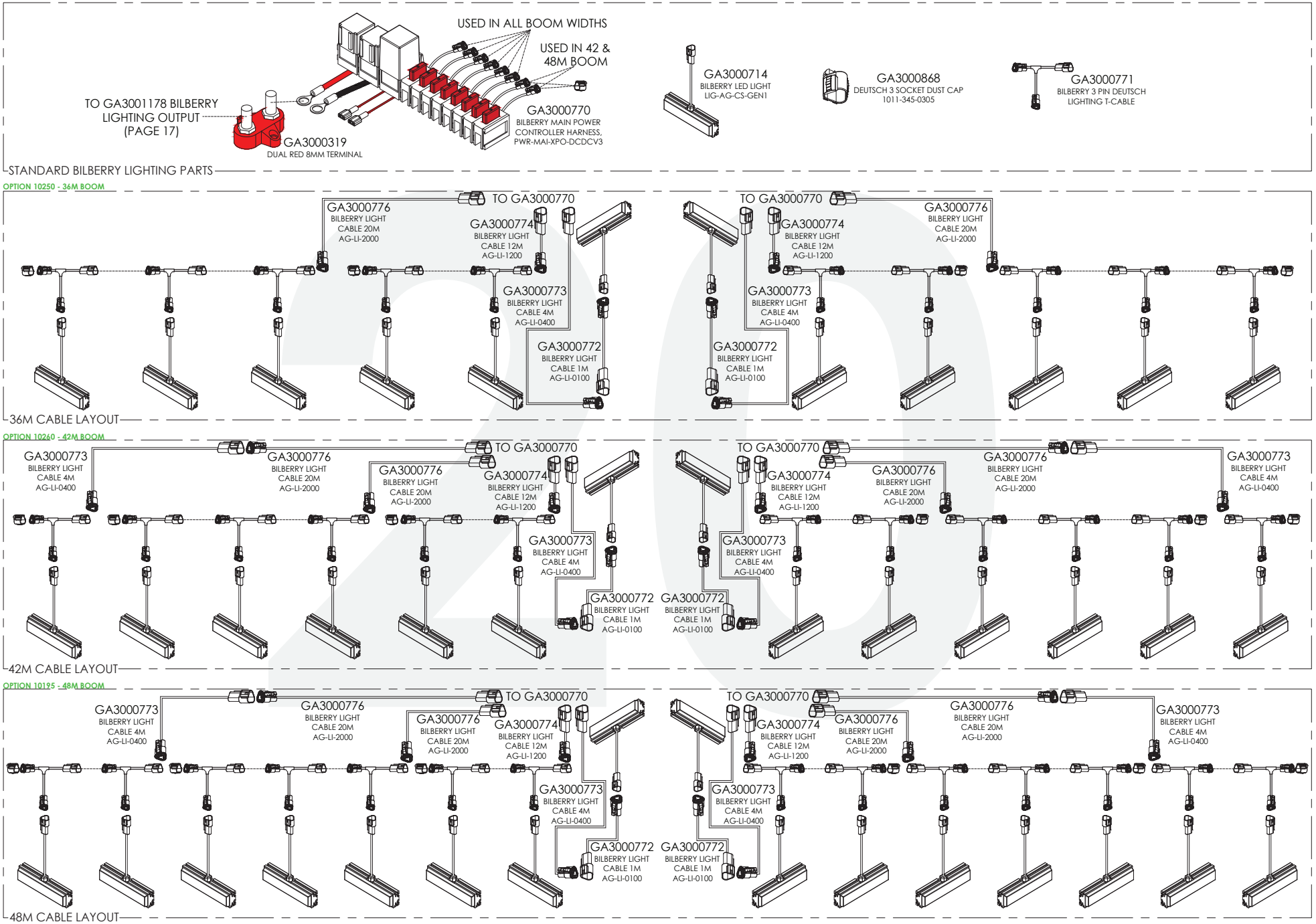

Electrical Schematic, Hawkeye, 250mm Spacing

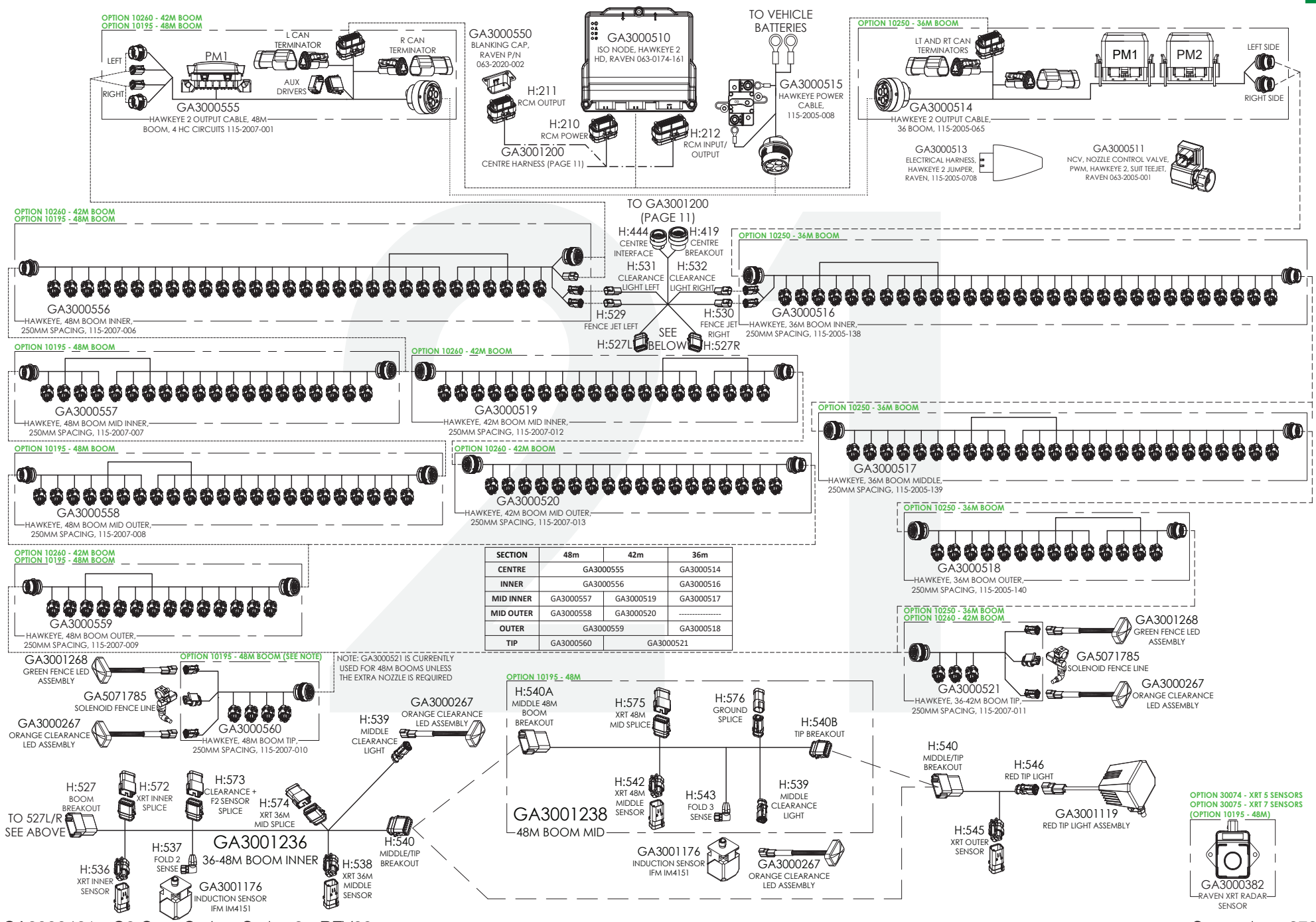

SECTION	48m	42m	36m
CENTRE	GA3000555		GA3000514
INNER	GA3000556		GA3000516
MID INNER	GA3000557	GA3000519	GA3000517
MID OUTER	GA3000558	GA3000520	----------
OUTER	GA3000559		GA3000518
TIP	GA3000560	GA3000521	

Electrical Schematic, Individual Nozzle Control (G.I.N.C)

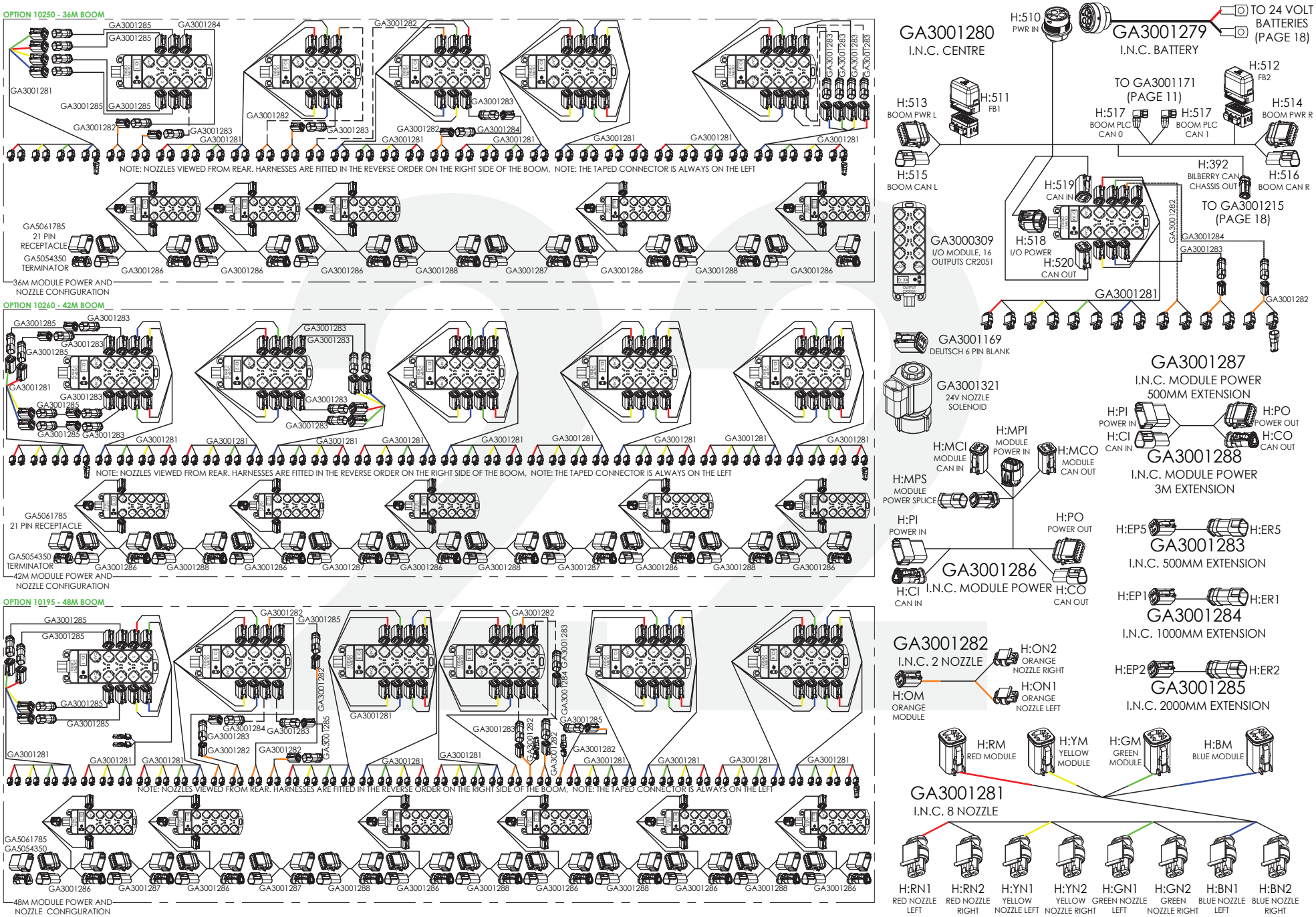

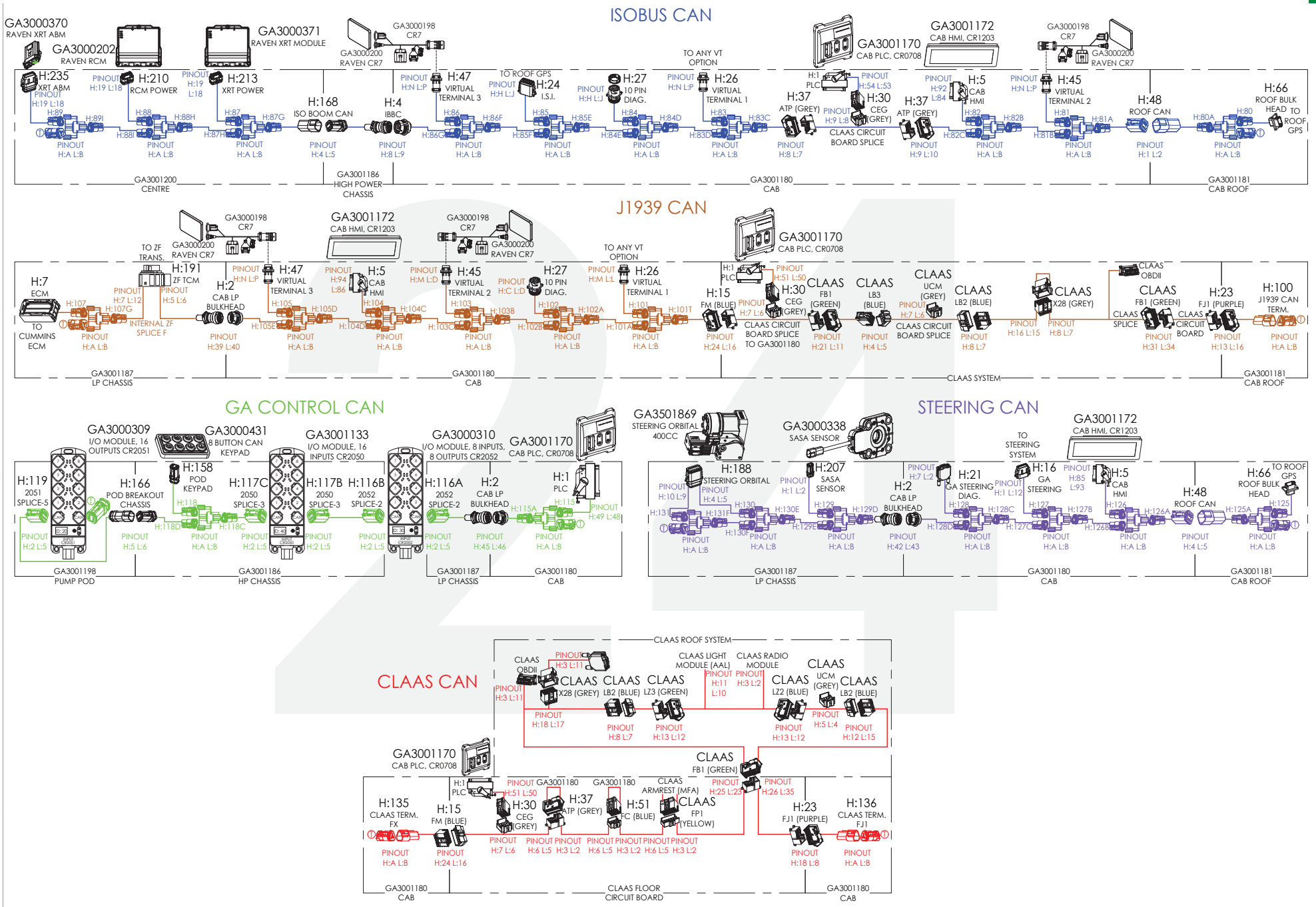
ISOBUS CAN
GA3000370
RAVEN XRT ABM
GA3000202
RAVEN RCM
GA3000371
RAVEN XRT MODULE
GA3000198
CR7
GA3000200
RAVEN CR7
H:235
XRT ABM
H:210
RCM POWER
H:213
XRT POWER
H:168
ISO BOOM CAN
H:4
IBBC
H:47
VIRTUAL TERMINAL 3
TO ROOF GPS
H:24
I.S.I.
H:27
10 PIN DIAG.
TO ANY VT OPTION
H:26
VIRTUAL TERMINAL 1
GA3001172
CAB HMI, CR1203
GA3001170
CAB PLC, CR0708
H:37
ATP (GREY)
H:30
CEG (GREY)
CLAAS CIRCUIT BOARD SPLICE
H:5
CAB HMI
H:45
VIRTUAL TERMINAL 2
H:48
ROOF CAN
H:66
ROOF BULK HEAD
TO ROOF GPS
GA3001200
CENTRE
GA3001186
HIGH POWER CHASSIS
GA3001180
CAB
GA3001181
CAB ROOF
J1939 CAN
TO ZF TRANS.
H:191
ZF TCM
H:7
ECM
TO CUMMINS ECM
INTERNAL ZF SPLICE F
H:2
CAB LP BULKHEAD
H:15
FM (BLUE)
CLAAS FB1 (GREEN)
CLAAS LB3 (BLUE)
CLAAS UCM (GREY)
CLAAS LB2 (BLUE)
CLAAS X28 (GREY)
CLAAS OBDII
CLAAS SPLICE
CLAAS FB1 (GREEN)
CLAAS CIRCUIT BOARD
H:23
FJ1 (PURPLE)
H:100
J1939 CAN TERM.
CLAAS CIRCUIT BOARD SPLICE TO GA3001180
GA3001187
LP CHASSIS
CLAAS SYSTEM
GA CONTROL CAN
GA3000309
I/O MODULE, 16 OUTPUTS CR2051
GA3000431
8 BUTTON CAN KEYPAD
GA3001133
I/O MODULE, 16 INPUTS CR2050
GA3000310
I/O MODULE, 8 INPUTS, 8 OUTPUTS CR2052
GA3001170
CAB PLC, CR0708
H:119
2051 SPLICE-5
H:166
POD BREAKOUT CHASSIS
H:158
POD KEYPAD
H:117C
2050 SPLICE-3
H:117B
2050 SPLICE-3
H:116B
2052 SPLICE-2
H:116A
2052 SPLICE-2
H:2
CAB LP BULKHEAD
H:1
PLC
GA3001198
PUMP POD
GA3001186
HP CHASSIS
GA3001187
LP CHASSIS
GA3001180
CAB
STEERING CAN
GA3501869
STEERING ORBITAL 400CC
GA3000338
SASA SENSOR
GA3001172
CAB HMI, CR1203
TO STEERING SYSTEM
H:188
STEERING ORBITAL
H:207
SASA SENSOR
H:2
CAB LP BULKHEAD
H:21
GA STEERING DIAG.
H:16
GA STEERING
H:5
CAB HMI
H:48
ROOF CAN
H:66
ROOF BULK HEAD
TO ROOF GPS
GA3001187
LP CHASSIS
GA3001180
CAB
GA3001181
CAB ROOF
CLAAS CAN
CLAAS ROOF SYSTEM
CLAAS OBDII
CLAAS X28 (GREY)
CLAAS LB2 (BLUE)
CLAAS LZ3 (GREEN)
CLAAS LIGHT MODULE (AAL)
CLAAS RADIO MODULE
CLAAS LZ2 (BLUE)
CLAAS UCM (GREY)
CLAAS LB2 (BLUE)
GA3001170
CAB PLC, CR0708
CLAAS FB1 (GREEN)
H:135
CLAAS TERM. FX
H:15
FM (BLUE)
H:30
CEG (GREY)
H:37
ATP (GREY)
H:51
FC (BLUE)
CLAAS ARMREST (MFA)
CLAAS FP1 (YELLOW)
H:23
FJ1 (PURPLE)
H:136
CLAAS TERM. FJ1
GA3001180
CAB
CLAAS FLOOR CIRCUIT BOARD
GA3001180
CAB

Electrical Schematic, CAN Layout, Raven XRT, Bilberry, (G.I.N.C)

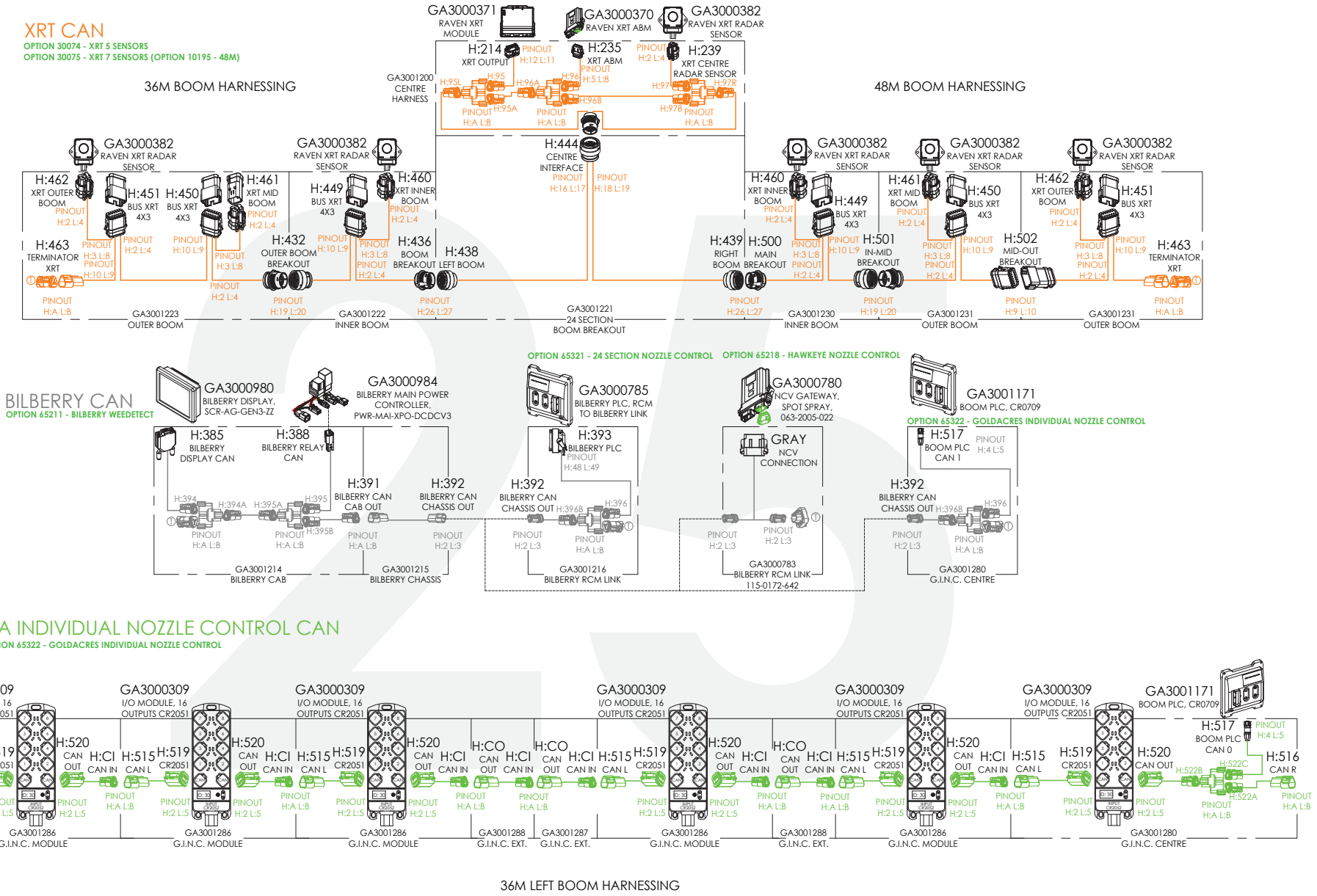

24 - Sprayer Options

Sprayer Options Index

CROP CRUISER G8 S3	
Option	DESCRIPTION
10061	33TS RAPID FIRE AND RAPID FLOW 250MM SPACING (STAGGERED)
10067	3TS RAPID FIRE WITH RAPID FLOW 250MM SPACING (STAGGERED) WITH TRIJETS ON TIER 1
10069	3TS RAPID FIRE WITH RAPID FLOW 250MM SPACING (STAGGERED) WITH TRIJETS ON TIER 1 & 2
10072	3TS PRO (MUST SELECT RCM IF NOT STANDARD)
10073	HAWKEYE 2ND GENERATION PWM SYSTEM - 250MM SPACING
20005	NOZZLE TYPE TO BE FITTED - OTHER
20006	NOZZLE TYPE - TEEJET TTI (SUITABLE FOR HAWKEYE 2)
20007	NOZZLE TYPE FITTED - TEEJET AIXR
20008	NOZZLE TYPE FITTED - TEEJET AI
20032	NOZZLE SIZE (015) FOR TIER 1
20033	NOZZLE SIZE (02) FOR TIER 1
20034	NOZZLE SIZE (025) FOR TIER 1
20035	NOZZLE SIZE (03) FOR TIER 1
20036	NOZZLE SIZE (04) FOR TIER 1
20037	NOZZLE SIZE (OTHER) FOR TIER 1 - (SPECIFIED)
20038	NOZZLE SIZE (02) FOR TIER 2
20039	NOZZLE SIZE (025) FOR TIER 2
20040	NOZZLE SIZE (03) FOR TIER 2
20041	NOZZLE SIZE (04) FOR TIER 2
20042	NOZZLE SIZE (OTHER) FOR TIER 2 (SPECIFIED)
20045	NOZZLE SIZE (015) FOR TIER 3
20046	NOZZLE SIZE (02) FOR TIER 3
20047	NOZZLE SIZE (025) FOR TIER 3
20048	NOZZLE SIZE (OTHER) FOR TIER 3
20062	REMOTE GREASE NIPPLE BANK
20080	AUTO GREASER - GROENEVELD BEKA EP-1
20084	HEAVY GREASE NLGI 2
20085	LIGHT GREASE NLGI 0
30074	XRT AUTO HEIGHT CONTROLLER WITH 5 SENSORS
30075	XRT AUTO HEIGHT CONTROLLER WITH 7 SENSORS
40014	VF480/80R50 WHITE RIMS
40015	VF480/80R50 BLACK RIMS
40016	VF580/85R42 WHITE RIMS
40029	TRANSPORT WHEELS AND TYRES (11.2R44)
40068	FOR WHEEL DRIVE (4WD) WITH FIXED WHEEL TRACK SET TO 2970MM

CROP CRUISER G8 S3	
Option	DESCRIPTION
40081	NO TOW BAR (MUST BE SELECTED IF ADJUSTABLE AXLE OPTIONED
40089	TOW HITCH SUIT SERIES 3, FLAT TONGUE
40115	CROP DIVIDERS FOR FRONT WHEELDS
40120	CROP DIVIDERS FOR REAR WHEELS
50057	3" SEPARATE FRONT FILL WITH G-HUB DISPLAY
60018	RAVEN CR7 ISO BUS VT
60102	NO GUIDANCE
60103	TRIMBLE ADAPTION KIT
60111	JOHN DEERE ADAPTION KIT
65210	NO SELECTIVE SPOT SPRAY FITTED
65211	GOLDACRES WEEDETECT BILBERRY
65212	GOLDACRES WEEDETECT NIR
65214	SELECTIVE SPOT SPRAY READY, DEALER SUPPLIED & FITTED
65215	PLUMBING STANDARD
65216	PLUMBING PLUS
65217	PLUMBING DUAL LINES
65218	NOZZLE CONTROL WITH HAWKEYE
65290	GREEN ON BROWN ALGORITHM UNLIMITED USE 36M BOOM
65292	GREEN ON BROWN ALGORITHM UNLIMITED USE 42M BOOM
65293	GREEN ON BROWN ALGORITHM UNLIMITED USE 48M BOOM
65295	GREEN ON GREEN ALGORITHM UNLIMITED USE 36M BOOM
65296	GREEN ON GREEN ALGORITHM UNLIMITED USE 42M BOOM
65297	GREEN ON GREEN ALGORITHM UNLIMITED USE 48M BOOM
65321	NOZZLE CONTROL WITH 24 SECTION
65322	NOZZLE CONTROL WITH INDIVIDUAL NOZZLES
65990	NOZZLE TYPE TO BE FITTED TO SPOT SPRAY LINE - TEEJET TP 40 DEGREE
65991	NOZZLE TYPE TO BE FITTED TO SPOT SPRAY LINE - ASJ CFLD 40 DEGREE
65992	NOZZLE TYPE TO BE FITTED TO SPOT SPRAY LINE - OTHER
66002	NOZZLE SIZE (03) FOR SPOT SPRAY LINE
66003	NOZZLE SIZE (04) FOR SPOT SPRAY LINE
66004	NOZZLE SIZE (OTHER) FOR SPOT SPRAY LINE
70013	CENTRIFUGAL PUMP - ACE 650 MAX SERIES
80105	FRONT LINKAGE SP'S ONLY
80110	1500L FRONT MOUNT TANK ADDITIONAL CAPACITY
90070	RIGHT HAND ACCES PLATFORM

Goldacres Terms & Conditions of Sale & Warranty

1. These terms and conditions apply to all goods and/or services supplied by us to you. You are agreeing to them by placing an order with us.
2. Unless you have a previously approved account with us you must pay us the purchase price for the goods and/or services we supply to you, together with any other applicable fees or charges immediately on delivery or collection of the goods, or if ordered online or by phone on the placement of your order. All repairs or servicing must be paid for before we will release the goods to you. If you do have an
3. Time is of the essence for all payments required under these conditions.

Unless specifically stated otherwise, all prices which we quote or est4. imate to you are inclusive of GST for goods supplied within Australia and exclusive of GST for goods exported outside of Australia. If GST is payable on a Taxable Supply made by us to you, then you must also pay the amount of GST payable in respect of that Taxable Supply as an additional payment.

5. You must pay interest on any amounts not paid by the due date at a rate 2% higher than the rate for the time being fixed under section 2 of the Penalty Interest Rates Act 1983 (Victoria) as at the date the amount became due.
6. Property in goods supplied (and in any goods which we may have previously supplied to you) remains with us until we have been paid in full for all amounts you owe us including payment for the goods and any applicable interest, fees and charges, and until then:

a. you hold the goods only as a bailee and have no right to claim any other interest in the goods, including any security for any liquidated or unliquidated debt or obligation that we owe you, or any lien over the goods;

b. we may enter and recover possession of the goods from any site owned, possessed or controlled by you and you

c. you must not deliver or on-supply any of the goods (nor any document of title to them) to any person, but if you do then you hold the proceeds of the on-supply of the goods on trust for us and must pay the amount to us immediately when received;

d. you must not allow any person to have or acquire any security interest in the goods nor create any absolute or defeasible interest in the goods in relation to any third party except as we may authorise;

e. you must insure the goods for their full insurable or replaceable value (whichever is higher) and provide us with details of the insurance if we request it;

f. you must not remove, deface or obliterate any identifying mark or number on any of the goods;

g. your right to possession of the goods ceases if we recall or recover the goods, or if you become insolvent, you enter into voluntary or involuntary administration or receivership, or a petition is filed for your bankruptcy or winding up.

You further agree:

h. that the retention of title under this clause is a security interest within the meaning of the Personal Property Securities Act 2009 (Cth) ("PPSA");

i. to grant us a purchase money security interest (as that term is defined in the PPSA) in relation to the goods;

j. to contract out of all of your existing and future rights under the provisions referred to in paragraphs (a) through to (r) of section 115(1) of the PPSA, to the full extent permitted;

k. to sign any documents or do any things which we may reasonably require to enable us to register a financing statement or financing change statement on the register (as defined in the PPSA);

l. to pay any costs we incur in registering and maintaining a financing statement (including registering a financing change statement) and enforcing the security interest created under these terms and conditions.

7. Risk in the goods passes to you upon their delivery to or collection by you.
8. You hereby indemnify us and our employees, directors, contractors and agents against, and release us and them from, any loss (including reasonable legal costs and expenses) or liability incurred by us and/or them arising from any claim, demand, suit, action or proceeding by any person against us and/or them where such loss or liability arose directly or indirectly from or in connection with any breach of these terms and conditions or from use of the goods and/or services unless such liability is directly caused by the negligence or default of the person indemnified.
9. You, or anyone on your behalf must not, and you must take steps to ensure that your employees, agents and contractors do not, nor assist anyone else to:

a. copy, memorise, reproduce, misappropriate or reverse engineer the whole or any part of the goods

b. challenge, contest or oppose any of our intellectual property rights

c. use any name or logo associated with the goods other than as we authorise you

d. divulge our confidential information to any person or use it for your own benefit except as we have expressly authorised or as required by law.

10. Any specifications, drawings, details, statistics or performance figures we may have given you about the goods and/or services are only estimates and any deviation does not entitle you to make any claim against us. Any sample is provided only to indicate the general nature of the product, and we do not warrant that goods supplied will exactly correspond with any sample or with any previous or future goods supplied.
11. Except as stated in any separate written warranty we may provide you with the goods or a quote, under no circumstances will we have any liability to replace or repair defects in the goods where:

a. the defects have not arisen solely from faulty materials supplied by us or faulty workmanship by us;

b. the goods have received maltreatment, inattention or interference or have been used, applied, packaged or stored other than in accordance with our instructions and recommendations;

c. products not manufactured by or approved by us have been used with the goods.

12. Except as provided in these conditions, all express and implied warranties guarantees and conditions under statute or general law as to merchantability, description, quality, suitability or fitness of the goods for any purpose or as to design, assembly, installation, materials or workmanship or otherwise are expressly excluded. We are not liable for physical or financial injury, loss or damage or for consequential loss or damage of any kind arising out of the application, supply, layout, assembly, installation or operation of the goods or arising out of our negligence or in any way whatsoever. The exceptions in clause (12) extend to any Third Party Accessories installed in the goods.
13. If any condition or warranty is implied into this agreement under the Competition and Consumer Act (2010) (Cth) or any equivalent State or Territory legislation and cannot be excluded, then our liability is limited to one or more of the following:

a. in the case of goods, the replacement of the goods or the supply of equivalent goods, the repair of the goods, the payment of the cost of replacing the goods or of acquiring equivalent goods, or the payment of the cost of having the goods repaired;

b. in the case of services, the supplying of the services again, or the payment of the cost of having the services supplied again.

14. Nothing in these conditions is to be read or applied so as to exclude, restrict or modify or have the effect of excluding, restricting or modifying any condition, warranty, guarantee, right or remedy implied by law and which by law cannot be excluded, restricted or modified.
15. Any quotes on pricing provided by us are consistent with the prevailing market at the time of quotation, including considerations as to rates of freight, insurance, customs, duties, exchange, shipping expenses, sorting and stacking charges, cartage, cost of materials and other charges affecting the cost of production prevailing at that date.
16. Any increases in the quote price occurring either before or during the agreement, shall be to your account.
17. Our quotations are open for acceptance within the period stated therein. If no period is stated, our quotations are open for acceptance for (14) fourteen days from the date the quote was given.
18. All prices listed in our quotations and product catalogue are subject to change or alteration without notice.
19. Unless we otherwise agree in writing we accept credit card or eftpos payments only.
20. We do not accept payment by cheque unless we have previously agreed in writing to do so.
21. Any goods you deliver to us must be free of any chemicals. If you deliver goods that are not free of chemicals, you must pay any costs incurred by us including the cost of our own staff in removing and disposing of the chemicals and cleaning the goods.
22. If after 28 days of notifying you that your goods are ready for delivery we have received no communication from you, we retain any rights under the Australian Consumer Law and Fair Trading Act 2012 (Vic) to sell the goods to recover the value of any outstanding debt you may owe us.
23. You are responsible for backing up any Data that you, or your agent, may install on the goods. If the Data is wiped, corrupted, or lost, we are not liable (whether we are negligent or otherwise) for any damage that may result from that Data being wiped, corrupted or lost.
24. Before you use any of our goods you must check, and if necessary adjust, all settings to ensure the goods are properly calibrated.
25. We are not liable to you for any failure by us to perform any of our obligations under this agreement caused by an impediment or circumstance beyond our control.
26. In these terms and conditions,

a. "we", "us" or "our" means the entity within the Goldacres Group from which you purchase goods and/or services, including, but not limited to:

i. Goldacres Trading Pty Ltd ACN 061 306 732; and

ii. Goldacres Sprayer Centre Pty Ltd ACN 639 231 520

b. "you" or "your" means the individual or company that purchases goods and/or services from us.

c. "our confidential information" includes all of our secrets, ideas, know how, concepts, information, copyright, computer programs, manuals, precedents whether in writing or in any other form and all other information relating to us or our affairs, businesses, sales, marketing or promotional information, and any information about the ingredients, mix, make-up or manufacturing process of the goods

d. "goods" includes any associated services except where the context does not permit.

e. "Third Party Accessories" includes anything incorporated in the goods that is manufactured and supplied to us by a third party.

f. "Data" includes any information capable of being installed and or stored on an electronic device.

27. Used Goods- For any second hand or used Goods sold, except to the extent that a manufacturer's warranty applies.

a. all used or second-hand Goods are sold on an "as is where is" basis with all existing or future inadequacies, faults or defects, if any, and whether they are known or unknown.

b. The Seller does not warrant the second hand or used Goods are fit for any purpose or free from any defects and does not warrant the accuracy of any service or repair history, meter or hour readings and to the extent permitted by law the Buyer releases the Seller from all liability arising or connection with any defects faults or inadequacies in the Goods and any warranty under these terms or at law excludes liability for costs other than what is reasonable or customary to rectify and does not include costs for time or labour, testing, travel or freight or packaging and handling.

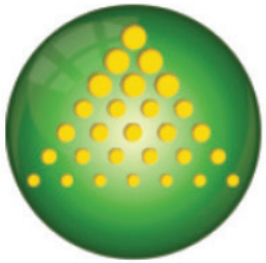

GOLDACRES

www.goldacres.com.au