Prairie Pro

Part's Manual MY15

GOLDACRES

Australia's World Class Sprayers

For further information about any of the products shown please visit - www.goldacres.com.au.

© Goldacres Trading 2016
This publication and all designs are copyright.

No part, products or designs may be reproduced by any process except in accordance with the Copyright act 1968.

All information in this operator's manual is based on the latest product information available at the time of printing. The policy of Goldacres is one of continuous improvement and as such, Goldacres reserve the right to alter any specifications and designs without notice and without incurring any obligation regarding such changes.

No part of this manual may be reproduced without written permission from Goldacres. All photographs and technical information remain the property of Goldacres.

Goldacres Trading Pty Ltd
3 Morang Crescent
Mitchell Park Vic 3355

Ph: 03 5342 6399
Fax: 03 5342 6308

Revision number: 1
13/09/2016

Part #: GA8700326

GOLDACRES - RESELLER TERMS AND CONDITIONS OF SALE

Goldacres Goods are only available for purchase upon the terms and conditions set out below.

Interpretation

1. In terms and conditions:

(1) "Goldacres" means Goldacres Trading Pty. Ltd. A.C.N. 061 306 732 trading as Goldacres Agricultural Equipment (its successors and assigns) which is the seller of the Goods;
(2) "Purchaser" means the purchaser of the Goods;
(3) "Goods" means the products and, if any, the services sold or provided by Goldacres to the Purchaser;
(4) "GST Act" and "GST" are given the meanings referred to in a New Tax System (Goods and Services Tax) Act 1999.
(5) "PPSA" means the Personal Property Securities Act 2009 (Clth) (as amended);
(6) Nothing in these terms and conditions shall be read or applied so as to exclude, restrict or modify or have the effect of excluding, restricting or modifying, any condition, warranty, guarantee, right or remedy implied by law (including the Competition and Consumer Act 2010) and which by law cannot be excluded, restricted or modified.

General

2. (1) The Goods and all other products or services provided by Goldacres are provided subject to these terms and conditions. These terms and conditions and any terms and conditions incorporated herein by virtue of clause 3 hereto shall prevail over all other terms and conditions of the Purchaser or otherwise to the extent of any inconsistency.
(2) These terms and conditions may not be modified or amended without the expressed written consent of Goldacres endorsed by the Managing Director of Goldacres Trading P/L.

Additional Terms and Conditions

3. From time to time Goldacres may provide additional or extended warranties in respect of certain goods and/or services. Where such additional or extended warranties are provided to a Purchaser in writing they will be incorporated into these terms and conditions provided that in the event of any inconsistency between these terms and conditions and the terms of any additional or extended warranty, the provisions of the additional or extended warranty shall prevail.

Goldacres quotations.

4. Unless previously withdrawn, Goldacres quotations are open for acceptance within the period stated therein or, when no period is stated, with 14 days only of the quotation date. Goldacres reserves the right to refuse any order based on any quotation within 7 days of receipt of the order.

Packing

5. The cost of any special packing and packing materials used in relation to the Goods shall be at the Purchaser's expense notwithstanding that such cost may have been omitted from any quotation.

Shortage

6. The Purchaser waives any claim for shortage of any Goods delivered if a claim in respect thereof has not been lodged with Goldacres within (7) seven days from the date of receipt of the Goods by the Purchaser.

Specifications, etc: Catalogues, etc: Quantities

7. All specifications, (including but not limited to: drawings, particulars of weights, volumes, capacities, dimensions, load factors) are approximate only and any deviation shall not be taken to vitiate any contract with Goldacres or form any claim against Goldacres. The descriptions, illustrations, and performances contained in catalogues, price lists and other advertising matter do not form part of the contract of sale of the Goods. Where specifications, drawings or other particulars are supplied by the Purchaser, Goldacres' price is made on estimates of quantities required. Should there be any adjustments in quantities above or below the quantities estimated by Goldacres and set out in a quotation, then any such increase or decrease shall be adjusted on a unit rate basis according to unit prices set out in the quotation.

Performance, Capacities, Chemicals, Liquids, Application Methods, Environmental Effects

8. Any performance, volumes, and/or capacity figures given by Goldacres are estimates only. Goldacres shall be under no liability for damages for failure to obtain such figures unless specifically guaranteed in writing and any such written guarantee shall be subject to the recognised tolerances applicable to such figures. The suitability of chemicals and other liquids for any application and the application methods and the environmental effects shall be the sole decision and responsibility of the Purchaser and the user of the Goods. Goldacres gives no warranty as to the suitability of any chemicals or other liquids for any application, nor the application methods nor the environmental effects, which may result from the use of the Goods. Goldacres shall be under no liability for damages arising out of the use of any chemicals, liquids, or mixtures in the Goods nor for any application, nor for the application methods nor for the environmental effects, which may result from the use of the Goods.

Delivery/Service Times

9. The delivery times and service times made known to the Purchaser are estimates only and Goldacres shall not be liable for late delivery, non-delivery or delay and under no circumstances shall Goldacres be liable for any loss, damage or delay occasioned by the Purchaser or its customers arising from the late or non-delivery or late installation of the Goods.

Loss or damage in transit

10. Goldacres is not responsible for any loss or damage to Goods in transit. Goldacres shall render the Purchaser such assistance as may be necessary to press claims on carriers provided that the Purchaser shall have notified Goldacres and the carriers immediately the loss or damage is discovered on receipt of Goods and shall lodge a claim on the carrier within three days of the date of receipt of the Goods. Insurance of Goods in transit is the responsibility of the Purchaser.

Limit of Liability

11. (1) Goldacres liability for Goods manufactured by it is limited to:

(a) where the law implies consumer guarantees into these terms and conditions pursuant to Part 3.2 Division 1 of Schedule 2 to the Competition and Consumer Act 2010 (C'th") ("consumer guarantees") which cannot be excluded and Goldacres breaches a consumer guarantee, the loss and damage the Purchaser is entitled to at law which cannot be excluded by these terms and conditions;

and, in all other cases

(b) making good any defects by repairing the same or at Goldacres option by replacement within a period not exceeding either 1000 hours or twelve calendar months, whichever comes first, after the Goods have been dispatched provided that:
(i) the defects have arisen solely from faulty materials or workmanship;
(ii) the Goods have not received maltreatment inattention or interference;
(iii) accessories of any kind used by the Purchaser are manufactured or approved by Goldacres;
(iv) where applicable, the seals on the Goods remain unbroken;
(v) there has been no improper adjustment, calibration or operation;
(vi) the use of accessories including consumables, hardware or software (not manufactured by Goldacres) has been approved in writing by Goldacres;
(vii) no contamination or leakage has been caused or induced;
(viii) any modification to the Goods have been authorised in writing by Goldacres;
(ix) there has been no inadequate or incorrect use, storage, handling or application of the Goods;
(x) there has been no use or operation of the Goods outside of the physical, electrical or environmental specifications of the Goods;
(xi) there has been no inadequate or incorrect site preparations;
(xii) there has been no inadequate or improper maintenance of the Goods;
(xiii) it has not been caused by fair wear and tear; and
(xiv) firstly the Goods have been thoroughly inspected and any damage (from whatever cause) to the Goods (and in particular – the structure, welding, seams, bolts, booms) has been repaired prior to the Goods being operated, used driven or moved and on each occasion the tanks are filled; and
(xv) there has been no failure to comply with the requirements of all present or future laws or regulations relating to the Goods and/or the use and/or the operation of the Goods; and
(xvi) there has been no failure to maintain a record of hours of operation (which record shall contain full details of all inspections, repairs and maintenance) and produce same to Goldacres at the time of the claim;
(xvii) the defective Goods or any damaged part of the Goods are promptly returned free of cost to Goldacres or a representative of Goldacres;
(xviii) all warranty related repairs have been carried out with the prior authorisation of Goldacres;

(2) If Goods or any part thereof are not manufactured by Goldacres, in particular engines, engine accessories, transmissions, transfer cases, differentials, tyres, tubes, batteries, radios and UHFs, the guarantee of the manufacturer thereof shall be accepted by the Purchaser and is the only guarantee given to the Purchaser in respect of the Goods or that part provided always that this clause does not seek to exclude the consumer guarantees;

(3) In the case of hydraulic systems, Goldacres shall replace defective parts in accordance with clause 11(1) of these conditions, provided that the failure of the part was not related to contamination within the system, Goldacres shall not be liable for labour in the case of repairing hydraulic system defects;

(4) Goldacres will not accept liability for damage attributed to fair wear and tear including but not limited to fair wear and tear to nozzles, chains, belts, filters, brake pads, polyethylene bushes and liquid pump valves, valve O-rings, diaphragms and seals;

(5) Goldacres shall not be liable for and the Purchaser releases Goldacres from any claims in respect of faulty or defective design of any Goods supplied unless such a design has been wholly prepared by Goldacres and the responsibility for any claim has been specifically accepted by Goldacres in writing and in any event Goldacres liability hereunder shall be strictly limited to the replacement of defective parts in accordance with paragraph 11(1) of these conditions provided always that this clause does not seek to exclude the consumer guarantees;

(6) Except as provided herein, all express and implied warranties, guarantees and conditions under statute or general law as to the merchantability, description, quality, suitability or fitness of the Goods for any purpose or as to design, assembly, installation, materials or workmanship or otherwise are hereby expressly excluded and Goldacres shall not be liable for physical or financial injury, loss or damage or for consequential loss or damage of any kind arising out of the supply, layout, assembly, installation or operation of the Goods or arising out of Goldacres negligence or in any other way whatsoever;

(7) The benefit of any warranty provided under these terms and conditions shall only be available to the Purchaser and shall not be transferable by the Purchaser;

(8) The warranties provided under these terms and conditions do not extend to second hand or used Goods that may be sold by Goldacres.

12. Goldacres liability for breach of a consumer guarantee is hereby limited (in the case of goods and services not used for personal, domestic or household purposes) to:

(1) in the case of Goods, any one or more of the following:
(a) the replacement of the Goods or the supply of equivalent Goods;
(b) the repair of the Goods;
(c) the payment of the cost of replacing the Goods or acquiring the equivalent Goods;
(d) the payment of having the Goods repaired; or
(2) in the case of services;
(a) the supplying of the services again; or
(b) the payment of the cost of having the services supplied again.

Prices

13. (1) Unless otherwise stated in writing by Goldacres, all prices quoted by Goldacres are inclusive of GST for supplies within Australia and exclusive of GST for exports outside of Australia. Prices quoted are those ruling at the time of quotation or the date the price is given and are based on rates of freight, insurance, customs, duties, taxes, exchange, shipping expenses, sorting and stacking charges, cartage, cost of materials and other charges affecting the cost of production ruling on that date and any alterations thereto either before acceptance of or during currency of the contract shall be to the Purchaser's account.

(2) For the purpose of 38-185 of the GST Act, the day upon which the seller gives the invoice for the supply shall be the date of the invoice.

Payment

14. (1) The purchase price in relation to the Goods and the cost of the service shall be payable without deduction and or set off and payment thereof shall be made on or before the thirteenth day of the month following the delivery of the Goods or performance of the services unless other terms of payment are expressly stated in writing.

(2) A decreasing or increasing adjustment and or the issuing of an adjustment note, pursuant to Division 21 and Division 29-C of the GST Act, shall not, in any way, constitute a release, waiver, and or forgiveness of the debt incurred by the Purchaser.

Interest on overdue payments

15. If Goldacres is not paid for any Goods or services on the due date specified in this agreement without prejudice to any other right or remedy, all outstanding money shall bear interest at the rate set, pursuant to the Penalty Interest Rates Act, Victoria, 1986, as such money, together with interest shall be recoverable forthwith from the Purchaser.

Rights in relation to Goods.

16. (1) Title to the Goods supplied by Goldacres to the Purchaser shall remain with Goldacres until the total amount due in respect of the Goods and all monies owing to Goldacres have been paid in full (the "Debts"). Risk in the Goods shall pass to the Purchaser upon delivery.

(2) The Purchaser shall have the right to resell Goods but only as fiduciary agent and trustee for Goldacres by way of bona fide sale at full market value and in the ordinary course of its business.

(3) Until all the Debts have been paid in full:
(a) the Purchaser shall take custody of the Goods as trustee, fiduciary agent and bailee for Goldacres;
(b) the Purchaser shall keep the Goods separate from any other goods and properly marked, stored, protected and insured;
(c) the Purchaser must hold all of the money it receives ("Proceeds"):
(i) from the sale of any property into which Goods supplied have been incorporated; and
(ii) from the sale of Goods or provision of services including the Goods supplied by the Goldacres as bailee, fiduciary agent and trustee for Goldacres, but the Purchaser need not hold on trust any money exceeding the amount of the Debts at the time the money is received.
(d) The Purchaser expressly acknowledges that it is bound by the fiduciary obligation created in the preceding paragraph and acknowledges that:
(i) it must hold the Proceeds on trust for Goldacres;
(ii) it must place the whole of the Proceeds in an account separate from its own moneys (the "Proceeds Account");
(iii) it must maintain the Proceeds Account separate from its own moneys at all times.
(iv) it must maintain proper records for the Proceeds Account.
(v) it must not assign or encumber any book debts arising from sales made in circumstances set out in clauses 16(c)(i) and (ii) or do any other act in derogation of Goldacres' legal or beneficial interests; and
(vi) it must account to Goldacres on demand for all moneys standing to the credit of such account.
(e) For the purposes of identification of different consignments of Goods purchased from Goldacres and receipt of Proceeds, the Purchaser agrees that the principle of "Last In, First Out" shall be applied to any items that cannot be distinguished.
(f) Goldacres may trace the Proceeds in equity.

(4) Goldacres may at any time, without notice to the Purchaser and without prejudice to any other rights which it may have against the Purchaser, terminate any contract connected with the Goods and the bailment referred to in clause 16(3) and enter upon any premises owned or occupied by the Purchaser where Goldacres reasonably believes the Goods may be stored, and repossess the Goods without liability for any damaged caused, and subsequently dispose of the Goods at Goldacres' discretion if:
(a) the Debts are not paid in accordance with these terms and conditions or any other contract or arrangement between Goldacres and the Purchaser; or
(b) Goldacres receives notice of or reasonably believes that:
(i) a third person may attempt to levy execution against the Goods; or
(ii) the Purchaser is insolvent (within the meaning of the Corporations Act 2001) or bankrupt; or
(iii) the Purchaser has entered into any arrangement or composition with its creditors, gone into liquidation, or has appointed a receiver, a receiver and manager or administrator.

(5) If after repossession under clause 16(4) Goldacres sells the Goods, Goldacres shall account to the Purchaser for any proceeds of sale (less expenses of repossession and sale) that exceeds the amount of the outstanding Debts.

(6) If any Goods belonging to Goldacres are disposed of by the Purchaser or an insurance claim is made in respect of them, Goldacres shall be entitled to trace the sale or insurance proceeds, which proceeds shall be held by the Purchaser in a separate bank account on trust for Goldacres.

(7) The Purchaser agrees and acknowledges that in the event it sells Goods to a third party on account, it will include in its terms and conditions of sale a provision under which the Purchaser retains title to the Goods until such time that the total amount due in respect of the Goods and all monies owing to the Purchaser have been paid in full by that third party debtor. The Purchaser also agrees and acknowledges that in these instances, it will register its PMSI in accordance with the PPSA in respect of its security interest in the Goods.

PPSA provisions

17. (1) The Purchaser acknowledges that these terms and conditions constitute a security agreement for the purposes of section 20 of the PPSA and that a security interest exists in all Goods (and any associated Proceeds from their sale) previously supplied by Goldacres to the Purchaser (if any) and in all in future Goods (and any associated Proceeds from their sale) that may be supplied to the Purchaser by Goldacres.

(2) The Purchaser acknowledges that Goldacres has a first ranking purchase money security interest ("PMSI") (as defined in section 14 of the PPSA) in the Goods and the Purchaser must not jeopardise such ranking (whether by act or omission).

(3) The Purchaser acknowledges that it has received value as at the date of first delivery of the Goods and has not agreed to postpone the time for attachment of the security interest (as defined in the PPSA) granted to Goldacres under these terms and conditions.

(4) The Purchaser will execute documents and do such further acts as may be required by Goldacres to register the security interest granted to Goldacres under these terms and conditions under the PPSA.

(5) Until ownership of the Goods passes, the Purchaser must not give to Goldacres a written demand or allow any other person to give Goldacres a written demand requiring Goldacres to register a financing change statement under the PPSA in respect of Goldacres' interest in the Goods.

(6) The Purchaser must indemnify Goldacres and on demand reimburse Goldacres for all costs and expenses incurred by Goldacres in respect of these terms and conditions including but not limited to Goldacres registering its security interest in the Goods, lodging, discharging or amending any financing statement or financing change statement, or otherwise complying with the PPSA.

(7) The Purchaser agrees (other than as provided in these terms and conditions) not to sell, lease, mortgage, deal with, dispose of or create or attempt to create any other security interest in or affecting the Goods unless and until the Purchaser's Debts have been satisfied.

(8) The Purchaser waives its rights under the following provisions of Chapter 4 of the PPSA:
(a) to receive a notice on enforcement action against liquid assets (section 121(4),
(b) to receive a notice to seize collateral (section 123);
(c) to receive a notice of disposal of Goods by Goldacres purchasing the Goods (section 129);
(d) to receive a notice to dispose of Goods (section 130);
(e) to receive a statement of account following disposal of Goods (section 132(2));
(f) to receive a statement of account if no disposal of Goods for each 6 month period (section 132(4));
(g) to receive notice of any proposal of Goldacres to retain Goods (section 135(2));
(h) to object to any proposal of Goldacres to either retain or dispose of Goods (section 137(2));
(i) to redeem the Goods (section 142);
(j) to reinstate the security agreement (section 143);
(k) to receive a notice of any verification statement (section 157(1) and section 157(3);

(9) The rights Goldacres may have under the PPSA are supplementary and in addition to those set out in these terms and conditions and do not derogate from the rights and remedies of Goldacres under these terms and conditions or under any other statute or under general law.

(10) The Purchaser must give 10 business days prior written notice of any proposed change in the Purchaser's name or other identifying characteristics and details.

Purchasers property

18. Any property of the Purchaser under Goldacres' custody or control shall be entirely at the Purchaser's risk as regards loss or damage caused to the property or by it.

Storage

19. Goldacres reserves the right to make a reasonable charge for storage if delivery instructions are not provided by the Purchaser within (14) fourteen days of a request by Goldacres for such information.

Returned Goods

20. Goldacres shall not be under any obligation to accept Goods returned by the Purchaser and will do so only on terms to be agreed in writing in each individual case.

Goods sold

21. All Goods to be supplied by Goldacres shall be described on the purchase order agreed by Goldacres and the Purchaser and the description on such purchase order modified as so agreed shall prevail over other descriptions including any Purchaser's specification or enquiry.

Cancellation

22. No order may be cancelled except with the consent in writing and on terms, which will indemnify Goldacres against all losses.

No waiver

23. The failure of any party to enforce the provisions of these terms and conditions or to exercise any rights expressed in these terms and conditions shall not be a waiver of such provisions or rights and shall not affect the enforcement of this agreement. The exercise by any party of any of its rights expressed in this agreement shall not preclude or prejudice such party from exercising the same or any other rights it may have irrespective of any previous action taken by that party.

Force Majeure

24. If by reason of any fact, circumstance, matter or thing beyond the reasonable control of Goldacres is unable to perform in whole or in part any obligation under these terms and conditions then Goldacres shall be relieved of that obligation under these terms and conditions to the extent and for the period that it is so unable to perform and shall not be liable to the Purchaser in respect of such inability.

Passing of risk

25. Risk in the Goods shall pass to the Purchaser upon delivery of the Goods to the Purchaser or collection of the Goods by the Purchaser's agent or carrier as the case may be.

Exclusion of liability

26. To the extent permitted by law Goldacres shall not be liable to the Purchaser in contract or in tort arising out of, or in connection with, or relating to, the performance of the Goods or any breach of these conditions or any fact, matter or thing relating to the Goods or error (whether or not it is negligent or a breach of contract) in information supplied to the Purchaser or a user before or after the date of the Purchaser's or user's use of the Goods and Goldacres shall be under no liability for damages arising out of the use of any chemicals, liquids, or mixtures in the Goods, nor for any application, not for the application methods nor for the environmental effects, which may result therefrom or from the use of the Goods.

Exclusion of representations and arrangements

27. To the extent permitted by law the terms and conditions supersede and exclude all prior and other discussions, representations (contractual or otherwise) and arrangements relating to the supply of the Goods or any part thereof including, but without limiting the generality of the foregoing, those relating to the performance of the Goods or any part thereof or the results that ought to be expected from using the Goods.

Place of contract

28. The contract for sale of the Goods and the provision of the services is made in the State of Victoria and the Purchaser agrees to submit all disputes arising with Goldacres to the courts of such State and any court competent to hear appeals therefrom.

Contents

1 CHASSIS **7**

Chassis - 4000-8500L 7
Chassis - 4000-8500L 8
Pull - 4000-6500L 9
Pull - 4000-6500L 10
Pull - 7500/8500L 11
Pull - 7500/8500L 12
Front Steps - 4000-8500L 13
Hand Rails - 4000-6500L 14
Hand Rails - 7500/8500L 15
Handrail Gauge Assembly 16
Gauges - Air & Spray Assembly 17
Gauges - Air & Dual Spray Assembly 18
H-Frame - 4000-6500L 19
H-Frame - 4000-6500L 20
Boom Rest - 4000-6500L 21
Boom Rest - 6500L - 30m Boom 22
H-Frame - 7500/8500L 23
H-Frame - 7500/8500L 24
Boom Rest - 7500/8500L 25
ISOBUS Node Cover 26

2 PUMPS **27**

Zeta 260 - PTO Shaft Drive 27
Zeta 260 - PTO Shaft Drive Assembly . . . 28
Zeta 260 - Hydraulic Drive 29
Zeta 260 - Hydraulic Drive Assembly 30
Zeta 300 - PTO Shaft Drive Assembly . . . 31
Zeta 300 - Hydraulic Drive - 4000-7500L . . 32
Zeta 300 - Hydraulic Drive - 8500L Only . . 33
Zeta 300 - Hydraulic Drive Assembly 34
Hydraulic Drive Conversion Kit 35
Hydraulic Hose Kit 36
Pressure Flow Compensator 37

3 FLUSH TANK **39**

400L Flush Tank Frame 39
400L Flush Tank Assembly 40

4 RIGHT HAND POD **41**

RH POD - Mounting 41
RH POD - Mounting 42
RH POD - Internal Configurations 43
RH POD - Internal Configurations 44
RH POD Manifold - Airbag & Foam 45
RH POD Manifold - Foam Only 46
RH POD Manifold - Airbag Only 46
Airbag Compressor Mounting 47
Airbag Compressor Fittings 48
Airbag Compressor Assembly 49
Airbag Compressor Pressure Switch 50
Airbag & Foam Compressor Mounting . . . 51
Foam Marker Compressor Fittings 52
Foam Marker Compressor Mounting 53
Foam Marker Compressor Assembly 54
Foam Marker Compressor Assembly 55
Foam Marker Solenoid Assembly 56
Foam Marker Exhaust Valve Assembly . . . 57
RapidFire & Airbag Compressor Mounting . 58
RapidFire Compressor Assembly 59
Fill Pump Spool 60

5 LEFT HAND POD **61**

LH POD - Overview 61
LH POD Assembly 62
LH POD Assembly 63
LH POD Assembly 64
LH POD Door Cover 67
Suction Filter Assembly - 260 Zeta 68
Suction Filter Assembly - 300 Zeta 69
3” Fill Mount 70
Chemical Probe Assembly 71
Wash Down Gun Assembly 72

Wash Down Gun Valve Assembly 72
Transcal Valve Assembly 73
Flush Tank Filter Manifold Assembly 73
Flush Tank Check Valve Assembly 74
Flush Tank Fill Tap Assembly 74
Pressure Control Assembly 75
Pressure Gauge Assembly 75
Pressure Delivery Check Valve Assembly . . 76
Fill Manifold Assembly 77
Foam Marker Fill Tap Assembly 78
Transcal Tap Assembly 78
Hopper Manifold Assembly 79
2 Way Valve Assembly 80
4 Way Valve Assembly 81
Chemical Transfer Pump Mounting 82

6 DIRECT CHEMICAL INJECTION 83

DCI Pod 83
DCI Pod 84
DCI Third Unit Assembly 85
DCI Third Unit Assembly 86
DCI Bottle - 120L Assembly 87
DCI Bottle - 165L Assembly 88
Fill Shut Off Assembly 89
Rinse Nozzle & Cap 89
Mixing Chamber 90
Cover Plate Assembly 91
High Volume Pump - Dual Unit 92
High Volume Pump - Third Unit 93
Panel Alignment Strip 94
Vacuum Gauge Assembly 94
Ball Valve Assembly 95
Chemical Pump Suction Valve - Dual Unit . . 96
Chemical Pump Suction Valve - Third Unit . 97
Chemical Tank Vacuum Valve Assembly . . . 98
Tank Rinse Ball Valve Assembly 99
Tank Vent Ball Valve Assembly 100
Chemical Probe Coupling Valve Assembly 101

7 DUAL PRODUCT 103

Ramsay Valve Assembly 103
Ramsay Valve Assembly 104
Dual Product & DCI Mixer 104
Dual Product & DCI Mixer 105
Dual Pressure Filters 105
Dual Product Manifold 106
Twin Solenoid Assembly 107

8 INDUCTION HOPPER 109

60L Induction Hopper 109
60L Induction Hopper Frame 110
60L Induction Hopper Frame 111
60L Induction Hopper Tank 112
60L Induction Hopper Tank 113
60L Induction Hopper - Valve Bottom . . 113

9 FOAM MARKER 115

Foam Marker Tank 100L 115
Foam Concentrate Bottle 116
Foam Generator 117
Foam Generator Mounting 117
Foam Accumulator Assembly 118
Filter & Ball Valve 118
Foam Marker Filter 119

10 TRANSCAL 121

Transcal Assembly 121
Transcal Assembly 122
Rinse Nozzle Cap Assembly 122

11 MAIN TANK 123

Tank Assembly - 4000-5000L 123
Tank Assembly - 4000-5000L 124
Tank Assembly - 6500L 125
Tank Assembly - 6500L 126
Tank Assembly - 7500/8500L 127
Tank Assembly - 7500/8500L 128
Tank Rinsing Nozzle - Tee Assembly . . . 129
Tank Rinsing Nozzle - Elbow Assembly . . 129
Outlet - Tank Overflow 2” 130
Inlet - Boom Recirculation (RapidFlow only) 130
Inlet - Hopper Fill 2”- Straight 131
Inlet - Tank Fill 2” - Straight 131
Inlet - Tank Fill 3” - Optional 132
Supermix Agitator 132

Venturi Filler 133
Dry Sight Tube - Locating Cap Assembly . 134
Dry Sight Tube - Float & Guide 134
Dry Sight Tube - Float Assembly 135
Dry Sight Tube - Cap & Tube Assembly. . 136
Remote Drain - 4000-6500L. 137
Remote Drain - 7500/8500L 138
Sump Drain Valve 139
Tank Stops 139
Tank Straps & Brackets - 4000-8500L . . . 140

12 WHEELS, AXLES & MUDGUARDS 141

Air Bag Axle - 4000-6500L. 141
Air Bag Axle - 4000-6500L. 142
Air Bag Axle - 7500/8500L 143
Air Bag Axle - 7500/8500L 144
Rigid Axle 145
Braked Axle Assembly. 146
Brake Mechanism Assembly 147
Steering Axle Assembly 148
Steering Axle Assembly 149
Wheel Speed Sensor. 150
Wheels. 151
Mudguards 152
Mudguards 153
Hub - 90 Series - Unbraked 154
Hub - 110 Series - Unbraked 155
Hub - 110 Series - Braked (New Series) . 156
Hub - 110 Series - Braked (Old Series) . . 157

13 BOOM CENTRE 158

Paralift & Paralift Arms. 158
Paralift & Paralift Arms. 159
Boom Centre & Paralift 160
Boom Centre & Paralift 161
Boom Centre Assembly 162
Boom Centre Assembly 163
Boom Centre Tilt Links 164
Boom Centre Tilt Cylinders 164
Cable Mount - Rear LH 165
Cable Mount - Rear RH 166
Delta Link Locking Plate 167
Double Roll Shocker Assembly 168
Yaw Kit - Spring 169
Yaw Kit - Hydraulic. 170
Yaw Kit - Hydraulic. 171
Centre Level 172
Centre Level - Pivot Assembly. 173
Lower Limit Switch. 174
RapidFire Assembly 175
RapidFire - RapidFlow Return Valve. . . . 176
RapidFire - 7 Section Solenoid Box 177
RapidFire - 10 Section Solenoid Box. . . . 178
RapidFire - Solenoid Valves 179
Solenoid Valve Unit 179
Remote Manual Grease Station 180
UltraGlide Block & Smart Box Mounting . 181
Raven XT - Slant Cylinder Mounting . . . 182
Raven XT - Slant Cylinder Assembly . . . 183
Raven XT - Sensor Bracket Assembly. . . 184
Node - Raven 185
Nodes - UltraGlide. 185
Oversize Sign Mount. 186

14 BOOM WING 188

Fence Line End Protector - Quick Fit . . . 188
Boom Protector Assembly - Outer 189
Boom Protector Assembly - Inner. 189
Boom Fold Adjuster 190
Cable Drum 191
Cable Drum 192
Bi-fold 193
Bi-fold 194
Boom Cables 24-36m 195
Boom Cable Spring - 24m 196
Boom Cable Spring - 28-30m 196
Boom Cable Springs - 33 & 36m. 197
Upper Pivot Assembly. 198
Lower Pivot Assembly. 198
Steel Inner Wings 199
Aluminium Outer Wings. 200
Aluminium Breakaway Tip 200
Aluminium Outer 201
3D Breakaway 2.0 202
3D Breakaway 2.0 203

3D Breakaway 2.0 - Mechanism 203
Touch Down Wheel 204
Touch Down Wheel 205
Boom Line Plumbing - RapidFire. 205
Boom Line Plumbing - RapidFire. 206
Boom Line Plumbing 206
Altek Dual Nozzle Spray Body. 207
Altek Spray Stop Spare Parts 208
Teejet Single Nozzle Body 209
Teejet Turret Nozzle Body. 210
Fence Line Nozzle - Manual Operated . . 211
Fence Line Nozzle - Solenoid Operated. . 212
Adjustable Nozzle Bracket. 213
Pre Packaged Kits 213
UltraGlide Sensor Mount 214
Boom Poly Pipe Clamps 214
Boom Poly - 600mm. 215
Boom Poly - 1100mm 215
Boom Poly - 1200mm 215
Boom Poly - 1600mm 216
Boom Poly - 2100mm 217
Boom Poly - 2600mm 218
Boom Poly - 3100mm 218

15 ELECTRICS 220

Lighting - Boom Tip LEDs 220
Lighting - Tail Light & Beacon 221
Lighting - POD Work Light 221
Lighting - Boom Lights 222
Lighting - Night Pro LEDs 223
Electrical Components. 223
Electrical Connectors - AMP. 224
Electrical Connectors - AMP. 225
Electrical Connectors - Weather Pack. . . 226
Electrical Connectors - Weather Pack. . . 227
Electrical Connectors - Din Hirschmann . 227
Electrical Connectors - Deutsch. 228
Electrical Connectors - Deutsch. 229
Electrical Connectors - Deutsch. 230
Electrical Connectors - Deutsch. 231
Electrical Connectors - Deutsch. 232
Console Mounting Kit 233
Control Boxes 234
Control Box - Switch Parts. 235

16 SCHEMATICS 236

Direct Chemical Injection - Dual Unit . . . 236
Direct Chemical Injection - Triple Unit . . 237
Electrical Layout - Overview. 238
Electrical Layout - Overview. 239
Electrical Layout - Page 1 240
Electrical Layout - Page 2 241
Electrical Layout - Page 3 242
Electrical Layout - Page 4 243
Electrical Layout - Page 5 244
Electrical Layout - ISO BUS 245
Hydraulics - No Spool Valves 246
Hydraulics - Spool Valves Closed Centre . 247
Hydraulics - Spool Valves Open Centre . . 248
Hydraulics - Hose - 4000/5000L 249
Hydraulics - Hose - 4000/5000L 250
Hydraulics - Hose - 6500/7500L 251
Hydraulics - Hose - 6500/7500L 252
Hydraulics - Hose - 8500L. 253
Hydraulics - Hose - 8500L. 254
Plumbing - Boom Valves 255
Plumbing - RapidFlow System 256
Pneumatics - Airbag & RapidFire. 257
Pneumatics - Airbag & Foam Marker . . . 258
Pneumatics - Hose List. 259
Transcal 260

17 DECALS 262

Decals - Base Kit 262
Decals - Base Kit 263
Decals - Base Kit 264
Decals - Base Kit 265
Decals - Base Kit 266
Decals - Base Kit 267
Decals - Base Kit 268
Decals - Base Kit 269
Decals - Base Kit 270
Decals - Tank. 271
Decals - Switch Boxes 272
Decals - Dry Sight Tube 273

18 HYDRAULICS **274**

Spool Valve Mounting Assembly 274
Spool Valve Manifold Assembly 275
Spool Valve Manifold Fittings. 276
Boom Lower Solenoid 277
Solenoid Valve - Bi-Fold 278
Solenoid Valve - Smart Steer. 279
Fill Pump Hydraulic Manifold Assembly . . 280
Bi-Fold Check Valve 281
Pressure Reducing Valve Assembly 282
Hydraulic Accumulator Manifold 283
Hydraulic Cylinder - Boom Lift - Standard. 284
Hydraulic Cylinder - Boom Lift - Suit 42m. 284
Hydraulic Cylinder - Boom Tilt 285
Hydraulic Cylinder - Boom Fold RH. . . . 286
Hydraulic Cylinder - Boom Fold LH 287
Hydraulic Cylinder - Centre Leveling . . . 288
Hydraulic Cylinder - Bi-Fold 289
Hydraulic Cylinder - Raven XT - Left . . . 290
Hydraulic Cylinder - Raven XT - Right. . . 290
Hydraulic Cylinder - Yaw 291
Hydraulic Yaw Control Valve Assembly . . 292
Hydraulic Yaw Charge Line 292
Load Sense Turbo Valve 293
Quick Release Couplings. 294
Hydraulic O-rings & Retaining Washers . . 294
Hose ID Tags. 295
Hydraulic Hoses 295
Raw Hide & Spiral Guard 296

19 plumbing **298**

Filter - Dual Pressure Assembly 298
Filter - Pressure - Body Assembly 299
Filter - 2” Fill 300
Filter - In Line Boom 301
Filter - 2” Suction 302
Fill Pump - 3” 303
Fill Pump - 3” Inlet Assembly 304
Fill Pump - 3” Outlet Assembly 305
Fill Point - 2” 306
Fill - Direct Tank - 2” 307
Fill Flow Meter - Teejet 308
Fill Flow Meter - Teejet & Shut Off Valve . 308
Flow Meter - Spray - Assembly 309
Flow Control Assembly 310
Flow Control - Fast Close Valve Assembly 311
Flow Control - Safety Valve Assembly. . . 312
Flow Distributer - Raven. 313
Flow Distributer - ISO 314
RapidFire - RapidFlow Return Valve 315
Pump - Chemical Transfer 316
Boom Valves Assembly 317
Boom Valve Unit Assembly 318
Chemical Probe 319
Enviro coupling & hose. 319
Air Filter 320
Hose Clamps. 320
Cable Ties 320
Hoses 321

Chapter 1

CHASSIS

Chassis - 4000-8500L

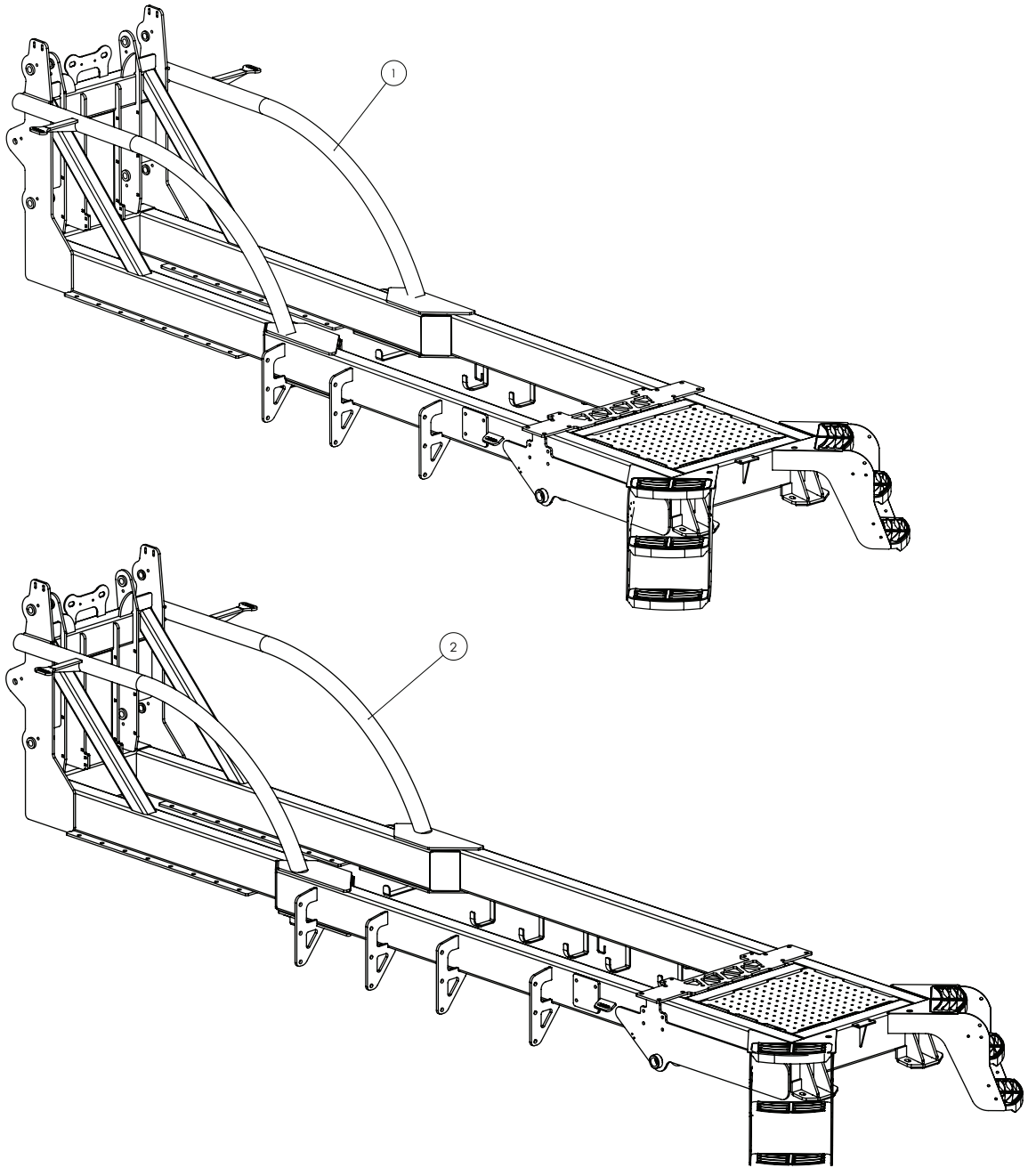

Continued over page

Chassis - 4000-8500L

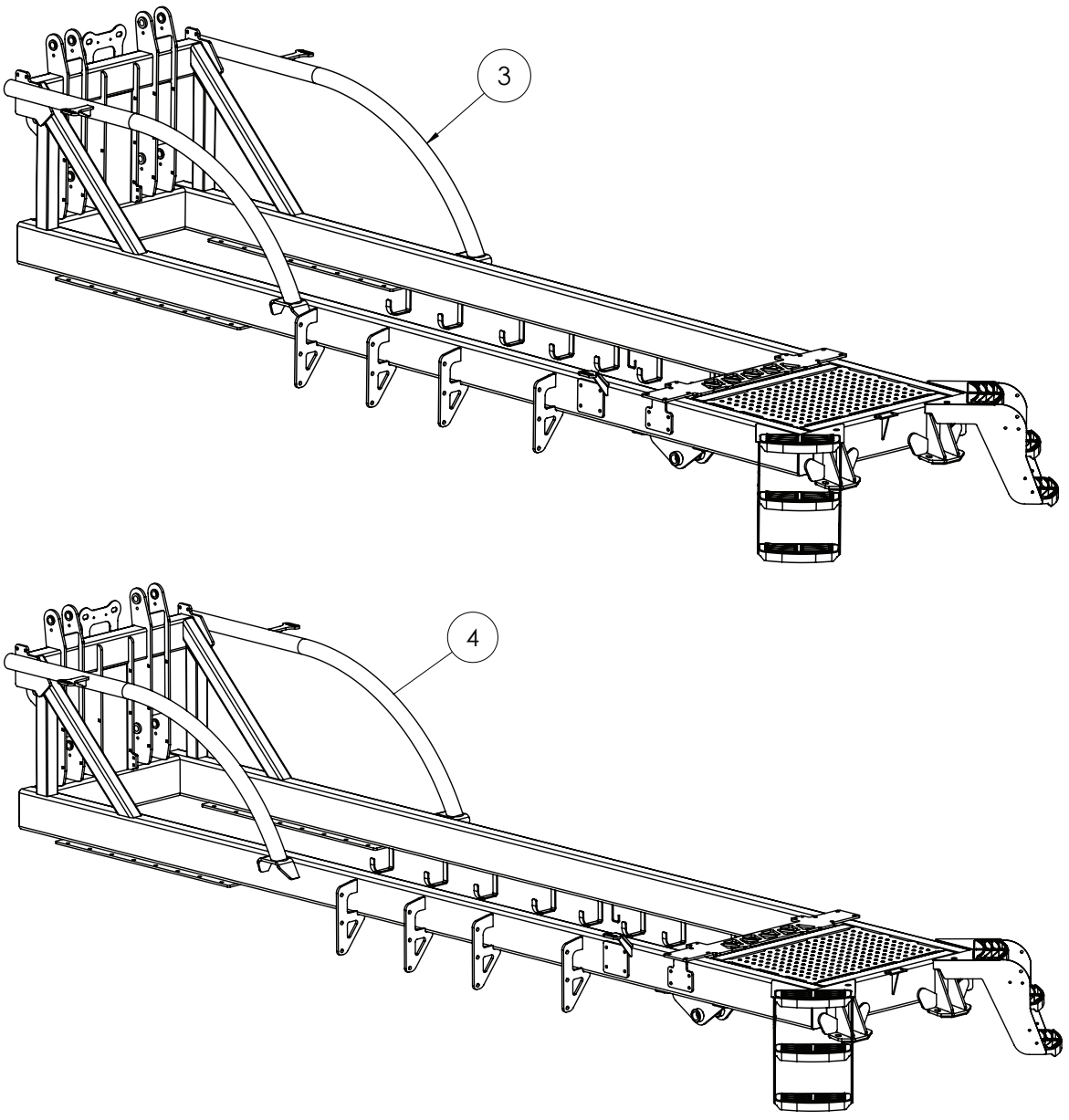

ITEM NO.	PART NUMBER	DESCRIPTION	QTY.
1	GA4659510	Chassis Prairie 4000 and 5000	1
2	GA4659515	Chassis Prairie 6500	
3	GA4659520	Chassis Prairie 7500	
4	GA4659525	Chassis Prairie 8500	

Pull - 4000-6500L

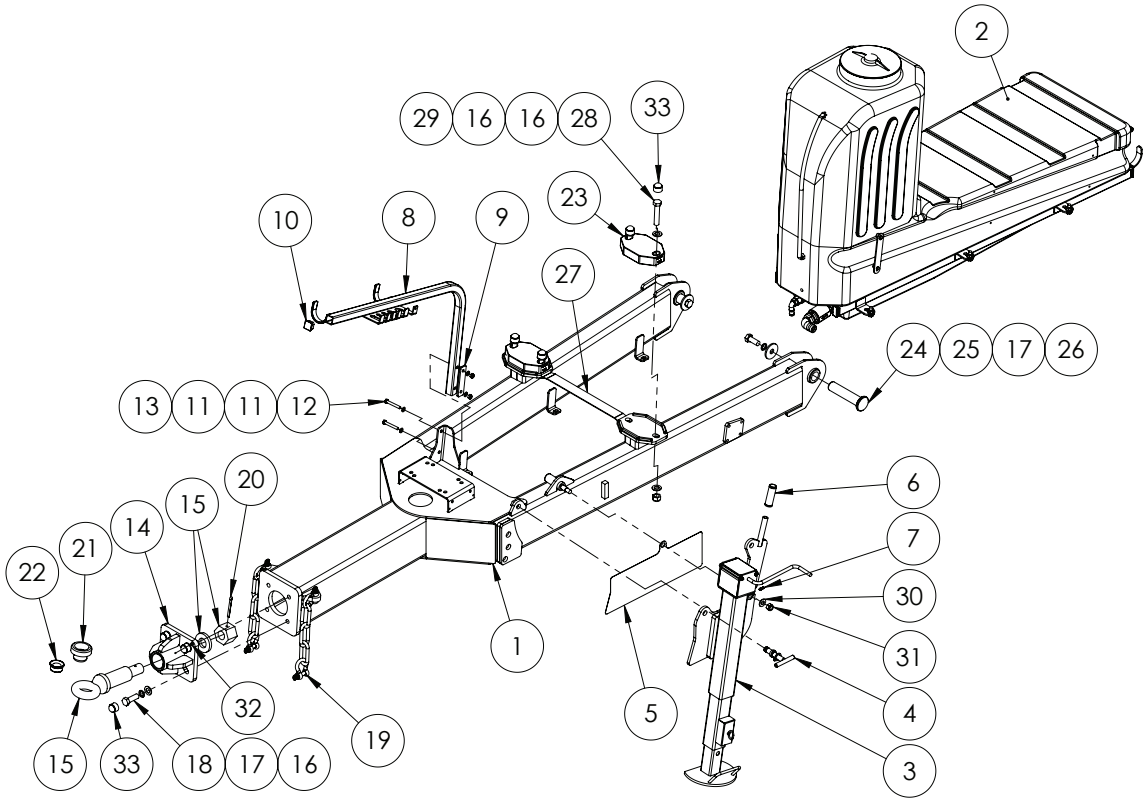

Chain and rings that retain the jack bolt are not shown
2x GA5002077 Key ring
1x Chain (GA5001491) 2mm x 20 (cut 250mm)
Saftey tow Chain not listed
2x 1m GA5065030

Note: GA4905650 - Chain safety complete kit MY13

ITEM NO.	PART NUMBER	DESCRIPTION	QTY.
1	GA4659545	Pull Prairie 4000, 5000 and 6500 MY13	1
2	^	400L Flush Tank	1
3	GA4656436	Jack Prairie Advance EF 5/6500	1
4	GA4656437	Jack T bolt Prairie advance EF	1
5	GA4522297	Prairie EF jack wear plate	1
6	GA5066700	Handle bar grip suit jack handle black	1
7	GA5009639	Grease nipple, Long, 1/4" UNF male thread, 1 1/8" long	1
8	GA4657665	Hose support arm suit EF pull	1
9	GA4522926	EF pull hose support backing plate	1
10	GA5002911	35 x 35mm square tube insert black	1
11	GA5000117	Washer 10mm Flat SS HD	4
12	GA5011163	Bolt M10 x 70 ZP GR8.8	2
13	GA5000141	Nut M10 Nyloc ZP	2
14	GA4659555	Towing eye, housing, angled, Bolt on	1
15	GA5016243	Towing eye, Suit trailing sprayer, No insert bush	1
16	GA5001741	Washer 20mm Flat SS HD	12

^ See Chapter 3 'Flush Tank' for sub-assembly.

Continued over page

Pull - 4000-6500L

ITEM NO.	PART NUMBER	DESCRIPTION	QTY.
17	GA5001721	Washer 20mm Spring SS	6
18	GA5011333	Bolt M20 x 60 ZP GR8.8	4
19	GA5075230	Bow Shackle 13mm WLL 3.25T Black	4
20	GA5051385	Split Pin M8 x 90	1
21	GA4582455	Bush, For 1 1/2" pin, Tow eye, Urethane 90 duro	1
22	GA5075075	Bush, 35 ID x 50mm OD, Suit towing eye, Steel	1
23	GA5061070	Spacer Pull EF (80 Duro Urethane Black)	2
24	PCH-019MACH	Pin with flanged end, 39.5 minor OD x 188mm long	2
25	L073A	Washer, suit drawbar pin	2
26	GA5011321	Set Screw M20 x 50 Course ZP GR8.8	2
27	GA4522385	Prairie EF belly tank retaining strap	1
28	GA5048355	Bolt, M20 x 100, ZP GR8.8	4
29	GA5048125	Nut M20 Nyloc Coarse ZP	4
30	GA5001043	Washer 16mm Flat SS HD	1
31	GA5001029	Nut M16 Nyloc ZP	1
32	GA5012203	Grease nipple, Short, 1/4” UNF	1
33	GA5054690	Cap M20 hex nut cover	8

Pull - 7500/8500L

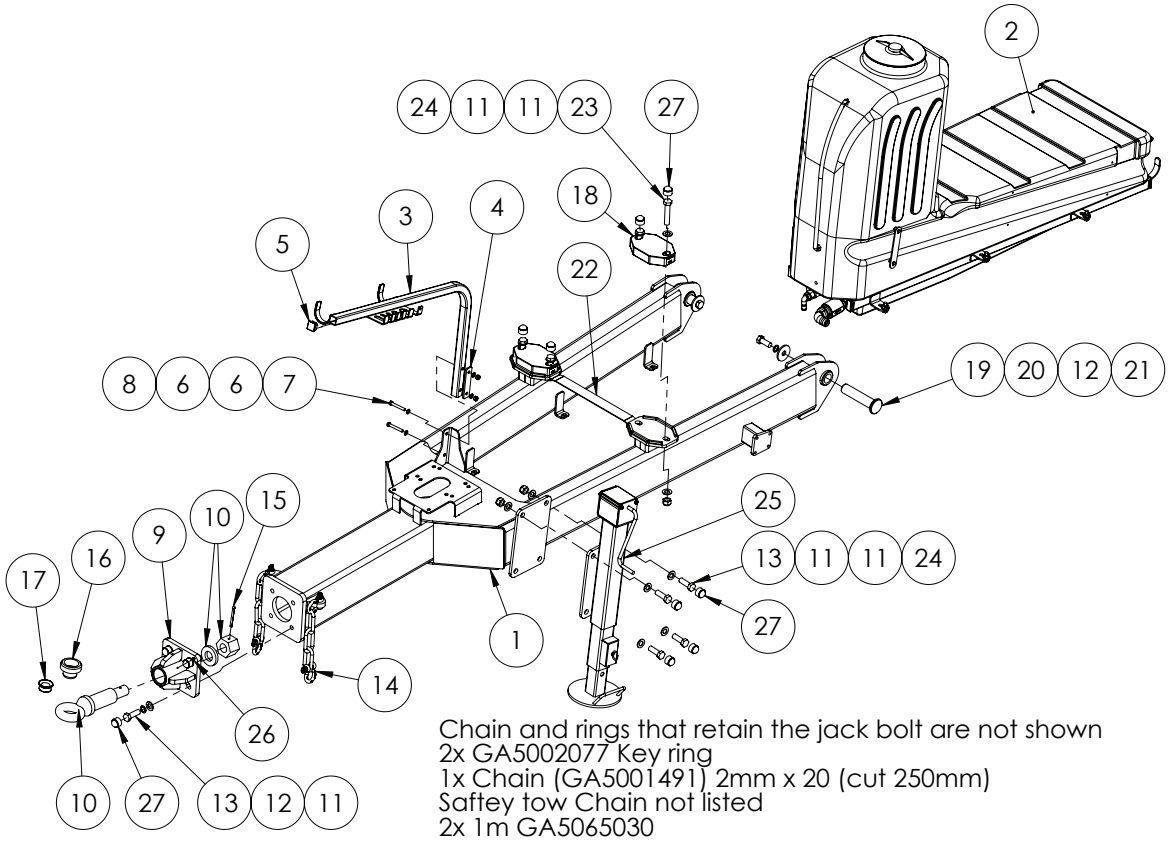

Chain and rings that retain the jack bolt are not shown
2x GA5002077 Key ring
1x Chain (GA5001491) 2mm x 20 (cut 250mm)
Saftey tow Chain not listed
2x 1m GA5065030

Note: GA4905650 - Chain safety complete kit MY13

ITEM NO.	PART NUMBER	DESCRIPTION	QTY.
1	GA4659550	Pull Prairie 7500 and 8500 MY13	1
2	^	400L Flush Tank	1
3	GA4657665	Hose support arm suit EF pull	1
4	GA4522926	EF pull hose support backing plate	1
5	GA5002911	35 x 35mm square tube insert black	1
6	GA5000117	Washer 10mm Flat SS HD	4
7	GA5011163	Bolt M10 x 70 ZP GR8.8	2
8	GA5000141	Nut M10 Nyloc ZP	2
9	GA4659555	Towing eye, housing, angled, Bolt on	1
10	GA5016243	Towing eye, Suit trailing sprayer, No insert bush	1
11	GA5001741	Washer 20mm Flat SS HD	20
12	GA5001721	Washer 20mm Spring SS	6
13	GA5011333	Bolt M20 x 60 ZP GR8.8	8
14	GA5075230	Bow Shackle 13mm WLL 3.25T Black	4
15	GA5051385	Split Pin M8 x 90	1
16	GA4582455	Bush, For 1 1/2" pin, Tow eye, Urethane 90 duro	1
17	GA5075075	Bush, 35 ID x 50mm OD, Suit towing eye, Steel	1
18	GA5061070	Spacer Pull EF (80 Duro Urethane Black)	2

^ See Chapter 3 ‘Flush Tank’ for sub-assembly.

Continued over page

Pull - 7500/8500L

ITEM NO.	PART NUMBER	DESCRIPTION	QTY.
19	PCH-019MACH	Pin with flanged end, 39.5 minor OD x 188mm long	2
20	L073A	Washer, suit drawbar pin	2
21	GA5011321	Set Screw M20 x 50 Course ZP GR8.8	2
22	GA4522385	Prairie EF belly tank retaining strap	1
23	GA5048355	Bolt, M20 x 100, ZP GR8.8	4
24	GA5048125	Nut M20 Nyloc Coarse ZP	8
25	GA4656439	Jack, suit Evo 7500 and 8500 and Prairie adv 8000L	1
26	GA5012203	Grease nipple, Short, 1/4' UNF	1
27	GA5054690	Cap M20 hex nut cover	12

Front Steps - 4000-8500L

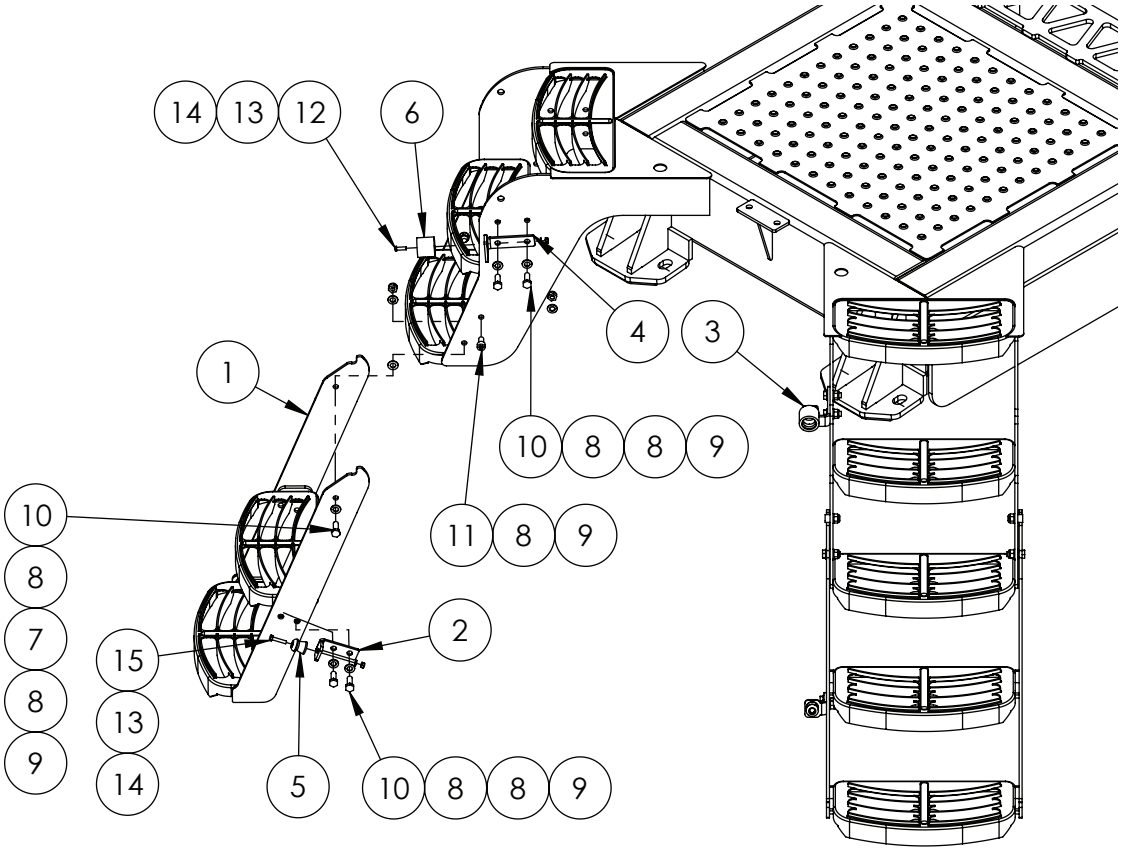

ITEM NO.	PART NUMBER	DESCRIPTION	QTY.
1	GA4659690	Lower Steps, Prairie, Eco and Special 2013	2
2	GA4522617	Latch plate, suit Prairie EF, narrow step	2
3	F70684A	Rigid step catch mounting plate	1
4	F70654A	Rigid step catch mounting plate 5mm FMS	1
5	GA5011607	Door holder, Male, Rubber, Black	2
6	GA5008629	Door holder, Female, Rubber, Black	2
7	GA5000115	Washer 10mm Flat SS	4
8	GA5000117	Washer 10mm Flat SS HD	28
9	GA5000141	Nut M10 Nyloc ZP	16
10	GA5065455	Bolt M10 x 30 ZP GR8.8	12
11	GA5011153	SHCS M10 x 20 ZP GR12.9	4
12	GA5004053	BHCS M6 x 20 SS	2
13	GA5004437	Washer 6mm Flat SS	4
14	GA5048115	Nut M6 Nyloc ZP	4
15	GA5004079	Set Screw M6 x 30 ZP GR8.8	2

Hand Rails - 4000-6500L

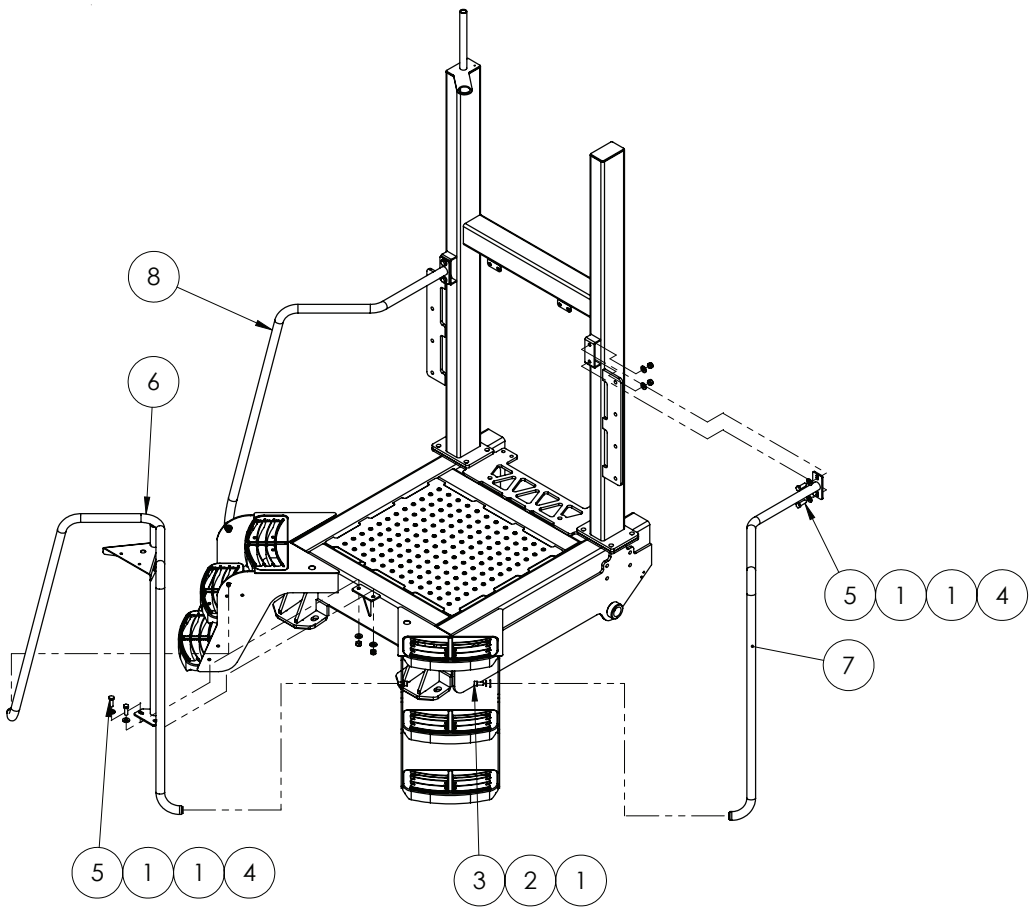

ITEM NO.	PART NUMBER	DESCRIPTION	QTY.
1	GA5000577	Washer 12mm Flat SS HD	16
2	GA5000575	Washer 12mm Spring SS	4
3	GA5000297	SHCS M12 x 25 ZP GR12.9	4
4	GA5012461	Nut M12 Nyloc ZP	6
5	GA5000311	Set screw, M12 x 35, ZP GR 8.8	6
6	GA4659650	Handrail Prairie Front	1
7	GA4659660	Handrail Prairie LH	1
8	GA4659665	Handrail Prairie RH	1

Hand Rails - 7500/8500L

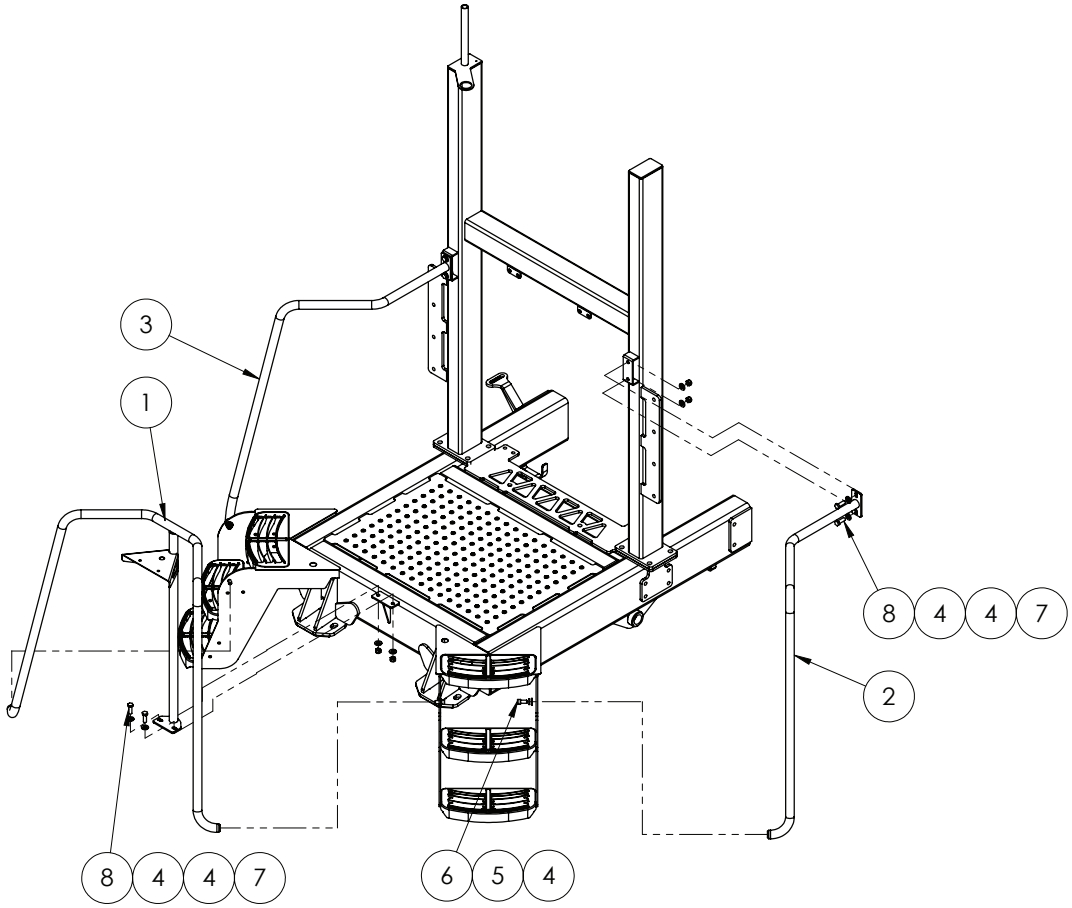

ITEM NO.	PART NUMBER	DESCRIPTION	QTY.
1	GA4659655	Handrail Advance Evo Middle 7500 8500	1
2	GA4659660	Handrail Prairie LH	1
3	GA4659665	Handrail Prairie RH	1
4	GA5000577	Washer 12mm Flat SS HD	16
5	GA5000575	Washer 12mm Spring SS	4
6	GA5000297	SHCS M12 x 25 ZP GR12.9	4
7	GA5012461	Nut M12 Nyloc ZP	6
8	GA5000311	Set screw, M12 x 35, ZP GR 8.8	6

Handrail Gauge Assembly

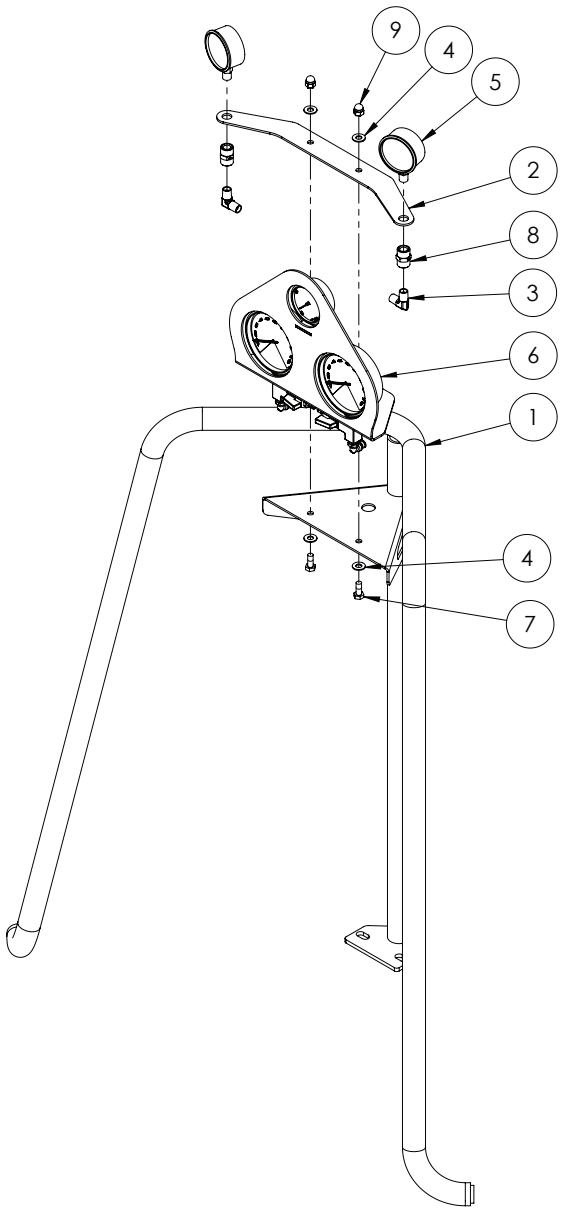

ITEM NO.	PART NUMBER	DESCRIPTION	QTY.
1	GA4659650	Handrail Prairie Front	1
2	GA4504995	Plate Gauge Prairie Bi-fold MY13	1
3	GA3500258	Hydraulic coupling, Elbow, 90 degree, 1/4" BSPT male x 1/4" BSPT male	2
4	GA5003643	Washer 8mm Flat SS HD	4
5	GA5021455	Gauge, Pressure, Small face, 3500psi	2
6	*	Gauges - Air and Spray Assembly	1
	*	Gauges - Air and Dual Spray Assembly	
7	GA5004085	Bolt M8 x 20 ZP GR8.8	2
8	GA3500211	Hydraulic adapter, Socket, 1/4” female BSP x 1/4” female BSP	2
9	GA5011457	Nut M8 Dome Nut SS	2

* Sub-assembly on following pages

Gauges - Air & Spray Assembly

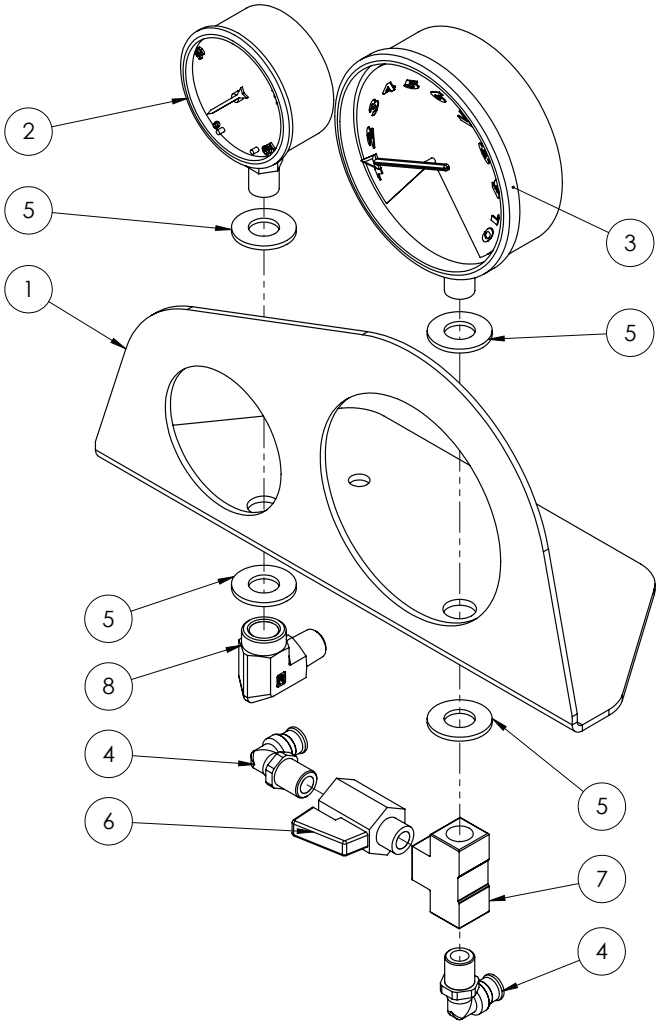

ITEM NO.	PART NUMBER	DESCRIPTION	QTY.
1	GA4505000	Plate Face Gauge Prairie Air and Spray MY13	1
2	GA4948470	Gauge, Pressure, Small face, 160psi	1
3	GA4948460	Gauge, Pressure, Large Face, 160 psi	1
4	GA5016233	Pneumatic fitting, Elbow, 90 degree, 1/4” BSP male x 6mm push type, Metal	2
5	GA5000577	Washer 12mm Flat SS HD	4
6	GA5018323	Valve, Ball, 1/4” male / female thread inlet / outlet, SS, Lever handle	1
7	GA5048300	Tee, 1/4” female thread x 1/4” female thread x 1/4” female thread, Brass	1
8	GA3500209	Hydraulic adaptor, Elbow, 90 degree, 1/4" BSPT male x 1/4" BSPT female	1

Gauges - Air & Dual Spray Assembly

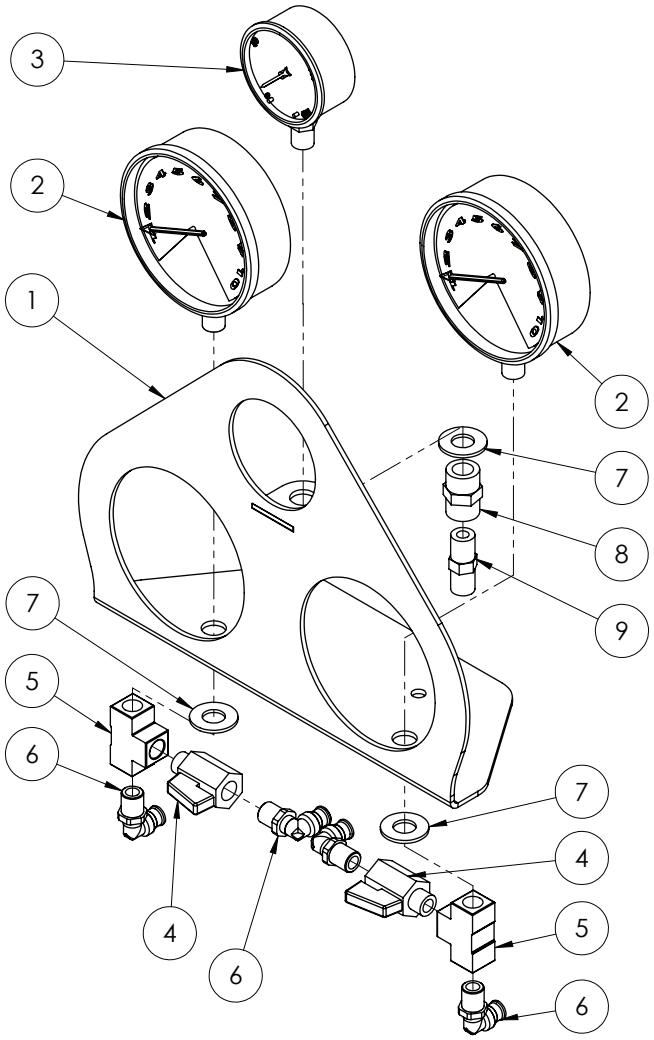

ITEM NO.	PART NUMBER	DESCRIPTION	QTY.
1	GA4659700	Plate Face Gauge Air and 2 x Spray pressure	1
2	GA4948460	Gauge, Pressure, Large Face, 160 psi	2
3	GA4948470	Gauge, Pressure, Small face, 160psi	1
4	GA5018323	Valve, Ball, 1/4" male / female thread inlet / outlet, SS, Lever handle	2
5	GA5048300	Tee, 1/4" female thread x 1/4" female thread x 1/4" female thread, Brass	2
6	GA5016233	Pneumatic fitting, Elbow, 90 degree, 1/4" BSP male x 6mm push type, Metal	4
7	GA5000577	Washer 12mm Flat SS HD	5
8	GA3500211	Hydraulic adapter, Socket, 1/4" female BSP x 1/4" female BSP	1
9	GA3500218	Hydraulic adaptor, Nipple, 1/4" BSP x 1/4" BSP	1

H-Frame - 4000-6500L

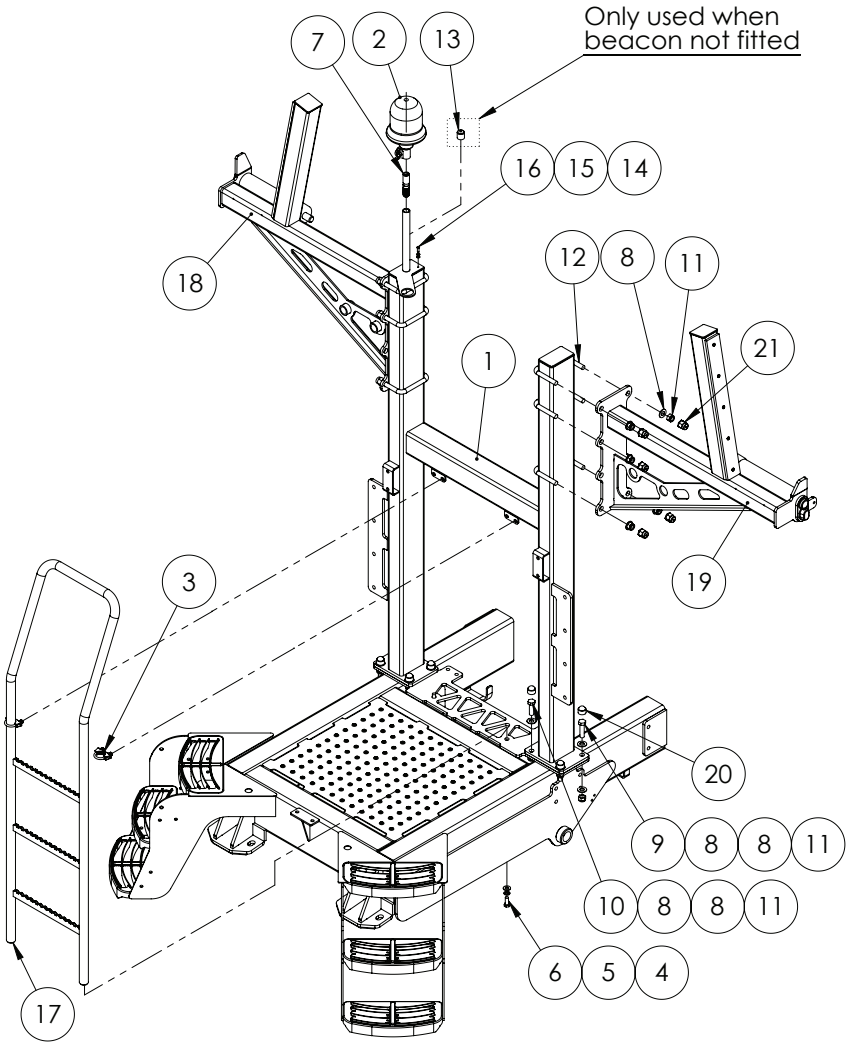

ITEM NO.	PART NUMBER	DESCRIPTION	QTY.
1	GA4654181	H-Frame Suit EF 2011	1
2	GA5048975	Beacon, Rotating, Amber, DIN A pole mount, H1 globe	1
3	GA5075120	Exhaust Clamp 36mm Heavy Duty	2
4	GA5000577	Washer 12mm Flat SS HD	2
5	GA5000575	Washer 12mm Spring SS	2
6	GA5000305	Set Screw M12 x 30 ZP GR8.8	2
7	GA5020411	Beacon insert, screw in	1
8	GA5001043	Washer 16mm Flat SS HD	28
9	GA5000939	Bolt M16 x 60 Black GR8.8	4
10	GA5000931	Bolt M16 x 50 ZP GR8.8	4
11	GA5001029	Nut M16 Nyloc ZP	20
12	GA5011277	U bolt, Square top, M16 x 127mm x 110mm	6
13	GA5052650	Cap Plastic 25.4mm Black	1
14	GA5004437	Washer 6mm Flat SS	1

Continued over page

H-Frame - 4000-6500L

ITEM NO.	PART NUMBER	DESCRIPTION	QTY.
15	GA5004447	Washer, 6mm, Spring, SS	1
16	GA5004053	BHCS M6 x 20 SS	1
17	GA4658161	Ladder, suit 2013 Prairie	1
18	*	Boom Rest - 4000-6500L Right / Boom Rest - 6500L - 30m RH	1
19	*	Boom Rest - 4000-6500L Left / Boom Rest - 6500L - 30m LH	1
20	GA5075080	Hex nut protection cap suit M16, Black	8
21	GA5054685	Cap M16 hex nut cover	12

* Sub-assembly on following pages

Boom Rest - 4000-6500L

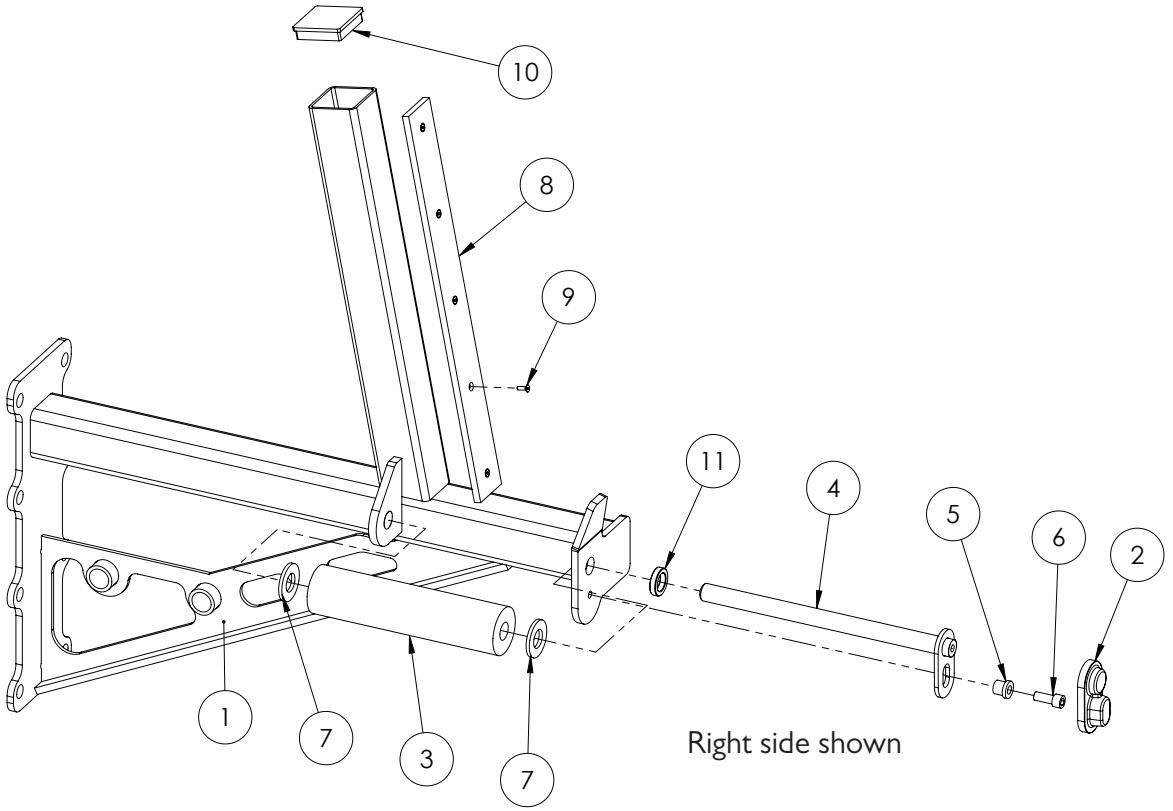

ITEM NO.	PART NUMBER	DESCRIPTION	QTY.
-	GA4904735-R	Boom Rest Right 4000-6500L Prairie Tri-Tech - Assembly	-
-	GA4904735-L	Boom Rest Left 4000-6500L Prairie Tri-Tech - Assembly	-
1	GA4659670	Boom Rest Prairie RH 4000, 5000, 6500	1
	GA4659675	Boom Rest Prairie LH 4000, 5000, 6500	1
2	GA5067885	Pin cover, Black, clip on, plastic	1
3	GA5070700	Roller Boom Rest Prairie	1
4	GA4658745	Pin suit Boom rest roller	1
5	MACH0152	Bush with shoulder, 12.3 ID x 25 OD x 21mm long	1
6	GA5000307	SHCS M12 x 30 ZP GR12.9	1
7	GA5017659	Washer, 1", Flat, ZP, Heavy duty (5mm thick)	2
8	GA5066630	Wear strip, 65 wide x 590 long x 10mm thick, Polystone 7000SR	1
9	GA5051230	CSCS M5 x 16 Countersink SS	5
10	GA5052345	End cap, Insert, 75 x 75 mm, black, plastic	1
11	GA4572135	Spacer bush, 40 OD x 25.8 ID x 9mm thick, Paralift arm spacer	1

Boom Rest - 6500L - 30m Boom

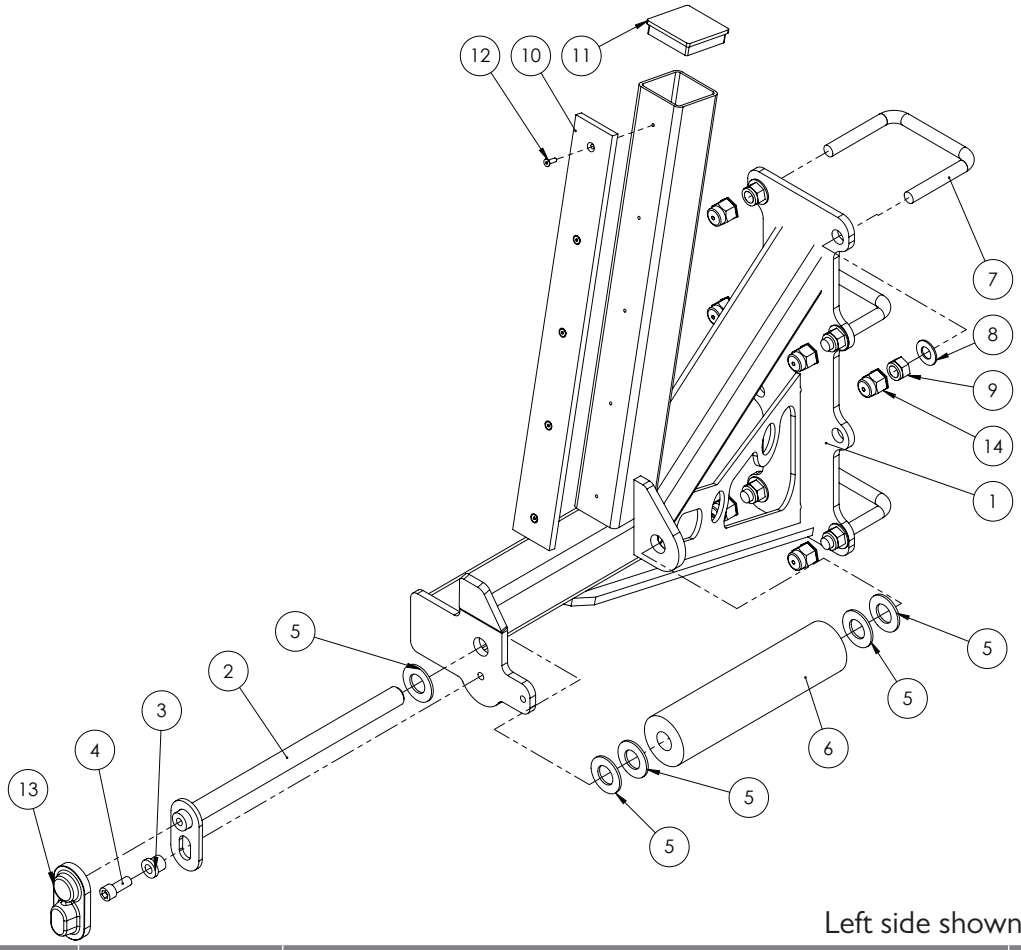

Left side shown

ITEM NO.	PART NUMBER	DESCRIPTION	QTY.
-	GA4906570	Boom Rest Assembly Step Back 250mm suit Prairie LH - Assembly	-
-	GA4906575	Boom Rest Assembly Step Back 250mm suit Prairie RH - Assembly	-
1	GA4659990	Boom Rest Step Back 250mm suit Prairie LH	1
	GA4659995	Boom Rest Step Back 250mm suit Prairie RH	1
2	GA4658745	Pin suit Boom rest roller	1
3	MACH0152	Bush with shoulder, 12.3 ID x 25 OD x 21mm long	1
4	GA5000307	SHCS M12 x 30 ZP GR12.9	1
5	GA5017681	Washer 1" x 2" 7g Flat Thin SS	5
6	GA5070700	Roller Boom Rest Prairie	1
7	GA5011277	U bolt, Square top, M16 x 127mm x 110mm	3
8	GA5001043	Washer 16mm Flat SS HD	6
9	GA5001029	Nut M16 Nyloc ZP	6
10	GA5066630	Wear strip, 65 wide x 590 long x 10mm thick, Polystone 7000SR	1
11	GA5052345	End cap, Insert, 75 x 75 mm, black, plastic	1
12	GA5051230	CSCS M5 x 16 Countersink SS	5
13	GA5067885	Pin cover, Black, clip on, plastic	1
14	GA5054685	Cap M16 hex nut cover	6

H-Frame - 7500/8500L

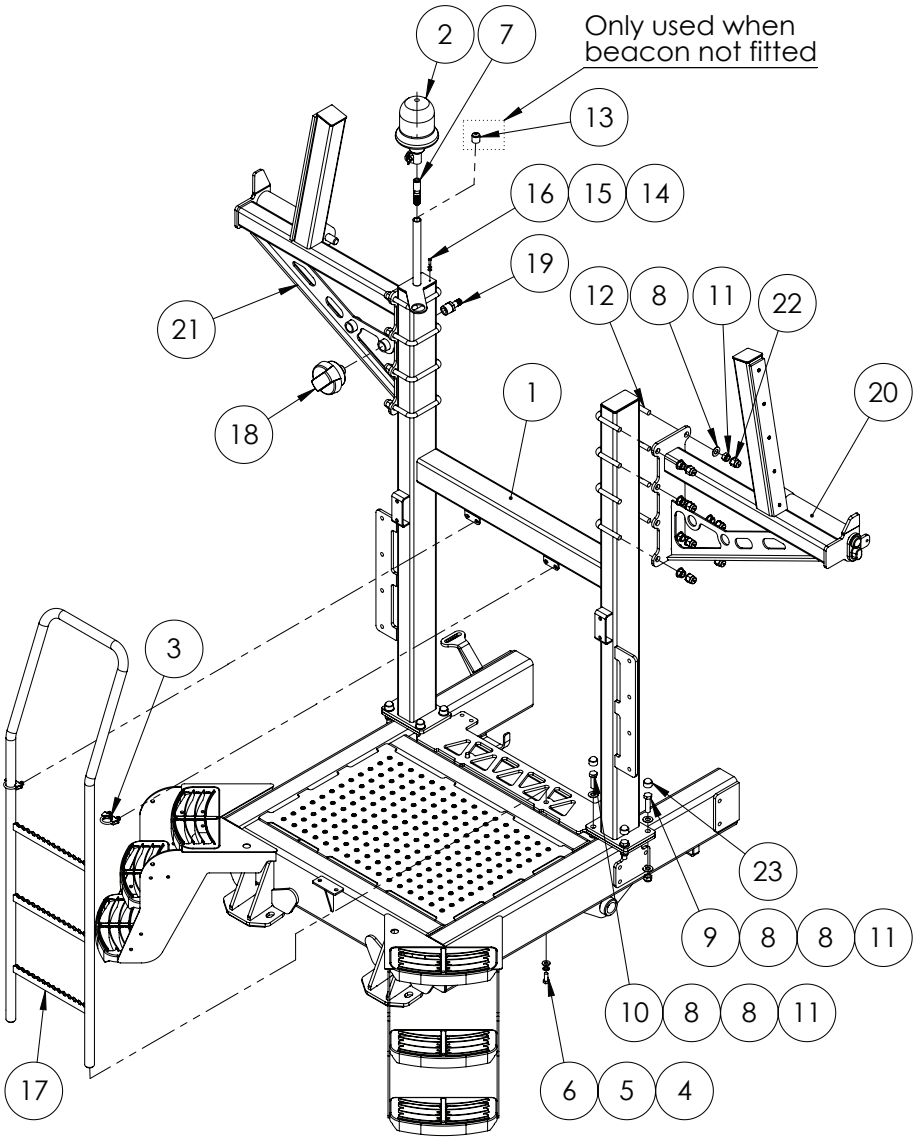

ITEM NO.	PART NUMBER	DESCRIPTION	QTY.
1	GA4654182	H frame suit prairie 7500L 2011	1
2	GA5048975	Beacon, Rotating, Amber, DIN A pole mount, H1 globe	1
3	GA5075120	Exhaust Clamp 36mm Heavy Duty	2
4	GA5000577	Washer 12mm Flat SS HD	2
5	GA5000575	Washer 12mm Spring SS	2
6	GA5000305	Set Screw M12 x 30 ZP GR8.8	2
7	GA5020411	Beacon insert, screw in	1
8	GA5001009	Washer 16mm Flat ZP Heavy Duty	28
9	GA5000939	Bolt M16 x 60 Black GR8.8	4
10	GA5000931	Bolt M16 x 50 ZP GR8.8	4
11	GA5001029	Nut M16 Nyloc ZP	20
12	GA5011277	U bolt, Square top, M16 x 127mm x 110mm	6
13	GA5052650	Cap Plastic 25.4mm Black	1

Continued over page

H-Frame - 7500/8500L

ITEM NO.	PART NUMBER	DESCRIPTION	QTY.
14	GA5004437	Washer 6mm Flat SS	1
15	GA5004447	Washer, 6mm, Spring, SS	1
16	GA5004053	BHCS M6 x 20 SS	1
17	GA4658161	Ladder, suit 2013 Prairie	1
18	GA5005259	Air filter, 1" BSP male thread	1
19	GA5077721	Hose barb, Straight, 1" male thread x 3/4" hose, Banjo	1
20	GA4904700-L	Boom Rest Left 7500L/8500L Prairie Tri-Tech	1
21	GA4904700-R	Boom Rest Right 7500L/8500L Prairie Tri-Tech	1
22	GA5054685	Cap M16 hex nut cover	16
23	GA5075080	Hex nut protection cap suit M16, Black	8

Boom Rest - 7500/8500L

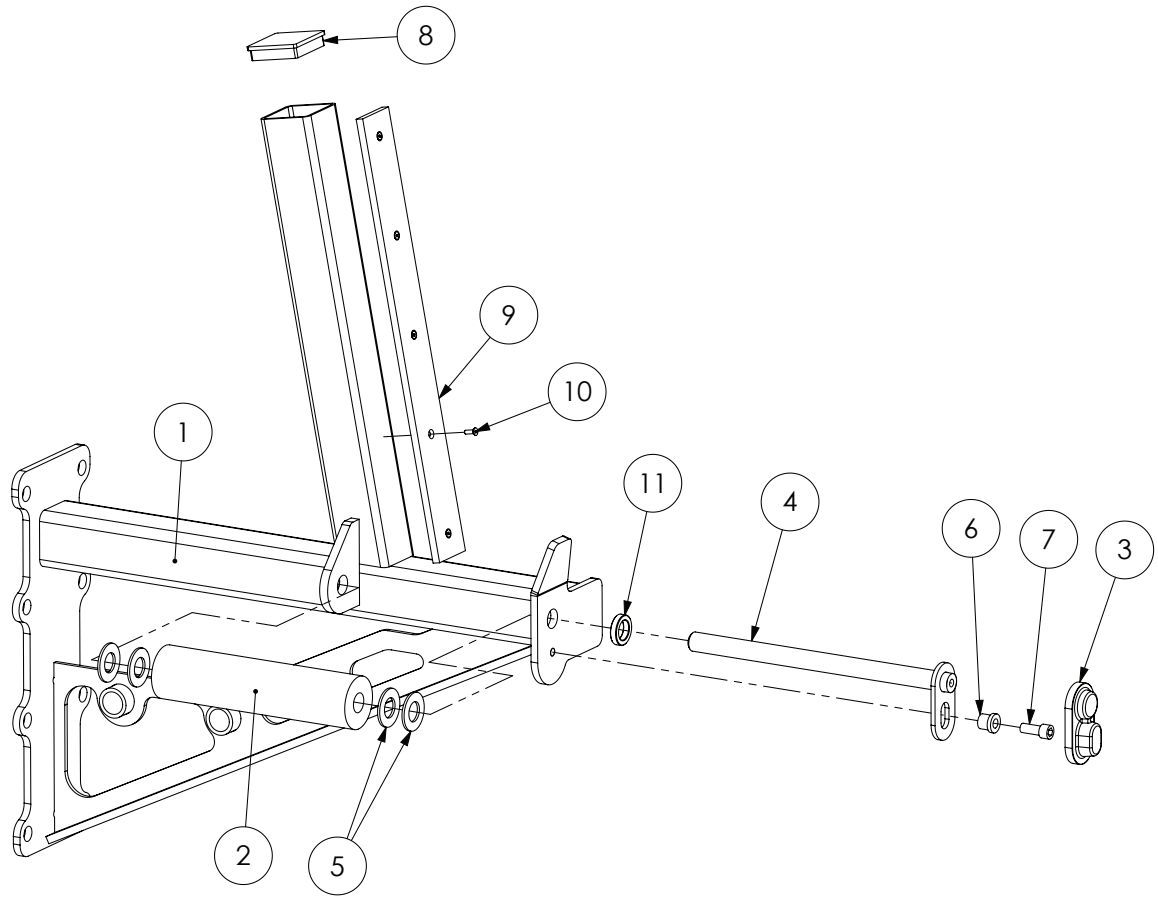

ITEM NO.	PART NUMBER	DESCRIPTION	QTY.
-	GA4904700-L	Boom Rest Left 7500L/8500L Prairie Tri-Tech - Assembly	-
-	GA4904700-R	Boom Rest Right 7500L/8500L Prairie Tri-Tech - Assembly	-
1	GA4659671	Boom Rest Prairie RH 7500 8500	1
	GA4659676	Boom Rest Prairie LH 7500 8500	1
2	GA5070700	Roller Boom Rest Prairie	1
3	GA5067885	Pin cover, Black, clip on, plastic	1
4	GA4658745	Pin suit Boom rest roller	1
5	GA5017681	Washer 1" x 2" 7g Flat Thin SS	4
6	MACH0152	Bush with shoulder, 12.3 ID x 25 OD x 21 long	1
7	GA5000307	SHCS M12 x 30 ZP GR12.9	1
8	GA5052345	End cap, Insert, 75 x 75 mm, black, plastic	1
9	GA5066630	Wear strip, 65 wide x 590 long x 10mm thick, Polystone 7000SR	1
10	GA5051230	CSCS M5 x 16 Countersink SS	5
11	GA4572135	Spacer bush, 40 OD x 25.8 ID x 9mm thick, Paralift arm spacer	1

ISOBUS Node Cover

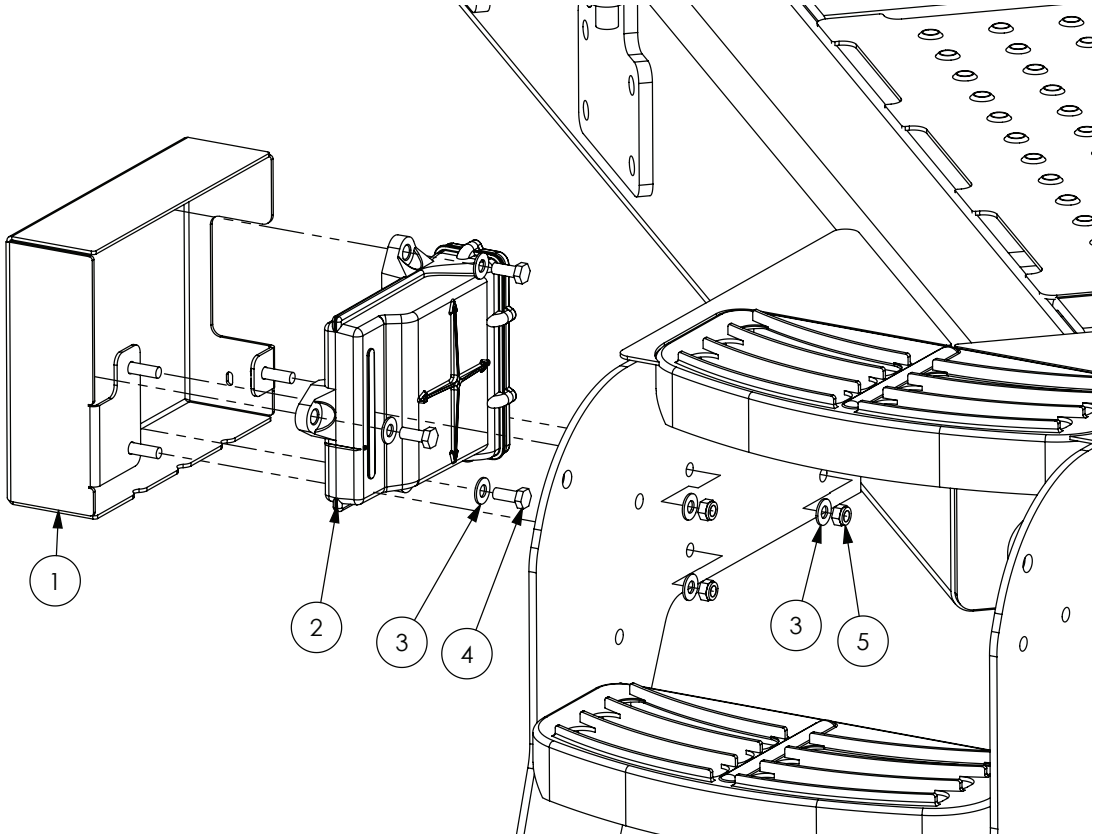

ITEM NO.	PART NUMBER	DESCRIPTION	QTY.
1	GA4660275	Cover, ISO Node Welded Prairie	1
2	GA5071380	Node, ECU ISO Bus CAN, Product controller, Raven	1
3	GA5003643	Washer 8mm Flat SS HD	6
4	GA5004085	Bolt M8 x 20 ZP GR8.8	3
5	GA5052590	Nut M8 Nyloc SS	3

Chapter 2

PUMPS

Zeta 260 - PTO Shaft Drive

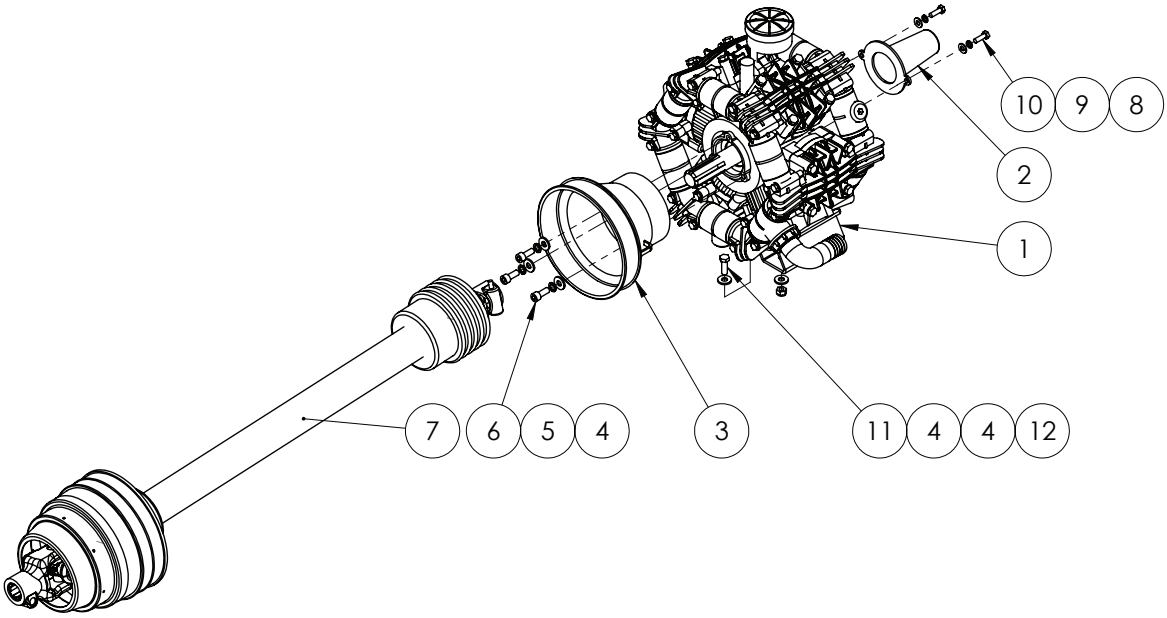

ITEM NO.	PART NUMBER	DESCRIPTION	QTY.
1	GA5054505	Pump, Diaphragm type, Zeta 260, Through shaft PTO drive, Udor	1
2	GA5013499	Guard, Plastic, PTO protector suit rear of 2C pumps	1
3	GA5076401	PTO Cover, Black, Front, suit 170 and 260 spray pumps	1
4	GA5000117	Washer 10mm Flat SS HD	11
5	GA5000137	Washer 10mm Spring SS	3
6	GA5071085	SHCS M10 x 25 ZP GR12.9	3
7	GA5013511	PTO Shaft wide angle suit Advance EF 1.05m	1
	GA5060830	PTO shaft standard angle 1.05m, suits EF special	
8	GA5003643	Washer 8mm Flat SS HD	2
9	GA5004919	Washer 8mm Spring SS	2
10	GA5004711	Bolt M8 x 25 ZP GR8.8	2
11	GA5065455	Bolt M10 x 30 ZP GR8.8	4
12	GA5000141	Nut M10 Nyloc ZP	4

ZETA COVER KIT

PART NUMBER	DESCRIPTION
GA5023075	Cover kit, Suit Zeta 170 & 260 PTO pump

Zeta 260 - PTO Shaft Drive Assembly

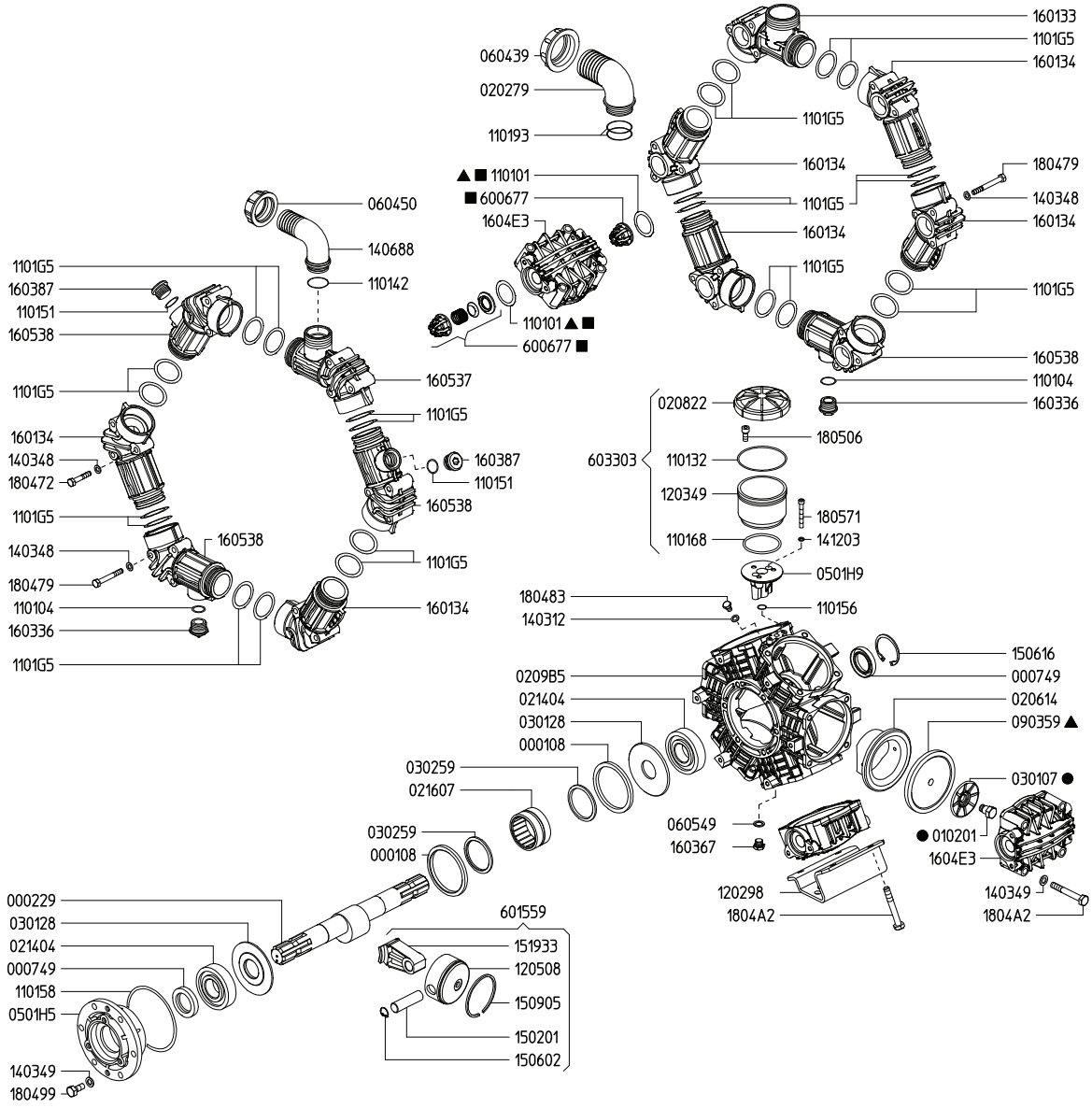

PUMP ASSEMBLY

PART NUMBER	DESCRIPTION	QTY.
GA5054505	Pump, Diaphragm type, Zeta 260, Through shaft PTO drive, Udor	1

PUMP SERVICE PARTS

PART NUMBER	DESCRIPTION
GA5077793	Pump Diaphragm Kit suit Zeta 260 and RO250 Udor Pumps
GA5077792	Pump rebuild kit, includes diaphragms, seals & valves, Suits both Zeta 260 and RO250 in PTO and Hyd Drive

Zeta 260 - Hydraulic Drive

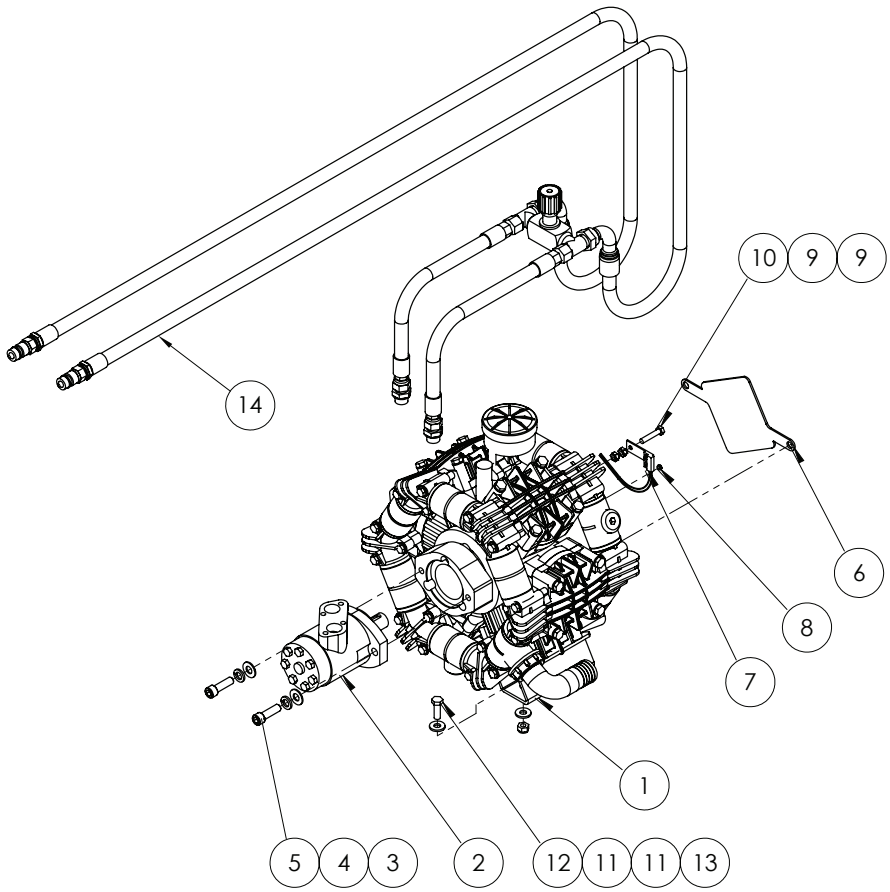

ITEM NO.	PART NUMBER	DESCRIPTION	QTY.
1	GA5054500	Pump Zeta 260 MI-1	1
2	GA5047515	Motor, hydraulic, 80cc/rev, 25.4mm shaft, Suit spray pump drive	1
3	GA5000577	Washer 12mm Flat SS HD	2
4	GA5000575	Washer 12mm Spring SS	2
5	GA5000321	SHCS M12 x 40 ZP GR12.9	2
6	PUMPCOVER250	Plate, Rear Pump Shaft Cover, RO250, Zeta 260 and 300	1
7	GA5076307	Sensor, Spray pump RPM, suit 4400 / 4070, Raven	1
8	GA5016169	Magnet, High strength, 12mm diameter x 1.5mm thick	1
9	GA5011499	Nut M8 Hex ZP	2
10	GA5048655	Bolt M8 x 40 ZP GR8.8	1
11	GA5000117	Washer 10mm Flat SS HD	8
12	GA5065455	Bolt M10 x 30 ZP GR8.8	4
13	GA5000141	Nut M10 Nyloc ZP	4
14	GA5067186*	Hose assembly kit hydraulic drive suit hose support MY10	1

* Sub-assembly on following pages

Zeta 260 - Hydraulic Drive Assembly

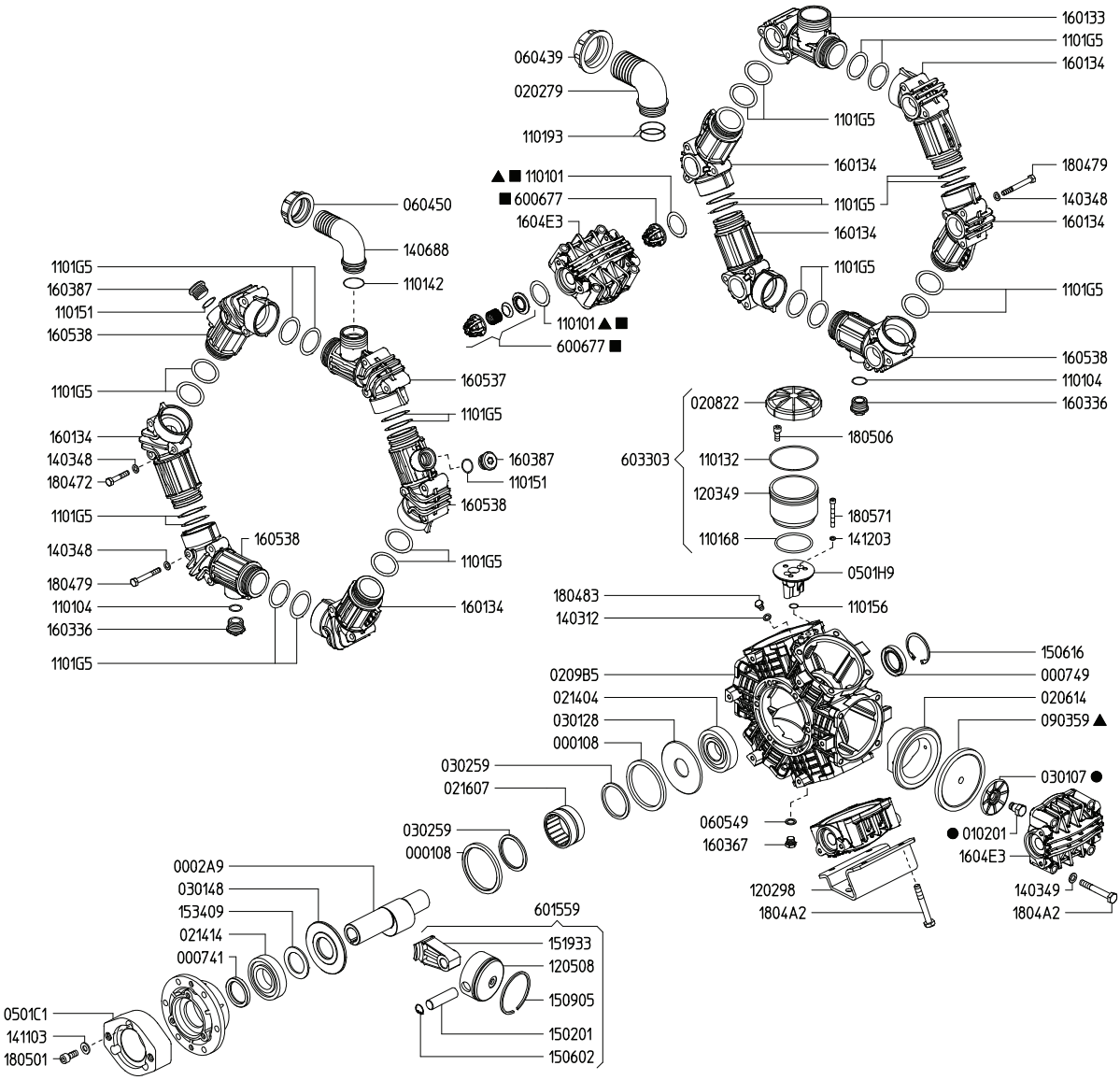

PUMP ASSEMBLY

PART NUMBER	DESCRIPTION	QTY.
GA5054500	Pump Zeta 260 MI-1	1

PUMP SERVICE PARTS

PART NUMBER	DESCRIPTION
GA5077793	Pump Diaphragm Kit suit Zeta 260 and RO250 Udor Pumps
GA5077792	Pump rebuild kit, includes diaphragms, seals & valves, Suits both Zeta 260 and RO250 in PTO and Hyd Drive
GA5023115	Seal kit, 60cc & 80cc hydraulic motor, GA5009525 and GA5047515

Zeta 300 - PTO Shaft Drive Assembly

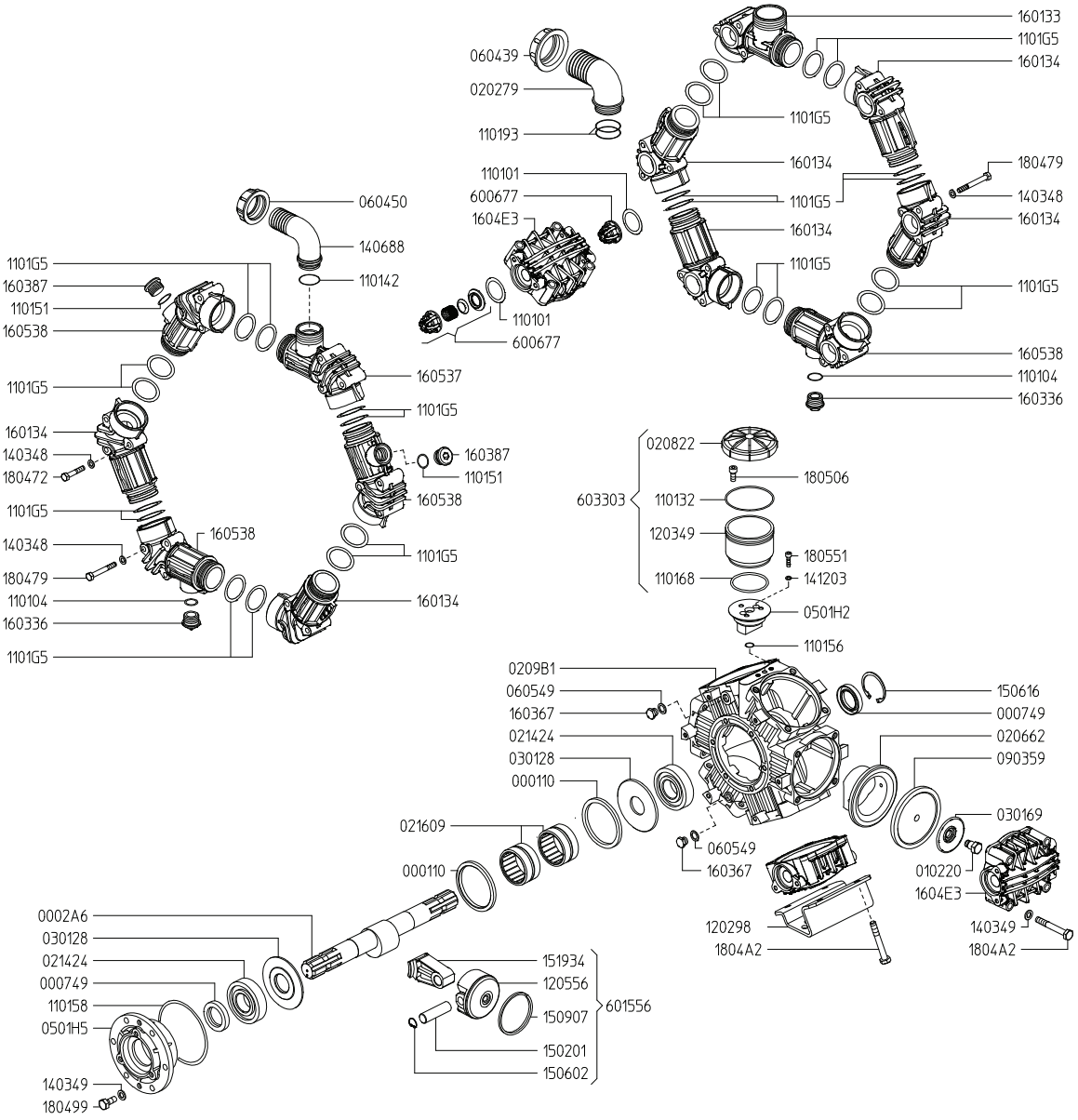

PUMP ASSEMBLY

PART NUMBER	DESCRIPTION	QTY.
GA5054525	Pump Zeta 300 PTO TS 2C	1

PUMP SERVICE PARTS

PART NUMBER	DESCRIPTION
GA5077793	Pump Diaphragm Kit suit Zeta 300 Pumps
GA5077792	Pump rebuild kit, includes diaghrams, seals & valves, Zeta 300
GA5023115	Seal kit, 60cc & 80cc hydraulic motor, GA5009525 and GA5047515

Zeta 300 - Hydraulic Drive - 4000-7500L

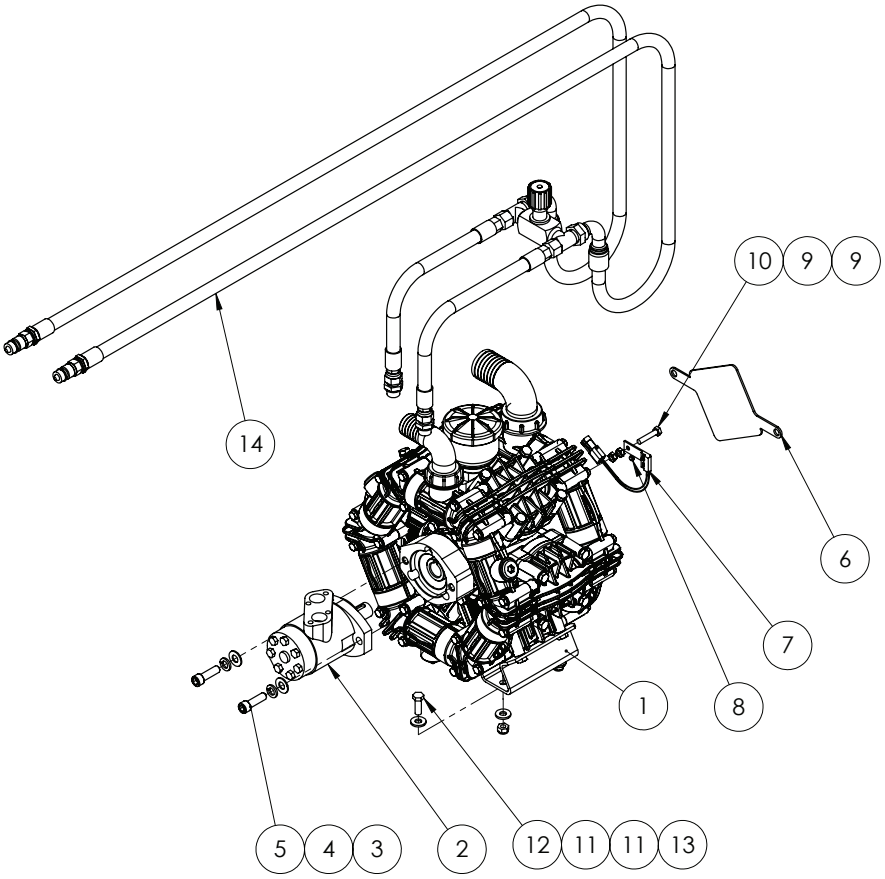

ITEM NO.	PART NUMBER	DESCRIPTION	QTY.
1	GA5054520*	Pump Zeta 300 MI-25	1
2	GA5020210	Hydraulic Motor, 80cc 25.0mm, 8mm keyway	1
3	GA5000577	Washer 12mm Flat SS HD	2
4	GA5000575	Washer 12mm Spring SS	2
5	GA5000321	SHCS M12 x 40 ZP GR12.9	2
6	PUMPCOVER250	Plate, Rear Pump Shaft Cover, RO250, Zeta 260 and 300	1
7	GA5076307	Sensor, Spray pump RPM, suit 4400 / 4070, Raven	1
8	GA5016169	Magnet, High strength, 12mm diameter x 1.5mm thick	1
9	GA5011499	Nut M8 Hex ZP	2
10	GA5048655	Bolt M8 x 40 ZP GR8.8	1
11	GA5000117	Washer 10mm Flat SS HD	8
12	GA5065455	Bolt M10 x 30 ZP GR8.8	4
13	GA5000141	Nut M10 Nyloc ZP	4
14	GA5067186*	Hose assembly kit hydraulic drive suit hose support MY10	1

* Sub-assembly on following pages

Zeta 300 - Hydraulic Drive - 8500L Only

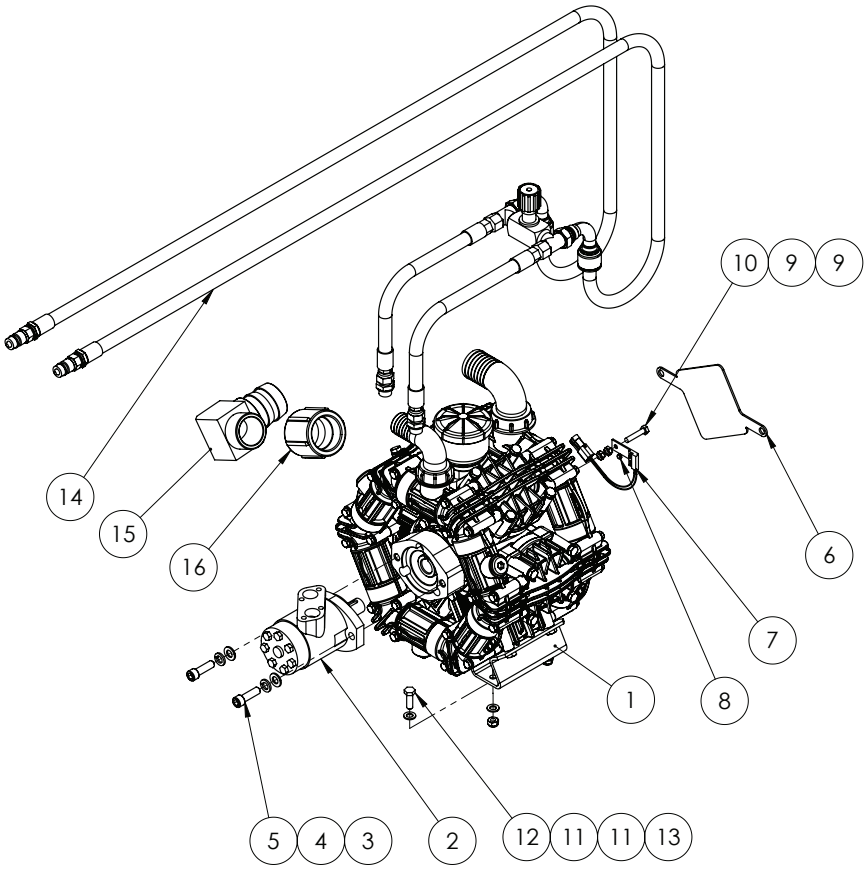

ITEM NO.	PART NUMBER	DESCRIPTION	QTY.
1	GA5054520*	Pump Zeta 300 MI-25	1
2	GA5020210	Hydraulic Motor, 80cc 25.0mm, 8mm keyway	1
3	GA5000577	Washer 12mm Flat SS HD	2
4	GA5000575	Washer 12mm Spring SS	2
5	GA5000321	SHCS M12 x 40 ZP GR12.9	2
6	PUMPCOVER250	Plate, Rear Pump Shaft Cover, RO250, Zeta 260 and 300	1
7	GA5076307	Sensor, Spray pump RPM, suit 4400 / 4070, Raven	1
8	GA5016169	Magnet, High strength, 12mm diameter x 1.5mm thick	1
9	GA5011499	Nut M8 Hex ZP	2
10	GA5048655	Bolt M8 x 40 ZP GR8.8	1
11	GA5000117	Washer 10mm Flat SS HD	8
12	GA5065455	Bolt M10 x 30 ZP GR8.8	4
13	GA5000141	Nut M10 Nyloc ZP	4
14	GA5067186*	Hose assembly kit hydraulic drive suit hose support MY10	1
15	L081A	Plumbing fitting, Hose barb, Elbow, 90 degree, 2” male thread x 2 1/2” hose	1
16	GA5077641	Coupling, socket, 2” female thread	1

* Sub-assembly on following pages

Zeta 300 - Hydraulic Drive Assembly

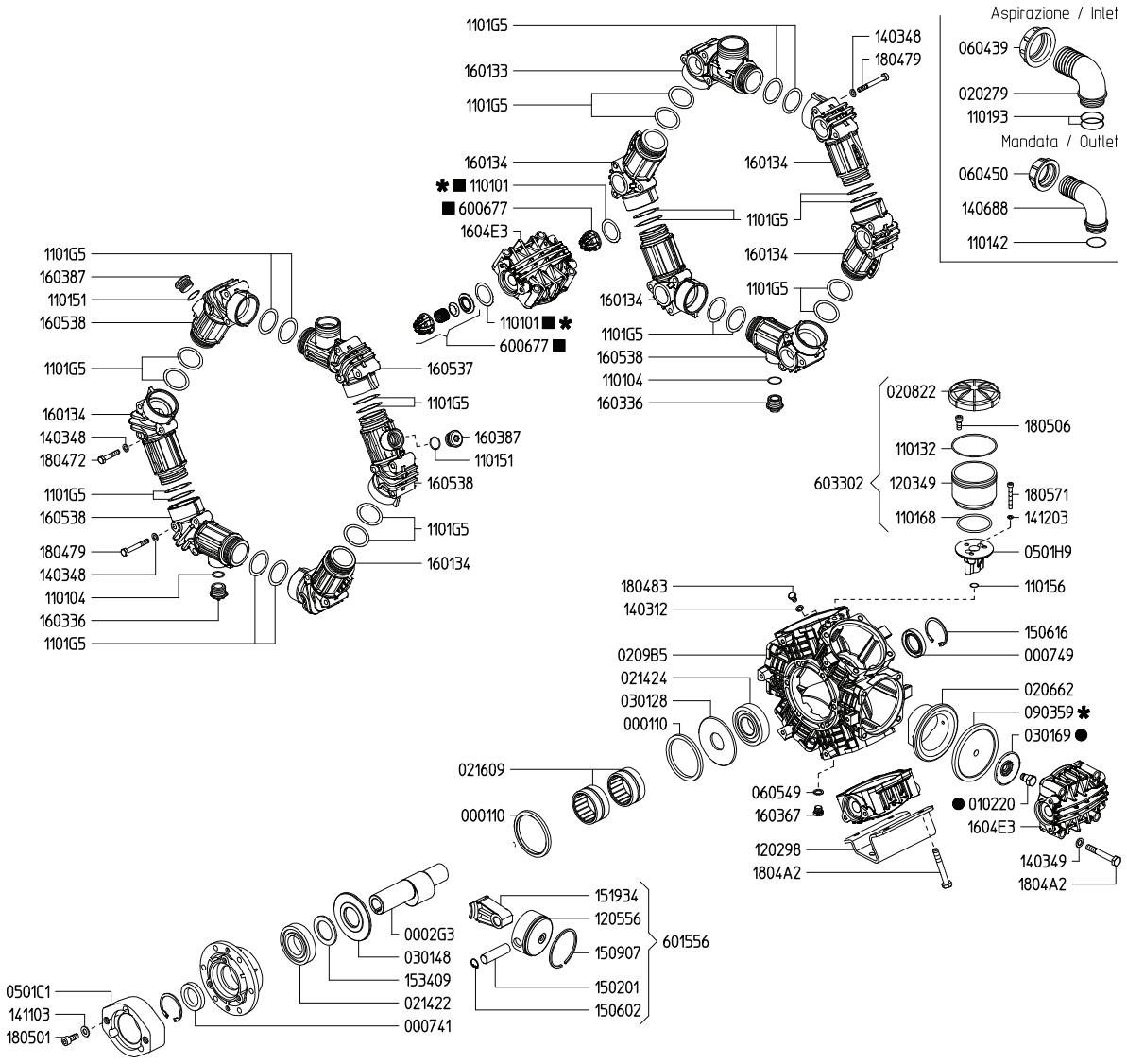

PUMP ASSEMBLY

PART NUMBER	DESCRIPTION	QTY.
GA5054520	Pump Zeta 300 MI-25	1

PUMP SERVICE PARTS

PART NUMBER	DESCRIPTION
GA5077793	Pump Diaphragm Kit suit Zeta 300 Pumps
GA5077792	Pump rebuild kit, includes diaghrams, seals & valves, Zeta 300
GA5023115	Seal kit, 60cc & 80cc hydraulic motor, GA5009525 and GA5047515

Hydraulic Drive Conversion Kit

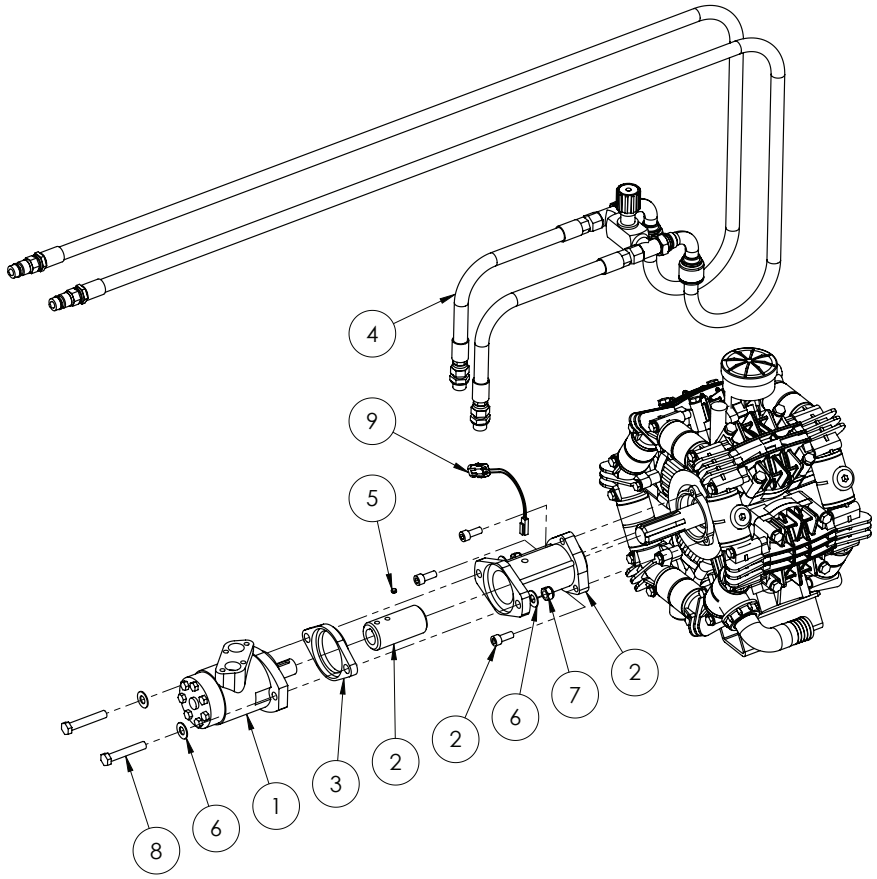

ITEM NO.	PART NUMBER	DESCRIPTION	QTY.
1	GA5047515	Motor, hydraulic, 80cc/rev, 25.4mm shaft, Suit spray pump drive	1
2	GA5077663	Adaptor, Hydraulic motor to Udor PTO pump only, kit includes housing, coupler, 2 grub screws, 3 bolts	1
3	GA4552100	Spacer plate, Suit adapter PTO to hydraulic drive, Udor	1
4	GA5067186*	Hose assembly kit hydraulic drive suit hose support MY10	1
5	GA5016169	Magnet, High strength, 12mm diameter x 1.5mm thick	1
6	GA5000577	Washer 12mm Flat SS HD	4
7	GA5012461	Nut M12 Nyloc ZP	2
8	GA5000347	Bolt M12 x 70 ZP GR8.8	2
9	GA5076307	Sensor, Spray pump RPM, suit 4400 / 4070	1

* Sub-assembly on following pages

Note: Machines fitted with 70 series pump RPM monitors use the parts below:

RPM MONITOR & SPEED SENSOR

PART NUMBER	DESCRIPTION	QTY.
GA5077195	70 series RPM monitor & speed sensor - Complete	1
GA5076542	Teejet speed sensor	1

Hydraulic Hose Kit

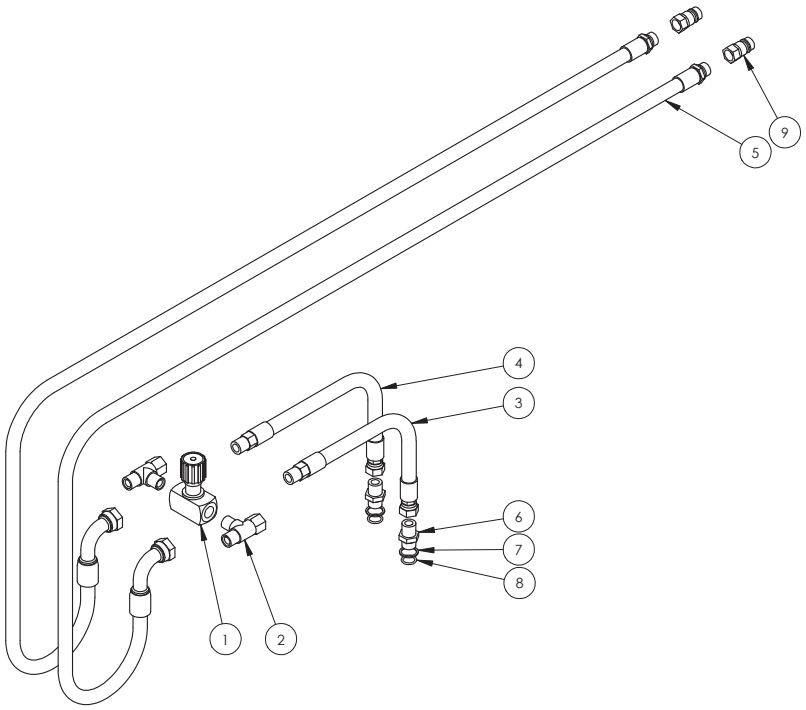

GA5067186 Hose assembly kit hydraulic drive suit hose support MY10

ITEM NO.	PART NUMBER	DESCRIPTION	QTY.
1	GA5018221	Valve check needle throttle 1/2”	1
2	GA3500200	Hydraulic adaptor, Tee, 1/2” BSPT male x 1/2” BSPT male x 1/2” BSPP female swivel	2
3	GA4922110	Hyd hose suit EF MY10 pump end short	1
4	GA4922115	Hyd hose suit EF MY10 pump end long	1
5	GA4922105	Hyd hose suit EF MY10 tractor end	2
6	GA3500310	Hydraulic adaptor, Nipple, 1/2” BSPT male x 1/2” BSPP male	2
7	GA5076891	Ring Retaining BSPP 1/2”	2
8	GA5078121	O-Ring BSPP 1/2”	2
9	GA5078000	Quick connect fitting, 1/2” male tip x 1/2” female thread	2
-	GA5052365	Cover, Green plastic, Suit GA5078000	2

Pressure Flow Compensator

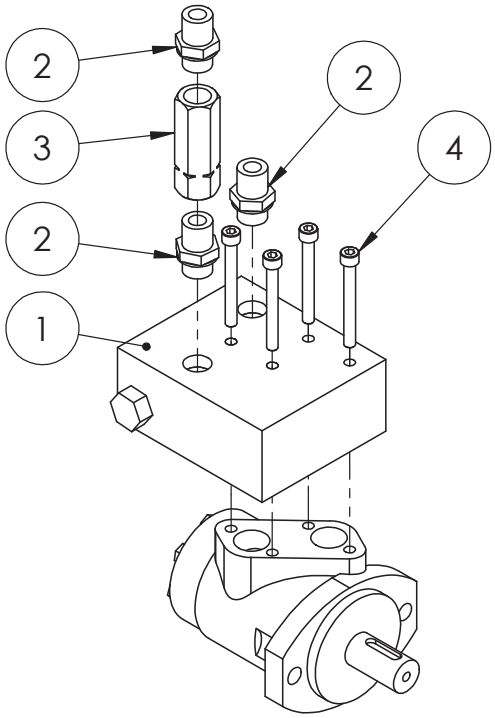

ITEM NO.	PART NUMBER	DESCRIPTION	QTY.
1	GA5049425	Manual flow control	1
2	GA3500310	Hydraulic adaptor, Nipple, 1/2" BSPT male x 1/2" BSPP male	3
3	GA5007060	Valve, Check, Hydraulic, 1/2” BSPP female inlet & outlet, 45L/min flow, Maximum 320bar	1
4	GA5049430	SHCS M8 x 70 ZP GR12.9	4

Chapter 3

FLUSH TANK

400L Flush Tank Frame

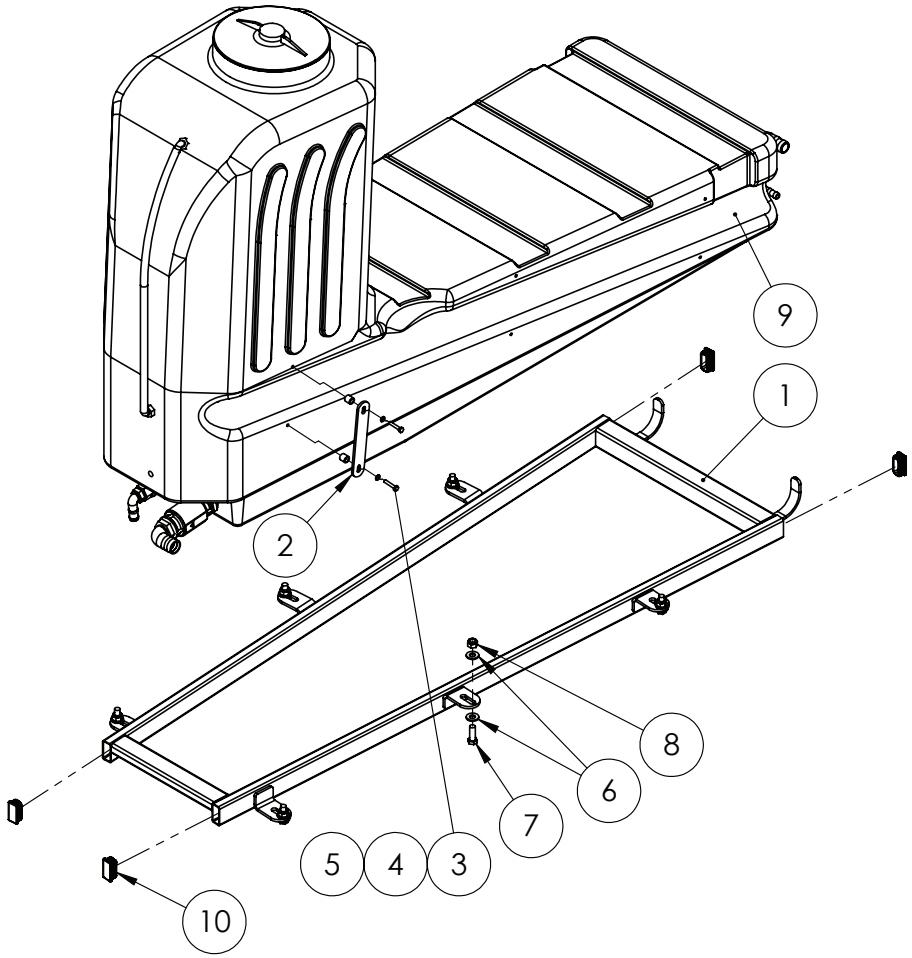

ITEM NO.	PART NUMBER	DESCRIPTION	QTY.
1	GA4654320	Rinse tank frame advance	1
2	F70681A	Hose Strap for Belly Tank	2
3	GA5011405	Bolt M6 x 35 ZP GR8.8	4
4	GA5004437	Washer 6mm Flat SS	4
5	GA4552075	Crush tube, 10.2 ID x 15 OD x 15mm long	4
6	GA5000577	Washer 12mm Flat SS HD	12
7	GA5000311	Set screw, M12 x 35, ZP GR 8.8	6
8	GA5012461	Nut M12 Nyloc ZP	6
9	*	400L Flush Tank Assembly	1
10	GA5003733	Tube Insert 50 x 25mm rectangular 0.83	4

* Sub-assembly on following pages

400L Flush Tank Assembly

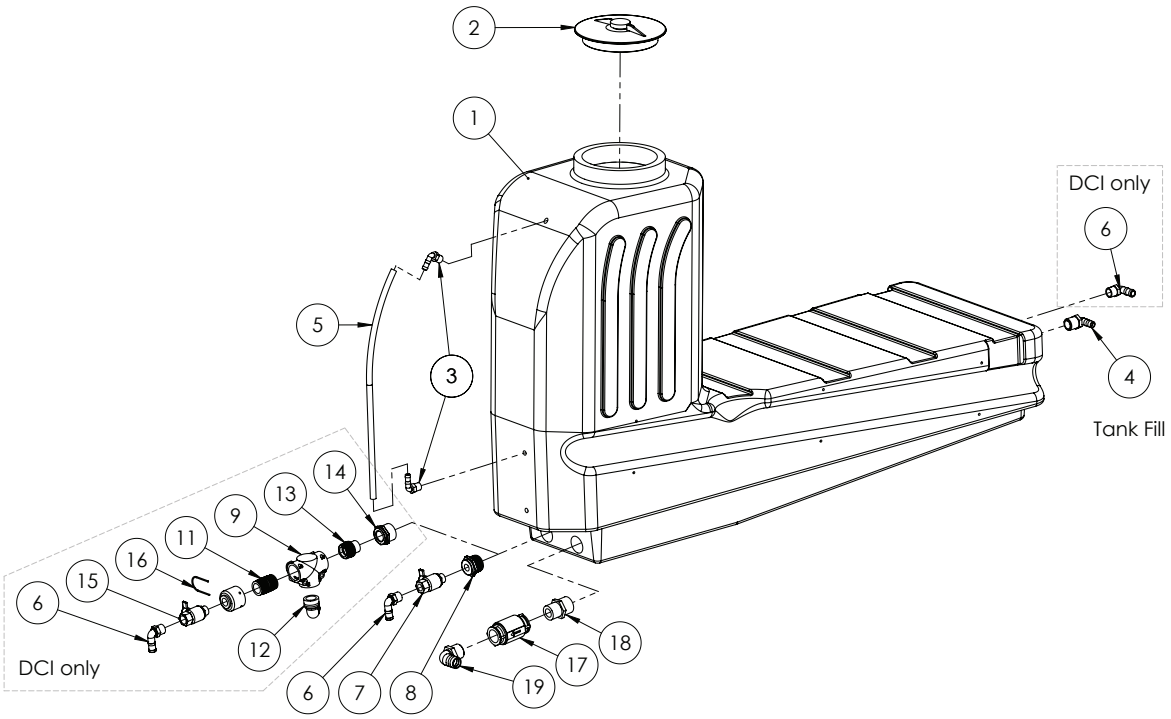

ITEM NO.	PART NUMBER	DESCRIPTION	QTY.
1	GA5018367	Tank 400lt Underbelly, Bare	1
2	GA5076882	Lid, Tank, 255 diameter, With breather	1
3	GA5077708	Hose barb, Elbow, 90 degree, 1/2” male thread x 1/2” hose, Banjo	2
4	GA5077719	Hose barb, Elbow, 90 degree, 1” male thread x 3/4” hose, Banjo	1
5	GA2000209	12mm sight tube (cut 660mm)	1
6	GA5077717	Hose barb, Elbow, 90 degree, 3/4” male thread x 3/4” hose, Banjo	3
7	GA5018315	Valve, Ball, 20mm, 3/4" male, female, Black Butterfly handle, Brass	1
8	GA5078017	Reducing bush, 1 1/2” male thread x 3/4” female thread, Banjo	1
9	GA5065555	Tee, AS40 female, no M8 inserts	1
10	GA4582410	Cap Altek AS40 with 3/4" BSPP Female Thread	1
11	GA5065735	Plug in hose tail AS40/AS40	1
12	GA5065620	Plug in hose tail AS40/33/90 degree	1
13	GA5065600	Plumbing adaptor, AS40 male x 1” male thread, Altek	1
14	GA5078018	Reducing bush, 1 1/2” male thread x 1” female thread, Banjo	1
15	GA5018315	Valve, Ball, 20mm, 3/4" male, female, Black Butterfly handle, Brass	1
16	GA5065690	Safety pin AS40	3
17	GA5017361	Valve non-return 1 1/4”	1
18	GA5078093	Reducing nipple, 1 1/2” male thread x 1 1/4” male thread, Banjo	1
19	GA5077730	Hose barb, Elbow, 90 degree, 1 1/4" male thread x 1 1/4" hose, Banjo	1

Chapter 4

RIGHT HAND POD

RH POD - Mounting

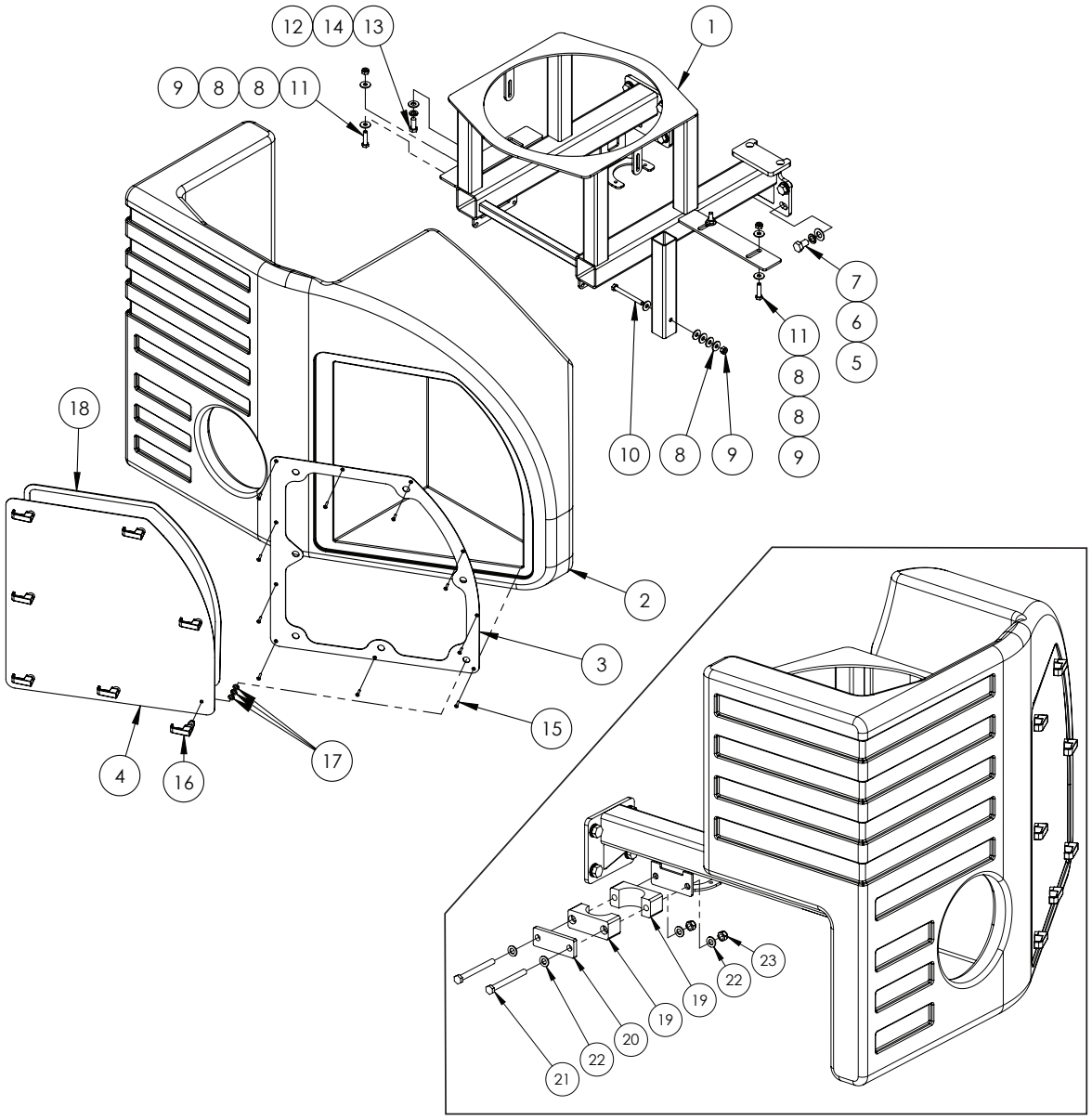

ITEM NO.	PART NUMBER	DESCRIPTION	QTY.
1	GA4654410	Pod Frame Advance Right Hand	1
2	GA5018375	Right hand Side Module	1
3	GA4522585	RHS pod cover door inner	1
4	GA4522580	RHS pod cover door outer	1

Continued over page

RH POD - Mounting

ITEM NO.	PART NUMBER	DESCRIPTION	QTY.
5	GA5001043	Washer 16mm Flat SS HD	8
6	GA5000961	Washer 16mm Spring ZP	8
7	GA5000903	Bolt M16 x 25 ZP GR8.8	8
8	GA5002627	Washer, 3/8" ID x 1 1/8" OD, High Tensile	11
9	GA5000141	Nut M10 Nyloc ZP	4
10	GA5011139	Bolt M10 x 100 ZP GR4.6	1
11	GA5006071	Bolt M10 x 40 ZP GR10.9	3
12	GA5000577	Washer 12mm Flat SS HD	1
13	GA5000307	SHCS M12 x 30 ZP GR12.9	1
14	GA5000575	Washer 12mm Spring SS	1
15	GA5014819	Screw 10G x 1" Self Tapper SS	10
16	GA5066600	Rawl action latch suit Advance pod door	7
17	GA5003643	Washer 8mm Flat SS HD	21
18	GA5016473	Tape PM foam 6.4 x 18 L/Density (cut 2200mm long)	1
19	GA5070355	Single Clamp Jaw 65mm diameter	2
20	GA5070360	Single Clamp Top Plate	1
21	GA5000265	Bolt M12 x 120 GR8.8 ZP	2
22	GA5000577	Washer 12mm Flat SS HD	4
23	GA5012461	Nut M12 Nyloc ZP	2

RH POD - Internal Configurations

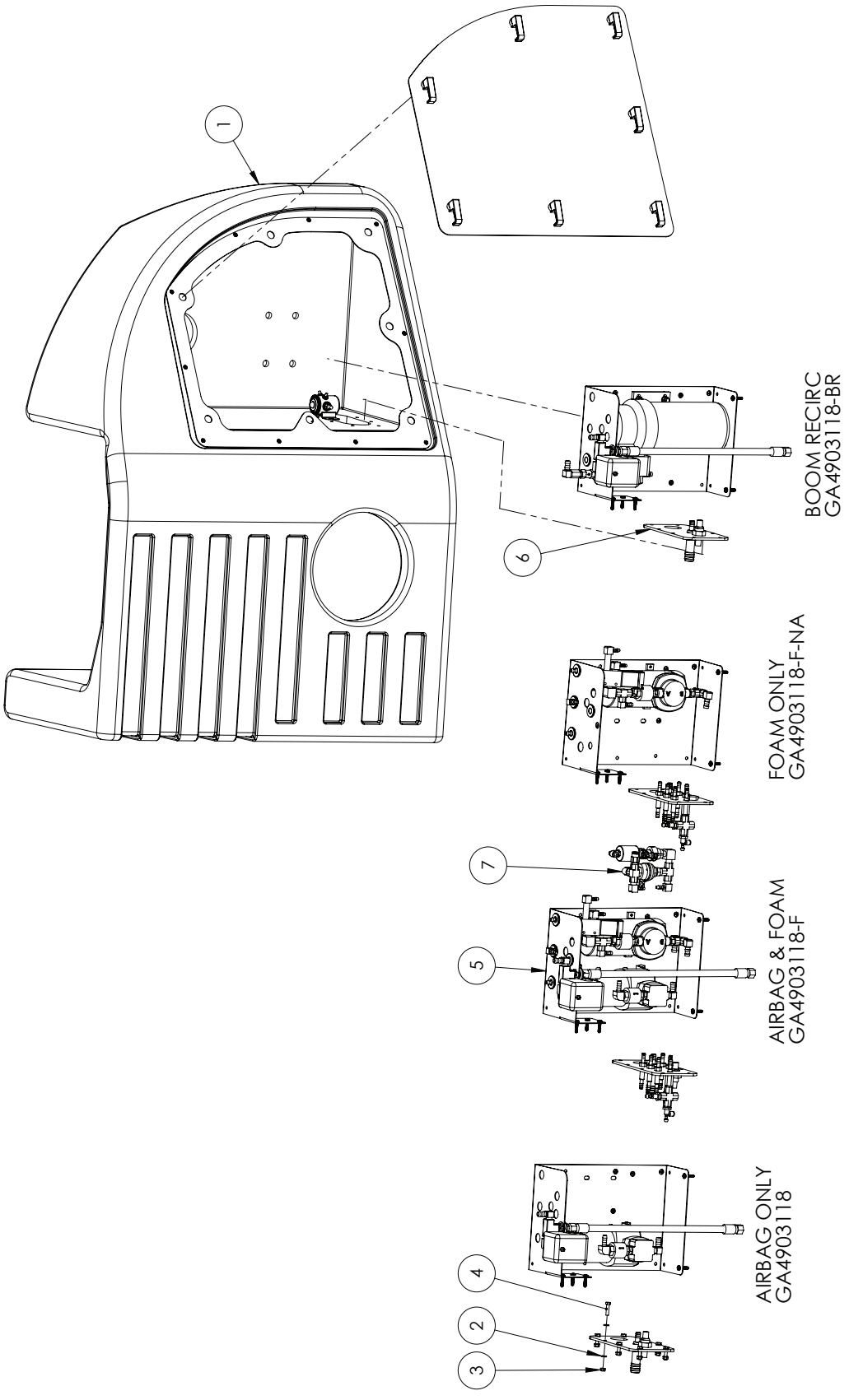

Continued over page

RH POD - Internal Configurations

ITEM NO.	PART NUMBER	DESCRIPTION	QTY.
1	GA5018375	Right hand Side Module	1
2	GA5004437	Washer 6mm Flat SS	16
3	GA5048115	Nut M6 Nyloc ZP	8
4	GA5004073	Bolt M6 x 25 ZP GR8.8	8
5	*	Airbag Compressor Assembly	1
	*	Airbag & Foam Compressor Assembly	
	*	Foam Compressor Assembly	
	*	RapidFire & Airbag Compressor Assembly	
6	*	RH POD Manifold, Airbag only Assembly	1
	*	RH POD Manifold, Airbag & Foam Assembly	
	*	RH POD Manifold, Foam only Assembly	
7	*	Foam Marker Exhaust Valve Assembly	1

* Sub-assembly on following pages

RH POD Manifold - Airbag & Foam

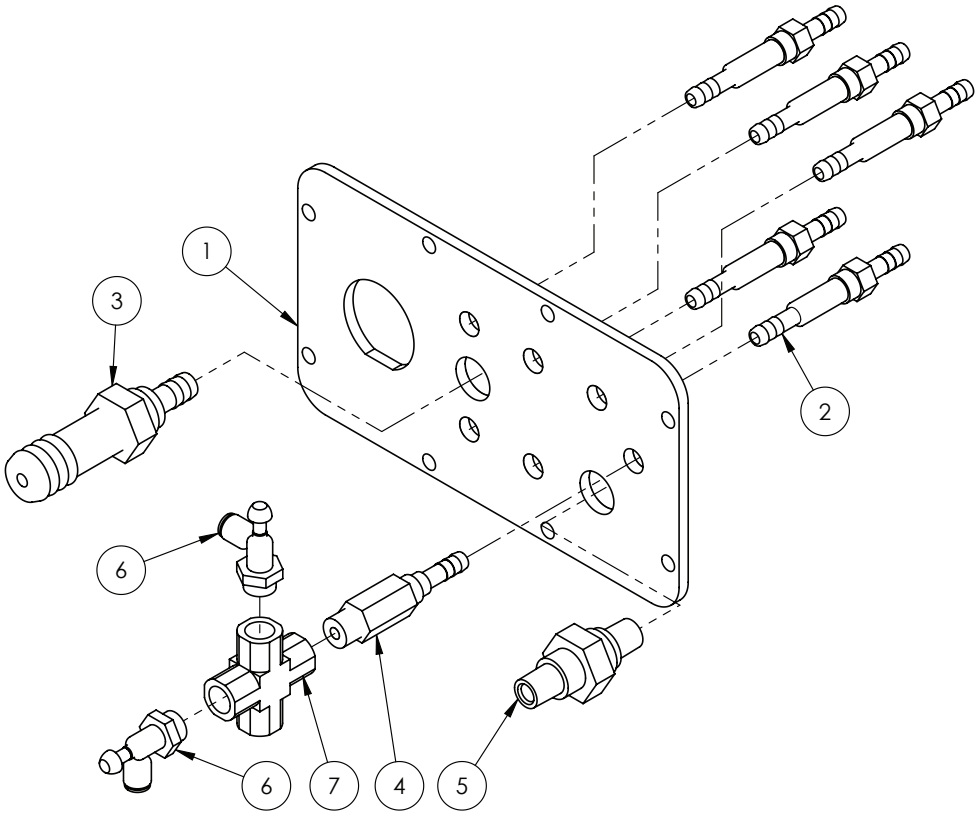

ITEM NO.	PART NUMBER	DESCRIPTION	QTY.
1	F70784A	Plumbing Manifold Plate Non Joystick suit air bag and foam	1
2	MACH0128	Adaptor, 1/4” barb to 1/4” barb	5
3	MACH0129	Barb, 3/4” to 3/8”	1
4	MACH0130	Barb, 1/4” to 1/4” BSPT	1
5	GA4582465	1/4" BSPT Nipple, SS, suit RH Pod Manifold	1
6	GA5015643	Valve, Needle, 6mm push type inlet x 1/8” male thread inlet, Legris	2
7	GA3500246	Hydraulic adaptor, Cross, 1/4” BSPT female	1

RH POD Manifold - Foam Only

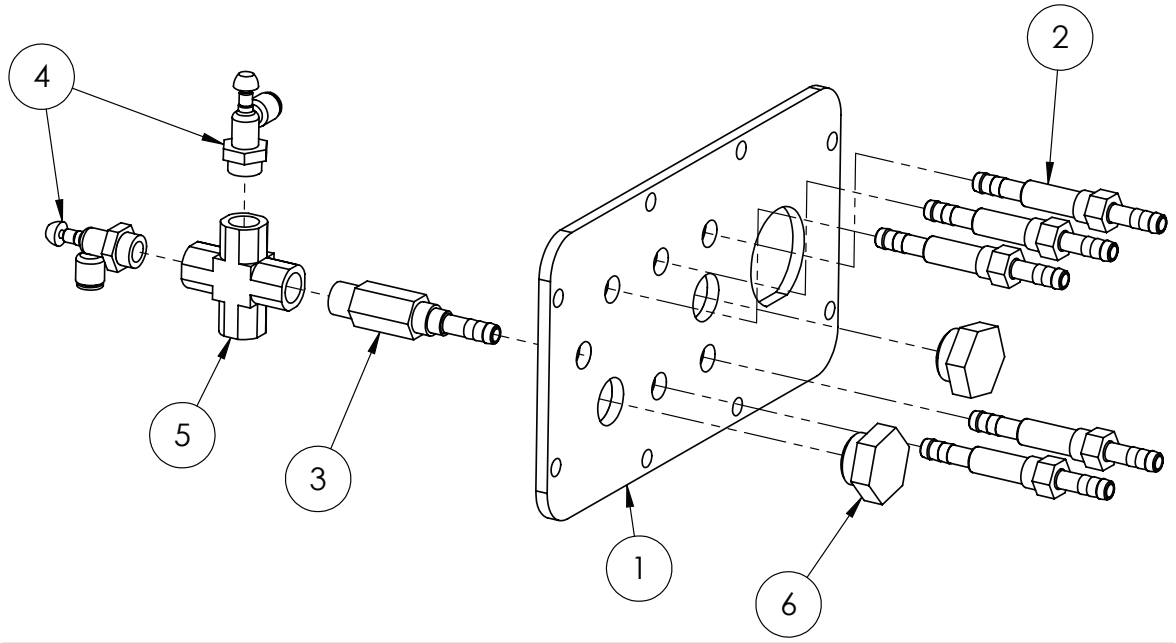

ITEM NO.	PART NUMBER	DESCRIPTION	QTY.
1	F70784A	Plumbing Manifold Plate Non Joystick suit air bag and foam	1
2	MACH0128	Adaptor 1/4” barb to 1/4” barb	5
3	MACH0130	Barb 1/4” to 1/4” BSPT	1
4	GA5015643	Valve, Needle, 6mm push type inlet x 1/8” male thread inlet, Legris	2
5	GA3500246	Hydraulic adaptor, Cross, 1/4” BSPT female	1
6	GA4582480	Plug M20 x 1.5 fine	2

RH POD Manifold - Airbag Only

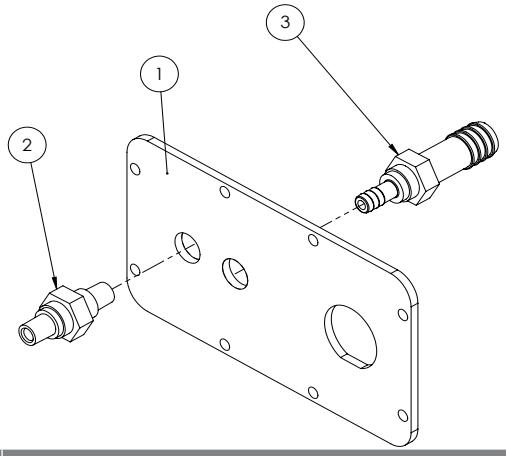

ITEM NO.	PART NUMBER	DESCRIPTION	QTY.
1	GA4524715	Plumbing Manifold Plate EVO air bag only	1
2	GA4582465	1/4" BSPT Nipple, SS, suit RH Pod Manifold	1
3	MACH0129	Barb 3/4” to 3/8”	1

Airbag Compressor Mounting

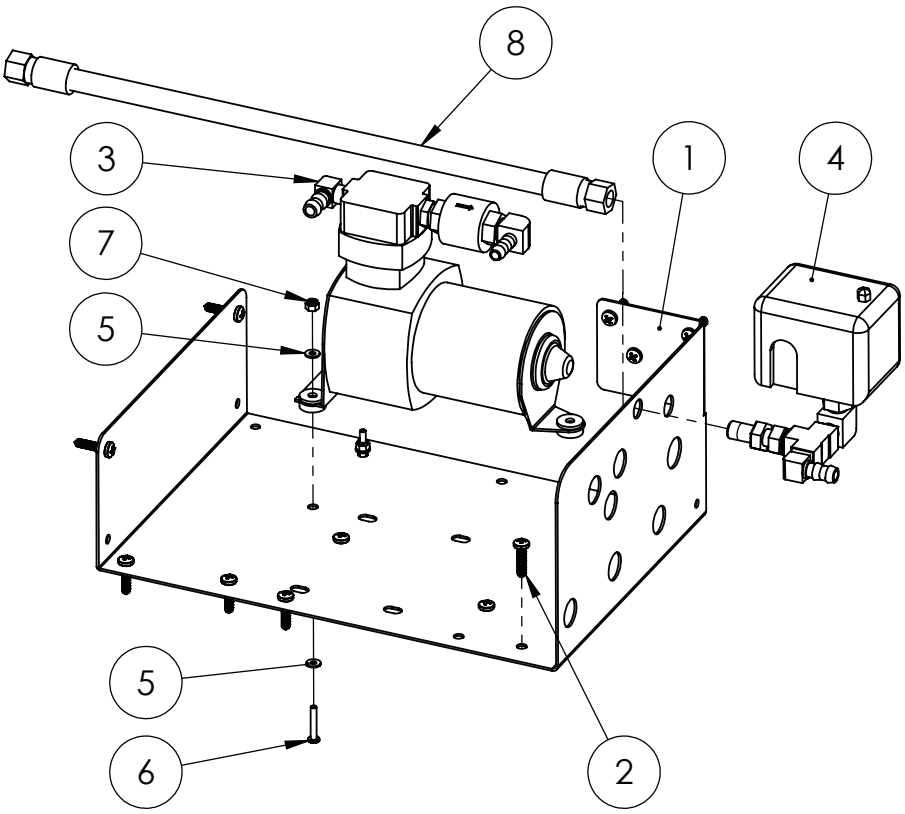

ITEM NO.	PART NUMBER	DESCRIPTION	QTY.
1	F70785A	Foam marker/airbag comp plate	1
2	GA5000527	Screw, Pan head, 12G x 25mm, SS	11
3	*	Airbag Compressor, Sub-assembly	1
4	*	Airbag Compressor Pressure switch, Sub-Assembly	1
5	GA5020510	Washer 4mm Flat SS	6
6	GA5049020	Bolt M4 x 25 Pan Head SS	3
7	GA5049025	Nut M4 Nyloc SS	3
8	GA4906200	Hyd Hose Airbag Compressor Assembly MY13	1

* Sub-assembly on following pages

Airbag Compressor Fittings

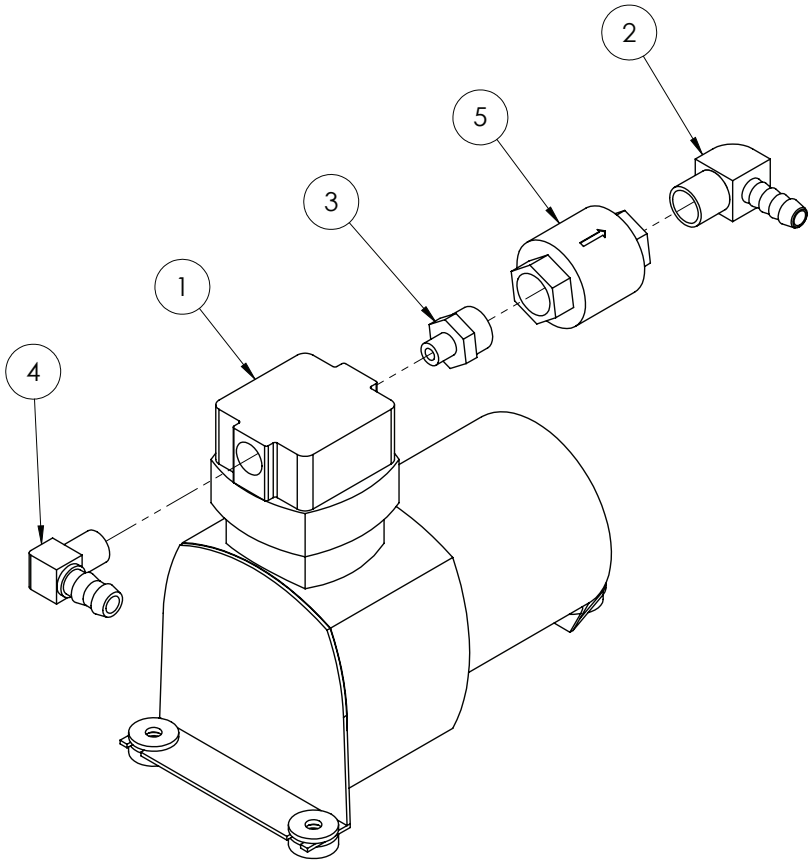

ITEM NO.	PART NUMBER	DESCRIPTION	QTY.
1	GA5018809	Air compressor, Suit airbag, 12V, 30.6L/min, 150psi maximum	1
2	GA5070730	Elbow Brass 3/8" x 3/8"	1
3	GA5020690	Reducing nipple, 1/8" male thread x 3/8" male thread, Brass	1
4	GA5049290	Elbow 1/4" male thread x 3/8" barb brass	1
5	GA5020010	Valve, Check, 3/8" female thread inlet & outlet, Brass	1

Airbag Compressor Assembly

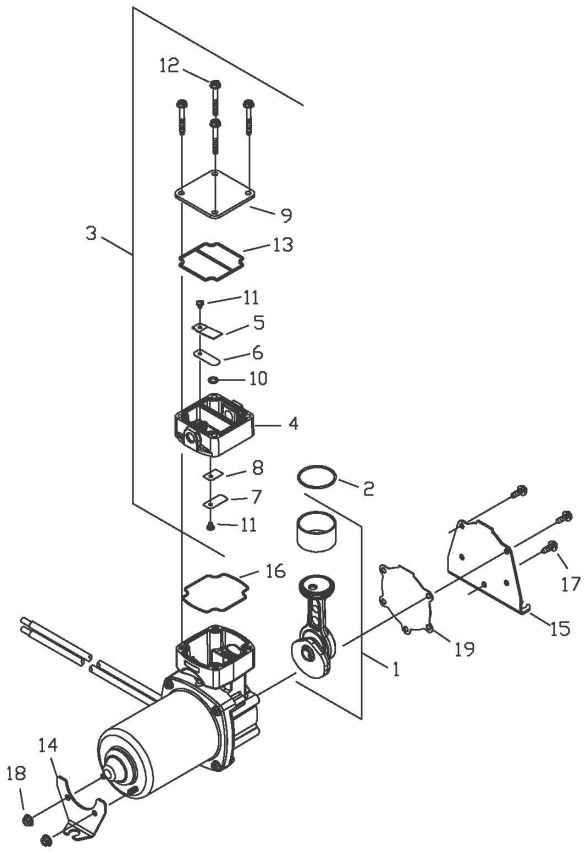

ITEM NO.	PART NUMBER	DESCRIPTION	QTY.
-	GA5018809	Air compressor, Suit airbag, 12V, 30.6L/min, 150psi maximum	-
1	666331	Connecting Rod & Eccentric Assembly	1
2	GA5012547	O Ring - Sleeve	1
3	669136	Head Assembly	1
4	610514	Head	1
5	GA5021535	Valve Restraint	1
6	GA5008789	Valve Flapper - Exhaust	1
7	GA5017339	Valve Flapper - Intake	1
8	GA5021540	Valve Shim	1
9	621602	Head Plate	1
10	623615	O Ring - Valve Flapper	1
11	GA5014807	Screw - Valve Flapper	2
12	625558	Screw - Head	4
13	GA5021545	O Ring Gasket	1
14	617292	Bracket 12V	1
15	617386	Bracket 24V	
16	GA5013541	Bracket	1
17	GA5012559	O Ring Gasket - Housing	1
18	625072	Screw - Bracket	5
19	626283	Nut - Bracket	2
20	GA5009349	Gasket - Bracket	1

Airbag Compressor Pressure Switch

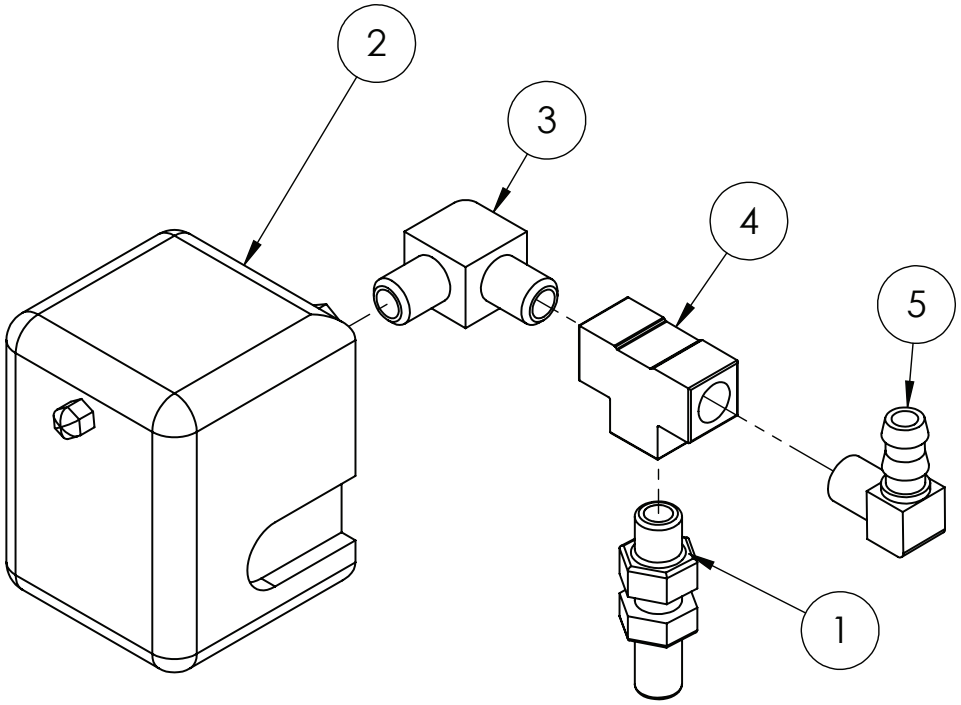

ITEM NO.	PART NUMBER	DESCRIPTION	QTY.
1	GA3500249	Hydraulic adaptor, Bulkhead nipple, 1/4" BSP male x 1/4" BSP male	1
2	GA5016221	Switch differential Press, suits Air Bag	1
3	GA5008343	Elbow male thread 1/4" x 1/4"	1
4	GA5048300	Tee, 1/4" female thread x 1/4" female thread x 1/4" female thread, Brass	1
5	GA5049290	Elbow 1/4" male thread x 3/8" barb brass	1

Airbag & Foam Compressor Mounting

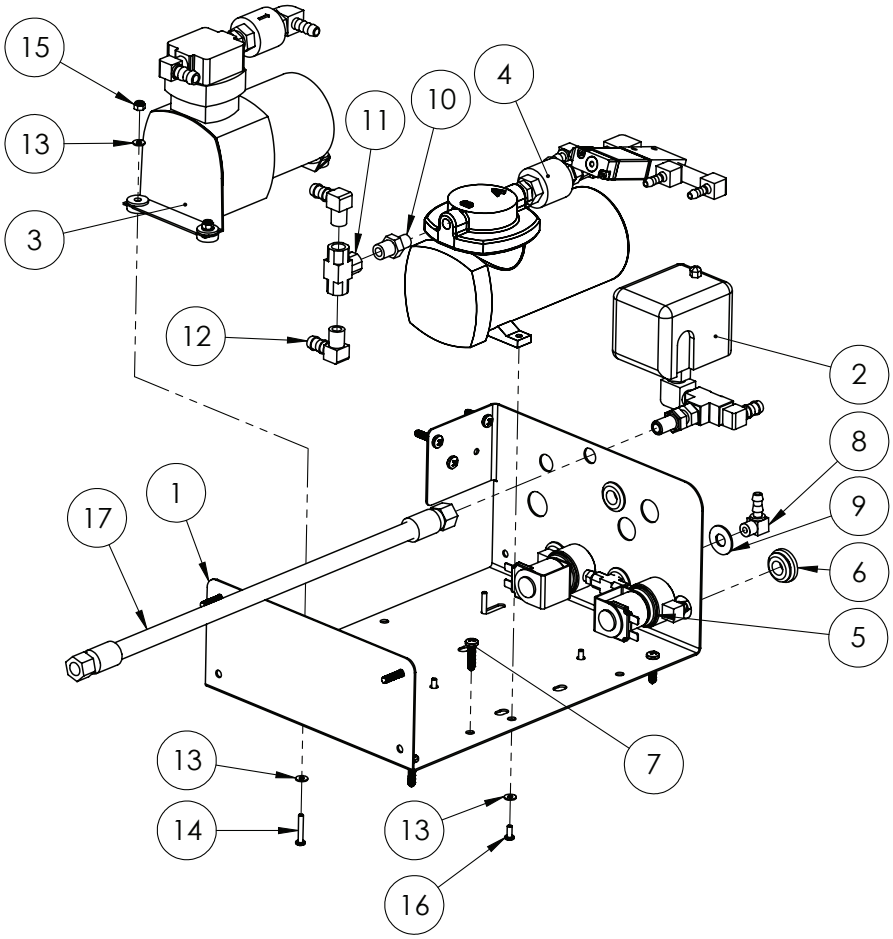

ITEM NO.	PART NUMBER	DESCRIPTION	QTY.
1	F70785A	Foam marker/airbag comp plate	1
2	*	Airbag Compressor Pressure switch, Sub-assembly	1
3	*	Airbag Compressor, Sub-assembly	1
4	*	Foam Marker Compressor, Sub-assembly	1
5	*	Foam Marker solenoid, Sub-assembly	1
6	GA5012199	Neop Grommet 29mm OD	4
7	GA5000527	Screw, Pan head, 12G x 25mm, SS	8
8	GA5066950	Barb elbow brass 1/4" x 1/8"	1
9	GA5002565	Washer, 3/8" ID x 1" OD, Flat SS	1
10	GA5013809	Reducing Nipple 1/4" x 1/8"	1
11	GA5048300	Tee, 1/4" female thread x 1/4" female thread x 1/4" female thread, Brass	1
12	GA5049290	Elbow 1/4" male thread x 3/8" barb brass	2
13	GA5020510	Washer 4mm Flat SS	9
14	GA5049020	Bolt M4 x 25 Pan Head SS	3
15	GA5049025	Nut M4 Nyloc SS	3
16	GA5011360	Bolt M4 x 10 Pan Head SS	3
17	GA4906200	Hyd Hose Airbag Compressor Assembly MY13	1

* Sub-assembly on following pages

Foam Marker Compressor Fittings

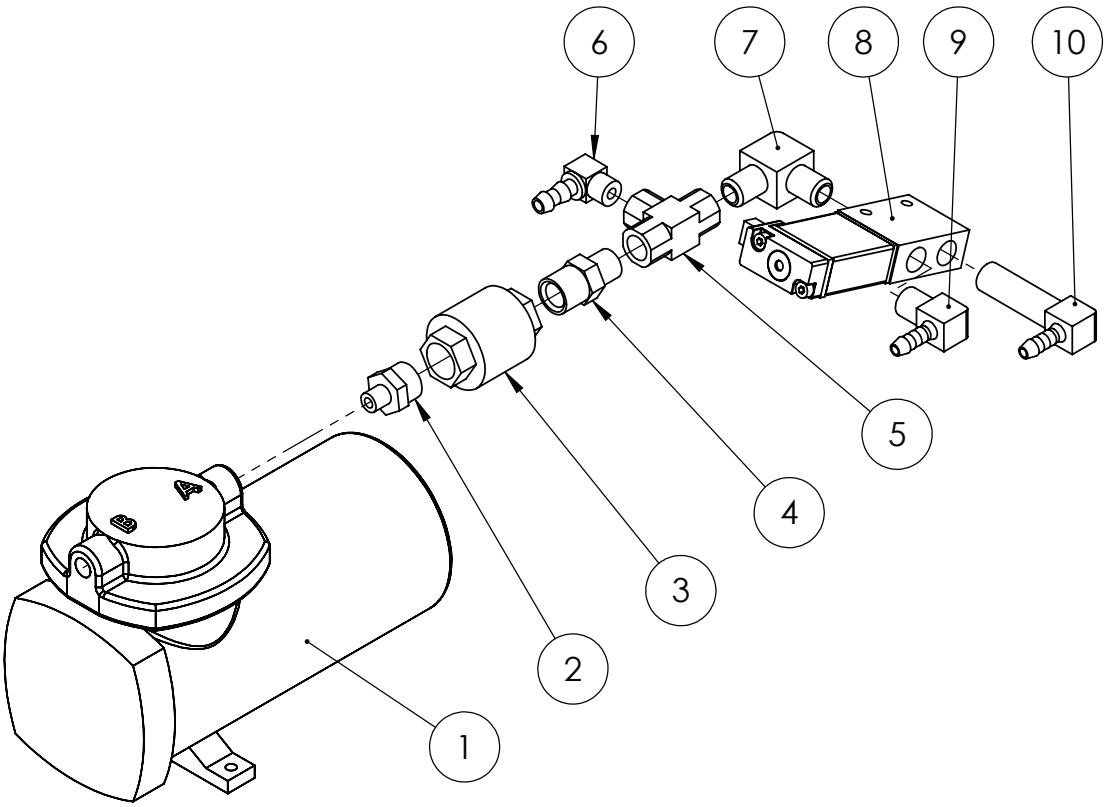

ITEM NO.	PART NUMBER	DESCRIPTION	QTY.
1	GA5018806	Air compressor, Suit foam marker, 12V 39.6L/min 35psi maximum pressure	2
2	GA5020690	Reducing nipple, 1/8” male thread x 3/8” male thread, Brass	1
3	GA5020010	Valve, Check, 3/8” female thread inlet & outlet, Brass	1
4	GA5045085	Reducing nipple, 3/8” male thread x 1/4” male thread, Brass	1
5	GA5048300	Tee, 1/4” female thread x 1/4” female thread x 1/4” female thread, Brass	1
6	GA5066950	Barb elbow brass 1/4” x 1/8”	1
7	GA5008343	Elbow male thread 1/4” x 1/4”	1
8	GA5002959	Solenoid valve, Electric over air, MAC	1
9	GA5048340	Elbow, 90 degree, 1/4" male thread x 1/4" hose, Brass	1
10	GA5008347	Elbow male barb 1/4” x 1/4” x 40 mm long	1

Foam Marker Compressor Mounting

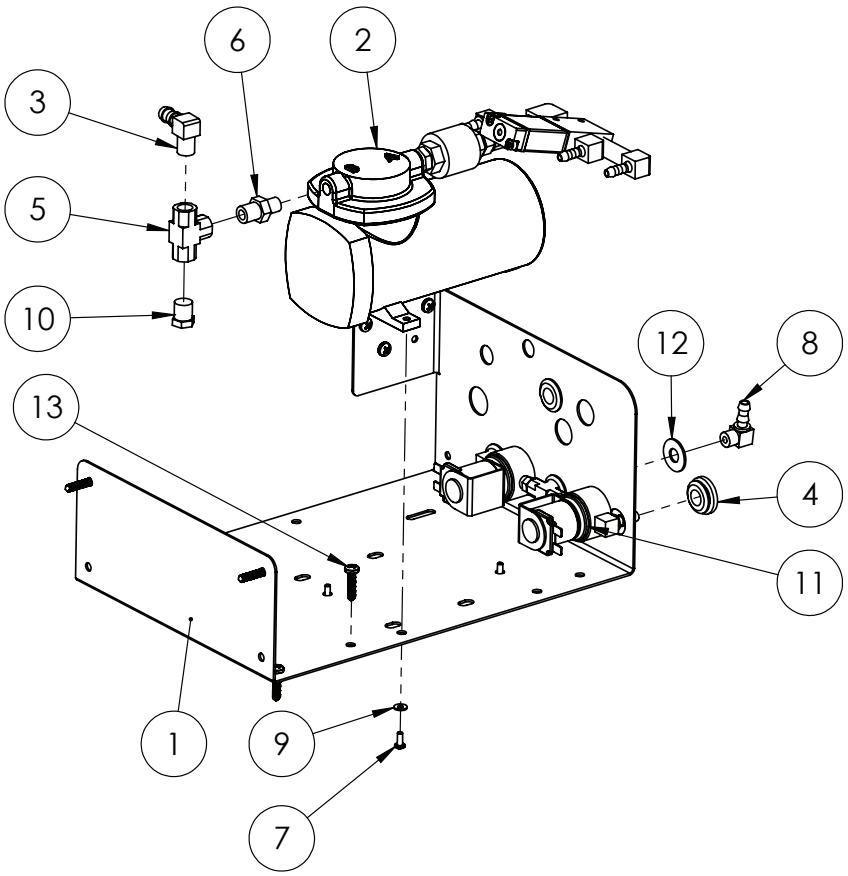

ITEM NO.	PART NUMBER	DESCRIPTION	QTY.
1	F70785A	Foam marker/airbag comp plate	1
2	*	Foam Marker Compressor, Sub-assembly	1
3	GA5049290	Elbow 1/4" male thread x 3/8" barb brass	1
4	GA5012199	Neop Grommet 29mm OD	4
5	GA5048300	Tee, 1/4" female thread x 1/4" female thread x 1/4" female thread, Brass	1
6	GA5013809	Reducing Nipple 1/4" x 1/8"	1
7	GA5011360	Bolt M4 x 10 Pan Head SS	3
8	GA5066950	Barb elbow brass 1/4" x 1/8"	1
9	GA5020510	Washer 4mm Flat SS	3
10	GA5069335	Plug, 1/4" BSPT male thread, Brass	1
11	*	Foam Marker solenoid, Sub-assembly	1
12	GA5002565	Washer, 3/8" ID x 1" OD, Flat SS	1
13	GA5000527	Screw, Pan head, 12G x 25mm, SS	8

* Sub-assembly on following pages

Foam Marker Compressor Assembly

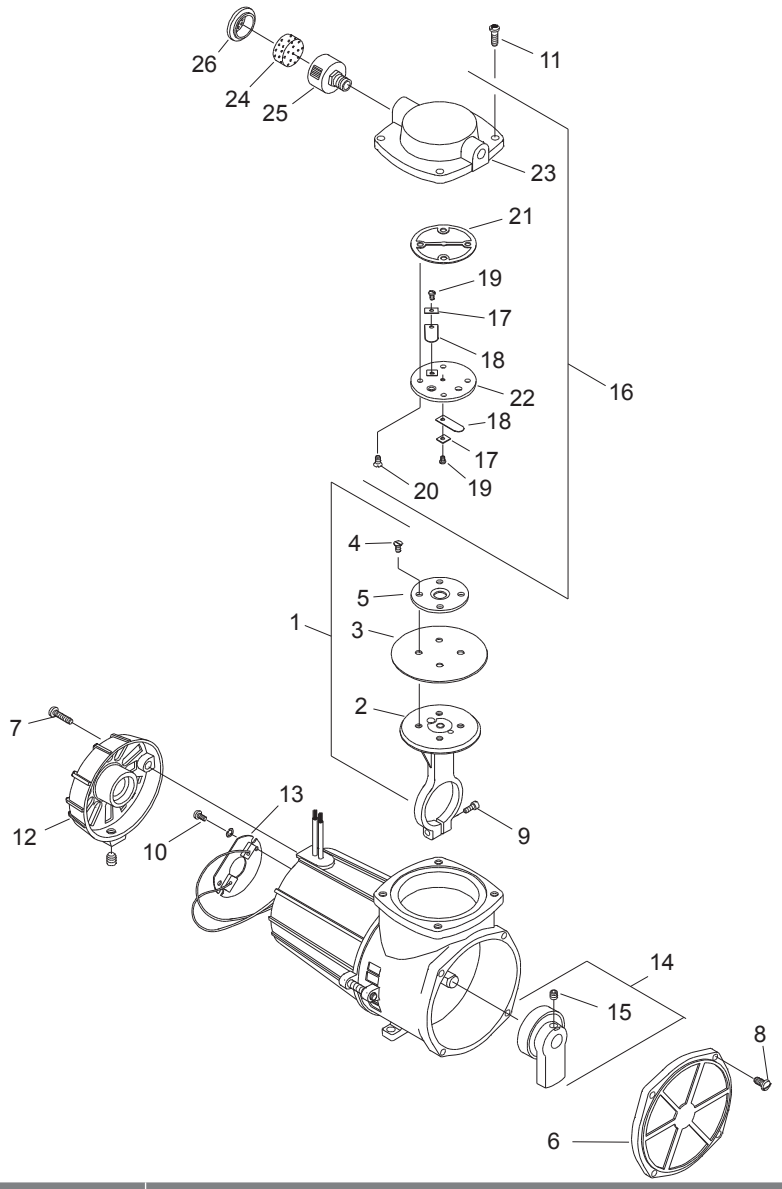

ITEM NO.	PART NUMBER	DESCRIPTION	QTY.
-	GA5018806	Air compressor, Suit foam marker, 12V 39.6L/min 35psi maximum pressure	-
-	GA4948635	Service Kit, Suit foam marker compressor 107CDC20, Includes diaphragm, gasket, valves, screws & air filter	-
1	607180	Connecting Rod Assembly	1
2	607139	Connecting Rod	1
3	GA5009165	Diaphragm	1
4	GA5007339	Screw - Hold Down Plate	4
5	GA5013073	Hold Down Plate	1
6	614608	Front Cover	1
7	625260	Screw - Motor End Cap	2
8	625660	Screw - Front Cover	4

Continued over page

Foam Marker Compressor Assembly

ITEM NO.	PART NUMBER	DESCRIPTION	QTY.
9	625114	Conn Rod. Screw	1
10	625476	Screw - Brush Card	2
11	625444	Screw - Head	4
12	620352	Motor End Cap Assembly	1
13	GA5006445	Brush kit Thomas compressor	1
14	645373	.18 Stroke Eccentric & Bearing Assy	1
	667611	.20 Stroke Eccentric & Bearing Assy	1
15	625244	Set Screw - Eccentric	1
16	GA5016651	Head & Valve Plate Assembly	1
17	GA5017351	Valve Keeper	2
18	GA5008789	Valve Flapper - Intake & Exhaust	2
19	GA5007337	Screw - Flapper	2
20	GA5014803	Screw - Valve Plate	4
21	GA5007335	Gasket - Head	1
22	654129	Valve Plate	1
23	660131-504	Head	1
24	641034	Filter Foam	1
25	660763	Filter Body	1
26	660767	Filter Body Cap	1

AIR COMPRESSOR FILTER PARTS

PART NUMBER	DESCRIPTION
GA5005259	Air filter, 1" BSP male thread
GA5049460	Filter element, For filter body GA5005259, Suit foam marker compressor

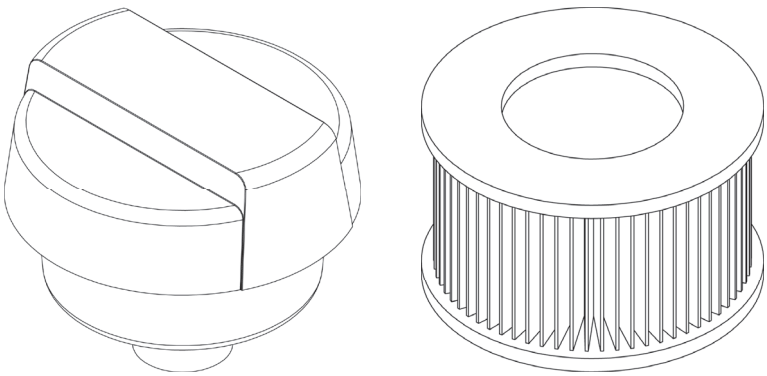

Foam Marker Solenoid Assembly

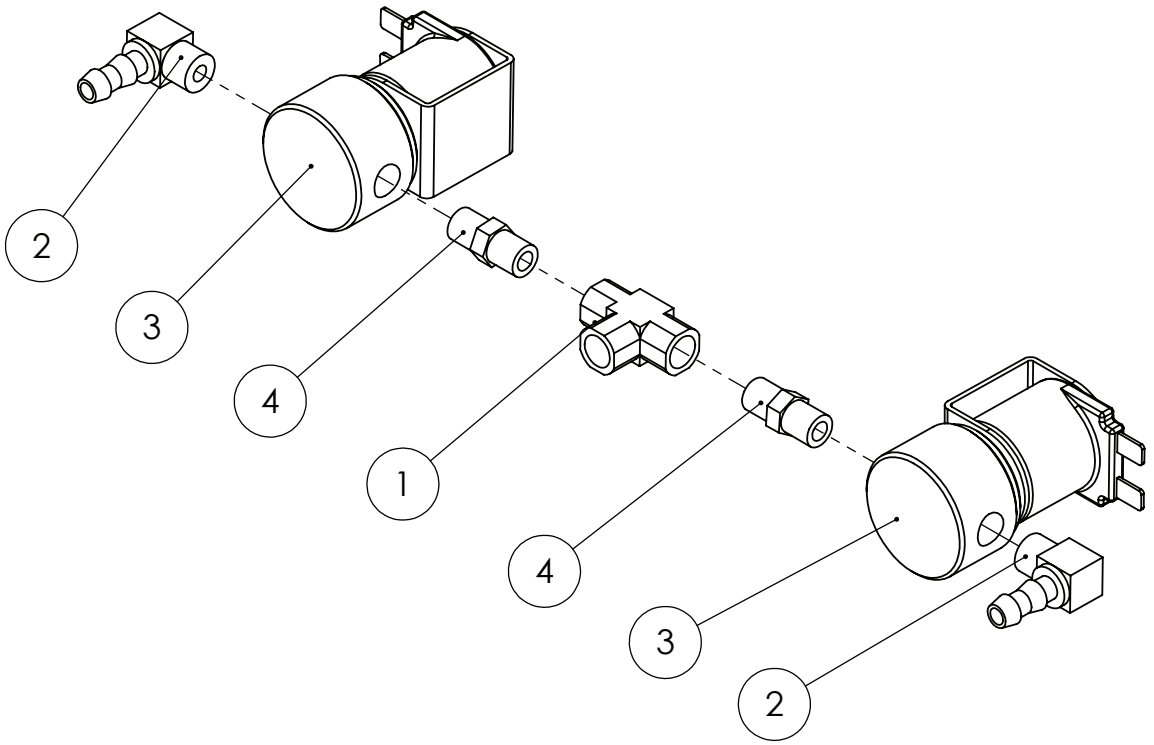

ITEM NO.	PART NUMBER	DESCRIPTION	QTY.
1	GA5016559	Tee female brass 1/8”	1
2	GA5066950	Barb elbow brass 1/4” x 1/8”	2
3	GA5018395	Solenoid valve, Suit foam marker	2
4	GA5066935	Nipple brass 1/8” x 1/8”	2

Foam Marker Exhaust Valve Assembly

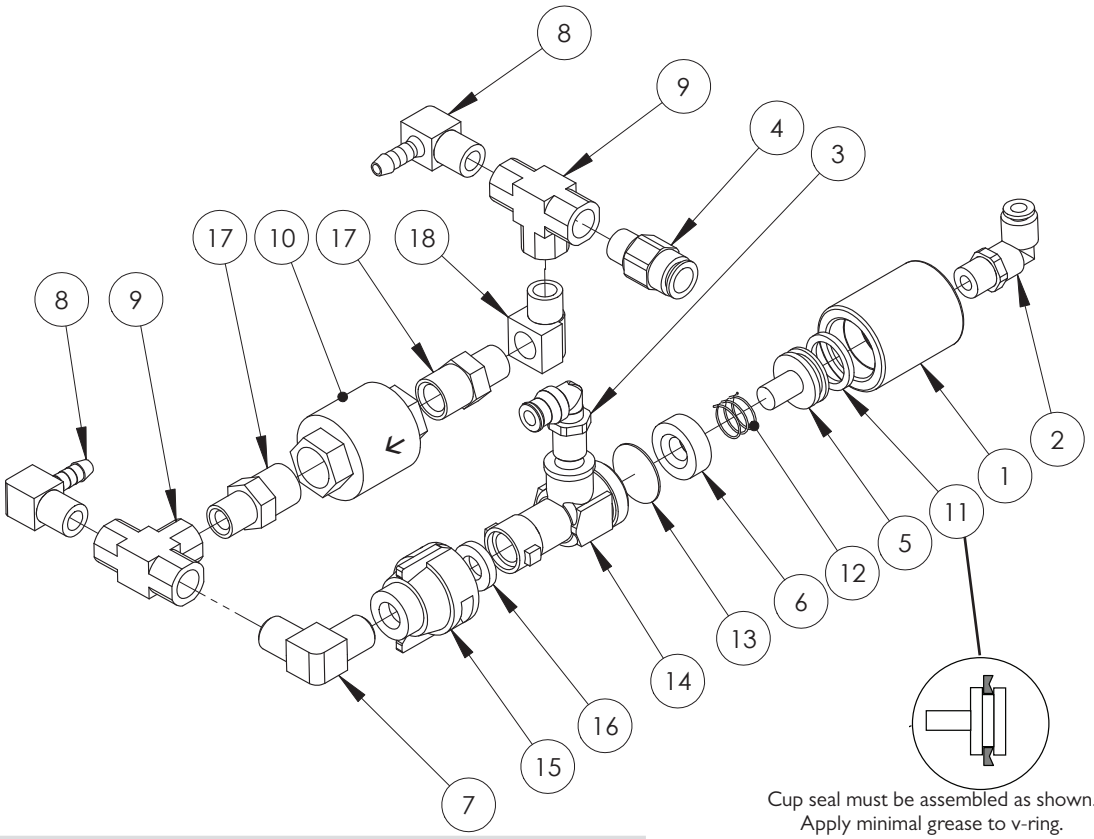

GA4902160 Exhaust Valve Replacement Service Kit

ITEM NO.	PART NUMBER	DESCRIPTION	QTY.
1	GA4572000	Air Chemsaver Body	1
2	GA5045145	Elbow, Brass, 6mm x 1/8" BSPT	1
3	GA5016233	Pneumatic fitting, Elbow, 90 degree, 1/4" BSP male x 6mm push type, Metal	1
4	GA5045140	Pneumatic fitting, Nipple, 1/4" BSPT male x 6mm push type, Brass	1
5	GA4572005	Air Chemsaver Piston	1
6	GA4572010	Air Chemsaver Washer	1
7	GA5008343	Elbow male thread 1/4" x 1/4"	1
8	GA5048340	Elbow, 90 degree, 1/4" male thread x 1/4" hose, Brass	2
9	GA5048300	Tee, 1/4" female thread x 1/4" female thread x 1/4" female thread, Brass	2
10	GA5020010	Valve, Check, 3/8" female thread inlet & outlet, Brass	1
11	GA5077548	Cup seal (Foam Marker Exhaust Valve)	1
12	GA5045090	Spring foam marker 14.2 x 14mm	1
13	GA5077990	Nozzle body, Single, 1/4" NPT female inlet, Teejet	1
14	5860036	Arag D.C.V. Complete	1
15	GA5077983	Nozzle cap & washer, Black, Nylon, Teejet	1
16	CP19438-EPR	Seat washer, Rubber	1
17	GA5045085	Reducing nipple, 3/8" male thread x 1/4" male thread, Brass	2
18	GA5048305	Elbow, 90 degree, 1/4" BSP male x 1/4" BSP female, Brass	1

RapidFire & Airbag Compressor Mounting

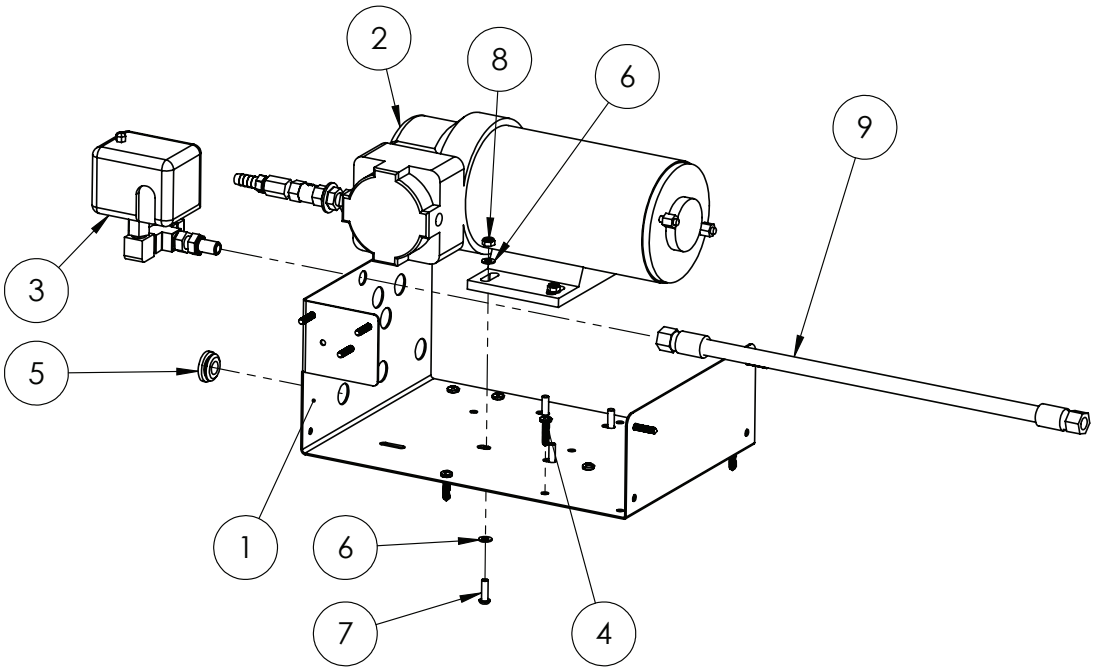

ITEM NO.	PART NUMBER	DESCRIPTION	QTY.
1	F70785A	Foam marker/airbag comp plate	1
2	*	RapidFire Compressor, Sub-assembly	1
3	*	Airbag Compressor Pressure switch, Sub-assembly	1
4	GA5000527	Screw, Pan head, 12G x 25mm, SS	12
5	GA5012199	Neop Grommet 29mm OD	1
6	GA5004437	Washer 6mm Flat SS	8
7	GA5004053	BHCS M6 x 20 SS	4
8	GA5048115	Nut M6 Nyloc ZP	4
9	GA4906200	Hyd Hose Airbag Compressor Assembly MY13	1
-	GA5063602	Loom High current, with solenoid to suit rapid fire compressor	1

* Sub-assembly on following pages

SOLENOID

PART NUMBER	DESCRIPTION
GA5052280	Solenoid coil 200A NO silver contacts SPST steel plated

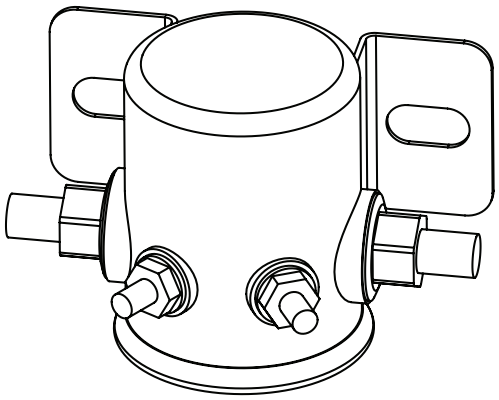

RapidFire Compressor Assembly

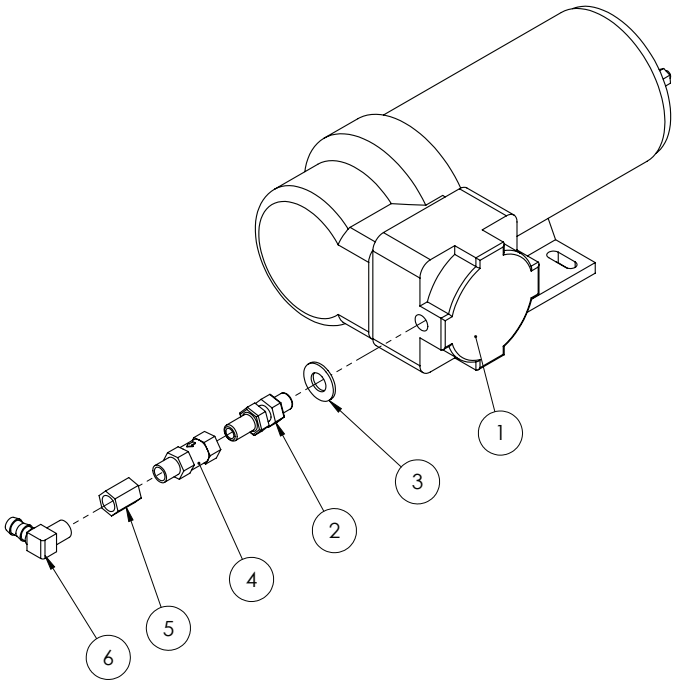

ITEM NO.	PART NUMBER	DESCRIPTION	QTY.
1	GA5053340	Compressor Rapid Fire	1
2	GA3500249	Hydraulic adaptor, Bulkhead nipple, 1/4" BSPP male x 1/4" BSPP male	1
3	GA5066235	Washer 14mm HD ZP Yellow	1
4	GA5014796	Valve, Check, Pneumatic, 1/4" thread female inlet & male outlet	1
5	GA5066940	Socket, 1/4" female thread, Hex, Brass	1
6	GA5049290	Elbow 1/4" male thread x 3/8" barb brass	1

Fill Pump Spool

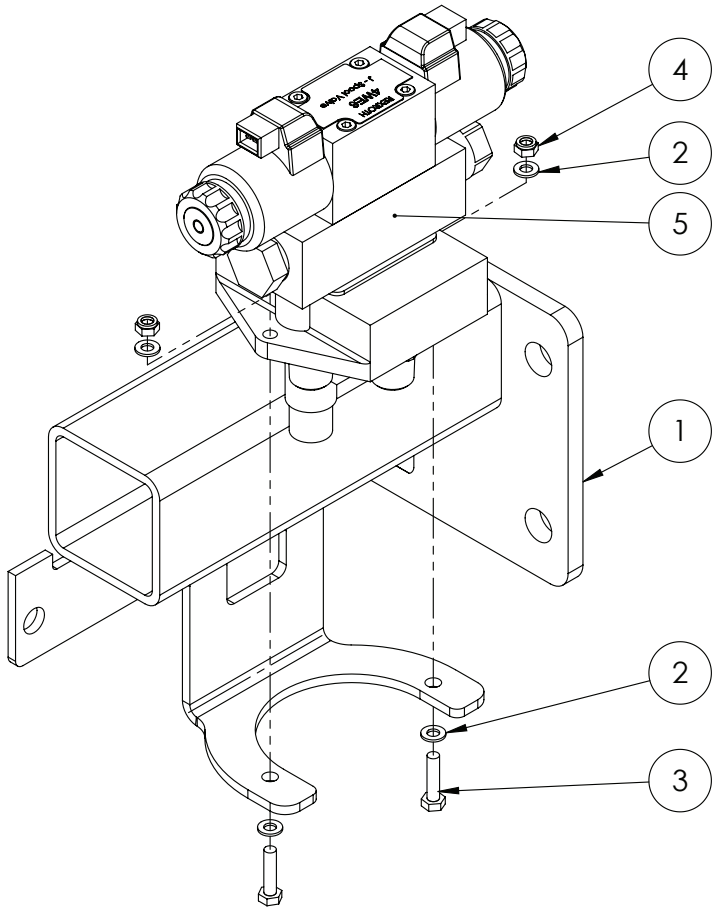

ITEM NO.	PART NUMBER	DESCRIPTION	QTY.
1	GA4654410	Pod Frame Advance RH	1
2	GA5004437	Washer 6mm Flat SS	4
3	GA5004073	Bolt M6 x 25 ZP GR8.8	2
4	GA5048115	Nut M6 Nyloc ZP	2
5	^	Fill pump hydraulic manifold assembly MY14 with AMP plug	1

^ See Chapter 18 'Hydraulics' for sub-assembly.

Chapter 5

LEFT HAND POD

LH POD - Overview

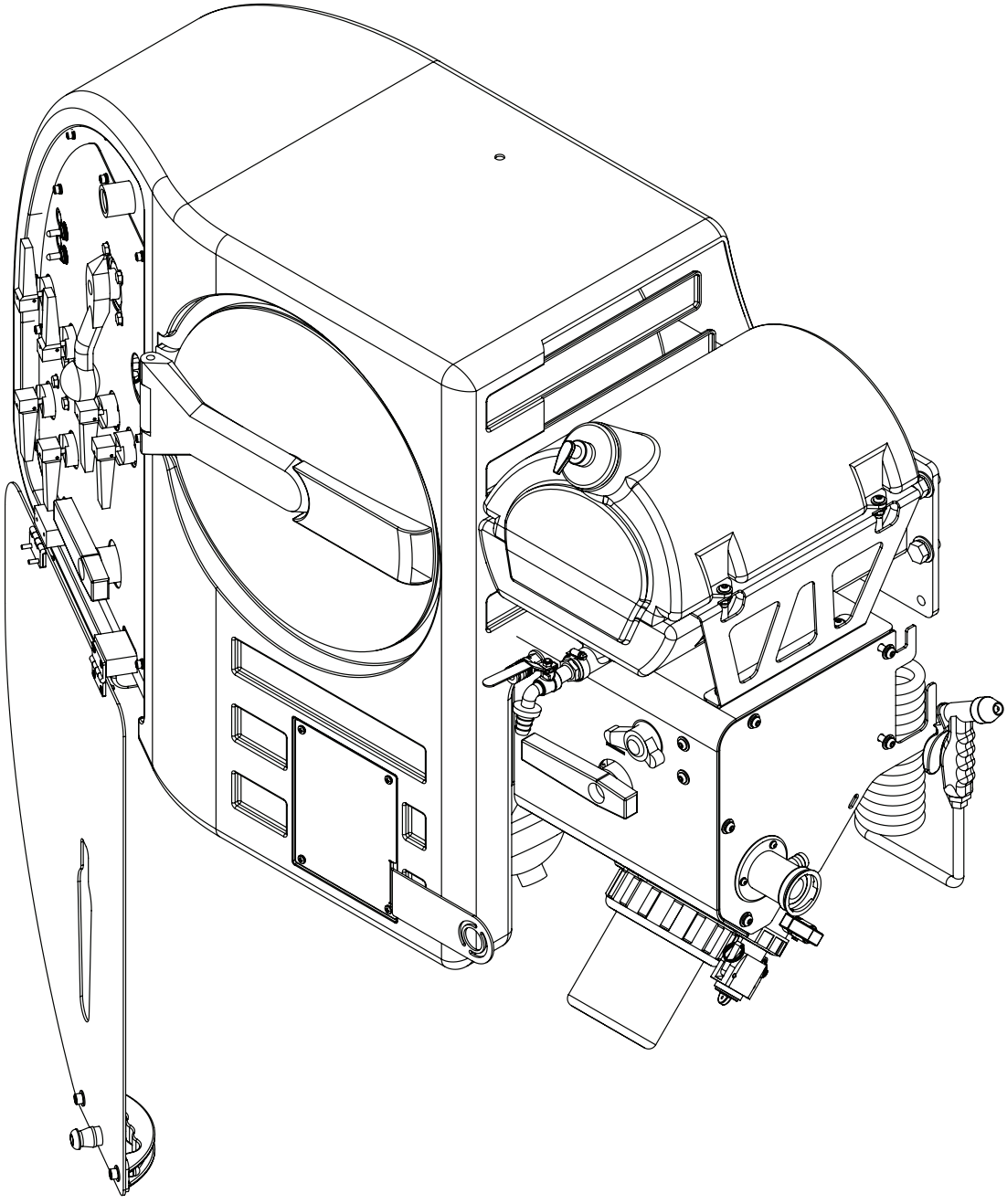

LH POD Assembly

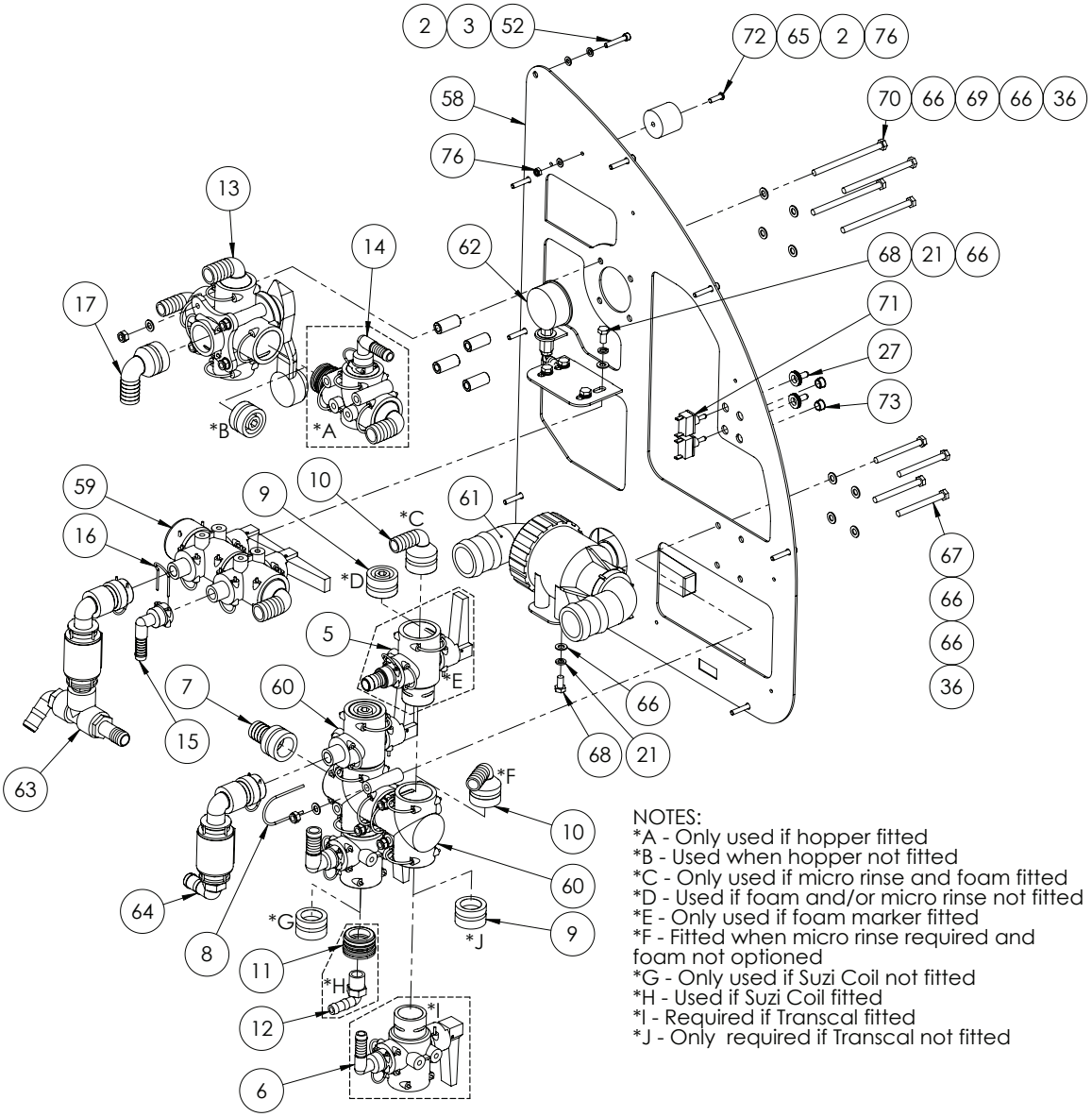

Continued over page

LH POD Assembly

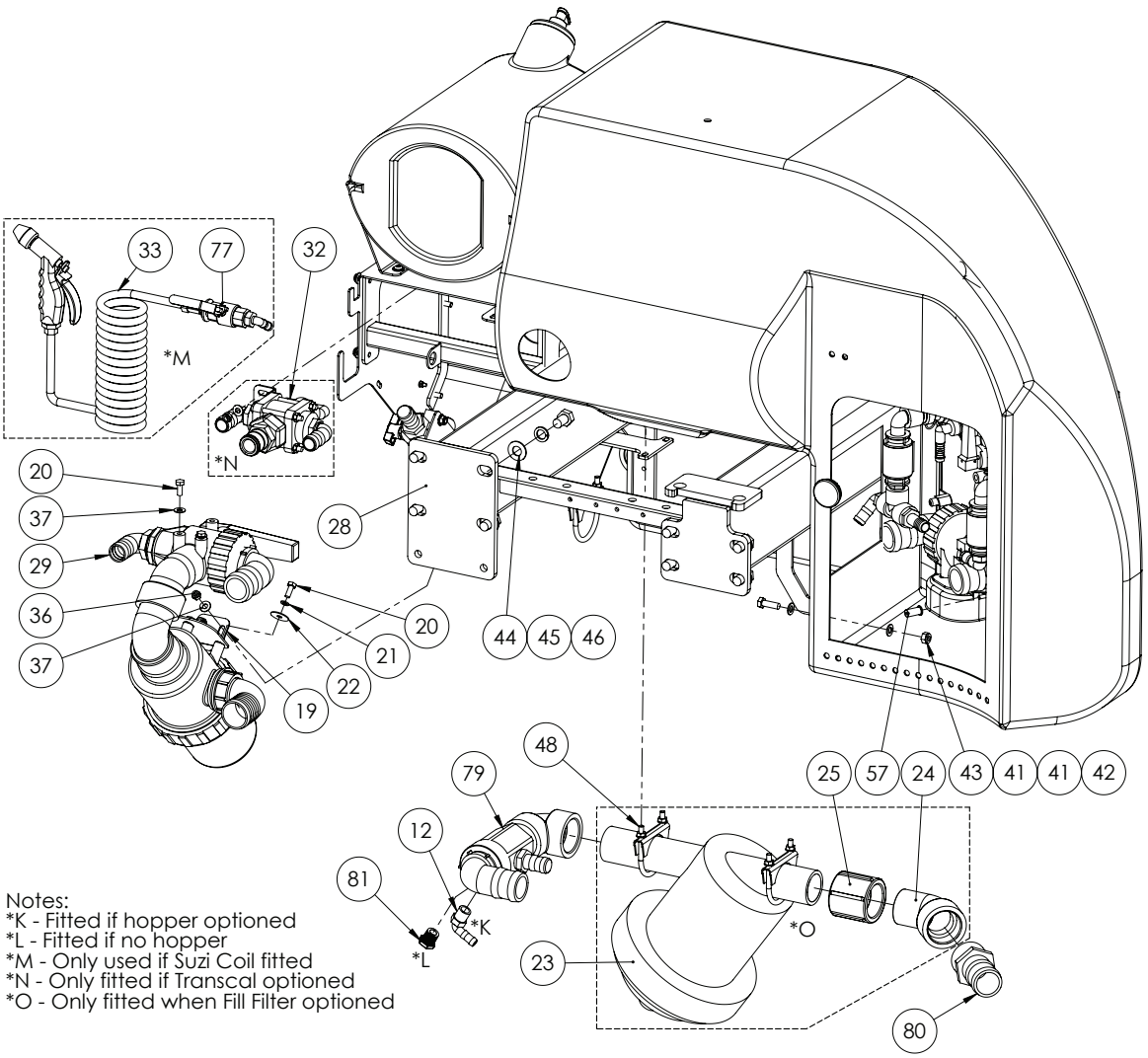

Notes:
*K - Fitted if hopper optioned
*L - Fitted if no hopper
*M - Only used if Suzi Coil fitted
*N - Only fitted if Transcal optioned
*O - Only fitted when Fill Filter optioned

Continued over page

LH POD Assembly

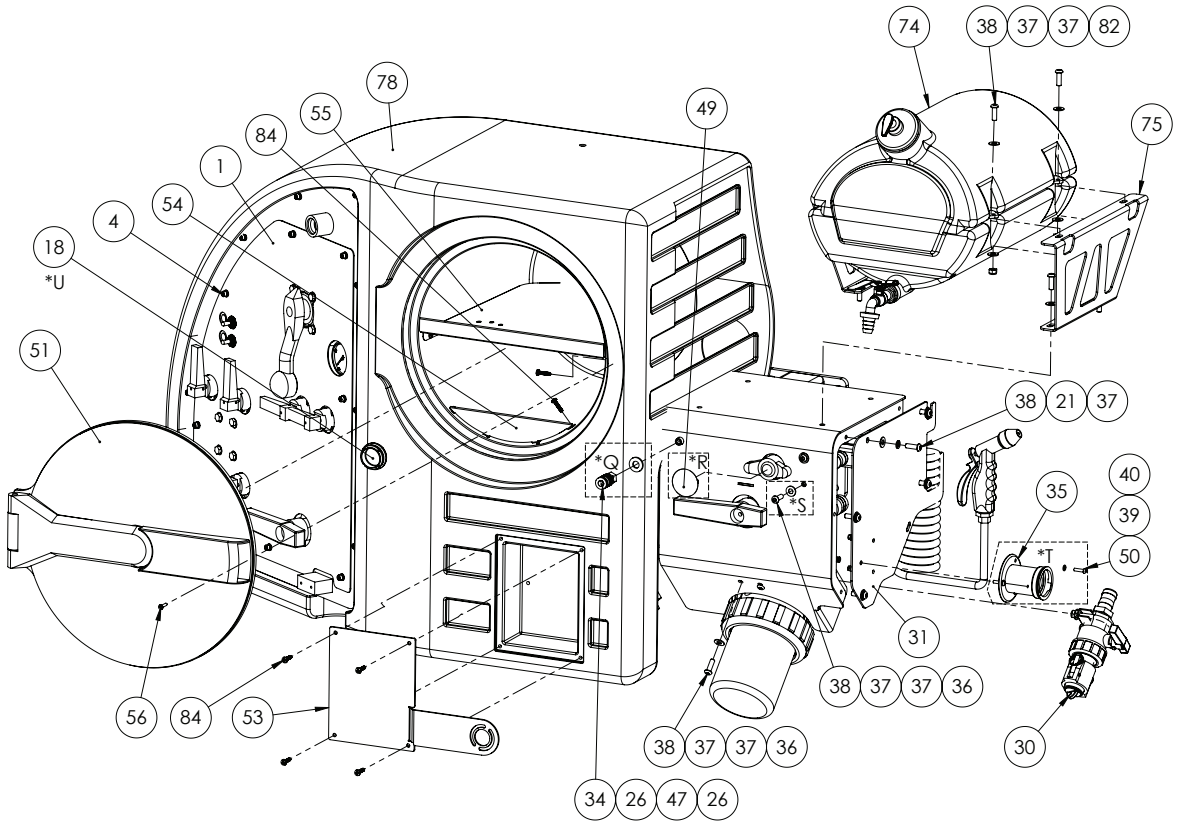

Notes:
*Q - Only fitted when airbags optioned
*R - Fitted when Transcal is not optioned
*S - Used when Trasncal is optioned
*T - Only fitted if Micromatic rinse optioned
*U - This is to be glued into the locker door for air seal

ITEM NO.	PART NUMBER	DESCRIPTION	QTY.
1	GA4523635	Cover Plate suit Altek ball valves 2011	1
2	GA5004437	Washer 6mm Flat SS	18
3	GA5004447	Washer, 6mm, Spring, SS	17
4	GA5004055	SHCS M6 x 20 ZP GR12.9	8
5	*	Foam Marker Fill Tap Assembly	1
6	*	Transcal Tap Assembly	1
7	GA5065580	Plug in hose tail AS40/25	1
8	GA5065690	Safety pin, Suit AS40 plumbing fittings, Altek	1
9	GA5065680	Plug, AS40 male, Altek	4
10	GA5065610	Hose barb, Elbow, 90 degree, AS40 x 20mm hose, Altek	2
11	GA4582345	Dummy plug AS40 G1/2" female (45mm Delron)	1
12	GA5077708	Hose barb, Elbow, 90 degree, 1/2" male thread x 1/2" hose	2
13	*	4 Way Valve Assembly	1
14	*	Hopper Manifold Assembly	1
15	GA5065750	Hose barb, Elbow, 90 degree, AS24 female x 15mm hose, Altek	1

* Sub-assembly on following pages

Continued over page

ITEM NO.	PART NUMBER	DESCRIPTION	QTY.
16	GA5065695	Safety pin AS24	1
17	GA5065615	Hose barb, Elbow 90 degree, AS40 x 25mm, Altek	1
18	GA5003875	End cap, 50 mm round black, 2.5 - 4.5mm wall	1
19	GA4523840	Filter mount plate suit 2011 pod	1
20	GA5004085	Bolt M8 x 20 ZP GR8.8	5
21	GA5004919	Washer 8mm Spring SS	15
22	GA5017645	Washer, 1/4" ID x 1 1/4" OD x 16 gauge SS	3
23	GA5001333	Fill Filter, 2", 7 mesh SS screen with 50 mesh screen sock, viton	1
24	GA5078141	Street elbow, 45 degree, 2" male thread x 2" female thread	1
25	GA5077641	Coupling, socket, 2" female thread	1
26	GA5000577	Washer 12mm Flat SS HD	2
27	GA5012175	Cover, Toggle switch, Waterproof	2
28	GA4658155	Support Frame, Left Hand Side, EF MY11	1
29	*	Suction Filter Assembly	1
30	*	Chemical Probe Assembly	1
31	GA4523755	Prairie suction pod frame side cover plate	1
32	*	Transcal Valve Assembly	1
33	*	Wash Down Gun Assembly	1
34	GA5076620	Female 1/4" BSPP female air coupling	1
35	GA5018800	Rinsing socket, 3 pin, Micromatic / Enviro drum coupling	1
36	GA5004917	Nut M8 Nyloc ZP	12
37	GA5003643	Washer 8mm Flat SS HD	31
38	GA5011473	BHCS M8 x 25 SS	17
39	GA5003983	Washer 5mm Flat SS	6
40	GA5003975	Nut M5 Nyloc SS	3
41	GA5000577	Washer 12mm Flat SS HD	8
42	GA5065455	Bolt M10 x 30 ZP GR8.8	4
43	GA5000141	Nut M10 Nyloc ZP	4
44	GA5001043	Washer 16mm Flat SS HD	8
45	GA5000961	Washer 16mm Spring ZP	8
46	GA5000903	Bolt M16 x 25 ZP GR8.8	8
47	GA3500218	Hydraulic adaptor, Nipple, 1/4" BSP x 1/4" BSP	1
48	GA5006689	Clamp Exhaust 2 5/8" (C12)	3
49	GA5054755	Insert, Hole cover 46mm dia Black	1
50	GA5003581	SHCS M5 x 20 SS GR12.9	3
51	GA5076886	Lid, Hinged, Black plastic, Suit left hand side pod door	1
52	GA5011425	SHCS M6 x 35 SS	9
53	F70651A	Cover plate full face	1
54	GA4534185	Locker Bottom Lip	1
55	GA4534190	Locker Middle Shelf	1
56	GA5014819	Screw 10G x 1" Selt Tapper SS	8
57	GA5020855	Rawl nut, M6 x 25 long	9
58	GA4658165	LHS pod door skin 2011	1

* Sub-assembly on following pages

Continued over page

ITEM NO.	PART NUMBER	DESCRIPTION	QTY.
59	*	Pressure Control Assembly	1
60	*	Fill Manifold Assembly	1
61	*	Flush Tank Fill Tap Assembly	1
62	*	Pressure Gauge Assembly	1
63	*	Pressure Delivery Check Valve Assembly	1
64	*	Flush Tank Check Valve Assembly	1
65	GA5008629	Door holder, Female, Rubber, Black	1
66	GA5003643	Washer 8mm Flat SS HD	23
67	GA5004749	Bolt M8 x 80 ZP GR8.8	4
68	GA5011465	Bolt M8 x 16 ZP GR8.8	7
69	GA4552135	Spacer for Altek rotary valve	4
70	GA5011501	Bolt M8 x 120 ZP GR8.8	4
71	GA5012667	Switch, Toggle, On / Off, Single pole single throw	2
72	GA5004053	BHCS M6 x 20 SS	1
73	GA5048780	Dome plug 12mm	2
74	GA5075110-SK	Water tank, 30L, Black plastic, With soap dispenser	1
75	GA4523740	Tank mount bracket 30L hand wash	2
76	GA5048115	Nut M6 Nyloc ZP	1
77	*	Wash Down Gun Valve Assembly	1
78	GA5018373	Left hand side module	1
79	*	Flush Tank Filter Manifold Assembly	1
80	GA5077737	Hose barb, Straight, 2” male thread x 2” hose	1
81	GA5077943	Plug, 1/2” male thread	1
82	GA5052590	Nut M8 Nyloc SS	8
83	*	LH Pod Door Cover Assembly (not shown)	1
84	GA5000527	Screw, Pan head, 12G x 25mm, SS	12

* Sub-assembly on following pages

HAND SOAP DISPENSER

PART NUMBER	DESCRIPTION
GA5051275	Soap dispenser, Suit hand wash bottle GA5075110

LH POD Door Cover

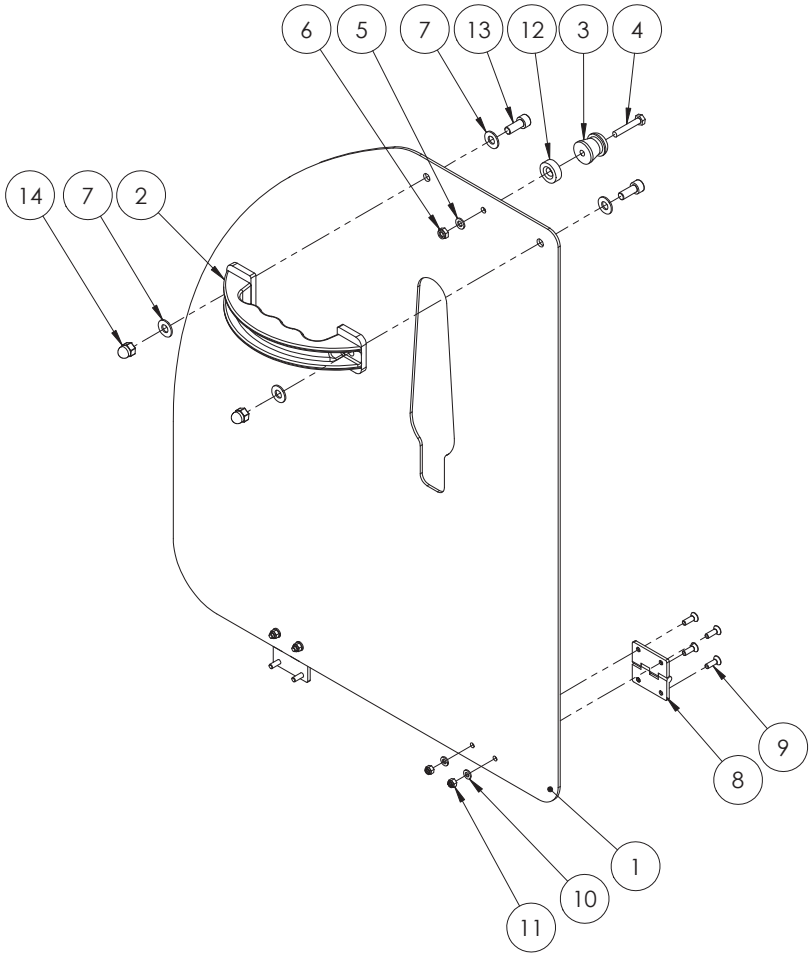

ITEM NO.	PART NUMBER	DESCRIPTION	QTY.
1	GA4523640	Fill Station Hinge Cover suit Altek Valves	1
2	GA5009841	Handle, Black, Heavy duty, Polyethylene	1
3	GA5011607	Door holder, Male, Rubber, Black	1
4	GA5011405	Bolt M6 x 35 ZP GR8.8	1
5	GA5004437	Washer 6mm Flat SS	1
6	GA5048115	Nut M6 Nyloc ZP	1
7	GA5003643	Washer 8mm Flat SS HD	4
8	GA5020415	Hinge Cabin SS 52 x 52 x 3mm (Each)	2
9	GA5051230	CSCS M5 x 16 Countersink SS	8
10	GA5003983	Washer 5mm Flat SS	4
11	GA5003975	Nut M5 Nyloc SS	4
12	GA4572010	Air Chemsaver Washer	1
13	GA5004707	SHCS M8 x 20 ZP GR12.9	2
14	GA5011457	Nut M8 Dome Nut SS	2

Suction Filter Assembly - 260 Zeta

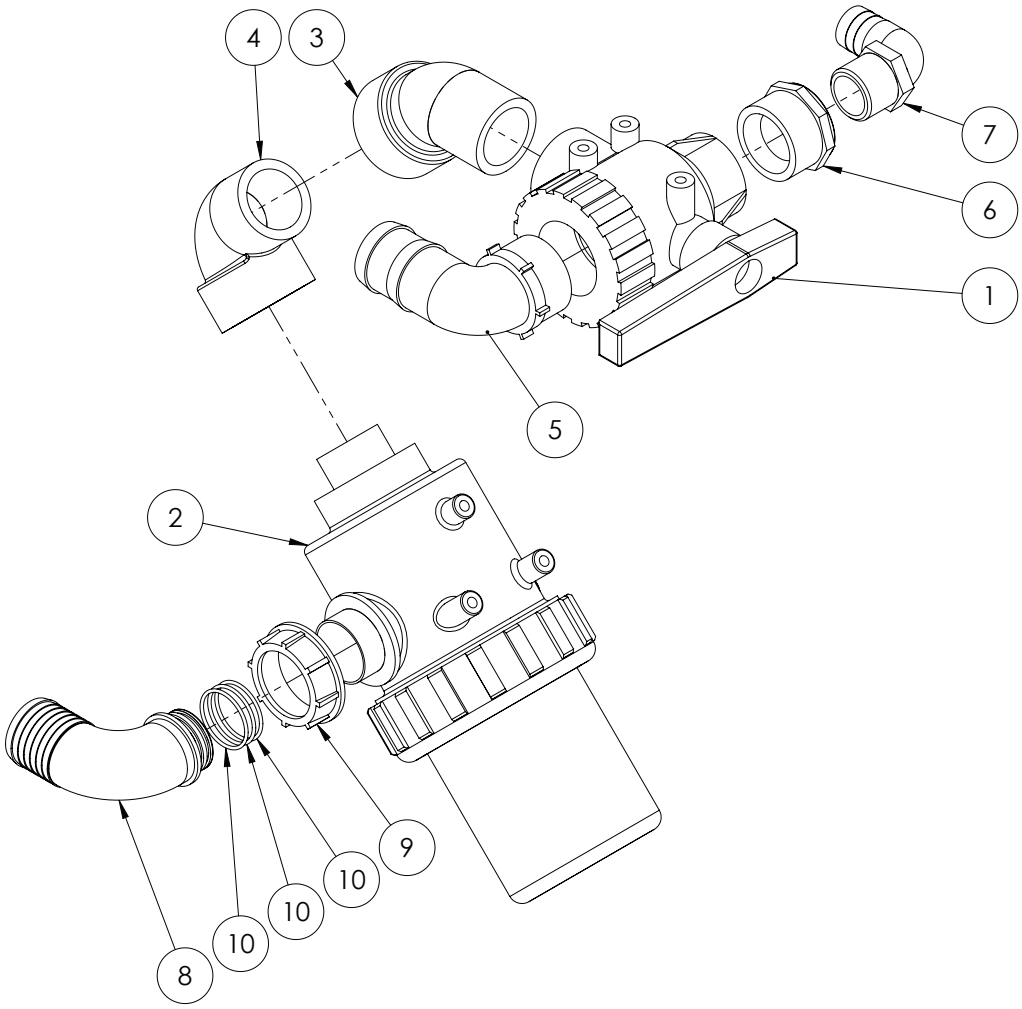

ITEM NO.	PART NUMBER	DESCRIPTION	QTY.
-	GA5076996	Handle, Red, Suit 2” Arag ball valve	-
1	GA5076987	Valve, Ball, 3 way, 2” female thread inlet & outlet	1
2	GA5076799	Filter, Suction, 2” male inlet & outlet, 32 mesh screen	1
3	GA5078141	Street elbow, 45 degree, 2” male thread x 2” female thread	1
4	GA5078142	Street elbow, 90 degree, 2” male thread x 2” female thread	1
5	GA5077740	Hose barb, Elbow, 90 degree, 2" male thread x 2" hose	1
6	GA5078022	Reducing bush, 2” male thread x 1 1/4” female thread	1
7	GA5077730	Hose barb, Elbow, 90 degree, 1 1/4” male thread x 1 1/4” hose	1
8	GA5076262	Hose barb, Elbow, 90 degree, 2” fly nut end x 52 mm hose	1
9	GA5076605	Fly nut, 2”	1
10	GA5048385	O-ring, 42.5 x 2.62mm, BS131	3

Suction Filter Assembly - 300 Zeta

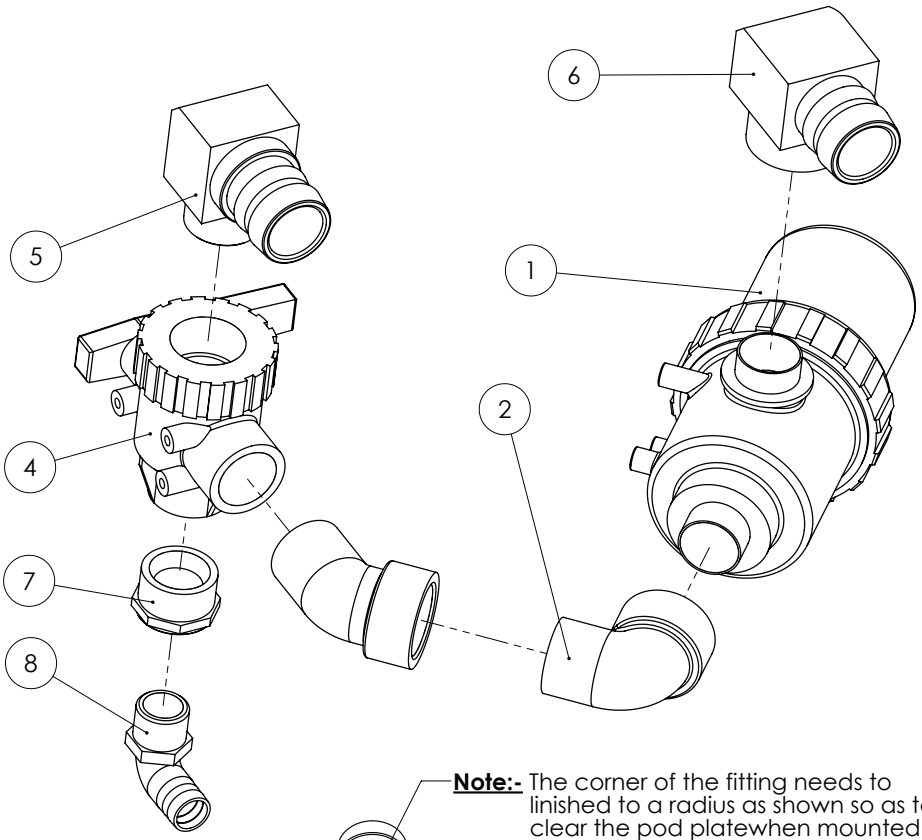

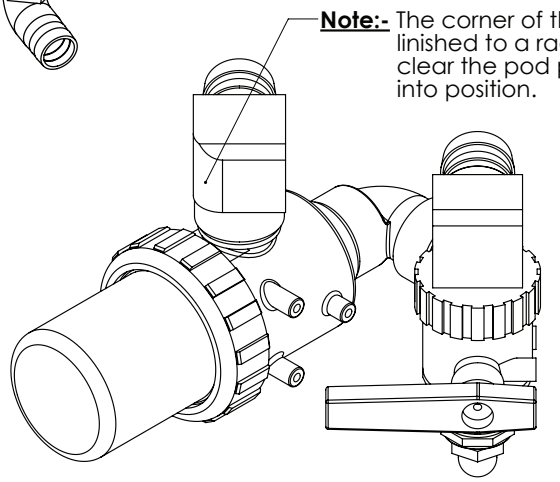

Note:- The corner of the fitting needs to linished to a radius as shown so as to clear the pod platewhen mounted into position.

ITEM NO.	PART NUMBER	DESCRIPTION	QTY.
-	GA5076996	Handle, Red, Suit 2” Arag ball valve	-
1	GA5076799	Filter, Suction, 317, 2” BSP male inlet and outlet, 32 mesh screen	1
2	GA5078142	Street elbow, 90 degree, 2” male thread x 2” female thread	1
3	GA5078141	Street elbow, 45 degree, 2” male thread x 2” female thread	1
4	GA5076987	Valve, Ball, 3 way, 2” female thread inlet & outlet	1
5	L081A	Plumbing fitting, Hose barb, Elbow, 90 degree, 2” male thread x 2 1/2” hose	1
6	L082A	Plumbing fitting, Hose barb, Elbow, 90 degree, 2” female thread x 2 1/2” hose	1
7	GA5078022	Reducing bush, 2” male thread x 1 1/4” female thread	1
8	GA5077730	Hose barb, Elbow, 90 degree, 1 1/4" male thread x 1 1/4" hose	1

3” Fill Mount

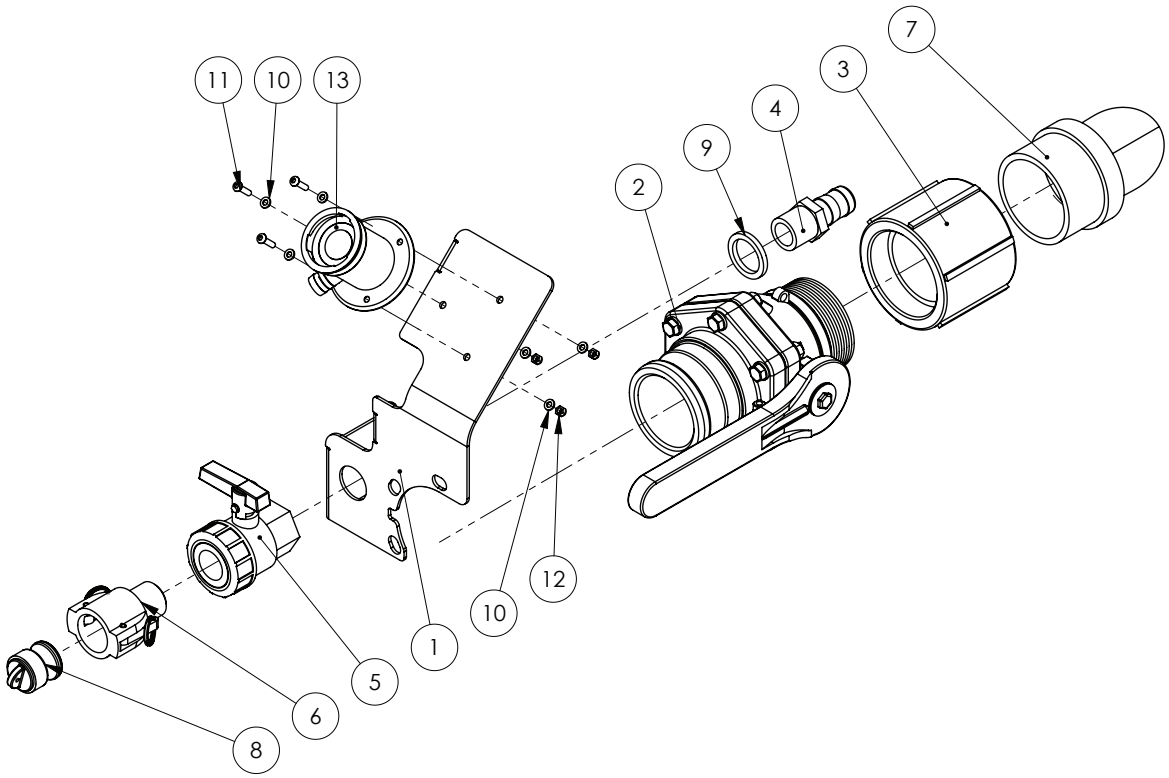

ITEM NO.	PART NUMBER	DESCRIPTION	QTY.
1	GA4510570	Plate, 3" Fill Mount, Chemical Probe & Micromatic Relocate	1
2	GA5078204	3” NPT male x 3” male adaptor long handle	1
3	GA5077642	Coupling, socket, 3" female thread	1
4	GA5077718	Hose barb, Straight, 1” male thread x 1” hose	1
5	GA5078164	Valve, Ball, 1” female thread inlet / outlet, Full port, Lever handle	1
6	GA5076007	Cam lever, 1” female coupler, 1” male thread	1
7	GA5077742	Hose barb, Elbow, 90 degree, 3" male thread x 3" hose	1
8	GA5076013	Cam lever, Male plug, 1”	1
9	GA4552865	Spacer-POD fill point fitting 34	1
10	GA5003983	Washer 5mm Flat SS	6
11	GA0500004	BHCS M5 x 20 SS A2-70	3
12	GA5003975	Nut M5 Nyloc SS	3
13	GA5018800	Rinsing socket, 3 pin, Micromatic / Enviro drum coupling	1

Chemical Probe Assembly

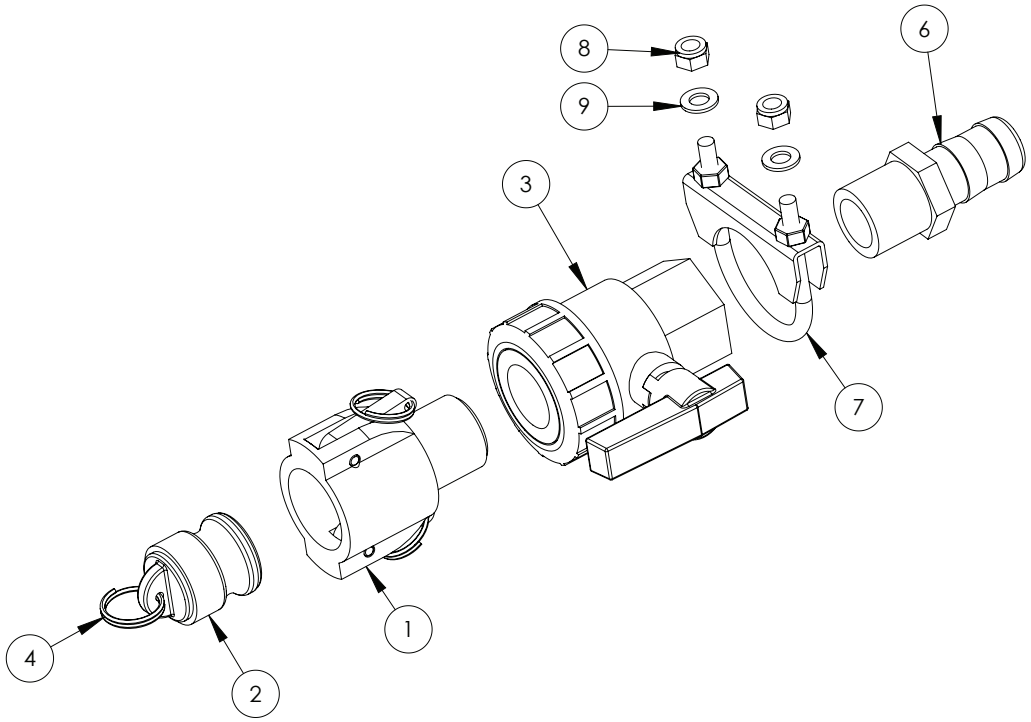

ITEM NO.	PART NUMBER	DESCRIPTION	QTY.
1	GA5076007	Cam lever, 1" female coupler, 1" male thread	1
2	GA5076005	Cam lever, Male plug, Suits 1" & 1 1/4" couplings	1
3	GA5078164	Valve, Ball, 1" female thread inlet / outlet, Full port, Lever handle	1
4	GA5002077	Key ring, 25mm, SS	1
5	GA5001491	Chain 20mm x 2mm cut 150mm Long (not shown)	1
6	GA5077718	Hose barb, Straight, 1" male thread x 1" hose	1
7	GA5006705	Exhaust Clamp C8 2"	1
8	GA5052590	Nut M8 Nyloc SS	2
9	GA5003643	Washer 8mm Flat SS HD	2

Wash Down Gun Assembly

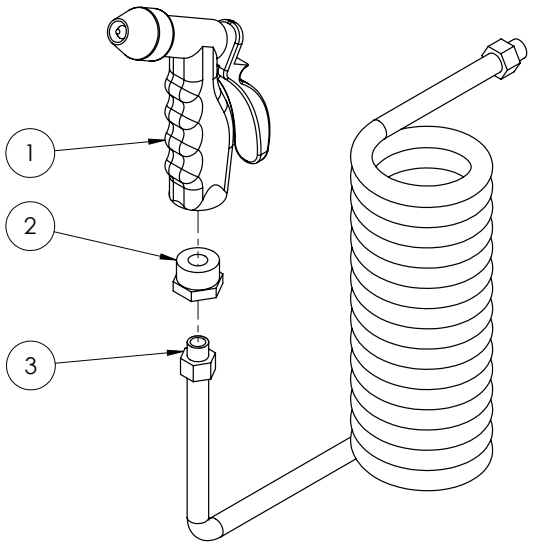

ITEM NO.	PART NUMBER	DESCRIPTION	QTY.
1	GA5051390	Wash down gun, Suit EF / Advance / Evolution	1
2	GA5049701	Bush Brass reducing 3/4" x 1/4"	1
3	GA5051455	Suzi coil, 12mm x 8mm x 5m (1/4" male swivel ends with springs)	1

Wash Down Gun Valve Assembly

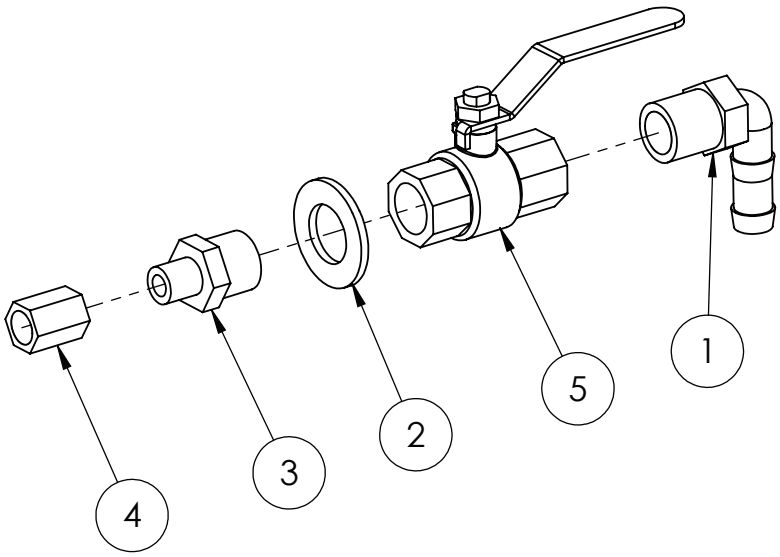

ITEM NO.	PART NUMBER	DESCRIPTION	QTY.
1	GA5077708	Hose barb, Elbow, 90 degree, 1/2" male thread x 1/2" hose	1
2	GA5001741	Washer 20mm Flat SS HD	1
3	GA5012259	Reducing nipple, 1/2" male thread x 1/4" male thread, Brass	1
4	GA5066940	Socket, 1/4" female thread, Hex, Brass	1
5	GA5018309	Valve, Ball, 12mm female thread inlet / outlet, Lever handle, SS	1

Transcal Valve Assembly

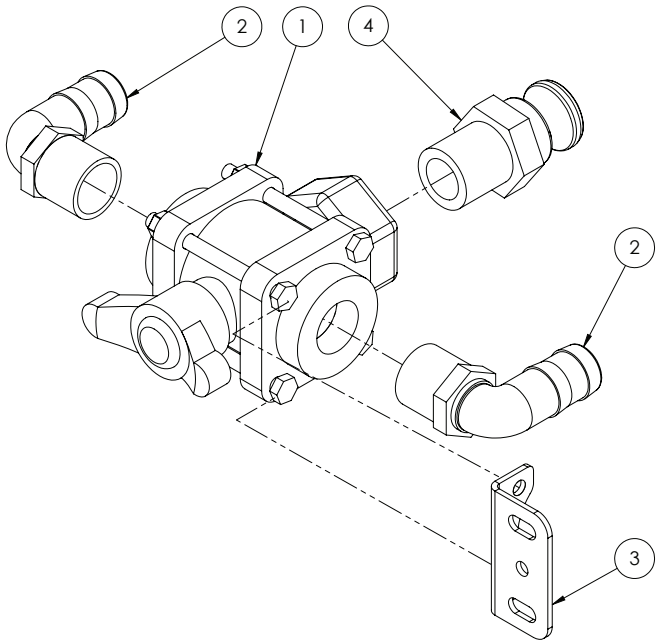

ITEM NO.	PART NUMBER	DESCRIPTION	QTY.
1	GA5078177	Valve, Ball, 3 way, 1” female thread inlet / outlet, Bottom port, Butterfly handle, Banjo	1
2	GA5077723	Hose barb, Elbow, 90 degree, 1” male x 1” hose	2
3	GA4502210	Mounting plate, to suit ball valve	1
4	GA5076012	Cam lever, 1” male coupling x 1” male thread	1
-	F70146A	Decal Plate, Transcal (not shown)	1

Flush Tank Filter Manifold Assembly

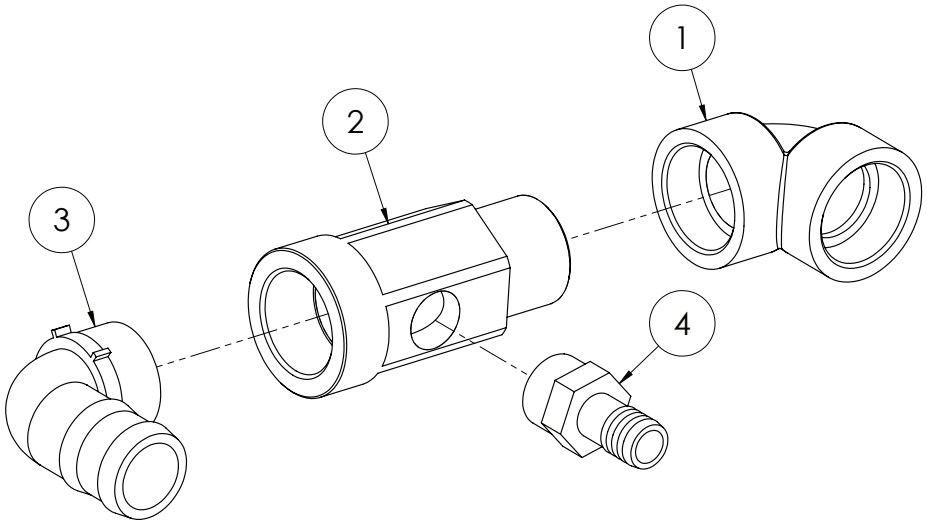

ITEM NO.	PART NUMBER	DESCRIPTION	QTY.
1	GA5077659	Street elbow, 90 degree, 2” female thread x 2” female thread	1
2	MACH0311	Poly fitting, 2" male x 2" female x 1" female	1
3	GA5077740	Hose barb, Elbow, 90 degree, 2" male thread x 2" hose	1
4	GA5077718	Hose barb, Straight, 1” male thread x 1” hose	1

Flush Tank Check Valve Assembly

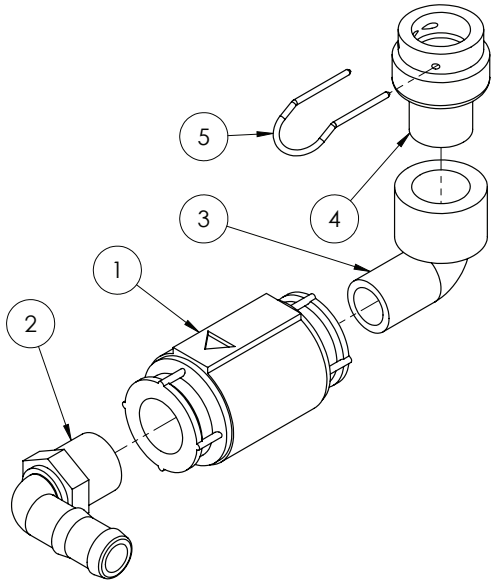

ITEM NO.	PART NUMBER	DESCRIPTION	QTY.
1	GA5002473	Valve non-return 3/4"	1
2	GA5077717	Hose barb, Elbow, 90 degree, 3/4” male thread x 3/4” hose	1
3	GA5078135	Street elbow, 90 degree, 3/4” female thread x 3/4” male thread	1
4	GA4582415	Plumbing adaptor, AS24 female x 3/4" BSPT male	1
5	GA5065695	Safety pin AS24	1

Flush Tank Fill Tap Assembly

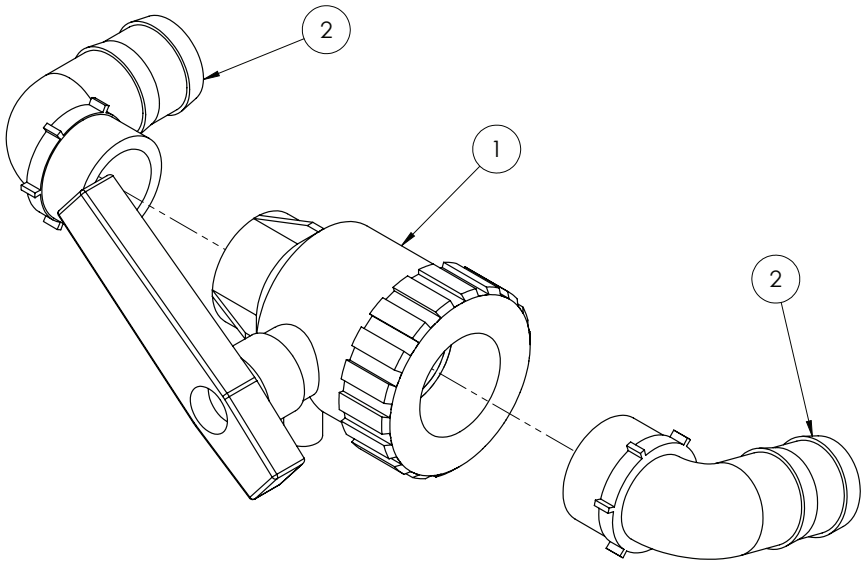

ITEM NO.	PART NUMBER	DESCRIPTION	QTY.
1	GA5076981	Valve, Ball, 2 way, 2” female thread inlet / outlet, Lever handle	1
2	GA5077740	Hose barb, Elbow, 90 degree, 2" male thread x 2" hose	2

Pressure Control Assembly

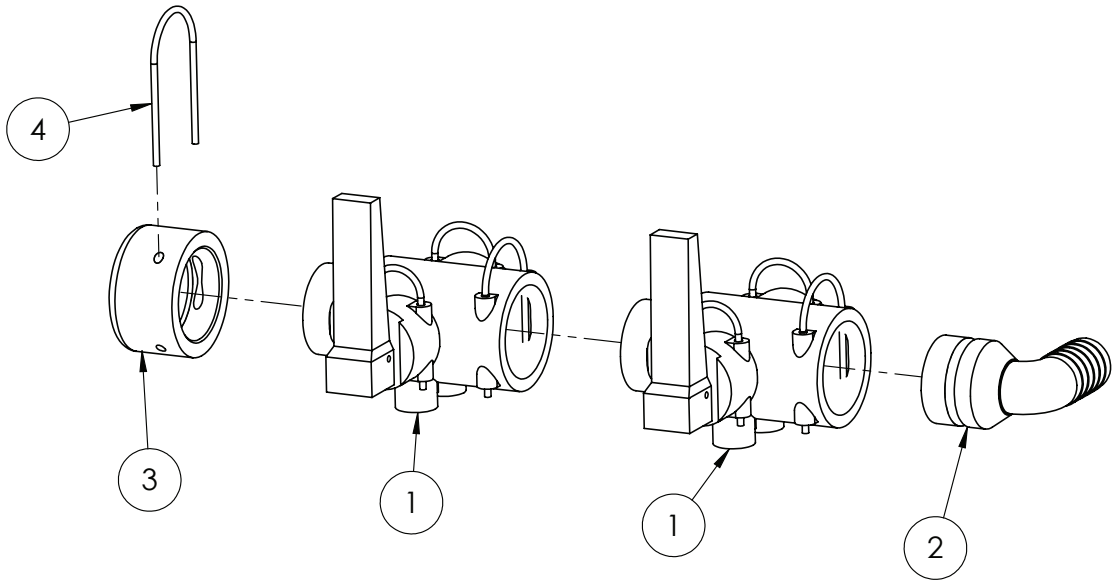

ITEM NO.	PART NUMBER	DESCRIPTION	QTY.
1	GA5065545	Valve, Quick fit flip top, 2 way, AS40 male x AS24 female x AS40 female, Altek	2
2	GA5065615	Hose barb, Elbow 90 degree, AS40 x 25mm	1
3	GA4582395	Cap Altek AS40 (Delron)	1
4	GA5065690	Safety pin, Suit AS40 plumbing fittings	1

Pressure Gauge Assembly

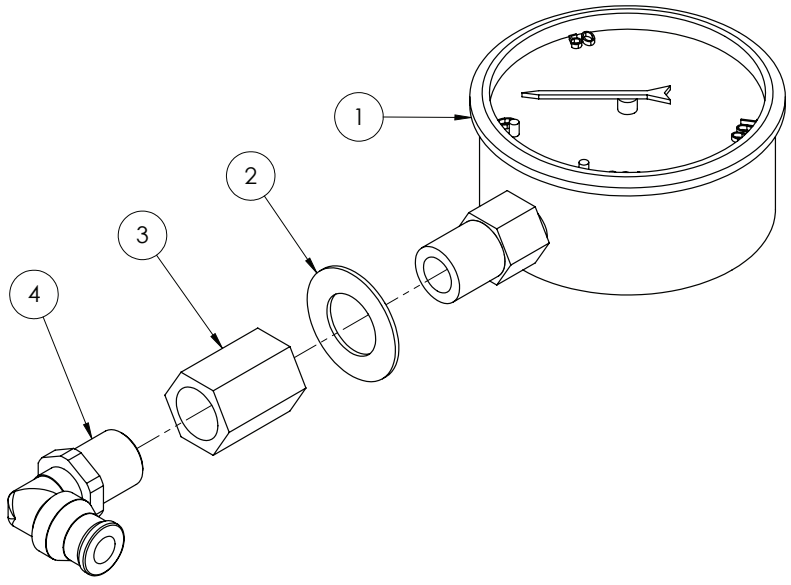

ITEM NO.	PART NUMBER	DESCRIPTION	QTY.
1	GA4948470	Gauge, Pressure, Small face, 160psi	1
2	GA5017641	Washer 1/2" x 1" x 16g Flat SS	1
3	GA5066940	Socket, 1/4" female thread, Hex, Brass	1
4	GA5016233	Pneumatic fitting, Elbow, 90 degree, 1/4" BSP male x 6mm push type, Metal	1

Pressure Delivery Check Valve Assembly

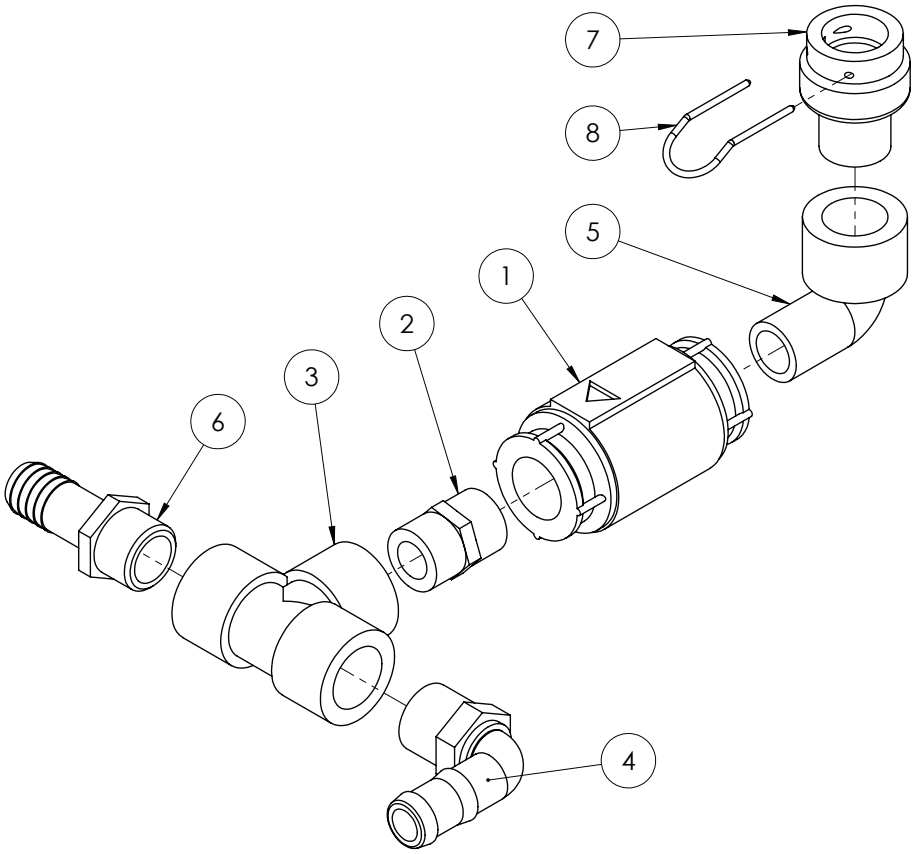

ITEM NO.	PART NUMBER	DESCRIPTION	QTY.
1	GA5002473	Valve non-return 3/4"	1
2	GA5077913	Nipple, 3/4” male x 3/4” male, Short, Banjo	1
3	GA5078150	Tee, Threaded, 3/4” female, Banjo	1
4	GA5077717	Hose barb, Elbow, 90 degree, 3/4” male thread x 3/4” hose	1
5	GA5078135	Street elbow, 90 degree, 3/4” female thread x 3/4” male thread	1
6	GA5077709	Hose barb, Straight, 3/4” male thread x 3/4” hose	1
7	GA4582415	Plumbing adaptor, AS24 female x 3/4" BSPT male, Delrin	1
8	GA5065695	Safety pin AS24	1

Fill Manifold Assembly

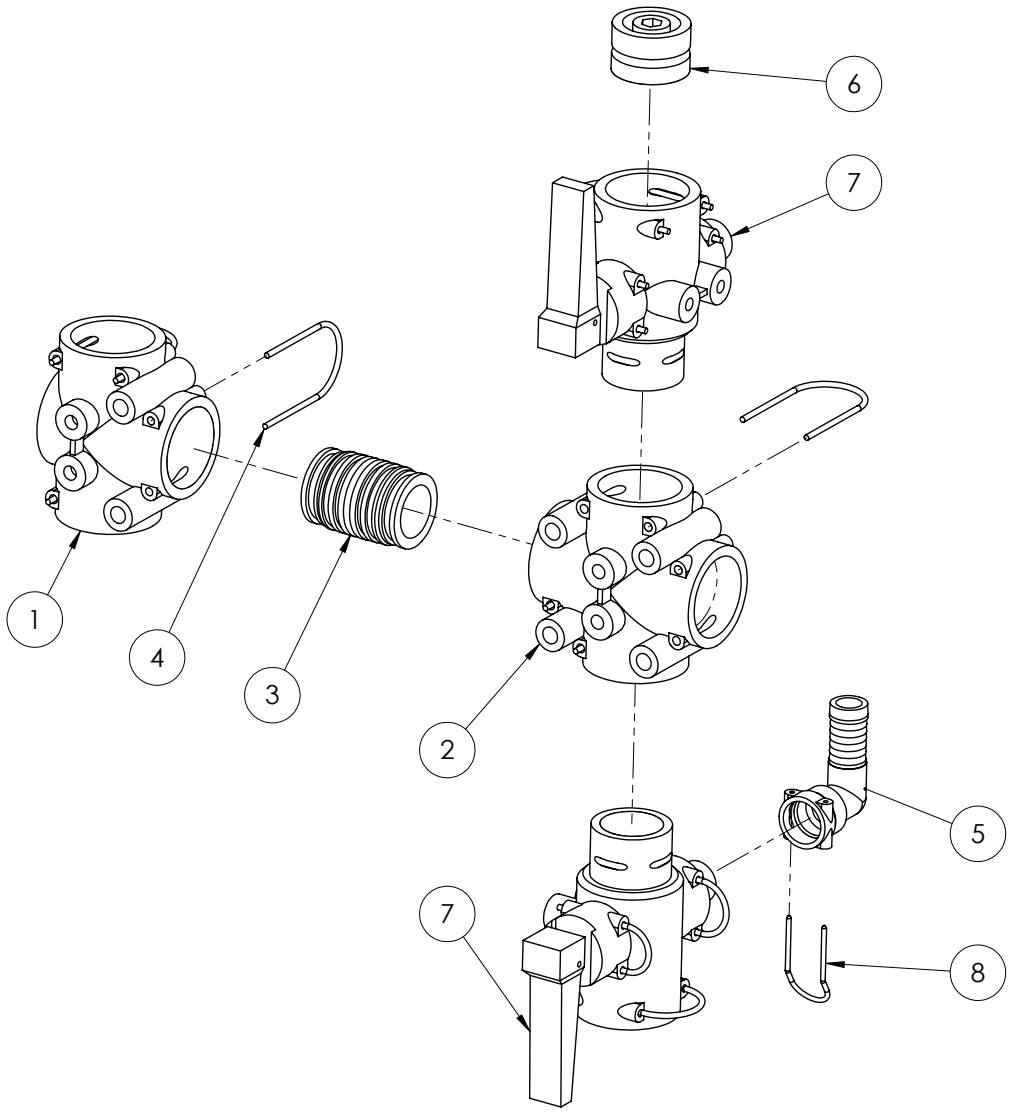

ITEM NO.	PART NUMBER	DESCRIPTION	QTY.
1	GA5065560	Tee, AS40 female, M8 inserts, Altek	1
2	GA5065565	Plumbing coupling, Cross, AS40 female inlets / outlets, Altek	1
3	GA5065735	Plumbing adaptor, AS40 male x AS40 male, Altek	1
4	GA5065690	Safety pin, Suit AS40 plumbing fittings, Altek	6
5	GA5065675	Hose barb, Elbow, 90 degree, AS24 female x 20mm hose, Altek	1
6	GA5065680	Plug, AS40 male, Altek	1
7	GA5065545	Valve, Quick fit flip top, 2 way, AS40 male x AS24 female x AS40 female, Altek	2
8	GA5065695	Safety pin AS24	1

Foam Marker Fill Tap Assembly

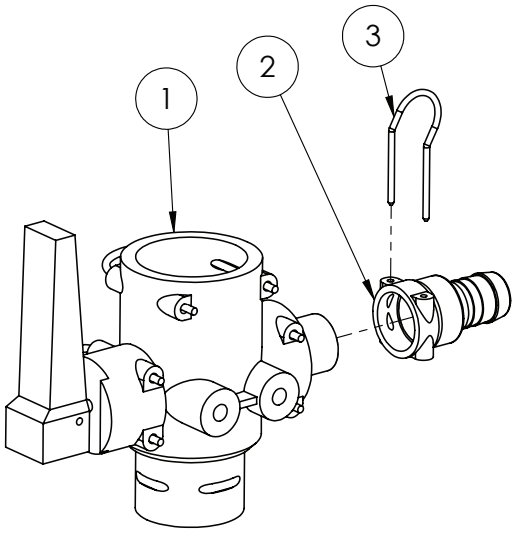

ITEM NO.	PART NUMBER	DESCRIPTION	QTY.
1	GA5065545	Valve, Quick fit flip top, 2 way, AS40 male x AS24 female x AS40 female, Altek	1
2	GA5065640	Hose barb, AS24 female x 20mm hose	1
3	GA5065695	Safety pin AS24	1

Transcal Tap Assembly

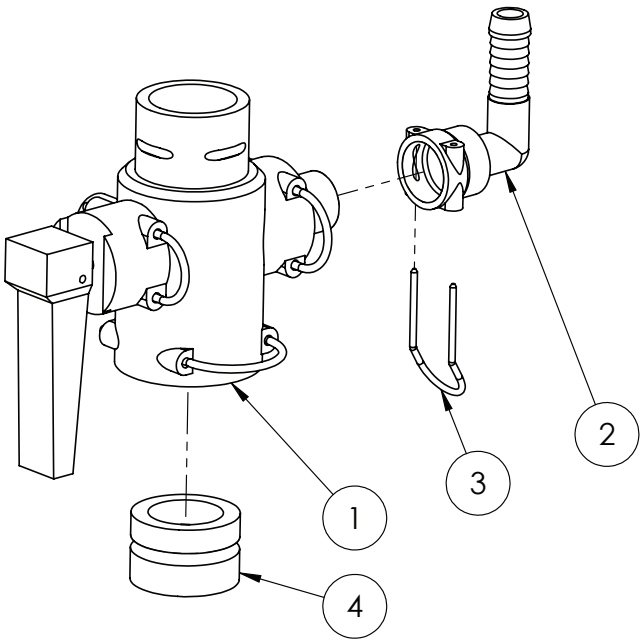

ITEM NO.	PART NUMBER	DESCRIPTION	QTY.
1	GA5065545	Valve, Quick fit flip top, 2 way, AS40 male x AS24 female x AS40 female, Altek	1
2	GA5065750	Hose barb, Elbow, 90 degree, AS24 female x 15mm hose, Altek	1
3	GA5065695	Safety pin AS24	1
4	GA5065680	Plug, AS40 male, Altek	1

Hopper Manifold Assembly

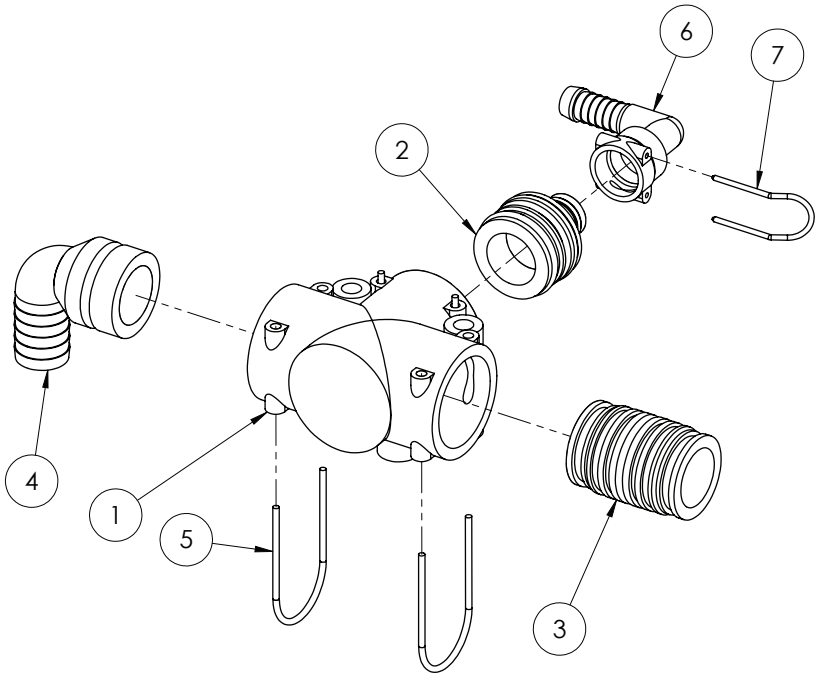

ITEM NO.	PART NUMBER	DESCRIPTION	QTY.
1	GA5065555	Tee, AS40 female, no M8 inserts, Altek	1
2	GA5065605	Plug in adapter, AS40 x AS24, Altek	1
3	GA5065735	Plumbing adaptor, AS40 male x AS40 male, Altek	1
4	GA5065615	Hose barb, Elbow 90 degree, AS40 x 25mm, Altek	1
5	GA5065690	Safety pin, Suit AS40 plumbing fittings, Altek	3
6	GA5065750	Hose barb, Elbow, 90 degree, AS24 female x 15mm hose, Altek	1
7	GA5065695	Safety pin AS24	1

2 Way Valve Assembly

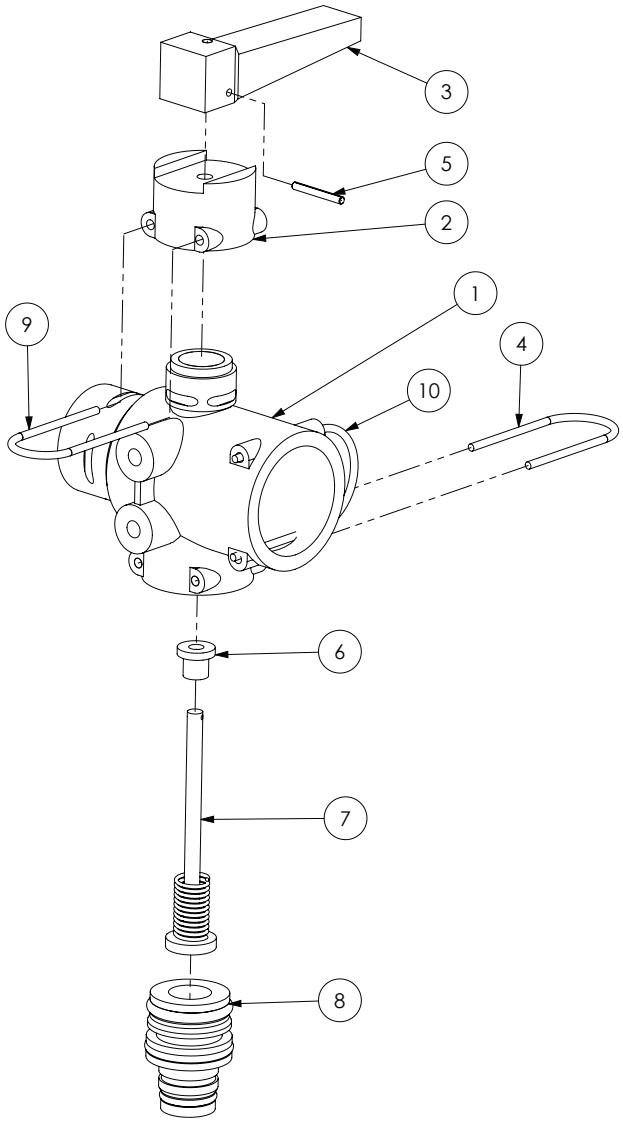

GA5065545 - Valve, Quick fit flip top, 2 way, AS40 male x AS24 female x AS40 female, Altek

ITEM NO.	PART NUMBER	DESCRIPTION	QTY.
1	80487	Body	1
2	80856	Lever cap	1
3	80851	Lever	1
4	GA5065701	Safety pin AS30	1
5	80859	Handle split pin	1
6	81524	Seal	1
7	80858	Plunger	1
8	GA5065835	Plug in adapter, AS30 x AS24, Altek	1
9	47825	Safety pin	1
10	GA5065690	Safety pin AS40	1

4 Way Valve Assembly

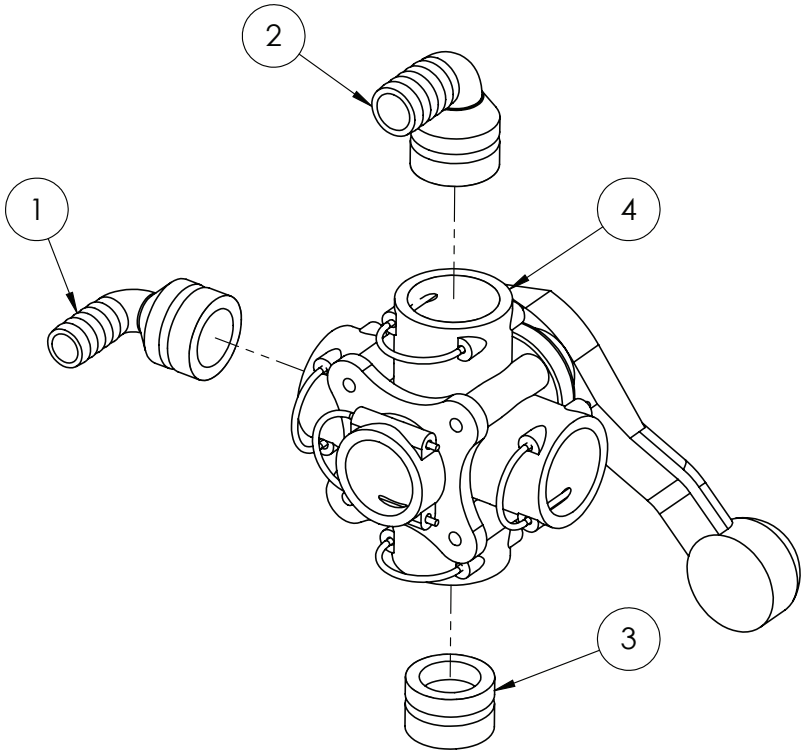

Chemical Transfer Pump Mounting

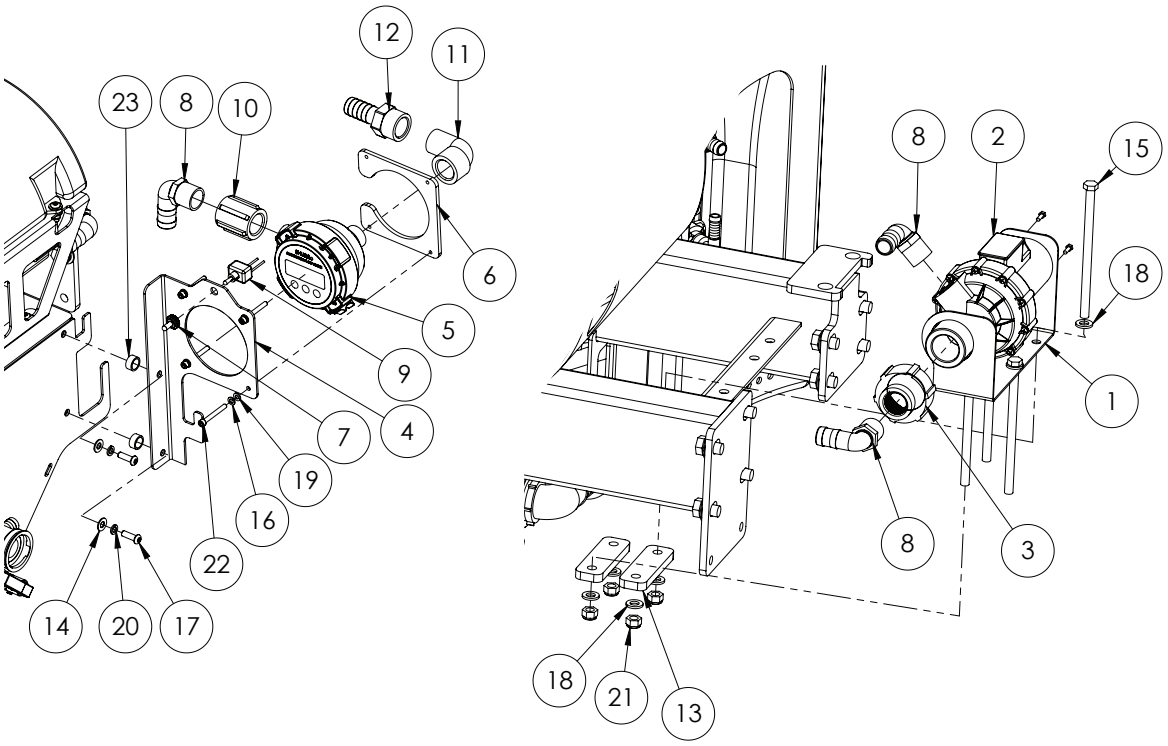

ITEM NO.	PART NUMBER	DESCRIPTION	QTY.
1	GA4508525	Plate, Mount Shurflo Pump, Prairie	1
2	GA2000030	Pump, Diaphragm, Chemical transfer 12v, Viton, Shurflo	1
3	GA2000032	Reducing coupling, 2" female NPT to 1" female NPT, Shurflo	1
4	GA4508530	Plate, Mount Bracket, Shurflo Electronic Flow Meter FM-1100	1
5	GA2000031	Flow meter, Chemical transfer, 90 degree, Shurflo	1
6	GA4508535	Plate, Clamp Bracket, Shurflo Electronic Flow Meter FM-1100	1
7	GA5012175	Cover, Toggle switch, Waterproof	1
8	GA5077723	Hose barb, Elbow, 90 degree, 1" male x 1" hose, Banjo	3
9	GA5016749	Switch, Toggle, On / Off, Water proof	1
10	GA5077638	Coupling, socket, 1" female thread, Banjo	1
11	GA5078137	Street elbow, 90 degree, 1" male x 1" female, Banjo	1
12	GA5077747	Hose barb, Straight, 1" female thread x 1" hose, Banjo	1
13	F70107A	Plate, Clamp, 130 long x 40 wide x 12mm thick	2
14	GA5003643	Washer 8mm Flat SS Heavy Duty	2
15	GA5011223	Bolt M12 x 200 ZP GR 8.8	4
16	GA5004447	Washer, 6mm, Spring, SS	4
17	GA5011473	BHCS M8 x 25 SS	2
18	GA5000577	Washer 12mm Flat SS HD	8
19	GA5004437	Washer 6mm Flat SS	4
20	GA5004919	Washer 8mm Spring SS	2
21	GA5012461	Nut M12 Nyloc ZP	4
22	GA5011421	SHCS M6 x 50 ZP GR12.9	4
23	GA4552070	Crush Tube, 16.2 ID, 20.5 OD, 9.5mm long	2

Chapter 6

DIRECT CHEMICAL INJECTION

DCI Pod

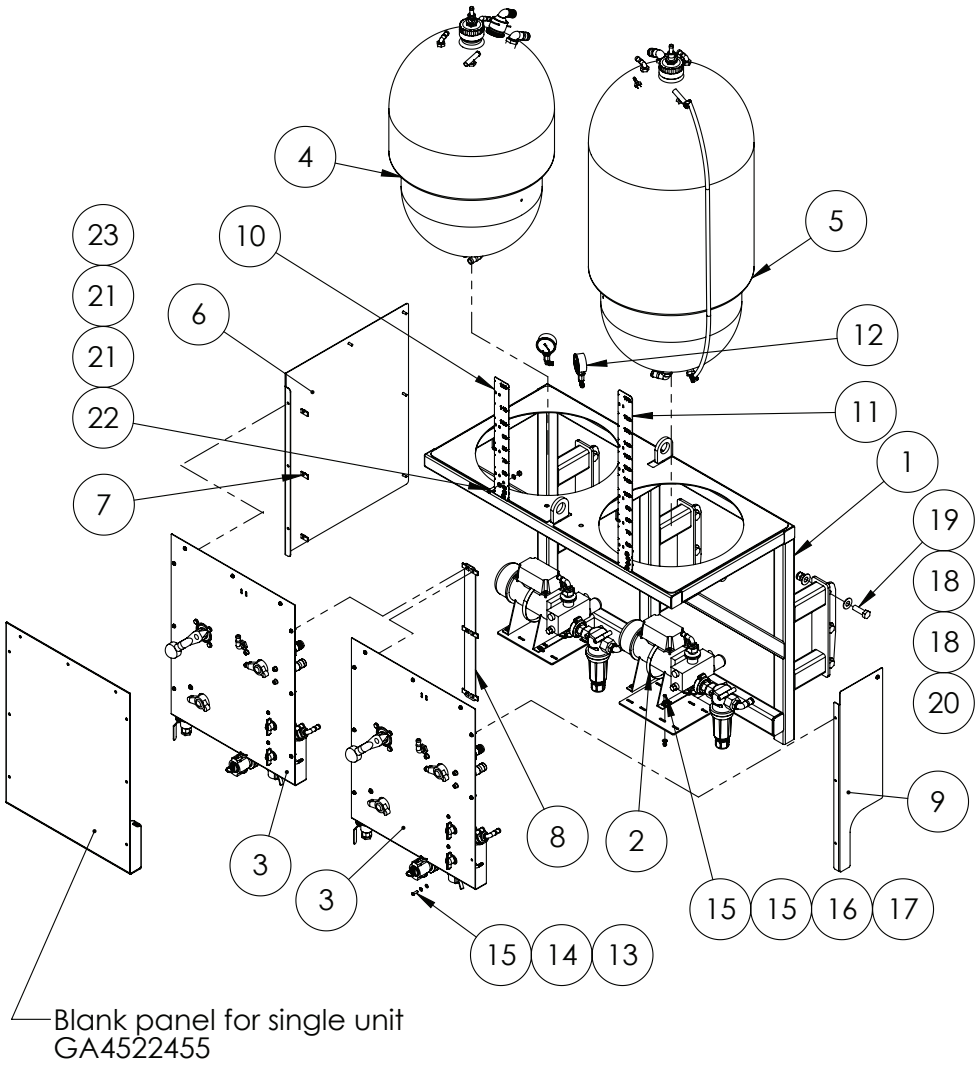

ITEM NO.	PART NUMBER	DESCRIPTION	QTY.
1	GA4656400	Direct Injection Frame narrow	1
2	*	High Volume Pump Assembly - Dual Unit	2
3	*	Cover Plate Assembly	2
4	*	DCI Bottle - 120L Assembly	1
5	*	DCI Bottle - 165L Assembly	1

* Sub-assembly on following pages

Continued over page

DCI Pod

ITEM NO.	PART NUMBER	DESCRIPTION	QTY.
6	GA4502230	Cover suit direct injection (2nd unit)	1
7	GA5066830	Speed clip M6	3
8	*	Panel Alignment Strip Assembly	1
9	GA4533435	Panel DCI Front Bolt on (1.6mm FMS cut & fold)	1
10	GA4523465	125L DCI level gauge	1
11	GA4523470	160L DCI level gauge	1
	GA4523471	160L DCI level gauge x 2 suit dual tanks	
12	*	Vacuum Gauge Assembly	2
13	GA5004437	Washer 6mm Flat SS	23
14	GA5004447	Washer, 6mm, Spring, SS	23
15	GA5004053	BHCS M6 x 20 SS	31
16	GA5017643	Washer, 1/4" ID x 5/8" OD x 18g, Flat SS	16
17	GA5048115	Nut M6 Nyloc ZP	8
18	GA5001043	Washer 16mm Flat SS HD	18
19	GA5000931	Bolt M16 x 50 ZP GR8.8	9
20	GA5001029	Nut M16 Nyloc ZP	9
21	GA5003643	Washer 8mm Flat SS HD	8
22	GA5011473	BHCS M8 x 25 SS	4
23	GA5052590	Nut M8 Nyloc SS	4

* Sub-assembly on following pages

DCI Third Unit Assembly

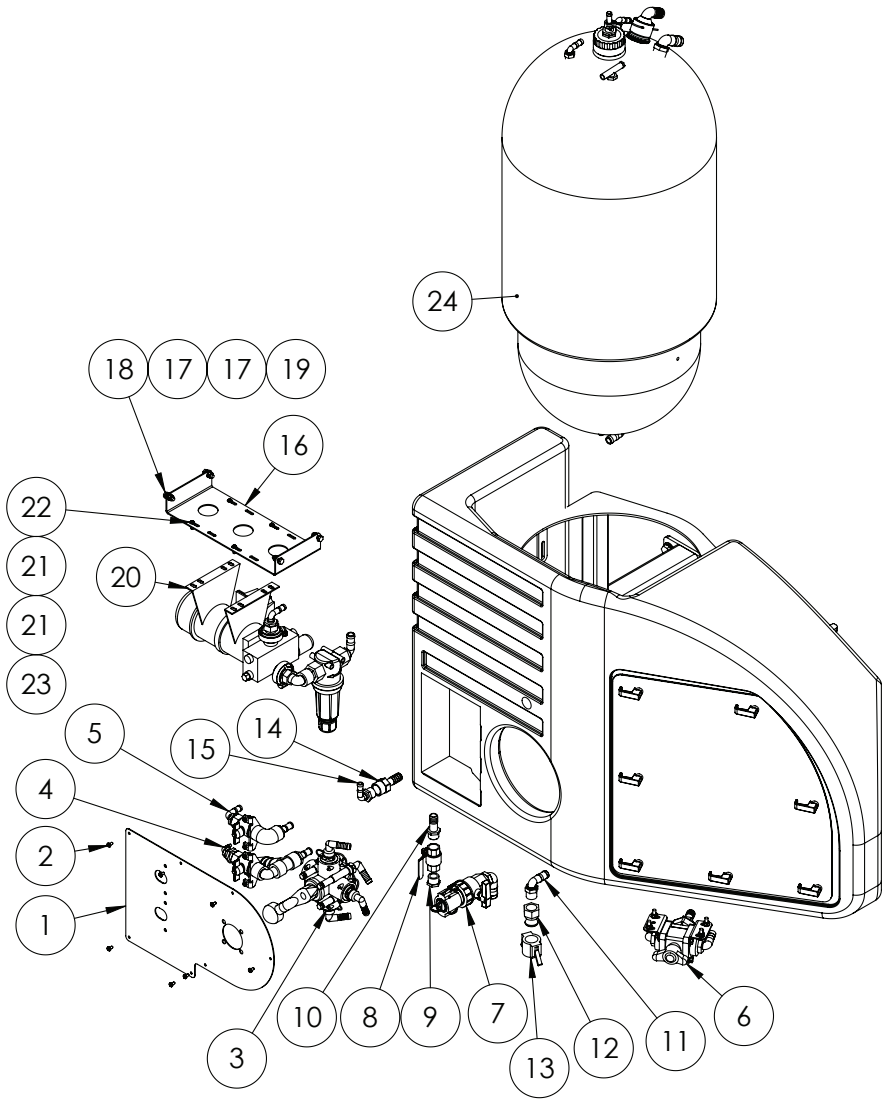

ITEM NO.	PART NUMBER	DESCRIPTION	QTY.
1	GA4502225	3rd DCI panel suit RHS pod	1
2	GA5014821	Screw 12G x 1/2", Self Tapper, SS	7
3	*	Ball Valve Assembly	1
4	*	Tank Vent Ball Valve Assembly	1
5	*	Tank Rinse Ball Valve Assembly	1
6	*	Chemical Pump Suction Valve Assembly - Third Unit	1
7	*	Chemical Probe Coupling Ball Valve Assembly	1
8	GA5018309	Valve, Ball, 12mm female thread inlet / outlet, Lever handle, SS	1
9	GA5077944	Plug, 3/4" male thread, Banjo	1
10	GA5077709	Hose barb, Straight, 3/4" male thread x 3/4" hose, Banjo	1
11	GA5077717	Hose barb, Elbow, 90 degree, 3/4" male thread x 3/4" hose	1
12	GA5077124	Cam lever, 3/4" male coupling x 3/4" female thread, Banjo	1
13	GA5077351	Cap, Poly pipe, 3/4", Banjo	1

* Sub-assembly on following pages

Continued over page

DCI Third Unit Assembly

ITEM NO.	PART NUMBER	DESCRIPTION	QTY.
14	GA5077743	Hose barb, Straight, 3/4" female x 3/4" hose, Banjo	1
15	GA5077710	Hose barb, Elbow, 90 degree, 3/4" male thread x 1/2" hose	1
16	GA4534670	DCI 3rd pump mount	1
17	GA5003643	Washer 8mm Flat SS HD	8
18	GA5004711	Bolt M8 x 25 ZP GR8.8	4
19	GA5004917	Nut M8 Nyloc ZP	4
20	*	High Volume Pump Assembly - Third Unit	1
21	GA5004437	Washer 6mm Flat SS	8
22	GA5004053	BHCS M6 x 20 SS	4
23	GA5048115	Nut M6 Nyloc ZP	4
24	*	DCI Bottle - 120L Assembly	1
	*	DCI Bottle - 165L Assembly	

* Sub-assembly on following pages

DCI Bottle - 120L Assembly

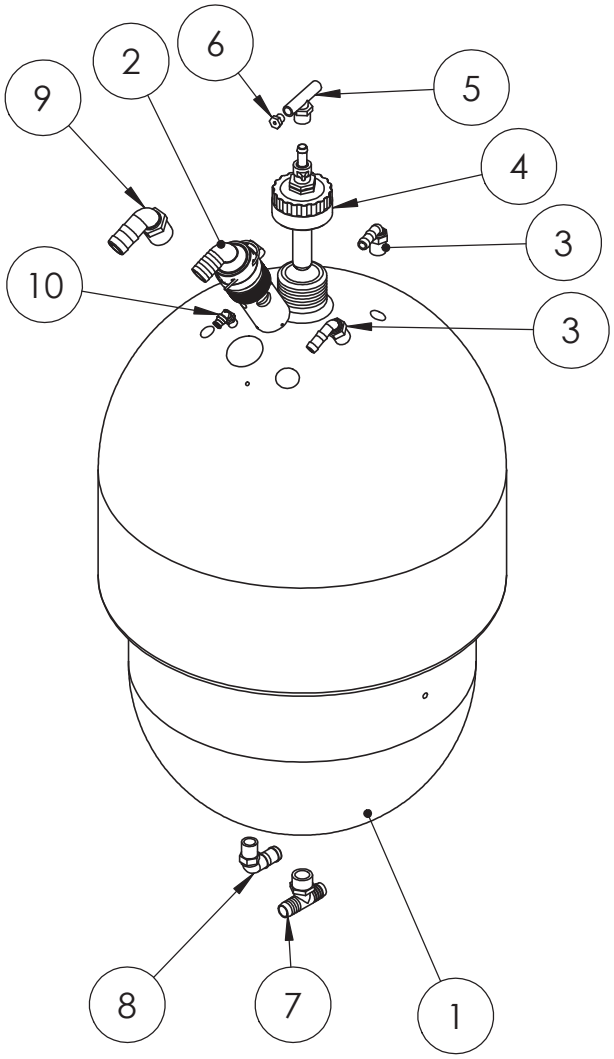

ITEM NO.	PART NUMBER	DESCRIPTION	QTY.
1	GA5020635	Tank, 120L Natural, Exacta Foam/direct inject (Blank)	1
2	*	Fill Shut Off Assembly	1
3	GA5077708	Hose barb, Elbow, 90 degree, 1/2” male thread x 1/2” hose	2
4	GA4903050	Cap, Pre-assembled with rinse nozzle, Suit transcal and DCI	1
5	GA3500391	Tee, Threaded, 1/2" male x 1/2" hose	1
6	A1814	Male Taper Pipe by Hose Barb 1/8” x 1/4”	1
7	GA3500431	Hose barb, Tee, 3/4" hose barb x 3/4" hose barb x 3/4" male thread	1
8	GA5077704	Hose barb, Elbow, 90 degree, 1/2” male thread x 3/4” hose	1
9	GA5077723	Hose barb, Elbow, 90 degree, 1” male x 1” hose	1
10	GA5016235	Swivel Elbow push in Brass 10mm x 1/4” BSP	1

* Sub-assembly on following pages

DCI Bottle - 165L Assembly

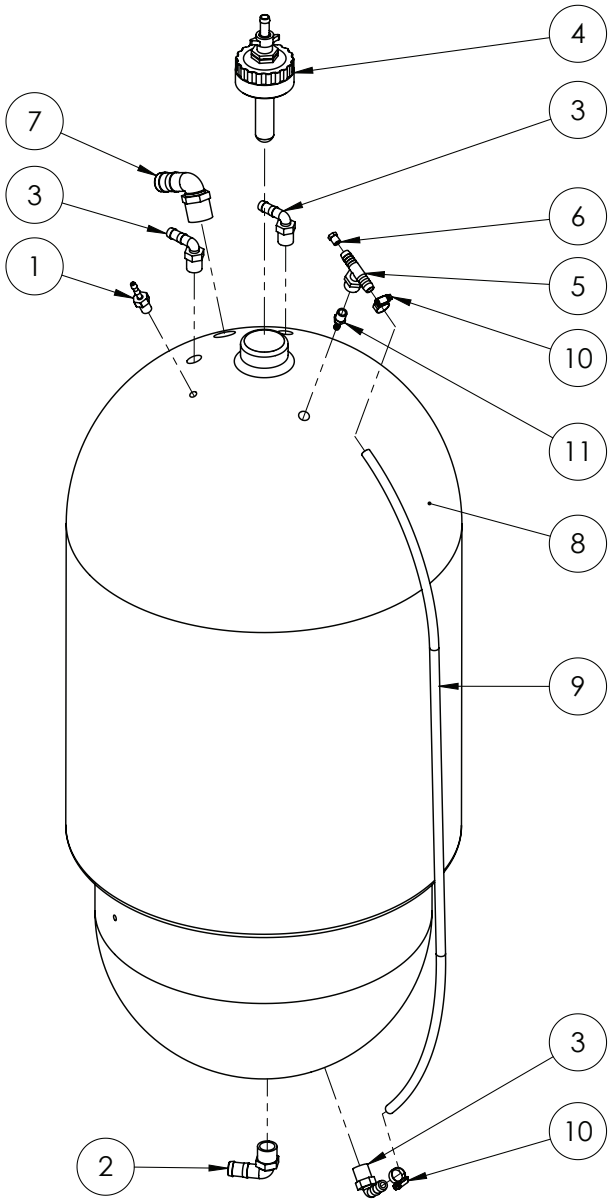

ITEM NO.	PART NUMBER	DESCRIPTION	QTY.
1	GA5077691	Hose barb, Straight, 1/4" male thread x 1/4" hose	1
2	GA5077717	Hose barb, Elbow, 90 degree, 3/4" male thread x 3/4" hose	1
3	GA5077708	Hose barb, Elbow, 90 degree, 1/2" male thread x 1/2" hose	3
4	*	Rinse nozzle and cap complete	1
5	GA3500391	Tee, Threaded, 1/2" male x 1/2" hose	1
6	GA5020695	1/8" Brass Hose Barb with Barb Removed	1
7	GA5077723	Hose barb 90 degree 1"	1
8	GA5018495	Tank 165 L, Natural, Direct Injection	1
9	GA2000210	Hose, 12mm, Clear, Wire reinforced	1
10	GA5000469	Hose clamp, 1/2", SS	2
11	GA5020540	Hose barb, Straight, 1/4" male thread x 1/4" hose, Brass	1

* Sub-assembly on following pages

Fill Shut Off Assembly

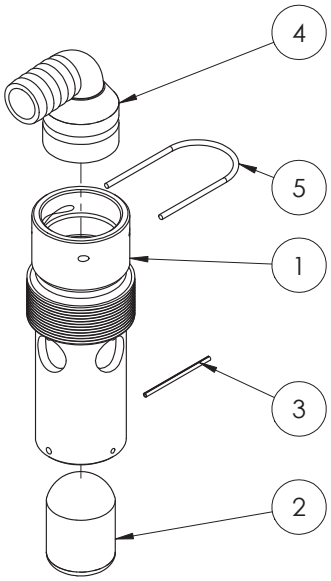

ITEM NO.	PART NUMBER	DESCRIPTION	QTY.
1	GA4552140	Venturi fill stop housing	1
2	GA5066840	Ball float	1
3	GA5066835	Roll Pin 4mm x 50mm Stainless Steel	1
4	GA5065615	Hose barb, Elbow 90 degree, AS40 x 25mm, Altek	1
5	GA5065690	Safety pin, Suit AS40 plumbing fittings, Altek	1

Rinse Nozzle & Cap

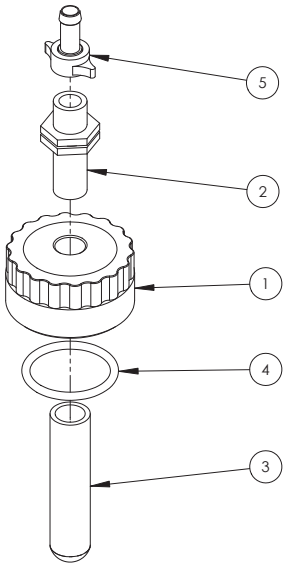

GA4903050 Cap, with rinse nozzle

ITEM NO.	PART NUMBER	DESCRIPTION	QTY.
1	L055A	Cap / Lid, 80 OD, 1/2" BSPP female thread in top, Suit Transcal	1
2	GA5078408	Plumbing fitting, Nipple, 1/2", long	1
3	GA5077063	Nozzle, Drum & container rinsing, ARAG	1
4	GA5009187	O-ring, 60 x 5.5mm, suits Exacta tank cap	1
5	GA5075655	Hose barb, Brass, 13mm hose x fly nut end, ARAG	1

Mixing Chamber

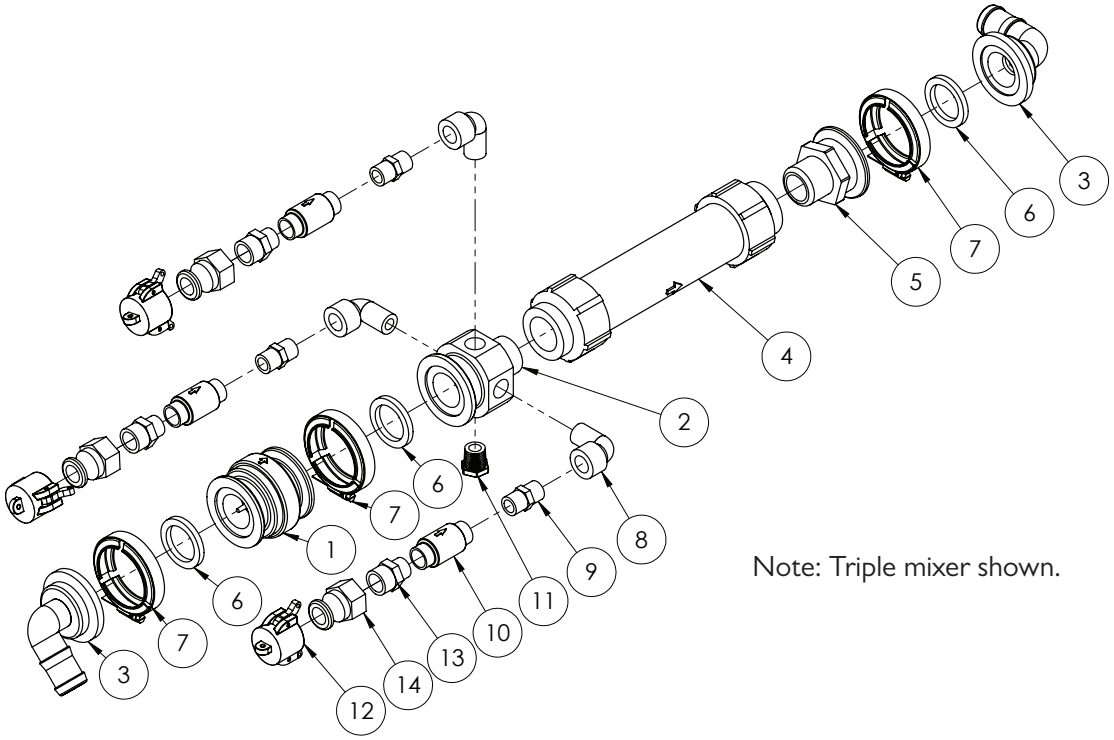

Note: Triple mixer shown.

ITEM NO.	PART NUMBER	DESCRIPTION	QTY.
1	GA5077890	Check Valve, 2" Manifold Flange	1
2	GA4572025	Manifold, 2" flange x 1 1/4" male thread x 1/2" female thread	1
3	GA5077831	Hose barb, Elbow, 90 degree, 2" flange x 1 1/4" hose	2
4	GA5075831	Mixer, Flow Assembly suit DCI 1 1/4" NPT, Raven	1
5	GA5077832	Plumbing adaptor, 2" flange x 1 1/4" male thread	1
6	GA5009335	Seal, 41.5 ID x 55 OD x 6.5mm thick, EPDM, suit 1 1/2" flange	3
7	FC200	Clamp, Worm screw, Use with 2" standard flange port	3
8	GA5078133	Street elbow, 90 degree, 1/2" female thread x 1/2" male thread	3
9	GA5048310	Nipple, 1/2" thread x 1/2" thread, Brass	3
10	GA5051380	Valve, Check, 1/2" female thread inlet / outlet, SS, 200psi maximum	3
11	GA5077943	Plug, 1/2" male thread, Banjo (Triple mixer version)	1
		Plug, 1/2" male thread, Banjo (Twin mixer version)	2
		Plug, 1/2" male thread, Banjo (Single mixer version)	3
12	GA5077131	Cam lever, Female cap, 3/4", Banjo	3
13	GA5078087	Reducing nipple, 3/4" male thread x 1/2" male thread	3
14	GA5077124	Cam lever, 3/4" male coupling x 3/4" female thread	3

Cover Plate Assembly

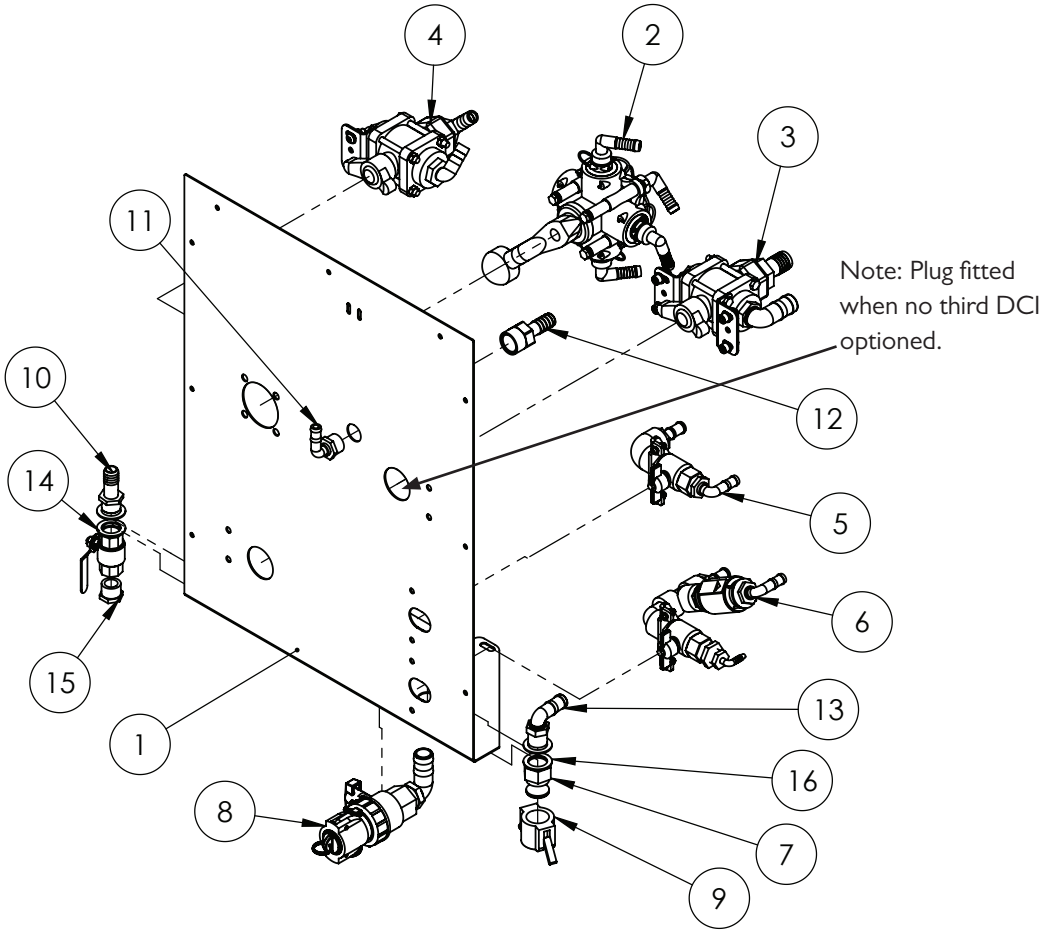

ITEM NO.	PART NUMBER	DESCRIPTION	QTY.
1	GA4502180	Cover for direct chem injection 2mm fms	1
2	*	Ball Valve Assembly	1
3	*	Chemical Tank Vacuum Valve Assembly	1
4	*	Chemical Pump Suction Valve Assembly - Dual Unit	1
5	*	Tank Rinse Ball Valve Assembly	1
6	*	Tank Vent Ball Valve Assembly	1
7	GA5077124	Cam lever, 3/4” male coupling x 3/4” female thread	1
8	*	Chemical Probe Coupling Ball Valve Assembly	1
9	GA5077351	Cap, Poly pipe, 3/4”, Banjo	1
10	GA5077709	Hose barb, Straight, 3/4” male thread x 3/4” hose, Banjo	1
11	GA5077710	Hose barb, Elbow, 90 degree, 3/4” male thread x 1/2” hose	1
12	GA5077743	Hose barb, Straight, 3/4” female x 3/4” hose	1
13	GA5077717	Hose barb, Elbow, 90 degree, 3/4” male thread x 3/4” hose	1
14	GA5018313	Valve, Ball, 20mm female thread inlet / outlet, Lever handle, SS	1
15	GA5077944	Plug, 3/4” male thread, Banjo	1
16	GA4522315	Washer, 27 ID x 40 OD x 2mm thick, SS	4

* Sub-assembly on following pages

High Volume Pump - Dual Unit

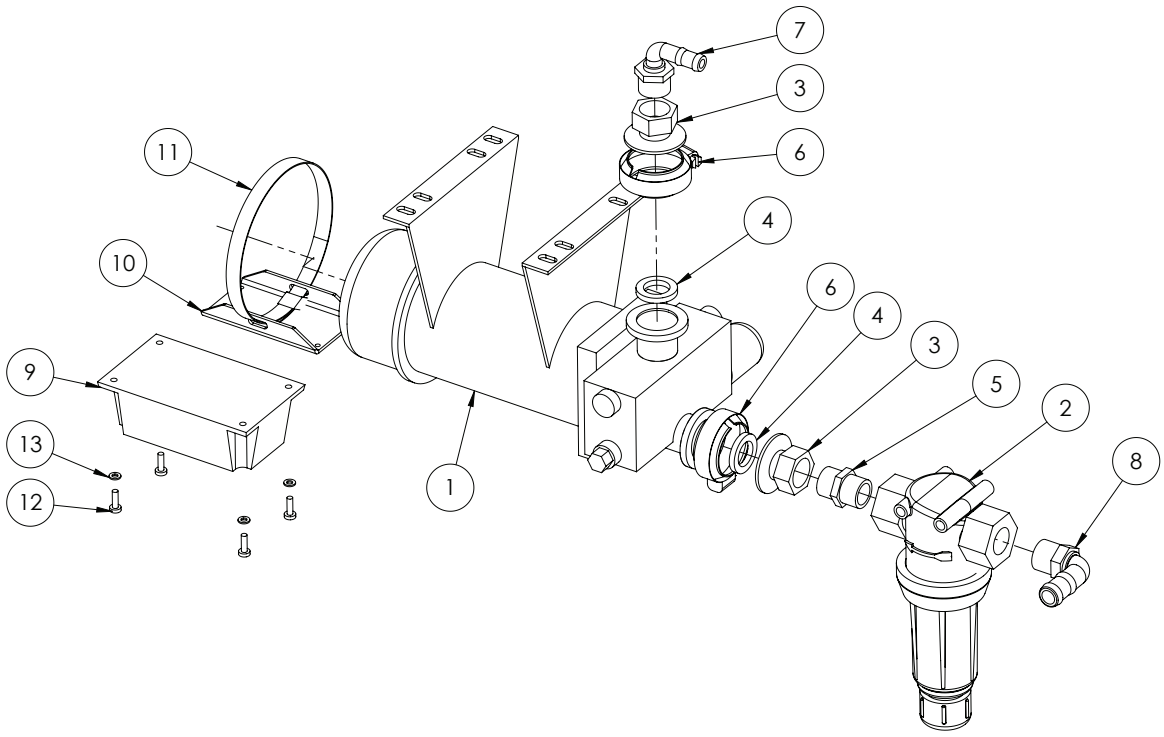

ITEM NO.	PART NUMBER	DESCRIPTION	QTY.
-	GA5076028	Cover, Enclosure suit DCI Pump, Raven	-
1	GA5075914	Pump, DCI Injection, 5-200 oz/min (high vol), 3/4", Raven	1
	GA5075924	Pump, DCI Injection, 1-40 oz/min (low vol), 3/4", Raven	1
2	GA5077271	Filter, 3/4" female thread inlet / outlet, Orange 200 mesh screen	1
3	GA5077804	Coupling, 1" flange x 3/4" female thread, Banjo	2
4	GA5009341	Gasket kamlock nitrile 3/4 FIT075	2
5	GA5077913	Nipple, 3/4" male x 3/4" male, Short, Banjo	1
6	FC100	Clamp, Worm screw, Use with 1" standard flange port, Banjo	2
7	GA5077710	Hose barb, Elbow, 90 degree, 3/4" male thread x 1/2" hose	1
8	GA5077717	Hose barb, Elbow, 90 degree, 3/4" male thread x 3/4" hose	1
9	GA5075919	Node, DCI Pump, CAN, Raven	1
10	GA4537345	Bracket, CAN node mount suit DCI pump, Raven	1
11	GA5053945	Hose Clamp Quick release 51mm - 130mm (PK 10)	1
12	GA5003977	Bolt M5 x 16 Pan Head SS A2-70	4
13	GA5003983	Washer 5mm Flat SS	4

High Volume Pump - Third Unit

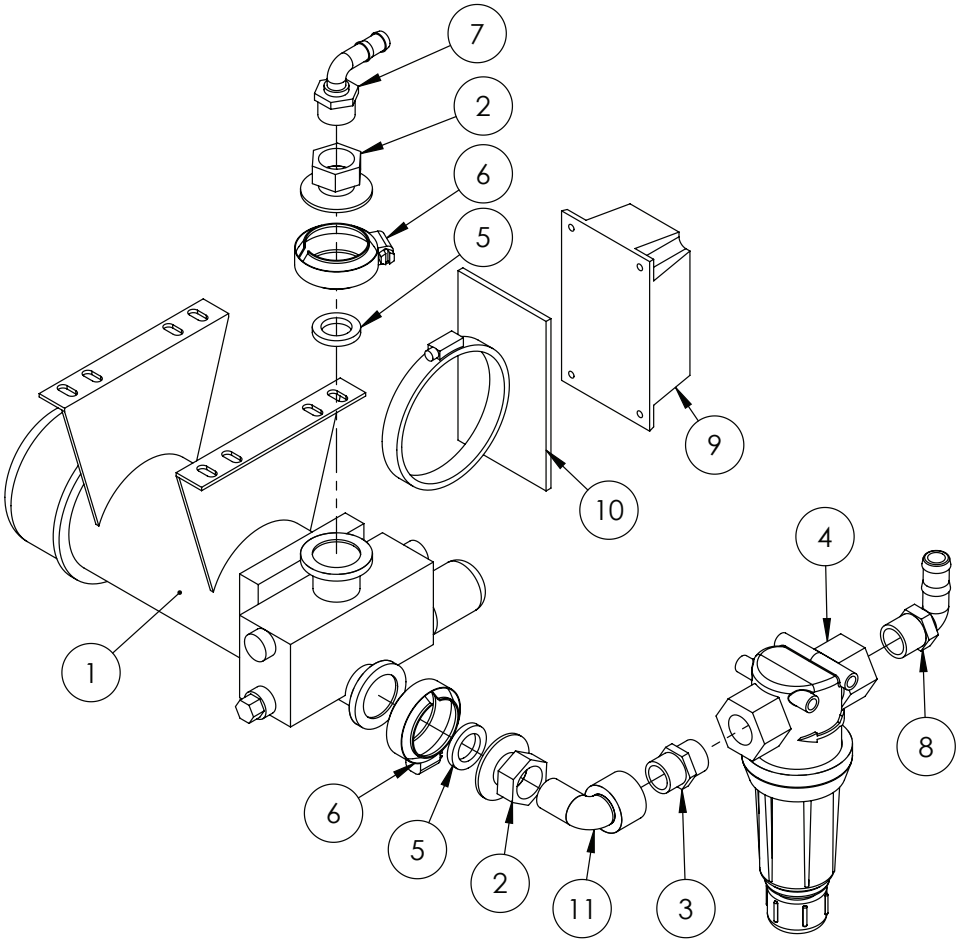

ITEM NO.	PART NUMBER	DESCRIPTION	QTY.
1	GA5075914	Pump, DCI Injection, 5-200 oz/min (high vol), 3/4", Raven	1
2	GA5077804	Coupling, 1" flange x 3/4" female thread, Banjo	2
3	GA5077913	Nipple, 3/4" male x 3/4" male, Short, Banjo	1
4	GA5077271	Filter, 3/4" female thread inlet / outlet, Yellow 30 mesh screen	1
5	GA5009341	Gasket kamlock nitrile 3/4" (FIT 075)	2
6	FC100	Clamp, Worm screw, Use with 1" standard flange port, Banjo	2
7	GA5077710	Hose barb, Elbow, 90 degree, 3/4" male thread x 1/2" hose	1
8	GA5077717	Hose barb, Elbow, 90 degree, 3/4" male thread x 3/4" hose	1
9	GA5075919	Node, DCI Pump, CAN, Raven	1
10	GA5076311	Bracket, CAN node mount suit DCI pump, Raven	1
11	GA5078135	Street elbow, 90 degree, 3/4" female thread x 3/4" male thread	1

Panel Alignment Strip

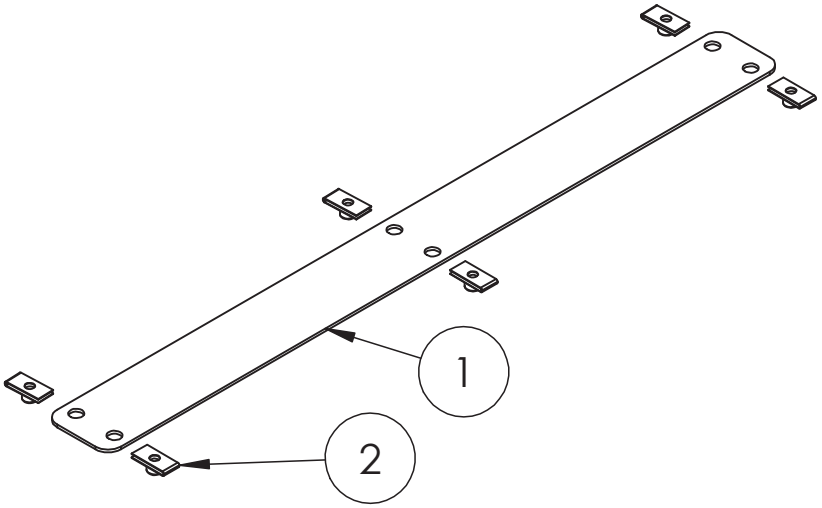

ITEM NO.	PART NUMBER	DESCRIPTION	QTY.
1	GA4502235	Direct injection alignment strip	1
2	GA5066830	Speed clip M6	6

Vacuum Gauge Assembly

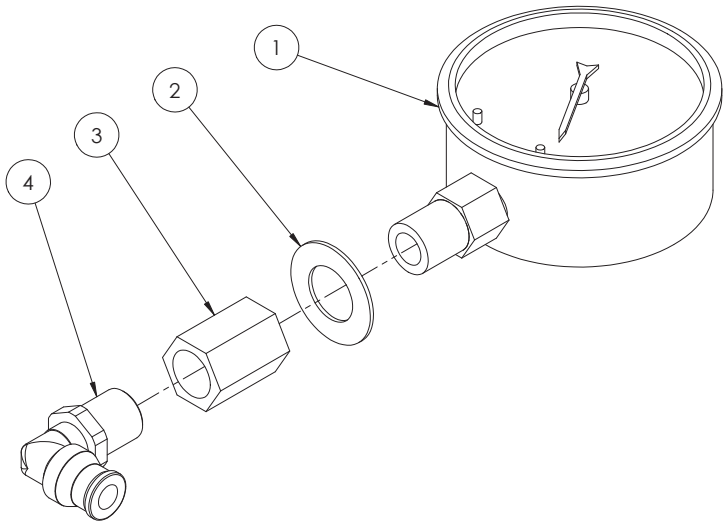

ITEM NO.	PART NUMBER	DESCRIPTION	QTY.
1	GA5051030	Gauge small Vacuum -100-0 kpa	1
2	GA5017641	Washer 1/2" x 1" x 16g Flat SS	1
3	GA5066940	Socket, 1/4" female thread, Hex, Brass	1
4	GA5016235	Swivel Elbow push in Brass 10mm x 1/4" BSP	1

Ball Valve Assembly

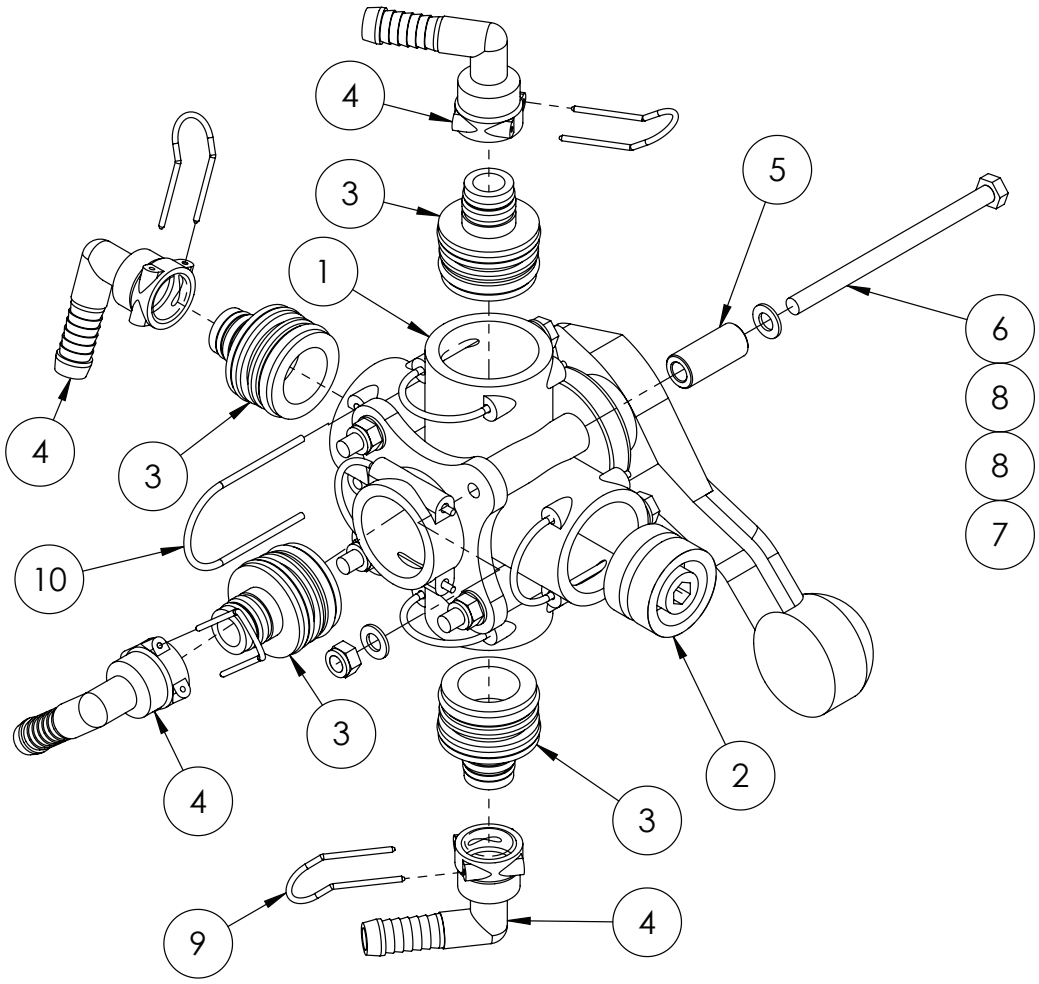

ITEM NO.	PART NUMBER	DESCRIPTION	QTY.
-	GA5065531	Handle, Red plastic, Suit 5 way ball valve, Altek	-
1	GA5065530	Valve,Ball, 5 x AS40 female inlet / outlets, Lever handle, Altek	1
2	GA5065680	Plug, AS40 male, Altek	1
3	GA5065605	Plug in adapter, AS40 x AS24, Altek	4
4	GA5065750	Hose barb, Elbow, 90 degree, AS24 female x 15mm hose, Altek	4
5	GA4552135	Spacer for Altek rotary valve	4
6	GA5011501	Bolt M8 x 120 ZP GR8.8	4
7	GA5004917	Nut M8 Nyloc ZP	4
8	GA5003643	Washer 8mm Flat SS HD	4
9	GA5065695	Safety pin AS24	4
10	GA5065690	Safety pin, Suit AS40 plumbing fittings, Altek	5

Chemical Pump Suction Valve - Dual Unit

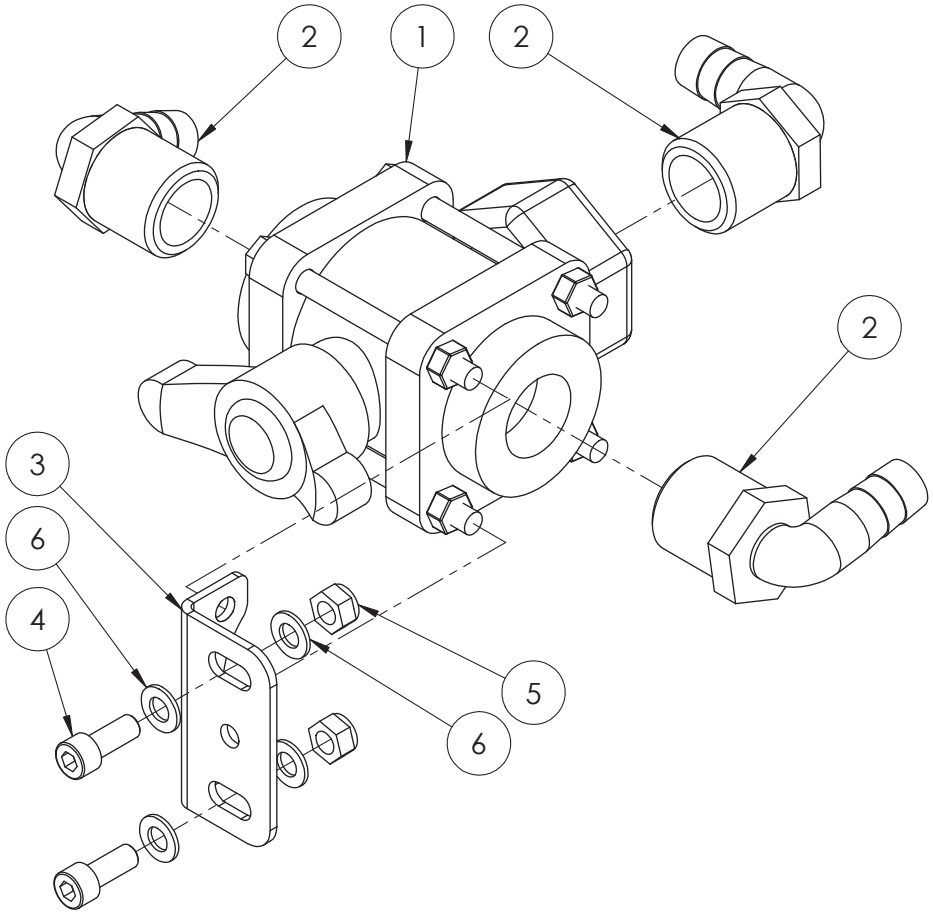

ITEM NO.	PART NUMBER	DESCRIPTION	QTY.
1	GA5078177	Valve, Ball, 3 way, 1 female thread inlet / outlet, Bottom port, Butterfly handle, Banjo	1
2	GA5077719	Hose barb, Elbow, 90 degree, 1" male thread x 3/4" hose	3
3	GA4502210	Mounting plate, to suit ball valve	1
4	GA5004707	SHCS M8 x 20 ZP GR12.9	2
5	GA5004917	Nut M8 Nyloc ZP	2
6	GA5003643	Washer 8mm Flat SS HD	4

Chemical Pump Suction Valve - Third Unit

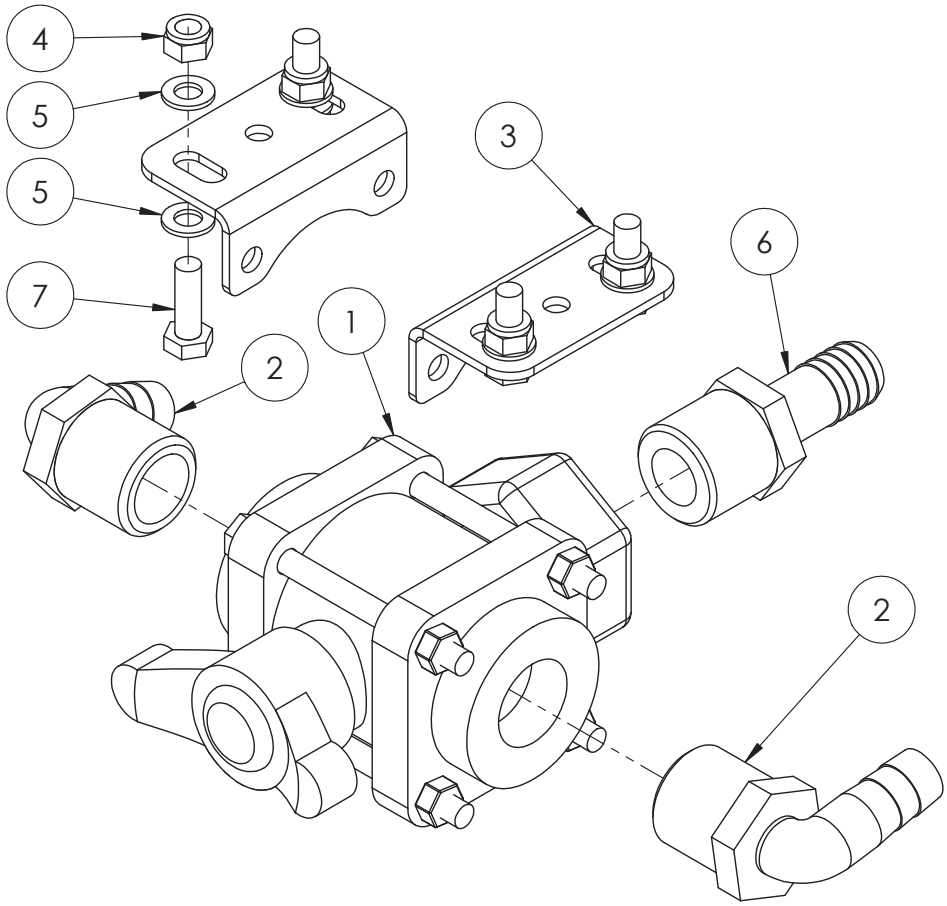

ITEM NO.	PART NUMBER	DESCRIPTION	QTY.
1	GA5078177	Valve, Ball, 3 way, 1 female thread inlet / outlet, Bottom port, Butterfly handle, Banjo	1
2	GA5077719	Hose barb, Elbow, 90 degree, 1" male thread x 3/4" hose, Banjo	2
3	GA4502210	Mounting plate, to suit ball valve	2
4	GA5004917	Nut M8 Nyloc ZP	4
5	GA5003643	Washer 8mm Flat SS HD	8
6	GA5077709	Hose barb, Straight, 3/4" male thread x 3/4" hose, Banjo	1
7	GA5004711	Bolt M8 x 25 ZP GR8.8	4

Chemical Tank Vacuum Valve Assembly

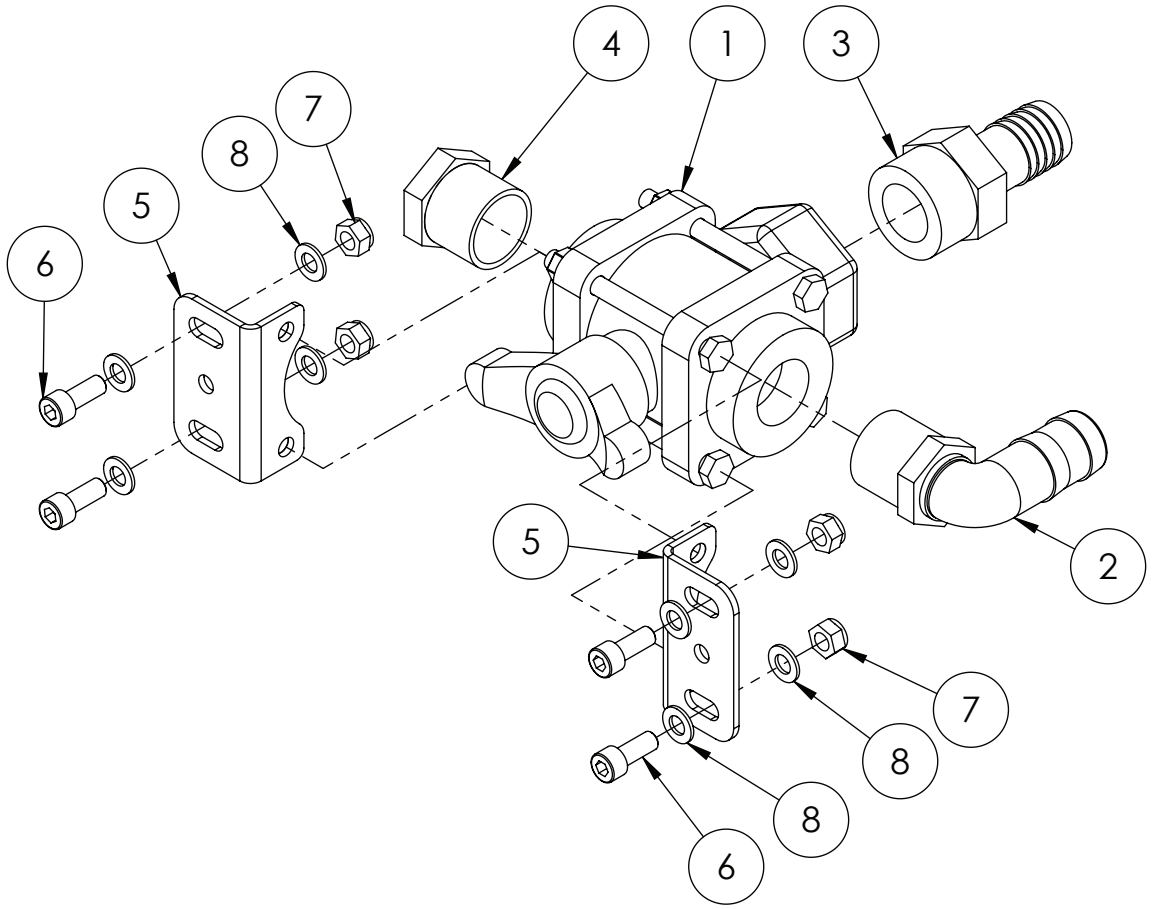

ITEM NO.	PART NUMBER	DESCRIPTION	QTY.
1	GA5078177	Valve, Ball, 3 way, 1" female thread inlet / outlet, Bottom port, Butterfly handle, Banjo	1
2	GA5077723	Hose barb, Elbow, 90 degree, 1" male x 1" hose, Banjo	1
3	GA5077718	Hose barb, Straight, 1" male thread x 1" hose, Banjo	1
4	GA5077945	Plug, 1" male thread, Banjo	1
5	GA4502210	Mounting plate, to suit ball valve	2
6	GA5004707	SHCS M8 x 20 ZP GR12.9	4
7	GA5004917	Nut M8 Nyloc ZP	4
8	GA5003643	Washer 8mm Flat SS HD	8

Tank Rinse Ball Valve Assembly

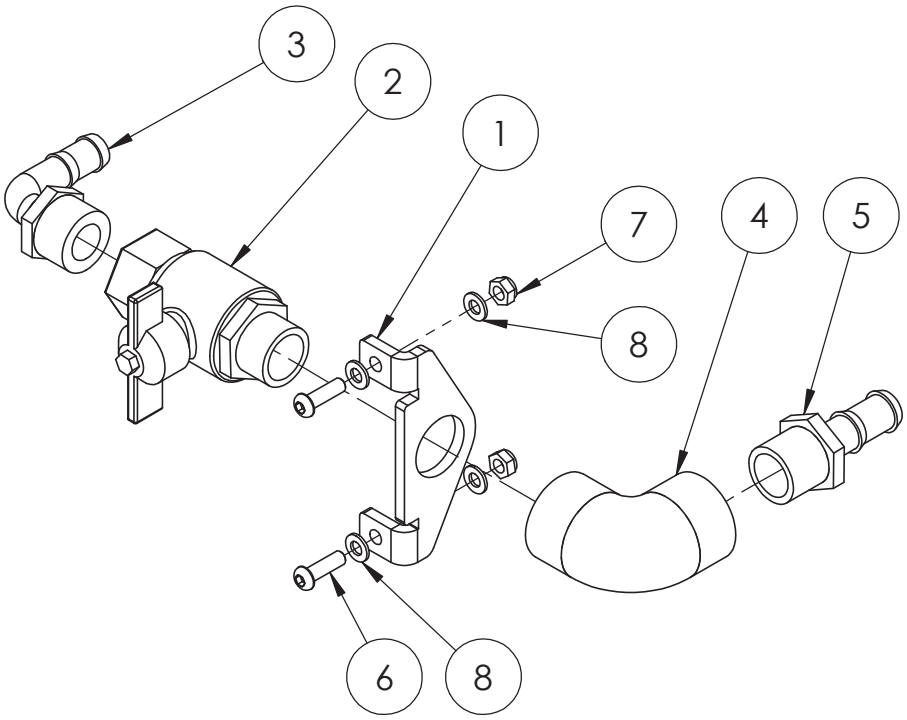

ITEM NO.	PART NUMBER	DESCRIPTION	QTY.
1	F70648A	Tap mounting plate	1
2	GA5018315	Valve, Ball, 20mm male & female thread, Black Butterfly handle	1
3	GA5077710	Hose barb, Elbow, 90 degree, 3/4” male thread x 1/2” hose	1
4	GA5077653	Street elbow, 90 degree, 3/4” female thread, Banjo	1
5	GA5077713	Hose barb, Straight, 3/4” male thread x 1/2” hose, Banjo	1
6	GA5004053	BHCS M6 x 20 SS	2
7	GA5048115	Nut M6 Nyloc ZP	2
8	GA5004437	Washer 6mm Flat SS	4
9	GA5001893	Washer 1” x 1 7/8” x 14G	1

Tank Vent Ball Valve Assembly

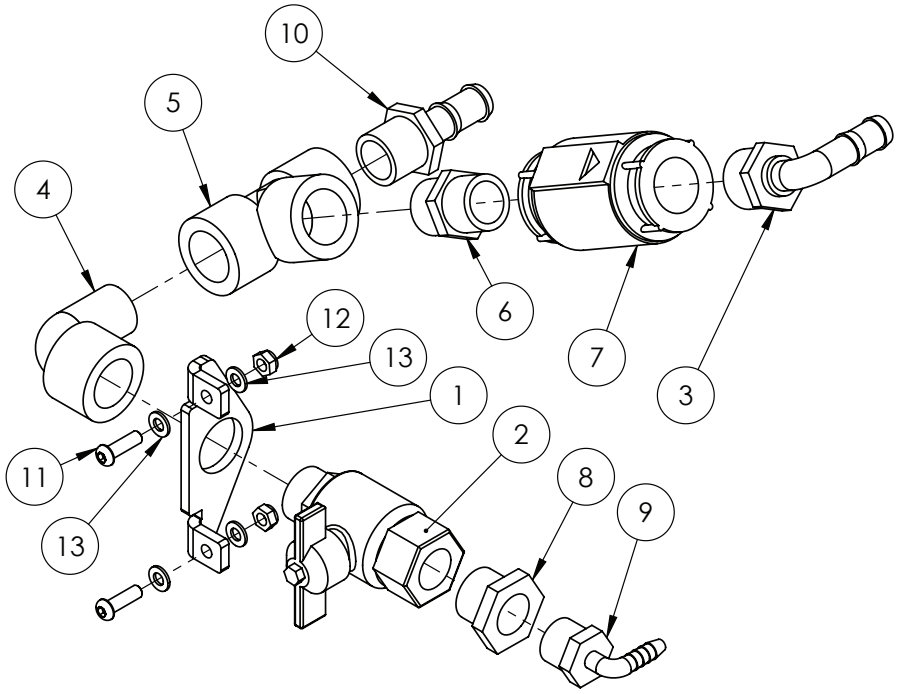

ITEM NO.	PART NUMBER	DESCRIPTION	QTY.
1	F70648A	Tap mounting plate	1
2	GA5018315	Valve, Ball, 20mm male & female thread, Black Butterfly handle	1
3	GA5077708	Hose barb, Elbow, 90 degree, 1/2” male thread x 1/2” hose	1
4	GA5078135	Street elbow, 90 degree, 3/4” female thread x 3/4” male thread	1
5	GA5078150	Tee, Threaded, 3/4” female, Banjo	1
6	GA5078087	Reducing nipple, 3/4” male thread x 1/2” male thread	1
7	GA5051380	Valve, Check, 1/2" female thread inlet / outlet, SS, 200psi maximum	1
8	GA5078010	Reducing bush, 3/4” male thread x 1/2” female thread	1
9	GA5077656	Hose barb, Elbow, 90 degree, 1/2" male thread x 1/4" hose	1
10	GA5077713	Hose barb, Straight, 3/4” male thread x 1/2” hose	1
11	GA5004053	BHCS M6 x 20 SS	2
12	GA5048115	Nut M6 Nyloc ZP	2
13	GA5004437	Washer 6mm Flat SS	4

Chemical Probe Coupling Valve Assembly

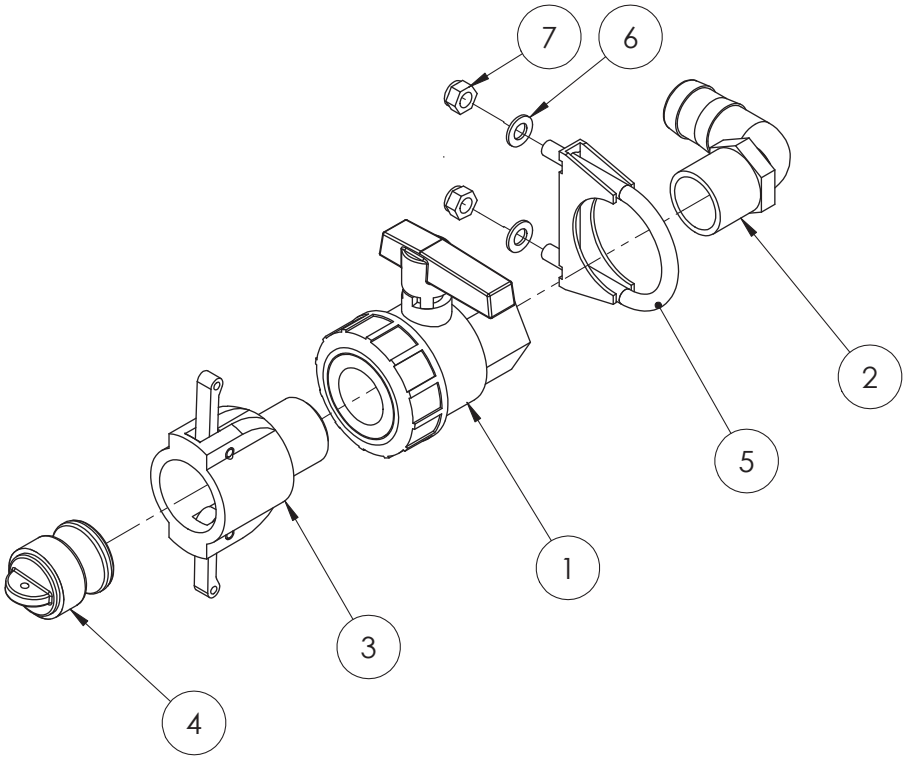

ITEM NO.	PART NUMBER	DESCRIPTION	QTY.
1	GA5078164	Valve, Ball, 1 female thread inlet / outlet, Full port, Lever handle	1
2	GA5077723	Hose barb, Elbow, 90 degree, 1" male x 1" hose, Banjo	1
3	GA5076007	Cam lever, 1" female coupler, 1" male thread, Banjo	1
4	GA5076013	Cam lever, Male plug, 1", Banjo	1
5	GA5006705	Exhaust clamp C8 2"	1
6	GA5003643	Washer 8mm Flat SS HD	2
7	GA5052590	Nut M8 Nyloc SS	2

Chapter 7

DUAL PRODUCT

Ramsay Valve Assembly

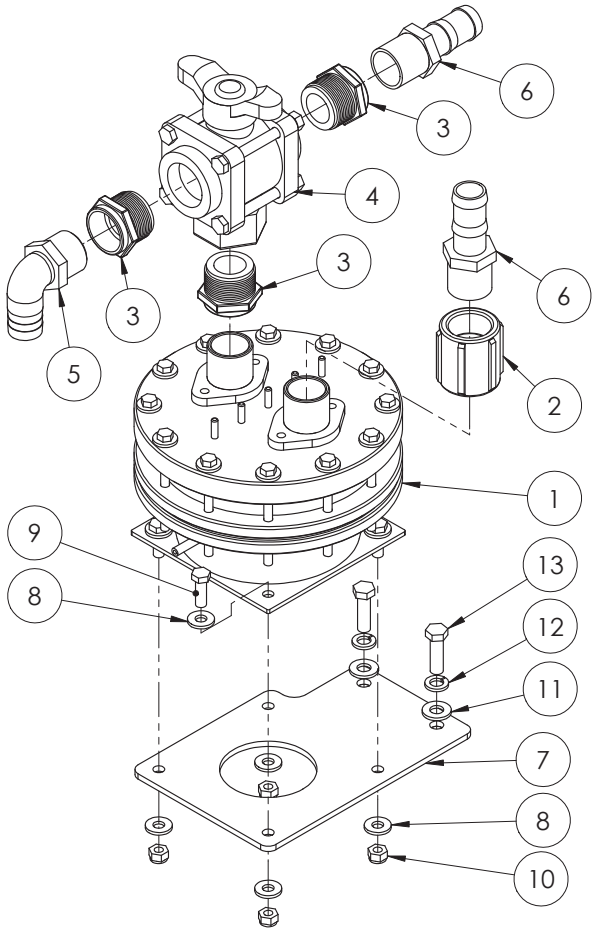

ITEM NO.	PART NUMBER	DESCRIPTION	QTY.
-	GA5061045	Replacement Diaphragm Kit	-
1	GA5010315	Valve, Pressure regulating, High pressure 1 1/4", Viton seals, Ramsay Nocton	1
2	GA5077639	Coupling, socket, 1 1/4” female thread, Banjo	1
3	GA5078019	Reducing bush, 1 1/2” male thread x 1 1/4” female thread	3
4	GA5078186	Valve, Ball, 3 Way, Bottom Load, 1 1/2” NPT Female	1
5	GA5077730	Hose barb, Elbow, 90 degree, 1 1/4” male thread x 1 1/4” hose	1
6	GA5077724	Hose barb, Straight, 1 1/4” male thread x 1 1/4” hose, Banjo	2
7	GA4522105	Ramsay valve chassis mount plate	1
8	GA5000117	Washer 10mm Flat SS HD	8

Continued over page

Ramsay Valve Assembly

ITEM NO.	PART NUMBER	DESCRIPTION	QTY.
9	GA5065455	Bolt M10 x 30 ZP GR8.8	4
10	GA5000141	Nut M10 Nyloc ZP	4
11	GA5000577	Washer 12mm Flat SS HD	2
12	GA5000575	Washer 12mm Spring SS	2
13	GA5066895	Bolt M12 x 40 ZP GR8.8	2

Dual Product & DCI Mixer

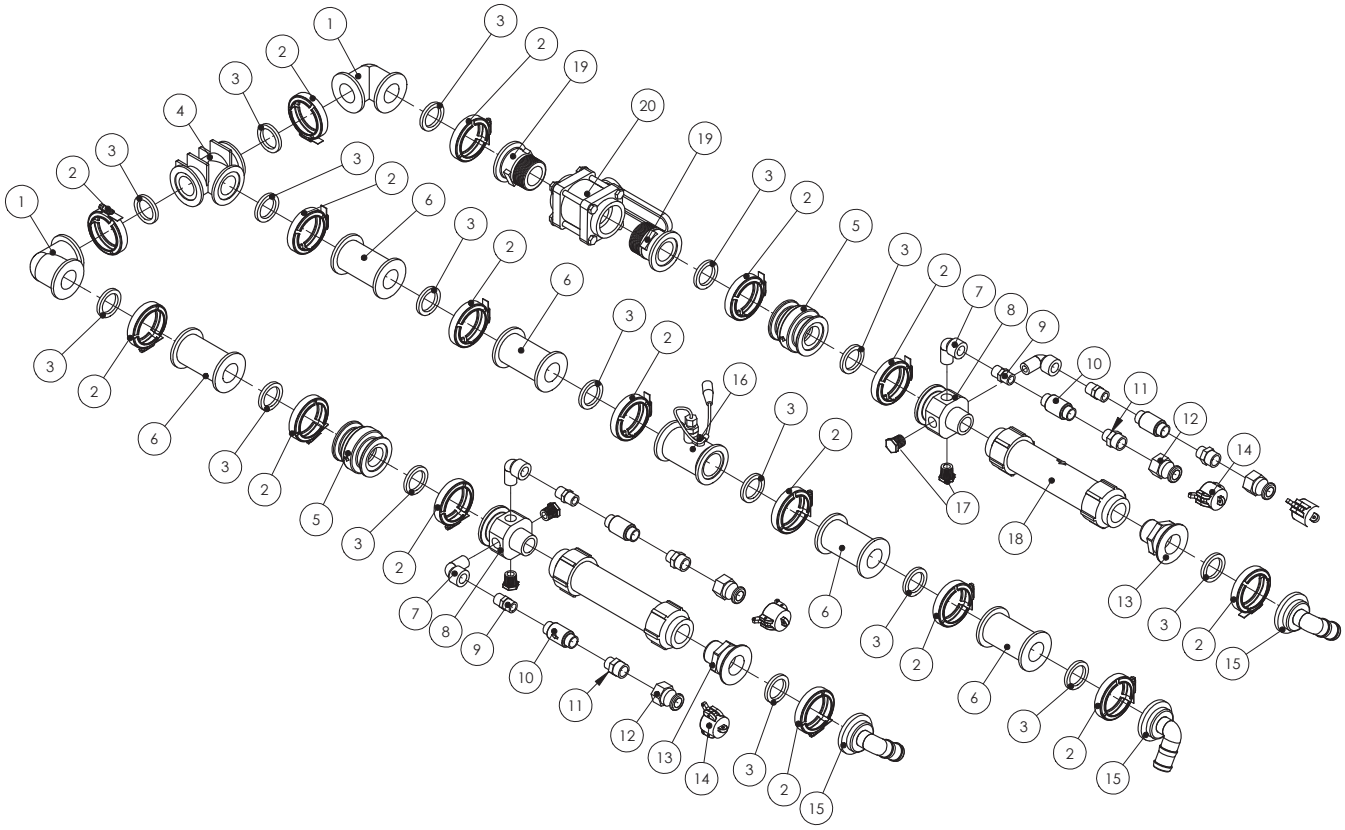

ITEM NO.	PART NUMBER	DESCRIPTION	QTY.
1	GA5077843	Elbow, 90 degree, Short, 2" flange x 2" flange, Banjo	2
2	FC200	Clamp, Worm screw, Use with 2” standard flange port, Banjo	16
3	GA5009335	Seal, 41.5 ID x 55 OD x 6.5mm thick, EPDM, suit 1 1/2” flange	16
4	GA5077854	2” Flanged Tee Fitting	1
5	GA5077890	Check Valve, 2" Manifold Flange, Banjo	2
6	GA5077840	Plumbing coupling, Straight, 2” flange x 2” flange x 4 1/2” long	5
7	GA5078133	Street elbow, 90 degree, 1/2” female thread x 1/2” male thread	4
8	GA4572025	Manifold, 2" flange x 1 1/4" male thread x 1/2" female thread	2
9	GA5048310	Nipple, 1/2” thread x 1/2” thread, Brass	4

Continued over page

Dual Product & DCI Mixer

ITEM NO.	PART NUMBER	DESCRIPTION	QTY.
10	GA5051380	Valve, Check, 1/2” female thread inlet / outlet, SS, 200psi maximum	4
11	GA5078087	Reducing nipple, 3/4” male thread x 1/2” male thread, Banjo	4
12	GA5077124	Cam lever, 3/4” male coupling x 3/4” female thread, Banjo	4
13	GA5077832	Plumbing adaptor, 2” flange x 1 1/4” male thread, Banjo	2
14	GA5077131	Cam lever, Female cap, 3/4”, Banjo	4
15	GA5077831	Hose barb, Elbow, 90 degree, 2” flange x 1 1/4” hose, Banjo	3
16	GA5075873	Flowmeter, RFM60P, Raven	1
17	GA5077943	Plug, 1/2” male thread, Banjo	4
18	GA5075831	Mixer, Flow Assembly suit DCI, 1 1/4” NPT, Raven	2
19	GA5077839	2” Manifold Male thread, Connect - BSP	2
20	GA5078188	Valve, Bolted, 2” female thread inlet / outlet, Lever handle	1

Dual Pressure Filters

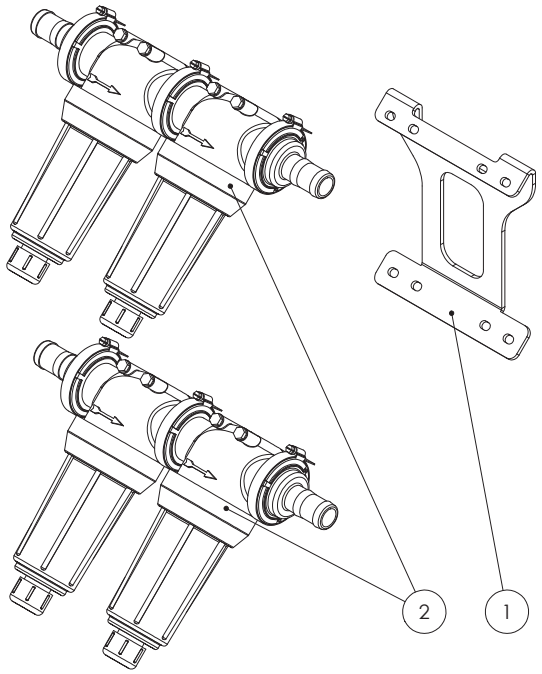

ITEM NO.	PART NUMBER	DESCRIPTION	QTY.
1	GA4657155	Dual pressure filter mount	1
2	^	Dual Pressure Filter Assembly	2

^ See Chapter 19 ‘Plumbing’ for sub-assembly.

Dual Product Manifold

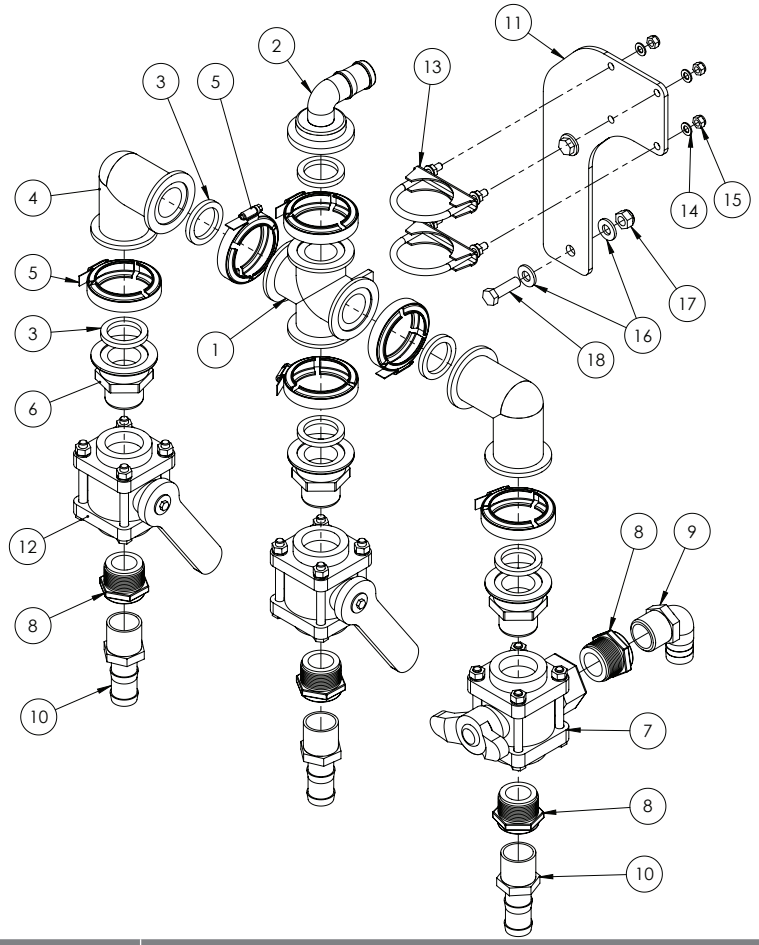

ITEM NO.	PART NUMBER	DESCRIPTION	QTY.
1	GA5077844	2” Flanged Cross	1
2	GA5077831	Hose barb, Elbow, 90 degree, 2” flange x 1 1/4” hose, Banjo	1
3	GA5009335	Seal, 41.5 ID x 55 OD x 6.5mm thick, EPDM, suit 1 1/2” flange	6
4	GA5077842	Elbow, 90 degree, 2” flange x 2” flange, Banjo	2
5	FC200	Clamp, Worm screw, Use with 2” standard flange port, Banjo	6
6	GA5077835	Plumbing coupling, 2” flange x 1 1/2” male thread, Banjo	3
7	GA5078186	Valve, Ball, 3 Way, Bottom Load, 1 1/2” NPT Female	1
8	GA5078019	Reducing bush, 1 1/2” male thread x 1 1/4” female thread, Banjo	4
9	GA5077730	Hose barb, Elbow, 90 degree, 1 1/4” male thread x 1 1/4” hose	1
10	GA5077724	Hose barb, Straight, 1 1/4” male thread x 1 1/4” hose, Banjo	3
11	GA4514310	Dual product valve mount , suit H-frame	1
12	GA5078185	Valve, Ball, 1 1/2' female threaded inlet / outlet, Full port, Lever handle	2
13	GA5006689	Clamp Exhaust 2 5/8” (C12)	2
14	GA5003643	Washer 8mm Flat SS HD	4
15	GA5052590	Nut M8 Nyloc SS	4
16	GA5000577	Washer 12mm Flat SS HD	4
17	GA5012461	Nut M12 Nyloc ZP	2
18	GA5066895	Bolt M12 x 40 ZP GR8.8	2

Twin Solenoid Assembly

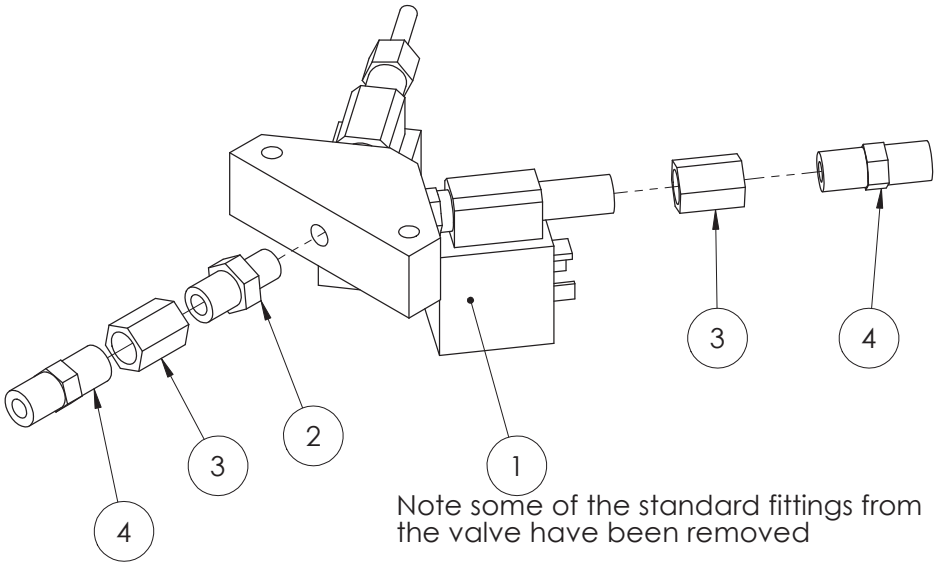

ITEM NO.	PART NUMBER	DESCRIPTION	QTY.
1	GA5061055	Ramsay twin solenoid valve assembly	1
2	GA5013809	Reducing Nipple 1/4" x 1/8"	1
3	GA5066940	Socket, 1/4" female thread, Hex, Brass	2
4	GA3500218	Hydraulic adaptor, Nipple, 1/4" BSP x 1/4" BSP	2

Chapter 8

INDUCTION HOPPER

60L Induction Hopper

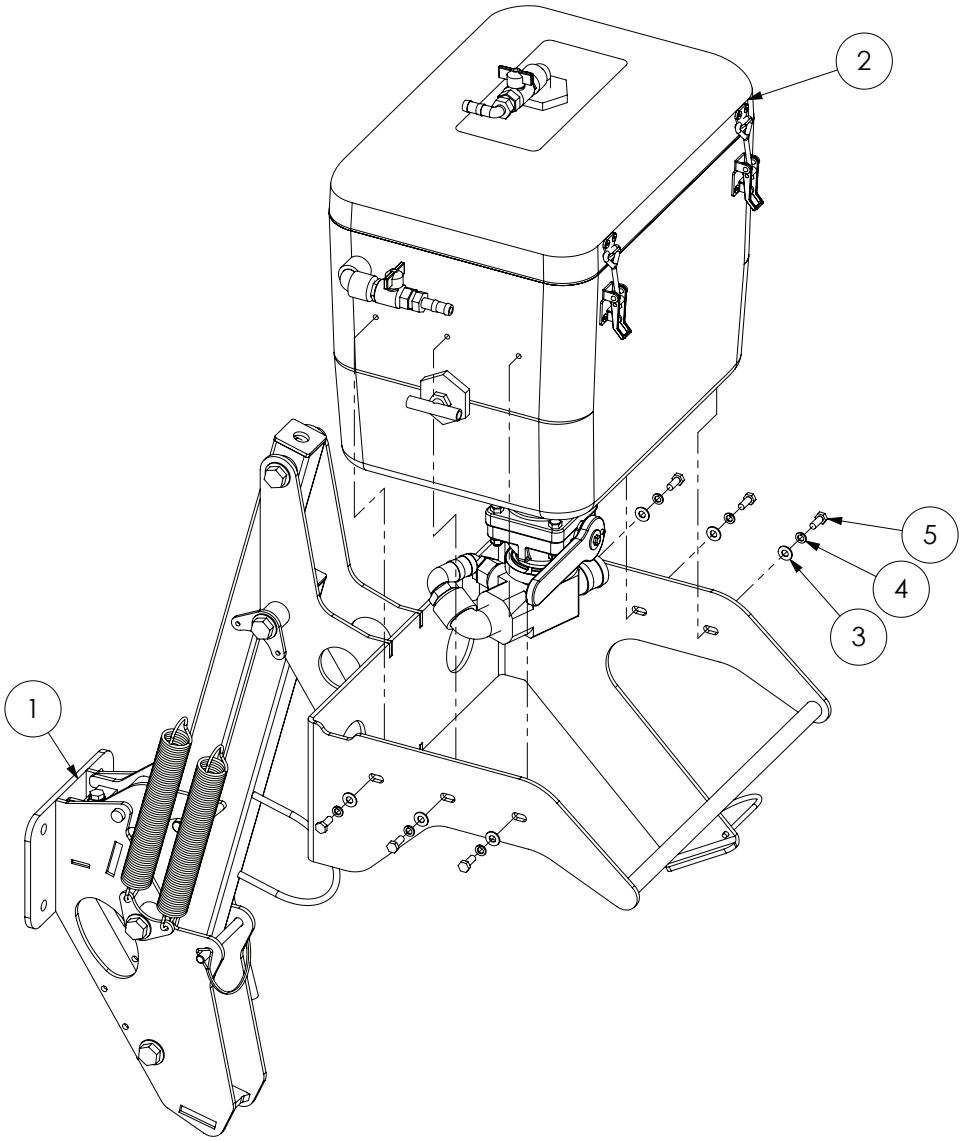

ITEM NO.	PART NUMBER	DESCRIPTION	QTY.
1	*	60L Induction Hopper Frame	1
2	*	60L Induction Hopper Tank Assembly	1
3	GA5003643	Washer 8mm HD	6
4	GA5004919	Washer 8mm Spring SS	6
5	GA5004085	Bolt M8 x 20 GR8.8 ZP	6

* Sub-assembly on following pages

60L Induction Hopper Frame

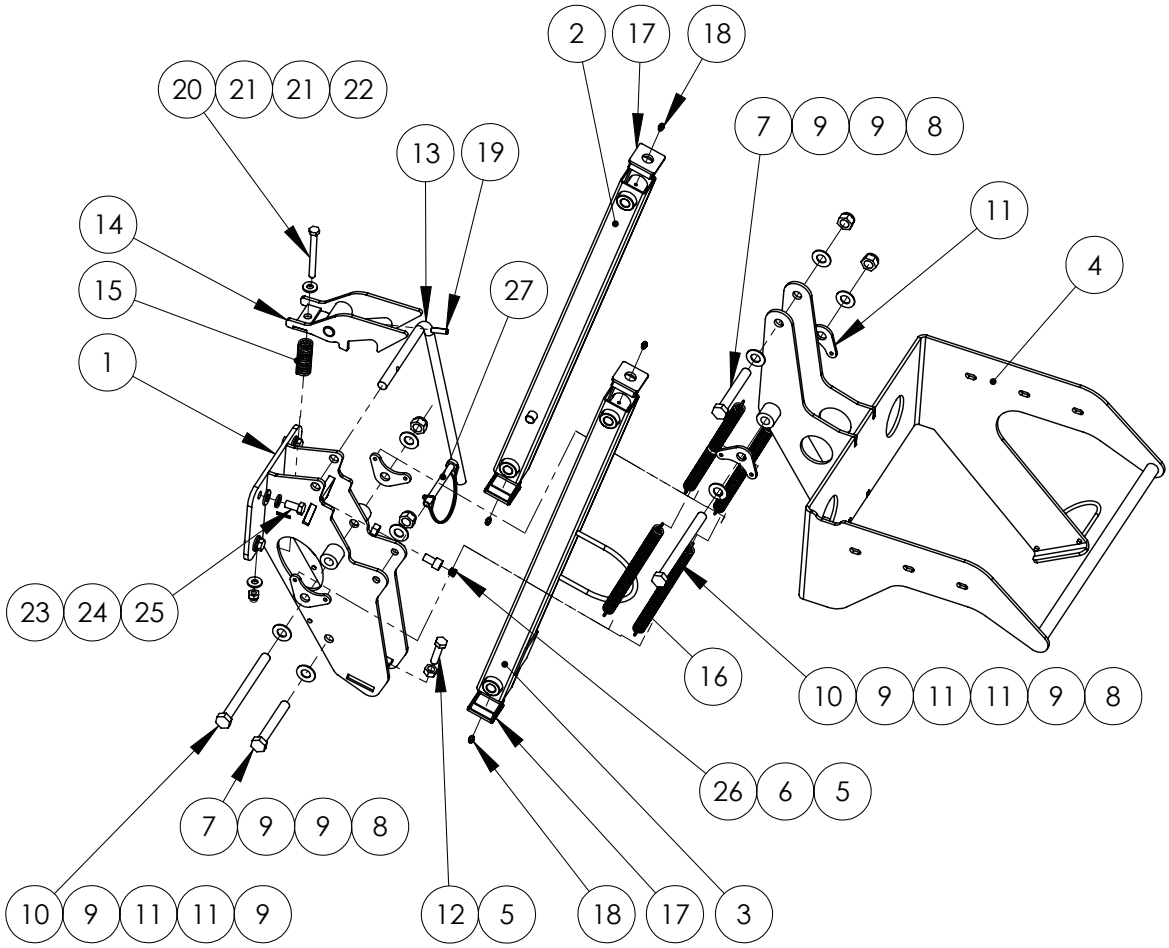

ITEM NO.	PART NUMBER	DESCRIPTION	QTY.
1	GA4653420	Induction Hopper Chassis Mount Advance	1
2	GA4653440	Induction Hopper Arm Upper Advance	1
3	GA4653445	Induction Hopper Arm Lower Advance	1
4	GA4656855	Induction Hopper tank support 60L suit EF range	1
5	GA5000559	Nut M12 Hex ZP	2
6	GA5050330	SHCS M12 x 20 ZP GR12.9	1
7	GA5000855	Bolt M16 x 110 GR8.8 ZP	2
8	GA5001029	Nut M16 Nyloc ZP	4
9	GA5001043	Washer 16mm Flat SS HD	8
10	GA5000879	Bolt M16 x 180 GR8.8 ZP	2
11	GA4522294	Mounting plate, Double induction hopper spring	4
12	GA5000327	Set Screw M12 x 45 GR8.8 ZP	1
13	GA4699435	Handle, Induction Hopper Latch Arm	1
14	GA4653490	Induction Hopper Latch Advance	1
15	GA5007329	Spring compression, 76.2mm x 25.4 x 3.15mm, gold	1
16	GA5007073	Spring, Tension, 38.2 OD x 284.3 long x 3.55mm	4
17	GA5003783	End cap, Insert, Black, Plastic, 50 x 50 mm	4

Continued over page

60L Induction Hopper Frame

ITEM NO.	PART NUMBER	DESCRIPTION	QTY.
18	GA5012203	Grease nipple, Short, 1/4" UNF	4
19	GA5075130	Roll pin M8 x 30mm coated	1
20	GA5006091	Bolt M10 x 100 GR8.8 ZP	1
21	GA5000117	Washer 10mm Flat SS Heavy Duty	2
22	GA5000141	Nut M10 Nyloc ZP	1
23	GA5000577	Washer 12mm Flat SS HD	4
24	GA5000575	Washer 12mm Spring SS	4
25	GA5011229	Bolt M12 x 25 GR8.8 ZP	4
26	GA5052905	Insert, suit 12mm Hole, Black, plastic	1
27	GA5048380	Pin, 11mm OD shaft, Spring Steel wire loop lock, Yellow zinc	1

60L Induction Hopper Tank

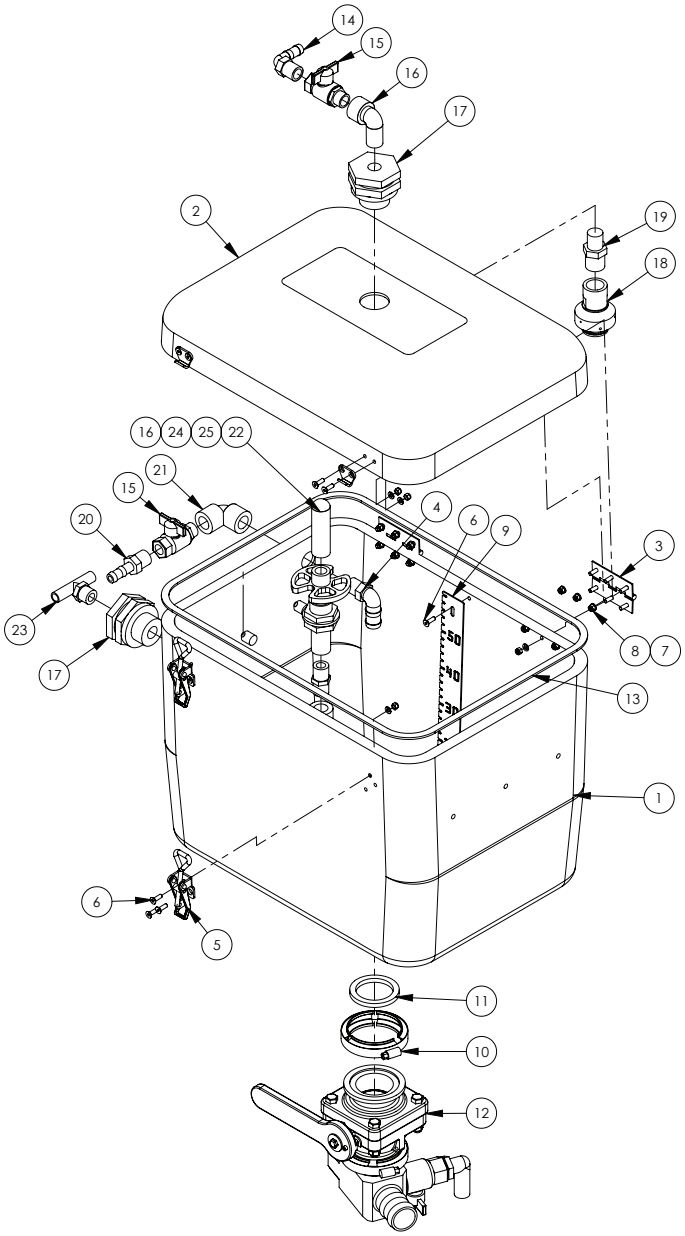

ITEM NO.	PART NUMBER	DESCRIPTION	QTY.
1	GA5071208	Tank, Induction Hopper, 60L with Flange to suit Banjo 220 Valve	1
2	GA5070045	Hopper lid - 07 Advance 65L	1
3	GA5006661	Hinge, Butt, 70 long x 50 wide x 1.5mm, SS	2
4	GA5077704	Hose barb, Elbow, 90 degree, 1/2” male thread x 3/4” hose	1
5	GA5007071	Latch, Adjustable, Induction Hopper Lid	2
6	GA5051230	CSCS M5 x 16 SS A2-70	23
7	GA5003983	Washer 5mm Flat SS	23
8	GA5003975	Nut M5 Nyloc SS	23
9	GA4522296	Level indicator, 60L induction hopper	1
10	FC220	2" Full Port Worm Screw Clamp	1
11	GA5076615	Seal, EPDM, Suit 2" flange fitting	1

Continued over page

60L Induction Hopper Tank

ITEM NO.	PART NUMBER	DESCRIPTION	QTY.
12	*	60L Induction Hopper - Valve Bottom	1
13	GA5016473	Tape PM foam 6.4 x 18mm L/Density	1
14	GA5077708	Hose barb, Elbow, 90 degree, 1/2” male thread x 1/2” hose	1
15	GA5020615	Valve, Ball, 12mm male, female thread inlet, outlet, Butterfly handle, SS	2
16	GA5078133	Street elbow, 90 degree, 1/2” female thread x 1/2” male thread	2
17	GA5078156	Tank flange, 1/2” female threads	2
18	GA5077336	Nozzle, Tank rinsing, 3/4” BSPT female inlet	1
19	GA5078087	Reducing nipple, 3/4” male thread x 1/2” male thread	1
20	GA5077702	Hose barb, Straight, 1/2” male thread x 1/2” hose	1
21	GA5077652	Street elbow, 90 degree, 1/2” female thread	1
22	GA5077063	Nozzle, Drum & container rinsing	1
23	GA3500391	Tee, Threaded, 1/2" male x 1/2" hose	1
24	GA5077911	Nipple, Short, 1/2” male thread x 1/2” male thread	1
25	GA5077062	Valve, Drum & container rinsing nozzle	1

* Sub-assembly on following pages

60L Induction Hopper - Valve Bottom

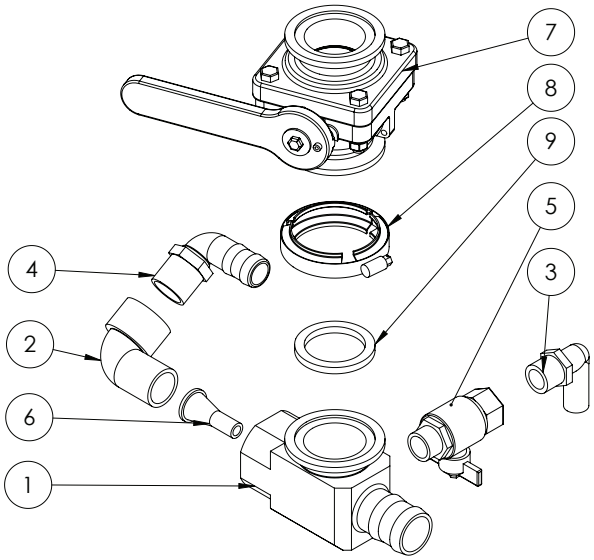

ITEM NO.	PART NUMBER	DESCRIPTION	QTY.
1	GA4552240	Hopper Bottom Venturi Housing with 2" Flange	1
2	GA5078137	Street elbow, 90 degree, 1” male x 1” female	1
3	GA5077717	Hose barb, Elbow, 90 degree, 3/4” male thread x 3/4” hose	1
4	GA5077723	Hose barb, Elbow, 90 degree, 1” male x 1” hose	1
5	GA5018315	Valve, Ball, 20mm male & female thread, Black Butterfly handle	1
6	L057A	Venturi, 9mm outlet, Suit induction hopper	1
7	GA5077908	Ball valve, 2" Full port , 4 Bolt Flanged, short	1
8	FC220	2" Full Port Worm Screw Clamp	1
9	GA5076615	Seal, EPDM, Suit 2" flange fitting	1

Chapter 9

FOAM MARKER

Foam Marker Tank 100L

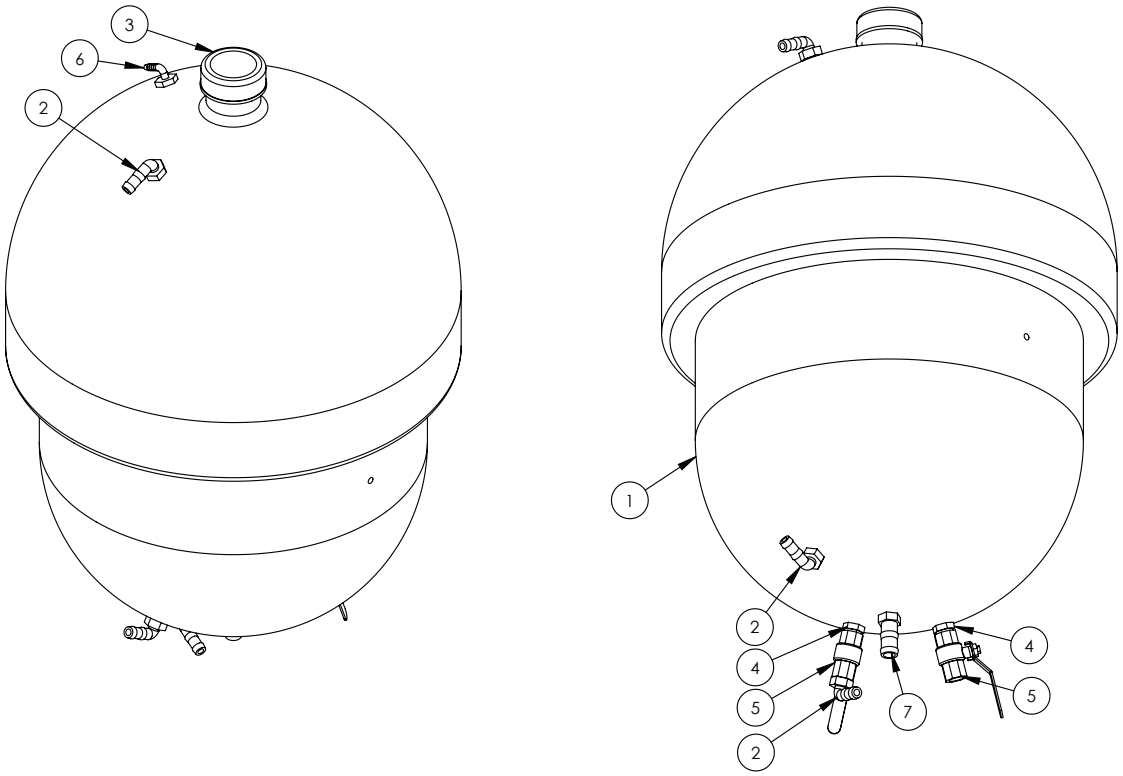

ITEM NO.	PART NUMBER	DESCRIPTION	QTY.
1	GA5018487	Tank, 100L, Exacta foam marker	1
2	GA5077708	Hose barb, Elbow, 90 degree, 1/2” male thread x 1/2” hose	3
3	GA5009157	Cap, Suit Exacta foam tank, O-ring not included	1
4	GA5048310	Nipple, 1/2” thread x 1/2” thread, Brass	2
5	GA5018309	Valve, Ball, 12mm female thread inlet / outlet, Lever handle, SS	2
6	GA5077656	Hose barb, Elbow, 90 degree, 1/2" male thread x 1/4" hose	1
7	GA5077707	Hose barb, 1/2” male thread x 3/4” hose, Banjo	1
-	GA5009187	O-ring, 60 x 5.5mm, suits Exacta tank cap	1

Note: See Chapter 4 ‘Right Hand Pod’ chapter foam marker compressor details.

Foam Concentrate Bottle

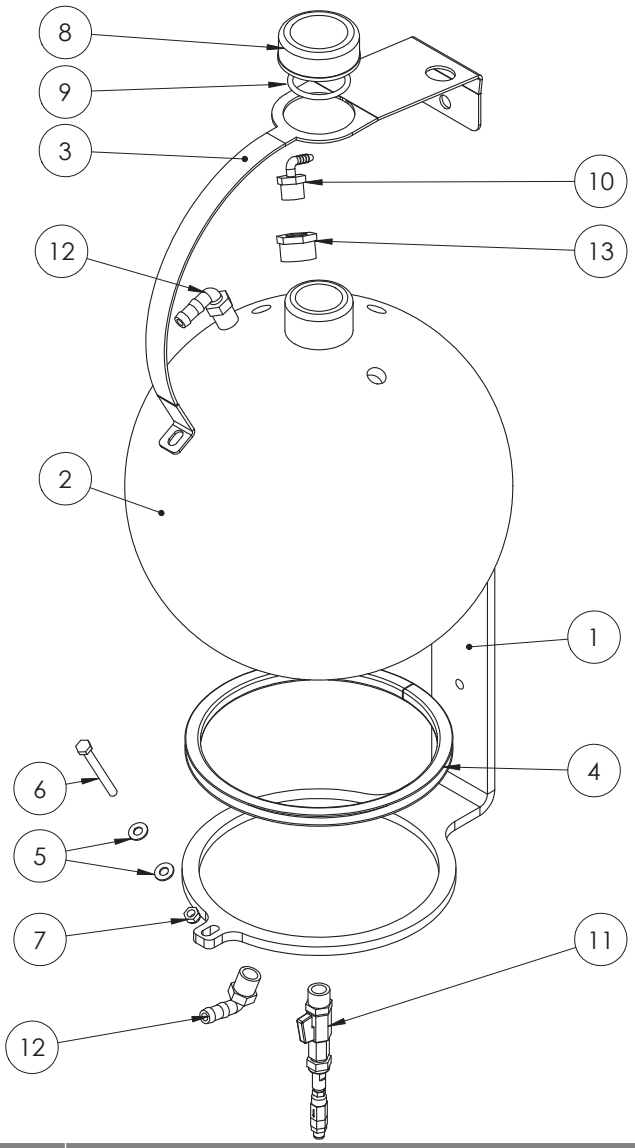

ITEM NO.	PART NUMBER	DESCRIPTION	QTY.
1	F70609A	Direct injection bottle mount plate 10mm FMS	1
2	GA4901038	Tank 25 litre round ball suit foam	1
3	F70622A	Direct inject bottle strap	1
4	GA5010085	Hollow section rectangular rubber	1
5	GA5003643	Washer 8mm Flat SS HD	2
6	GA5004749	Bolt M8 x 80 ZP GR8.8	1
7	GA5004917	Nut M8 Nyloc ZP	1
8	GA5075400	Cap, Suit Exacta foam tank, O-ring not included	1
9	GA5009187	O-ring, 60 x 5.5mm, suits Exacta tank cap	1
10	GA5077656	Hose barb, Elbow, 90 degree, 1/2" male thread x 1/4" hose	1
11	*	Filter & Ball Valve	1
12	GA5077708	Hose barb, Elbow, 90 degree, 1/2” male thread x 1/2” hose	2
13	GA5078013	Reducer bush, 1” male thread x 1/2” female thread	1

* Sub-assembly on following pages

Foam Generator

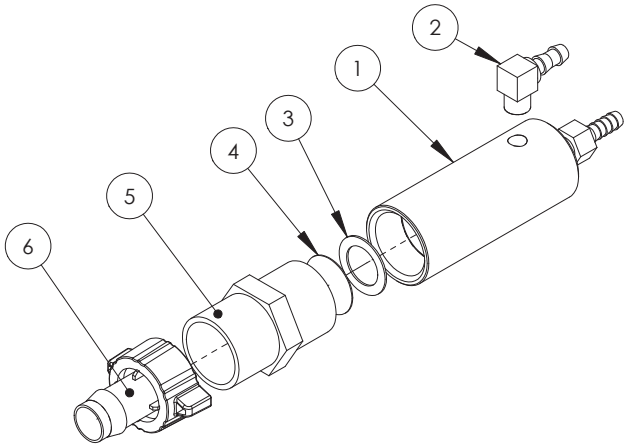

ITEM NO.	PART NUMBER	DESCRIPTION	QTY.
1	FGEN	Foam Generator nozzle sub assembly (3 parts nozzle & body & lock nut)	1
2	GA5066950	Barb elbow brass 1/4" x 1/8"	1
3	GA5002497	Washer, Flat, 3/4" x 1 1/8", Copper	1
4	GA4948390	Filter screen, circle, Suit foam generator, SS, 200 mesh	1
5	GA5077914	Nipple, Short, 1" male thread x 1" male thread	1
6	GA5007621	Hose barb, Straight, 1" BSP female thread with grip tabs x 19mm hose tail	1

Foam Generator Mounting

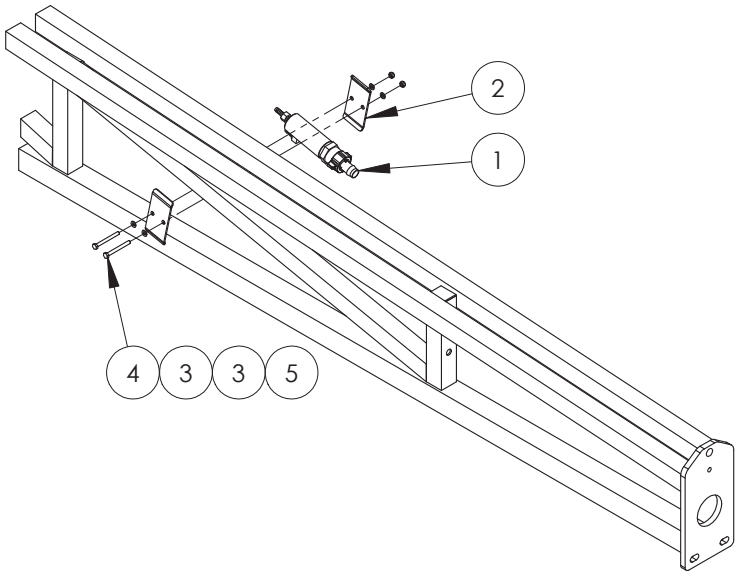

ITEM NO.	PART NUMBER	DESCRIPTION	QTY.
1	FGEN-COM	Foam marker, Foam generator assembly	1
2	F70239A	Bracket, Foam generator clamp	2
3	GA5004437	Washer 6mm Flat SS	4
4	GA5004097	Bolt M6 x 60 ZP GR8.8	2
5	GA5048115	Nut M6 Nyloc ZP	2

Foam Accumulator Assembly

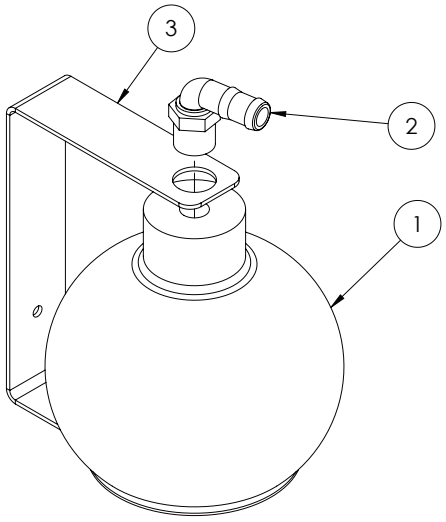

ITEM NO.	PART NUMBER	DESCRIPTION	QTY.
1	GA5008491	Accumulator, Foam marker, Exacta, Green	1
2	GA5077717	Hose barb, Elbow, 90 degree, 3/4" male thread x 3/4" hose	1
3	F70841A	Bracket, Foam accumulator mounting, Suit 50 x 50 RHS	1

Filter & Ball Valve

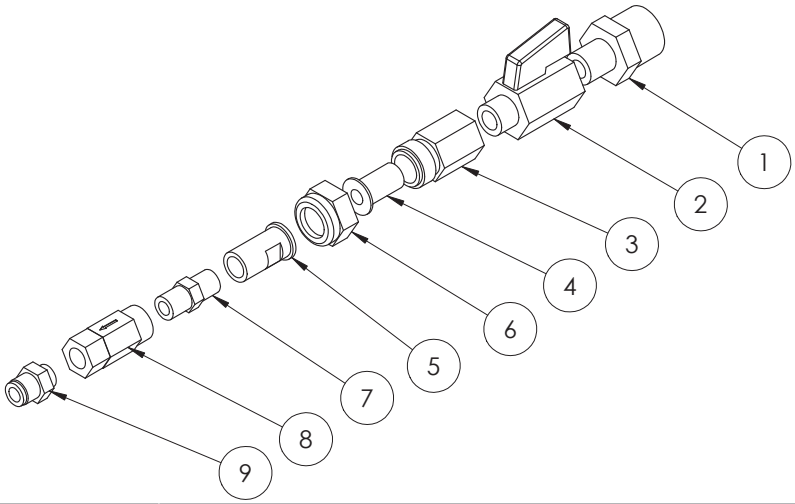

ITEM NO.	PART NUMBER	DESCRIPTION	QTY.
1	GA5012259	Reducing nipple, 1/2" male thread x 1/4" male thread, Brass	1
2	GA5018323	Valve, Ball, 1/4" male / female thread inlet / outlet, SS, Lever handle	1
3	GA5077369	Nozzle body, Single, 1/4" male NPT inlet, Brass	1
4	GA5077157	Filter screen, Nozzle tip, Orange 200 mesh, Polypropylene & SS	1
5	GA5077543	Adapter, Brass	1
6	GA5077372	Nozzle cap, Brass	1
7	GA5066935	Nipple brass 1/8" x 1/8"	1
8	GA5018147	Check valve inline 1/8" NPT Female	1
9	GA5050210	Pneumatic fitting, Nipple, 1/8" BSPP male x 6mm push type	1

Foam Marker Filter

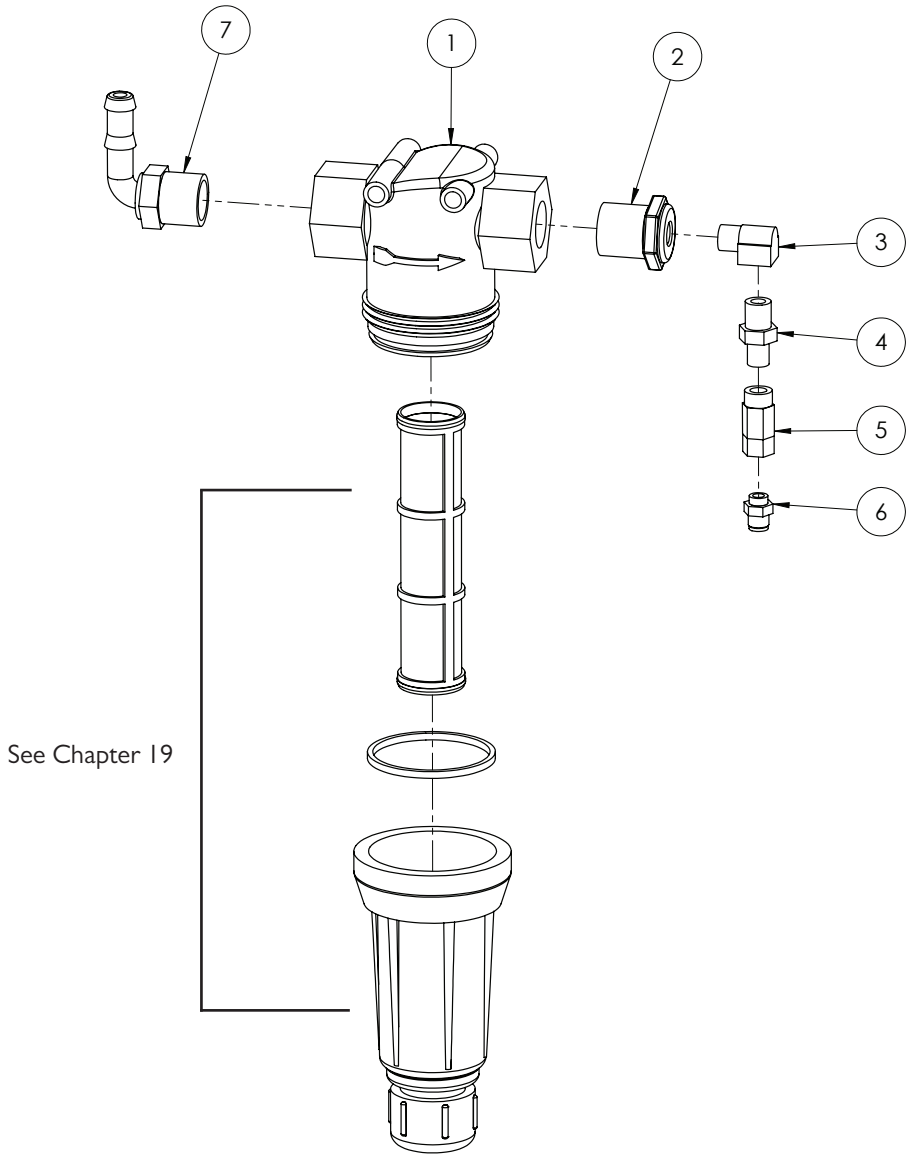

ITEM NO.	PART NUMBER	DESCRIPTION	QTY.
1	GA5077270	Filter, 3/4” female thread inlet / outlet, Orange 200 mesh screen	1
2	GA5078008	Reducing bush, 3/4” male thread x 1/4” female thread	1
3	GA5048305	Elbow, 90 degree, 1/4" BSP male x 1/4" BSP female, Brass	1
4	GA5013809	Reducing Nipple 1/4” x 1/8”	1
5	GA5018147	Check valve inline 1/8” NPT Female	1
6	GA5050210	Pneumatic fitting, Nipple, 1/8” BSPP male x 6mm push type	1
7	GA5077710	Hose barb, Elbow, 90 degree, 3/4” male thread x 1/2” hose	1

Chapter 10

TRANSCAL

Transcal Assembly

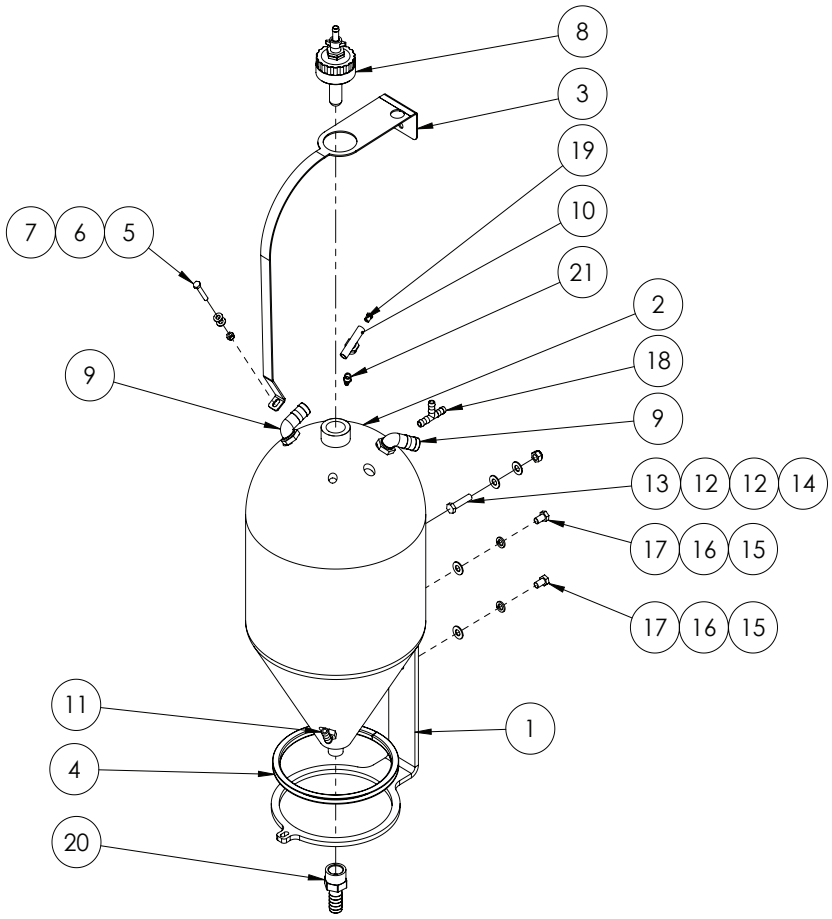

ITEM NO.	PART NUMBER	DESCRIPTION	QTY.
1	F70608A	45l Transcal mount plate 10mm FMS	1
2	GA4901047	Tank, 45L, Natural, Suit Transcal	1
3	F70623A	Transcal bottle strap Yellow Zinc Plated	1
4	GA5010085	Hollow section rectangular rubber (cut 735mm)	1
5	GA5011489	Bolt M8 x 60 ZP GR8.8	1
6	GA5003643	Washer 8mm Flat SS HD	2
7	GA5004917	Nut M8 Nyloc ZP	1
8	*	Rinse Nozzle Cap	1
9	GA5077723	Hose barb, Elbow, 90 degree, 1” male x 1” hose	2
10	GA3500391	Tee, Threaded, 1/2" male x 1/2" hose	1
11	GA5077708	Hose barb, Elbow, 90 degree, 1/2” male thread x 1/2” hose	1

* Sub-assembly on following pages

Continued over page

Transcal Assembly

ITEM NO.	PART NUMBER	DESCRIPTION	QTY.
12	GA5000577	Washer 12mm Flat SS HD	2
13	GA5011237	Set Screw M12 x 50 ZP GR8.8	1
14	GA5012461	Nut M12 Nyloc ZP	1
15	GA5000117	Washer 10mm Flat SS HD	2
16	GA5000137	Washer 10mm Spring SS	2
17	GA5011229	Bolt M12 x 25 ZP GR8.8	2
18	GA5077751	Tee, Hose barb, 1/2", Banjo	1
19	GA5020695	Hosetail (brass) 1/4" x 1/8" Male Thread	1
20	GA5077747	Hose barb, Straight, 1" female thread x 1" hose	1
21	GA5020540	Hose barb, Straight, 1/4 male thread x 1/4 hose, Brass	1

Rinse Nozzle Cap Assembly

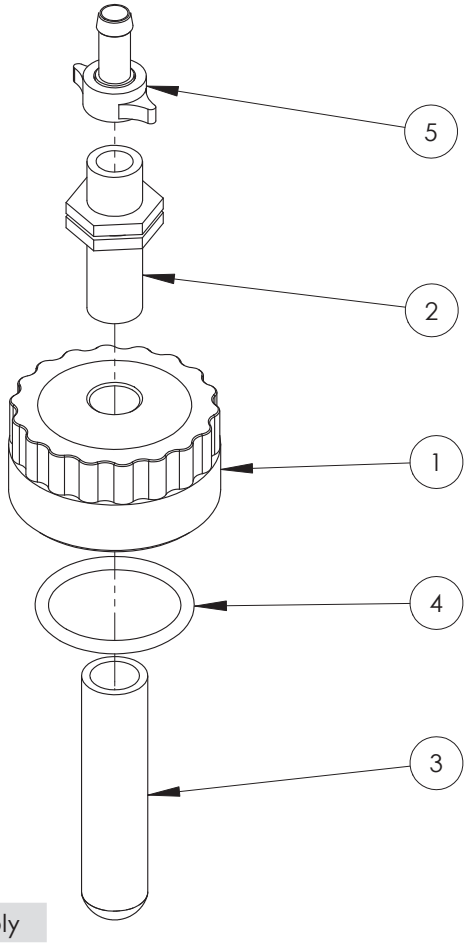

GA4903050 Complete Assembly

ITEM NO.	PART NUMBER	DESCRIPTION	QTY.
1	L055A	Cap / Lid, 80 OD, 1/2" BSPP female thread in top, Suit Transcal	1
2	GA5078408	Long thread nipple 1/2"	1
3	GA5077063	Nozzle, Drum & container rinsing	1
4	GA5009187	O-ring, 60 x 5.5mm, suits Exacta tank cap	1
5	GA5075655	Hose barb, Brass, 13mm hose x fly nut end	1

Chapter 11

MAIN TANK

Tank Assembly - 4000-5000L

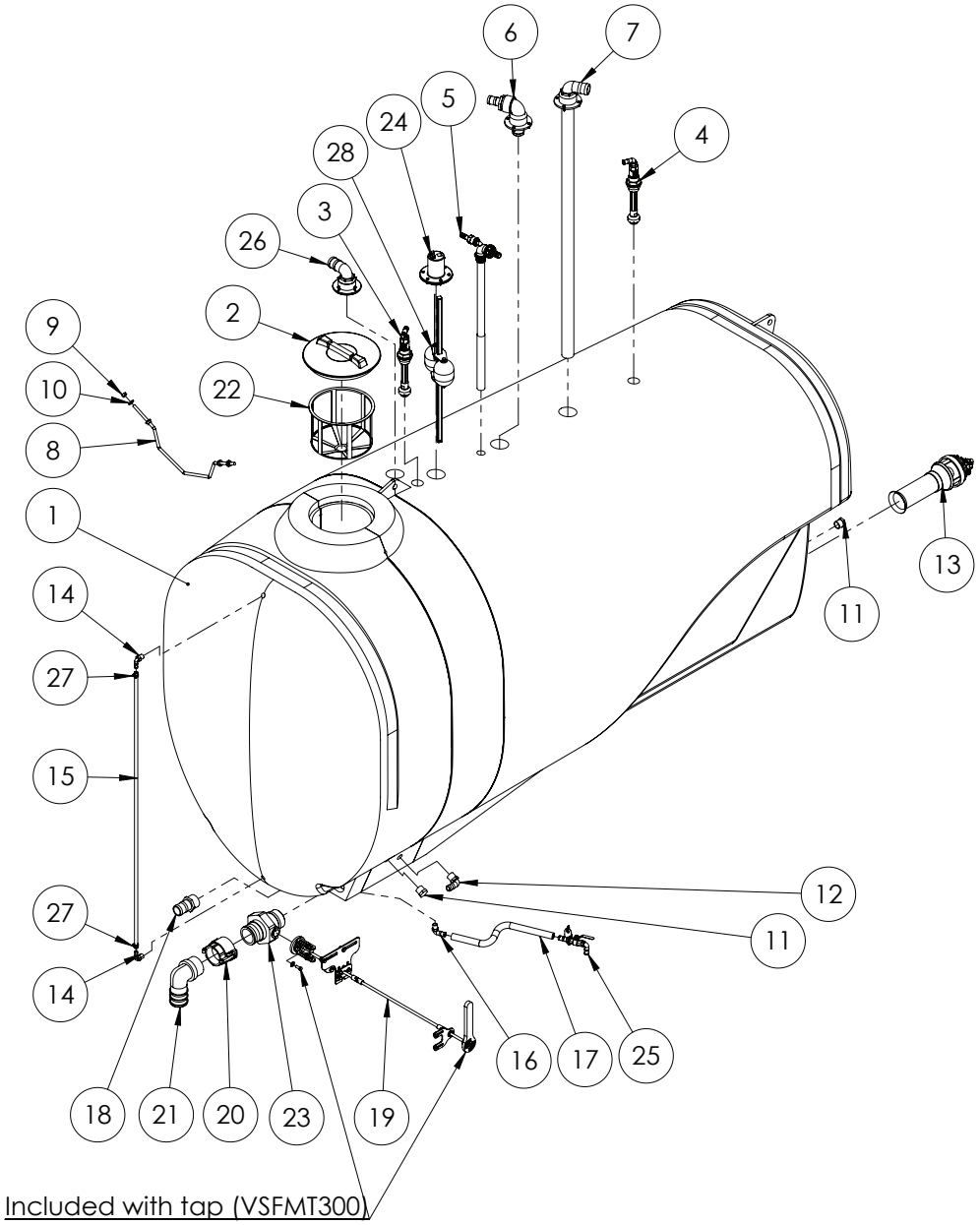

Continued over page

Tank Assembly - 4000-5000L

ITEM NO.	PART NUMBER	DESCRIPTION	QTY.
1	GA5070030	Tank, 5000L, Prairie Advance EF, Bare	1
	GA5070200	Tank, 4000L, Prairie Advance EF, Bare	
2	GA5076877	Lid, Black Plastic, Diameter 355, With breather	1
	GA5076880	Lid, Black, Without breather, Medium, Diameter 355	
3	*	Tank Rinsing Nozzle - Tee Assembly	1
4	*	Tank Rinsing Nozzle - Elbow Assembly	1
5	*	Venturi Filler Assembly	1
6	*	Hopper Tank Inlet	1
7	*	Tank Fill - 2”	1
8	GA4672885	Bar, Tank lid opening support, Suit EF tanks	1
9	GA5000581	Nut M12 Hex SS	4
10	GA5000577	Washer 12mm Flat SS HD	4
11	GA5077945	Plug, 1” male thread, Banjo	2
12	GA5077723	Hose barb, Elbow, 90 degree, 1” male x 1” hose, Banjo	1
13	*	Supermix Agitator Assembly	1
14	GA5077708	Hose barb, Elbow, 90 degree, 1/2” male thread x 1/2” hose	2
15	GA2000209	Hose, Clear, 12mm, Sight tube	1
16	GA5077704	Hose barb, Elbow, 90 degree, 1/2” male thread x 3/4” hose	1
17	GA2000216	Hose, Pressure, 20mm, Black 250psi	1
18	GA5077737	Hose barb, Straight, 2” male thread x 2” hose, Banjo	1
19	*	Remote Drain - 4000-6500L	1
20	GA5076720	Cam lever, 3” female coupling x 3” female thread - NSPT thread	1
21	GA5077742	Hose barb, Elbow, 90 degree, 3” male thread x 3” hose	1
22	GA5076714	Filter, Basket type, Diameter 305 x 245 deep	1
23	GA5078204	3" NPT Male x 3" Male adaptor Long Handle	1
24	*	Dry sight tube - Locating Cap Assembly	1
25	*	Sump Drain Valve	1
26	*	Outlet - Tank Overflow 2”	1
27	GA5000469	Hose clamp, 1/2”, SS, 12-20/9W3	2
28	*	Dry sight tube - Float Assembly	1

* Sub-assembly on following pages

SPARE PARTS	
PART NUMBER	DESCRIPTION
GA5076876	Breather, Diameter 140, Suit Diameter 355 tank lid, ARAG

Tank Assembly - 6500L

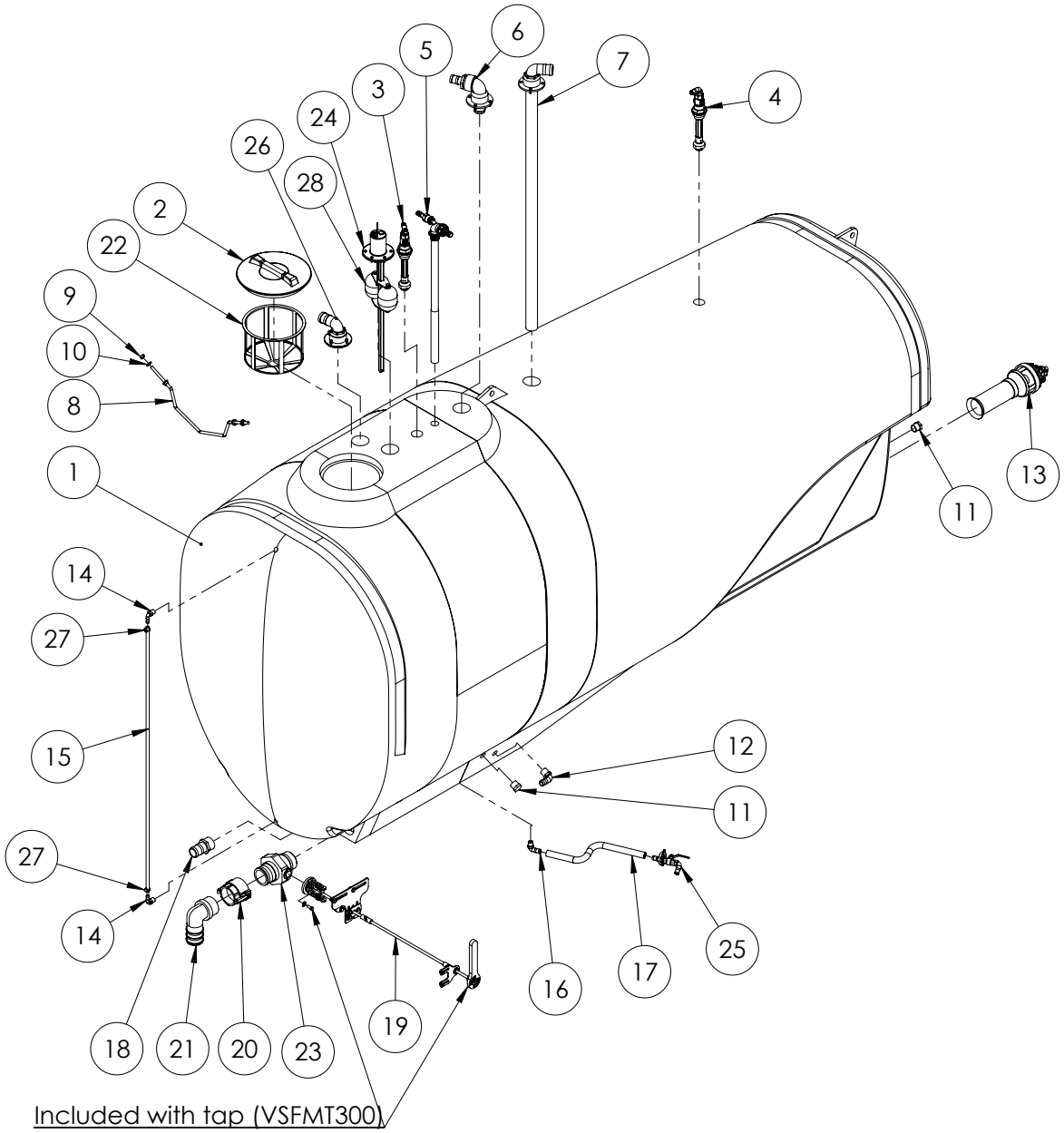

Included with tap (VSFMT300)

Continued over page

Tank Assembly - 6500L

ITEM NO.	PART NUMBER	DESCRIPTION	QTY.
1	GA5070100	Tank, 6500L, Prairie Advance EF, Bare	1
2	GA5076877	Lid, Black Plastic, Diameter 355, With breather	1
	GA5076880	Lid, Black, Without breather, Medium, Diameter 355	
3	*	Tank Rinsing Nozzle - Tee Assembly	1
4	*	Tank Rinsing Nozzle - Elbow Assembly	1
5	*	Venturi Filler Assembly	1
6	*	Hopper Tank Inlet	1
7	*	Tank Fill - 2”	1
8	GA4672885	Bar, Tank lid opening support	1
9	GA5000581	Nut M12 Hex SS	4
10	GA5000577	Washer 12mm Flat SS HD	4
11	GA5077945	Plug, 1” male thread, Banjo	2
12	GA5077723	Hose barb, Elbow, 90 degree, 1” male x 1” hose, Banjo	1
13	*	Supermix Agitator Assembly	1
14	GA5077708	Hose barb, Elbow, 90 degree, 1/2” male thread x 1/2” hose	2
15	GA2000209	Hose, Clear, 12mm, Sight tube	1
16	GA5077704	Hose barb, Elbow, 90 degree, 1/2” male thread x 3/4” hose	1
17	GA2000216	Hose, Pressure, 20mm, Black 250psi	1
18	GA5077737	Hose barb, Straight, 2” male thread x 2” hose	1
19	*	Remote Drain - 4000-6500L	1
20	GA5076720	Cam lever, 3” female coupling x 3” female thread - NSPT thread	1
21	GA5077742	Hose barb, Elbow, 90 degree, 3” male thread x 3” hose	1
22	GA5076714	Filter, Basket type, Diameter 305 x 245 deep	1
23	GA5078204	3" NPT Male x 3" Male Adaptor Long Handle	1
24	*	Dry sight tube - Locating Cap Assembly	1
25	*	Sump Drain Valve	1
26	*	Outlet - Tank Overflow 2”	1
27	GA5000469	Hose clamp, 1/2”, SS, 12-20/9W3	2
28	*	Dry sight tube - Float Assembly	1

* Sub-assembly on following pages

SPARE PARTS	
PART NUMBER	DESCRIPTION
GA5076876	Breather, Diameter 140, Suit Diameter 355 tank lid, ARAG

Tank Assembly - 7500/8500L

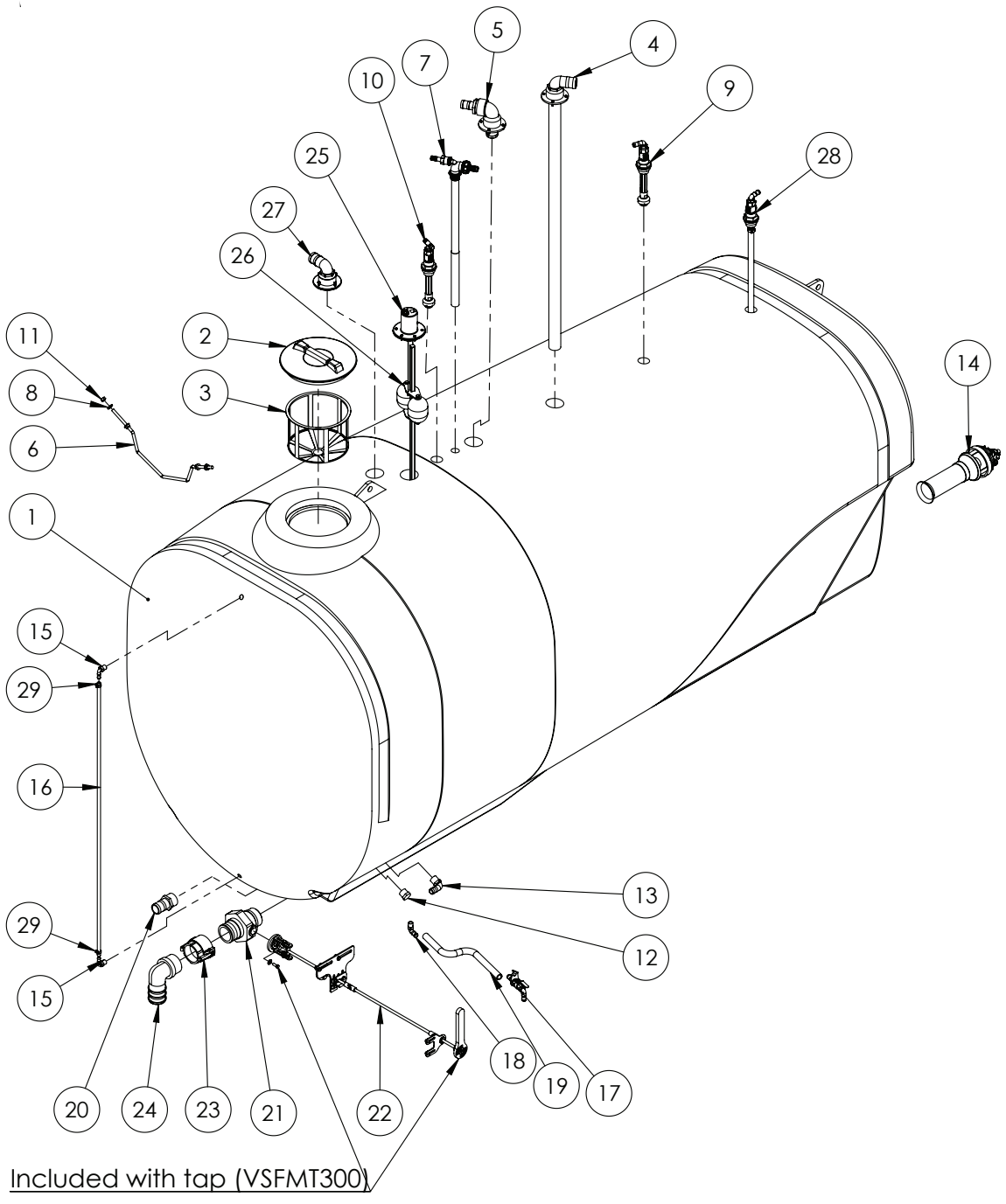

Included with tap (VSFMT300)

Continued over page

Tank Assembly - 7500/8500L

ITEM NO.	PART NUMBER	DESCRIPTION	QTY.
1	GA5070280	Tank, 7500L, EF with wheel cut outs, Bare	1
	GA5070285	Tank, 8500L, EF with wheel cut outs, Bare	
2	GA5076877	Lid, Black Plastic, Diameter 355, With breather	1
	GA5076880	Lid, Black, Without breather, Medium, Diameter 355	
3	GA5076714	Filter, Basket type, Diameter 305 x 245 deep	1
4	*	Tank Fill - 2”	1
5	*	Hopper Tank Inlet	1
6	GA4672885	Bar, Tank lid opening support, Suit EF tanks	1
7	*	Venturi Filler Assembly	1
8	GA5000577	Washer 12mm Flat SS HD	4
9	*	Tank Rinsing Nozzle - Elbow Assembly	1
10	*	Tank Rinsing Nozzle - Tee Assembly	1
11	GA5000581	Nut M12 Hex SS	4
12	GA5077945	Plug, 1” male thread, Banjo	1
13	GA5077723	Hose barb, Elbow, 90 degree, 1” male x 1” hose	1
14	*	Supermix Agitator Assembly	2
15	GA5077708	Hose barb, Elbow, 90 degree, 1/2” male thread x 1/2” hose	2
16	GA2000209	Hose, Clear, 12mm, Sight tube	1
17	*	Sump Drain Valve	1
18	GA5077704	Hose barb, Elbow, 90 degree, 1/2” male thread x 3/4” hose	1
19	GA2000216	Hose, Pressure, 20mm, Black 250psi	1
20	GA5077737	Hose barb, Straight, 2” male thread x 2” hose	1
21	GA5078204	3" NPT Male x 3" Male Adaptor Long Handle	1
22	*	Remote Drain - 7500/8500L	1
23	GA5076720	Cam lever, 3” female coupling x 3” female thread - NSPT thread	1
24	GA5077742	Hose barb, Elbow, 90 degree, 3” male thread x 3” hose	1
25	*	Dry sight tube - Locating Cap Assembly	1
26	*	Dry sight tube - Float Assembly	1
27	*	Outlet - Tank Overflow 2”	1
28	*	Inlet - Boom Recirculation (Rapidflow only)	1
29	GA5000469	Hose clamp, 1/2”, SS, 12-20/9W3	2

* Sub-assembly on following pages

Tank Rinsing Nozzle - Tee Assembly

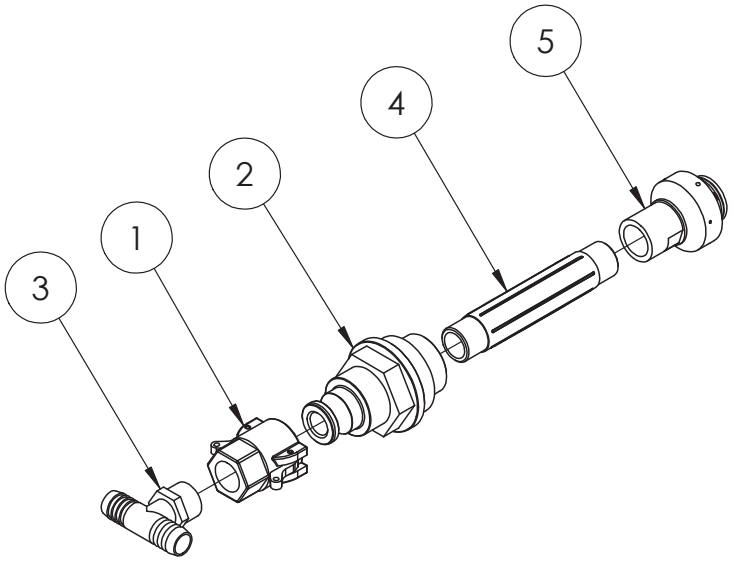

ITEM NO.	PART NUMBER	DESCRIPTION	QTY.
1	GA5077132	Cam lever, 3/4” female coupling x 3/4” female thread	1
2	GA4572015	Tank rinse adaptor with cam lock	1
3	GA3500431	Hose barb, Tee, 3/4” hose barb x 3/4” hose barb x 3/4” male thread	1
4	GA5077912	Nipple, 6” long, 3/4” male thread	1
5	GA5077336	Nozzle, Tank rinsing, 3/4” BSPT female inlet	1

Tank Rinsing Nozzle - Elbow Assembly

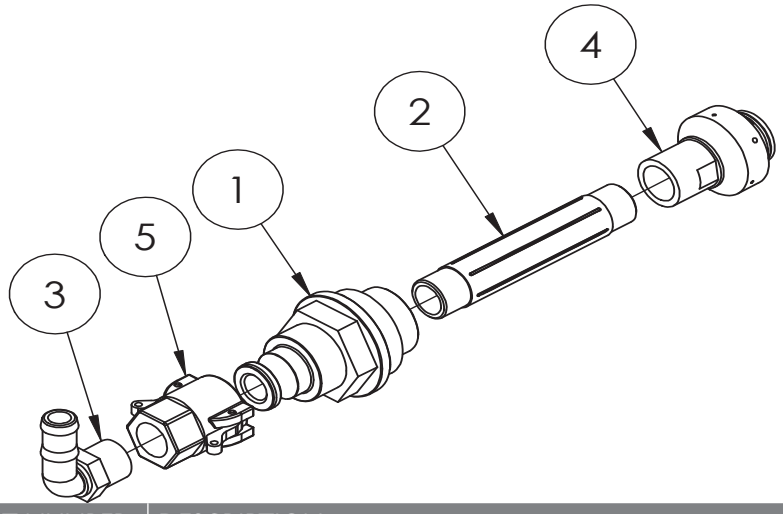

ITEM NO.	PART NUMBER	DESCRIPTION	QTY.
1	GA4572015	Tank rinse adaptor with cam lock	1
2	GA5077912	Nipple, 6” long, 3/4” male thread	1
3	GA5077717	Hose barb, Elbow, 90 degree, 3/4” male thread x 3/4” hose	1
4	GA5077336	Nozzle, Tank rinsing, 3/4” BSPT female inlet	1
5	GA5077132	Cam lever, 3/4” female coupling x 3/4” female thread	1

Outlet - Tank Overflow 2”

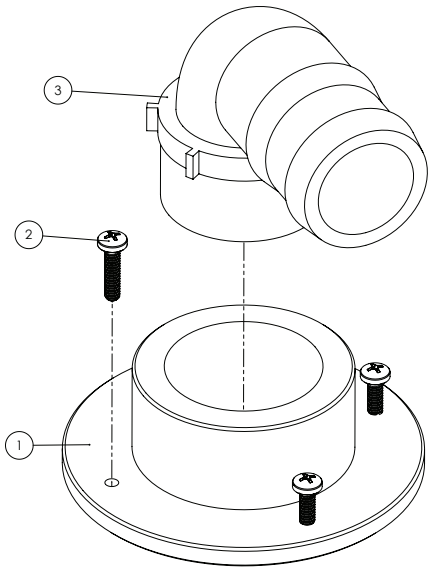

ITEM NO.	PART NUMBER	DESCRIPTION	QTY.
1	GA4583370	Threaded Tank Flange 2"	1
2	GA5000527	Screw 12G x 1 XR STS Pan SS	4
3	GA5077740	Hose Barb Elbow 2"	1

Inlet - Boom Recirculation (RapidFlow only)

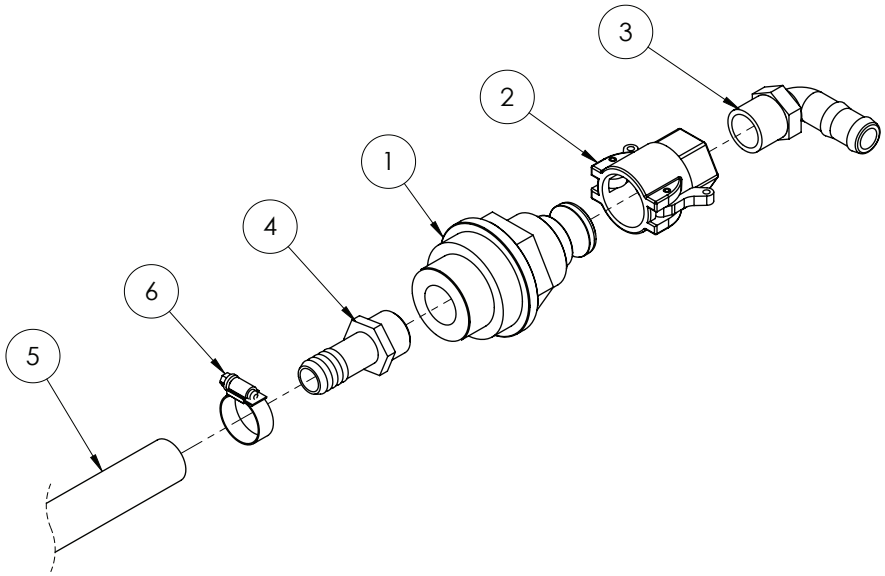

ITEM NO.	PART NUMBER	DESCRIPTION	QTY.
1	GA4572015	Tank rinse adaptor with cam lock	1
2	GA5077132	Cam lever, 3/4” female coupling x 3/4” hose barb, Banjo	1
3	GA5077717	Hose barb, Elbow, 90 degree, 3/4” male thread x 3/4” hose, Banjo	1
4	GA5077709	Hose barb, Straight, 3/4” male thread x 3/4” hose, Banjo	1
5	GA2000216	Hose, Pressure, 20mm, Black 250psi (cut 1300 mm)	1
6	GA5000999	Hose Clamp, 3/4”, SS (16-27/12W)	1

Inlet - Hopper Fill 2”- Straight

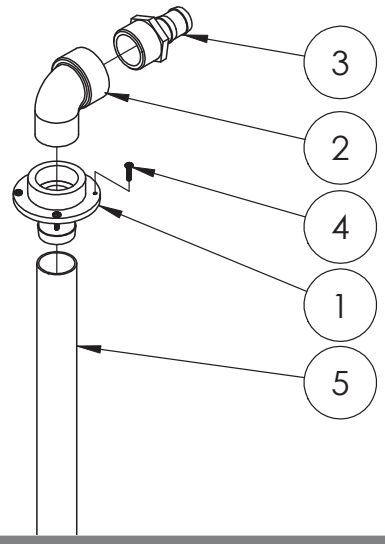

ITEM NO.	PART NUMBER	DESCRIPTION	QTY.
1	L026A	Barb to suit tank fill top	1
2	GA5078142	Street elbow, 90 degree, 2” male thread x 2” female thread, Banjo	1
3	GA5077739	Hose barb, Straight, 2” male thread x 1 1/2” hose	1
4	GA5000527	Screw, Pan head, 12G x 25mm, SS	4
5	GA2000228	Hose, PVC, 50mm, Black (cut 1550mm)	1
-	GA5003325	Hose clamp, 2” SS, (40-60/12W)	2

Inlet - Tank Fill 2” - Straight

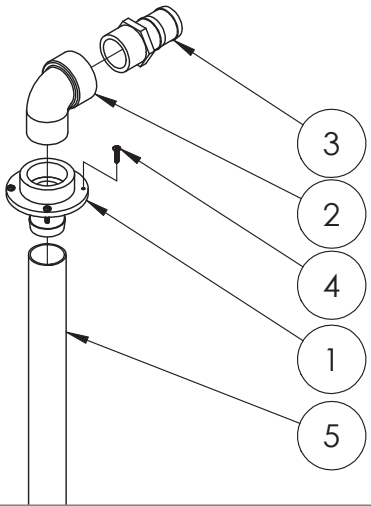

ITEM NO.	PART NUMBER	DESCRIPTION	QTY.
1	L026A	Barb to suit tank fill top	1
2	GA5078142	Street elbow, 90 degree, 2” male thread x 2” female thread, Banjo	1
3	GA5077737	Hose barb, Straight, 2” male thread x 2” hose	1
4	GA5000527	Screw, Pan head, 12G x 25mm, SS	4
5	GA2000228	Hose, PVC, 50mm, Black (cut 1550mm)	1
-	GA5003325	Hose clamp, 2” SS, (40-60/12W)	2

Inlet - Tank Fill 3” - Optional

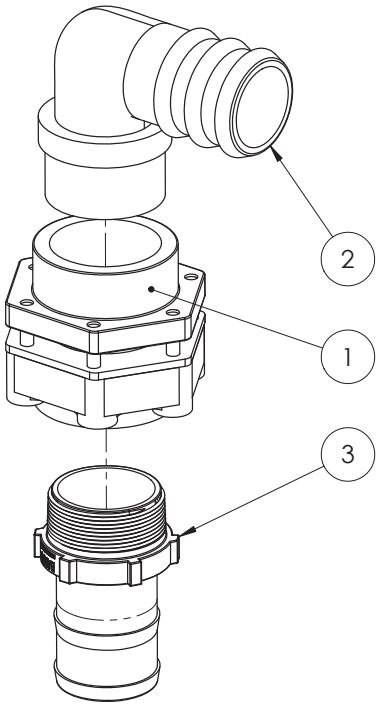

ITEM NO.	PART NUMBER	DESCRIPTION	QTY.
-	GA2000231	Hose, Suction, PVC, 75mm, Black (Cut to 2000 mm)	1
1	GA5077343	Bolted Flange, 3”, Tank Fill	1
2	GA5077742	Hose barb, Elbow, 90 degree, 3” male thread x 3” hose	1
3	GA5077741	Hose barb, Straight, 3” male thread x 3” hose	1

Supermix Agitator

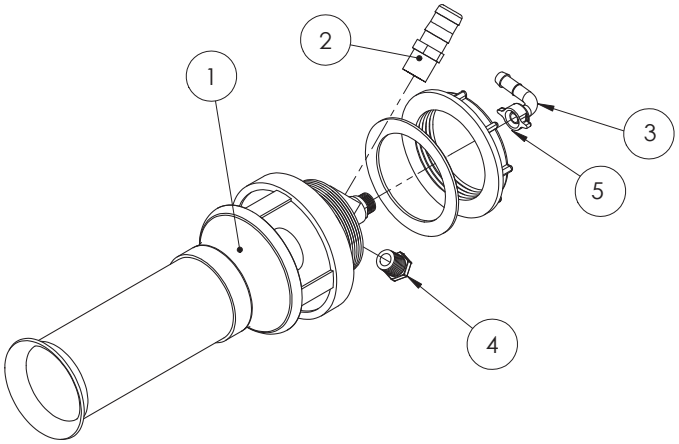

ITEM NO.	PART NUMBER	DESCRIPTION	QTY.
1	GA5077038	Agitator, Super mix, 3mm jet, Arag	1
2	GA5077715	Hose barb, Straight, 3/4” male thread x 1” hose barb, Banjo	1
3	GA5075657	Hose barb, Elbow, 90 degree, 13mm hose, including 1/2” fly nut and seal, Brass, Arag	1
4	GA5077943	Plug, 1/2” male thread, Banjo	1
5	GA5075653	Seal, Rubber, 11.8 ID x 18 OD x 2mm	1

Venturi Filler

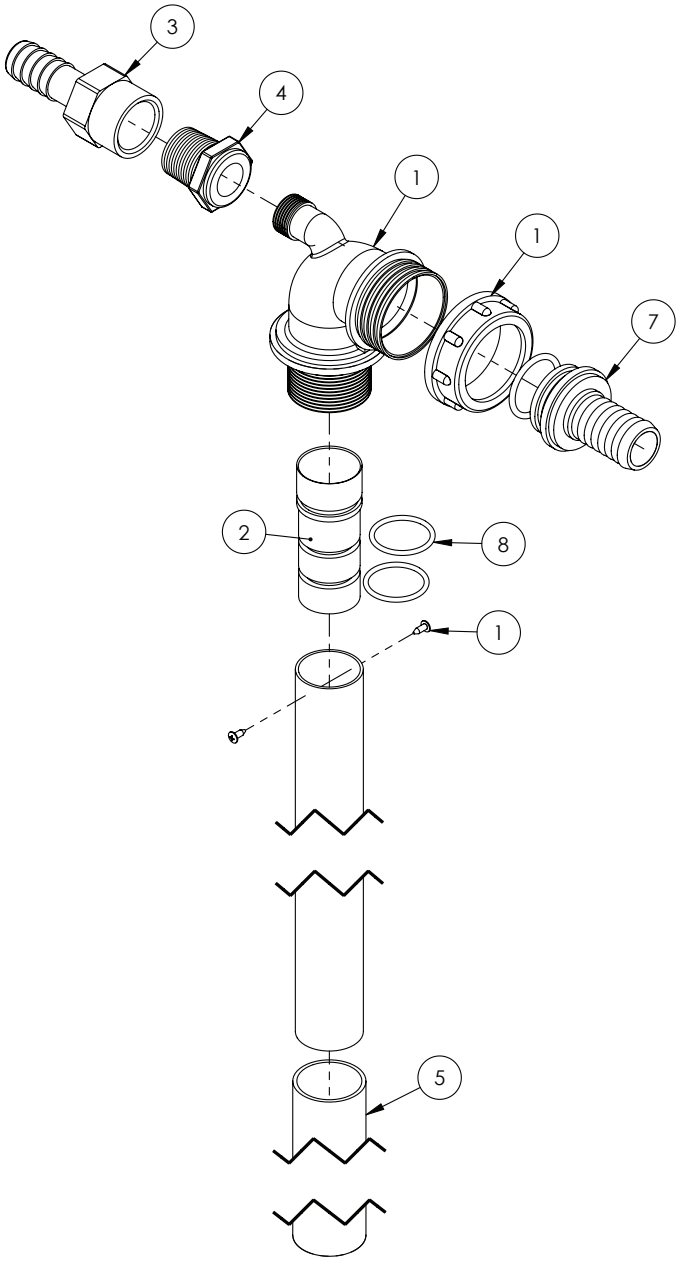

ITEM NO.	PART NUMBER	DESCRIPTION	QTY.
-	GA5007235	Hose clamp, Cobra type, 1 1/2”	1
1	GA5077035	Venturi, Top of tank, 32mm OD outlet	1
2	MACH0022	Jet for Arag venturi	1
3	GA5077743	Hose barb female 3/4"	1
4	GA5078010	Poly Pipe Reducer Bush 3/4” x 1/2”	1
5	GA5050205	Hose Lay flat Blue, 32mm, cut 405mm long	1
6	GA5077679	O-ring 30 x 3mm	1
7	GA5076036	Hose barb, Straight, 1 1/2” fly nut end x 1” hose barb	1
8	GA5049125	O-ring, 23.4 x 3.53mm, BS213	2

Note: Not all parts supplied with kit 500232 are used in this assembly.

Dry Sight Tube - Locating Cap Assembly

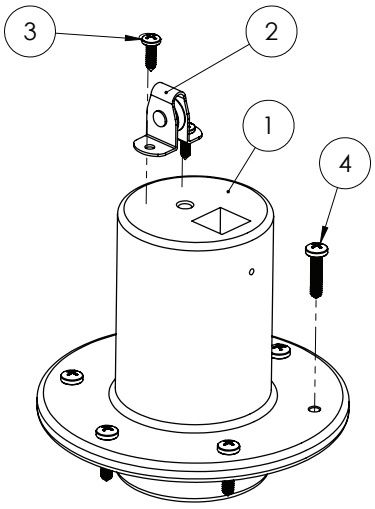

ITEM NO.	PART NUMBER	DESCRIPTION	QTY.
1	MACH0308	Float tube locating cap (Blk Poly)	1
2	GA5015221	Pulley, Upright, 19mm, Suit sight tube cable roller	1
3	GA5014817	Screw 10G x 5/8" Pan Head SS	2
4	GA5000527	Screw, Pan head, 12G x 25mm, SS	6

Dry Sight Tube - Float & Guide

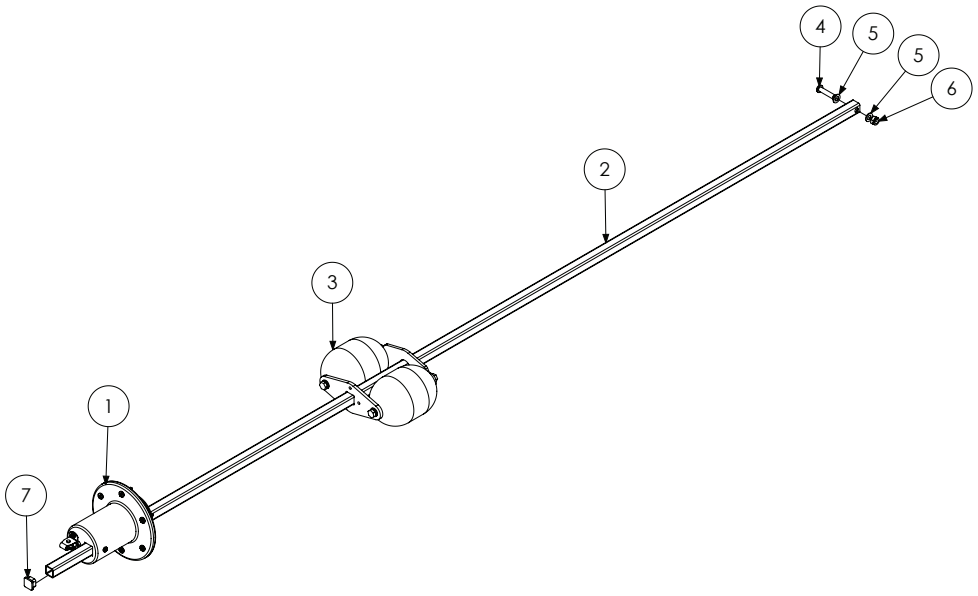

ITEM NO.	PART NUMBER	DESCRIPTION	QTY.
1	*	Dry Sight Tube - Locating Cap Assembly	1
2	GA5046955	19 x 19 x 1.6mm SS RHS cut 2150mm	1
3	*	Dry Sight Tube - Float Assembly	1
4	GA5051370	BHCS M8 x 35mm SS	1
5	GA5003643	Washer 8mm SS HD	2
6	GA5052590	Nut M8 Nyloc SS	1
7	GA5001101	Square tube Insert 19 x 19mm, Black	1

* Sub-assembly on previous and following pages

Dry Sight Tube - Float Assembly

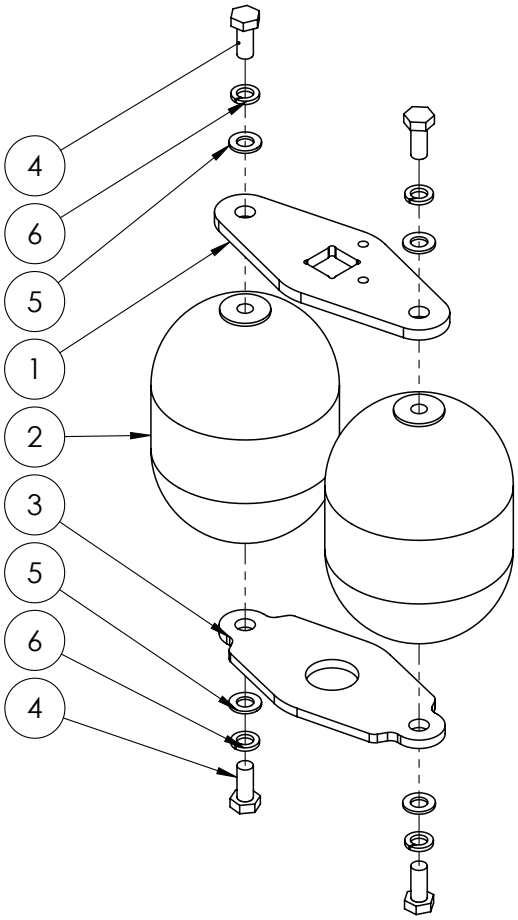

ITEM NO.	PART NUMBER	DESCRIPTION	QTY.
1	GA5070910	Float Plate Dry Sight Tube	1
2	GA5070911	Ball Float 4" Plastic 5/16" Whitworth Threads	2
3	GA4505300	Float Plate Dry Sight Tube SS Bottom Plate	1
4	GA5048485	Set Screw 5/16” whitworth x 3/4" SS	4
5	GA5003643	Washer 8mm Flat SS HD	4
6	GA5004919	Washer 8mm Spring SS	4

Dry Sight Tube - Cap & Tube Assembly

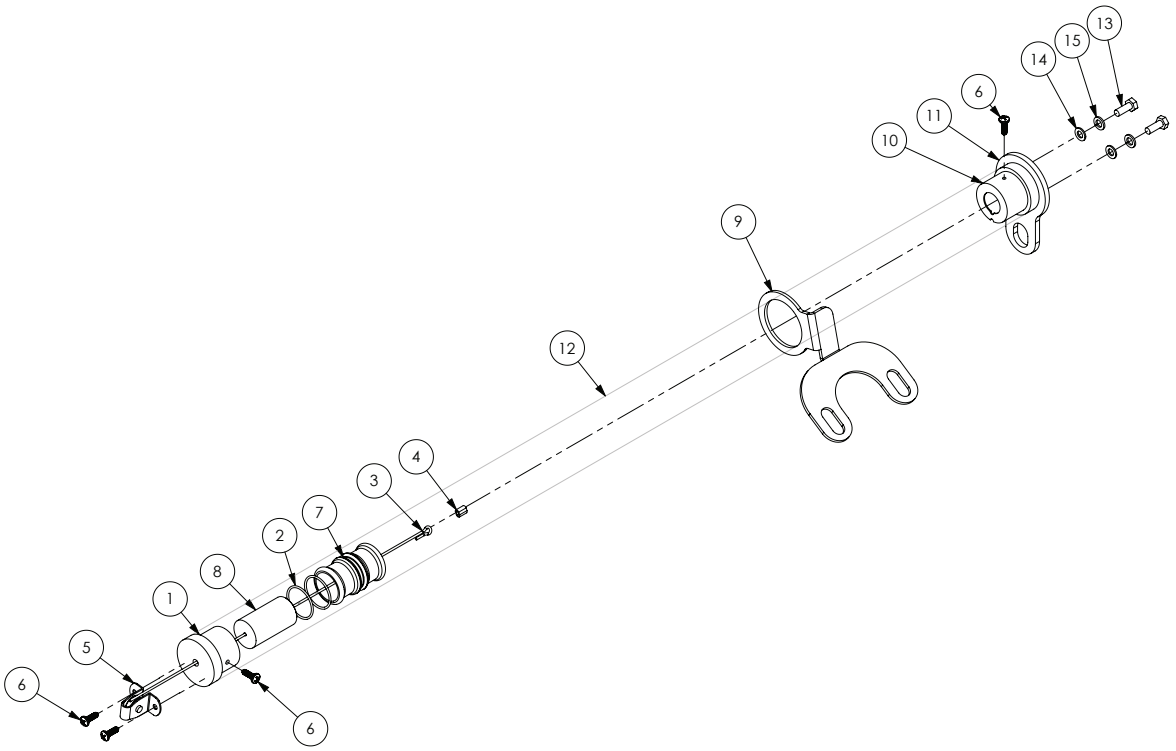

ITEM NO.	PART NUMBER	DESCRIPTION	QTY.
1	MACH0306	Remote sight tube end cap (Blk Poly)	1
2	GA5012529	O ring, 34.65 x 1.78mm, BS024	2
3	GA5017873	Cable, Wire rope, 0.8mm, 7x7 core, 316 SS, suit sight tube	1
4	GA5008643	Ferrule, Hand swage, Nickle plated copper, suits GA5017873 cable	1
5	GA5015221	Pulley, Upright, 19mm, Suit sight tube cable roller	1
6	GA5014817	Screw Pan Head 10g x 5/8 SS	4
7	MACH0307	Remote sight tube level indicator	1
8	MACH0317	Level Indicator Insert	1
9	F70668A	Sight Tube Locating Plate	1
10	MACH0316	Tube End Cap with Light Attachment	1
11	F70669A	Sight tube base mounting plate	1
12	GA5002979	Sight tube, Clear, 38 ID x 44 OD x 2000mm long, Polycarbonate	1
13	GA5004041	Bolt M6 x 16 GR8.8 ZP	3
14	GA5004437	Washer 6mm Flat SS	3
15	GA5004447	Washer 6mm Spring SS	3

Remote Drain - 4000-6500L

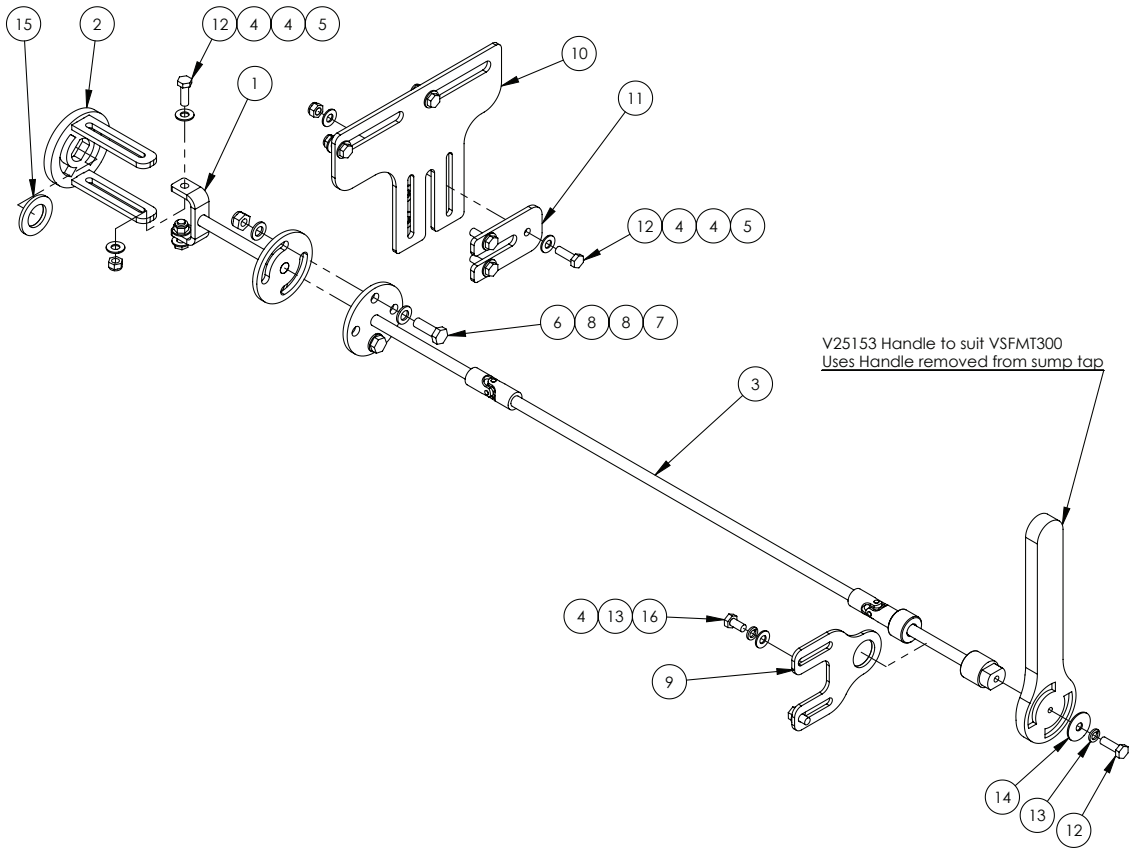

ITEM NO.	PART NUMBER	DESCRIPTION	QTY.
1	GA4653657	Sump ball valve inter drive shaft EF	1
2	GA4653656	Drive flange, suits Sump ball valve EF	1
3	GA4653658	Sump ball valve drive shaft EF	1
4	GA5003643	Washer 8mm Flat SS HD	16
5	GA5004917	Nut M8 Nyloc ZP	7
6	GA5065455	Bolt M10 x 30 ZP GR8.8	2
7	GA5000141	Nut M10 Nyloc ZP	2
8	GA5000117	Washer 10mm Flat SS HD	4
9	GA4513440	Plate, uni rod aligning & sump hose hanger	1
10	F70661A	Uni rod hanger plate	1
11	F70662A	Uni rod clamping plate 5mm FMS	1
12	GA5004711	Bolt M8 x 25 ZP GR8.8	8
13	GA5004919	Washer 8mm Spring SS	3
14	GA5003645	Washer, 5/16" ID x 1 1/4" OD, Flat SS	1
15	GA5001893	Washer 1" x 1 7/8" x 14G	1
16	GA5011465	Bolt M8 x 16 ZP GR8.8	2

Remote Drain - 7500/8500L

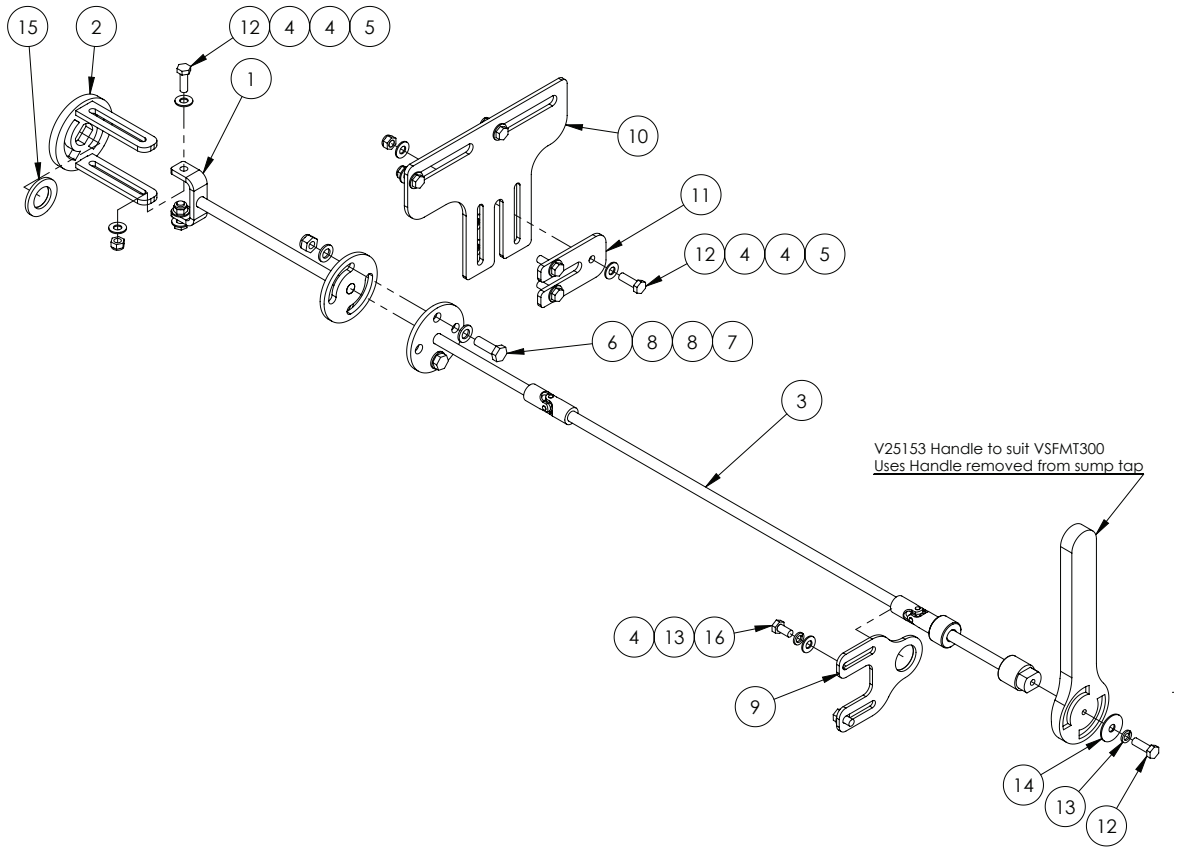

ITEM NO.	PART NUMBER	DESCRIPTION	QTY.
1	GA4653664	Sump ball valve inter drive shaft suit 7500 and 8500	1
2	GA4653656	Drive flange, suits Sump ball valve EF	1
3	GA4653658	Sump ball valve drive shaft EF	1
4	GA5003643	Washer 8mm Flat SS HD	16
5	GA5004917	Nut M8 Nyloc ZP	7
6	GA5065455	Bolt M10 x 30 ZP GR8.8	2
7	GA5000141	Nut M10 Nyloc ZP	2
8	GA5000117	Washer 10mm Flat SS HD	4
9	GA4513440	Plate, uni rod aligning & sump hose hanger	1
10	F70661A	Uni rod hanger plate	1
11	F70662A	Uni rod clamping plate 5mm FMS	1
12	GA5004711	Bolt M8 x 25 ZP GR8.8	8
13	GA5004919	Washer 8mm Spring SS	3
14	GA5003645	Washer, 5/16" ID x 1 1/4" OD, Flat SS	1
15	GA5001893	Washer 1" x 1 7/8" x 14G	1
16	GA5011465	Bolt M8 x 16 ZP GR8.8	2

Sump Drain Valve

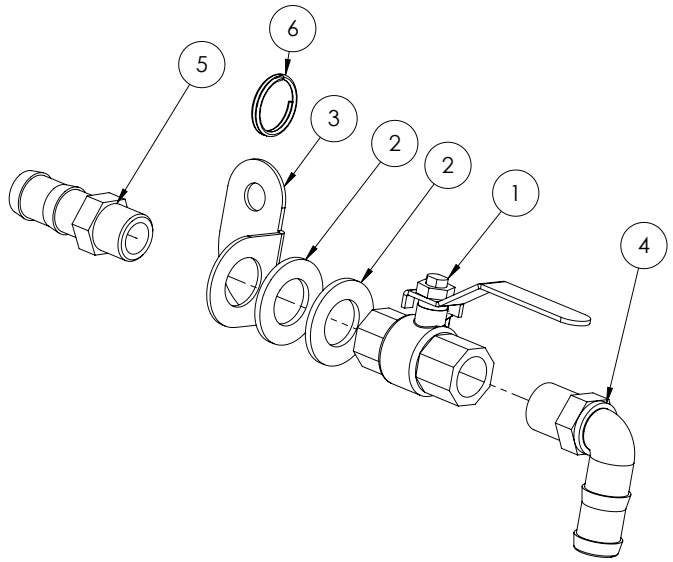

ITEM NO.	PART NUMBER	DESCRIPTION	QTY.
1	GA5018309	Valve, Ball, 12mm female thread inlet / outlet, Lever handle, SS	1
2	GA5001741	Washer 20mm Flat SS HD	2
3	GA4504980	Mounting Plate Bent Sump Drain	1
4	GA5077704	Hose barb, Elbow, 90 degree, 1/2" male thread x 3/4" hose, Banjo	1
5	GA5077707	Hose barb, 1/2" male thread x 3/4" hose, Banjo	1
6	GA5002077	Key ring, 25mm, SS	1

Tank Stops

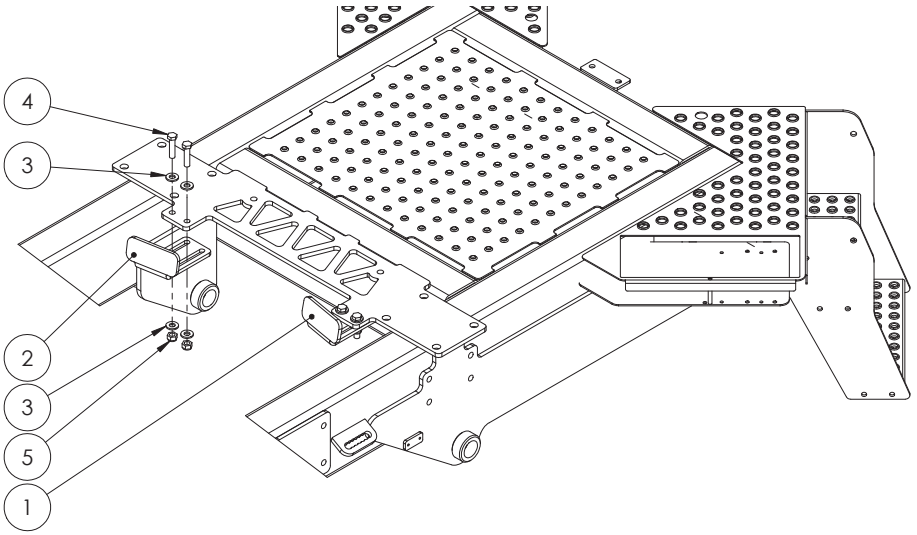

ITEM NO.	PART NUMBER	DESCRIPTION	QTY.
1	GA4522515	Front tank stop RHS	1
2	GA4522510	Front tank stop LHS	1
3	GA5000577	Washer 12mm Flat SS HD	8
4	GA5011239	Bolt, M12 x 50, ZP GR 8.8	4
5	GA5012461	Nut M12 Nyloc ZP	4

Tank Straps & Brackets - 4000-8500L

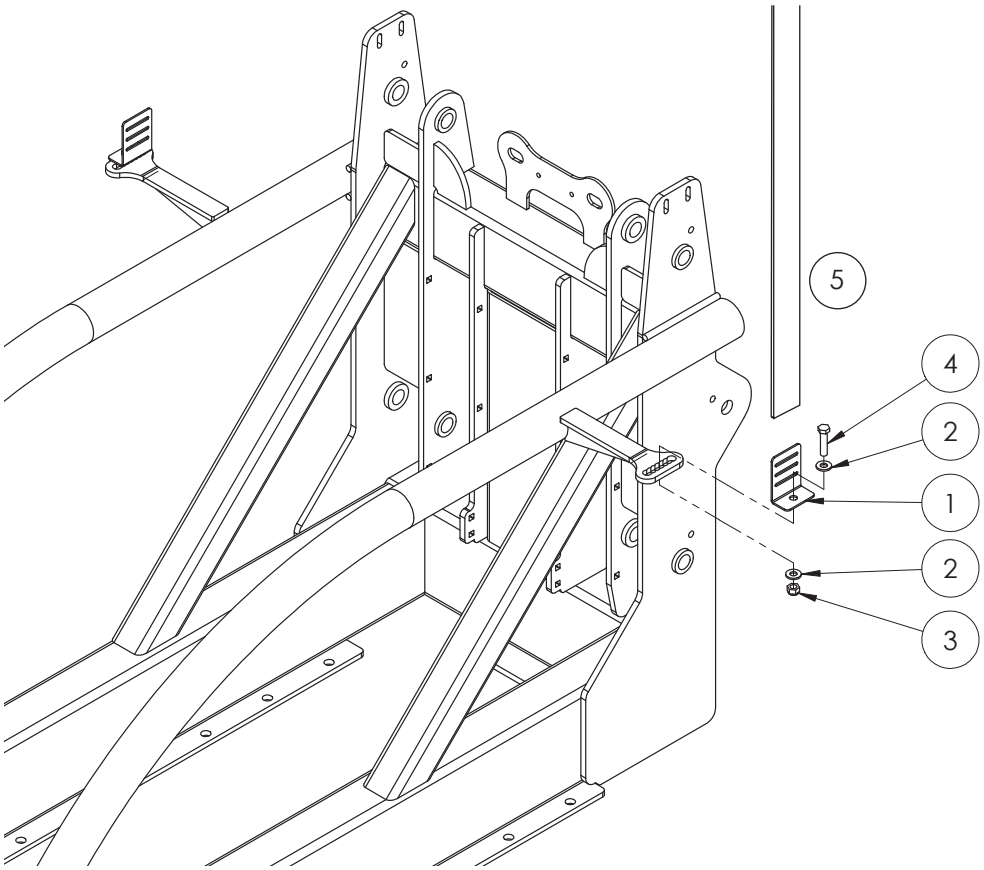

ITEM NO.	PART NUMBER	DESCRIPTION	QTY.
1	F70127A	Bracket, Tank strap, 50mm	4
2	GA5000577	Washer 12mm Flat SS HD	8
3	GA5012461	Nut M12 Nyloc ZP	4
4	GA5011239	Bolt, M12 x 50, ZP GR 8.8	4
5	GA5003859	Strap, Tank, 50mm, Goldacres branded, (price is per meter)	See below.
		4000L Tank - Cut length - Front	3600mm
		4000L Tank - Cut length - Rear	1900mm
		5000L Tank - Cut length - Front	4200mm
		5000L Tank - Cut length - Rear	2400mm
		6500L Tank - Cut length - Front	4300mm
		6500L Tank - Cut length - Rear	2400mm
		7500L Tank - Cut length - Front	4300mm
		7500L Tank - Cut length - Rear	2500mm
		8500L Tank - Cut length - Front	4300mm
		8500L Tank - Cut length - Rear	2500mm

Chapter 12

WHEELS, AXLES & MUDGUARDS

Air Bag Axle - 4000-6500L

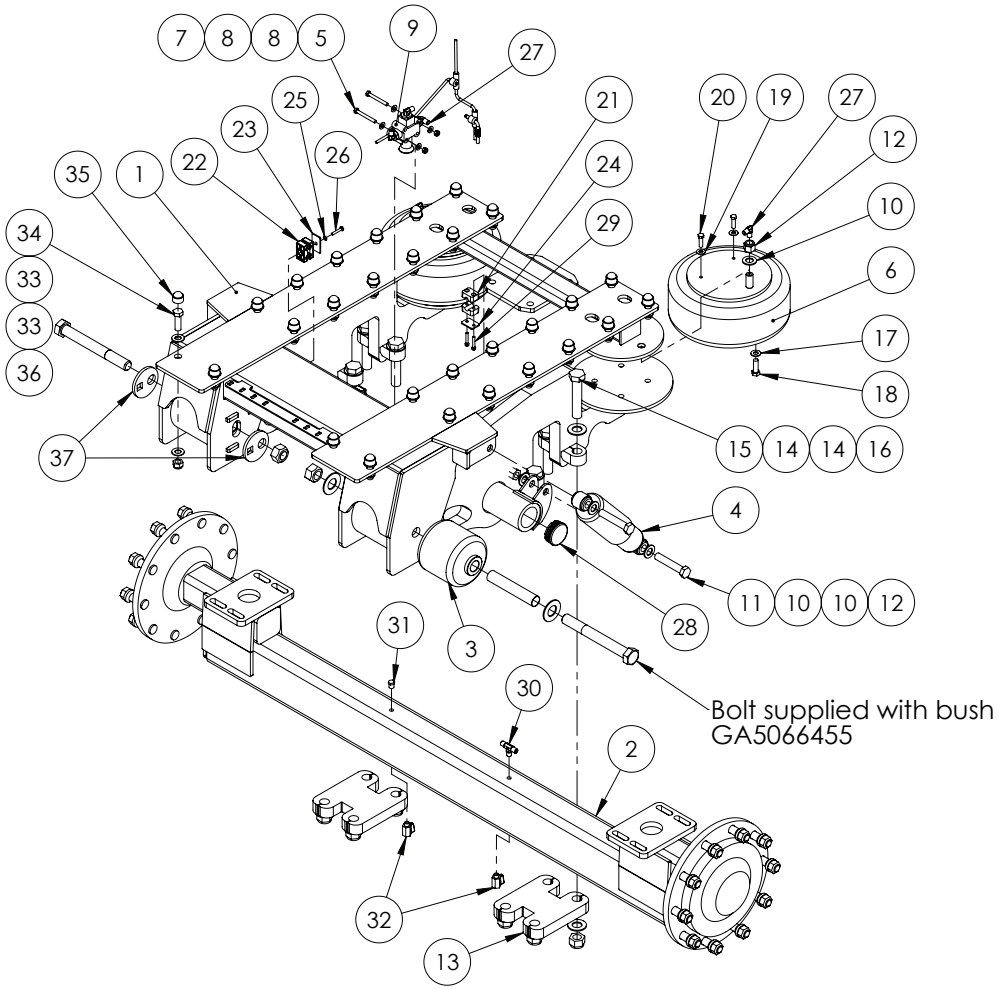

ITEM NO.	PART NUMBER	DESCRIPTION	QTY.
1	GA4652810	Axle airbag frame EF 2m to 3m	1
2	GA4656920	Axle EF AirBag 2000mm 10 Stud	1
	GA4656925	Axle EF AirBag 2050mm 10 Stud	
	GA4656930	Axle EF AirBag 2100mm 10 Stud	
	GA4656935	Axle EF AirBag 3000mm 10 Stud	
3	GA5071010	Bi-functional Bush, Trailing Airbag Suspension Frame, Includes Bolt, Nut and Sleeve	2

Continued over page

Air Bag Axle - 4000-6500L

ITEM NO.	PART NUMBER	DESCRIPTION	QTY.
4	GA5015139	Shock Absorber, Double eye, 19mm eye, 82mm OD, Black	2
5	GA5004738	Bolt M8 x 70 ZP GR8.8	2
6	GA5005311	Air spring HT230 single air stud	2
7	GA5004917	Nut M8 Nyloc ZP	2
8	GA5003643	Washer 8mm Flat SS HD	4
9	GA5010868	Ride height valve, 1/4" connecting rods	1
10	GA5001741	Washer 20mm Flat SS HD	13
11	GA5049490	Bolt 3/4" UNC x 4" ZP GR8	4
12	GA5048430	Nut, Nyloc, 3/4" UNC, ZP	6
13	GA4632050	Suspension narrow retainer (32mm FMS)	2
14	GA5017681	Washer 1" x 2" 7g Flat Thin SS	16
15	GA5006031	Bolt, 1" UNC x 5" ZP GR8	8
16	GA5012439	Nut, Nyloc, 1" UNC, ZP	8
17	GA5017673	Washer 1/2" High Tensile	8
18	GA5006167	Bolt, 1/2" UNC x 1 1/2", ZP GR8	8
19	GA5017623	Washer 3/8" Flat ZP HD	4
20	GA5002599	Set screw, 3/8" UNC x 1 1/4", SS	4
21	GA5078058	Mounting clamp, Single type, Jaw, Pair, Group 3, 14mm	4
22	GA5078031	Mounting clamp, Double type, Jaw, Pair, Group 2, 14mm	4
23	GA5078042	Mounting clamp, Double type, Plate, Top, Group 2	2
24	GA5078068	Mounting clamp, Single type, Plate, Top, Group 2	2
25	GA5004447	Washer, 6mm, Spring, SS	2
26	GA5011405	Bolt M6 x 35 ZP GR8.8	2
27	GA3500258	Hydraulic coupling, Elbow, 90 degree, 1/4" BSPT male x 1/4" BSPT male	5
28	GA5051366	End cap, 63.5 mm round, 1.25 - 2.0mm wall, black plastic	2
29	GA5011425	SHCS M6 x 35 SS A2-70	4
30	GA3500269	Hydraulic adaptor, Tee, 1/4" BSPT male x 1/4" BSPT male x 1/4" BSPT male	1
31	GA5069335	Plug, 1/4" BSPT male thread, Brass	1
32	GA5018323	Valve, Ball, 1/4" male, female, Black Lever handle, Chromed	2
33	GA5001043	Washer 16mm Flat SS HD	56
34	GA5000931	Bolt M16 x 50 ZP GR8.8	28
35	GA5075080	Hex nut protection cap, suit M16, Black	28
36	GA5001029	Nut M16 Nyloc ZP	28
37	GA4524630	Plate Alignment Eccentric Air bag	2

RIDE HEIGHT VALVE TEE

PART NUMBER	DESCRIPTION
GA5014651	Tee, Rubber, Suit ride height levelling valve rods

Air Bag Axle - 7500/8500L

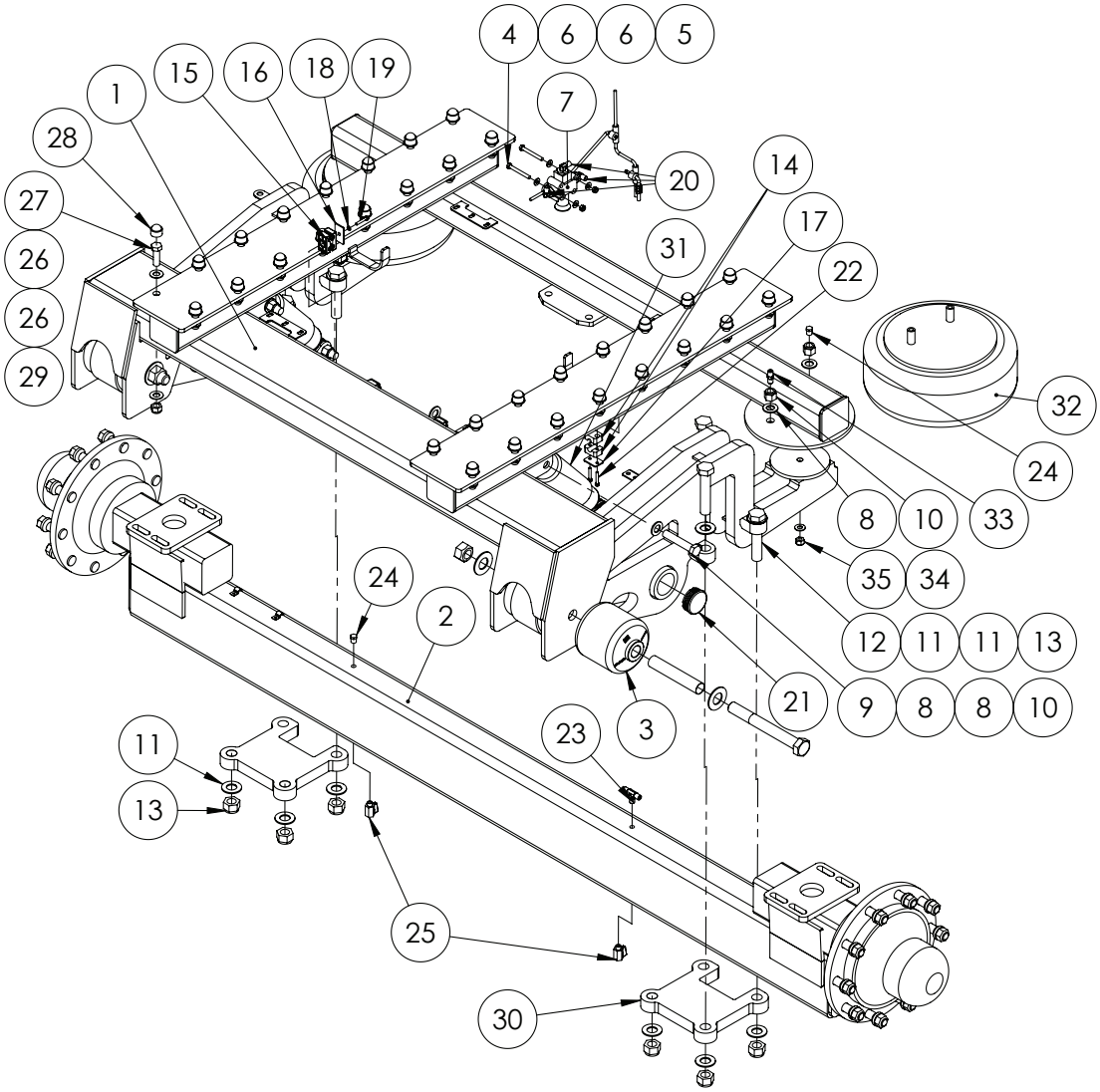

ITEM NO.	PART NUMBER	DESCRIPTION	QTY.
1	GA4652838	Axle airbag frame wide suit 7500 and 8500L 2.7m+	1
	GA4652839	Axle airbag frame narrow suit 7500 & 8500L 2.2m to 2.7m	
2	GA4652865	Axle unbraked 8000L Airbag (3000mm)	1
	GA4652870	Axle unbraked 8000L Airbag (2800mm)	
	GA4652871	Axle suit 8000 narrow airbag (2200mm)	
3	GA5071010	Bi-functional Bush, Trailing Airbag Suspension Frame, Includes Bolt, Nut and Sleeve	2
4	GA5004738	Bolt M8 x 70 ZP GR8.8	2
5	GA5004917	Nut M8 Nyloc ZP	2
6	GA5003643	Washer 8mm Flat SS HD	4
7	GA5010868	Ride height valve, 1/4" connecting rods	1
8	GA5001741	Washer 20mm Flat SS HD	14
9	GA5049490	Bolt 3/4" UNC x 4" ZP GR8	4

Continued over page

Air Bag Axle - 7500/8500L

ITEM NO.	PART NUMBER	DESCRIPTION	QTY.
10	GA5048430	Nut, Nyloc, 3/4", UNC, ZP	8
11	GA5017659	Washer, 1", Flat, ZP, Heavy duty (5mm thick)	17
12	GA5006031	Bolt, 1" UNC x 5" ZP GR8	10
13	GA5012439	Nut, Nyloc, 1" UNC, ZP	8
14	GA5078058	Mounting clamp, Single type, Jaw, Pair, Group 3, 14mm	4
15	GA5078031	Mounting clamp, Double type, Jaw, Pair, Group 2, 14mm	6
16	GA5078042	Mounting clamp, Double type, Plate, Top, Group 2	3
17	GA5078068	Mounting clamp, Single type, Plate, Top, Group 2	2
18	GA5004447	Washer, 6mm, Spring, SS	3
19	GA5011405	Bolt M6 x 35 ZP GR8.8	3
20	GA3500258	Hydraulic coupling, Elbow, 90 degree, 1/4" BSPT male x 1/4" BSPT male	3
21	GA5051366	End cap, 63.5 mm round, 1.25 - 2.0mm wall, black plastic	2
22	GA5011425	SHCS M6 x 35 SS	4
23	GA3500269	Hydraulic adaptor, Tee, 1/4" BSPT male x 1/4" BSPT male x 1/4" BSPT male	1
24	GA5069335	Plug, 1/4" BSPT male thread, Brass	3
25	GA5018323	Valve, Ball, 1/4 male, female, Black Lever handle, Chromed	2
26	GA5001043	Washer 16mm Flat SS HD	64
27	GA5000931	Bolt M16 x 50 ZP GR8.8	32
28	GA5075080	Hex nut protection cap suit M16, Black	32
29	GA5001029	Nut M16 Nyloc ZP	32
30	GA4612225	Bottom axle retaining plate 7500 and 8500L	2
31	GA5015139	Shock Absorber, Double eye, 19mm eye, 82mm OD, Black	2
32	GA5005115	Air Spring AA300 dual air stud	2
33	GA3500218	Hydraulic adaptor, Nipple, 1/4" BSPT male x 1/4" BSPT male	2
34	GA5017673	Washer 1/2" High Tensile	2
35	GA5050580	Nut 1/2" UNC Nyloc ZP	2

RIDE HEIGHT VALVE TEE

PART NUMBER	DESCRIPTION
GA5014651	Tee, Rubber, Suit ride height levelling valve rods

Rigid Axle

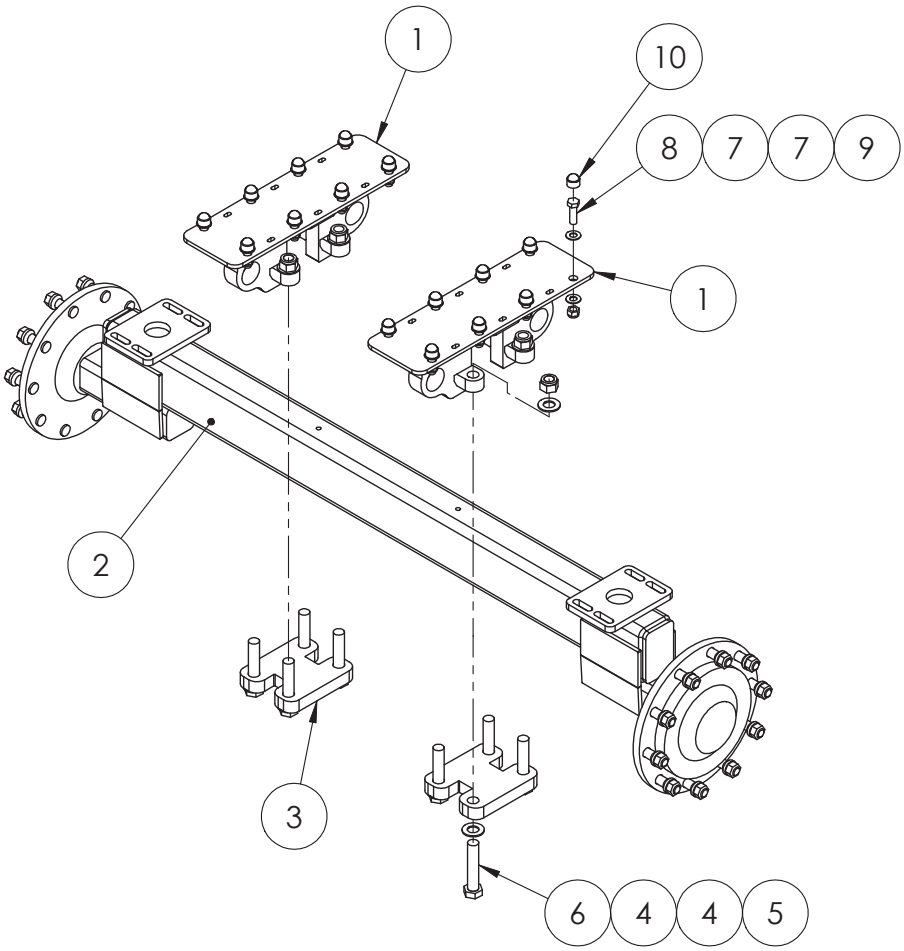

ITEM NO.	PART NUMBER	DESCRIPTION	QTY.
1	GA4652986	Axle carrier suit EF chassis	2
2	GA4656921	Axle EF Rigid 2000mm 10 Stud	1
	GA4656926	Axle EF Rigid 2050mm 10 Stud	
	GA4656931	Axle EF Rigid 2100mm 10 Stud	
	GA4656936	Axle EF Rigid 3000mm 10 Stud	
3	GA4632050	Suspension narrow retainer (32mm FMS)	2
4	GA5017659	Washer, 1", Flat, ZP, Heavy duty (5mm thick)	16
5	GA5012439	Nut, Nyloc, 1" UNC, ZP	8
6	GA5006031	Bolt, 1" UNC x 5" ZP GR8	8
7	GA5001043	Washer 16mm Flat SS HD	32
8	GA5000931	Bolt M16 x 50 ZP GR8.8	16
9	GA5001029	Nut M16 Nyloc ZP	16
10	GA5075080	Hex nut protection cap, suit M16, Black	16

Braked Axle Assembly

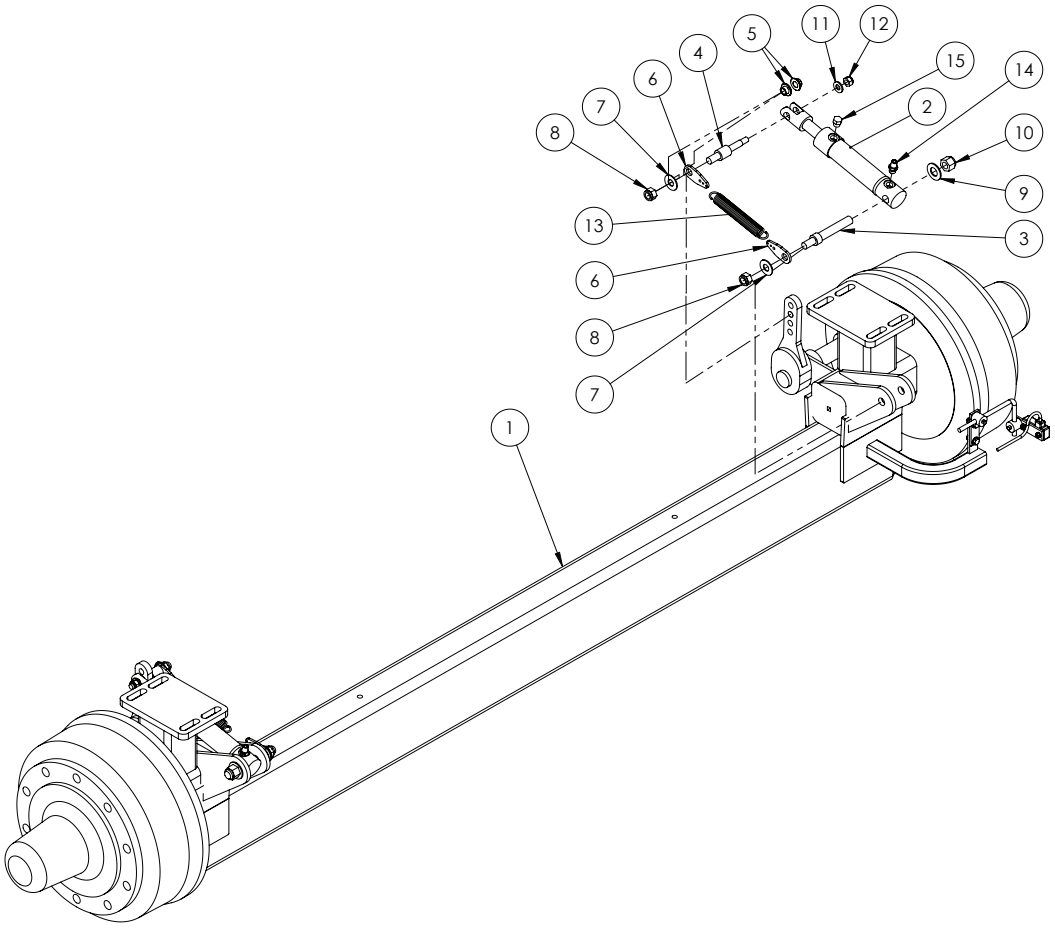

ITEM NO.	PART NUMBER	DESCRIPTION	QTY.
1	GA4652852	Axle suit airbag 2100mm - 10 stud braked	1
	GA4652872	2200mm Braked Axle	
	GA4652869	2800mm Braked Axle	
	GA4652866	3000mm Braked Axle	
2	GA5016121	Hydraulic cylinder 1" rod x 1.5" bore x 100mm stroke	2
3	MACH0201	Spring and ram mounting pin	2
4	MACH0202	Spring and ram mounting pin	2
5	MACH0200	Ram clevis spacer bush 32 x 16mm hollow bar	4
6	F70121A	Hopper spring retainer 5mm SS	4
7	GA5001043	Washer 16mm Flat SS HD	4
8	GA5001029	Nut M16 Nyloc ZP	4
9	GA5002539	Washer 3/4" Flat ZP	2
10	GA5048430	Nut, Nyloc, 3/4", UNC, ZP	2
11	GA5000577	Washer 12mm Flat SS HD	2
12	GA5012461	Nut M12 Nyloc ZP	2
13	GA5007755	Spring, Tension, 25 OD x 180 long x 3mm, Suit trailer Brakes	2
14	GA3500358	Hydraulic adaptor, Nipple, 1/4" BSPT male x 9/16" UN male O-ring	2
15	GA3500380	Hydraulic adaptor, Plug, 9/16" UN male O-ring	2

Brake Mechanism Assembly

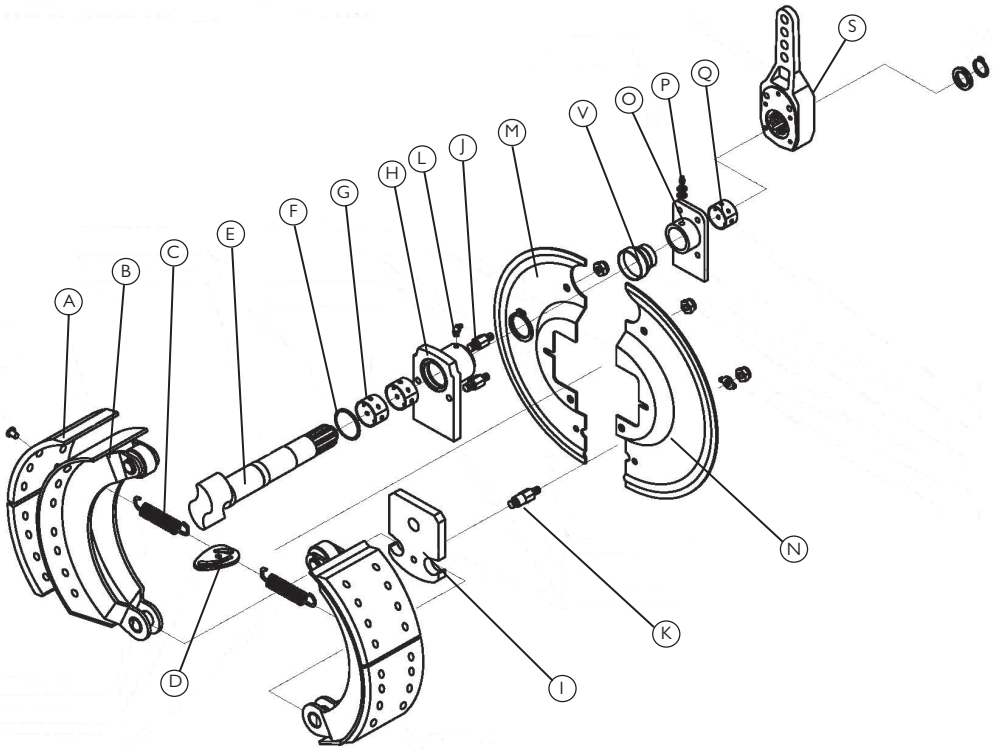

ITEM NO.	PART NUMBER	DESCRIPTION	QTY
A	GA5062505	Brake Shoe	2
B	GA5062510	Brake Shoe Holder	2
C	GA5062515	Brake Return Spring	2
D	GA5062520	Brake Return Spring Mount	1
E	GA5062525	S Cam	1
F	GA5062530	O-Ring	1
G	GA5062535	Spacers	2
H	GA5062540	S Cam Mount	1
I	GA5062545	Lower Brake Shoe Mount	1
J	GA5062550	Spacer stud short	2
K	GA5062555	Spacer stud long	1
L	GA5062560	Grease Nipple	1
M	GA5062565	Backing Plate (Left)	1
N	GA5062570	Backing Plate (Right)	1
O	GA5062575	Brake Lever Mount	2
P	GA5062580	Grease Nipple (long)	2
Q	GA5062585	Spacer Bush	1
R	GA5062590	Nut	2
S	GA5062595	Brake Lever	1
T	GA5062600	Washer	1
U	GA5062605	Circlip	1
V	GA5062610	Rubber Boot	1
-	GA5062615	Brake Drum (Not Shown)	1

Steering Axle Assembly

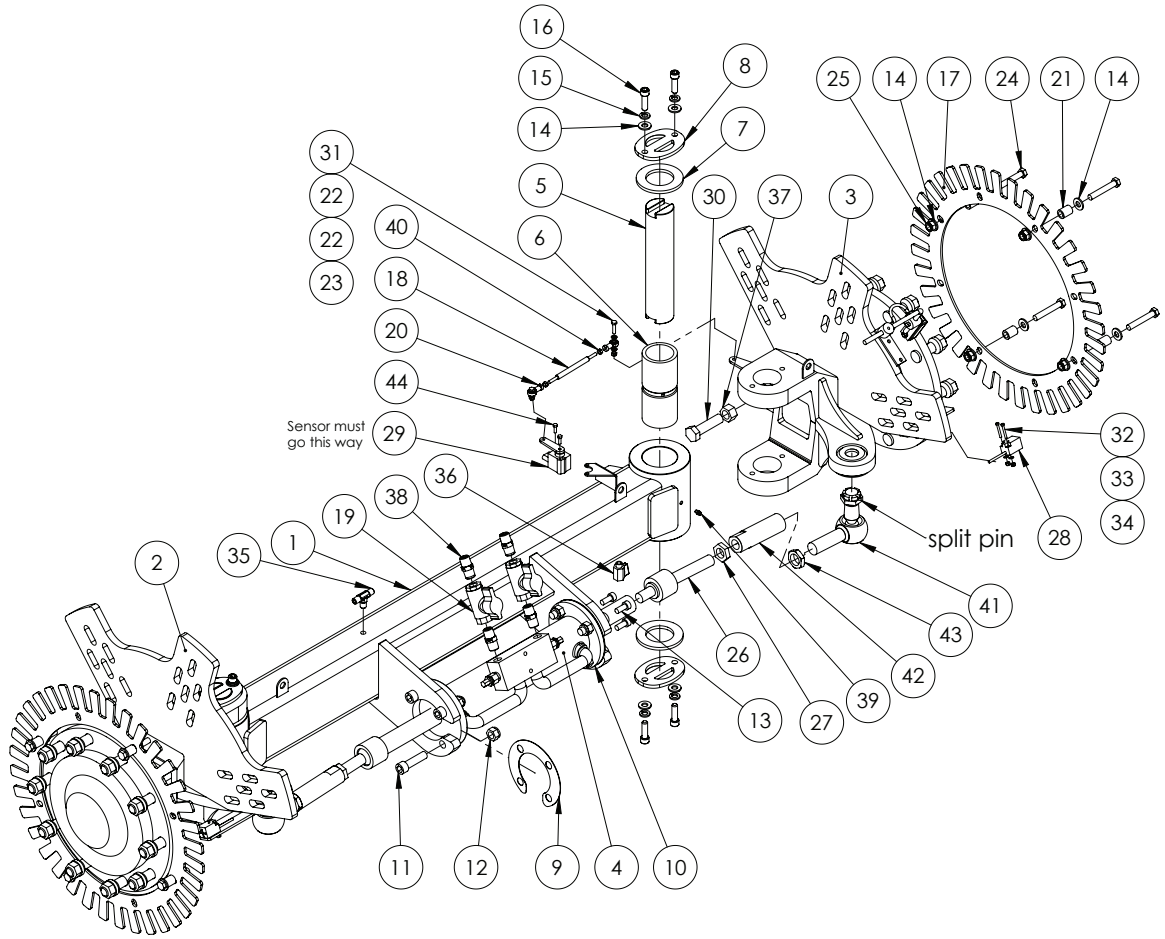

ITEM NO.	PART NUMBER	DESCRIPTION	QTY.
1	GA4652730	Axle Advance EF steerable	1
2	GA4652972	Steering arm & stub axle assembly, Left side, Prairie Advance	1
3	GA4652971	Steering arm & stub axle assembly, Right side, Prairie Advance	1
4	GA5066585	Hydraulic cylinder suit steering axle	1
5	GA4552315	Steering king pin	2
6	GA4552310	Bush, 75.2 OD x 60 ID x 170mm long, Nylube	2
7	GA4552305	Thrust washer	4
8	GA4502280	Pin retainer	4
9	GA4514640	Steering ram shim plate	2
10	GA4514635	Flange plate for steering ram	1
11	GA5048680	SHCS M16 x 60 ZP GR12.9	8
12	GA5001029	Nut M16 Nyloc ZP	8
13	GA5070250	SHCS 7/16" UNF x 1" ZP GR12.9	4
14	GA5000577	Washer 12mm Flat SS HD	24
15	GA5000575	Washer 12mm Spring SS	8
16	GA5000321	SHCS M12 x 40 ZP GR12.9	8

Continued over page

Steering Axle Assembly

ITEM NO.	PART NUMBER	DESCRIPTION	QTY.
17	GA4535570	Wheel Speed Sensor Disc For Steering (36 Instances)	2
18	GA4583065	Link Rod Steering Axle Sensor	1
19	GA5000835	Valve, Ball, Hydraulic, 1/2" female thread inlet / outlet	2
20	GA5052725	Rod End 6mm female	2
21	24MK3CS011M	Crush tube for ram TILT replacement links	8
22	GA5004437	Washer 6mm Flat SS	4
23	GA5048115	Nut M6 Nyloc ZP	2
24	GA5000351	Bolt M12 x 75 ZP GR8.8	8
25	GA5012461	Nut M12 Nyloc ZP	8
26	GA5065045	Ball joint, Inline, M24 x 1.5 pitch x M22 x 1.5 pitch	2
27	GA5011341	Nut M24 x 1.5 Pitch Hex Lock ZP	2
28	GA5076542	38412-1 Sensor, prox SPD	2
29	GA5047668	Sensor, angle of rotation, Smart steer axle	1
30	GA5001567	Bolt M20 x 75 ZP GR8.8	2
31	GA5004073	Bolt M6 x 25 ZP GR8.8	2
32	GA5011367	SHCS M4 x 30 ZP GR12.9	4
33	GA5020510	Washer 4mm Flat SS	4
34	GA5049025	Nut M4 Nyloc SS	4
35	GA3500269	Hydraulic adaptor, Tee, 1/4” BSPT male x 1/4” BSPT male x 1/4” BSPT male	1
36	GA5018323	Valve, Ball, 1/4” male / female thread inlet / outlet, SS, Lever handle	2
37	GA5001709	Nut M20 Coarse Hex ZP	2
38	GA3500223	Hydraulic adaptor, Nipple, 1/2” BSPT male x 1/2” BSPT male	4
39	GA5012203	Grease nipple, Short, 1/4” UNF	2
40	GA5049030	Nut M6 Hex SS	2
41	GA5065041	Ball joint, Right angle, M28 x 1.5 thread	2
42	GA4572156	Tie rod, For 2m standard front axle, M24 to M28 x 130mm long	2
43	GA4572170	Lock nut, M28 x 1.5P, Suit tie rod end	2
44	GA5003577	Bolt M5 x 16 ZP GR8.8	2

Wheel Speed Sensor

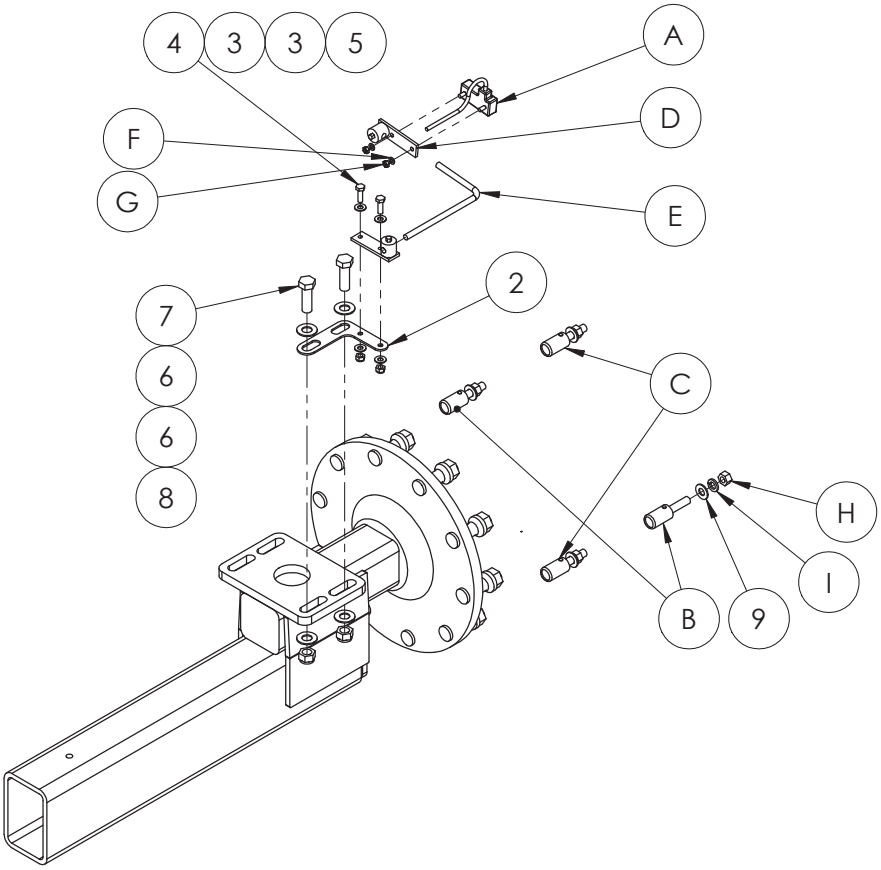

GA5075858 Wheel speed sensor kit

ITEM NO.	PART NUMBER	DESCRIPTION	QTY.
A	GA5075857	Sensor, Wheel Drive Speed with 7 1/2' Cable, Raven	1
B	GA5075817	Magnet, Red North Pole Speed Sensor Assembly, Raven	2
C	GA5075818	Magnet, Black South Pole Speed Sensor Assembly, Raven	2
D	GA5075822	Sensor, Turret Assembly Speed Sensor, Raven	2
E	GA5076045	Rod, Speed Sensor, Raven	1
F	3131000016	Washer 1/4" lock split zinc	2
G	3121001031	Nut 1/4" - 20 hex ZP	2
H	3121001043	Nut 1/2" - 13 hex ZP	4
I	3131000028	1/2" lock washer	4
1	GA5075858	Sensor, Speed 4 Pole Wheel Drive with 7 1/2' Cable Kit, Raven	1
2	GA4534520	Speed Sensor Tab Bolt On	1
3	GA5003643	Washer 8mm Flat SS HD	4
4	GA5004711	Bolt M8 x 25 ZP GR8.8	2
5	GA5004917	Nut M8 Nyloc ZP	2
6	GA5001043	Washer 16mm Flat SS HD	4
7	GA5000931	Bolt M16 x 50 ZP GR8.8	2
8	GA5001029	Nut M16 Nyloc ZP	2
9	GA5017655	Washer 1/2" Flat SS	4

Wheels

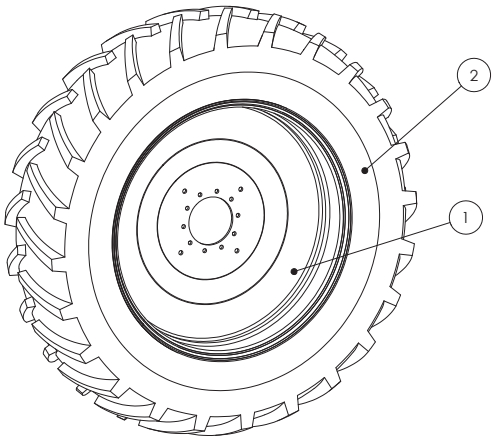

Note: When ordering complete wheel and tyre unit, please note which side is required. Rims are supplied painted and with speed sensor holes.

18.4 x 38" WHEELS

PART NUMBER	DESCRIPTION
GA4901410-10	Complete wheel and tyre
GA5018820	Wheel DW 15 x 38, 10 studs on 335, 0 offset
GA5001108	Tyre 18.4 x 38 (16 Ply)

20.8 x 42" WHEELS

PART NUMBER	DESCRIPTION
GA4901415	Complete wheel and tyre
GA5020340	Wheel, DW18 x 42, 10 studs on 335, 0 offset
GA5020830	Tyre, 20.8 X 42 (16 Ply) TLR

24.5 x 32" WHEELS

PART NUMBER	DESCRIPTION
GA4901404	Complete wheel and tyre
GA5018814	Wheel DW 21 X 32, 10 studs on 335, 0 offset
GA5001837	Tyre 24.5 X 32 (16 Ply)

30.5 x 32" WHEELS

PART NUMBER	DESCRIPTION
GA4901405	Complete wheel and tyre
GA5018816	Wheel, DW27 x 32, Zero offset
GA5002707	30.5 x 32 (16ply) Olympic Gripster TL

WHEEL NUTS

PART NUMBER	DESCRIPTION
GA5018892	Wheel nut, M22 x 1.5mm, ZP
GA5018900	Tapered spring Washers suit M22 wheel stud (329F003)
GA5054675	Cap M20 hex Wheel nut cover

Mudguards

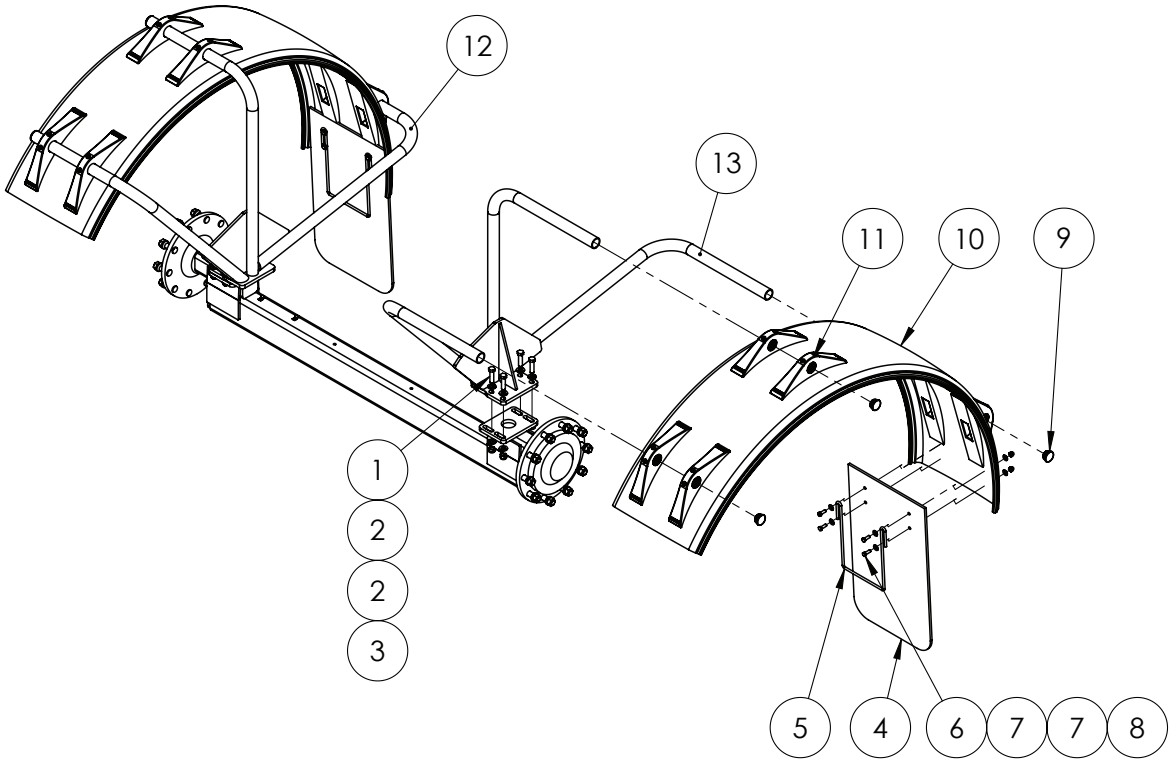

ITEM NO.	PART NUMBER	DESCRIPTION	QTY.
1	GA5001043	Washer 16mm Flat SS HD	16
2	GA5000939	Bolt M16 x 60 Black GR8.8	8
3	GA5001029	Nut M16 Nyloc ZP	8
4	GA5051305	Mudflap, Flexible plastic, 450 x 770mm, Goldacres branding	2
5	GA5075070	Bracket, Mud guard anti sail, Black	2
6	GA5002565	Washer, 3/8" ID x 1" OD, Flat SS	16
7	GA5011133	Nut M10 Dome nut SS	8
8	GA5006145	Bolt M10 x 30 SS	8
9	GA5003925	End cap, 45 mm round, Black plastic	6
10	GA5066976	Mudguard Dunloflex 510W x R1010mm (R51.265)	2
	GA5004263	Mudguard 630W x R1000mm	
11	GA5066977	Mudguard Bracket Dunloflex suit 48.3mm pipe (H50.660)	12
12	Refer to tables over page for mudguard bracket part numbers		1
13			1

Continued over page

Mudguards

32” WHEELS, AIR BAG AXLE

PART NUMBER	DESCRIPTION
GA4900591-EF-NS-32	Mudguard kit airbag axle 32”
GA4655078	Mudguard Bracket 38" RH EF rigid
GA4655079	Mudguard Bracket 38" LH EF rigid

38” WHEELS, AIR BAG AXLE

PART NUMBER	DESCRIPTION
GA4900591-EF-NS-38	Mudguards kit 38" to suit EF with a/bag suspension
GA4655078	Mudguard Bracket 38" RH EF airbag
GA4655079	Mudguard Bracket 38" LH EF airbag

38” WHEELS, RIGID AXLE

PART NUMBER	DESCRIPTION
GA4900591-P-EF-R	Mudguards kit 38" to suit EF with rigid axle
GA4655082	Mudguard Bracket 38" RH EF non airbag
GA4655083	Mudguard Bracket 38" LH EF non airbag

42” WHEELS, AIR BAG AXLE

PART NUMBER	DESCRIPTION
GA4900591-EF-NS-42	Mudguards kit 42" to suit EF with a/bag suspension
GA4655076	Mudguard Bracket 42" RH EF airbag
GA4655077	Mudguard Bracket 42" LH EF airbag

42” WHEELS, RIGID AXLE

PART NUMBER	DESCRIPTION
GA4900591-P-EF-R-42	Mudguards kit 42" to suit EF with rigid axle
GA4655088	Mudguard Bracket 42" RH EF non airbag
GA4655089	Mudguard Bracket 42" LH EF non airbag

38” & 42” WHEELS, STEERING AXLE (NOT SHOWN)

PART NUMBER	DESCRIPTION	QTY
GA4900591-EF-S	Mudguards - EF Advance/SmartSteer 18.4 x 38 Poly & mudflaps	1
GA4655247	Mudguard Bracket EF steer suit 500W	6
GA5001029	Nut M16 Nyloc ZP	2
GA5003825	Mudguard, Black plastic, 500 wide x 1000mm radius	18
GA5000941	Bolt M16 x 60 ZP GR8.8	18
GA5001043	Washer 16mm Flat SS HD	36
GA5075070	Bracket, Mud guard anti sail, Black	2
GA5051305	Mudflap, Flexible plastic, 450 x 770mm, Goldacres branding	2
GA5066162	Bolt M10 x 25 SS	12
GA5011133	Nut M10 Dome nut SS	20
GA5002665	30 Series Plugs	40
GA5006145	Bolt M10 x 30 SS	8

Hub - 90 Series - Unbraked

Note: Measure the cross section to determine size/series.

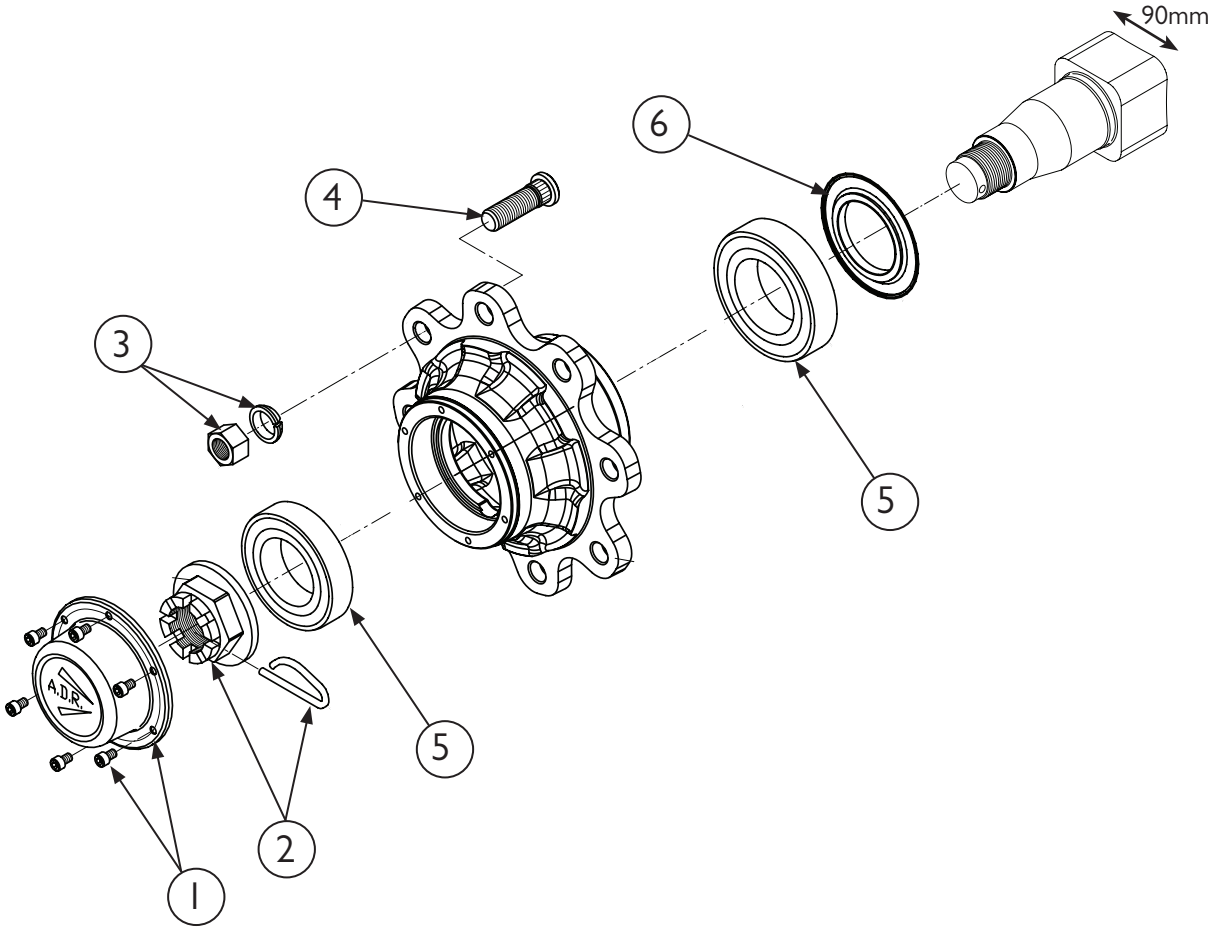

ITEM NO.	PART NUMBER	DESCRIPTION	QTY.
-	GA5018119	Stub axle, 90 series, ADR	-
1	GA5052120	Cap Kit, 90 series, ADR	1
2	GA5052190	Crown Nut Kit, 80/90 Series, ADR	1
3	GA5052165	Wheel nut kit, Suit 90 / 110 series stub axle, ADR (set of 10)	1
4	GA5052205	Wheel stud kit, 90 Series, ADR (set of 10)	1
5	GA5052200	Bearing Kit, 90 Series, ADR	1
6	GA5066405	Seal kit, 90 Series, ADR	1

Hub - 110 Series - Unbraked

Note: Measure the cross section to determine size/series.

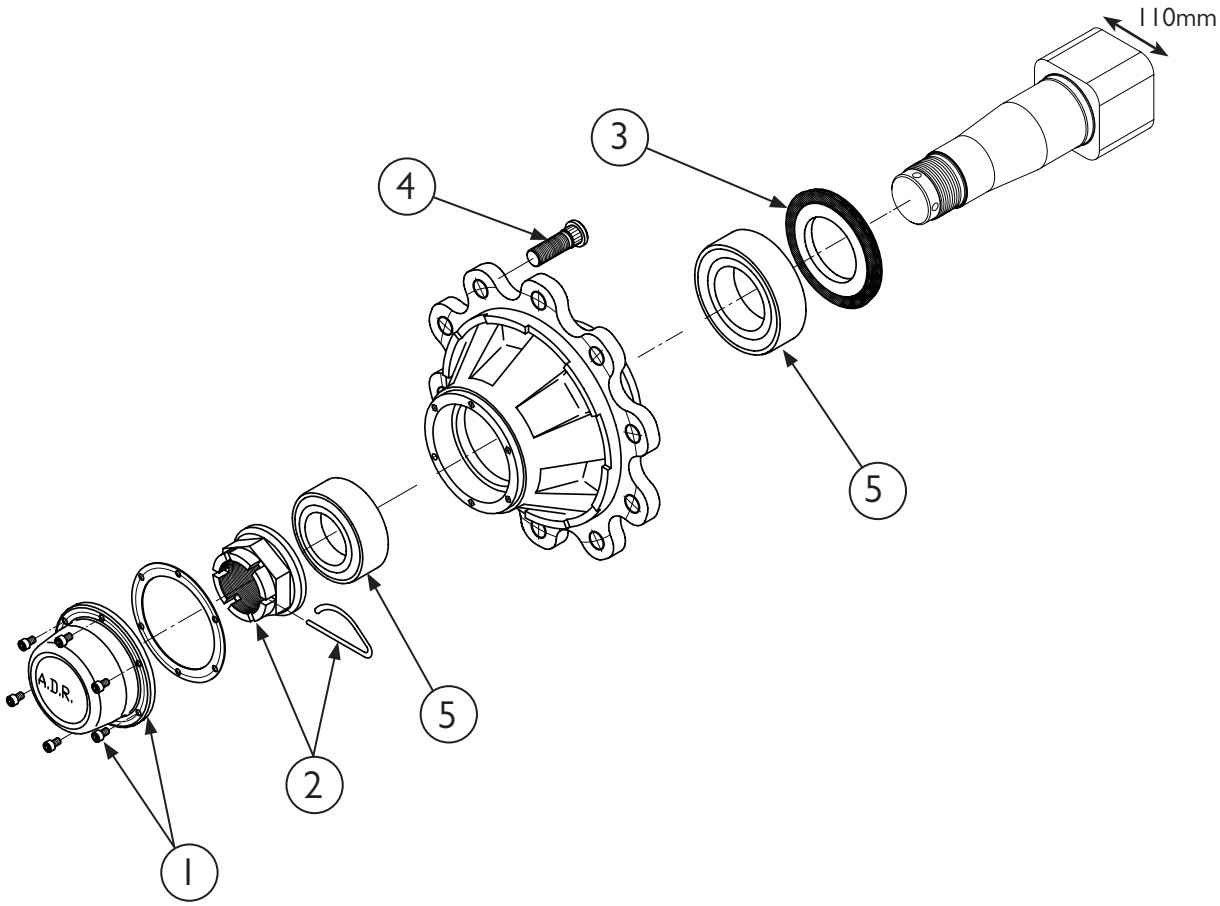

ITEM NO.	PART NUMBER	DESCRIPTION	QTY.
-	GA5050300	Stub axle, 110 Series, Unbraked, ADR	-
-	GA5052165	Wheel nut kit, Suit 90 / 110 series stub axle, ADR (set of 10)	-
1	GA5052145	Cap kit, 110 Series, ADR	1
2	GA5052140	Crown nut kit, 110 Series, ADR	1
3	GA5023675	Seal kit, 110 Series, Unbraked, ADR	1
4	GA5018837	Wheel stud, M22 x 1.5, Suit 110 series hub	10
5	GA1700008	Bearing kit, 110 Series, Unbraked, ADR	1

Hub - 110 Series - Braked (New Series)

Note: Measure the cross section to determine size/series.

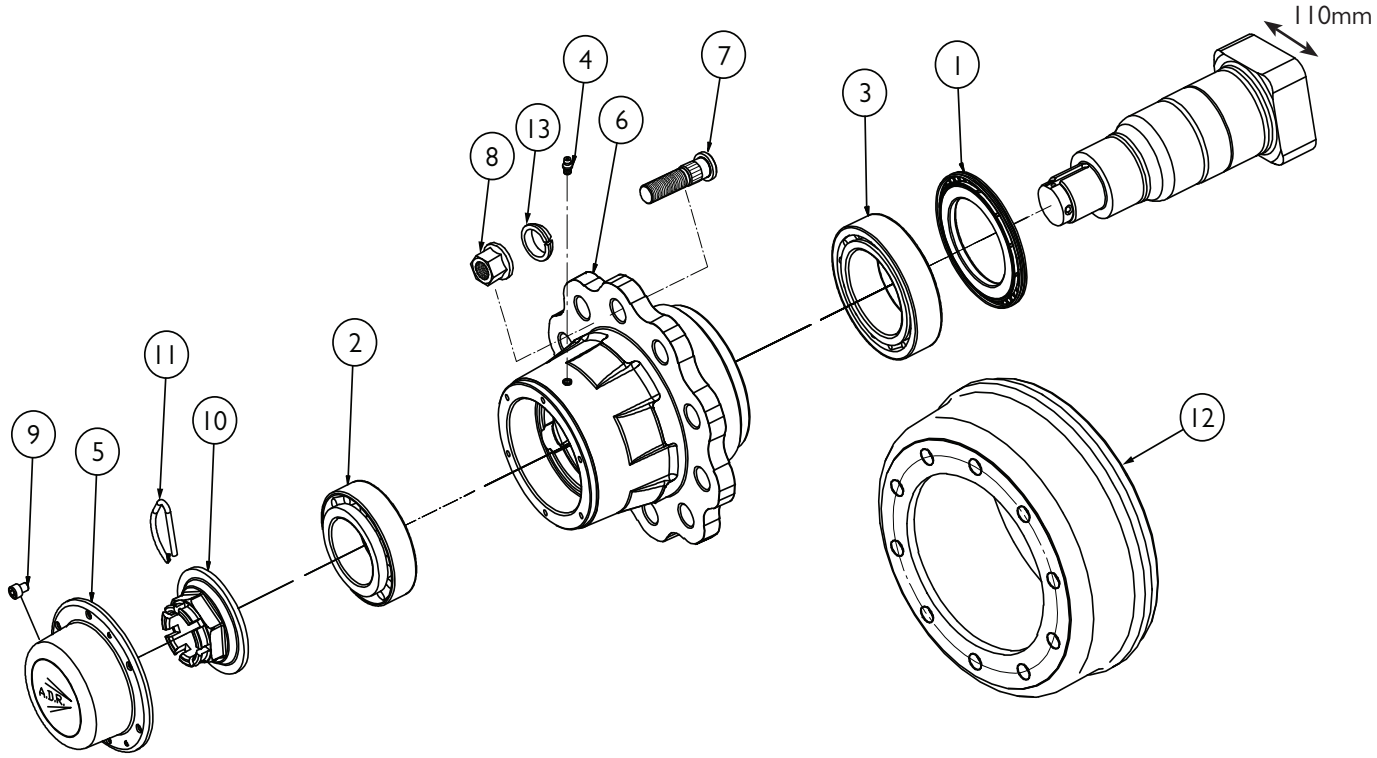

ITEM NO.	PART NUMBER	DESCRIPTION	QTY.
-	GA5018121	Stub axle, 110 Series, LH, Braked, ADR (New Series)	-
-	GA5018120	Stub axle, 110 Series, RH, Braked, ADR (New Series)	-
1	GA5073565	Grease seal, 110 Series, Unbraked and Braked, ADR, 5441402, 140 OD x 92mm ID, 5441402, 9RNUA.	1
2	GA5052135	Bearing kit, 110 Series, Braked, 33215, 33118, check serial number before ordering, ADR	1
3	GA5052135	Bearing kit, 110 Series, Braked, 33215, 33118, check serial number before ordering, ADR	1
4	GA5024086	Grease Nipple, M8 Straight, 100 Series, ADR	1
5	GA5024083	Cap, with gasket, 100 Series, ADR	1
6	GA5078983	Hub, 10 Hole, ADR, 120/140, 61L1UA004	1
7	GA5052125	Stud kit, 110 Series, Braked, ADR	1
8	GA5052165	Wheel nut kit, Suit 90 / 110 series stub axle, ADR (set of 10)	1
9	GA5024084	SHCS M8 x 1.25P, 100 Series, ADR	10
10	GA5024088	Crown Nut, 100 Series, ADR	1
11	GA5024089	Spring Pin, 100 Series, ADR	1
12	66LVA1001	Brake Drum,. 406x120x10, LOCH	1
13	574221	Washer, Stud Nut, (REFER TO WHEEL NUT KIT ITEM 8)	-

Hub - 110 Series - Braked (Old Series)

Note: Measure the cross section to determine size/series.

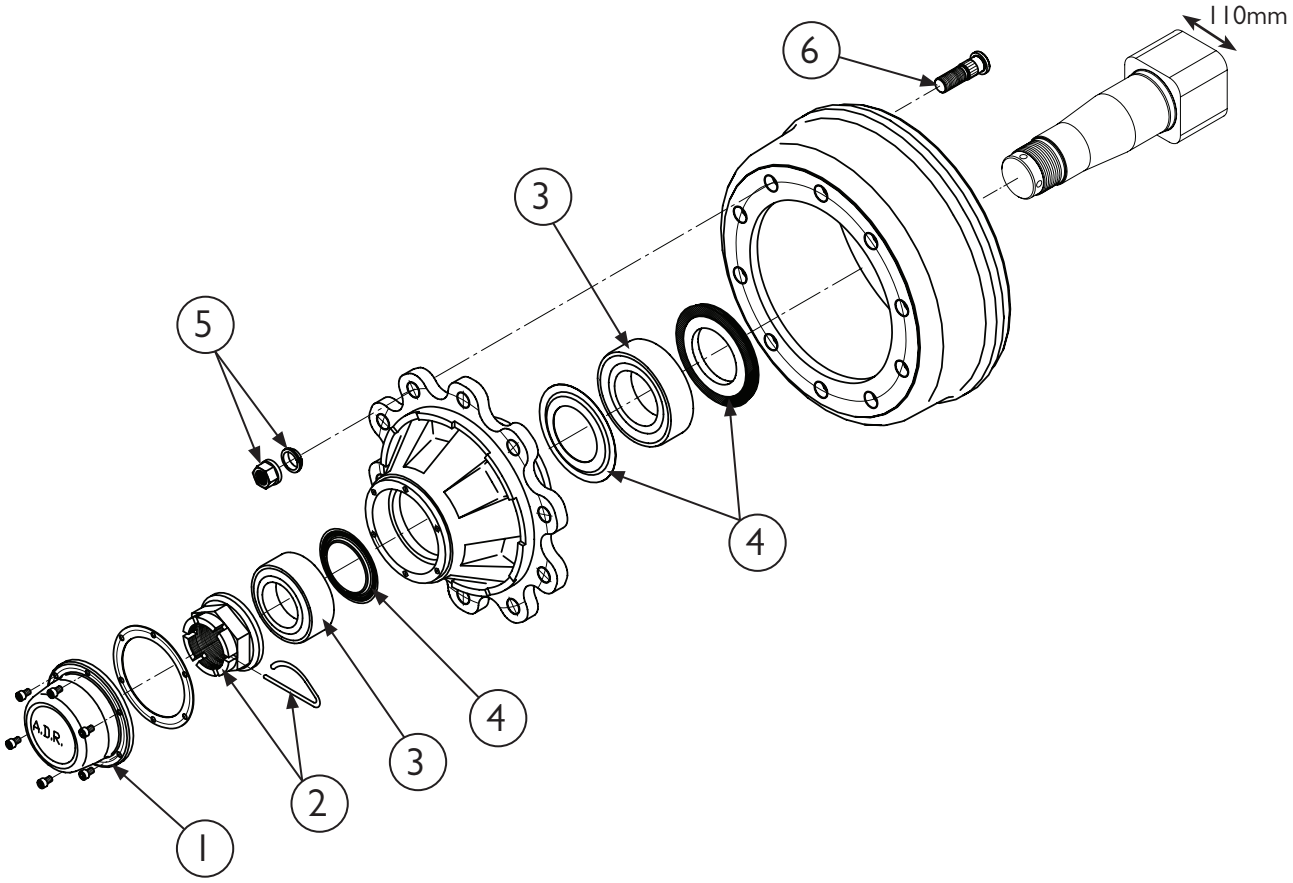

Old series Hub No Longer Available. Refer to New Seris Hub Part Numbers for complete replacement

ITEM NO.	PART NUMBER	DESCRIPTION	QTY.
-	GA5018121	Stub axle, 110 Series, LH, Braked, ADR (New Series)	-
-	GA5018120	Stub axle, 110 Series, RH, Braked, ADR (New Series)	-
1	GA5052145	Cap kit, 110 Series, ADR	1
2	GA5052140	Crown nut kit, 110 Series, ADR	1
3	GA5052135	Bearing kit, 110 Series, Braked, ADR	1
4	GA5052130	Seal kit, 110 Series, Braked, ADR	1
5	GA5052165	Wheel nut kit, Suit 90 / 110 series stub axle, ADR (set of 10)	1
6	GA5052125	Stud kit, 110 Series, Braked, ADR	1

Chapter 13

BOOM CENTRE

Paralift & Paralift Arms

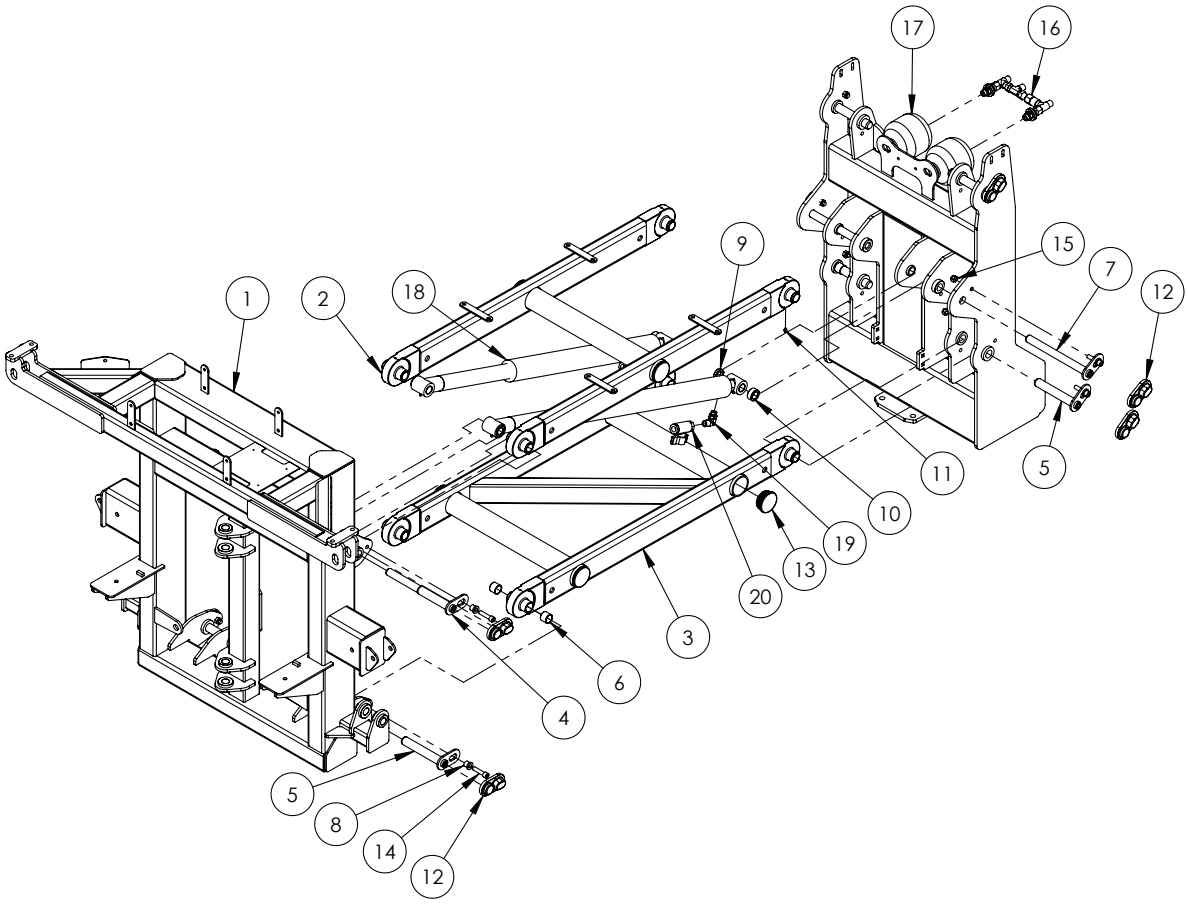

ITEM NO.	PART NUMBER	DESCRIPTION	QTY.
1	GA4658135	Paralift Rear	1
2	GA4659305	Top Paralift Arm MY12	1
3	GA4659310	Bottom Paralift Arm MY12	1
4	GA5066675	Pin paralift rear ram and arm	2
5	GA5066655	Pin paralift chassis arm	6
6	GA5065486	Glacier bush 1 1/8" x 1" long	16
7	GA5066645	Pin with retaining plate, 1" x 280mm long, Paralift chassis ram	2
8	MACH0152	12mm Bolt Bush suit para lift pins	10
9	GA4572135	Paralift spacer bush	4
10	GA4562190	Spacer bush, 40 OD x 26 ID x 17.5mm long, Paralift arms	2

Continued over page

Paralift & Paralift Arms

ITEM NO.	PART NUMBER	DESCRIPTION	QTY.
11	GA5050450	Grease nipple 6mm	8
12	GA5067885	Pin cover - plastic	10
13	GA5050355	End cap, 76.1 mm round, suit 65 NB pipe, Black plastic	6
14	GA5051470	SHCS M12 x 50	10
15	GA5012461	Nut M12 Nyloc ZP	11
16	GA4903058	Hydraulic Accumulator Manifold	1
17	GA5007787	Accumulator 1.0L Precharge 70 Ba	2
18	GA5070082	Hydraulic cylinder - 2.5" bore, 2" rod, 21" Stroke	2
	GA5070079	Hydraulic cylinder - 3” bore, 2.5” rod, 21” Stroke - 36m Boom	
19	GA3500349	Hydraulic adaptor, Elbow, 90 degree, 1/2” BSPT male x 3/4” UN male O-ring	2
20	GA5000835	Valve, Ball, Hydraulic, 1/2” female thread inlet / outlet	2

Boom Centre & Paralift

Note: Single roll shocker assembly shown. See section 'Double Roll Shocker Assembly' for dual version.

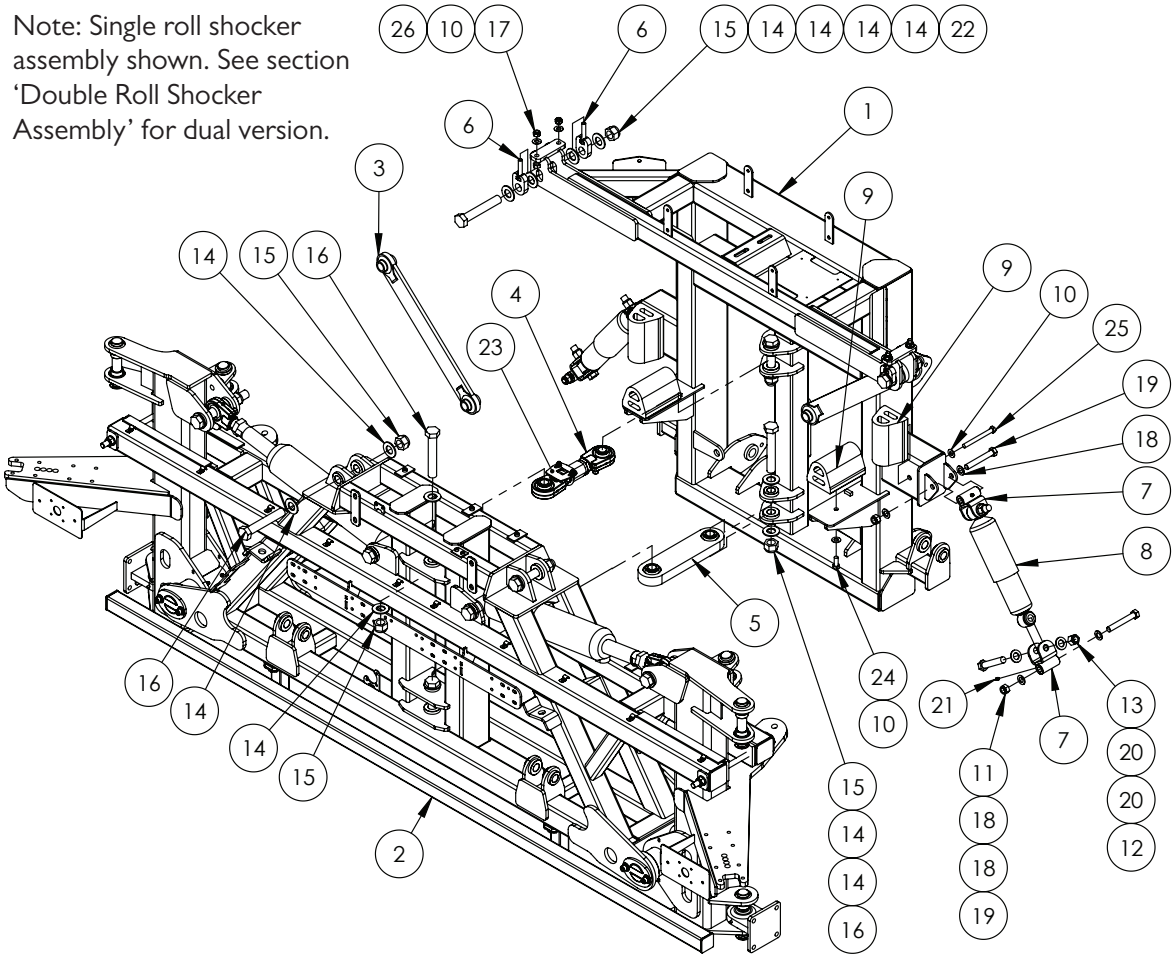

ITEM NO.	PART NUMBER	DESCRIPTION	QTY.
1	GA4658135	Paralift Rear	1
2	GA4922195	Boom centre, Base assembly	1
3	GA4656240	Delta link, Long	2
4	DELTA-LINKSA	Delta link, short, heavy duty, adjustable	1
5	GA5067855	Delta link, short, heavy duty	1
6	GA4656260	Adjuster bolt, Delta link hanger	4
7	GA4658140	Mounting bracket, Single roll shock absorber, TriTech centre	4
8	GA5015139	Shock Absorber, Double eye, 19mm eye, 82mm OD, Black	2
9	GA5075240	Bump Stop Rubber with threaded insert	4
10	GA5000577	Washer 12mm Flat SS HD	8
11	GA5001029	Nut M16 Nyloc ZP	4
12	GA5049490	Bolt 3/4" UNC x 4" ZP GR8	4
13	GA5048430	Nut, Nyloc, 3/4" UNC, ZP	4
14	GA5017681	Washer 1" x 2" 7g Flat Thin SS	16
15	GA5012446	Nut 1" UNF 12 TPI Nyloc ZP	8
16	GA5006043	Bolt 1" UNF 14 TPI x 6" ZP GR8	6
17	GA5012461	Nut M12 Nyloc ZP	4

Continued over page

Boom Centre & Paralift

ITEM NO.	PART NUMBER	DESCRIPTION	QTY.
18	GA5001043	Washer 16mm Flat SS HD	8
19	GA5000855	Bolt M16 x 110 ZP GR8.8	4
20	GA5001741	Washer 20mm Flat SS HD	8
21	GA5012203	Grease nipple, Short, 1/4" UNF	4
22	GA4683145	Bolt, 1" UNC x 6" (cut down from 7")	2
23	*	Adjustable delta link lock up assembly (delta link not included)	1
24	GA5000305	Set Screw M12 x 30 ZP GR8.8	2
25	GA5000265	Bolt M12 x 120 ZP GR8.8	2
26	GA5000559	Nut M12 Hex ZP	4

* Sub-assembly on following pages

FOLD RAM MOUNT SHIMS

PART NUMBER	DESCRIPTION
GA4513041	Shim, TriTech Fold ram, 20mm, Suit 4 bolt

BOOM PIVOT SHIM

PART NUMBER	DESCRIPTION
GA4535360	Shim, 5mm, Delta boom rose joint
GA4535355	Shim, 3mm, Delta boom rose joint
GA4535285	Shim, 1mm, Lower rose end, Delta boom

Boom Centre Assembly

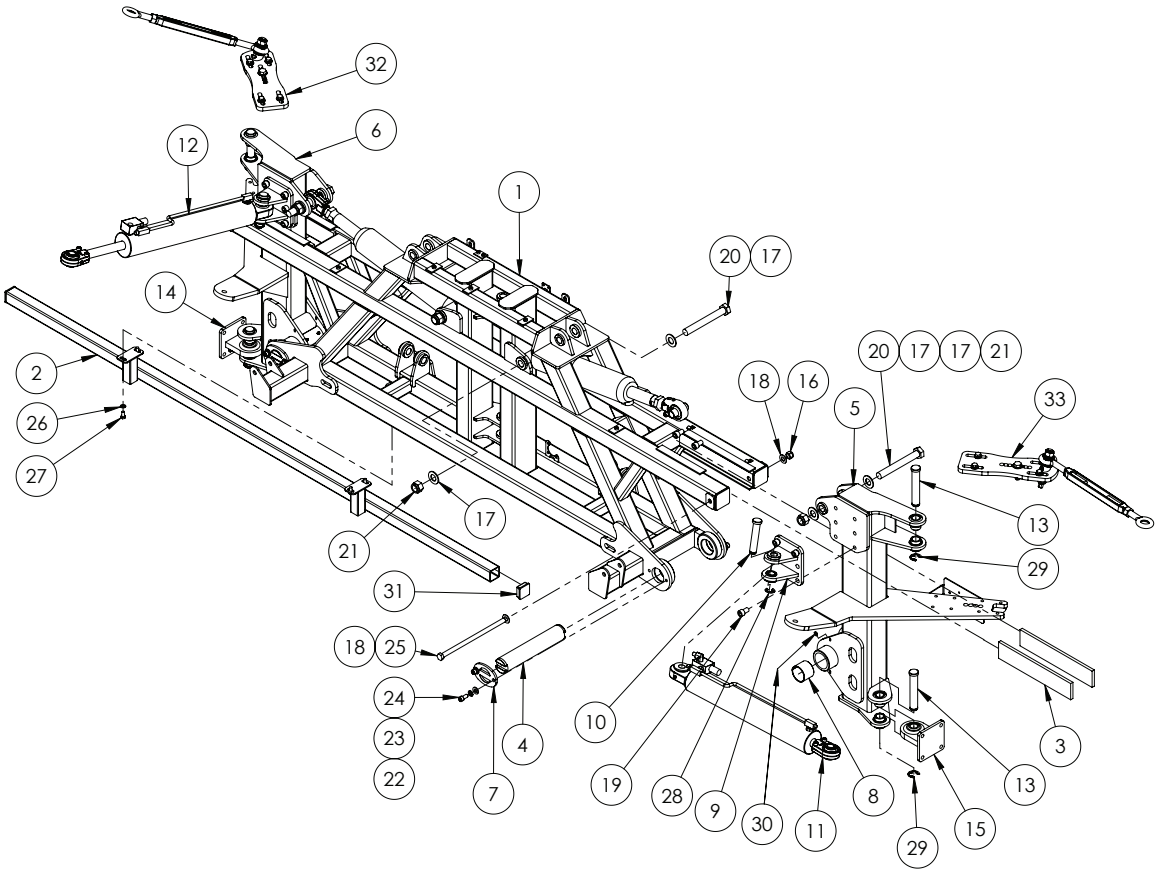

ITEM NO.	PART NUMBER	DESCRIPTION	QTY.
1	GA4658120	Centre Section, Tritech, MY11 on	1
2	GA4658145	Spray bar, suit 2011 center section	1
3	GA5075090	Wear pad, 380 x 74 x 12mm, Polystone	4
4	GA4572365	Tilt pin, suit MY11 centre section	2
5	GA4658130	Tilt arm, suit 2011 center Left hand	1
6	GA4658125	Tilt arm, suit 2011 center Right hand	1
7	GA4502280	Pin retainer	4
8	GA5075060	Glacier bush 60mm ID 50mm long	4
9	GA4653316	Boom centre, 2011 24m fold ram mount 1" inch	2
10	GA4572200	Pin, 1" diameter x 132.4mm long, With shoulder and circlip groove	2
11	GA5018542	Hydraulic Cylinder, 3 1/4" bore x 1 1/4" rod x 18" stroke, external phasing	1
12	GA5018540	Hydraulic cylinder, 3" bore x 1 1/4" rod x 18" stroke (with external phasing valve)	1
13	L003A	Pin, 1 1/8" x 170mm, with circlip groove	4
14	GA4656200	Rose end, Bolt on, RH, Suit 24 - 36m boom	1
15	GA4656201	Rose end, Bolt on, LH, Suit 24 - 36m boom	1
16	GA5001029	Nut M16 Nyloc ZP	2

Continued over page

Boom Centre Assembly

ITEM NO.	PART NUMBER	DESCRIPTION	QTY.
17	GA5017681	Washer 1" x 2" 7g Flat Thin SS	8
18	GA5001043	Washer 16mm Flat SS HD	4
19	GA5000905	SHCS M16 x 25 ZP GR8.8	12
20	GA5006151	Bolt 1" UNF x 8", 12 TPI ZP GR8	4
21	GA5012446	Nut 1" UNF 12 tpi Nyloc ZP	4
22	GA5000577	Washer 12mm Flat SS HD	8
23	GA5000575	Washer 12mm Spring SS	8
24	GA5000297	SHCS M12 x 25 ZP GR12.9	8
25	GA5075125	Bolt M16 x 325, 60 mm of thread, GR4.4 ZP	2
26	GA5000117	Washer 10mm Flat SS HD	4
27	GA5006113	Bolt M10 x 20 ZP GR8.8	4
28	GA5001223	Circlip, 19mm, E type, zinc plated	2
29	GA5001883	Circlip, E type, 24mm, Zinc plated	4
30	GA5012203	Grease nipple, Short, 1/4" UNF	4
31	GA5003783	End cap, Insert, Black, Plastic, 50 x 50 mm	2
32	*	Cable Mount - Rear LH - 24-36m	1
33	*	Cable Mount - Rear RH - 24-36m	1

* Sub-assembly on following pages

Boom Centre Tilt Links

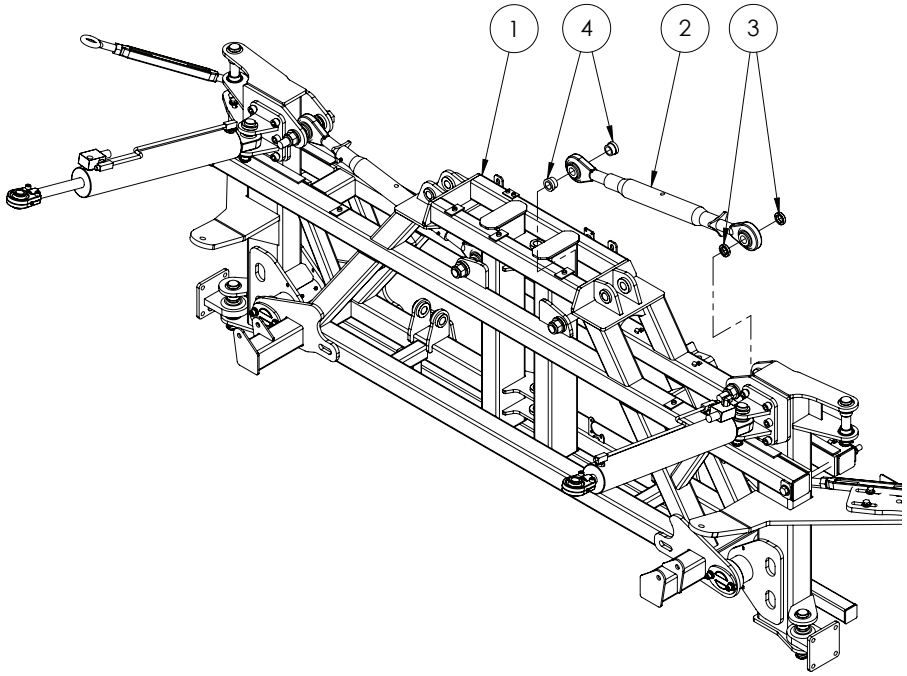

ITEM NO.	PART NUMBER	DESCRIPTION	QTY.
1	GA4922195	Boom centre 2011 Base assembly	1
2	GA5075135	Tilt cylinder replacement adjustable top link (black)	2
3	GA4572135	Spacer bush, 40 OD x 25.8 ID x 9mm thick, Paralift arm spacer	4
4	DB-ADJ-02	Bush, Short, 40 OD x 25.5 ID x 23.75mm long	4

Boom Centre Tilt Cylinders

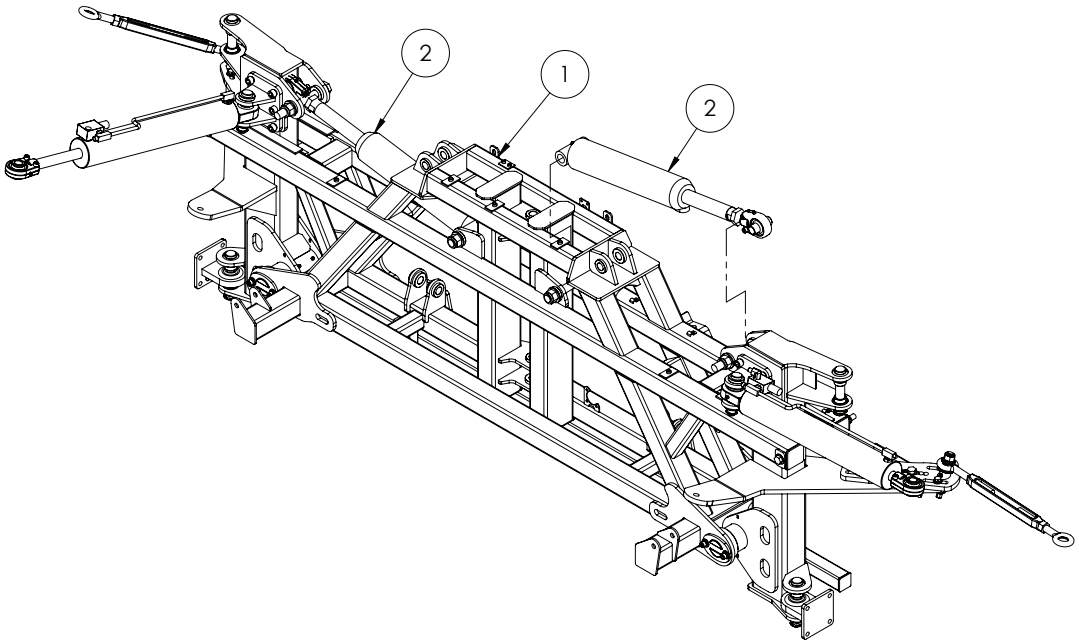

ITEM NO.	PART NUMBER	DESCRIPTION	QTY.
1	GA4922195	Boom centre 2011 Base assembly	1
2	GA5065051	Hydraulic cylinder, 3.5" OD x 1.75" rod x 5" stroke	2

Cable Mount - Rear LH

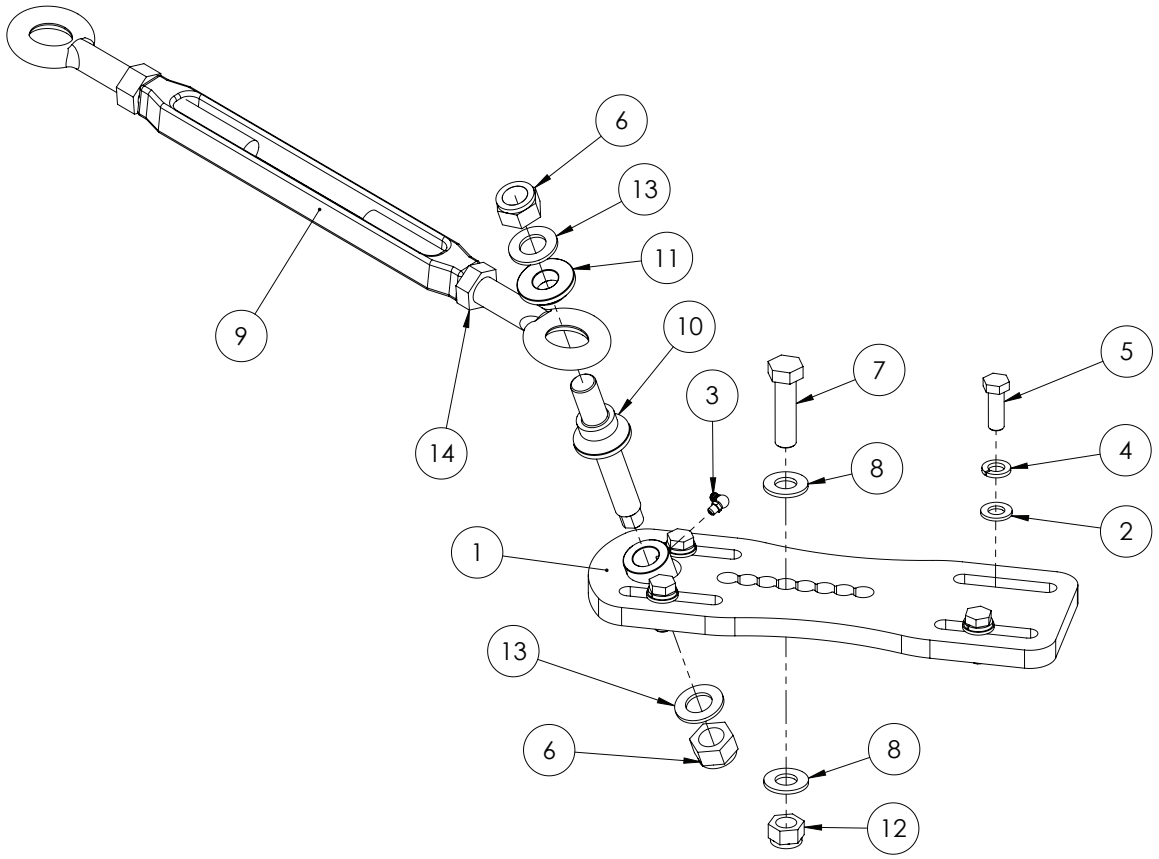

ITEM NO.	PART NUMBER	DESCRIPTION	QTY.
1	GA4656255	Slide plate, Boom cable adjuster, Left side, Prairie Tritech boom	1
2	GA5000577	Washer 12mm Flat SS HD	4
3	GA5009637	Grease Nipple 1/4" UNF 90 deg	1
4	GA5000575	Washer 12mm Spring SS	4
5	GA5000311	Set Screw M12 x 35 GR 8.8 ZP	4
6	GA5048125	Nut M20 Nyloc Coarse ZP	2
7	GA5000941	Bolt M16 x 60 GR8.8 ZP	1
8	GA5001043	Washer 16mm Flat SS HD	2
9	GA5017061	Turnbuckle, Eye ends, M22 thread & lock nut, Galvanised	1
10	GA4572510	Pivot pin, Boom cable MY13	1
11	GA4572515	Boom cable retainer, Pivot pin MY13	1
12	GA5001029	Nut M16 Nyloc ZP	1
13	GA5001741	Washer 20mm Flat SS HD	2
14	GA5070430	Nut M22 Lock Nut ZP LH Thread	1

Cable Mount - Rear RH

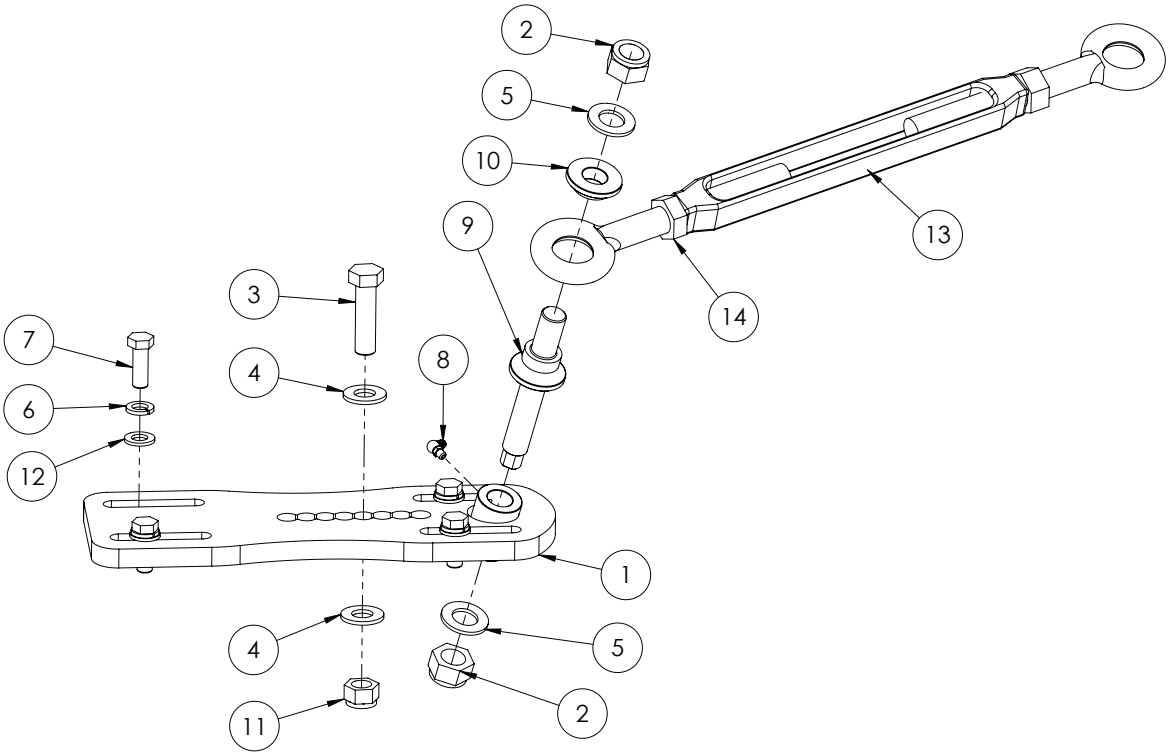

ITEM NO.	PART NUMBER	DESCRIPTION	QTY.
1	GA4656250	Slide plate, Boom cable adjuster, Right side, Prairie Tritech boom	1
2	GA5048125	Nut M20 Nyloc Coarse ZP	2
3	GA5000941	Bolt M16 x 60 GR8.8 ZP	1
4	GA5001043	Washer 16mm Flat SS HD	2
5	GA5001741	Washer 20mm Flat SS HD	2
6	GA5000575	Washer 12mm Spring SS	4
7	GA5000311	Set Screw M12 x 35 GR 8.8 ZP	4
8	GA5009637	Grease Nipple 1/4" UNF 90 deg	1
9	GA4572510	Boom cable pivot pin MY13	1
10	GA4572515	Boom cable pivot pin retainer MY13	1
11	GA5001029	Nut M16 Nyloc ZP	1
12	GA5000577	Washer 12mm Flat SS HD	4
13	GA5017061	Turnbuckle, Eye ends, M22 thread & lock nut, Galvanised	1
14	GA5070430	Nut M22 Lock Nut ZP LH Thread	1

Delta Link Locking Plate

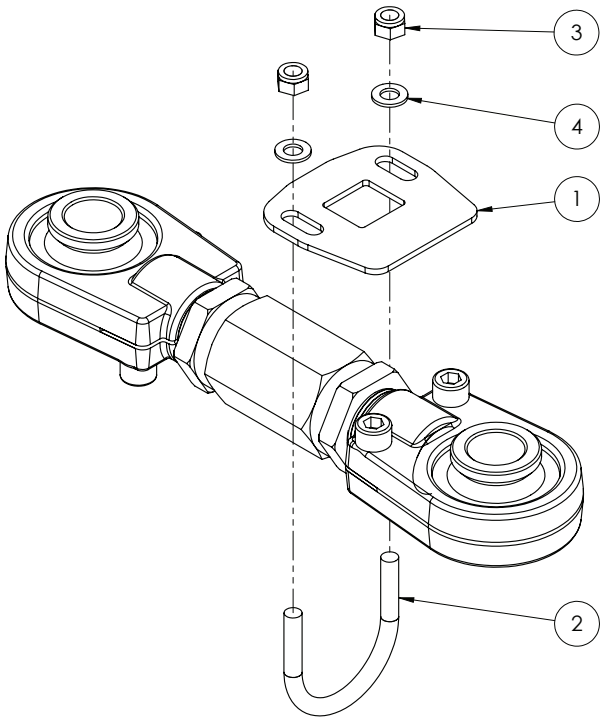

ITEM NO.	PART NUMBER	DESCRIPTION	QTY.
1	GA4524140	Locking plate suit adjustable delta link SS	1
2	GA5018245	U bolt, Round top, M8 x 50 x 60mm	1
3	GA5052590	Nut M8 Nyloc SS	2
4	GA5003643	Washer 8mm Flat SS HD	2

Double Roll Shocker Assembly

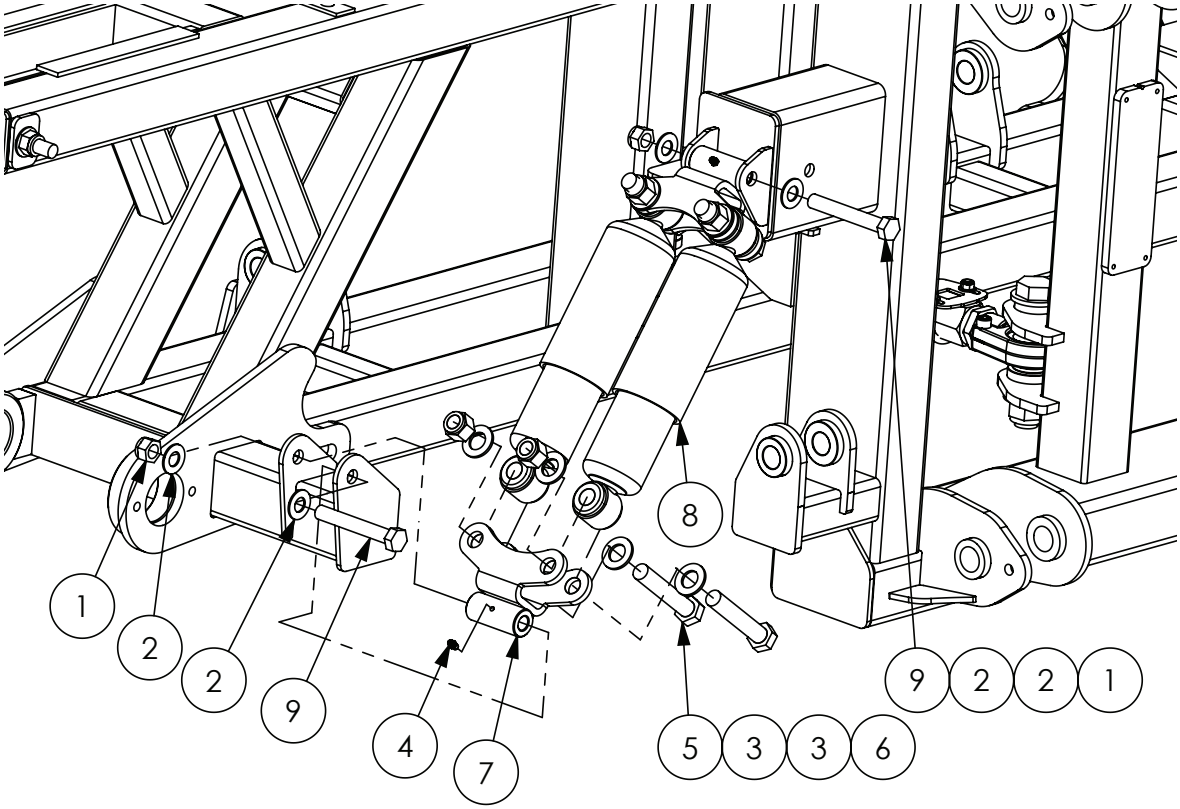

ITEM NO.	PART NUMBER	DESCRIPTION	QTY.
1	GA5001029	Nut M16 Nyloc ZP	4
2	GA5001043	Washer 16mm Flat SS HD	8
3	GA5001741	Washer 20mm Flat SS HD	16
4	GA5012203	Grease nipple, Short, 1/4" UNF	4
5	GA5049490	Bolt 3/4" UNC x 4" ZP GR8	8
6	GA5048430	Nut, Nyloc, 3/4" UNC, ZP	8
7	GA4659360	Mounting bracket, Dual roll shock absorber	4
8	GA5015139	Shock Absorber, Double eye, 19mm eye, 82mm OD, Black	4
9	GA5000855	Bolt M16 x 110 ZP GR8.8	4

Yaw Kit - Spring

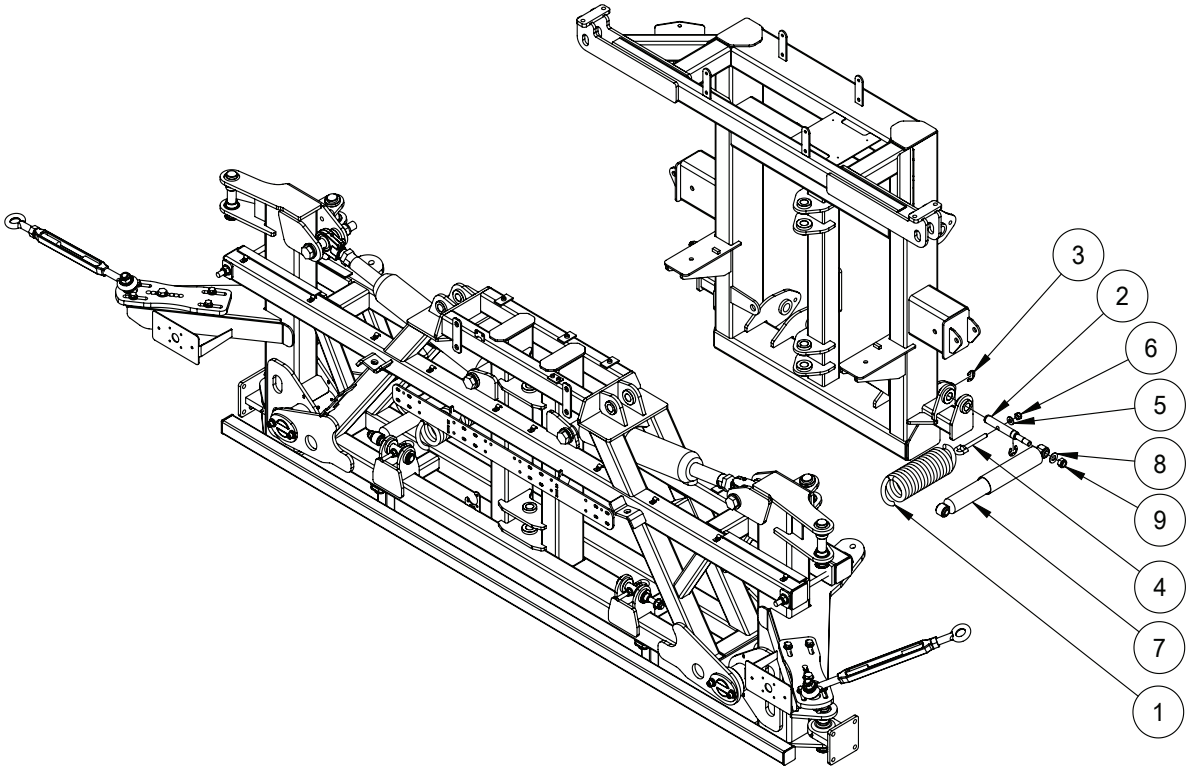

ITEM NO.	PART NUMBER	DESCRIPTION	QTY.
1	GA5075095	Spring, Tension, 95 OD x 330 long x 14mm	2
2	GA4572385	Pin, 25 OD x 195.6mm long	4
3	GA5001223	Circlip, 19mm, E type, zinc plated	8
4	GA5075150	Eye Bolt 12mm x 100mm Short	4
5	GA5000577	Washer 12mm Flat SS HD	4
6	GA5012461	Nut M12 Nyloc ZP	4
7	GA5075115	Shock absorber, Heavy duty, Eye ends 15mm ID	2
8	GA5001043	Washer 16mm Flat SS HD	4
9	GA5001029	Nut M16 Nyloc ZP	4

Yaw Kit - Hydraulic

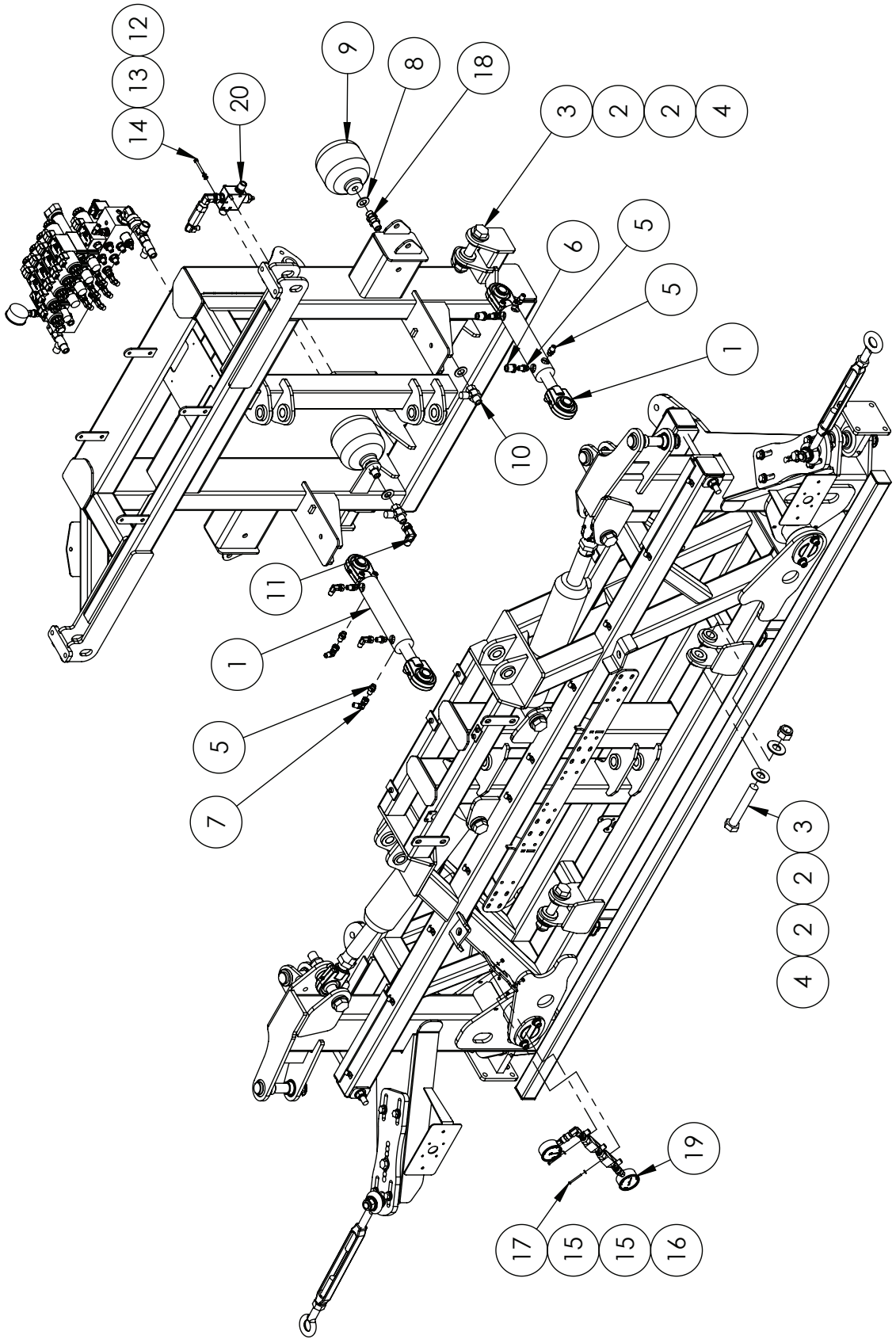

Continued over page

Yaw Kit - Hydraulic

ITEM NO.	PART NUMBER	DESCRIPTION	QTY.
1	GA5060817^	Hydraulic cylinder, 2” bore x 1 1/4” rod x 117.5mm stroke, Spherical bearing ends	2
2	GA5017659	Washer, 1”, Flat, ZP, Heavy duty (5mm thick)	8
3	GA5006043	Bolt 1” UNF 14 TPI x 6” ZP GR8	4
4	GA5012446	Nut 1” UNF 12 tpi Nyloc ZP	4
5	GA3500358	Hydraulic adaptor, Nipple, 1/4” BSPT male x 9/16” UN male O-ring	8
6	GA3500203	Hydraulic adaptor, Reducing bush, 1/2" BSPT male x 1/4" BSPT female	2
7	GA3500332	Hydraulic adaptor, Elbow, 90 degree, 1/4” BSPT male x 1/4” BSPP female swivel	4
8	GA5001741	Washer 20mm Flat SS HD	4
9	GA5007787	Accumulator, Hydraulic, 1L, precharged to 70 bar	2
10	GA3500198	Hydraulic adaptor, Inline test point, 1/2” BSPP female swivel x 1/2” BSPT male x M16 x 2.0 test port	2
11	GA3500333	Hydraulic adaptor, Elbow, 90 degree, 1/2" BSPT male x 1/2" BSPP female swivel	1
12	GA5004437	Washer 6mm Flat SS	2
13	GA5004447	Washer 6mm, Spring, SS	2
14	GA5011419	Bolt M6 x 50 SS	2
15	GA5020510	Washer 4mm Flat SS	4
16	GA5049025	Nut M4 Nyloc SS	2
17	GA5049800	SHCS M4 x 40 ZP GR12.9	2
18	GAS99-603	Hydraulic adaptor, Bulkhead nipple, 1/2” BSP male x 1/2” BSP male	2
19	^	Yaw Control Valve Assembly	1
20	^	Pressure Reducer Valve Assembly	1

^ See Chapter 18 ‘Hydraulics’ for sub-assembly.

Centre Level

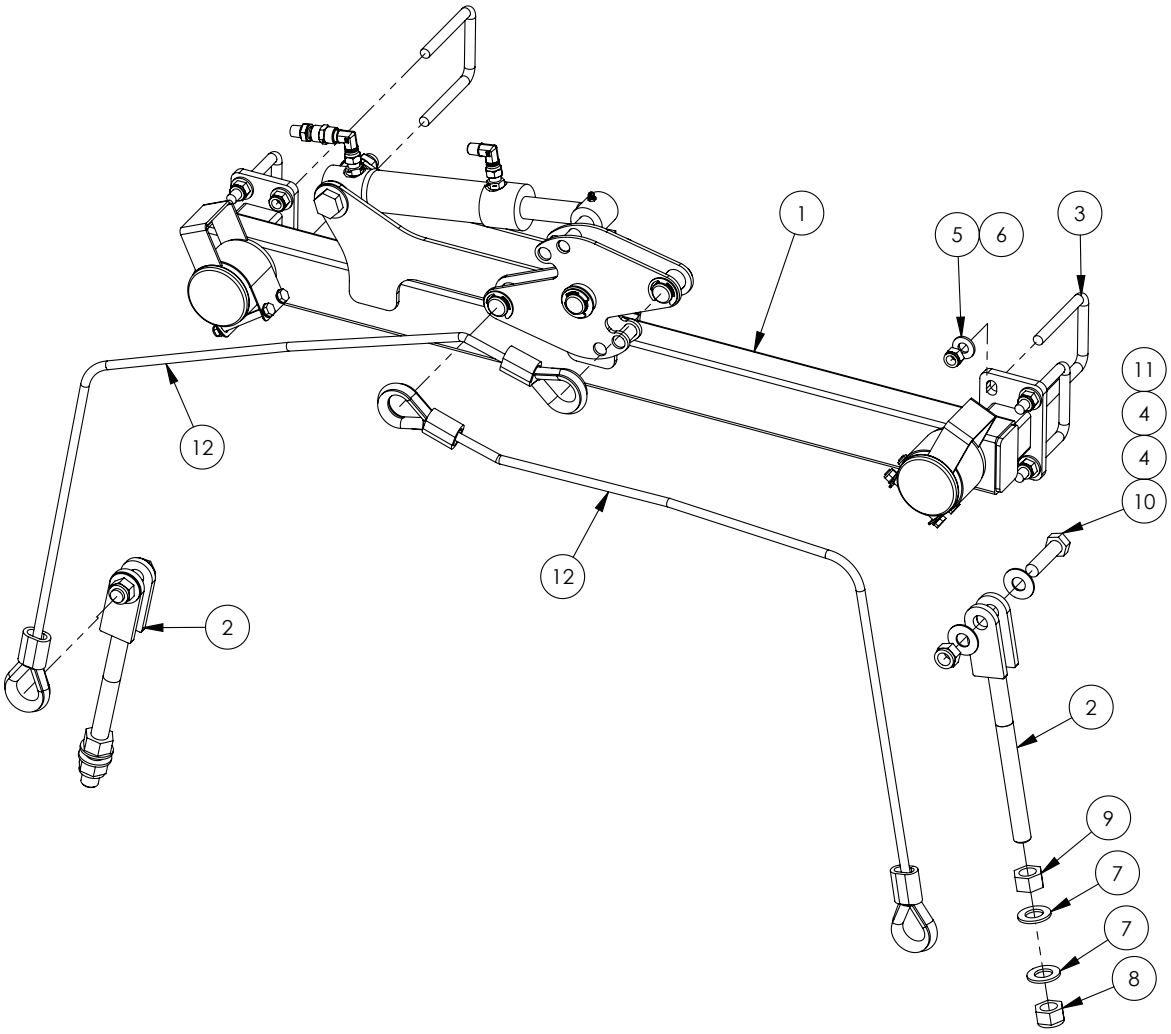

ITEM NO.	PART NUMBER	DESCRIPTION	QTY.
1	*	Centre level - Main Pivot	1
2	GA5020320	Cable Adjuster 20mm Threaded	2
3	GA5011259	U Bolt, Square top, M12 x 76mm x 110mm	4
4	GA5001043	Washer 16mm Flat SS HD	4
5	GA5000577	Washer 12mm Flat SS HD	8
6	GA5012461	Nut M12 Nyloc ZP	8
7	GA5001741	Washer 20mm Flat SS HD	4
8	GA5048125	Nut M20 Nyloc Coarse ZP	2
9	GA5001709	Nut M20 Coarse Hex ZP	2
10	GA5000939	Bolt M16 x 60 Black GR8.8	2
11	GA5001029	Nut M16 Nyloc ZP	2
12	GA4905185	Cable assembly, Suit boom centre lock kit	1

* Sub-assembly on following pages

Centre Level - Pivot Assembly

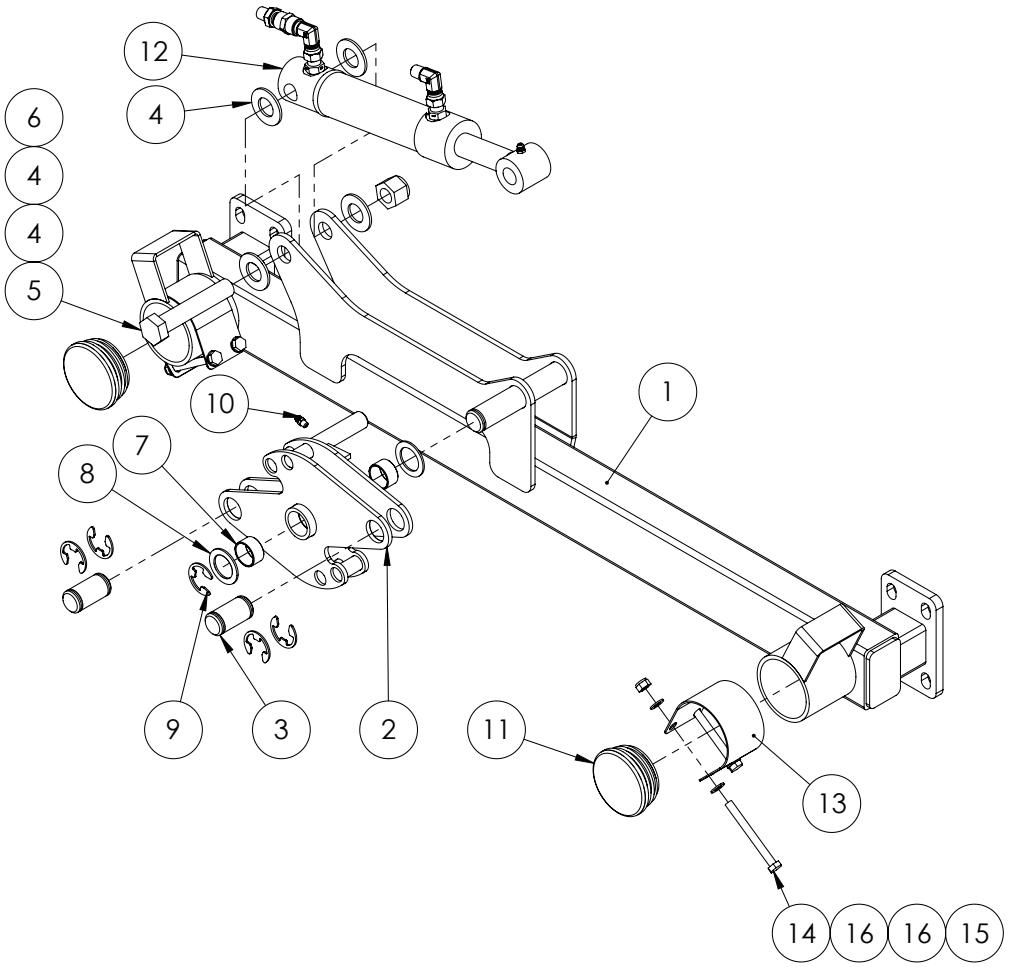

ITEM NO.	PART NUMBER	DESCRIPTION	QTY.
1	GA4658142	Centre leveling main pivot assembly	1
2	GA4658141	Centre levelling wheel assembly	1
3	GA4572420	Pin, Suit centre levelling cable mount, 25 OD x 49mm long with circlip grooves each end	2
4	GA5001045	Washer, 3/4", Flat ZP	4
5	GA5049490	Bolt 3/4" UNC x 4" ZP GR8	1
6	GA5048430	Nut, Nyloc, 3/4" UNC, ZP	1
7	GA5009463	Glacier Bush, ID 25 x 15mm long	2
8	GA4522315	Washer, 27 ID x 40 OD x 2mm thick, SS	2
9	GA5001223	Circlip, 19mm, E type, zinc plated	5
10	GA5012203	Grease nipple, Short, 1/4" UNF	1
11	GA5050355	End cap, 76.1 mm round, suit 65 NB pipe, Black plastic	2
12	GA4904785-1^	Ram Assembly Center Leveling	1
13	GA4506750	Wear Strip SS for Centre Leveling Cables	2
14	GA5004749	Bolt M8 x 80 ZP GR8.8	4
15	GA5052590	Nut M8 Nyloc SS	4
16	GA5003643	Washer 8mm Flat SS HD	8

^ See Chapter 18 'Hydraulics' for sub-assembly.

Lower Limit Switch

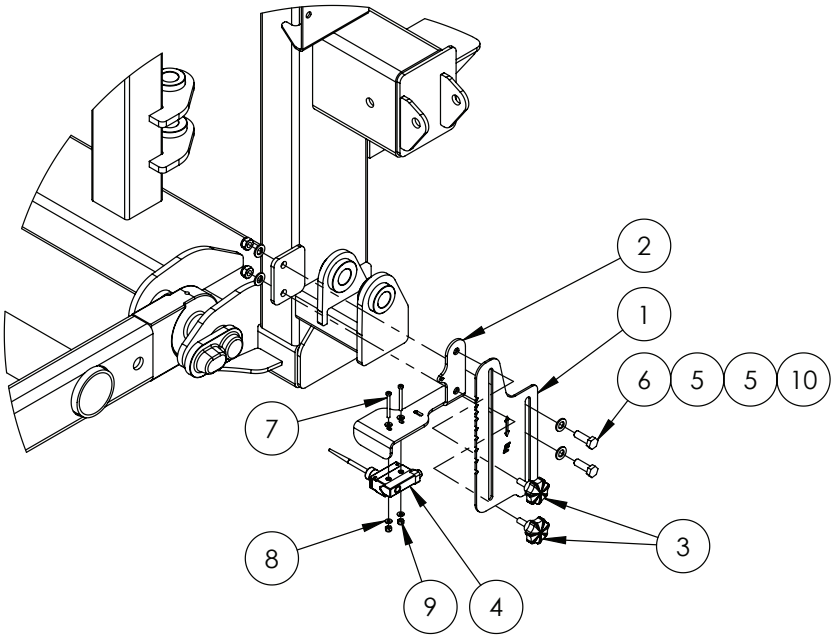

ITEM NO.	PART NUMBER	DESCRIPTION	QTY.
1	GA4523965	Boom Height adjustment bracket	1
2	GA4654161	Paralift switch bracket	1
3	GA5067080	M8 x 20 Plastic Knob Bolt	2
4	GA5012129~	Limit switch, Flexible arm, Micro, IP65, 10 Amp	1
5	GA5000117	Washer 10mm Flat SS HD	4
6	GA5065455	Bolt M10 x 30 GR8.8 ZP	2
7	GA5049800	SHCS M4 x 40 GR12.9 ZP	2
8	GA5020510	Washer 4mm Flat SS	4
9	GA5049025	Nut M4 Nyloc SS	2
10	GA5000141	Nut M10 Nyloc ZP	2

~ Note: Nuts, bolts & washers come included with GA5012129

RapidFire Assembly

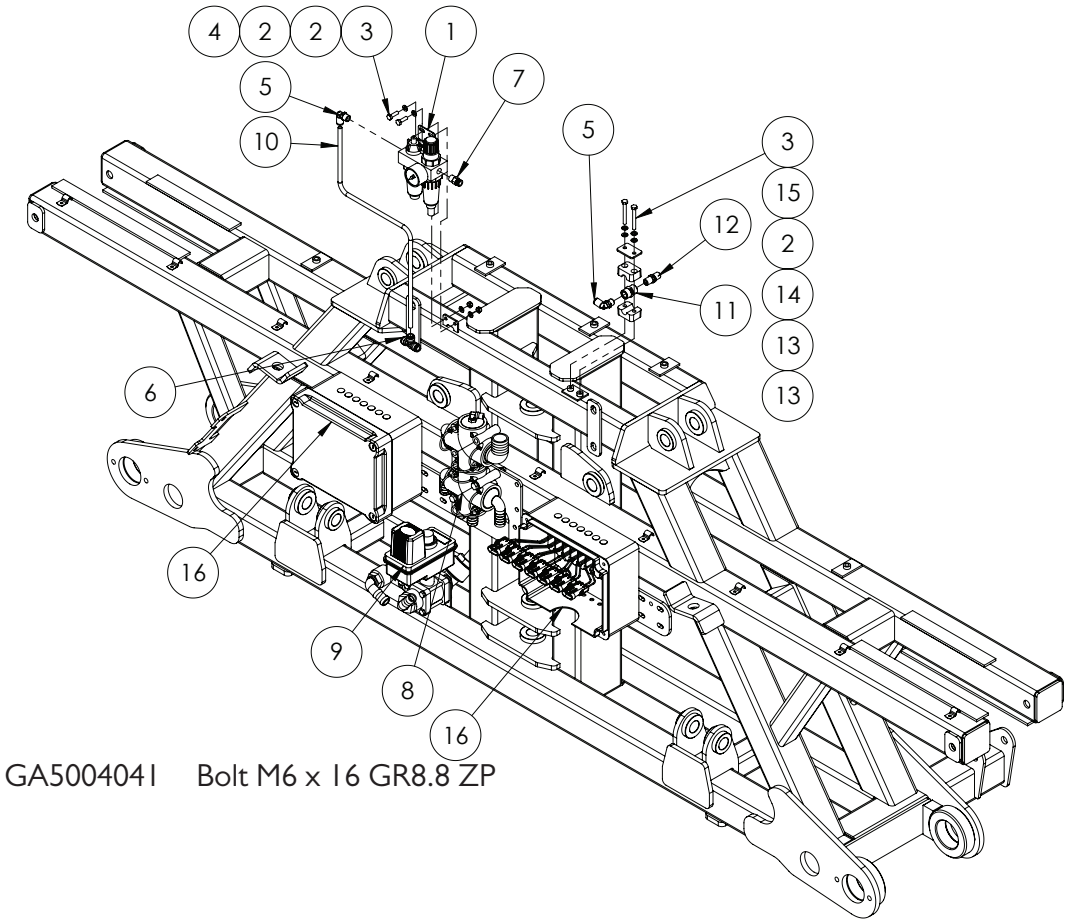

GA5004041 Bolt M6 x 16 GR8.8 ZP

ITEM NO.	PART NUMBER	DESCRIPTION	QTY.
1	GA5068806	Pneumatic Mini Filter Oiler and Regulator	1
2	GA5004437	Washer 6mm Flat SS	6
3	GA5011419	Bolt M6 x 50	4
4	GA5048115	Nut M6 Nyloc ZP	2
5	GA5052690	Elbow Swivel push in 8mm x 1/4" BSP	2
6	GA5067010	Equal Tee push in 8mm	1
7	GA5052695	Straight adapter push in 8mm x 1/4" BSP	1
8	*	RapidFire Pressure Flow Distributer Raven Assembly	-
	*	RapidFire Pressure Flow Distributer ISO Bus Assembly	
9	*	RapidFire RapidFlow 3 Way Return to Tank Valve Assembly	1
10	GA5004382	Tube, Nylon, 8mm, Black	1
11	GA3500211	Hydraulic adaptor, Socket, 1/4" BSPT female x 1/4" BSPT female	1
12	GA3500218	Hydraulic adaptor, Nipple, 1/4" BSPT male x 1/4" BSPT male	1
13	GA5078058	Mounting Clamp, Single type, Jaw, Pair, Group 3, 14mm	2
14	GA5078068	Mounting Clamp, Single type, Plate, Top, Group 2	1
15	GA5004447	Washer, 6mm, Spring, SS	2
16	*	RapidFire 7 Section Solenoid Box Assembly	-
	*	RapidFire 10 Section Solenoid Box Assembly	

* Sub-assembly on following pages

RapidFire - RapidFlow Return Valve

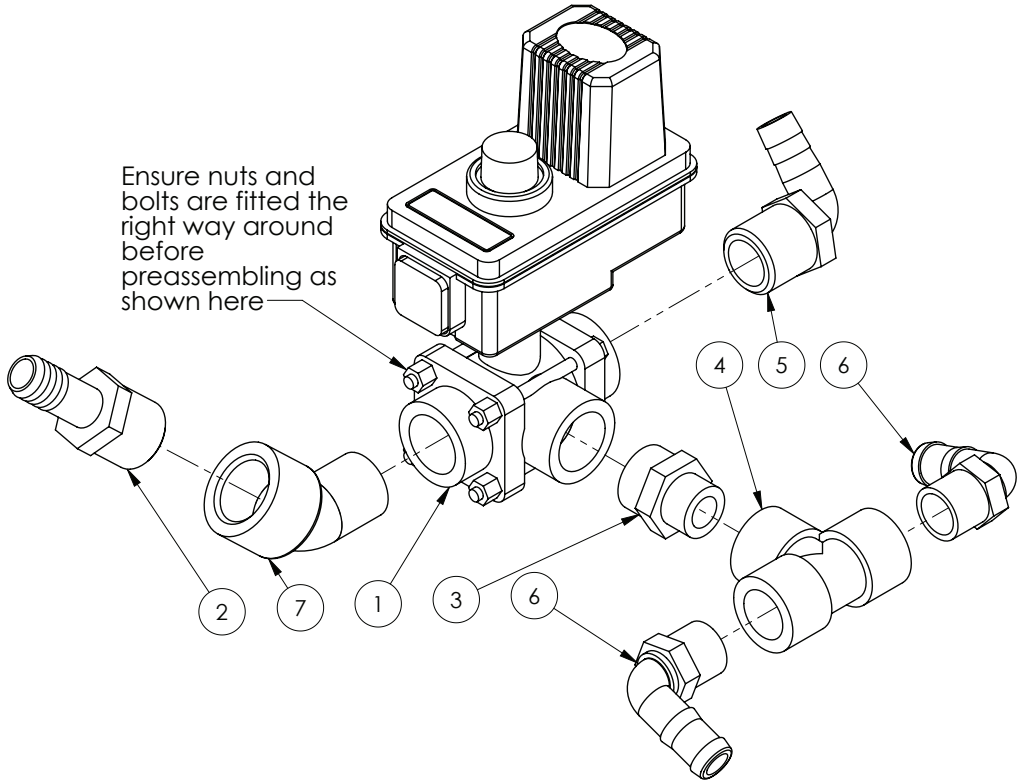

ITEM NO.	PART NUMBER	DESCRIPTION	QTY.
1	GA5077319	Shutoff / Bypass 1" BSPT, 3 way (Yellow indicator)	1
2	GA5077721	Hose barb, Straight, 1" male thread x 3/4" hose, Banjo	1
3	GA5078089	Reducing Nipple, 1" thread x 3/4" thread, Banjo	1
4	GA5078150	Tee, Threaded, 3/4" female, Banjo	1
5	GA5077719	Hose barb, Elbow, 90 degree, 1" male thread x 3/4" hose, Banjo	1
6	GA5077717	Hose barb, Elbow, 90 degree, 3/4" male thread x 3/4" hose, Banjo	2
7	GA5078136	Street elbow, 45 degree, 1" male thread x 1" female thread, Banjo	1

RapidFire - 7 Section Solenoid Box

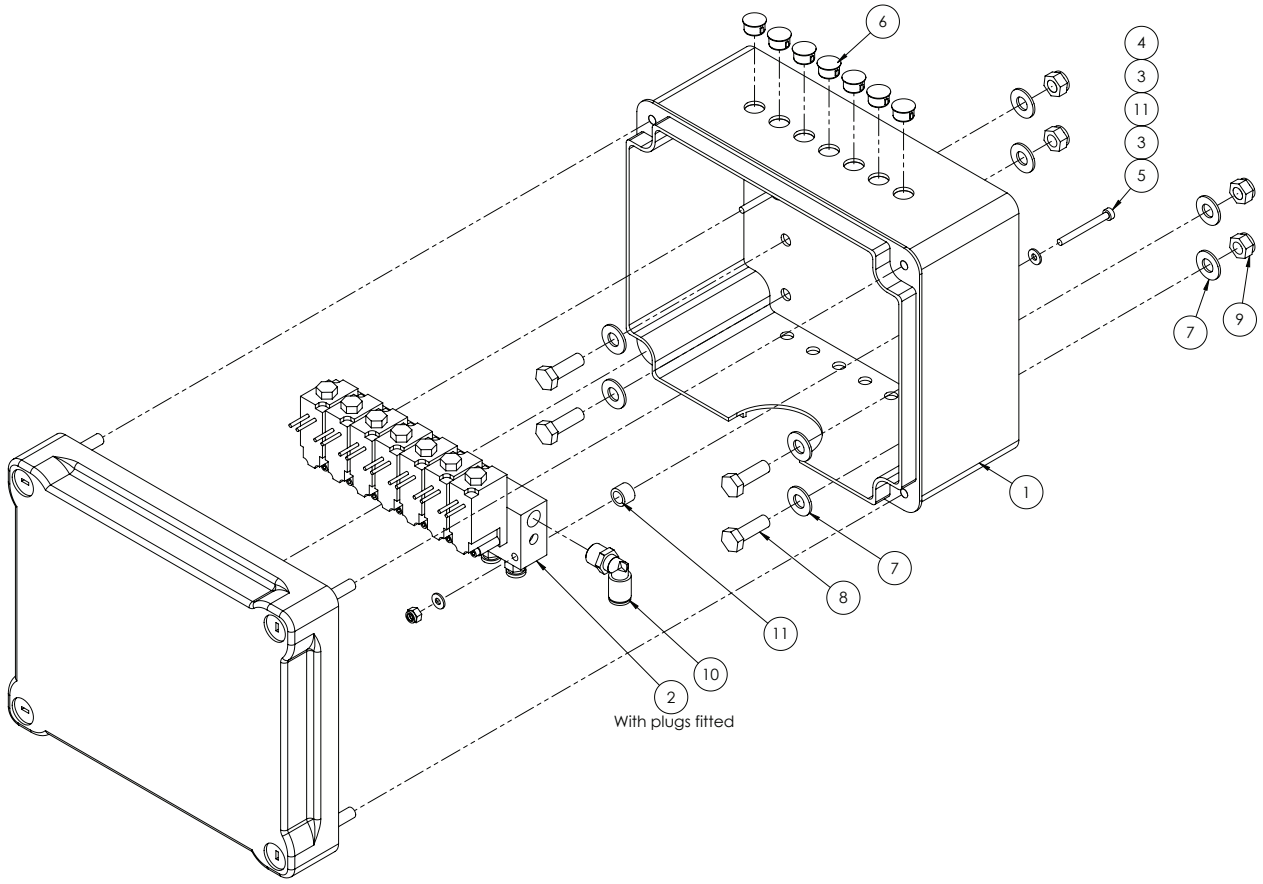

ITEM NO.	PART NUMBER	DESCRIPTION	QTY.
1	GA5054085	Box plastic electrical 241 x 194 x 127mm	1
2	GA5068807*	Valve, pneumatic MAC solenoid 7 section bank, suit rapid fire, 6mm outlets, 8mm inlet with Weatherpak Plugs	1
3	GA5020510	Washer 4mm Flat SS	4
4	GA5049025	Nut M4 Nyloc SS	2
5	GA5049800	SHCS M4 x 40 ZP GR12.9	2
6	GA5048780	Dome plug 12mm	7
7	GA5003643	Washer 8mm Flat SS HD	8
8	GA5004711	Bolt M8 x 25 ZP GR8.8	4
9	GA5052590	Nut M8 Nyloc SS	4
10	GA5052690	Elbow Swivel push in 8mm x 1/4" BSP	1
11	GA4572280	Crush tube, 11.8 OD x 8 ID x 8.5mm long	2

* Sub-assembly on following pages

RapidFire - 10 Section Solenoid Box

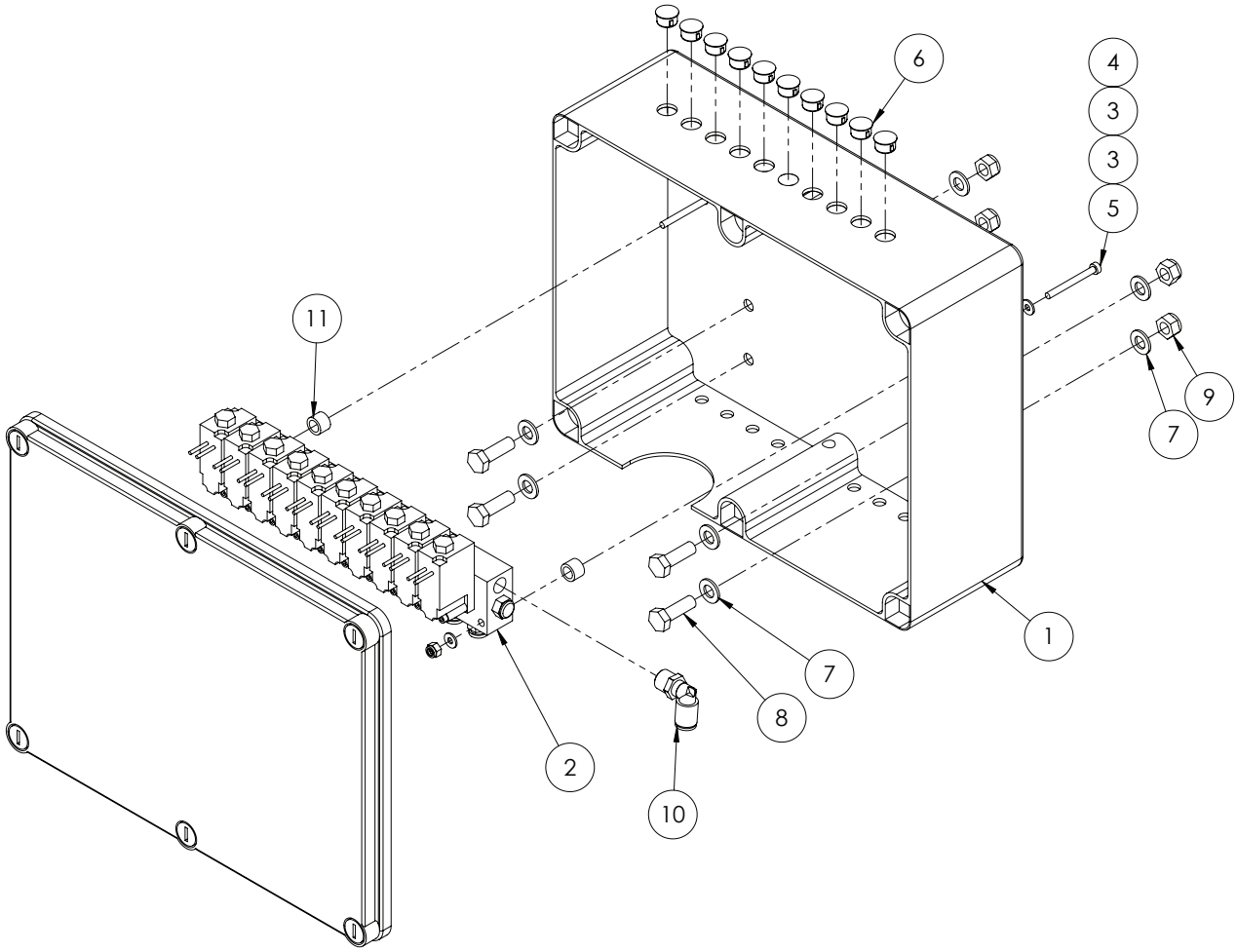

ITEM NO.	PART NUMBER	DESCRIPTION	QTY.
1	GA5054090	Box plastic electrical 310 x 240 x 110mm	1
2	GA5070630*	Pneumatic solenoid bank 10 section, bare wires, 6mm outlets, 8mm inlet	1
3	GA5020510	Washer 4mm Flat SS	4
4	GA5049025	Nut M4 Nyloc SS	2
5	GA5049800	SHCS M4 x 40 ZP GR12.9	2
6	GA5048780	Dome plug 12mm	7
7	GA5003643	Washer 8mm Flat SS HD	8
8	GA5004711	Bolt M8 x 25 ZP GR8.8	4
9	GA5052590	Nut M8 Nyloc SS	4
10	GA5052690	Elbow Swivel push in 8mm x 1/4" BSP	1
11	GA4572280	Crush tube, 11.8 OD x 8 ID x 8.5mm long	2

* Sub-assembly on following pages

RapidFire - Solenoid Valves

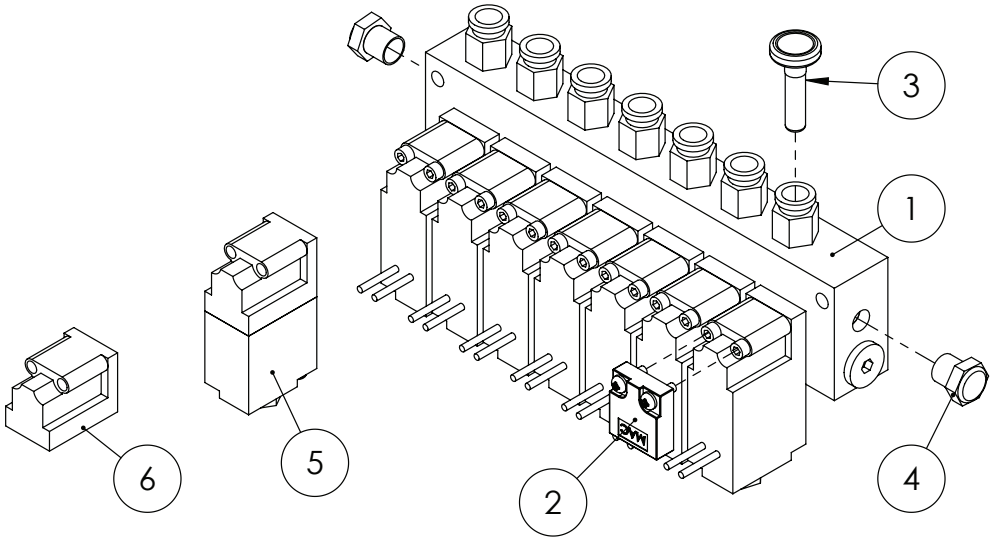

ITEM NO.	PART NUMBER	DESCRIPTION	QTY.
1	GA5068805	Valve, Pneumatic solenoid, 7 section bank, Suit rapid fire, bare wires, 6mm outlets, 8mm inlet, MAC	1
2	GA5054440	MAC Blanking Plate Manifold	1
3	GA5004405	Plug, Push in, 6mm	1
4	GA5054435	MAC 1/8" BSP Flat Silencer	2
5	GA5054432	Valve, MAC 35A 3/2 Manifold. Valve 12 VDC 5.4W Viton with Weatherpak 3 Pin Plug	1
6	GA5054431	Valve, MAC 35A replacement valve only no solenoid, includes bolts and viton seal, blue	1

*Note: Quantities vary depending on number of sections optioned.

Solenoid Valve Unit

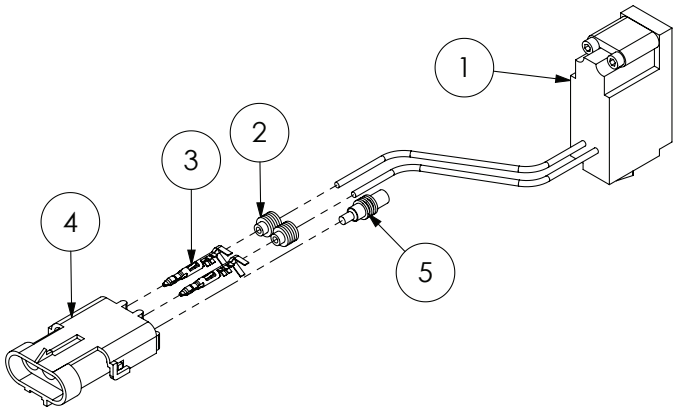

ITEM NO.	PART NUMBER	DESCRIPTION	QTY.
1	GA5054430	Solenoid valve, MAC 3/2 pneumatic, Viton seals, 12V, Bare wires	1
2	GA5014857	Seal, Green, Weather pack connector, Wire from 2.03 - 2.85mm	2
3	GA5016617	Pin, Male, Sealed, Weather pack, Wire 1.0 - 2.0mm	2
4	GA5048550	Connector, Female, 3 Pin, Weather pack	1
5	GA5050245	Seal, Cavity blanking plug, Weather pack connector	1

Remote Manual Grease Station

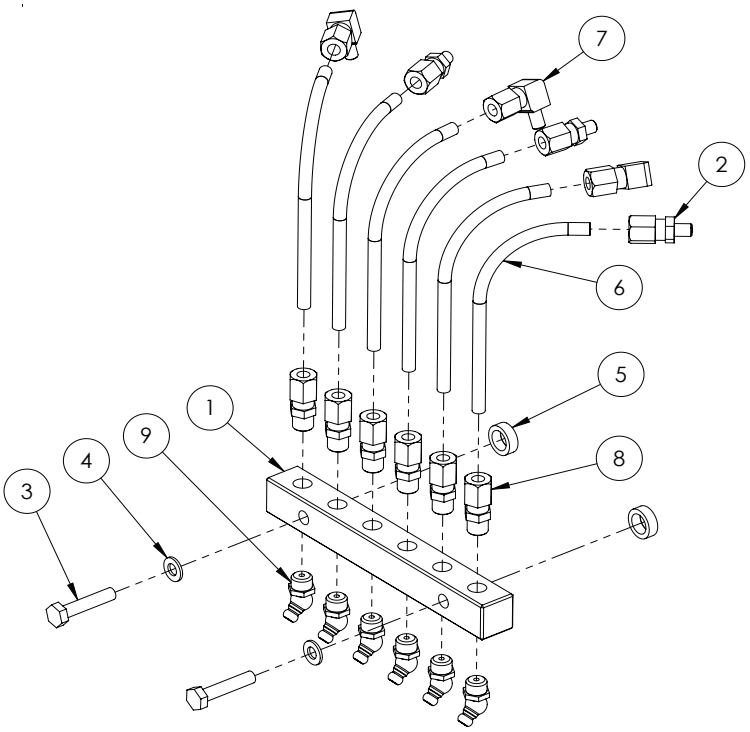

ITEM NO.	PART NUMBER	DESCRIPTION	QTY.
1	-	Grease Fitting Header Block	1
2	GA5069985	Grease fitting line connector straight 6mm	3
3	GA5004079	Set Screw M6 x 30 ZP GR8.8	2
4	GA5004437	Washer 6mm Flat SS	2
5	GA4552080	Crush tube, 10.2 ID x 15 OD x 5mm long	2
6	GA5070005	Grease Line 6mm Pre Filled	6
7	GA5069995	Grease fitting, Elbow 90 degree, Line connector 6mm	3
8	GA5055225	Pneumatic fitting, Straight adaptor, 1/8" BSP male thread x Nut retainer suit 6 mm tube	6
9	GA5055125	Grease Nipple 45 degree 1/8" gas thread ZP	6

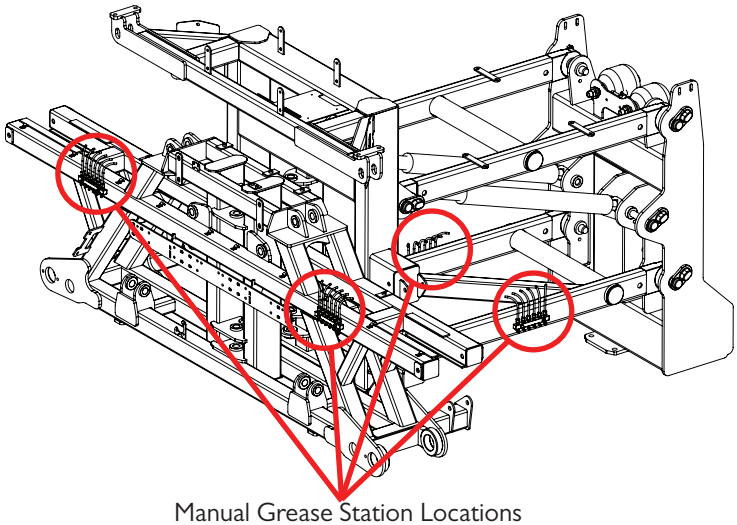

Manual Grease Station Locations

UltraGlide Block & Smart Box Mounting

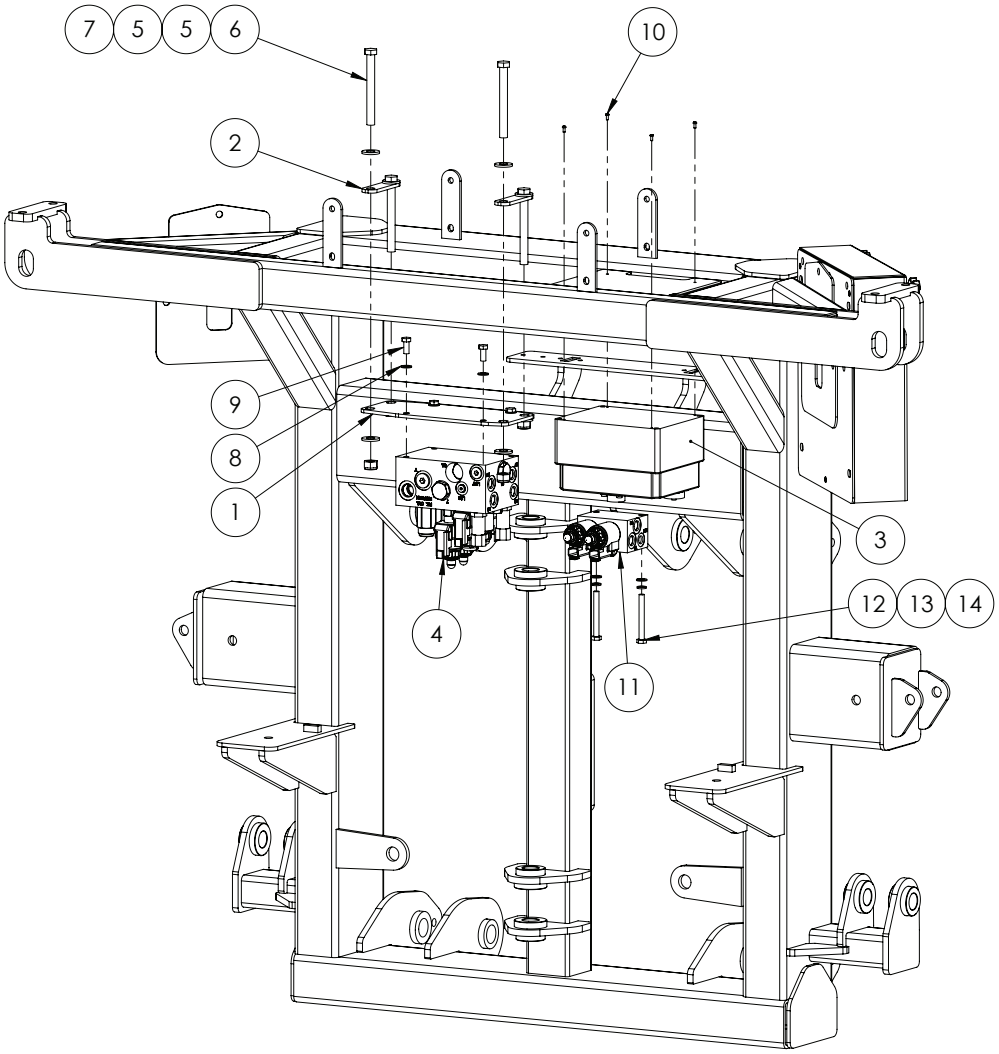

ITEM NO.	PART NUMBER	DESCRIPTION	QTY.
1	GA4523975	UltraGlide mount plate bolt on	1
2	GA4523976	UltraGlide top plate bolt on	2
3	GA4948781	Smart Box, Suit 3TS 1 to 10 section	1
4	0630131125	UltraGlide block	1
5	GA5000577	Washer 12mm Flat SS HD	8
6	GA5011199	Bolt M12 x 110 ZP GR8.8	4
7	GA5012461	Nut M12 Nyloc ZP	4
8	GA5003631	Washer 5/16” Flat SS	4
9	GA5048485	Set Screw, 5/16" x 3/4" BSW, GR8 SS	4
10	-	Smart Box mounting screw, comes with box. (equivalent is 4 gauge x 5/16” (8mm))	4
11	GA5071365	Valve, hydraulic, UltraGlide XT, Raven	1
12	GA5004738	Bolt M8 x 70 ZP GR8.8	2
13	GA5004919	Washer 8mm Spring SS	2
14	GA5003643	Washer 8mm Flat SS HD	2

Raven XT - Slant Cylinder Mounting

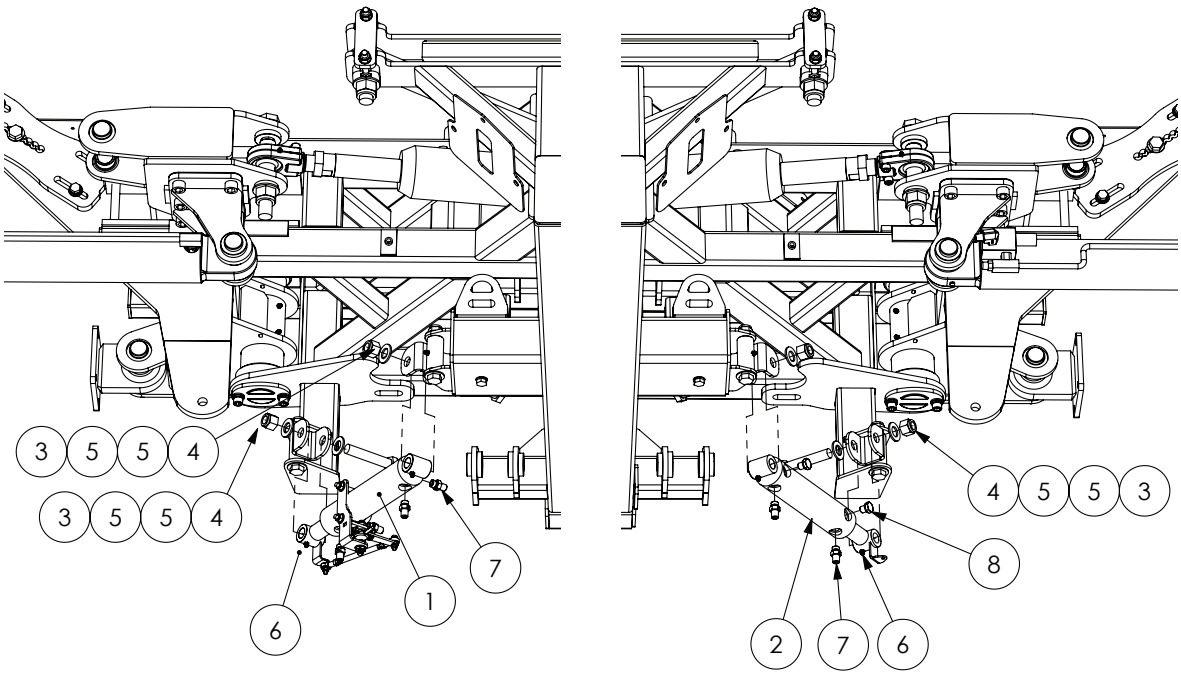

ITEM NO.	PART NUMBER	DESCRIPTION	QTY.
1	*	Slant Cylinder, Sensor Assembly, suit TriTech Centre Section with Raven XT UltraGlide	1
2	GA5070955	Cylinder Hydraulic Center Slant suit Raven XT UltraGlide	1
3	GA5049490	Bolt 3/4" UNC x 4" HT ZP	4
4	GA5048430	Nut, Nyloc, 3/4" UNC, ZP	4
5	GA5001741	Washer 20mm Flat SS HD	8
6	GA5012203	Grease nipple, Short, 1/4" UNF	4
7	GA3500358	Hydraulic adaptor, Nipple, 1/4" BSPT male x 9/16" UN male O-ring	6
8	GA3500299	Hydraulic adaptor, Plug, 1/4" BSPP male	2

* Sub-assembly on following pages

Raven XT - Slant Cylinder Assembly

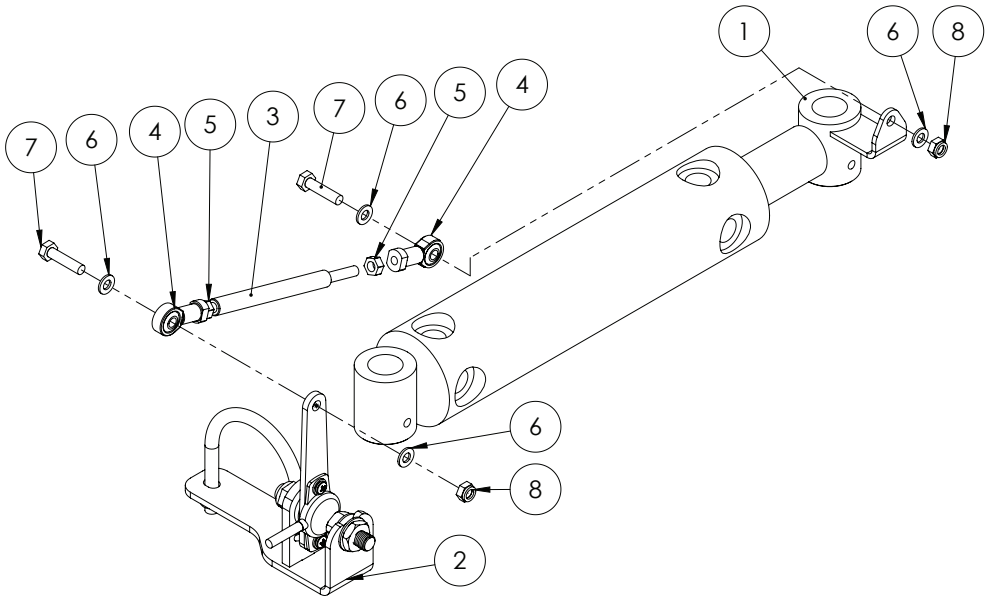

ITEM NO.	PART NUMBER	DESCRIPTION	QTY.
1	GA5070955	Cylinder Hydraulic Center Slant, suit Raven XT UltraGlide	1
2	*	Sensor Bracket Assembly, suit Raven XT UltraGlide	1
3	GA4583065	Link Rod Steering Axle Sensor	1
4	GA5052725	Rod End 6mm female	2
5	GA5049030	Nut M6 Plain	2
6	GA5004437	Washer 6mm Flat SS	4
7	GA5004073	Bolt M6 x 25	2
8	GA5048115	Nut nyloc M6	2

* Sub-assembly on following pages

Raven XT - Sensor Bracket Assembly

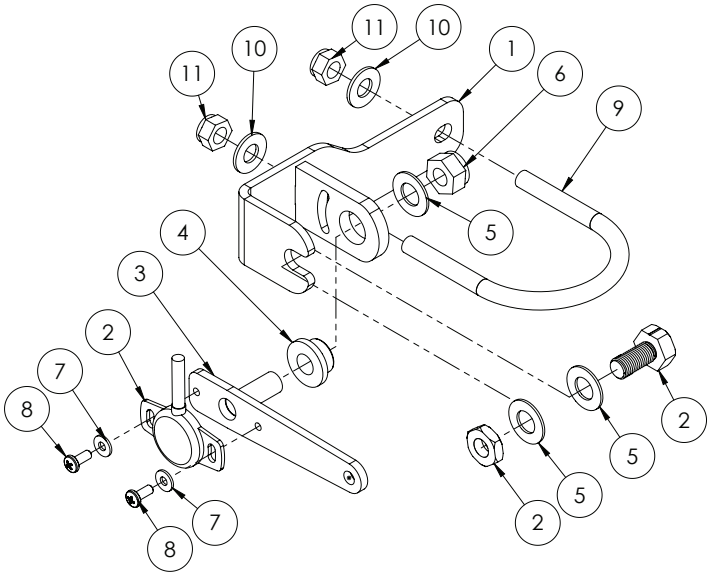

ITEM NO.	PART NUMBER	DESCRIPTION	QTY.
1	GA4659955	Raven XT Slant Sensor Bracket	1
2	GA5071360	Sensor, rotary non-contact assembly, con-x-all, Raven	1
3	GA4659960	Raven XT Tilt Sensor Pivot Link	1
4	GA5070490	Igus Bush 22mm od x 10mm long	1
5	GA5000117	Washer 10mm Flat SS HD	3
6	GA5000141	Nut M10 Nyloc	1
7	GA5020510	Washer 4mm Flat SS	2
8	GA5011360	Bolt M4 x 10 Pan Head ZP	2
9	GA5018249	U Bolt, Round top, M8 x 60 x 75mm	1
10	GA5003643	Washer 8mm Flat SS HD	2
11	GA5052590	Nut M8 Nyloc SS	2

Node - Raven

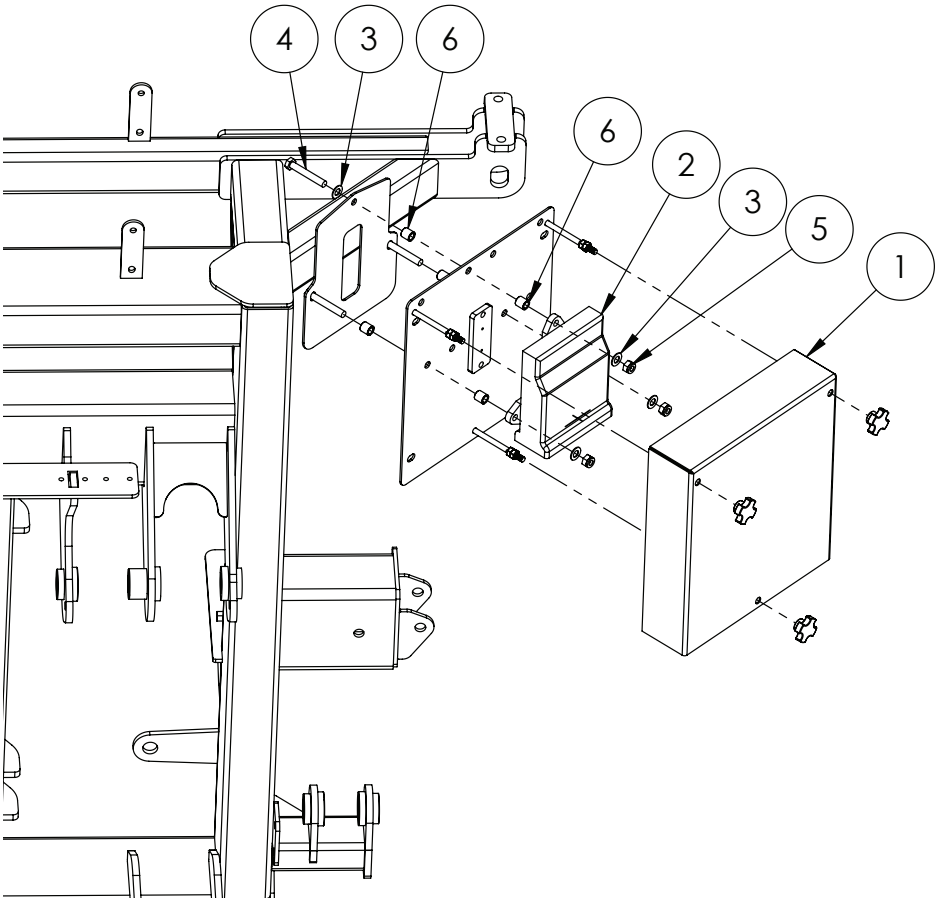

ITEM NO.	PART NUMBER	DESCRIPTION	QTY.
1	GA4905120	Job computer box / cover assembly	1
2	GA5075935	Node, Accuboom and Boom sense, CAN, Raven	1
3	GA5000117	Washer 10mm Flat SS HD	6
4	GA5006101	Bolt M10 x 65 ZP GR8.8	3
5	GA5000141	Nut M10 Nyloc ZP	3
6	GA4552075	Crush tube, 10.2 ID x 15 OD x 15mm long	6

Nodes - UltraGlide

ITEM NO.	PART NUMBER	DESCRIPTION
1	GA5075808	Node, CAN Autoboom UltraGlide, Raven
2	GA3000035	Node, AutoBoom UltraGlide ISO bus, Raven
3	GA3000049	Node, AutoBoom UltraGlide XT CAN non ISO bus, Raven
4	GA5071370	Node, ECU ISO BUS CAN, UltraGlide XT, Raven

Oversize Sign Mount

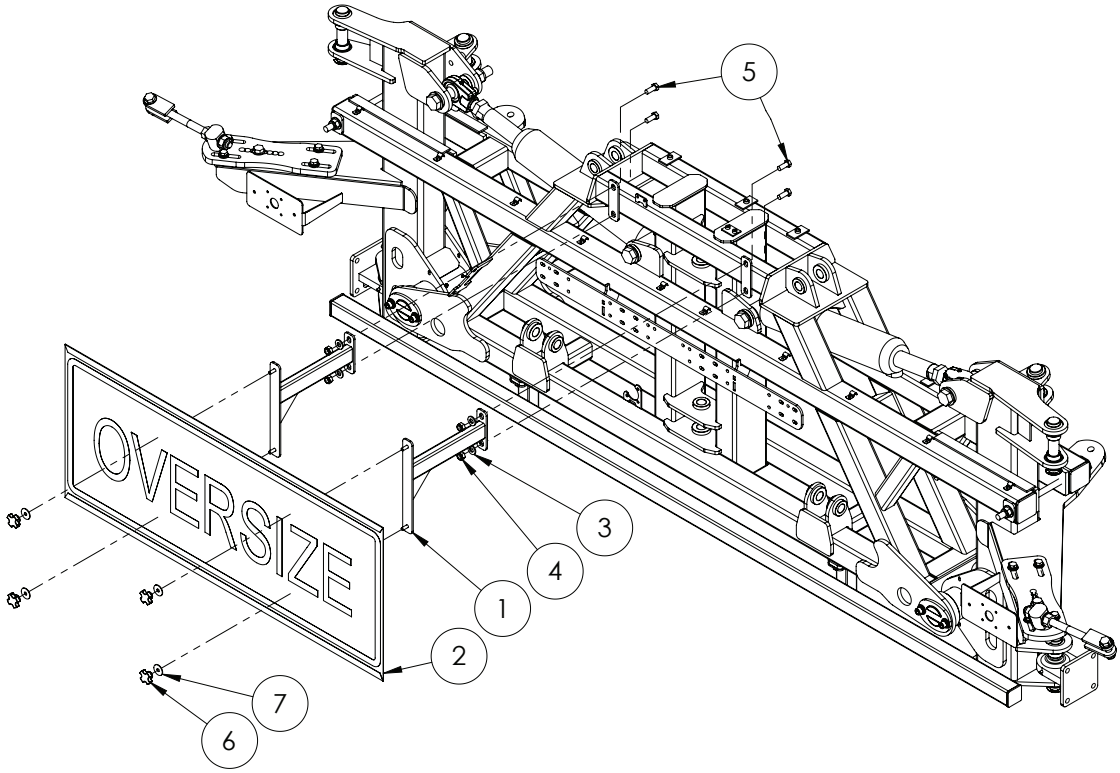

ITEM NO.	PART NUMBER	DESCRIPTION	QTY.
1	GA4658150	Bracket, Oversize sign mount arm, Bolt on, 2011 centre	2
2	GA5009613	Oversize sign, Yellow, Reflective with folded edges	1
3	GA5000577	Washer 12mm Flat SS HD	4
4	GA5012461	Nut M12 Nyloc ZP	4
5	GA5000305	Set Screw M12 x 30 ZP GR8.8	4
6	GA5069875	Knob Star grip nut M8 x 40 DIA	4
7	GA5003645	Washer, 5/16" ID x 1 1/4" OD, Flat SS	4

Chapter 14

BOOM WING

Fence Line End Protector - Quick Fit

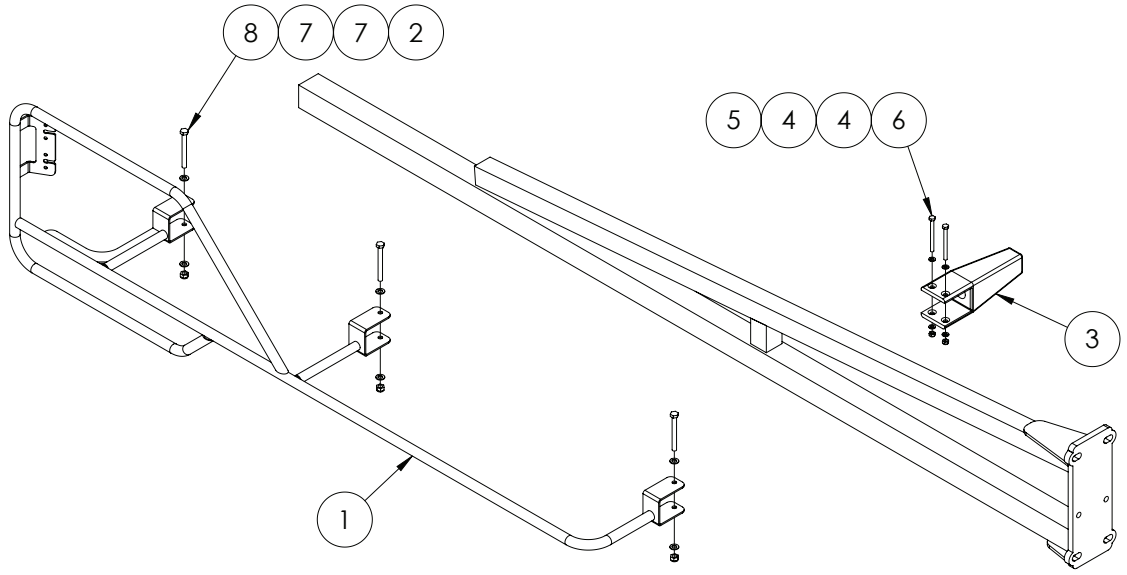

ITEM NO.	PART NUMBER	DESCRIPTION	QTY.
1	GA4656316	Boom End Protector easy fit Right Hand	1
	GA4656317	Boom End Protector easy fit Left Hand	
2	GA5004917	Nut M8 Nyloc ZP	3
3	GA5006226	Boom stopper, Rubber, 210mm bumper, Suits 50 x 50mm RHS	1
4	GA5004437	Washer 6mm Flat SS	4
5	GA5048115	Nut M6 Nyloc ZP	2
6	GA5004107	Bolt M6 x 70 ZP GR8.8	2
7	GA5003643	Washer 8mm Flat SS HD	6
8	GA5052600	Bolt M8 x 75 SS	3

Boom Protector Assembly - Outer

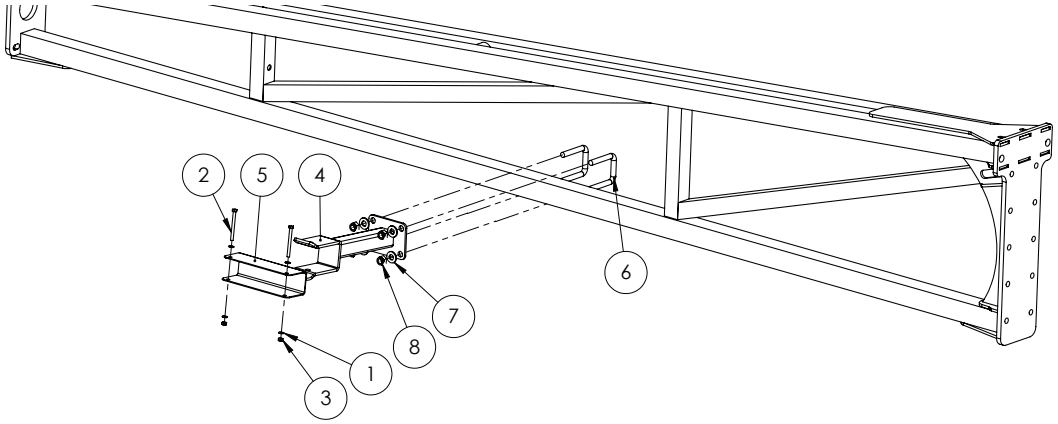

ITEM NO.	PART NUMBER	DESCRIPTION	QTY.
1	GA5004437	Washer 6mm Flat SS	4
2	GA5004107	Bolt M6 x 70 ZP GR8.8	2
3	GA5048115	Nut M6 Nyloc ZP	2
4	GA4656277	Support bracket, Folded boom wing, TriTech	1
5	F70294A	Boom wing protector Suit 50 x 50 x 200mm long (2mm SS)	1
6	GA5011251	U bolt, Square top, M12 x 52mm x 80mm	2
7	GA5000577	Washer 12mm Flat SS HD	4
8	GA5012461	Nut M12 Nyloc ZP	4

Boom Protector Assembly - Inner

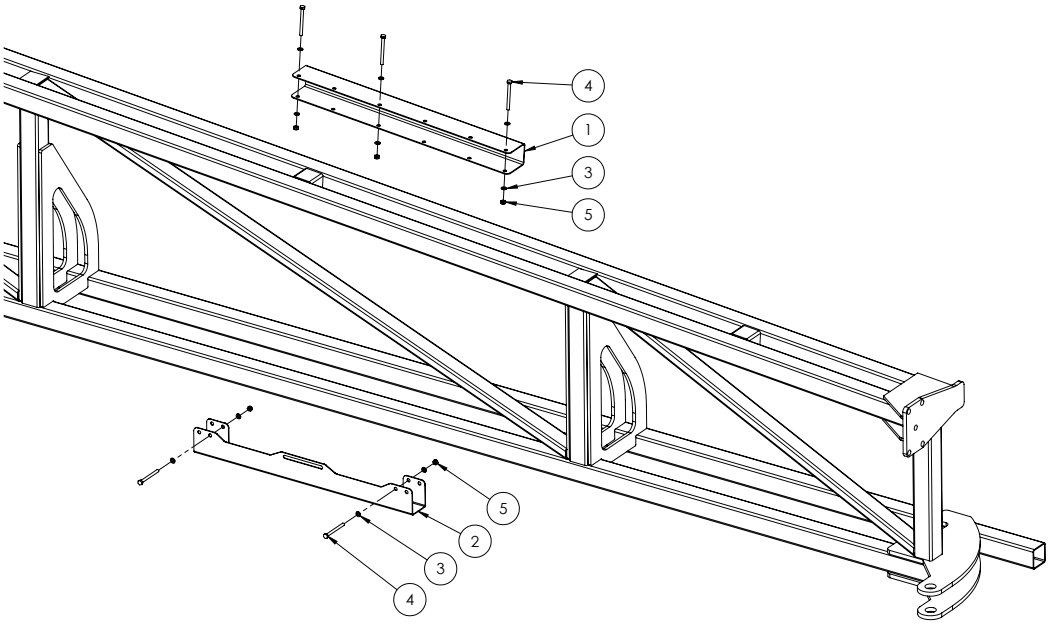

ITEM NO.	PART NUMBER	DESCRIPTION	QTY.
1	F70799A	Protector, Outer wing, Suit 50 x 50 RHS, 600 long, 2mm SS	1
2	GA4505005	Boom Slide Protector SS with cutout 2013	1
3	GA5004437	Washer 6mm Flat SS	10
4	GA5004107	Bolt M6 x 70 ZP GR8.8	5
5	GA5048115	Nut M6 Nyloc ZP	5

Boom Fold Adjuster

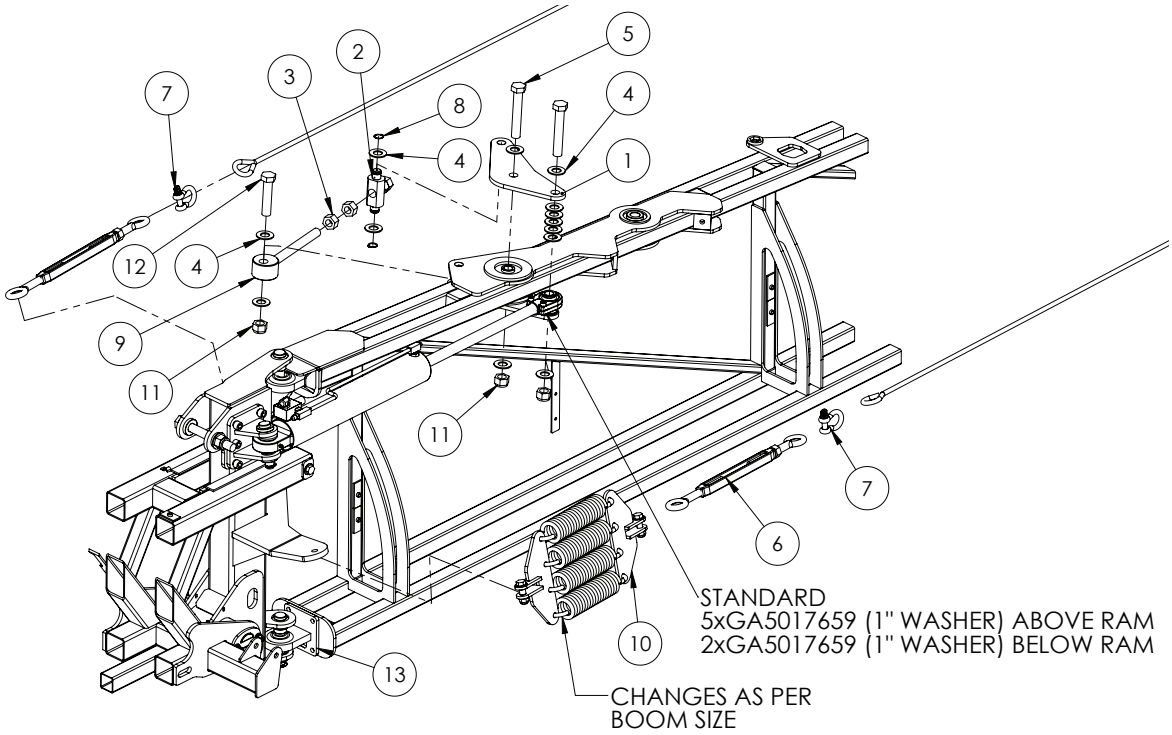

ITEM NO.	PART NUMBER	DESCRIPTION	QTY.
1	24mk4DB005LAS	Fold ram adjuster plate suit tritec boom	2
2	24MK4DB006	Bush / pin, Fold ram adjuster nut and bolt retainer	1
3	GA5010991	Nut 1" UNF 12 TPI ZP	4
4	GA5017681	Washer 1" x 2" 7g Flat Thin SS	15
5	GA5006043	Bolt 1" UNF 14 TPI x 6" ZP GR8	2
6	GA5017061	Turnbuckle, Eye ends, M22 thread & lock nut, Galvanised	1
7	GA5075230	Bow Shackle 13mm WLL 3.25T Black	2
8	GA5008519	Circlip external 25mm	2
9	GA5070775	Boom fold adjuster eyelet bolt, HD MY13	1
10	*	Boom Cable Springs - 24-36m	1
11	GA5012445	Nut 1" UNF 14 TPI Nyloc ZP	3
12	GA5006039	Bolt 1" UNF 14 TPI x 4 1/2" ZP GR8	1
13	GA4535285	Shim, 1mm, Lower rose end, Delta boom	#
	GA4535355	Shim, 3mm, Delta boom rose joint	#
	GA4535360	Shim, 5mm, Delta boom rose joint	#

* Sub-assembly on following pages

Quantities will vary depending on adjustment needed.

Cable Drum

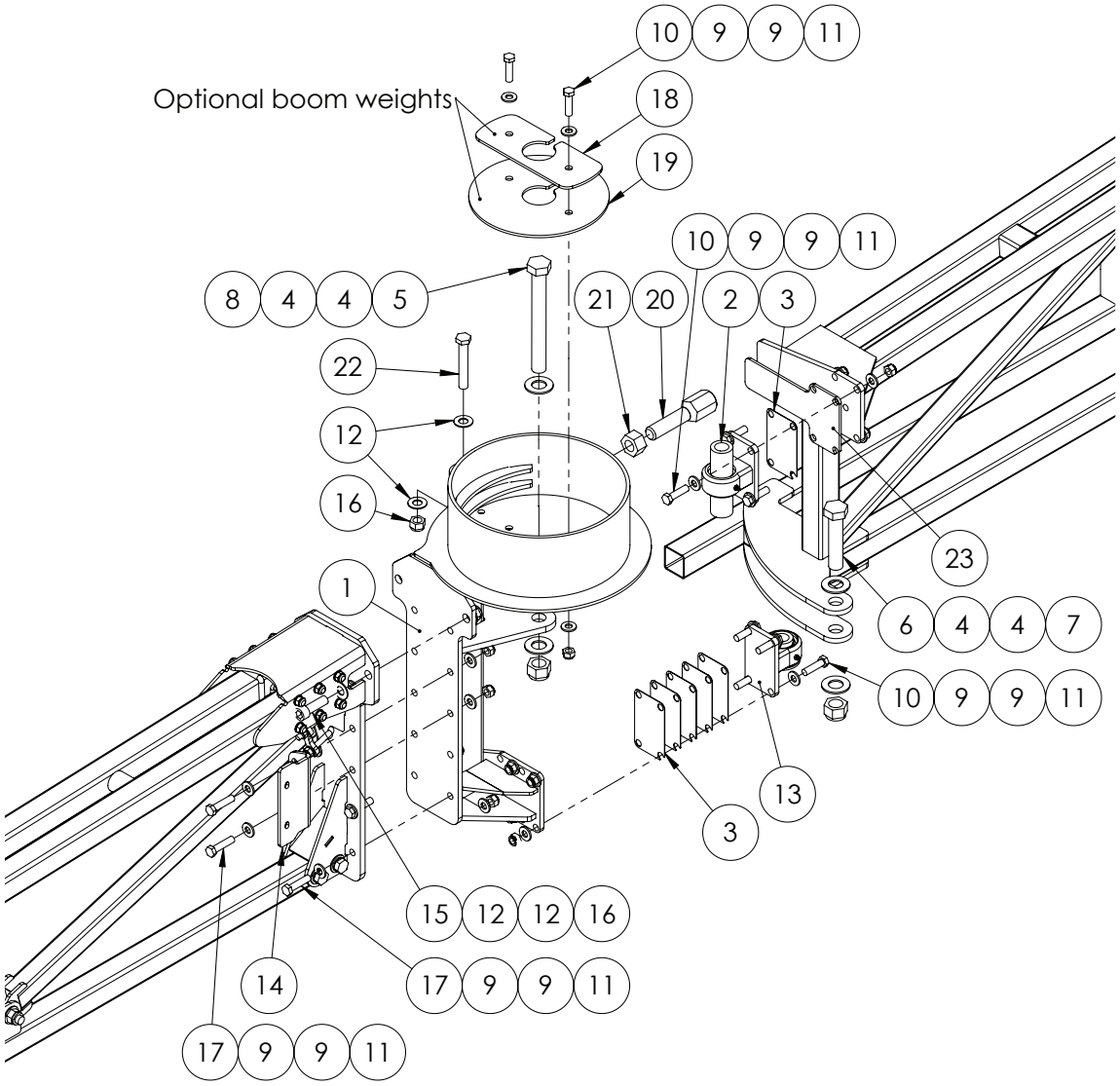

ITEM NO.	PART NUMBER	DESCRIPTION	QTY.
1	GA4659580	Cable drum, Boom hinge, Right side, TriTech	1
	GA4659585	Cable drum, Boom hinge, Left side, TriTech	1
	GA4659600	Boom drum hinge OFFSET 24+ RH	1
	GA4659605	Boom drum hinge OFFSET 24+ LH	1
2	GA4932342*	Upper Pivot Assembly	1
3	DB-ADJ-16LAS	Shim, cable drum pivot, SS, 1mm	6
4	GA5017681	Washer 1" x 2" 7g Flat Thin SS	4
5	GA0500025	Bolt, 1" UNF, 12 TPI x 8 1/2", GR8 ZP	1
6	GA5006039	Bolt, 1" UNF, 14 TPI x 4 1/2", GR8 ZP	1
7	GA5012445	Nut, 1" UNF, 14 TPI, Nyloc, ZP	1
8	GA5012446	Nut, 1" UNF, 12 TPI, Nyloc, ZP	1
9	GA5000577	Washer 12mm Flat SS Heavy Duty	40

Continued over page

Cable Drum

ITEM NO.	PART NUMBER	DESCRIPTION	QTY.
10	GA5000327	Set Screw M12 x 45 ZP GR8.8	10
11	GA5012461	Nut M12 Nyloc ZP	20
12	GA5001043	Washer 16mm Flat SS HD	6
13	GA4932343*	Lower Pivot Assembly	1
14	GA4522725	Boom hose holder plate outer	1
15	GA5000935	SHCS M16 x 50 ZP GR12.9	2
16	GA5001029	Nut M16 Nyloc ZP	3
17	GA5011239	Bolt, M12 x 50, ZP GR 8.8	10
18	GA4504535	Boom weight, Cable drum disc, 0.806 kg	1
19	GA4504530	Boom weight, Cable drum disc, 1.792 kg	1
20	GA4572495	Bolt, 1" UNF, 12 TPI, Boom drum stopper	1
21	GA5010991	Nut, 1" UNF, 12 TPI, ZP	1
22	GA5011269	Bolt M16 x 100 ZP GR8.8	1
23	GA4524690	Wear plate Upper boom top MY13 SS	1

* Sub-assembly on following pages

Bi-fold

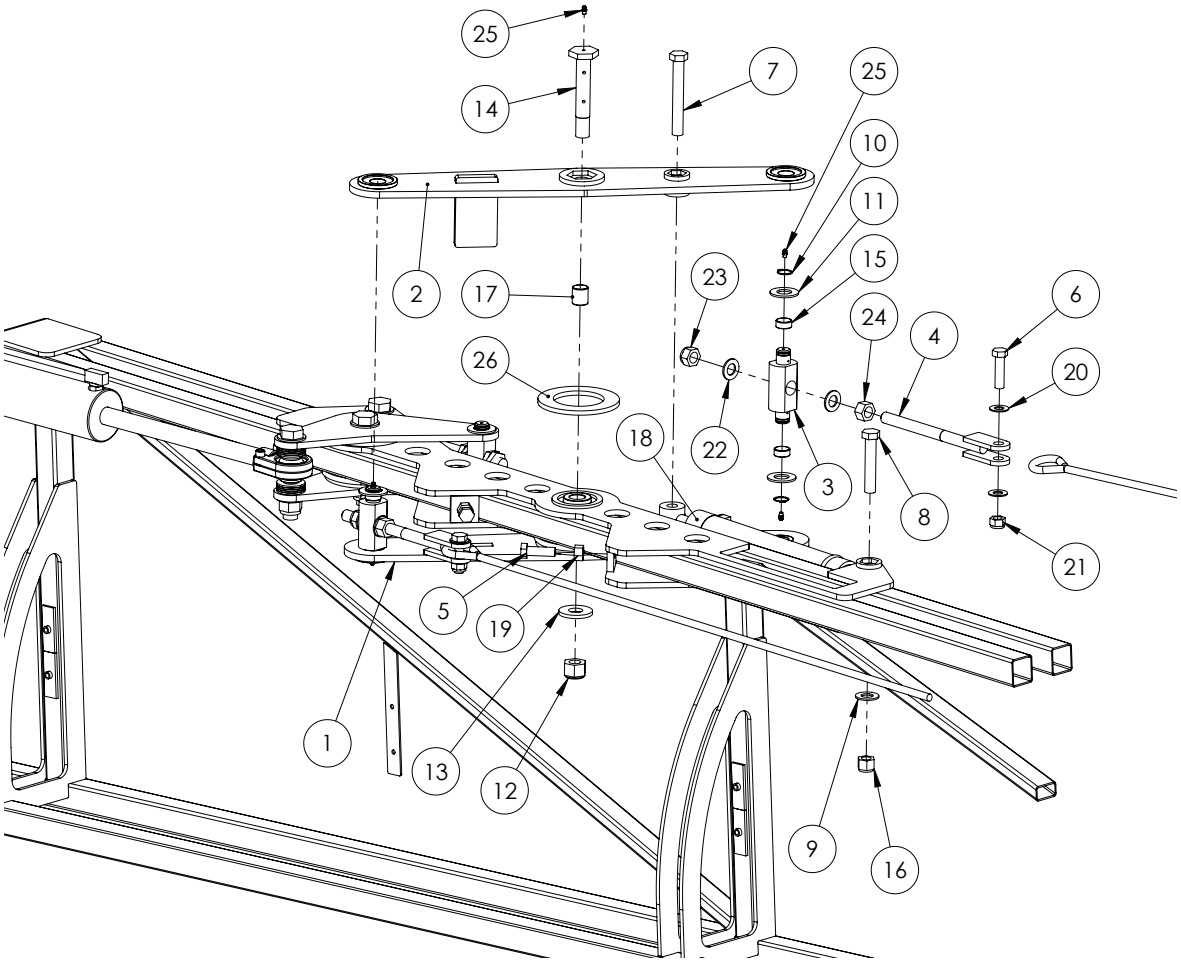

ITEM NO.	PART NUMBER	DESCRIPTION	QTY.
1	GA4656295	Boom Bi-Fold Bottom Bracket	1
2	GA4656290	Boom Bi-Fold Top Bracket	1
3	24mk4DB006	Bush / pin, Fold ram adjuster nut and bolt retainer	2
4	GA5020320	Cable Adjuster, threaded, M20	2
5	GA5000931	Bolt M16 x 50 ZP GR8.8	2
6	GA5000939	Bolt M16 x 60 Black GR8.8	2
7	GA5070335	Bolt 3/4" UNC x 5 1/2", ZP HT GR8	1
8	GA5049490	Bolt 3/4" UNC x 4" ZP GR8	1
9	GA5001045	Washer, 3/4", Flat ZP	2
10	GA5008519	Circlip, External, 25mm	4
11	GA5017681	Washer 1" x 2" 7g Flat Thin SS	4
12	GA5012469	Nut M24 Nyloc ZP	1
13	2SF003LAS	2nd stage fold pivot washer 6mm FMS, 60 OD 25.3mm ID	1
14	2SF-007	Pivot pin	1
15	GA5009463	Glacier Bush, ID 25 x 15mm long	4
16	GA5048430	Nut, Nyloc, 3/4" UNC, ZP	2
17	GA5009467	Glacier Bush, ID 25 x 30mm long	2

Continued over page

Bi-fold

ITEM NO.	PART NUMBER	DESCRIPTION	QTY.
18	GA5021010	Hydraulic cylinder, 2” bore x 1” rod x 10” stroke	1
19	GA5012385	Nut M16 Hex ZP	2
20	GA5001043	Washer 16mm Flat SS HD	4
21	GA5001029	Nut M16 Nyloc ZP	2
22	GA5001741	Washer 20mm Flat SS HD	4
23	GA5048125	Nut M20 Nyloc Coarse ZP	2
24	GA5001709	Nut M20 Coarse Hex ZP	2
25	GA5012203	Grease nipple, Short, 1/4” UNF	7
26	MACH0102	2nd stage, pivot, nylon washer, black poly	2

Boom Cables 24-36m

PART NUMBER	DESCRIPTION	QTY.
GA5000073	Cable, 10mm, Solid core, Heavy duty, Galvanised	See below.
	24-30m - Front - Cable cut length (Eye to eye length 5110mm)	5490mm(x2)
	24-30m - Rear - Cable cut length (Eye to eye length 5740mm)	6820mm(x2)
	24-30m - Bi-fold Front - Cable cut length (Eye to eye length 4685mm)	5065mm(x2)
	24-30m - Bi-fold Rear - Cable cut length (Eye to eye length 4640mm)	5720mm(x2)
	33-36m - Front - Cable cut length (Eye to eye length 6820mm)	7200mm(x2)
	33-36m - Rear - Cable cut length (Eye to eye length 7450mm)	8530mm(x2)
	33-36m - Bi-fold Front - Cable cut length (Eye to eye length 6385mm)	6765mm(x2)
	33-36m - Bi-fold Rear - Cable cut length (Eye to eye length 6385mm)	7465mm(x2)
GA5000215	Thimble, Cable, suit 11 - 12mm	8
GA5005391	Ferrule, Aluminium, 40 long x 4.5mm wall	10
GA5001965	Heat Shrink 25.4mm Black x 120mm long	10

Note: Front cable cut lengths are 380 mm longer than eye to eye measurement. Rear cable cut lengths are 1080 mm longer than eye to eye measurement.

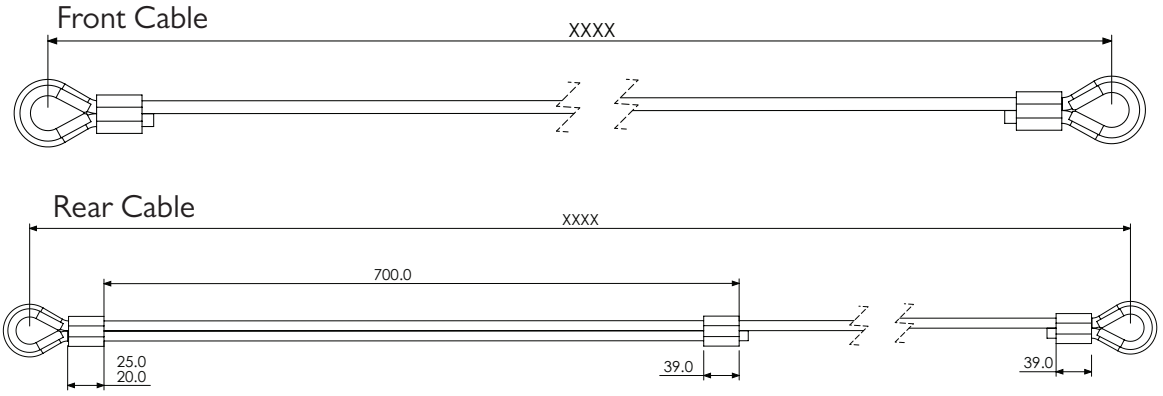

Boom Cable Spring - 24m

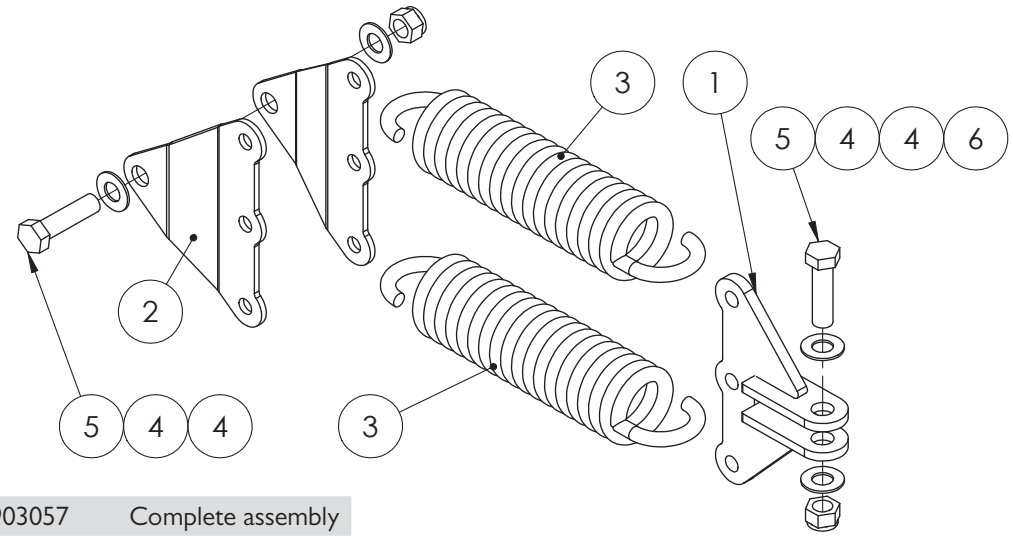

GA4903057 Complete assembly

ITEM NO.	PART NUMBER	DESCRIPTION	QTY.
1	GA4656230	Mount, Boom cable spring, Suit 24 - 33 meter TriTech boom	1
2	F70057A	3 spring mounting plate suit delta boom	2
3	GA5010793	Spring, tension, 70 OD x 329 long x 12mm, large	2
4	GA5001043	Washer 16mm Flat SS HD	4
5	GA5000939	Bolt M16 x 60 Black GR8.8	2
6	GA5001029	Nut M16 Nyloc ZP	2

Boom Cable Spring - 28-30m

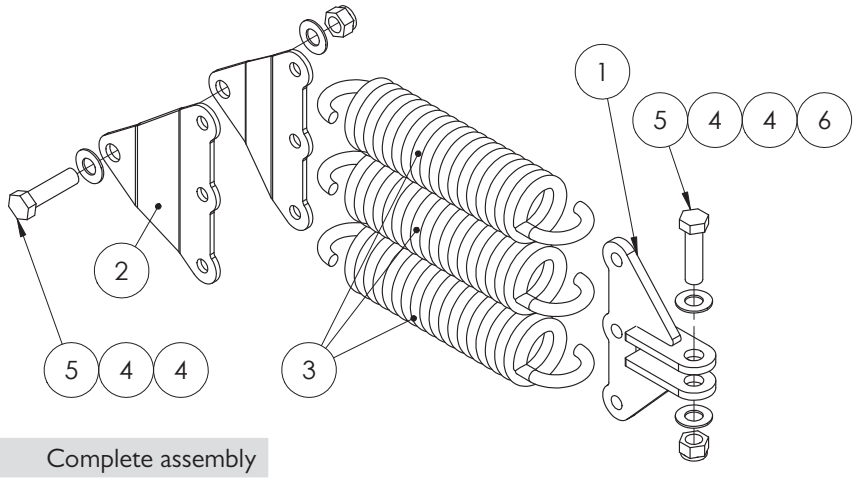

GA4903067 Complete assembly

ITEM NO.	PART NUMBER	DESCRIPTION	QTY.
1	GA4656230	Mount, Boom cable spring, Suit 24 - 33 meter TriTech boom	1
2	F70057A	3 spring mounting plate suit delta boom	2
3	GA5010793	Spring, tension, 70 OD x 329 long x 12mm, large	3
4	GA5001043	Washer 16mm Flat SS HD	4
5	GA5000939	Bolt M16 x 60 Black GR8.8	2
6	GA5001029	Nut M16 Nyloc ZP	2

Boom Cable Springs - 33 & 36m

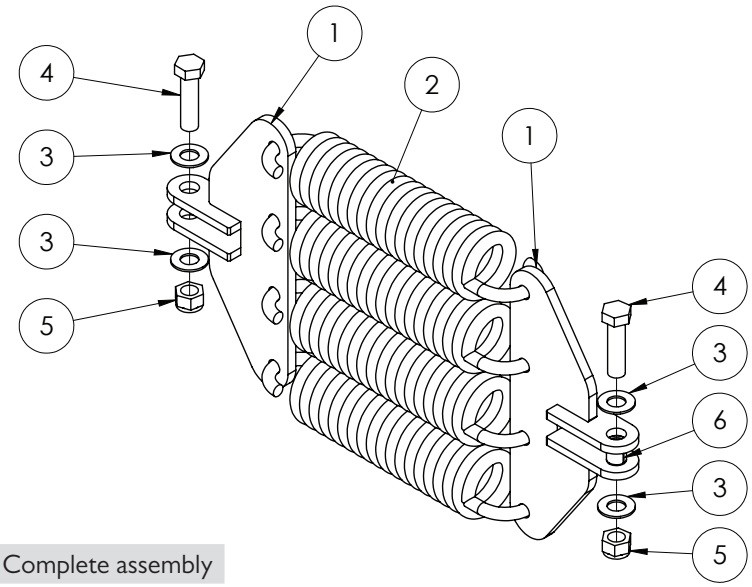

GA4905665 Complete assembly

ITEM NO.	PART NUMBER	DESCRIPTION	QTY.
1	GA4659710	Cable Spring-Shocker Mount Component	2
2	GA5010793	Spring, tension, 70 OD x 329 long x 12mm, large	4
3	GA5001043	Washer 16mm Flat SS HD	4
4	GA5000939	Bolt M16 x 60 Black GR8.8	2
5	GA5001029	Nut M16 Nyloc ZP	2
6	GA5075220	Glacier bush flanged 16mm suit boom cable pivot	1

Upper Pivot Assembly

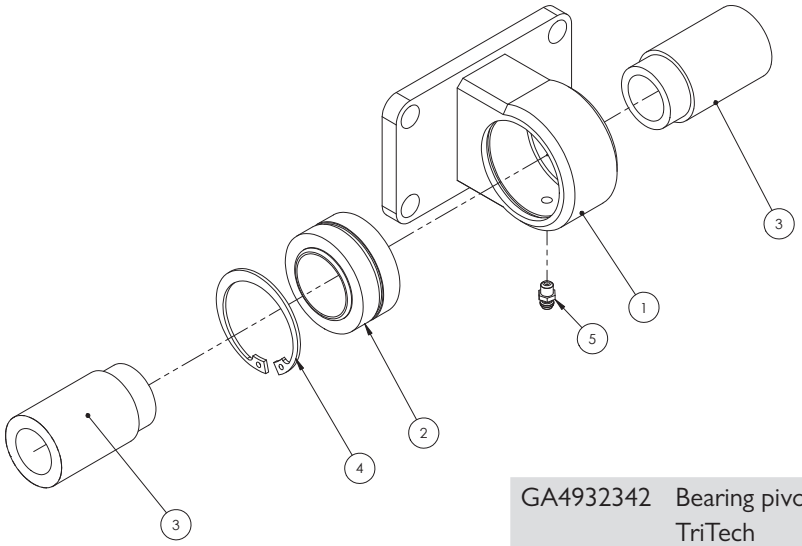

GA4932342 Bearing pivot, Upper, TriTech

ITEM NO.	PART NUMBER	DESCRIPTION	QTY.
1	GA4656190	Boom hinge bearing Mount 24+	1
2	GA5015659	Bearing, Spherical bush, 34.925 ID x 55.663 OD x 30.150mm thick	1
3	DB-ADJ-13	Bush, Stepped, 25.5 ID x 40 OD x 69.75mm long	2
4	GA5010573	Circlip, Internal, Suit 55mm bore	1
5	GA5012203	Grease nipple, Short, 1/4" UNF	1

Lower Pivot Assembly

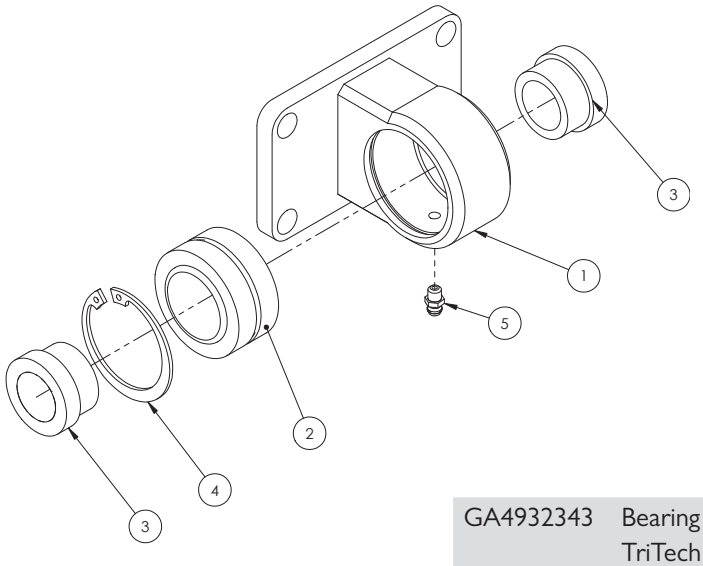

GA4932343 Bearing pivot, Lower, TriTech

ITEM NO.	PART NUMBER	DESCRIPTION	QTY.
1	GA4656190	Boom hinge bearing Mount 24+	1
2	GA5015659	Bearing, Spherical bush, 34.925 ID x 55.663 OD x 30.150mm thick	1
3	DB-ADJ-02	Bush, Short, 40 OD x 25.5 ID x 23.75mm long	2
4	GA5010573	Circlip, Internal, Suit 55mm bore	1
5	GA5012203	Grease nipple, Short, 1/4" UNF	1

Steel Inner Wings

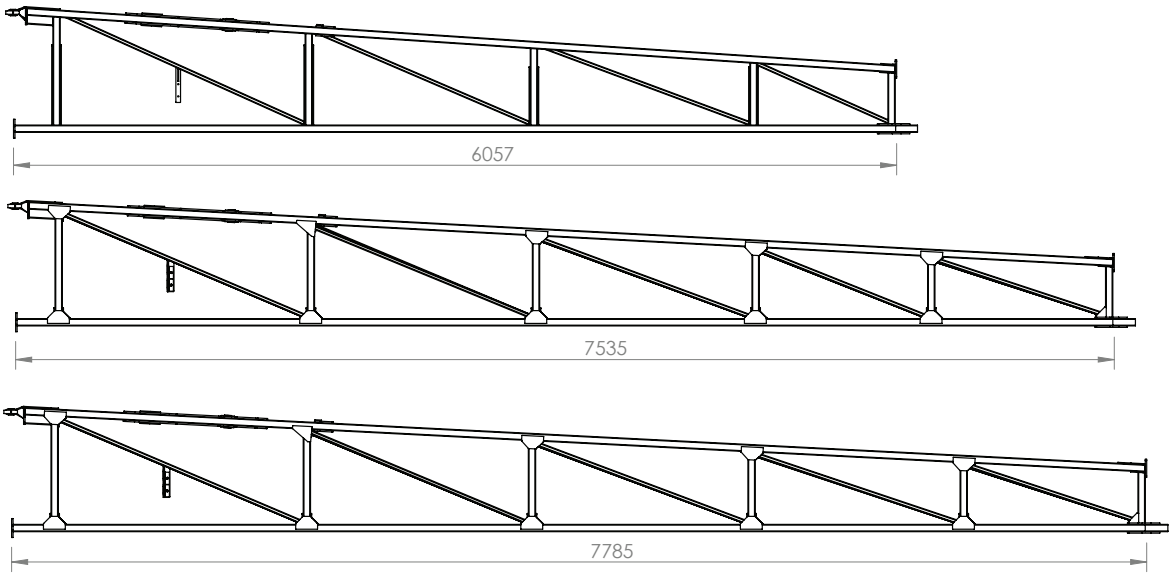

PART NUMBER	DESCRIPTION
GA4656780	24-30m Boom inner Bi-Fold RH (6057mm)
GA4656785	24-30m Boom inner Bi-Fold LH (6057mm)
GA4656790	36m Boom inner Bi-Fold RH (7535mm)
GA4656795	36m Boom inner Bi-Fold LH (7535mm)
GA4656791	36m Inner Wing RH (7785mm)
GA4656796	36m Inner Wing LH (7785mm)

Aluminium Outer Wings

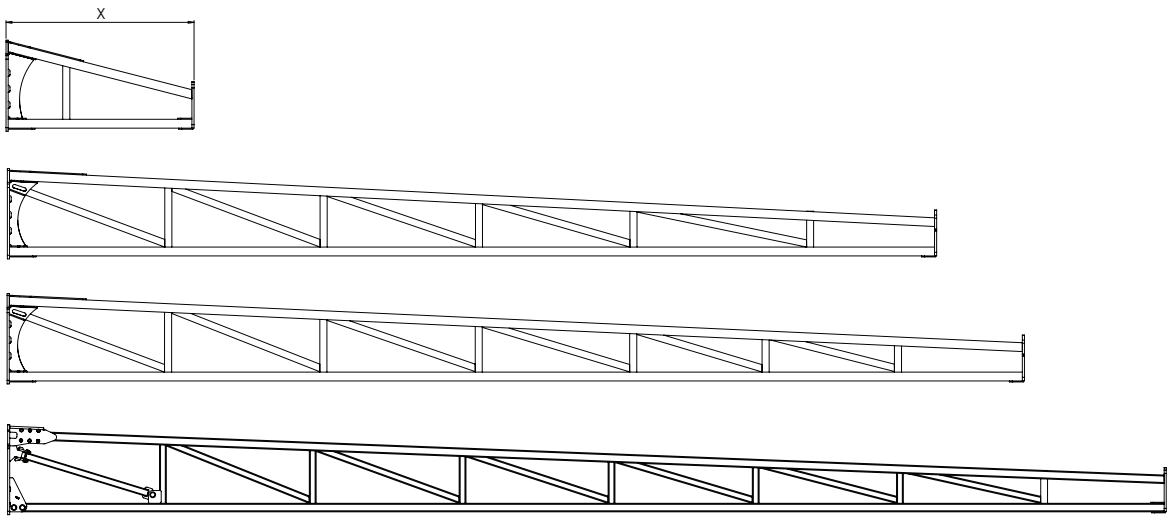

PART NUMBER	DESCRIPTION
GA4659820	24m Outer boom section (1055mm Long) (Fit with 30m inner)
GA4659925	24m Outer boom section (3749mm Long) (Fit with 24m inner)
GA4656062	28m Outer boom section (4264mm Long)
GA4656067	30m Outer boom section (5265mm Long)
GA4656072	33m Outer boom section (5764mm Long)
GA4907345	36m Outer boom Assembly (6805mm Long)

Aluminium Breakaway Tip

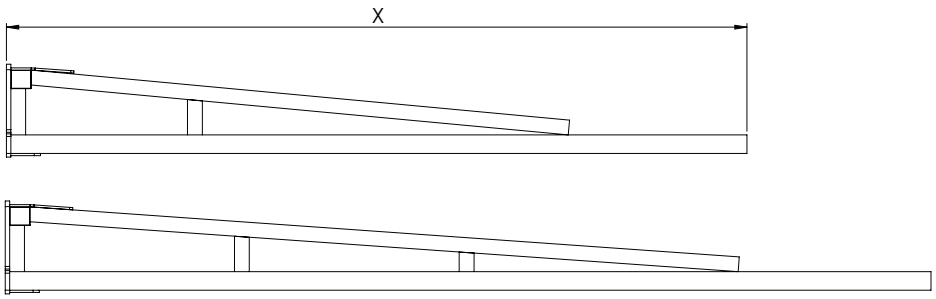

PART NUMBER	DESCRIPTION
GA4656123	Boom breakaway end - 2m
GA4656124	Boom breakaway end - 2.5m

Aluminium Outer

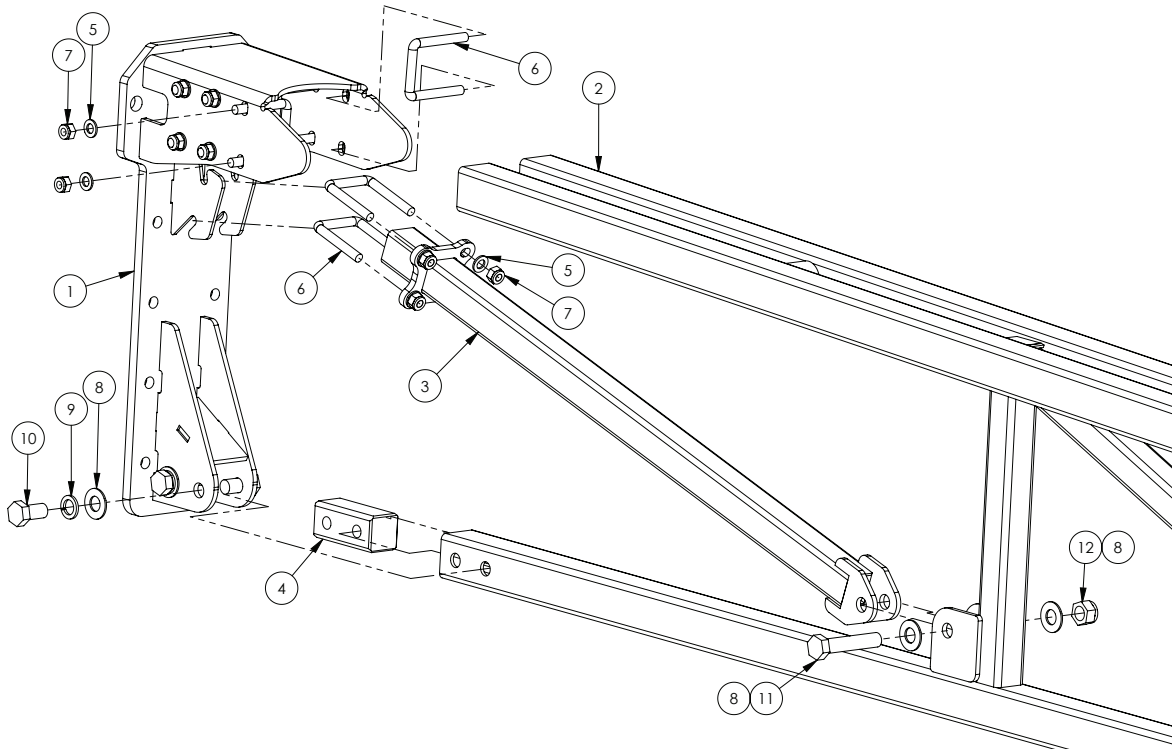

ITEM NO.	PART NUMBER	DESCRIPTION	QTY.
1	GA4660376	Aluminium Boom Mount Bracket, MY15	1
2	GA4660390	Boom Section, 36m Aluminium, U Bolt Mounted	1
3	GA4660740	Brace Bar, Aluminium Boom	1
4	GA4550031	Threaded Steel Insert Block, suit 50 x 50 x 4mm Aluminium Boom	1
5	GA5000117	Washer 10mm Flat SS HD	16
6	GA5053645	U bolt, Square top, M10 x 52 x 75mm	8
7	GA5000141	Nut M10 Nyloc ZP	16
8	GA5001043	Washer 16mm Flat SS HD	6
9	GA5001051	Washer 16mm Spring SS	4
10	GA5000911	Bolt M16 x 30 ZP GR8.8	4
11	GA5011307	Bolt M16 x 80 ZP GR8.8	1
12	GA5012463	Nut M16 Nyloc SS	1

3D Breakaway 2.0

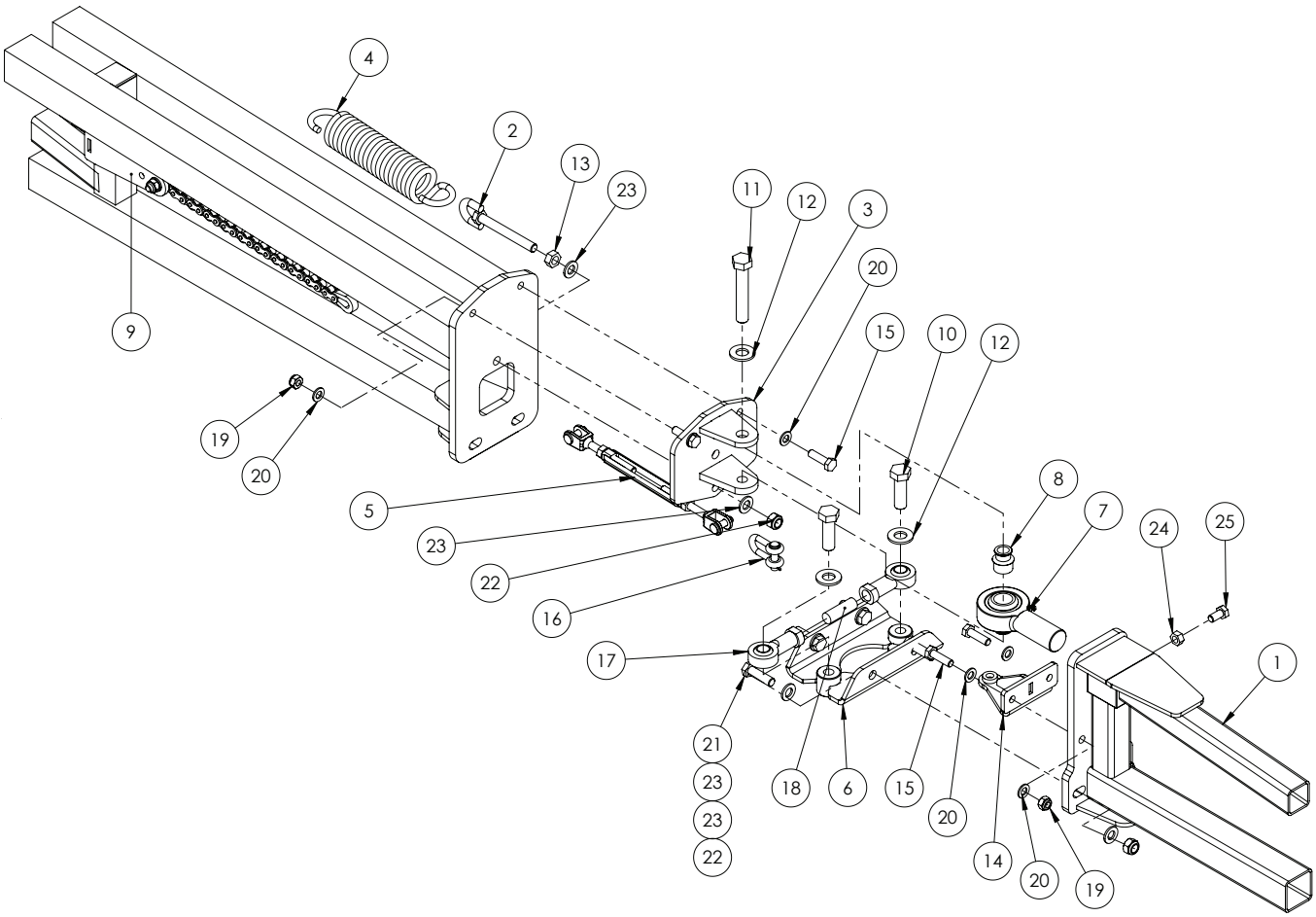

ITEM NO.	PART NUMBER	DESCRIPTION	QTY.
1	GA4656123	Boom breakaway end in Aluminium 2m	1
2	GA5075150	Eye Bolt 12mm x 100mm Short	1
3	GA4656131	Breakaway Rose End Clevis 3D 2.0	1
4	GA5016605	Spring, tension, 51.5 OD x 260 Long x 8mm, Breakaway	1
5	GA5070505	Turnbuckle / rigging screw, 10mm, SS, Clevis ends	1
6	GA4659336	Lower Pivot Bracket 3D 2.0	2
7	GA5070530	Rose End 1" x 1 1/4" male UNF thread	1
8	GA4552225	Breakaway Rose End Spacer Bush 3D 2.0	2
9	*	3D Breakaway 2.0 - Mechanism	1
10	GA5000931	Bolt M16 x 50 GR8.8 ZP	2
11	GA5011297	Bolt M16 x 90 GR8.8 ZP	1
12	GA5001043	Washer 16mm Flat SS HD	3
13	GA5000559	Nut M12 Hex ZP	1
14	GA4659810	Breakaway Hinge Bracket	1
15	GA5006111	Bolt M10 x 35 ZP GR8.8	4
16	GA5071060	10mm Utility Clevis 24CST002	1
17	GA5014469	Rod end female 16mm	2
18	GA5071105	Grub Screw M16 x 50	1

Continued over page

3D Breakaway 2.0

ITEM NO.	PART NUMBER	DESCRIPTION	QTY.
19	GA5000141	Nut M10 Nyloc ZP	4
20	GA5000117	Washer 10mm Flat SS HD	8
21	GA5000319	Set Screw M12 x 40 GR8.8 ZP	4
22	GA5012461	Nut M12 Nyloc ZP	5
23	GA5000577	Washer 12mm Flat SS HD	10
24	GA5012459	Nut M10 Hex ZP	1
25	GA5006113	Bolt M10 x 20 GR8.8 ZP	1

* Sub-assembly on following pages

3D Breakaway 2.0 - Mechanism

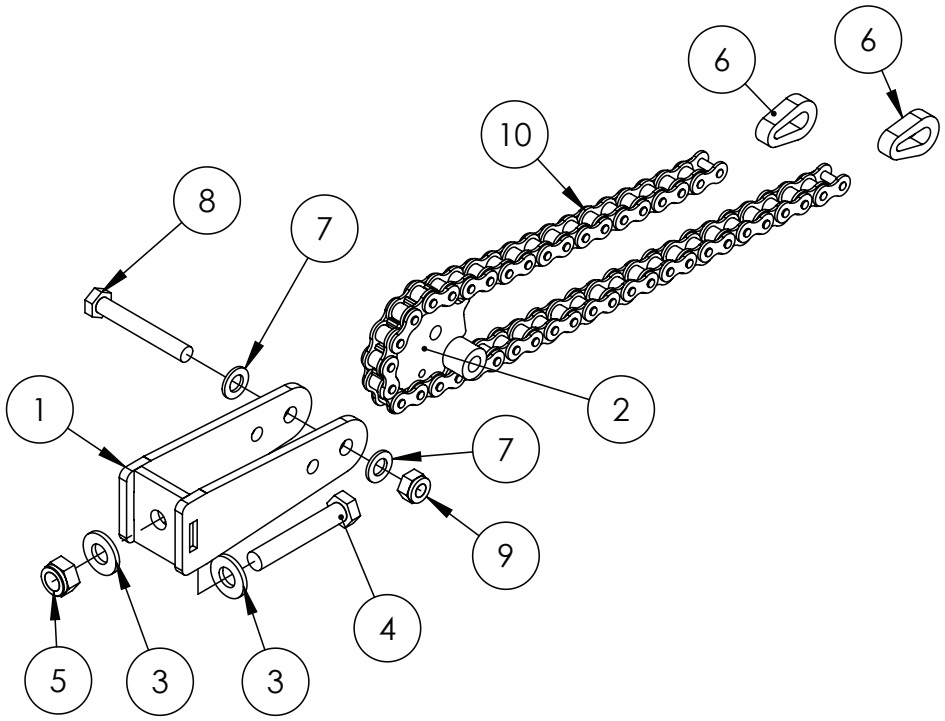

ITEM NO.	PART NUMBER	DESCRIPTION	QTY.
1	GA4659805	Breakaway Mount	1
2	GA4659800	Breakaway Centre Pivot Fab Assembly	1
3	GA5000577	Washer 12mm Flat SS HD	2
4	GA5000347	Bolt M12 x 70 ZP GR8.8	1
5	GA5012461	Nut M12 Nyloc ZP	1
6	GA4505695	Link Plate Chain End, suit breakaway	2
7	GA5000117	Washer 10mm Flat SS HD	2
8	GA5011163	Bolt M10 x 70 ZP GR8.8	1
9	GA5000141	Nut M10 Nyloc ZP	1
10	GA5068985	Chain, 5/8", 41 Pitch Breakaway Hinge, inc 2 Joining Links, 43 rollers total	1

Touch Down Wheel

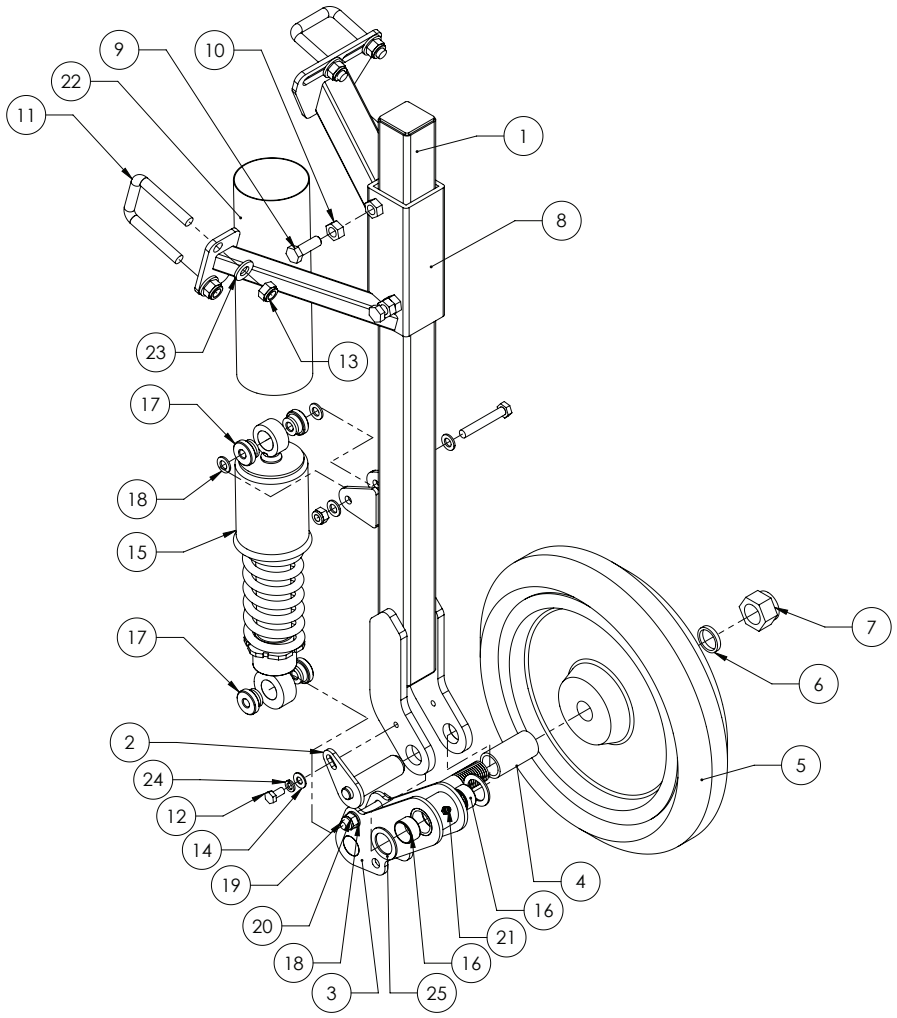

ITEM NO.	PART NUMBER	DESCRIPTION	QTY.
1	GA4657650	Boom Touch Down Wheel Arm	1
2	GA4657645	Pivot Pin, suits Boom Touch Down Wheel Swing Arm	1
3	GA4657655	Swing Arm Boom Touch Down Wheel	1
4	GA4583030	Spacer Touch Down Wheel	1
5	GA5052275	Press Wheel 15" with sealed bearings	1
6	GA4535115	Bearing Washer, suits Touch Down Wheel	1
7	GA5012446	Nut, 1" UNF, 12 TPI, Nyloc, ZP	1
8	GA4657640	Mount Boom touch down wheel	1
9	GA5000311	Set screw, M12 x 35, ZP GR 8.8	2
10	GA5000559	Nut M12 Hex ZP	2
11	GA5011251	U bolt, Square top, M12 x 52mm x 80mm	3
12	GA5011465	Bolt M8 x 16 ZP GR8.8	1
13	GA5012461	Nut M12 Nyloc ZP	6
14	GA5003643	Washer 8mm Flat SS HD	1
15	GA5067085	Universal shocker 320mm eye-eye	1
16	GA5009463	Glacier Bush, ID 25 x 15mm long	2

Continued over page

Touch Down Wheel

ITEM NO.	PART NUMBER	DESCRIPTION	QTY.
17	GA4583100	Bush, Black nylon, 30 OD x 10 ID x 16.5mm	4
18	GA5000117	Washer 10mm Flat SS HD	6
19	GA5006101	Bolt M10 x 65 ZP GR8.8	2
20	GA5000141	Nut M10 Nyloc ZP	2
21	GA5012203	Grease nipple, Short, 1/4" UNF	1
22	GA5052375	Hose Lay Flat 63mm Blue (cut 270mm long)	1
23	GA5000577	Washer 12mm Flat SS HD	6
24	GA5004919	Washer 8mm Spring SS	1
25	GA4522315	Washer, 27 ID x 40 OD x 2mm thick, SS	2

Boom Line Plumbing - RapidFire

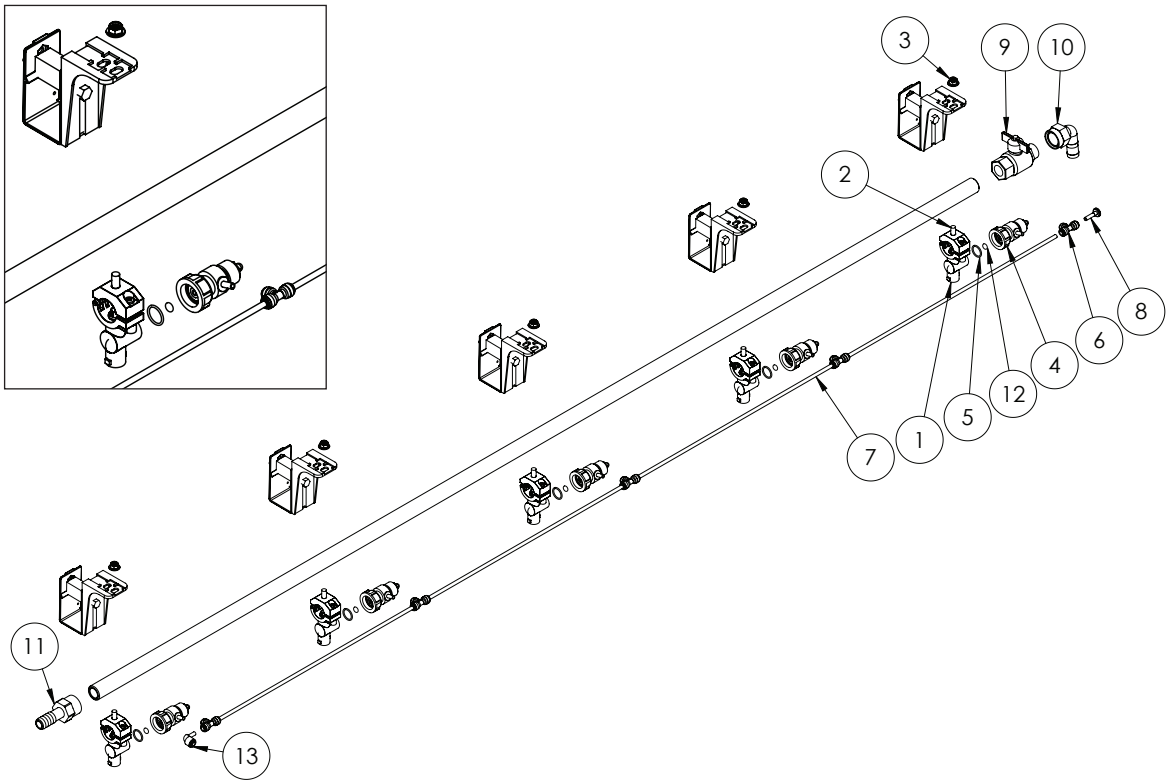

ITEM NO.	PART NUMBER	DESCRIPTION	QTY.
1	GA5077964	Nozzle body, Single, 3/4", Teejet	5
2	GA5052595	Bolt, M8 x 20, SS	5
3	GA5070710	Nut with flange, Plastic, M8 x 1.25	5
4	GA5065520	Spray Stop, RapidFire, Suit Teejet nozzle body, Altek	5
5	GA5053135	O-ring, 18 x 2mm, Viton, Suit spray stop body	5
6	GA5016245	Tee, Equal, 6mm push in type, Black plastic	5
7	GA5004383	Tube, Nylon, 6mm, Black	4
8	GA5004405	Plug, Push in, 6mm	1
9	GA5018315	Valve, Ball, 20mm male & female thread, Black Butterfly handle	1

Continued over page

Boom Line Plumbing - RapidFire

ITEM NO.	PART NUMBER	DESCRIPTION	QTY.
10	GA5077746	Hose barb, Elbow, 90 degree, 3/4" female thread x 3/4" hose	1
11	GA5077743	Hose barb, Straight, 3/4" female x 3/4" hose	1
12	GA5065521	O-ring, 6.02 x 2.62mm, Suits spray stop inner	5
13	GA5071215	Stem Elbow, suit 6mm air line, push in	1
-	GA5004385	Tube, Nylon, 6mm, Blue	-
-	GA5070585	Tube, Nylon, 6mm, Green	-

Boom Line Plumbing

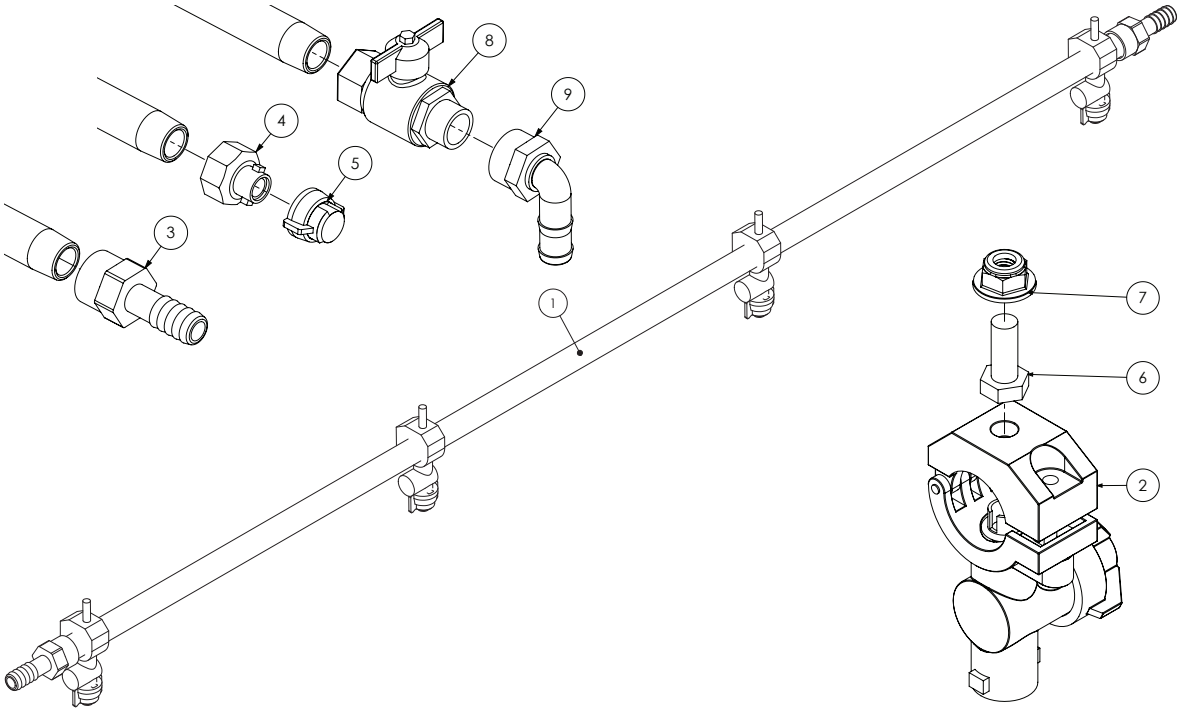

ITEM NO.	PART NUMBER	DESCRIPTION	QTY.
1	GA5018273	Boom line, Poly, 3/4", 1600mm long, No holes	#
	GA5018275	Boom line, Poly, 3/4", 2100mm long, No holes	#
	GA5018279	Boom line, Poly, 3/4", 2600mm long, No holes	#
	GA5018281	Boom line, Poly, 3/4", 3100mm long, No holes	#
2	GA5077964	Nozzle body, Single, 3/4", Teejet	#
3	GA5077743	Hose barb, Straight, 3/4" female x 3/4" hose, Banjo	#
4	GA5076904	Adapter, Boom flush, 3/4" female quick fitting	#
5	GA5076594	Nozzle shut off cap & washer, Teejet	#
6	GA5052595	Bolt, M8 x 20, SS	#
7	GA5070710	Nut with flange, Plastic, M8 x 1.25P	#
8	GA5018315	Valve, Ball, 20mm male & female thread, Black Butterfly handle	#
9	GA5077746	Hose barb, Elbow, 90 degree, 3/4" female thread x 3/4" hose	#

Quantities vary

Altek Dual Nozzle Spray Body

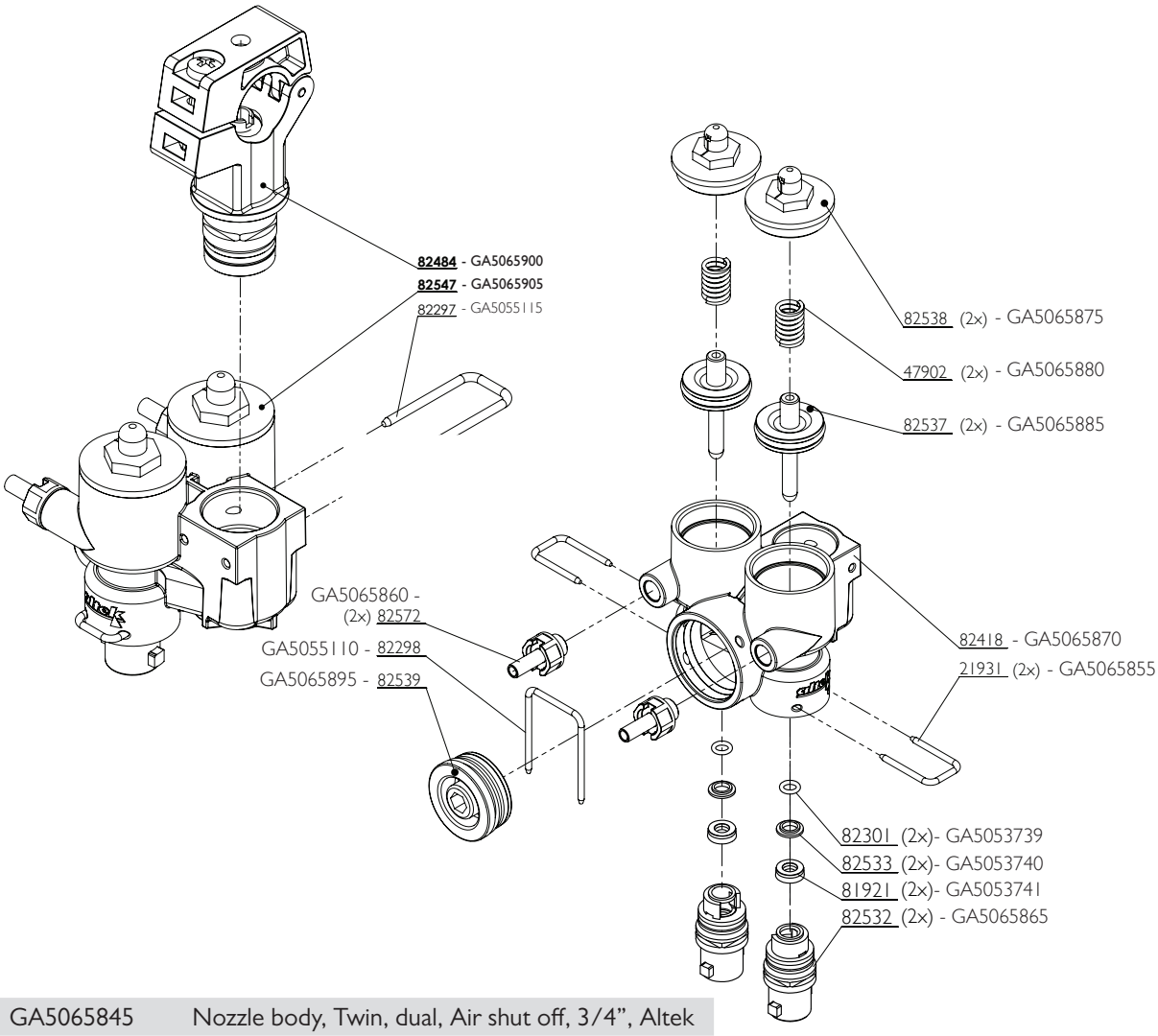

GA5065845	Nozzle body, Twin, dual, Air shut off, 3/4", Altek

PART NUMBER	DESCRIPTION	QTY.
GA5065900	Nozzle body clamp, 3/4", Altek	1
GA5065905	Lower body, Multi spray, Altek	1
GA5055115	U clip, 20 x 40 x 3mm	1
GA5065875	Top cap	2
GA5065880	Spring	2
GA5065885	Plunger	2
GA5065870	Outer body	1
GA5065855	U-Clip	2
GA5065865	Outlet, Valve inner, Nozzle body, Altek	2
GA5065860	Hose barb, Air fitting, 6mm hose, male thread, includes seal	2
GA5055110	U Clip 30 x 41 x 2.5mm	1
GA5065895	Shutoff Plug	1
GA5053739	O-ring, 5.6mm x 1.8mm FMP, suit GA5065845, Altek	2
GA5053740	Retaining disk, 11.8mm x 6.8mm x 2mm, suit GA5065845, Altek	2
GA5053741	Lip seal, 6mm x 12mm x 4.2mm FMP, suit GA5065845, Altek	2

Altek Spray Stop Spare Parts

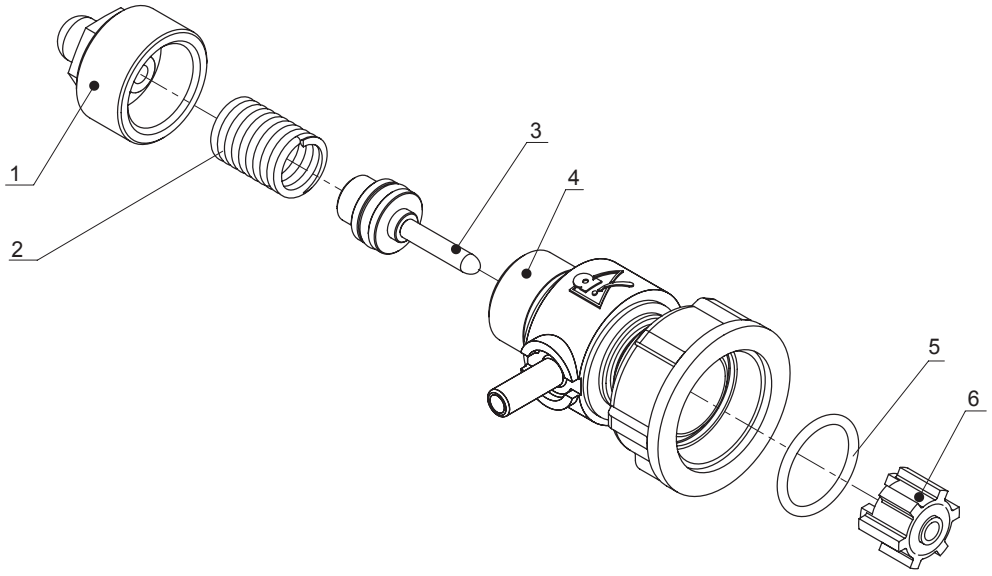

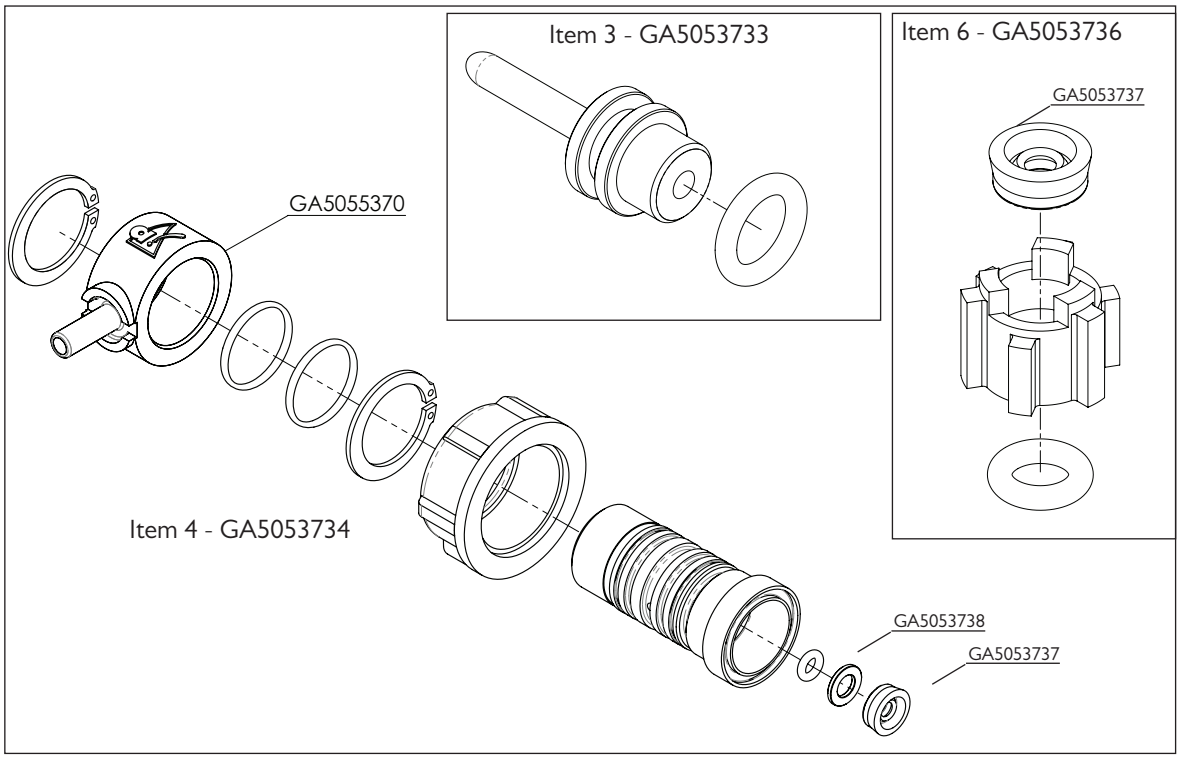

ITEM NO.	PART NUMBER	DESCRIPTION	QTY.
-	GA5065520	Spray Stop, RapidFire, Suit Teejet nozzle body, Altek	-
1	GA5053731	End Cap with Breather	1
2	GA5053732	Spring, 10 Bar	1
3	GA5053733	Piston	1
4	GA5053734	Valve Body	1
5	GA5053735	O-ring external	1
6	GA5053736	Plunger	1

Teejet Single Nozzle Body

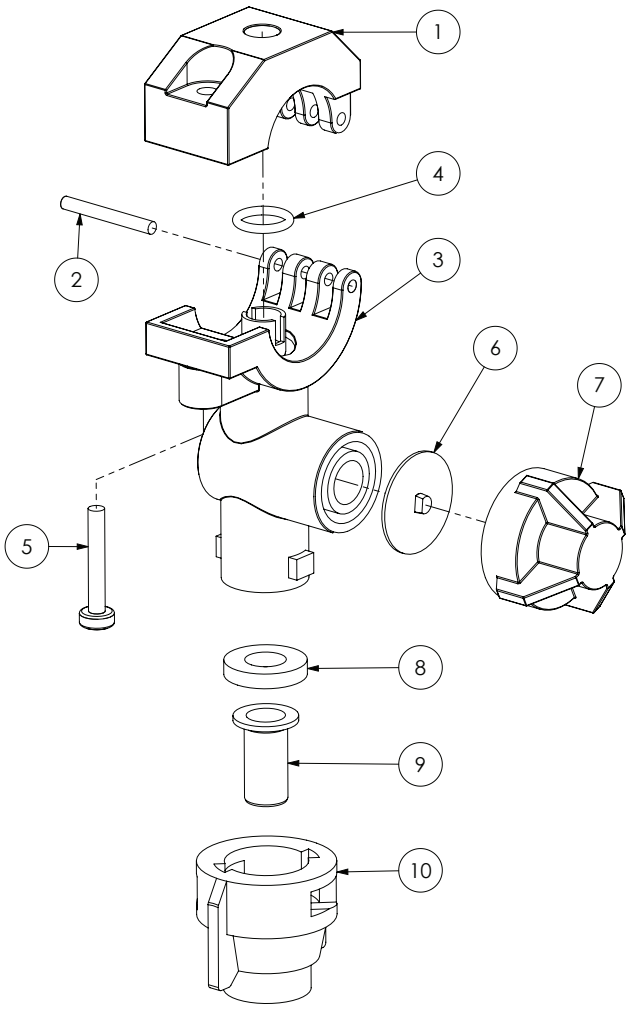

ITEM NO.	PART NUMBER	DESCRIPTION	QTY.
-	GA5077964	Nozzle body, Single, 3/4", Teejet	-
1	GA5077532	Clamp, Nozzle body, 3/4", Teejet	1
2	GA5077537	Pin, Nozzle body clamp, Teejet	1
3	GA5077538	3/4" Q.T.BODY with Clamp	1
4	GA5077596	O-ring, 14.5 x 2.5mm, Buna	1
	GA5077597	O-ring, Viton	
5	GA5077536	Screw, 13/16" x 1 1/4", SS	1
6	GA5077439	Chemsaver, Diaphragm, Teejet	1
	GA5077440	Diaphragm, Viton, Nozzle body check valve, Teejet	
7	GA5076670	Chemsaver, 10psi, Black, Teejet	1
8	GA5055245	Washer, Nozzle cap seal, Rubber, 19 OD x 9mm ID	1
9	GA5077159	Filter, Nozzle tip, Red, 50 mesh, Polypropylene & SS, Teejet	-
	GA5077160	Nozzle filter screen, Blue 80 mesh, Polyproylene / SS, Teejet	-
10	GA8100464	Nozzle cap, Nylon, Black, Teejet	-

Note: Only parts that are available through Goldacres are listed for the nozzle above. For a full parts listing, see the Teejet/Lechler website.

Teejet Turret Nozzle Body

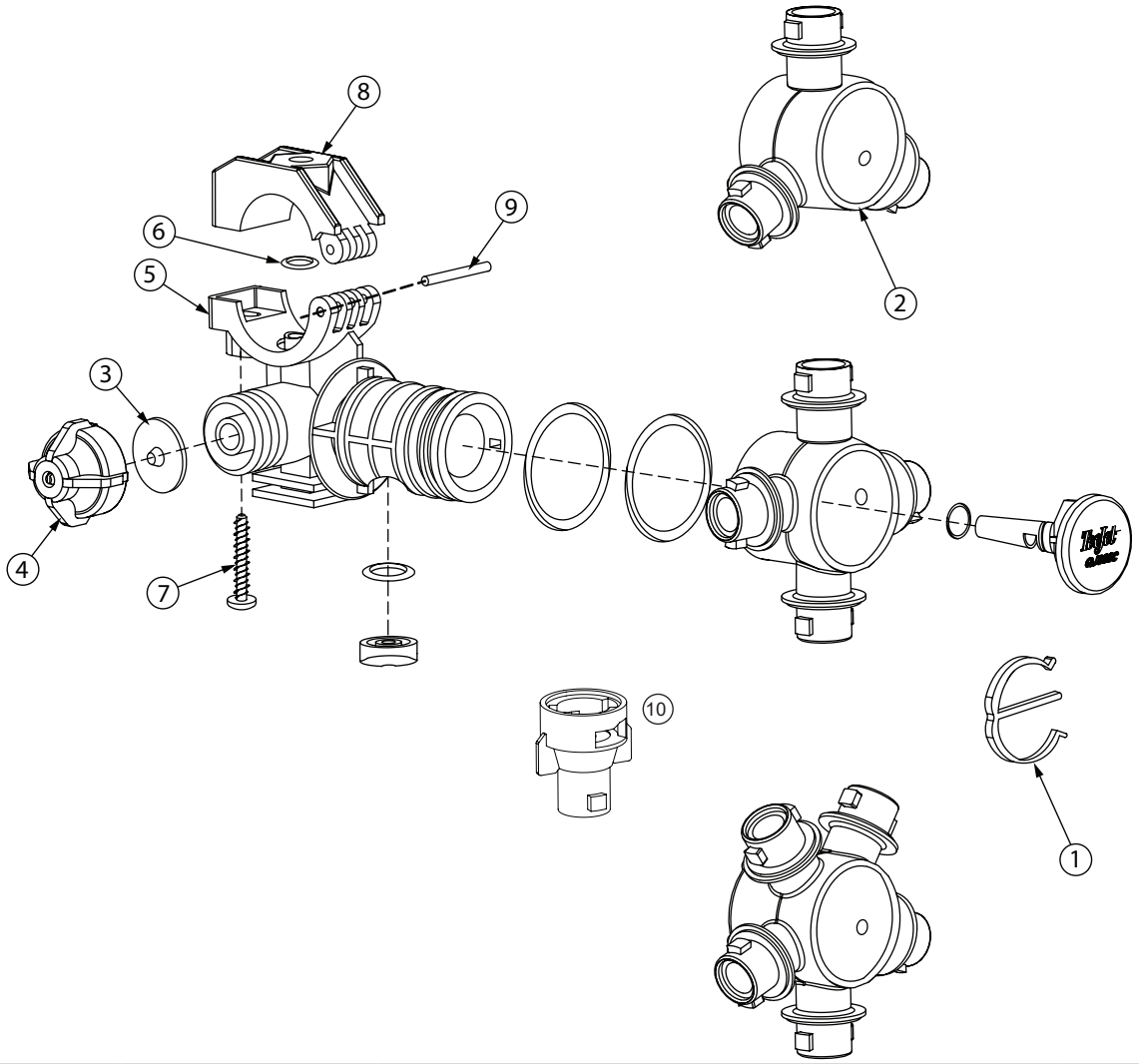

ITEM NO.	PART NUMBER	DESCRIPTION	QTY.
1	GA5077496	E clip, Nozzle body, Teejet	1
2	GA5077491	Nozzle body turret, 3 outlet clockface style, Teejet	1
	GA5077974	Nozzle body, Quad, Clockface, 3/4, Teejet	
	GA5077977	Nozzle body, Clockface, 5 outlet, 3/4, Teejet	
3	GA5077439	Chemsaver, Diaphragm, Teejet	1
	GA5077440	Diaphragm, Viton, Nozzle body check valve, Teejet	
4	GA5076670	Chemsaver, 10psi, Black, Teejet	1
5	GA5077493	3/4” 360C Body, Nylon	1
6	GA5077596	O-ring, 14.5 x 2.5mm, Buna	1
	GA5077597	O-ring, Viton	
7	GA5077536	Screw, 13/16” x 1 1/4”, SS	1
8	GA5077532	Clamp, Nozzle body, 3/4”, Teejet	1
9	GA5077537	Pin, Nozzle body clamp, Teejet	1
10	GA5077057	Nozzle body extension, Quick Teejet type, 1” long, Black, Teejet	1

Note: Only parts that are available through Goldacres are listed for the nozzle above. For a full parts listing, see the Teejet website.

Fence Line Nozzle - Manual Operated

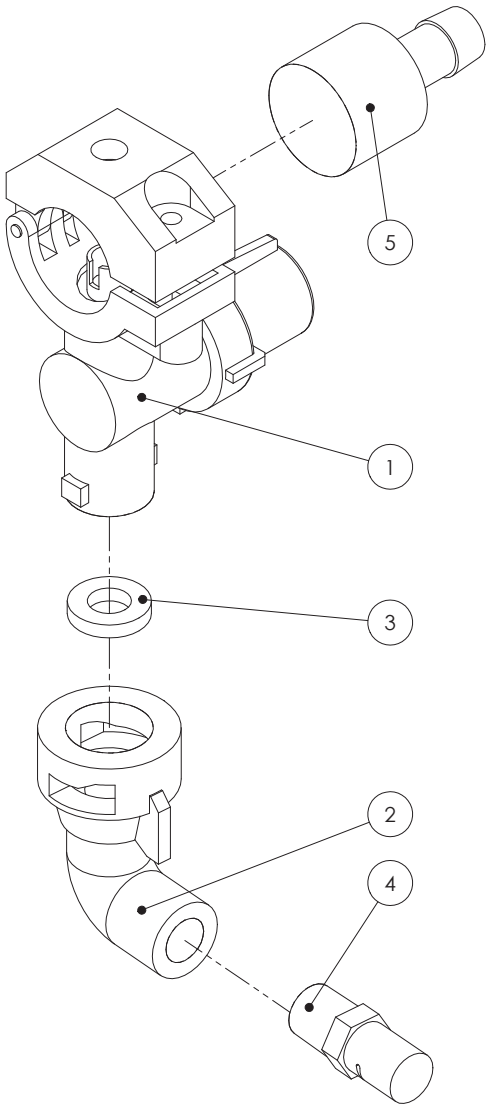

ITEM NO.	PART NUMBER	DESCRIPTION	QTY.
1	GA5077074	Chemsaver, Manual shutoff, Maximum 150psi pressure, Teejet	1
2	GA5077986	Nozzle cap & washer, 90 degree cap, 1/4" NPT female outlet	1
3	GA5055245	Washer, Nozzle cap seal, Rubber, 19 OD x 9mm ID	1
4	GA8100339	Nozzle, Fence line, Orange, Polymer, Left side, 1/4" NPT, Teejet	1
	GA8100340	Nozzle, Fence line, Orange, Polymer, Right side, 1/4" NPT, Teejet	1
5	GA5077497	Hose barb suit nozzle body, Single 1/2”, Nylon, Teejet	1

Fence Line Nozzle - Solenoid Operated

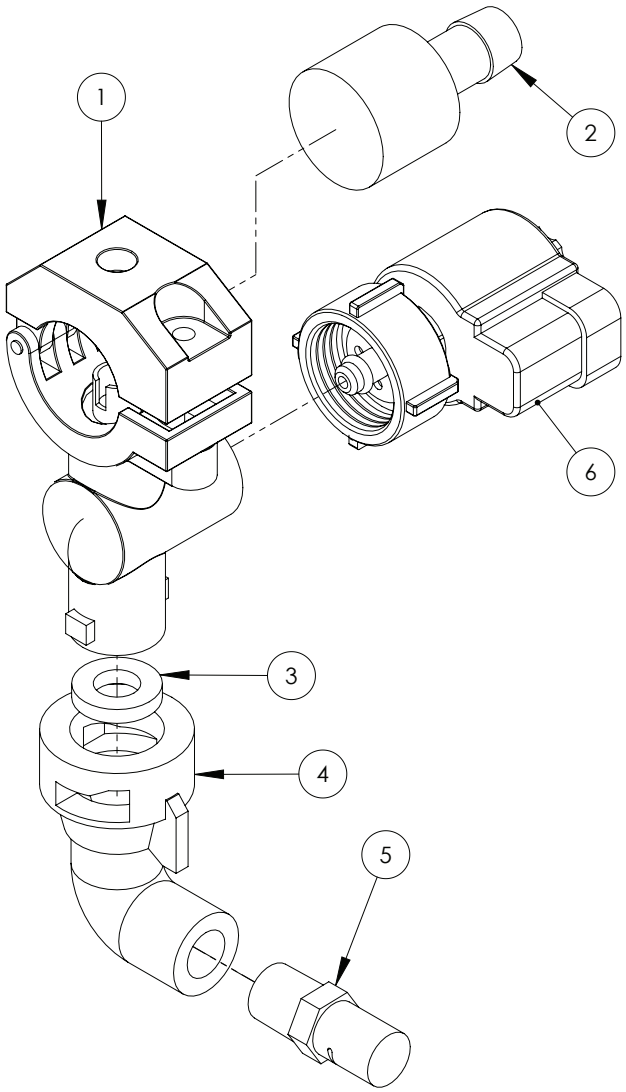

ITEM NO.	PART NUMBER	DESCRIPTION	QTY.
1	GA5077074	Chemsaver, Manual shutoff, Maximum 150psi pressure, Teejet	1
2	GA5077497	Hose barb suit nozzle body, Single 1/2", Nylon, Teejet	1
3	GA5055245	Washer, Nozzle cap seal, Rubber, 19 OD x 9mm ID	1
4	GA5077986	Nozzle cap & washer, 90 degree cap, 1/4" NPT female outlet	1
5	GA8100339	Nozzle, Fence line, Orange, Polymer, Left side, 1/4" NPT, Teejet	1
	GA8100340	Nozzle, Fence line, Orange, Polymer, Right side, 1/4" NPT, Teejet	1
6	GA5071785	Solenoid, e-Chemsaver suit 2 Pin Metri-pack, Fence Line	1

Adjustable Nozzle Bracket

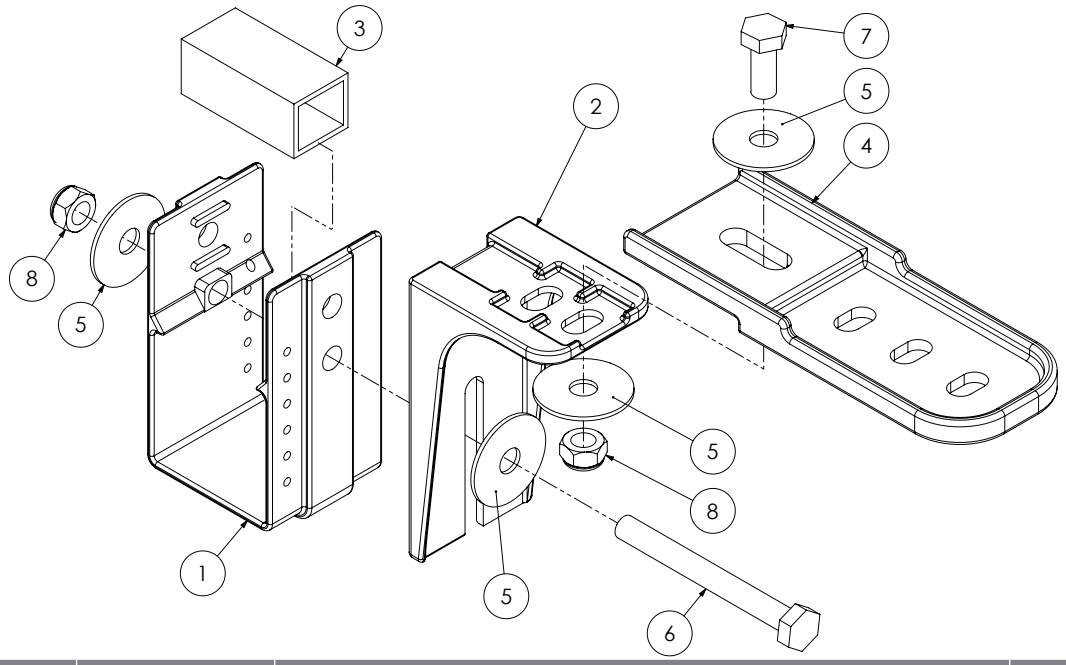

ITEM NO.	PART NUMBER	DESCRIPTION	QTY
1	GA5018259	Nozzle bracket, plastic, U shape	1
2	GA5018257	Nozzle bracket, plastic, L shape, short	1
	GA5018258	Nozzle bracket, plastic, L shape, long	
3	GA5066965	Spacer suit nozzle brackets	1
4	GA5018255	Bracket, Nozzle extension, Plastic	1
5	GA5003645	Washer 5/16" ID x 1 1/4" OD Flat SS	4
6	GA5004741	Bolt M8 x 75 GR8.8 ZP	1
7	GA5004085	Bolt M8 x 20 GR8.8 ZP	1
8	GA5004917	Nut M8 Nyloc ZP	2

Pre Packaged Kits

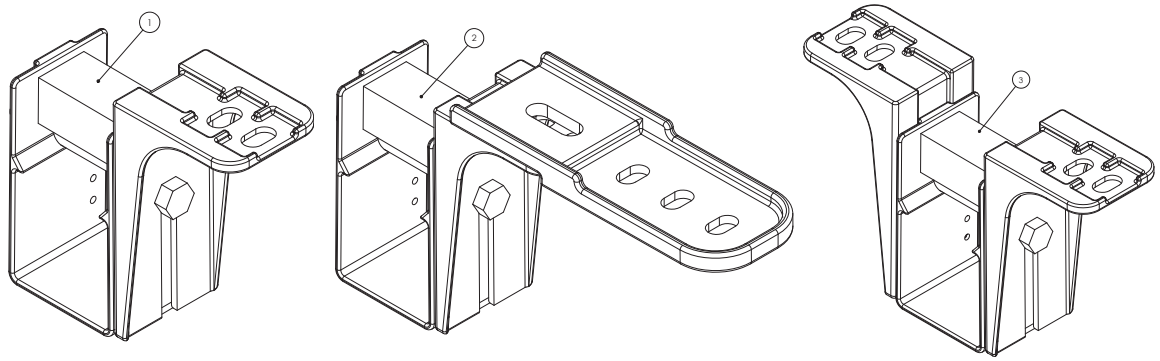

ITEM NO.	PART NUMBER	DESCRIPTION
1	GA4948675-SK	Nozzle bracket kit, Single line, Suit 50mm RHS
2	GA4948695-SK	Nozzle bracket kit, Single line with extension, Suit 50mm RHS
3	GA4948685-SK	Nozzle bracket kit, Dual line, Suit 50mm RHS

UltraGlide Sensor Mount

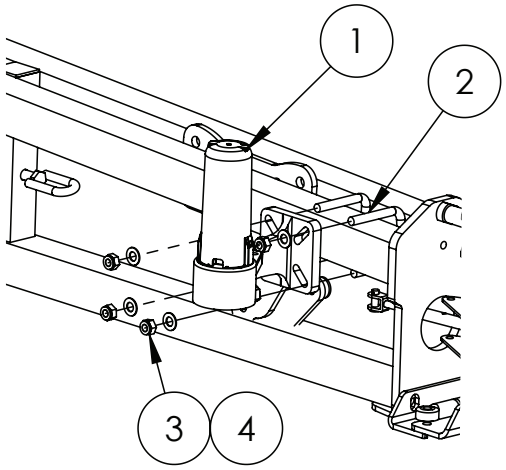

ITEM NO.	PART NUMBER	DESCRIPTION	QTY.
1	GA5075810	Sensor, Ultrasonic, Digital, 4 Pin, Centre, Raven	1
	GA5075809	Sensor, Ultraglide Moulded Left, Raven	1
	GA5075807	Sensor, Ultraglide Moulded Right, Raven	1
2	GA5011251	U bolt, Square top, M12 x 52mm x 80mm	6
3	GA5000117	Washer 10mm Flat SS HD	13
4	GA5000141	Nut M10 Nyloc ZP	12

Note: Quantity is for the 3 sensor kit

Boom Poly Pipe Clamps

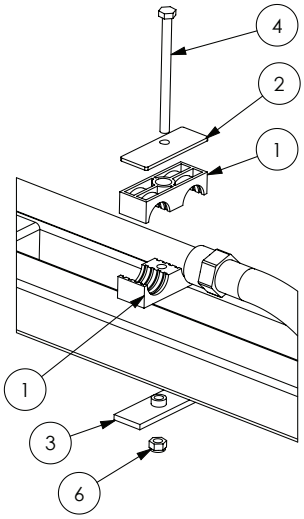

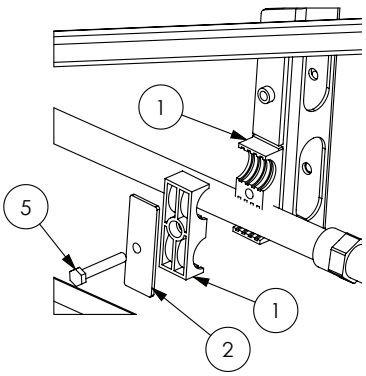

ITEM NO.	PART NUMBER	DESCRIPTION	QTY.
1	GA5078038	RCD clamp jaws, Double 28mm hose, Black polyproylene	#
2	GA5078049	Hose clamp, Double RCD, Top plate, Grade 4, Suit clamp 28-30	#
3	GA5078048	Double Clamp Plate Bottom Gr4	#
4	GA5004933	Bolt M8 x 110 ZP GR8.8	#
5	GA5004727	Bolt M8 x 50 ZP GR8.8	#
6	GA5052590	Nut M8 Nyloc SS	#

Quantities vary

Boom Poly - 600mm

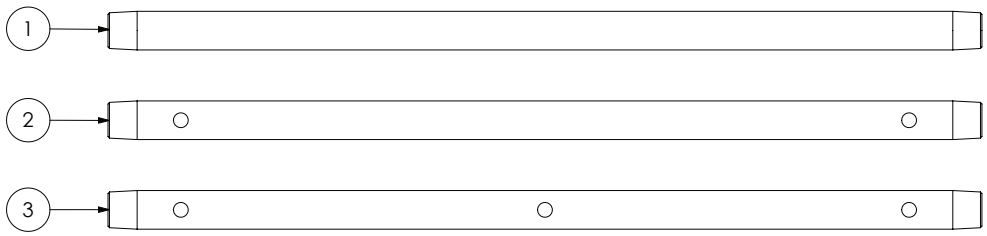

ITEM NO.	PART NUMBER	DESCRIPTION	QTY.
1	GA5018287	Boom line, Poly, 3/4", 600 long, No holes	1
2	GA2000510	Boom line, Poly, 3/4", 600 long, 2 holes, 500mm spacing	1
3	GA2000511	Boom line, Poly, 3/4", 600 long, 3 holes, 250mm spacing	1

Boom Poly - 1100mm

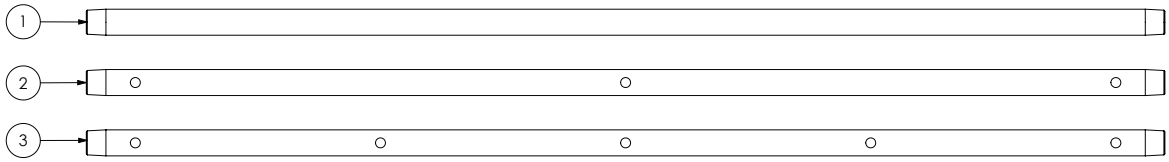

ITEM NO.	PART NUMBER	DESCRIPTION	QTY.
1	GA5018269	Boom line, Poly, 3/4", 1100 long, No holes	1
2	GA2000506	Boom line, Poly, 3/4", 1100 long, 3 holes, 500mm spacing	1
3	GA2000507	Boom line, Poly, 3/4", 1100 long, 5 holes, 250mm spacing	1

Boom Poly - 1200mm

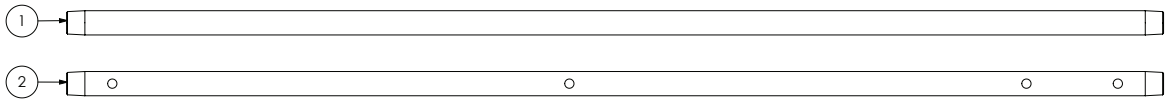

ITEM NO.	PART NUMBER	DESCRIPTION	QTY.
1	GA5018271	Boom line, Poly, 3/4", 1200 long, No holes	1
2	GA2000515	Boom line, Poly, 3/4", 1200 long, 3 holes plus fenceline, 500mm spacing	1

Boom Poly - 1600mm

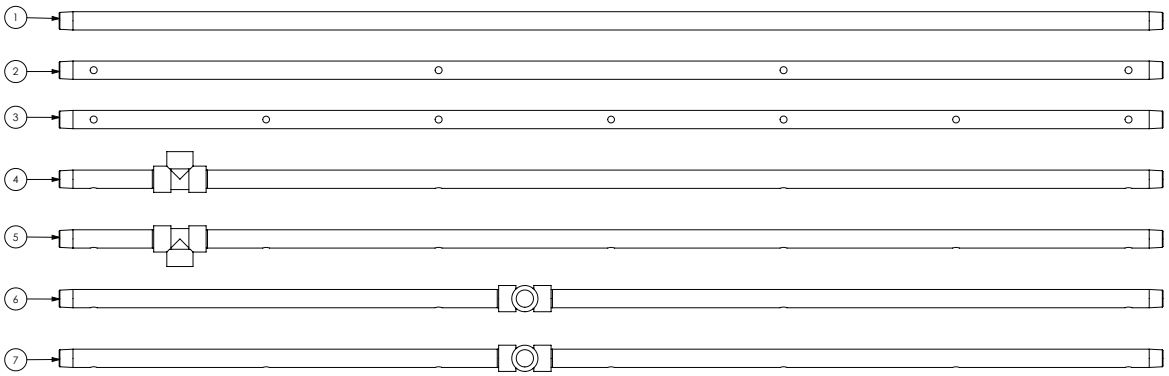

ITEM NO.	PART NUMBER	DESCRIPTION	QTY
1	GA5018273	Boom line, Poly, 3/4", 1600 long, No holes	1
2	GA2000500	Boom line, Poly, 3/4", 1600 long, 4 holes, 500mm spacing	1
3	GA2000501	Boom line, Poly, 3/4", 1600 long, 7 holes, 250mm spacing	1
4	GA2000520	Boom line, Poly, 3/4", 1600 long, 4 holes, 500mm spacing, Tee 175mm	1
5	GA2000521	Boom line, Poly, 3/4", 1600 long, 7 holes, 250mm spacing, Tee 175mm	1
6	GA2000522	Boom line, Poly, 3/4", 1600 long, 4 holes, 500mm spacing, Tee 675mm 90 Deg.	1
7	GA2000523	Boom line, Poly, 3/4", 1600 long, 7 holes, 250mm spacing, Tee 675mm 90 Deg.	1

Boom Poly - 2100mm

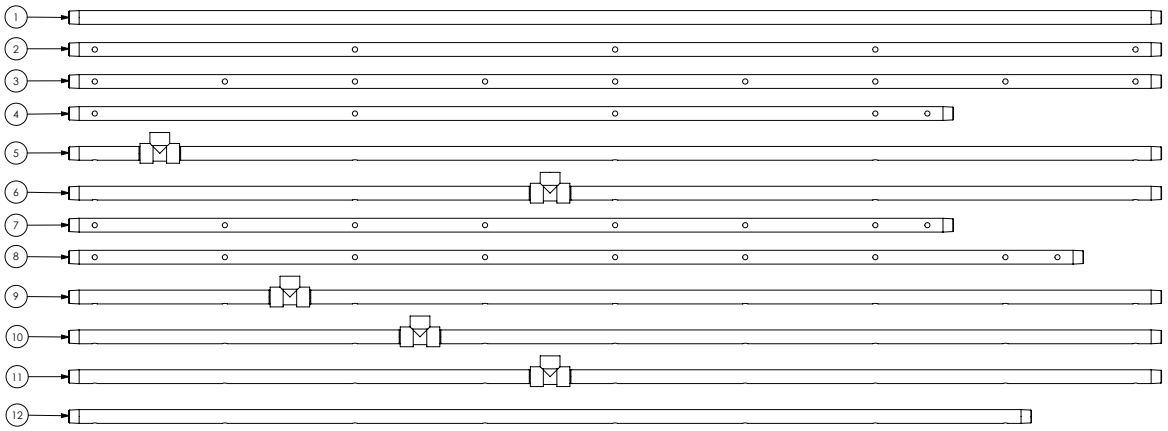

ITEM NO.	PART NUMBER	DESCRIPTION	QTY
1	GA5018275	Boom line, Poly, 3/4", 2100 long, No holes	1
2	GA2000502	Boom line, Poly, 3/4", 2100 long, 5 holes, 500mm spacing	1
3	GA2000503	Boom line, Poly, 3/4", 2100 long, 9 holes, 250mm spacing	1
4	GA2000525	Boom line, Poly, 3/4", 1700 long, 4 holes plus fenceline, 500mm spacing	1
5	GA2000526	Boom line, Poly, 3/4", 2100 long, 5 holes, 500mm spacing, Tee 175mm	1
6	GA2000527	Boom line, Poly, 3/4", 2100 long, 5 holes, 500mm spacing, Tee 925mm	1
7	GA2000530	Boom line, Poly, 3/4", 1700 long, 7 holes plus fenceline, 250mm spacing	1
8	GA2000531	Boom line, Poly, 3/4", 1950 long, 8 holes plus fenceline, 250mm spacing	1
9	GA2000532	Boom line, Poly, 3/4", 2100 long, 9 holes, 250mm spacing, Tee 425mm	1
10	GA2000533	Boom line, Poly, 3/4", 2100 long, 9 holes, 250mm spacing, Tee 675mm	1
11	GA2000534	Boom line, Poly, 3/4", 2100 long, 9 holes, 250mm spacing, Tee 925mm	1
12	GA2000535	Boom line, Poly, 3/4, 1850 long, 8 holes, 250mm spacing	1

Boom Poly - 2600mm

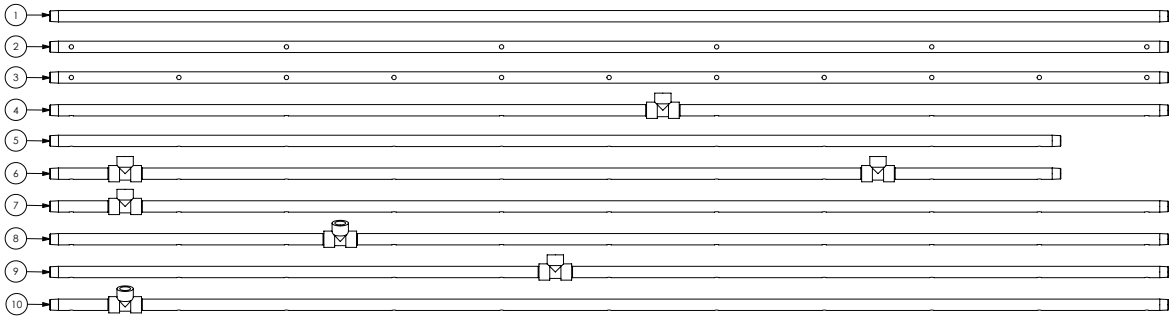

ITEM NO.	PART NUMBER	DESCRIPTION	QTY.
1	GA5018279	Boom line, Poly, 3/4", 2600 long, No holes	1
2	GA2000504	Boom line, Poly, 3/4", 2600 long, 6 holes, 500mm spacing	1
3	GA2000505	Boom line, Poly, 3/4", 2600 long, 11 holes, 250mm spacing	1
4	GA2000540	Boom line, Poly, 3/4", 2600 long, 6 holes, 500mm spacing, Tee 1175mm	1
5	GA2000541	Boom line, Poly, 3/4", 2350 long, 10 holes, 250mm spacing	1
6	GA2000542	Boom line, Poly, 3/4", 2600 long, 10 holes, 250mm spacing, Tee 175mm & 1925mm	1
7	GA2000543	Boom line, Poly, 3/4", 2600 long, 11 holes, 250mm spacing, Tee 175mm	1
8	GA2000544	Boom line, Poly, 3/4", 2600 long, 11 holes, 250mm spacing, Tee 675mm angled	1
9	GA2000545	Boom line, Poly, 3/4", 2600 long, 11 holes, 250mm spacing, Tee 1175mm	1
10	GA2000546	Boom line, Poly, 3/4", 2600 long, 11 holes, 250mm spacing, Tee 175mm angled	1

Boom Poly - 3100mm

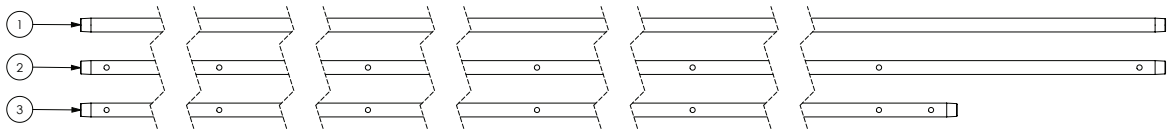

ITEM NO.	PART NUMBER	DESCRIPTION	QTY.
1	GA5018281	Boom line, Poly, 3/4", 3100 long, No holes	1
2	GA2000508	Boom line, Poly, 3/4", 3100 long, 7 holes, 500mm spacing	1
3	GA2000550	Boom line, Poly, 3/4", 2700 long, 6 holes, 500mm spacing	1

Chapter 15

ELECTRICS

Lighting - Boom Tip LEDs

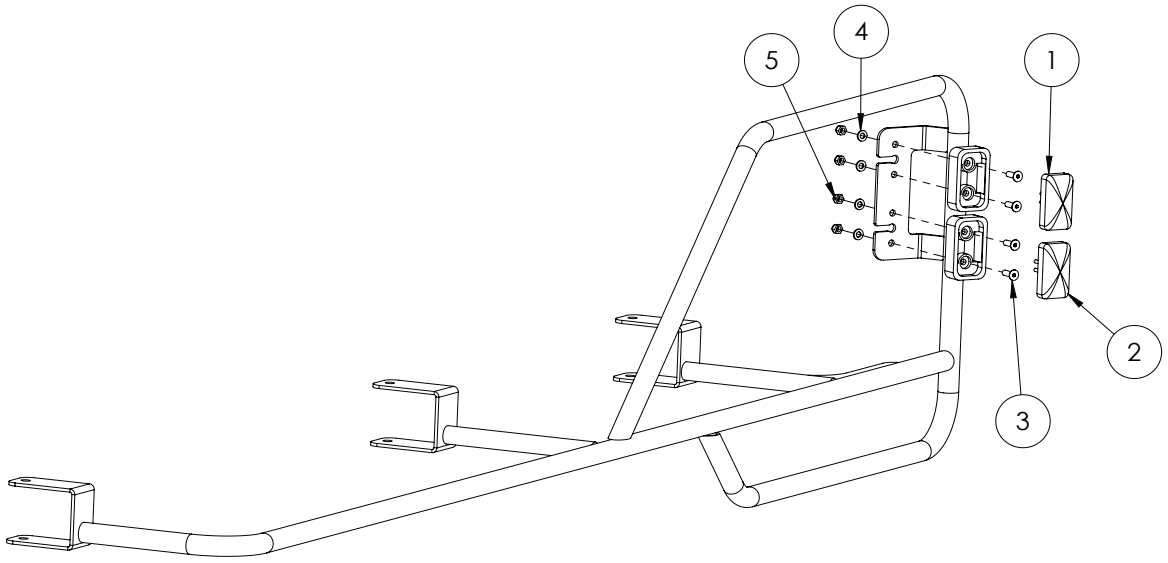

ITEM NO.	PART NUMBER	DESCRIPTION	QTY.
1	GA5060057	Clearance light with connector, Orange LED	1
2	GA5060056	Clearance light with connector, Red LED	1
3	GA5051230	CSCS M5 x 16 SS A2-70	4
4	GA5003983	Washer 5mm Flat SS	4
5	GA5003975	Nut M5 Nyloc SS	4

Lighting - Tail Light & Beacon

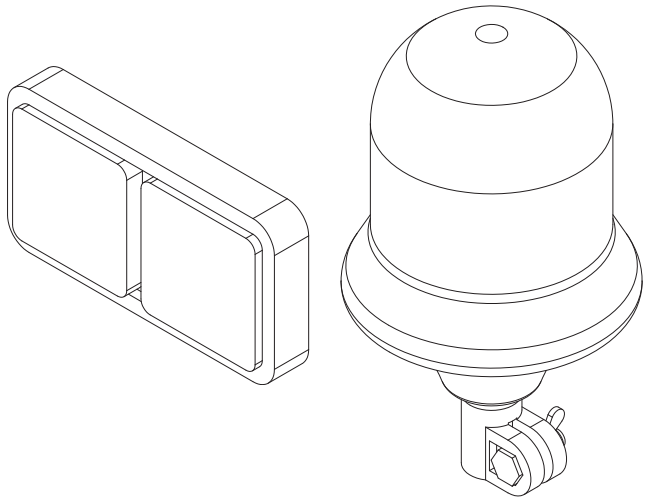

PART NUMBER	DESCRIPTION
GA5018786	Lamp, LED, 12V, Brake / tail light / indicator, 190 x 100mm
GA5048975	Beacon, Rotating, Amber, DIN A pole mount, H1 globe

Lighting - POD Work Light

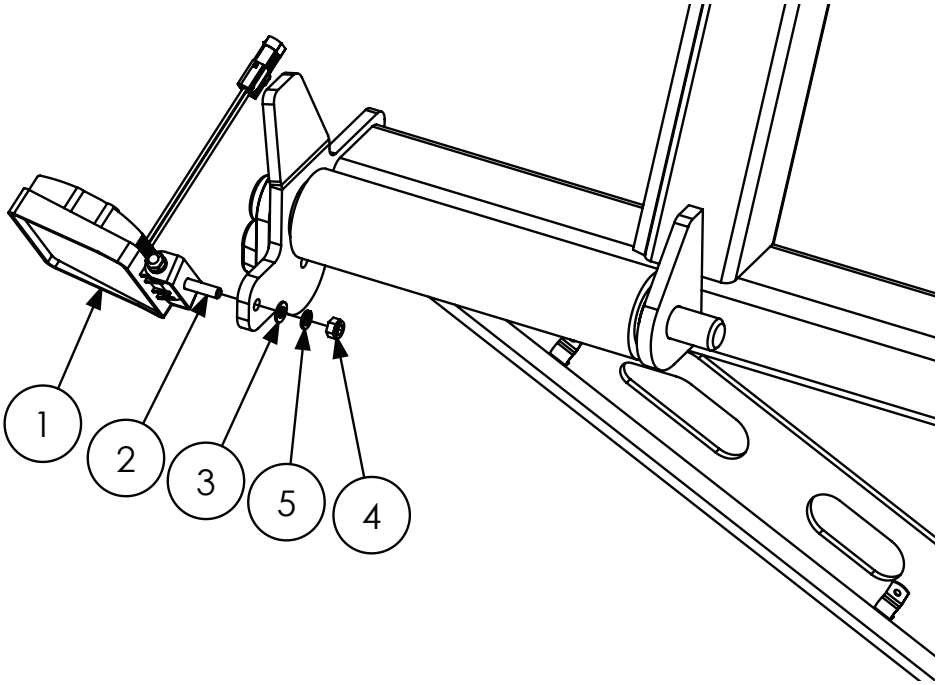

ITEM NO.	PART NUMBER	DESCRIPTION	QTY.
1	GA5075500	Light, LED, Work, Flood beam, bare wires, 15W	1
	GA4913495	Light, Pod Work Light Assembly, LED, Flood Beam	
2	GA5011477	Set Screw M8 x 30 ZP GR8.8	1
3	GA5003643	Washer 8mm Flat SS HD	1
4	GA5052590	Nut M8 Nyloc SS	1
5	GA5004919	Washer 8mm Spring SS	1

Lighting - Boom Lights

Chassis cut down rear view

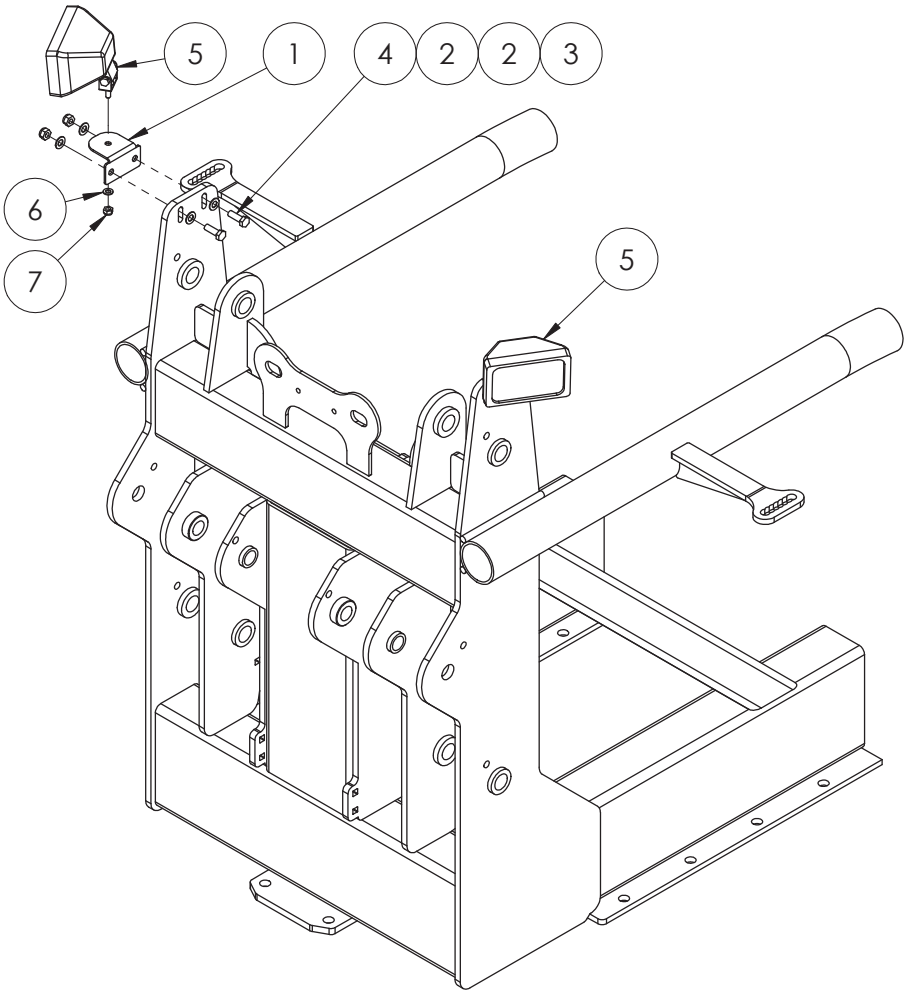

ITEM NO.	PART NUMBER	DESCRIPTION	QTY.
1	GA4522570	Bracket boom light mounting suit EF	2
2	GA5000117	Washer 10mm Flat SS HD	8
3	GA5000141	Nut M10 Nyloc ZP	4
4	GA5065455	Bolt M10 x 30 ZP GR8.8	4
5	GA5050105	Light, work, flood stringray 138 x 82mm, bare wires	2
6	GA5003643	Washer 8mm Flat SS HD	2
7	GA5051700	Nut 5/16" UNC Nyloc ZP	2

Lighting - Night Pro LEDs

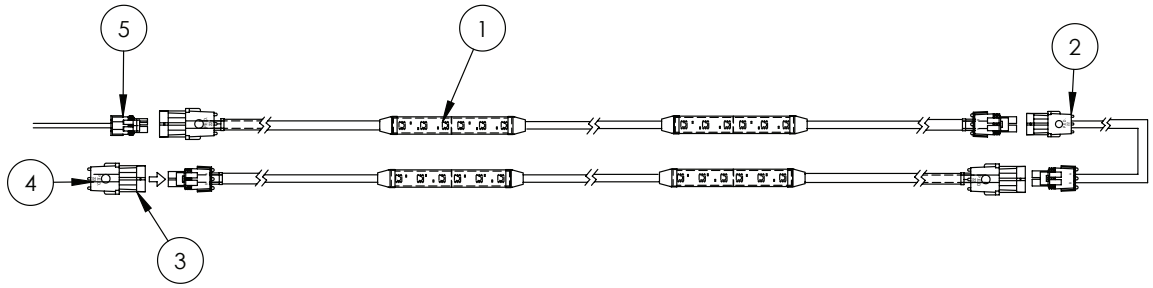

ITEM NO.	PART NUMBER	DESCRIPTION	QTY.
1	GA5060136	Harness, Boom Light 2 LED Strip, 12v 0.24Amp	36
2	GA5060137	Harness, Pivot Extension 2000mm	4
	GA5060138	Harness, Pivot Extension 5000mm	-
3	GA5007381	Connector, 2 pin, Female, Weather pack	4
4	GA5050245	Seal, Cavity blanking plug, Weather pack connector	8
5	GA3000016	Harness, Quad splitter, suit night pro power supply The quantity shown is for a full 36 meter boom	1

Electrical Components

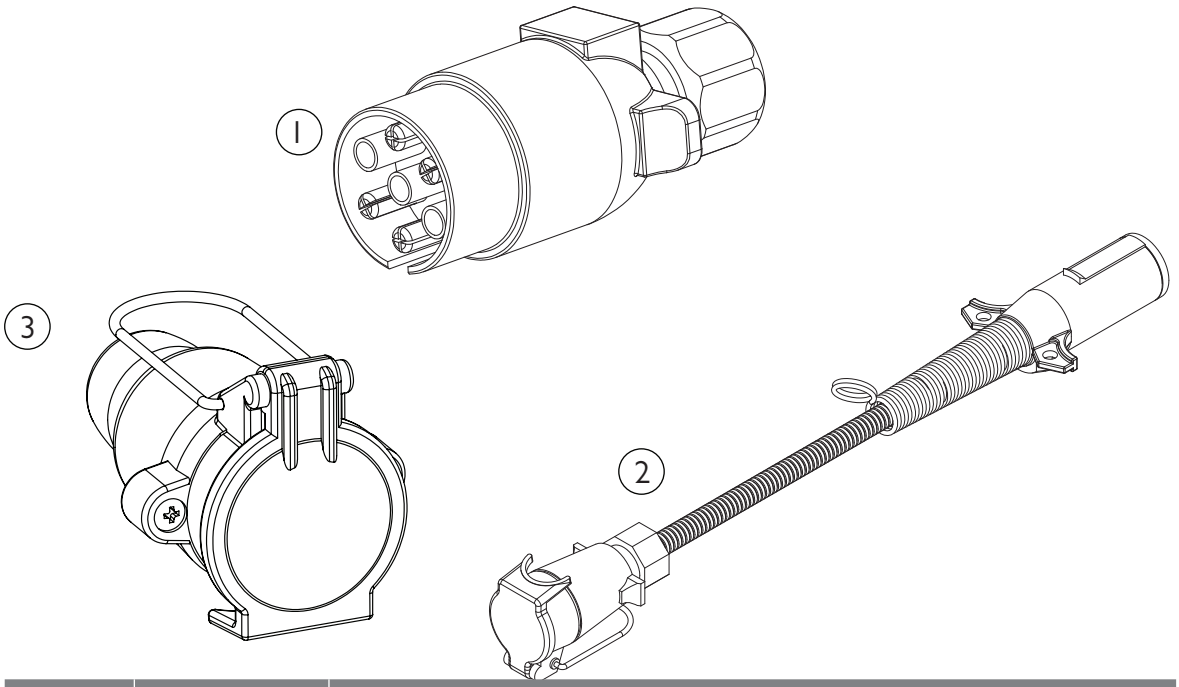

ITEM NO.	PART NUMBER	DESCRIPTION
1	GA5004477	Plug, 7 pin trailer type, Male, Plastic
2	GA5060350	Electrical harness, Adaptor, 7 pin female trailer plug to North American style male trailer plug
3	GA5004479	7 Pole Remote Base

Electrical Connectors - AMP

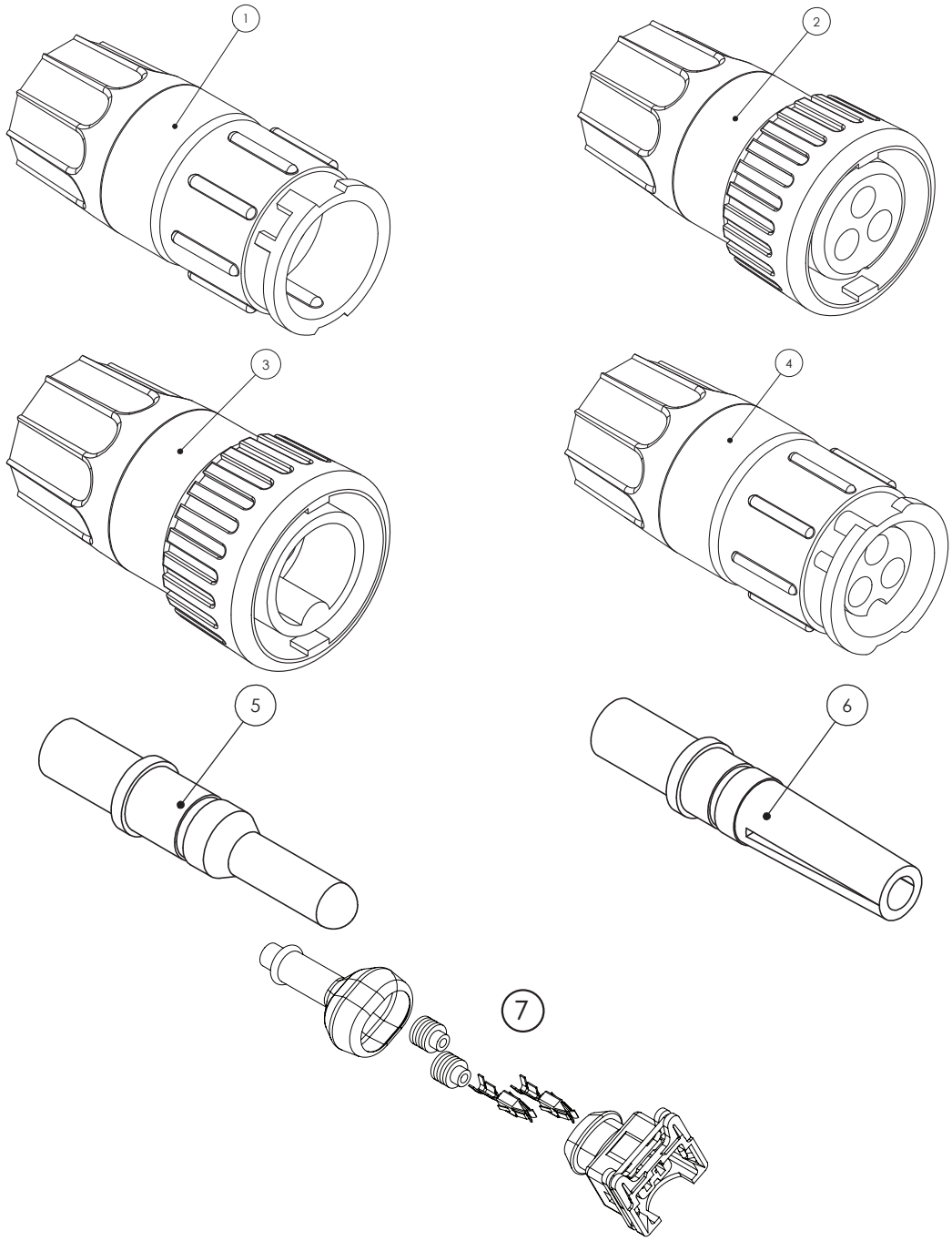

ITEM NO.	PART NUMBER	DESCRIPTION
1	GA5076921	Connector, 3 Pin kit, Flow Meter, Including Male Pins, Raven
2	GA5076922	Connector, 3 Pin kit, Flow Meter, Including Female Pins, Raven
3	GA5076920	Connector, 3 Pin Kit, Speed Sensor, including Male Pins, Raven
4	GA5076923	Connector, 3 Pin kit, Speed Sensor, Including Female Pins, Raven
5	GA5076927	Pin, 16-20 Gauge, Male, Suit Speed Sensor - Flow Meter, Raven
6	GA5076928	Pin, 16-20 Gauge, Female, Suit Speed Sensor - Flow Meter, Raven
7	GA5047728	Plug, 2 pin, Black, fuel injector connector, IP65K, AMP
-	GA5068945	Connector, 3 Pin AMP super seal waterproof male

Electrical Connectors - AMP

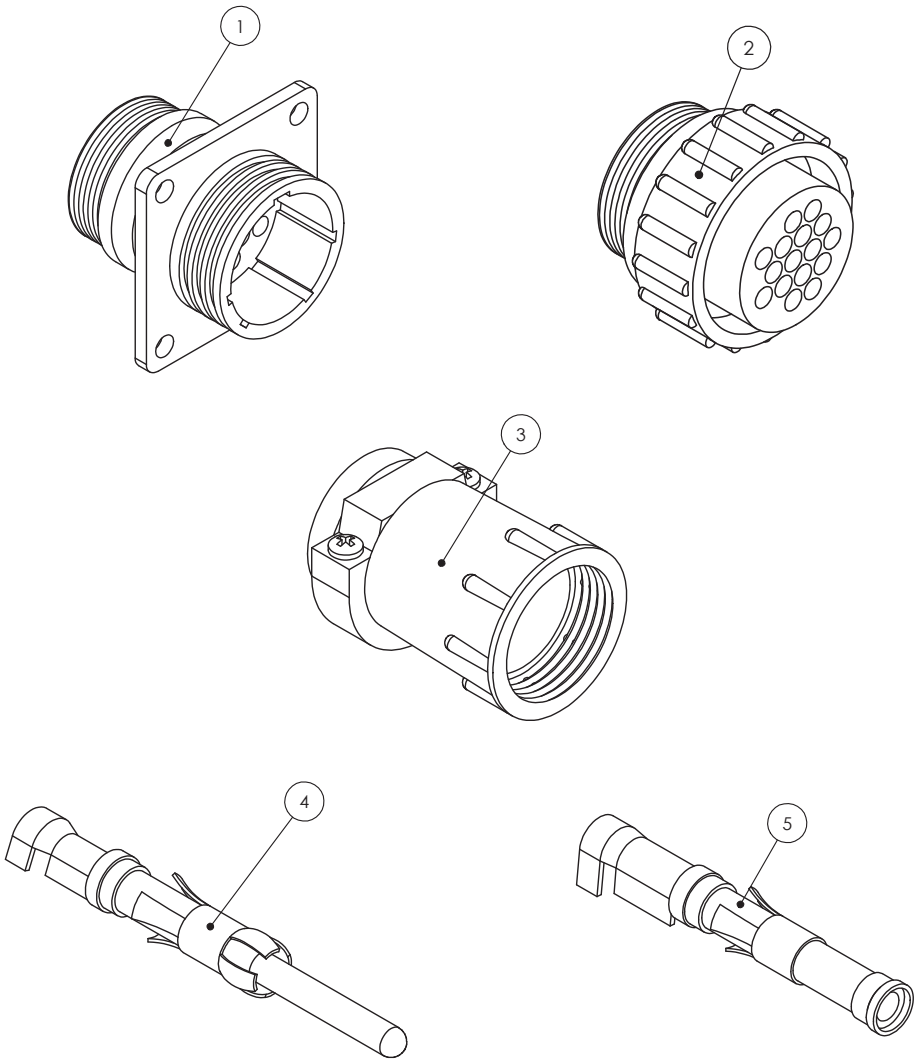

ITEM NO.	PART NUMBER	DESCRIPTION
1	4084001017	Connector, 16 Pin AMP, Square Flange, Suit Male Pins, Raven
2	4084001018	Connector, 16 Pin AMP, Suit Female Pins, Raven
3	GA5049175	Connector, Backing Shell, Suit 16 Pin AMP, Raven
4	GA5048905	Pin, 14-18 Gauge Gold, Male, Suit 16 Pin AMP
5	GA5048900	Pin, 14-18 Gauge Gold, Female, Suit 16 Pin AMP
-	GA5020785	Connector, 37 Pin AMP, Male, Raven
-	GA5020780	Connector, 37 Pin AMP, Female
-	GA5020560	Connector, Backing Shell 23, Suit 37 Pin AMP, Standard size
-	GA5020559	Connector, Backing Shell 23, Suit 37 Pin AMP, Large size
-	GA5020561	Connector Dust Cap, 37 Pin AMP, Male, Raven
-	GA5020575	Dust Cap, 16 Pin AMP Connector, Male
-	0630171042-E	Dust Cap, 16 Pin AMP Connector, Female
-	0630172526-B	DustCap 37 Pin Series 23 (4000 series Connector Dust Cap, 37 Pin AMP, Series 23, Raven

Electrical Connectors - Weather Pack

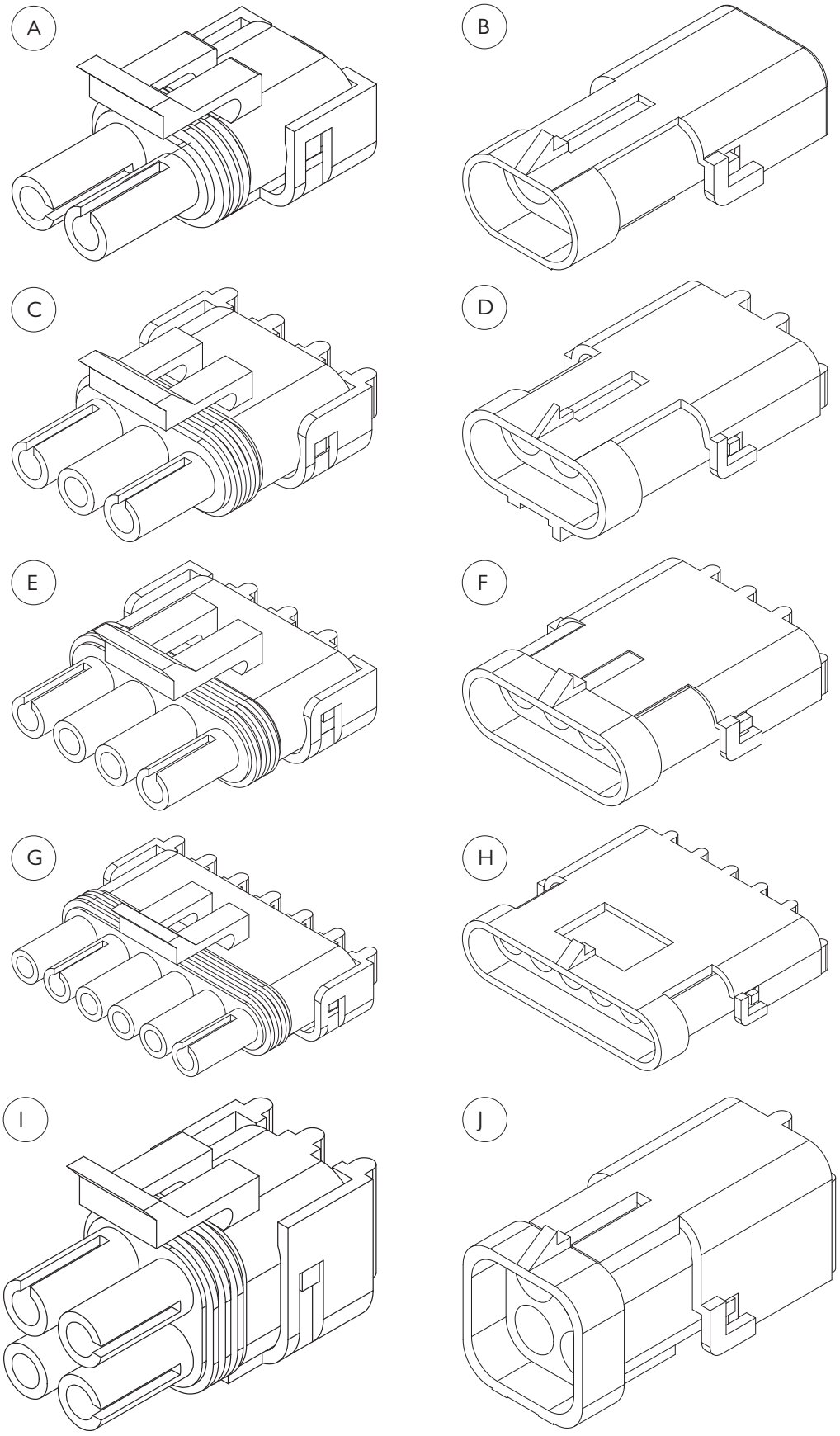

Electrical Connectors - Weather Pack

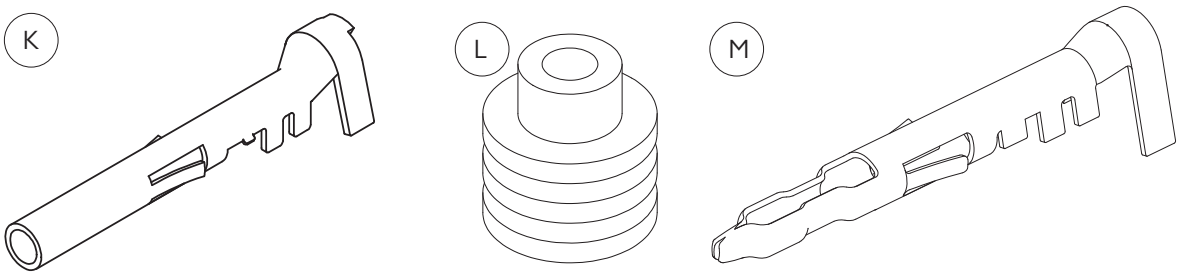

ITEM NO.	PART NUMBER	DESCRIPTION
A	GA5001351	Connector, Male, 2 Pin, Weather pack
B	GA5007381	Connector, 2 pin, Female, Weather pack
C	GA5002211	Connector, Male, 3 pin, Weather pack
D	GA5048550	Connector, Female, 3 Pin, Weather pack
E	GA5007385	Connector, Male, 4 pin, Weather pack
F	GA5007383	Connector, Female, 4 pin, Flat, Weather pack
G	GA5004009	Connector, Male, 6 pin, Weather pack
H	GA5048510	Connector, Female, 6 pin, Weather pack
I	GA5049000	Connector, Female, 4 pin, Square, Weather pack
J	GA5050805	Connector, Male, 4 pin, Square, Weather pack
K	GA5016619	Pin, Female, Sealed, Weather pack, Wire 1.0 - 2.0mm
L	GA5014857	Seal, Green, Weather pack connector, Wire from 2.03 - 2.85mm
M	GA5016617	Pin, Male, Sealed, Weather pack, Wire 1.0 - 2.0mm
-	GA5049685	Boot, Weather pack, Suit 2 pin connector
-	GA5049690	Boot, Weather pack, Suit 3 pin connector

Electrical Connectors - Din Hirschmann

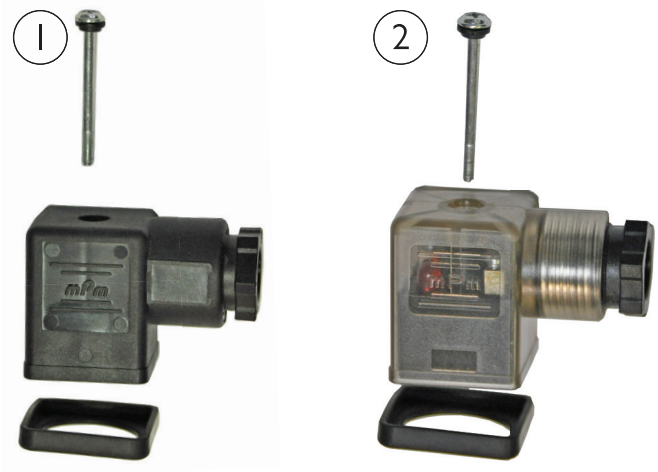

ITEM NO.	PART NUMBER	DESCRIPTION
1	GA5048580	Din Hirschmann Connector K4L12 LED.
2	GA5010039	Din Hirschmann Connector Std Black suit CeTop 3

Electrical Connectors - Deutsch

Deutsch Part Number Key

HD 34/36 - 18/24 - 14/24/47 - PN/SN

- Series
- 34- Jam Nut Type, 36- Screw Type
- Shell Size
- Number of Pins
- PN- Pins, SN- Sockets

ITEM NO.	PART NUMBER	DESCRIPTION
A	GA5061225	16GA Female Deutsch Socket
B	GA5061270	12GA Female Deutsch Socket

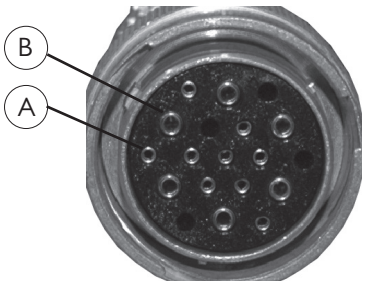

ITEM NO.	PART NUMBER	DESCRIPTION
A	GA5061240	16GA Male Deutsch Pin
B	GA5061260	12GA Male Deutsch Pin

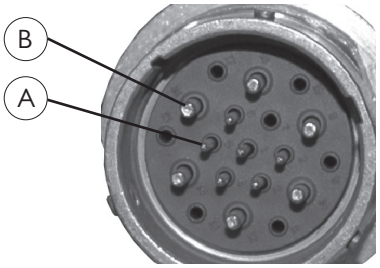

Electrical Connectors - Deutsch

ITEM NO.	PART NUMBER	DESCRIPTION
A	GA5002671	HD34-18-14PN Connector
B	GA5002675	HD34-24-21PN Connector

ITEM NO.	PART NUMBER	DESCRIPTION
A	GA5002663	HD36-18-14SN Connector
B	GA5002655	HD36-24-21SN Connector

PART NUMBER	DESCRIPTION
GA5062635	HD34-24-47-PE Connector(47 Socket)
GA5061225	Small Male Socket
GA5061260	Large Male Socket

PART NUMBER	DESCRIPTION
GA5062640	HD36-24-47-SE-059 Connector(47 Pin)
GA5061210	Small Female Pin
GA5061230	Large Female Pin

PART NUMBER	DESCRIPTION
GA5021310	HD36-24-19SN-059 Connector (19 socket)

PART NUMBER	DESCRIPTION
GA5021315	HD34-24-19PN Connector (19 pin)

Electrical Connectors - Deutsch

PART NUMBER	DESCRIPTION
GA5020920	Plug for size 24 Connector with External Thread on Plug
GA5020910	Plug for size 18 Connector with External Thread on Plug

PART NUMBER	DESCRIPTION
GA5020925	Plug for size 24 Connector with External Thread on Connector
GA5020915	Plug for size 18 Connector with External Thread on Connector

ITEM NO.	PART NUMBER	DESCRIPTION
A	GA5012399	Connector Lock Nut suit 24 shell
	GA5009887	Connector Lock Nut suit 18 shell
B	GA5017621	Connector Lock Washer suit 24 shell
	GA5009893	Connector Lock Washer suit 18 shell

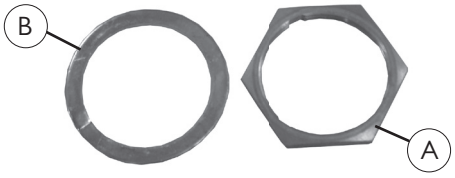

ITEM NO.	PART NUMBER	DESCRIPTION
A	GA5013783	Housing (4 Pin)
B	GA5061240	Pin
C	GA5050765	Lock Wedge

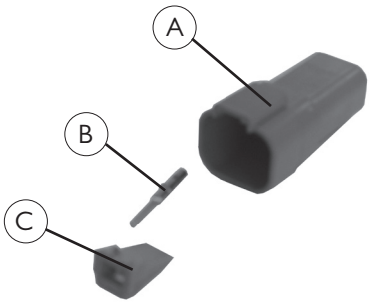

Electrical Connectors - Deutsch

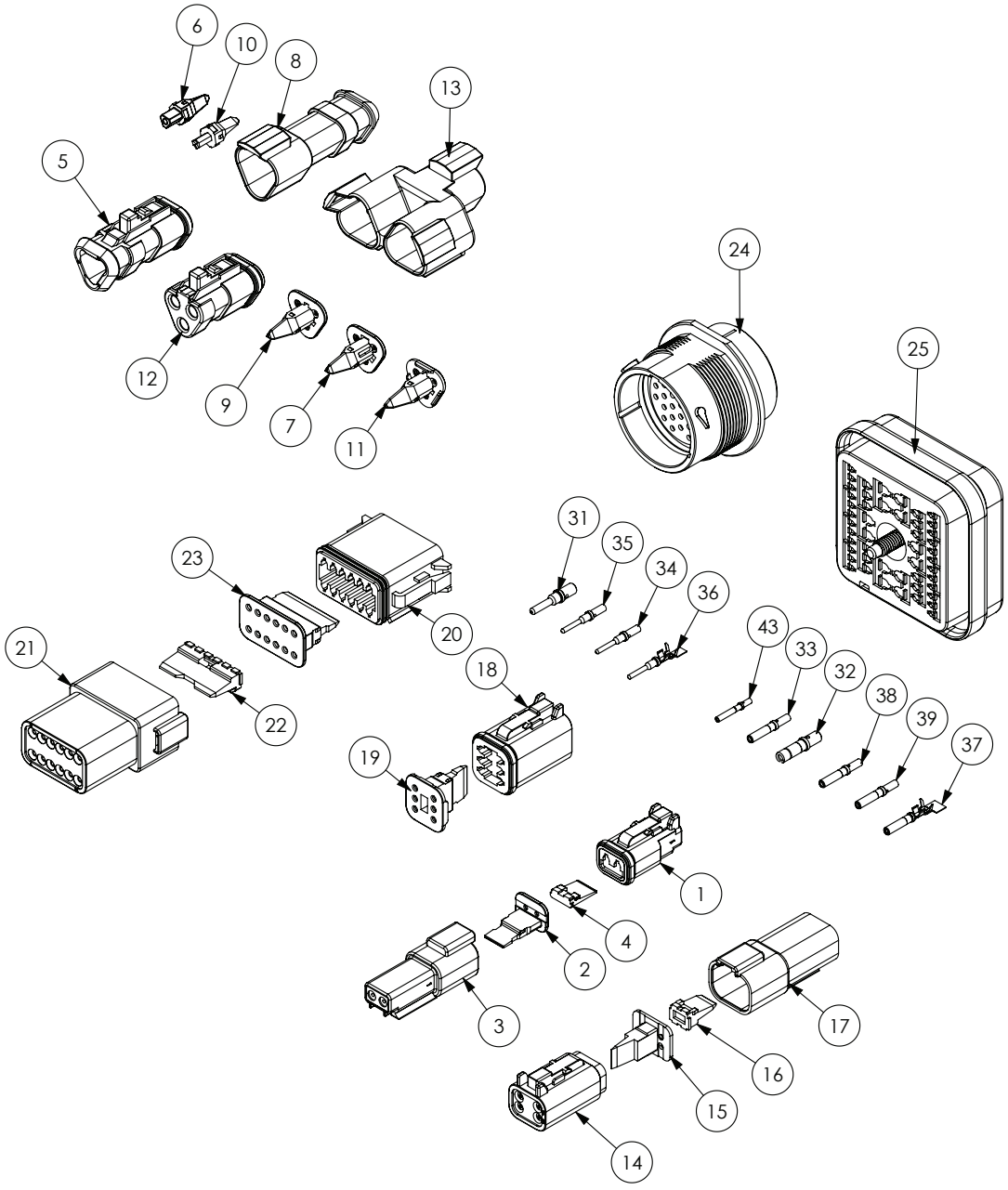

ITEM NO.	PART NUMBER	DESCRIPTION
1	GA5052820	Plug, 2 way, socket, DT series
2	GA5052825	Wedge Lock, 2 Way, sockets, DT series
3	GA5052830	Receptacle, 2 way, pins, DT series
4	GA5052835	Wedge Lock, 2 way, DT series
5	GA5011831	Plug, 3 way sockets, shrink boot adapter
6	GA5017719	Wedge lock, blue, 3 pin, suit terminator
7	GA5017721	Wedge lock, blue, 3 socket
8	GA5050740	Receptical, 3 pin, shrink boot
9	GA5050750	Wedge Lock, orange, 3 socket

Continued over page

Electrical Connectors - Deutsch

ITEM NO.	PART NUMBER	DESCRIPTION
10	GA5050760	Wedge Lock, Green, 3 pin
11	GA5050761	Wedge Lock, Green, 3 socket
12	GA5054350	Plug, grey, 120 ohm resistor terminator
13	GA5054365	Receptacle, 3 way 3 Pin, Y splitter
14	GA5050840	Plug, 4 way socket, DT series
15	GA5050845	Wedge Lock, orange, 4 way sockets
16	GA5050765	Wedge Lock, Green, 4 Way pins
17	GA5013783	Receptacle, 4 way, pins, DT series
18	GA5050960	Plug, 6 way Socket, DT series
19	GA5050965	Wedge Lock, orange, 6 way sockets, DT series
20	GA5061780	Plug, 12 way sockets, DT series
21	GA5061785	Receptacle, 12 way suit pins, DT series
22	GA5070590	Wedge lock, green, 12 way suit pins
23	GA5070595	Wedge lock, Green, 12 way sockets
24	GA5061790	Receptacle, 31 pin, HPD series
25	GA5060440	Plug, 48 Pin suits Pins, DRB series
26	GA5060445	Wedge lock, 48 way suits Pins, DRB series
27	GA5060450	Flange connector, 48 way suits DRB series
28	GA5060455	Wedge lock, 48 way suit, Sockets, DRB series
29	GA5060460	Plug, 48 Pin suits Sockets, DRB series
30	GA5061170	Rubber boot, suit 48 pin DRB series
31	GA5061260	Pin, Male, Solid, nickel, Number 12
32	GA5061270	Socket, Female, Solid, Nickel, Number 12
33	GA5053235	Socket, Female, Nickel, number 14, Green Band
34	GA5061220	Pin, Male, Gold, Number 16
35	GA5061240	Pin, Male, solid, nickel, Number 16, Green band, AWG 14
36	GA5075255	Pin, Male, Nickel, Crimp style, Number 16
37	GA3000022	Socket, Female, Nickel, Crimp style, Number 16
38	GA5061225	Socket, Female, solid gold, number 16
39	GA5061230	Socket, Female, solid, Nickel, Number 16
40	GA5061235	Socket, solid gold, number 16, 16-20AWG
41	GA5061200	Pin, Male, Solid, nickel, Number 20
42	GA5061205	Pin, Male, Solid, gold, Number 20
43	GA5061210	Socket, Female, Solid, nickel, Number 20
44	GA5061215	Socket, Female, Solid, gold, Number 20
45	GA5052840	Sealing plug, White, size 12 - 16

Console Mounting Kit

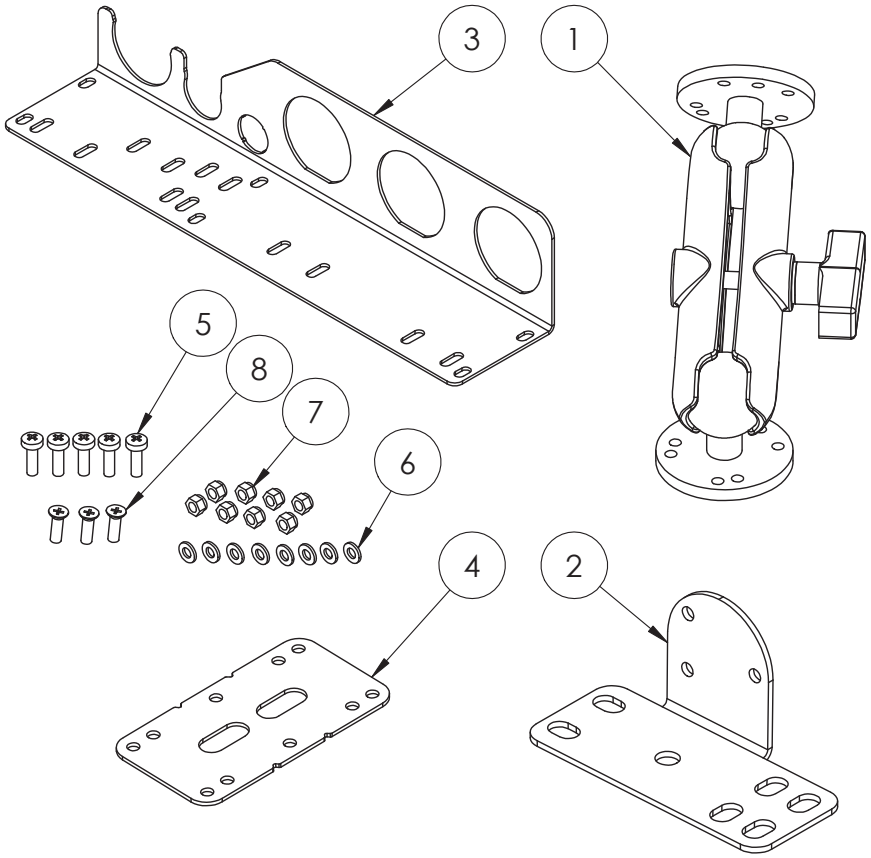

ITEM NO.	PART NUMBER	DESCRIPTION	QTY.
-	GA4903666	Complete console mounting kit	-
1	GA5020825	RAM Mount, Universal, Adjustable kit	1
2	GA4522930	Tractor controller ram mount bracket	1
3	GA4523475	Loom support plate suit 440 and 4400	1
4	GA4523935	Control box dual mounting plate	1
5	GA5003976	M5 x 20mm Pan head Screw	5
6	GA5003983	Washer 5mm Flat SS	8
7	GA5003975	Nut M5 Nyloc SS	8
8	GA5051230	CSCS M5 x 16 SS A2-70	3

Control Boxes

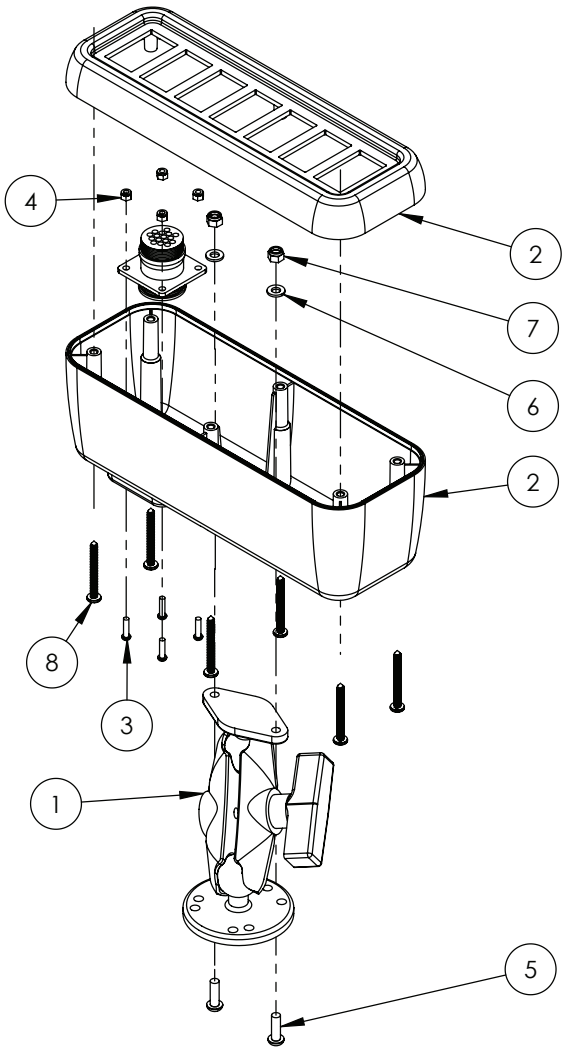

ITEM NO.	PART NUMBER	DESCRIPTION	QTY.
-	GA4903710	Complete switch Box A	-
-	GA4903715	Complete switch Box B	-
-	GA4903720	Complete switch Box C	-
1	GA5068930	Ram mount	1
2	GA5075100	Switch box bare 7 switches Top Switch box bare 7 switches Base	1
3	GA5003083	Screw M3 x 12 Pan Head Machine	4
4	GA5049465	Nut M3 Nyloc SS	4
5	GA5003977	Bolt M5 x 16 Pan Head SS	2
6	GA5003983	Washer 5mm Flat SS	2
7	GA5003975	Nut M5 Nyloc SS	2
8	GA5075105	Screw Phillips head 8G 1 1/2" Pan head self tapping SS	6
9	GA5060242	Loom hydraulic / base sprayer suit 7 switch box	1

Note: See Chapter 17 'Decals' for switch box decals.

Control Box - Switch Parts

PART NUMBER	DESCRIPTION
GA5012671	Switch, Rocker, On / off, Twin globe blue lens
GA5012673	Switch, Rocker, On / Off / On, Twin bulb back light, Blue lenses
GA5060410	Switch, Rocker, Momentary, On / Off / On, 2 pole, No bulb or actuator
GA5060405	Actuator, Rocker switch, No lens
GA5006421	Carling Switch Blank Hole Panel Plug (black)
GA5053525	Switch Evo steering calibrate

Chapter 16

SCHEMATICS

Direct Chemical Injection - Dual Unit

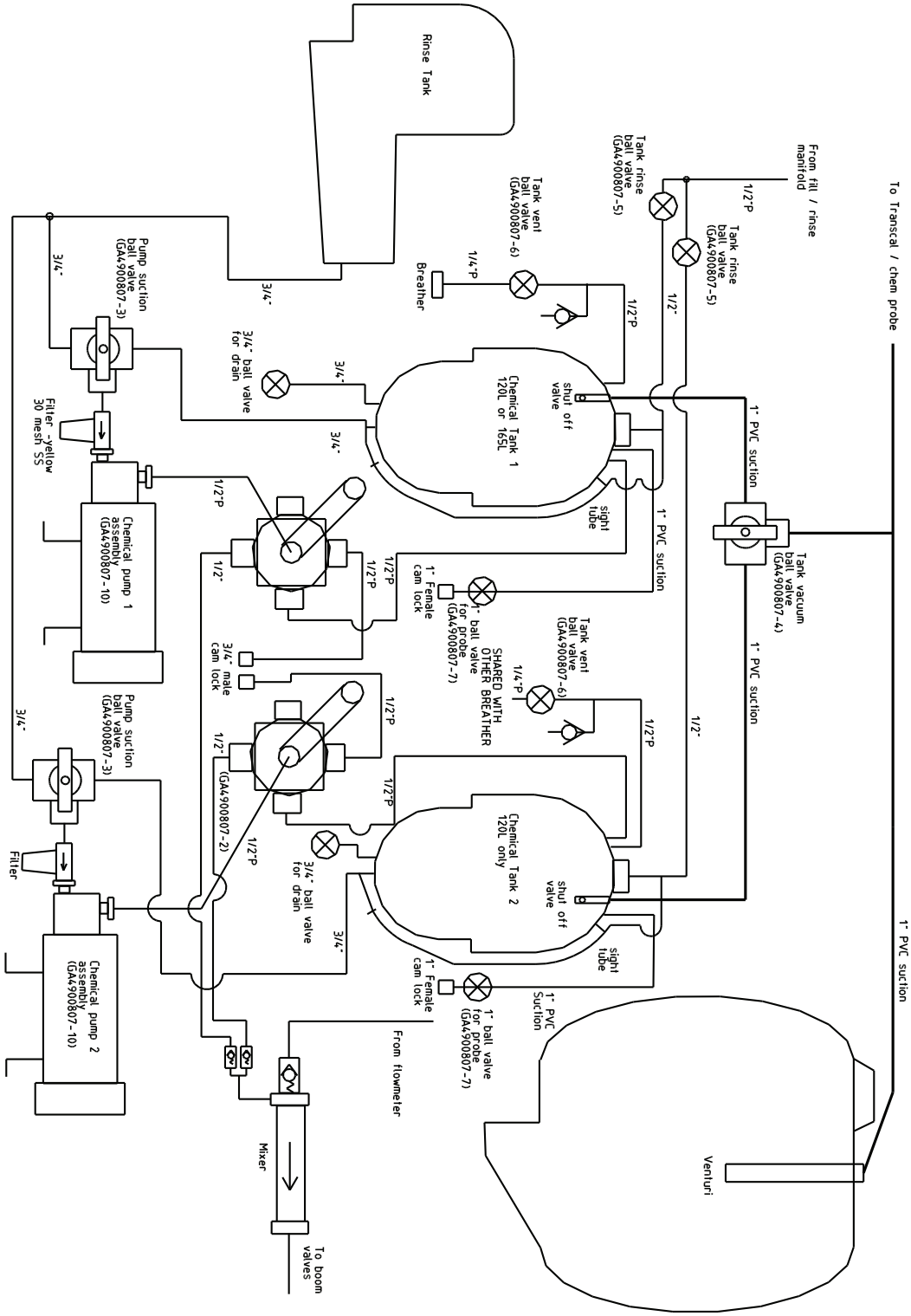

Direct Chemical Injection - Triple Unit

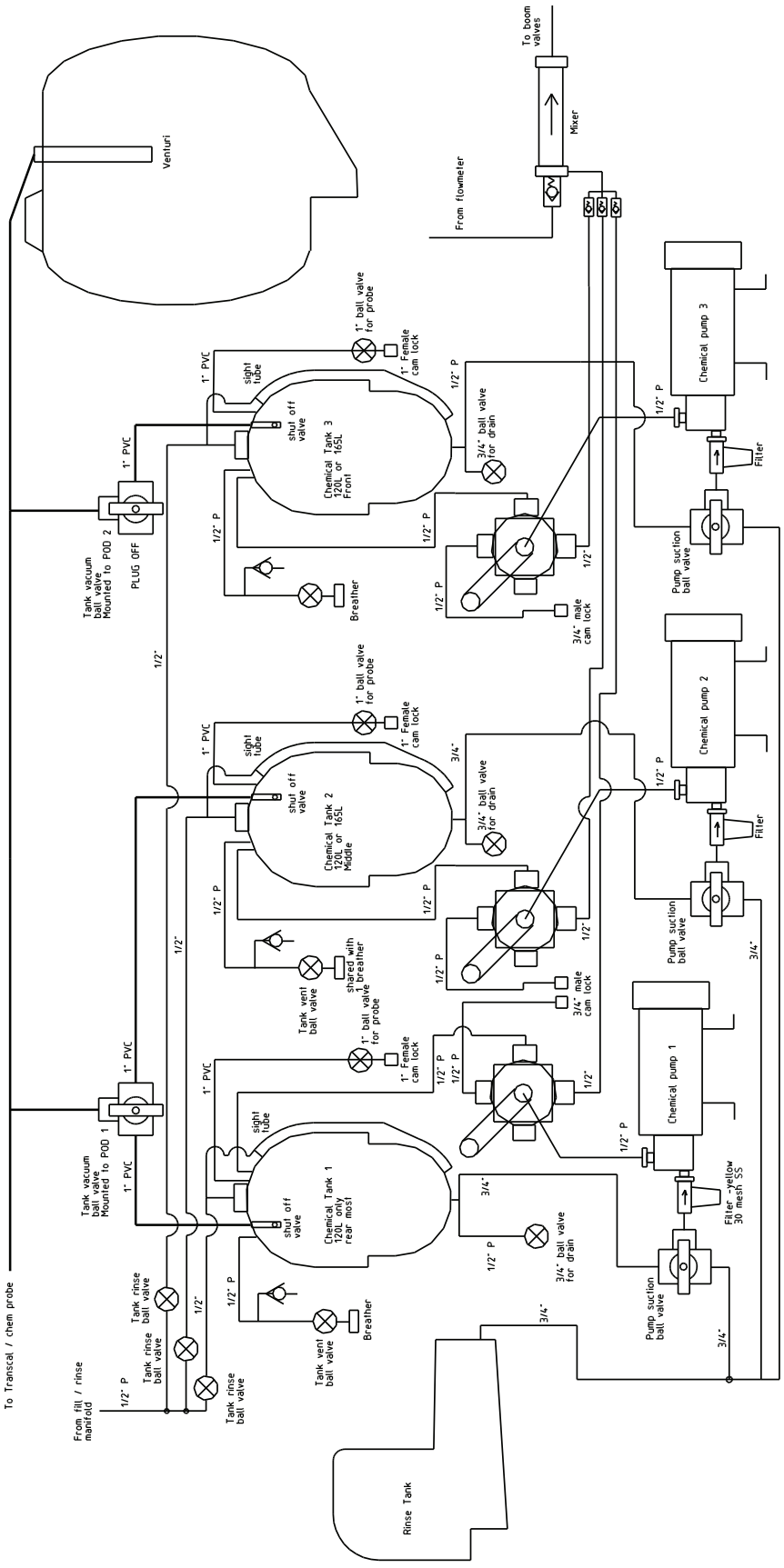

Electrical Layout - Overview

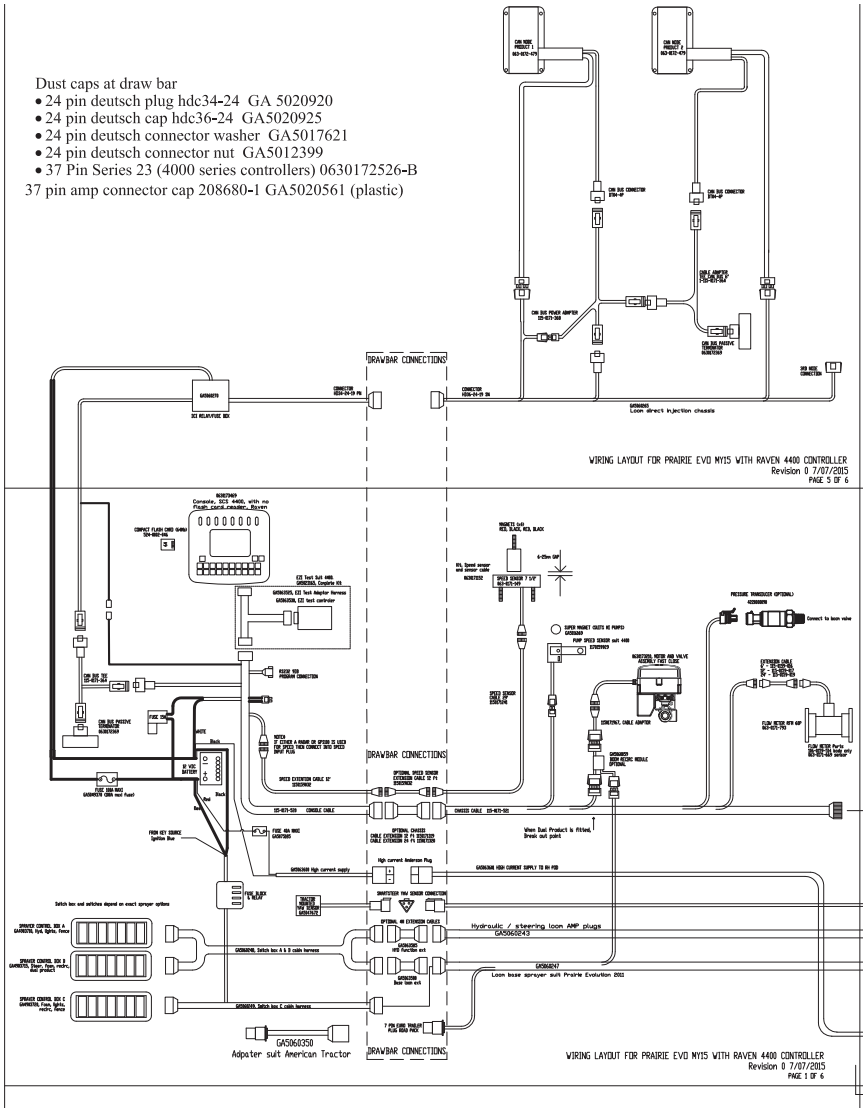

Continued over page

Electrical Layout - Overview

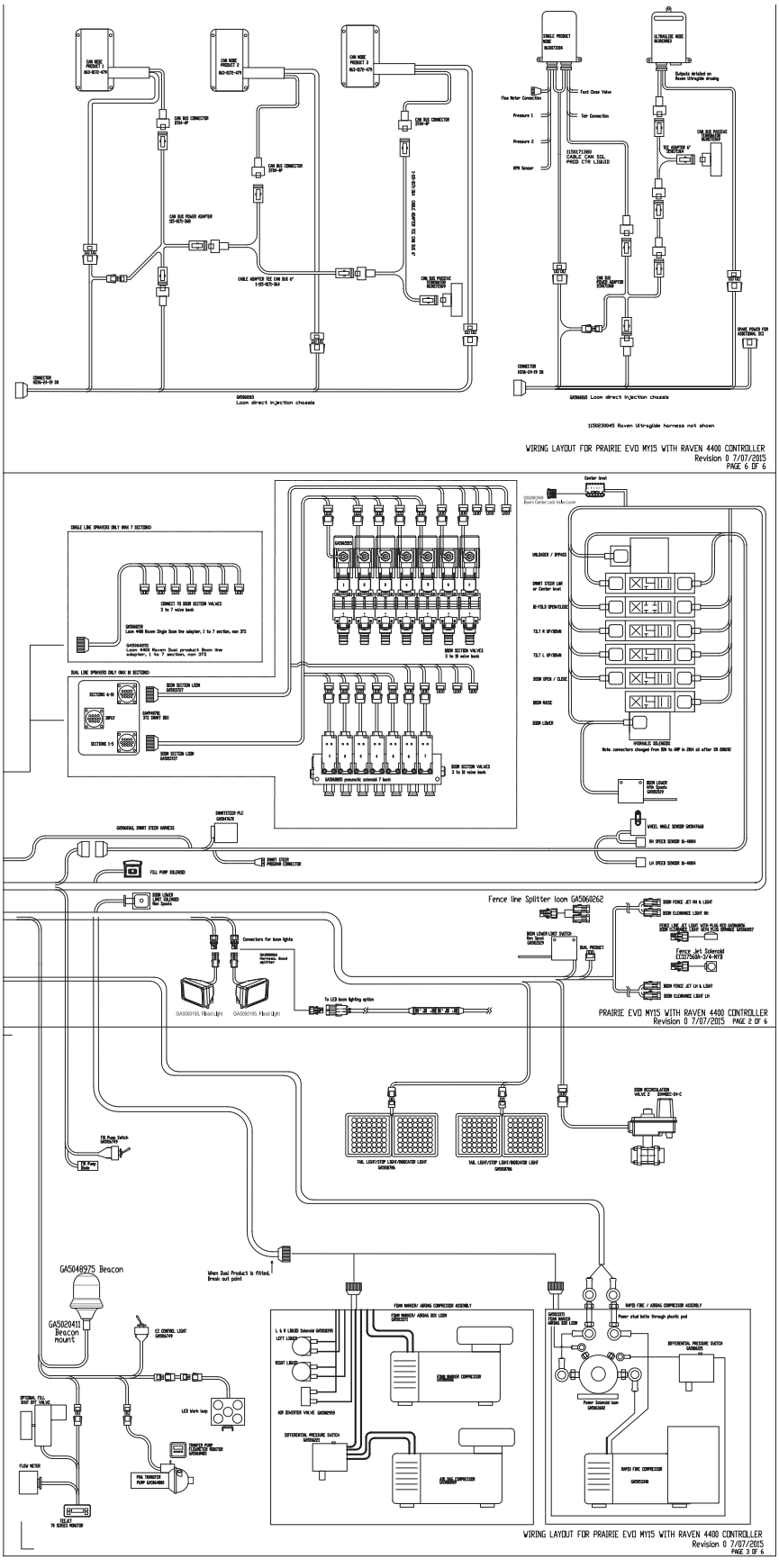

Electrical Layout - Page 1

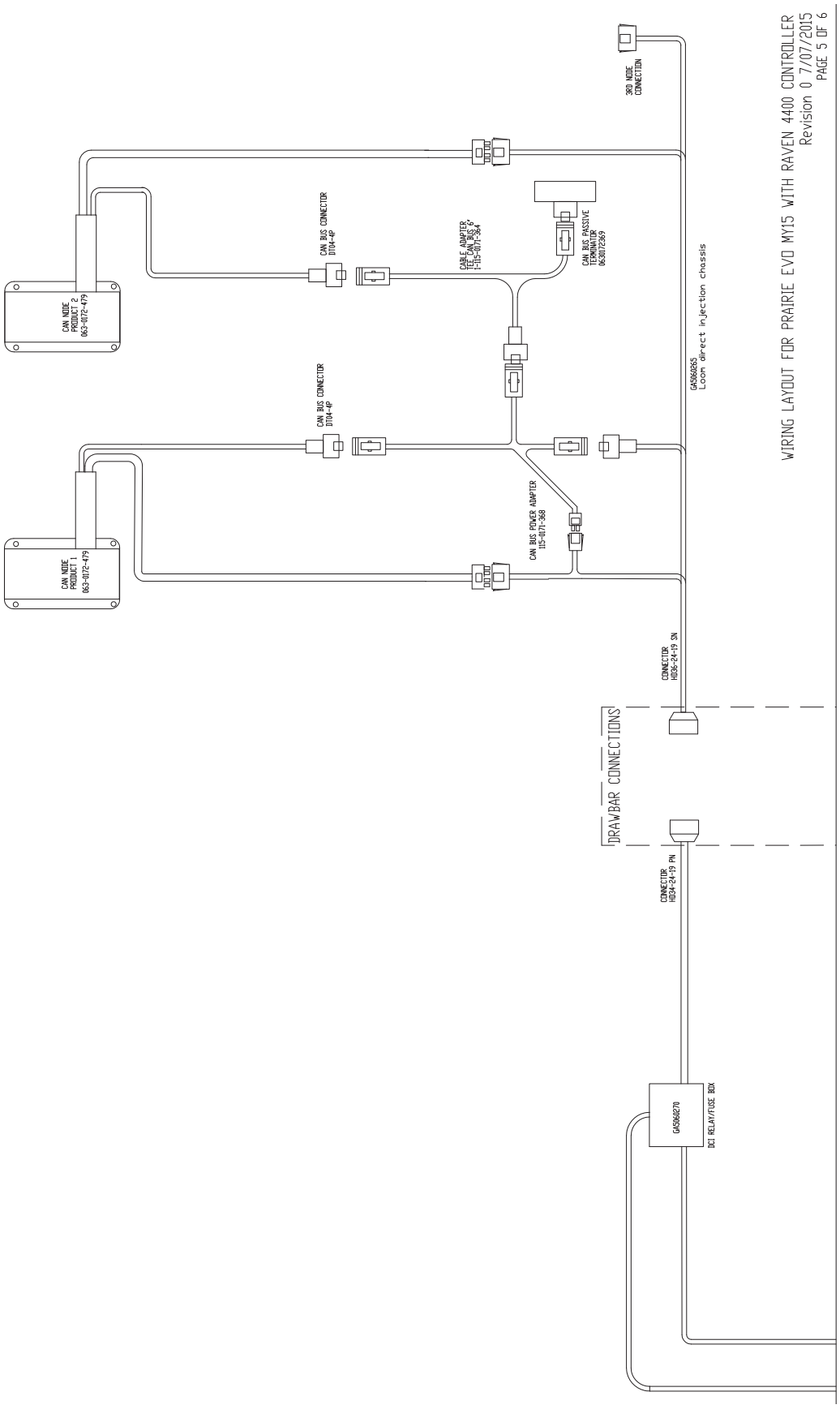

Electrical Layout - Page 2

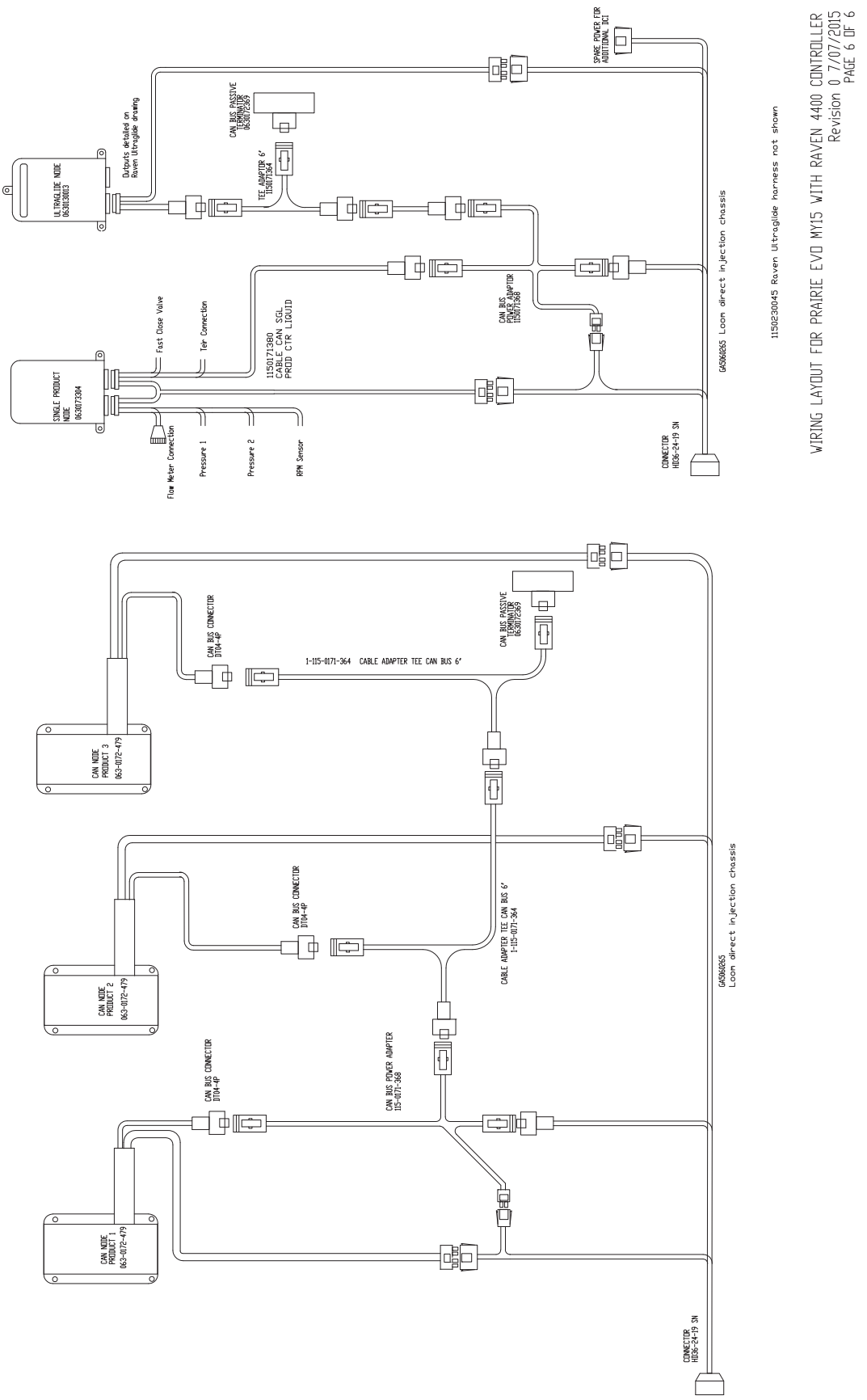

Electrical Layout - Page 3

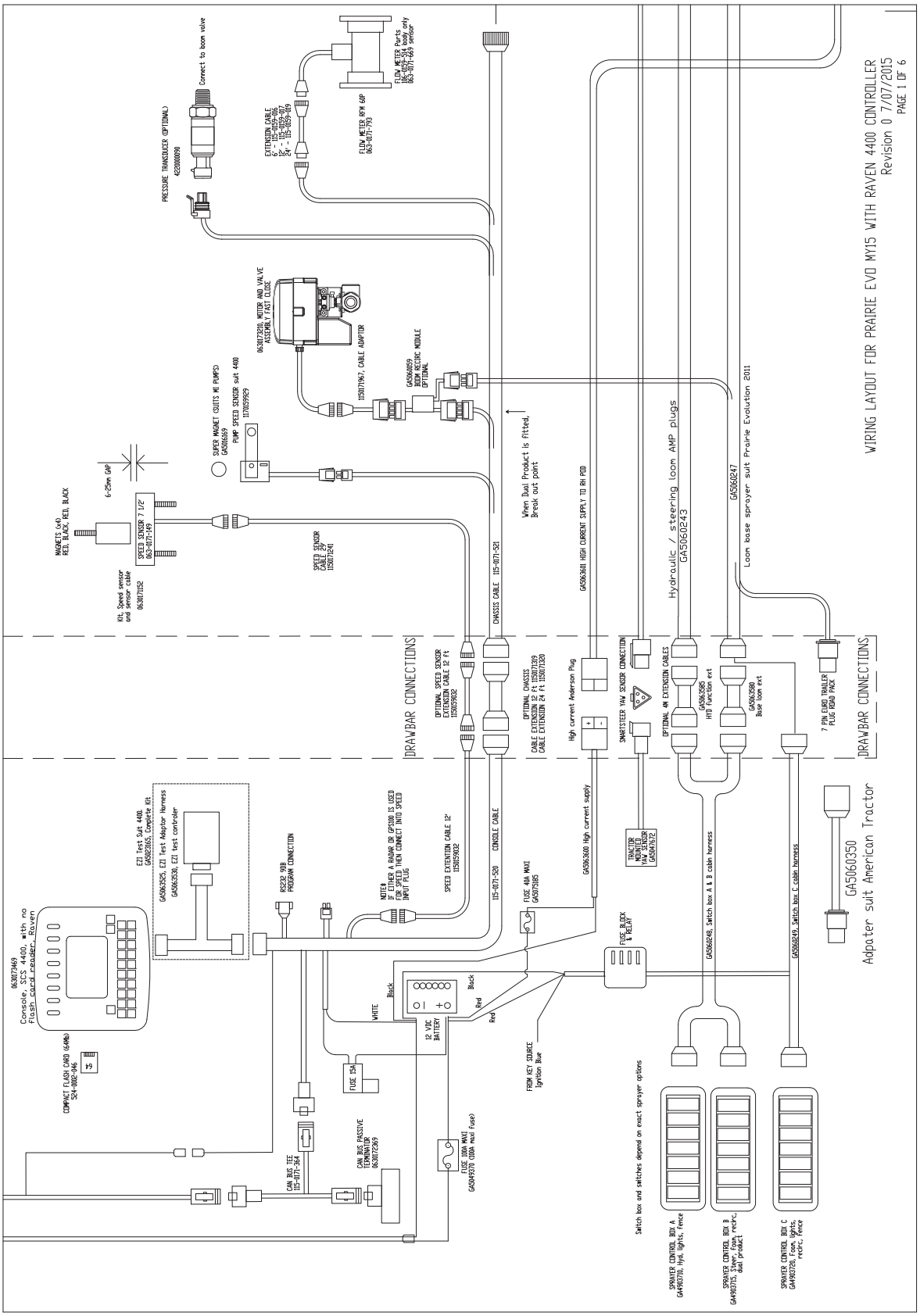

Electrical Layout - Page 4

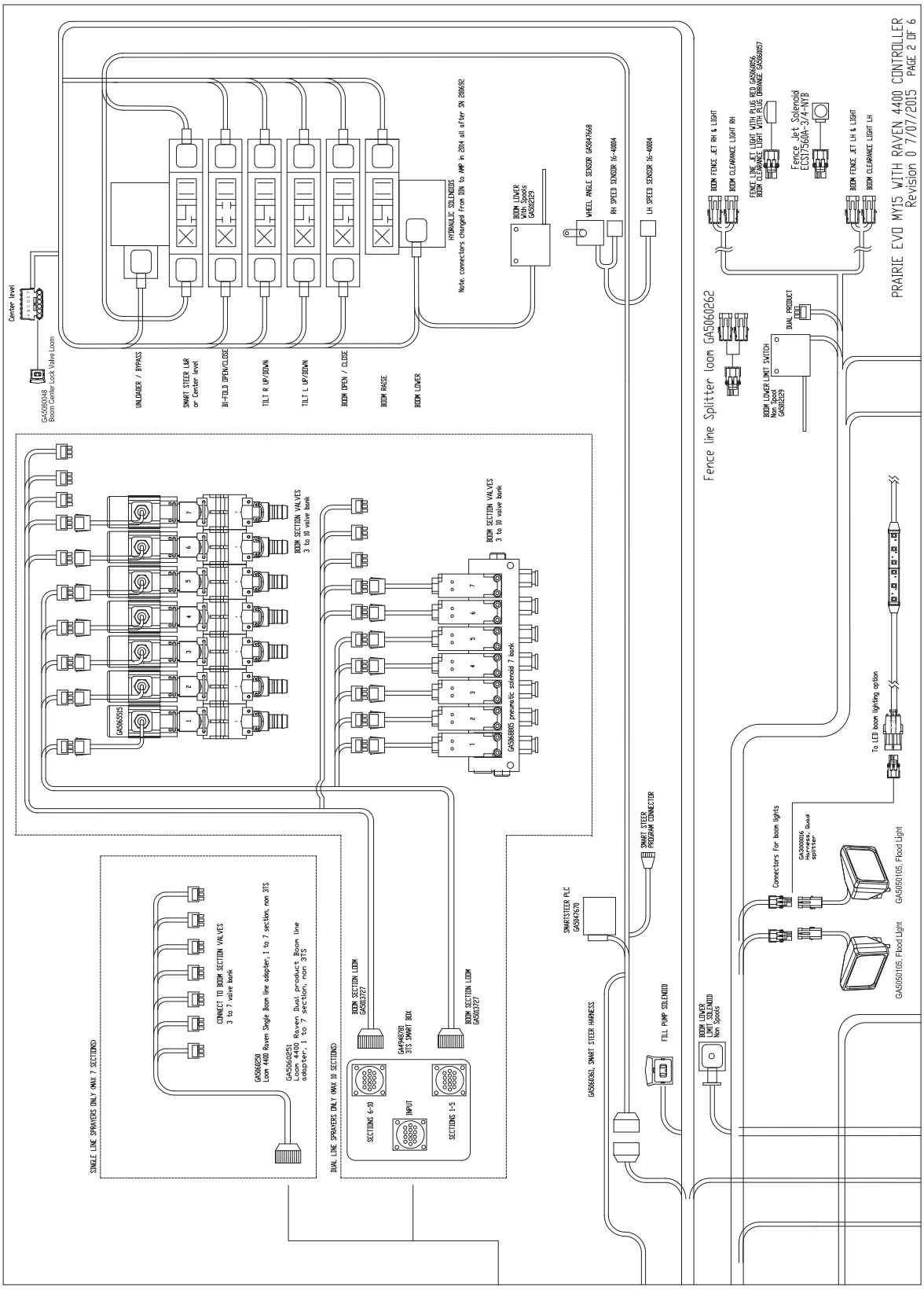

Electrical Layout - Page 5

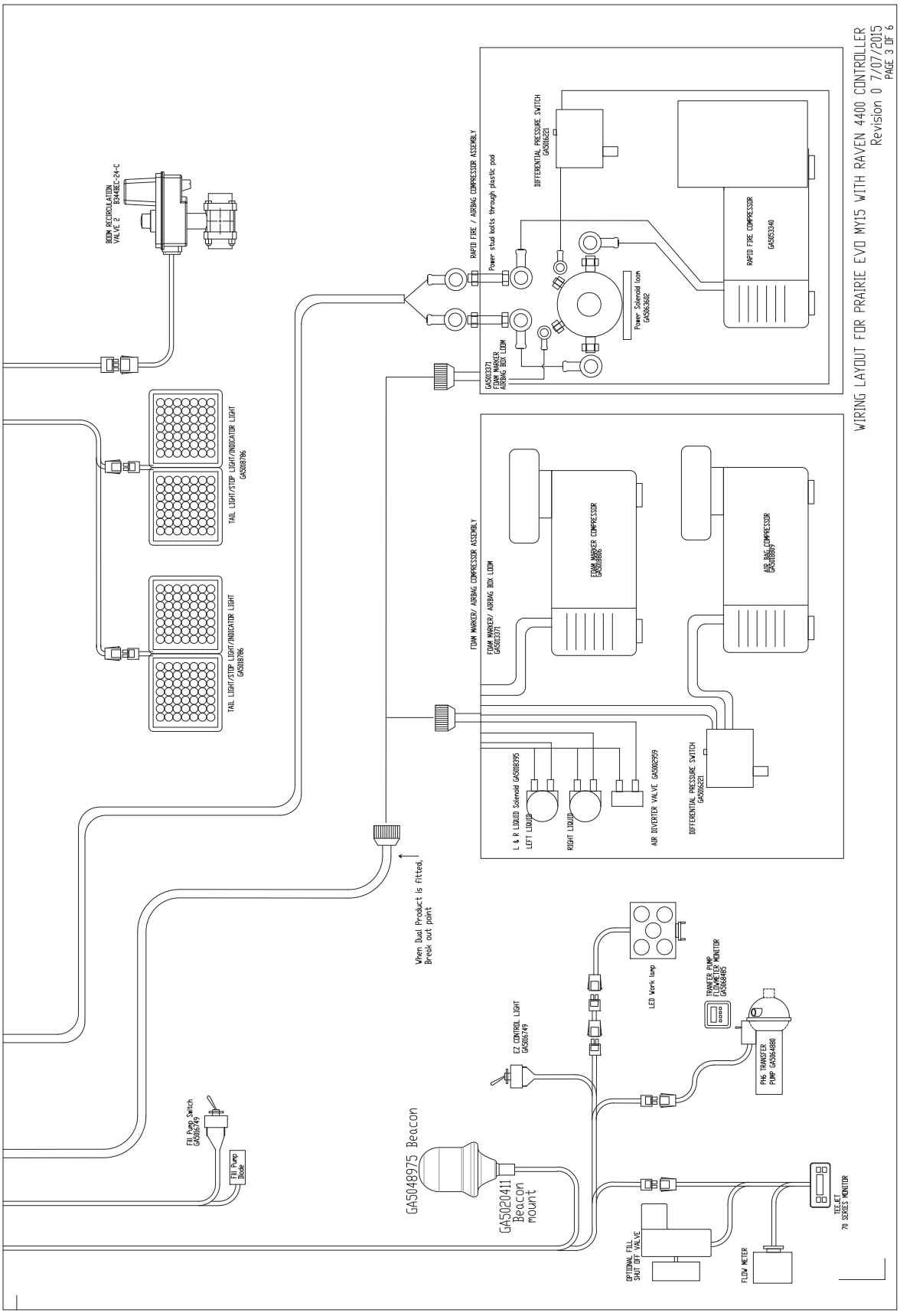

Electrical Layout - ISO BUS

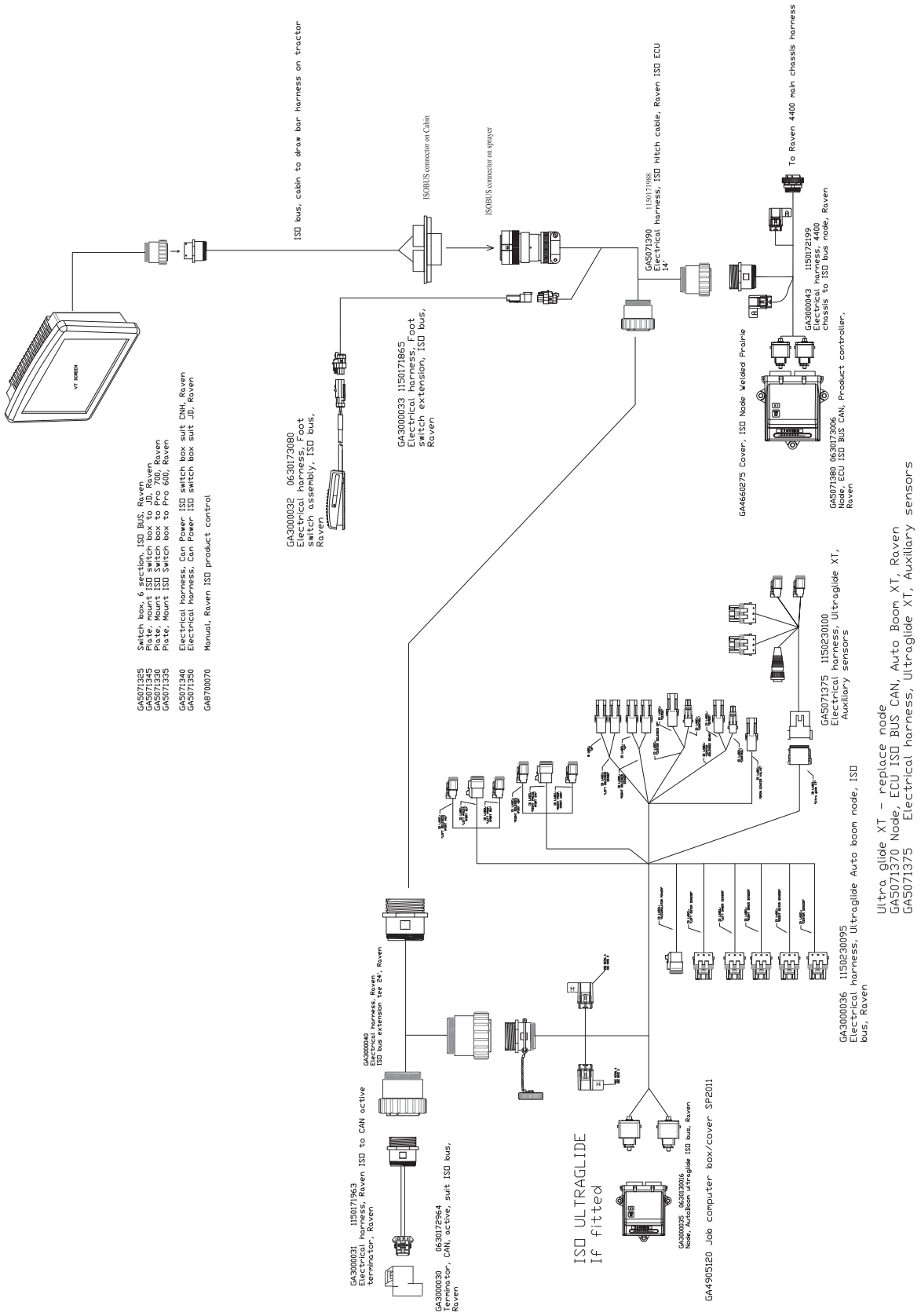

Hydraulics - No Spool Valves

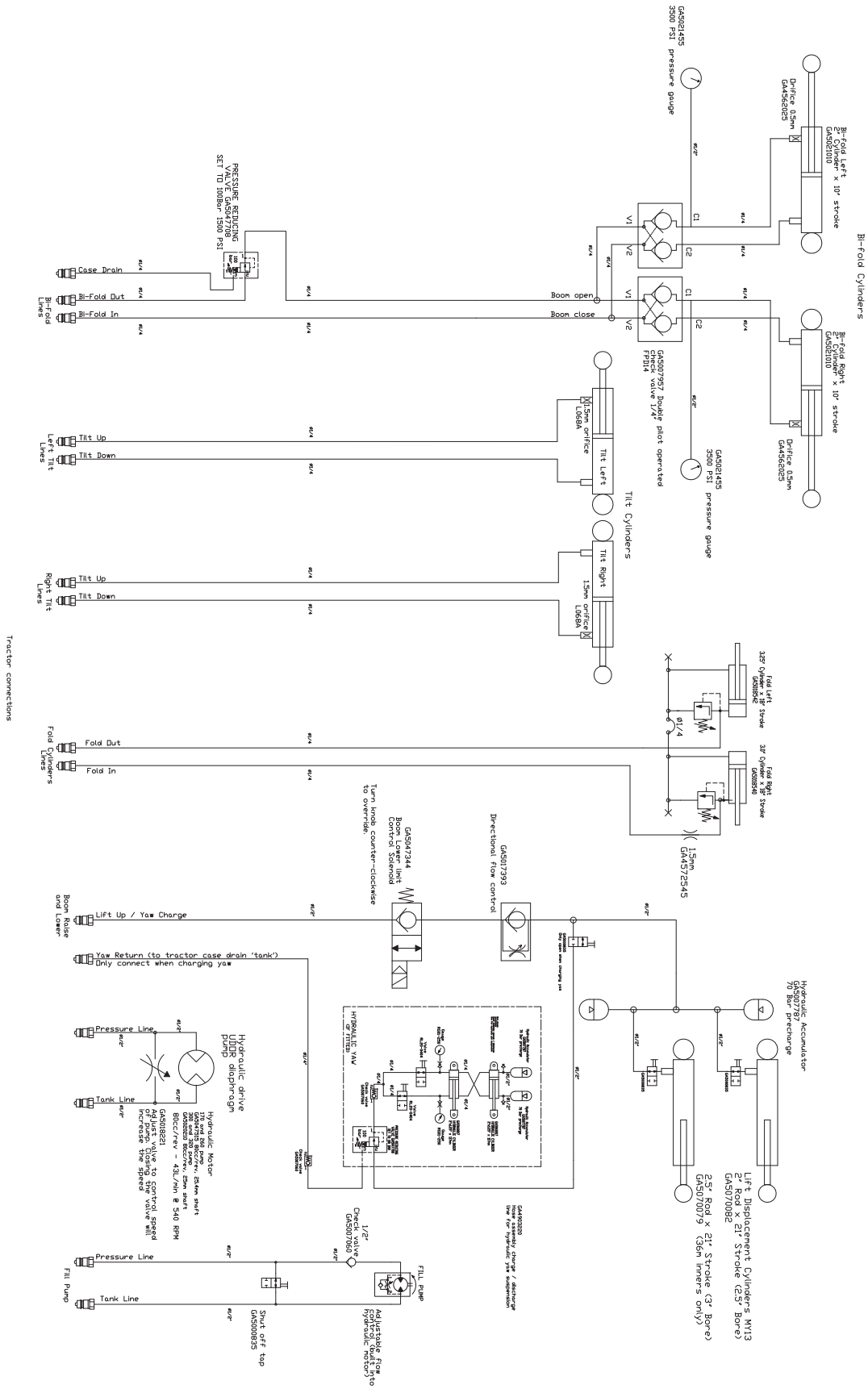

Hydraulics - Spool Valves Closed Centre

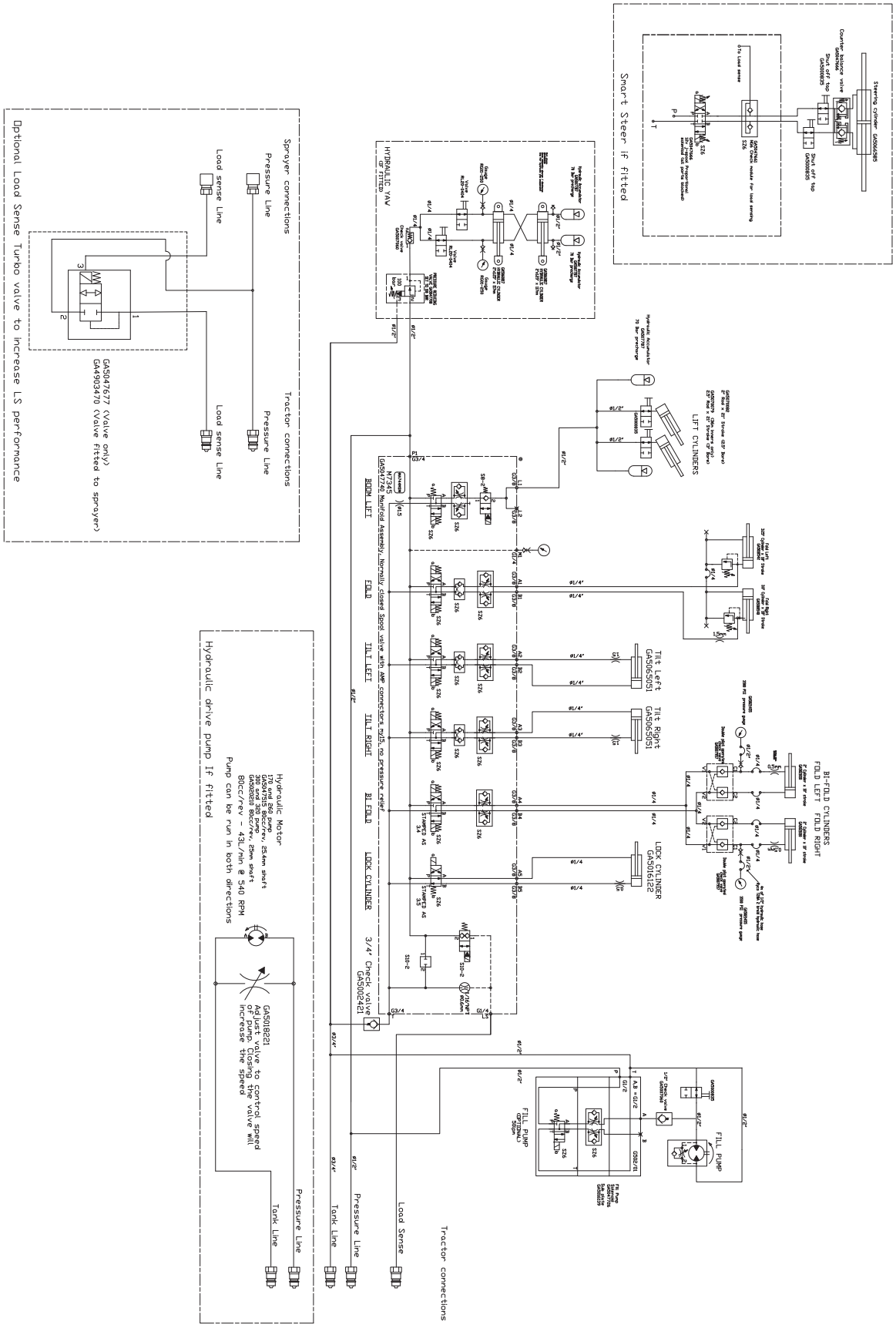

Hydraulics - Spool Valves Open Centre

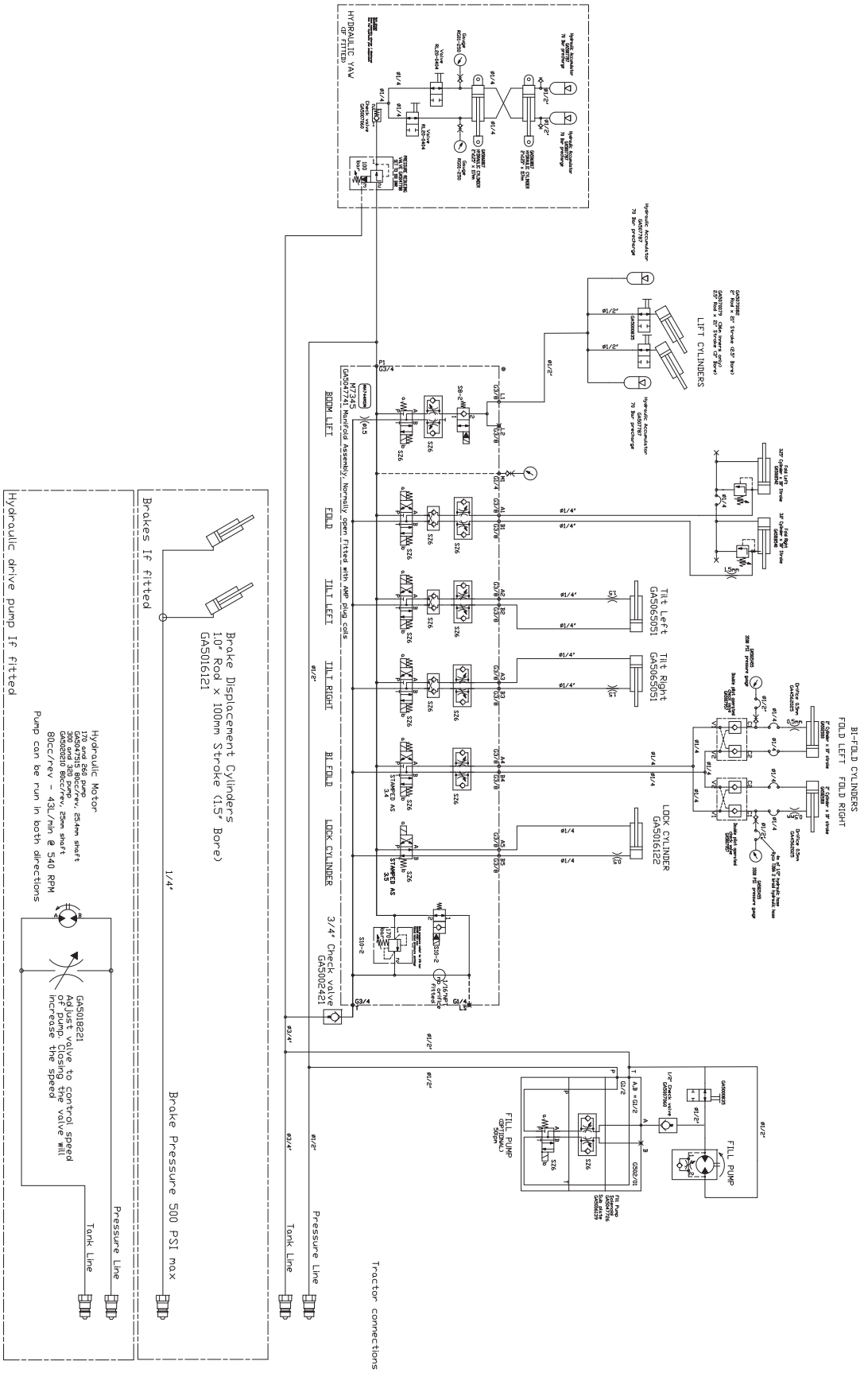

Hydraulics - Hose - 4000/5000L

Hose No.	Hose Length	End 1 (and orientation if reqd)	End 2 (and orientation if reqd)	Description	Orientation	Hose P/N
Spool Valve and Lift Hoses						
01	6000mm	Straight (T201-0808)	Straight (T201-0808)	Tractor to Tee - Pressure Line		GA5067890
02	3900mm	90Deg (T205-0808)	Straight (T202-0808)	Spool valve to acculator		GA5067899
03	2100mm x 2	90Deg (T205-0808)	Straight (T202-0808)	Accumulator to Lift Cylinder		GA5067898
04	6300mm	Straight (T202-1212)	Straight (T202-1212)	Tee to Spool Valve - Tank Line		GA5067906
05	7100mm	90Deg (T205-0808)	Straight (T202-0808)	Tee to Spool - Pressure Line		GA5067907
06	6000mm	Straight (T202-1212)	Straight (T201-1212)	Tractor to Tee - Tank Line		GA4905049
07	14000mm	90Deg (T205-0404)	Straight (T202-0404)	Tractor to Spool - Load Sense		GA5067891
Fold Hoses						
08	2375mm (1R)	JIC Straight (T204-0409)	Straight (T202-0404)	Left hand side		GA4905016
09	2600mm (2R)	Straight (T202-0404)	90Deg (T205-0404)	Right hand side		GA4905017
10	3560mm	JIC Straight (T204-0409)	JIC 90Deg (T205-0409)	Crossover link	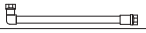	GA4905018
Tilt with Spool						
11	1480mm (1Y)	Straight (T202-0404)	90Deg (T205-0404)	Left Tilt 1		GA5067091
12	1140mm (2Y)	Straight (T202-0404)	Straight (T202-0404)	Left Tilt 2		GA5067092
13	1400mm (1B)	Straight (T202-0404)	90Deg (T205-0404)	Right Tilt 1		GA5067087
14	1030mm (2B)	Straight (T202-0404)	Straight (T202-0404)	Right Tilt 2		GA5067086
Hydraulic Yaw Hoses						
15	1400mm (1Y)	45 Deg (T227-0404)	straight (T202-0404)	Yaw Hose 1	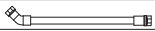	GA5067285
16	555mm (2Y)	45 Deg (T227-0404)	Straight (T202-0404)	Yaw Hose 2		GA5067133
17	785mm (1B)	45 Deg (T227-0404)	Straight (T202-0404)	Yaw Hose 3	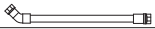	GA5067134
18	1680mm (2B)	90 Deg (T205-0404)	Straight (T202-0404)	Yaw Hose 4		GA5067132
19	1680mm (1R)	90 Deg (T205-0404)	Straight (T202-0404)	Yaw Hose 5		GA4903200
20	1140mm	90 Deg (T205-0808)	Straight (T202-0808)	Yaw Hose 6		GA5067136
21	560mm	90 Deg (T205-0808)	Straight (T202-0808)	Yaw Hose 7	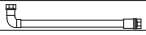	GA5067137
Yaw with Spool						
22	575mm (2B,1R) x 2	90 Deg (T205-0808)	45 Deg (T227-0808)	Pressure to Yaw Block	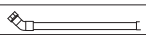	GA5067253
23	700mm (2B,2R) x 2	Straight (T202-0808)	90 Deg (T205-0808)	Tank to Yaw Block	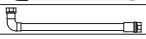	GA5067254
Ultraglide Hoses						
26	1040mm (1Y)	90 Deg (T226-0404)	Straight (T202-0404)	LV Hose	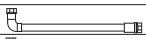	GA5067148
27	1265mm (2Y)	90 Deg (T226-0404)	Straight (T202-0404)	LT Cyl to LT CYL RTN	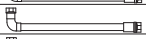	GA5067142
28	1130mm (3Y)	90 Deg (T226-0404)	Straight (T202-0404)	RV Hose to Right 'A' Spool	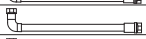	GA5067143
29	1495mm (1B)	90 Deg (T226-0404)	Straight (T202-0404)	RT Cyl to RT CYL RTN	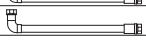	GA5067141
30	650mm (1B,1Y)	Straight (T202-0404)	Straight (T202-0404)	Load Sense Hose		GA5067146
31	1495mm (2B)	90 Deg (T226-0404)	Straight (T202-0404)	LC to Left Cylinder Hose		GA5067138
32	1355mm (3B)	90 Deg (T226-0404)	Straight (T202-0404)	RC to Right Cylinder Hose	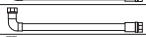	GA5067139
33	1465mm (3R)	90 Deg (T226-0404)	Straight (T202-0404)	Lf Cyl Rtn to Left 'B' Spool	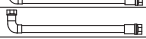	GA4905039
34	1330mm (4R)	90 Deg (T226-0404)	Straight (T202-0404)	RT Cyl rtn to Right 'B' Spool	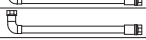	GA4905041
35	710mm (1Y,1R)	Straight (T202-0808)	Straight (T202-0808)	Spool valve P to Ultraglide EF	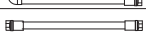	GA4905038
36	560mm (2Y,2R)	Straight (T202-0808) no Yaw	Straight (T202-0808)	Spool valve T to Ultraglide T		GA5067144
37	560mm (2Y,2R)	90 Deg (T205-0808) with Yaw	Straight (T202-0808)	Spool valve T to Ultraglide T	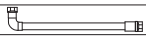	GA4905042

Continued over page

Hydraulics - Hose - 4000/5000L

Hose No.	Hose Length	End 1 (and orientation if reqd)	End 2 (and orientation if reqd)	Description	Orientation	Hose P/N
Hydraulic Driven Spray Pump ZETA 260 & 300						
43	4000mm ( ) x 2	90 Deg (T226-0808)	Straight (T201-0808)	Spray Pump	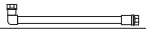	GA4922105
44	300mm ( )	Straight (T201-0808)	Straight (T202-0808)	Spray Pump	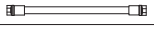	GA4922110
45	340mm ( )	Straight (T201-0808)	Straight (T202-0808)	Spray Pump	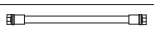	GA4922115
Bi-fold Hoses						
50	8900mm (1B)	90 Deg (T226-0808)	Straight (T202-0808)	Right Hand Gauge	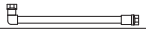	GA5067128
51	8900mm	90 Deg (T226-0808)	Straight (T202-0808)	Left Hand Gauge		GA5067128
52	880mm (1B,1Y)	90 Deg (T205-0404)	Straight (T202-0404)	Pressure to Bi-Fold Block		GA5067129
53	910mm (2B,1Y)	90 Deg (T205-0808)	Straight (T202-0404)	Pressure to Bi-Fold Block		GA5067119
54	300mm x 2	Straight (T202-0404)	Straight (T202-0404)	Bi-Fold Link	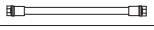	GA5067131
55	5260mm (1Y)	90 Deg (T226-0404)	Straight (T202-0404)	RV1 - RH Cylinder	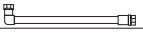	GA5067126
56	4890mm (2Y)	90 Deg (T226-0404)	Straight (T202-0404)	RV2 - RH Cylinder	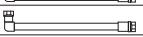	GA5067127
57	5185mm (1B)	90 Deg (T226-0404)	Straight (T202-0404)	LV1 - LH Cylinder	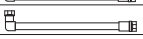	GA5067270
58	5020mm (2B)	90 Deg (T226-0404)	Straight (T202-0404)	LV2 - LH Cylinder	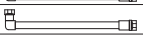	GA5067271
Fill Pump With Spool						
59	2230mm (1B)	45 Deg (T227-0808)	Straight (T202-0808)	Spool to Pump A	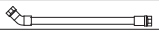	GA5067910
60	2260mm (1R)	45 Deg (T227-0808)	Straight (T202-0808)	Spool to Pump B		GA5067903
61	000mm	( )	( )	oo	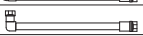	GA
62	000mm	( )	( )	oo	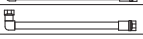	GA
Ultraglide XT Hoses						
70	330mm (1B)	90Deg (T205-0404)	90Deg (T205-0404)	Pressure Hose	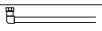	GA3500092
71	360mm (2B)	90Deg (T205-0404)	90Deg (T226-0404)	Tank Hose	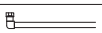	GA3500093
72	1465mm (1Y)	90Deg (T205-0404)	Straight (T202-0404)	1 on XT Block to RH Side Ram Rod End		GA3500094
73	1265mm (2Y)	90Deg (T205-0404)	Straight (T202-0404)	2 on XT Block to RH Side Ram Solid End	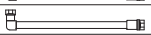	GA3500095
74	2160mm (1R)	90Deg (T205-0404)	Straight (T202-0404)	Crossover Hose, RH Solid End to LH Rod End	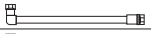	GA3500096
75	1970mm (2R)	90Deg (T205-0404)	Straight (T202-0404)	Crossover Hose, LH Solid End to RH Rod End	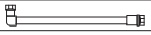	GA3500097
Centre Level Hoses						
76	1440mm (1Y)	Straight (T202-0404)	Straight (T202-0404)	Cylinder Rod end to A Port	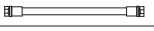	GA4905081
77	1245mm	Straight (T202-0404)	Straight (T202-0404)	Cylinder Base to B Port	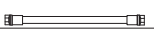	GA4905082

Hydraulics - Hose - 6500/7500L

Hose No.	Hose Length	End 1 (and orientation if reqd)	End 2 (and orientation if reqd)	Description	Orientation	Hose P/N
Spool Valve and Lift Hoses						
01	6000mm	Straight (T201-0808)	Straight (T201-0808)	Tractor to Tee - Pressure Line		GA5067890
02	3900mm	90Deg (T205-0808)	Straight (T202-0808)	Spool valve to acculator	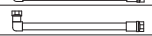	GA5067899
03	2100mm x 2	90Deg (T205-0808)	Straight (T202-0808)	Accumulator to Lift Cylinder	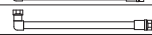	GA5067898
04	6900mm	Straight (T202-1212)	Straight (T202-1212)	Tee to Spool Valve - Tank Line	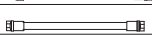	GA4905021
05	7700mm	90Deg (T205-0808)	Straight (T202-0808)	Tee to Spool - Pressure Line	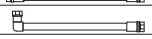	GA4905022
06	6000mm	Straight (T202-1212)	Straight (T201-1212)	Tractor to Tee - Tank Line	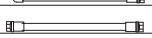	GA4905049
07	14000mm	90Deg (T205-0404)	Straight (T202-0404)	Tractor to Spool - Load Sense		GA4905023
Fold Hoses						
08	2375mm (1R)	JIC Straight (T204-0409)	Straight (T202-0404)	Left hand side		GA5067901
09	2600mm (2R)	Straight (T202-0404)	90Deg (T205-0404)	Right hand side	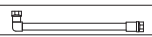	GA5067900
10	3560mm	JIC Straight (T204-0409)	JIC 90Deg (T205-0409)	Crossover link	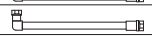	GA5067902
Tilt with Spool						
11	1480mm (1Y)	Straight (T202-0404)	90Deg (T205-0404)	Left Tilt 1	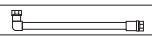	GA5067091
12	1140mm (2Y)	Straight (T202-0404)	Straight (T202-0404)	Left Tilt 2		GA5067092
13	1400mm (1B)	Straight (T202-0404)	90Deg (T205-0404)	Right Tilt 1	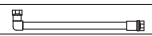	GA5067087
14	1030mm (2B)	Straight (T202-0404)	Straight (T202-0404)	Right Tilt 2		GA5067086
Hydraulic Yaw Hoses						
15	1400mm (1Y)	45 Deg (T227-0404)	straight (T202-0404)	Yaw Hose 1		GA5067138
16	555mm (2Y)	45 Deg (T227-0404)	Straight (T202-0404)	Yaw Hose 2		GA5067133
17	785mm (1B)	45 Deg (T227-0404)	Straight (T202-0404)	Yaw Hose 3	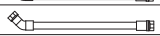	GA5067134
18	1680mm (2B)	90 Deg (T205-0404)	Straight (T202-0404)	Yaw Hose 4	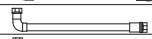	GA5067132
19	1680mm (1R)	90 Deg (T205-0404)	Straight (T202-0404)	Yaw Hose 5	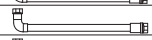	GA4903200
20	1140mm	90 Deg (T205-0808)	Straight (T202-0808)	Yaw Hose 6	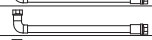	GA5067136
21	560mm	90 Deg (T205-0808)	Straight (T202-0808)	Yaw Hose 7	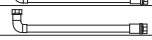	GA5067137
Yaw with Spool						
22	575mm (2B,1R) x2	90 Deg (T205-0808)	Straight (T227-0808)	Pressure to Yaw Block	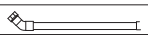	GA5067253
23	700mm (2B,2R) x2	Straight (T202-0808)	90 Deg (T205-0808)	Tank to Yaw Block	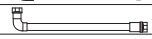	GA5067254
Ultraglide Hoses						
26	1040mm (1Y)	90 Deg (T226-0404)	Straight (T202-0404)	LV Hose		GA5067148
27	1265mm (2Y)	90 Deg (T226-0404)	Straight (T202-0404)	LT Cyl to LT CYL RTN	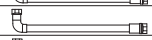	GA5067142
28	1130mm (3Y)	90 Deg (T226-0404)	Straight (T202-0404)	RV Hose to Right 'A' Spool	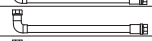	GA5067143
29	1495mm (1B)	90 Deg (T226-0404)	Straight (T202-0404)	RT Cyl to RT CYL RTN	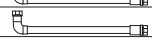	GA5067141
30	650mm (1B,1Y)	Straight (T202-0404)	Straight (T202-0404)	Load Sense Hose	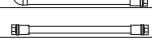	GA5067146
31	1495mm (2B)	90 Deg (T226-0404)	Straight (T202-0404)	LC to Left Cylinder Hose		GA5067138
32	1355mm (3B)	90 Deg (T226-0404)	Straight (T202-0404)	RC to Right Cylinder Hose		GA5067139
33	1465mm (3R)	90 Deg (T226-0404)	Straight (T202-0404)	Lf Cyl Rtn to Left 'B' Spool		GA4905039
34	1330mm (4R)	90 Deg (T226-0404)	Straight (T202-0404)	RT Cyl rtn to Right 'B' Spool		GA4905041
35	710mm (1Y,1R)	Straight (T202-0808)	Straight (T202-0808)	Spool valve P to Ultraglide EF	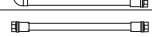	GA4905038
36	560mm (2Y,2R)	Straight (T202-0808) no Yaw	Straight (T202-0808)	Spool valve T to Ultraglide T	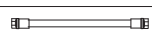	GA5067144
37	560mm (2Y,2R)	90 Deg (T205-0808) with Yaw	Straight (T202-0808)	Spool valve T to Ultraglide T	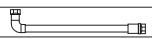	GA4905042

Continued over page

Hydraulics - Hose - 6500/7500L

Hose No.	Hose Length	End 1 (and orientation if reqd)	End 2 (and orientation if reqd)	Description	Orientation	Hose P/N
Hydraulic Driven Spray Pump ZETA 260 & 300						
43	4000mm ( ) 2	90 Deg (T226-0808)	Straight (T201-0808)	Spray Pump		GA4922105
44	300mm ( )	Straight (T201-0808)	Straight (T202-0808)	Spray Pump		GA4922110
45	340mm ( )	Straight (T201-0808)	Straight (T202-0808)	Spray Pump	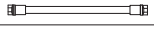	GA4922115
Bi-fold Hoses						
50	9500mm (1B)	90 Deg (T226-0808)	Straight (T202-0808)	Right Hand Gauge	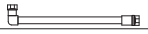	GA4905026
51	9500mm	90 Deg (T226-0808)	Straight (T202-0808)	Left Hand Gauge	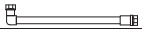	GA4905026
52	880mm (1B,1Y)	90 Deg (T205-0404)	Straight (T202-0404)	Pressure to Bi-Fold Block	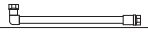	GA5067129
53	910mm (2B,1Y)	90 Deg (T205-0808)	Straight (T202-0404)	Pressure to Bi-Fold Block		GA5067119
54	300mm x 2	Straight (T202-0404)	Straight (T202-0404)	Bi-Fold Link	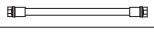	GA5067131
55	5260mm (1Y)	90 Deg (T226-0404)	Straight (T202-0404)	RV1 - RH Cylinder		GA5067126
56	4890mm (2Y)	90 Deg (T226-0404)	Straight (T202-0404)	RV2 - RH Cylinder		GA5067127
57	5185mm (1B)	90 Deg (T226-0404)	Straight (T202-0404)	LV1 - LH Cylinder		GA5067270
58	5020mm (2B)	90 Deg (T226-0404)	Straight (T202-0404)	LV2 - LH Cylinder		GA5067271
Fill Pump With Spool						
59	2230mm (1B)	45 Deg (T227-0808)	Straight (T202-0808)	Spool to Pump A	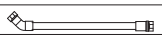	GA5067910
60	2260mm (1R)	45 Deg (T227-0808)	Straight (T202-0808)	Spool to Pump B	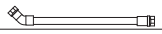	GA5067903
61	000mm	( )	( )	oo	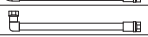	GA
62	000mm	( )	( )	oo	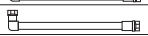	GA
Ultraglide XT Hoses						
70	330mm (1B)	90Deg (T205-0404)	90Deg (T205-0404)	Pressure Hose	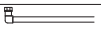	GA3500092
71	360mm (2B)	90Deg (T205-0404)	90Deg (T226-0404)	Tank Hose		GA3500093
72	1465mm (1Y)	90Deg (T205-0404)	Straight (T202-0404)	1 on XT Block to RH Side Ram Rod End	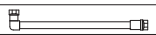	GA3500094
73	1265mm (2Y)	90Deg (T205-0404)	Straight (T202-0404)	2 on XT Block to RH Side Ram Solid End	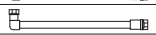	GA3500095
74	2160mm (1R)	90Deg (T205-0404)	Straight (T202-0404)	Crossover Hose, RH Solid End to LH Rod End	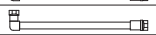	GA3500096
75	1970mm (2R)	90Deg (T205-0404)	Straight (T202-0404)	Crossover Hose, LH Solid End to RH Rod End	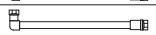	GA3500097
Centre Level Hoses						
76	1440mm (1Y)	Straight (T202-0404)	Straight (T202-0404)	Cylinder Rod end to A Port	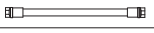	GA4905081
77	1245mm	Straight (T202-0404)	Straight (T202-0404)	Cylinder Base to B Port	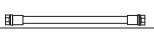	GA4905082

Hydraulics - Hose - 8500L

Hose No.	Hose Length	End 1 (and orientation if reqd)	End 2 (and orientation if reqd)	Description	Orientation	Hose P/N
Spool Valve and Lift Hoses						
01	6000mm	Straight (T201-0808)	Straight (T201-0808)	Tractor to Tee - Pressure Line		GA5067890
02	3900mm	90Deg (T205-0808)	Straight (T202-0808)	Spool valve to acculator	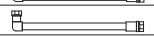	GA5067899
03	2100mm x 2	90Deg (T205-0808)	Straight (T202-0808)	Accumulator to Lift Cylinder	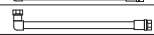	GA5067898
04	7300mm	Straight (T202-1212)	Straight (T202-1212)	Tee to Spool Valve - Tank Line		GA4905027
05	8100mm	90Deg (T205-0808)	Straight (T202-0808)	Tee to Spool - Pressure Line		GA4905028
06	6000mm	Straight (T202-1212)	Straight (T201-1212)	Tractor to Tee - Tank Line		GA4905049
07	14600mm	90Deg (T205-0404)	Straight (T202-0404)	Tractor to Spool - Load Sense		GA4905029
Fold Hoses						
08	2375mm (1R)	JIC Straight (T204-0409)	Straight (T202-0404)	Left hand side		GA5067901
09	2600mm (2R)	Straight (T202-0404)	90Deg (T205-0404)	Right hand side		GA5067900
10	3560mm	JIC Straight (T204-0409)	JIC 90Deg (T205-0409)	Crossover link	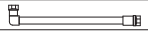	GA5067902
Tilt with Spool Hoses						
11	1480mm (1Y)	Straight (T202-0404)	90Deg (T205-0404)	Left Tilt 1	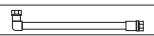	GA5067091
12	1140mm (2Y)	Straight (T202-0404)	Straight (T202-0404)	Left Tilt 2		GA5067092
13	1400mm (1B)	Straight (T202-0404)	90Deg (T205-0404)	Right Tilt 1		GA5067087
14	1030mm (2B)	Straight (T202-0404)	Straight (T202-0404)	Right Tilt 2		GA5067086
Hydraulic Yaw Hoses						
15	1400mm (1Y)	45 Deg (T227-0404)	straight (T202-0404)	Yaw Hose 1		GA5067138
16	555mm (2Y)	45 Deg (T227-0404)	Straight (T202-0404)	Yaw Hose 2	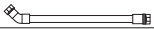	GA5067133
17	785mm (1B)	45 Deg (T227-0404)	Straight (T202-0404)	Yaw Hose 3	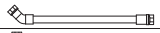	GA5067134
18	1680mm (2B)	90 Deg (T205-0404)	Straight (T202-0404)	Yaw Hose 4	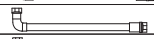	GA5067132
19	1680mm (1R)	90 Deg (T205-0404)	Straight (T202-0404)	Yaw Hose 5	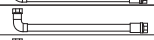	GA4903200
20	1140mm	90 Deg (T205-0808)	Straight (T202-0808)	Yaw Hose 6	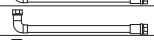	GA5067136
21	560mm	90 Deg (T205-0808)	Straight (T202-0808)	Yaw Hose 7	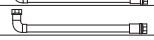	GA5067137
Yaw with Spool						
22	575mm (2B,1R) x 2	90 Deg (T205-0808)	Straight (T227-0808)	Pressure to Yaw Block	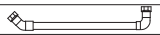	GA5067253
23	700mm (2B,2R) x 2	Straight (T202-0808)	90 Deg (T205-0808)	Tank to Yaw Block	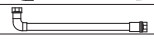	GA5067254
Ultraglide Hoses						
26	1040mm (1Y)	90 Deg (T226-0404)	Straight (T202-0404)	LV Hose	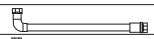	GA5067148
27	1265mm (2Y)	90 Deg (T226-0404)	Straight (T202-0404)	LT Cyl to LT CYL RTN	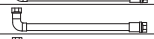	GA5067142
28	1130mm (3Y)	90 Deg (T226-0404)	Straight (T202-0404)	RV Hose to Right 'A' Spool	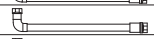	GA5067143
29	1495mm (1B)	90 Deg (T226-0404)	Straight (T202-0404)	RT Cyl to RT CYL RTN		GA5067141
30	650mm (1B,1Y)	Straight (T202-0404)	Straight (T202-0404)	Load Sense Hose		GA5067146
31	1495mm (2B)	90 Deg (T226-0404)	Straight (T202-0404)	LC to Left Cylinder Hose		GA5067138
32	1355mm (3B)	90 Deg (T226-0404)	Straight (T202-0404)	RC to Right Cylinder Hose	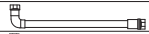	GA5067139
33	1465mm (3R)	90 Deg (T226-0404)	Straight (T202-0404)	Lf Cyl Rtn to Left 'B' Spool	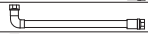	GA4905039
34	1330mm (4R)	90 Deg (T226-0404)	Straight (T202-0404)	RT Cyl rtn to Right 'B' Spool	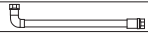	GA4905041
35	710mm (1Y,1R)	Straight (T202-0808)	Straight (T202-0808)	Spool valve P to Ultraglide EF		GA4905038
36	560mm (2Y,2R)	Straight (T202-0808) no Yaw	Straight (T202-0808)	Spool valve T to Ultraglide T		GA5067144
37	560mm (2Y,2R)	90 Deg (T205-0808) with Yaw	Straight (T202-0808)	Spool valve T to Ultraglide T	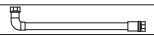	GA4905042

Continued over page

Hydraulics - Hose - 8500L

Hose No.	Hose Length	End 1 (and orientation if reqd)	End 2 (and orientation if reqd)	Description	Orientation	Hose P/N
Hydraulic Driven Spray Pump ZETA 260 & 300						
43	4000mm ( ) x 2	90 Deg (T226-0808)	Straight (T201-0808)	Spray Pump	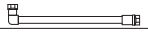	GA4922105
44	300mm ( )	Straight (T201-0808)	Straight (T202-0808)	Spray Pump	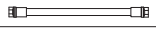	GA4922110
45	340mm ( )	Straight (T201-0808)	Straight (T202-0808)	Spray Pump	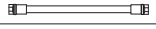	GA4922115
Bi-fold Hoses						
50	9900mm (1B)	90 Deg (T226-0808)	Straight (T202-0808)	Right Hand Gauge	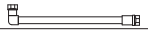	GA4905034
51	9900mm ( )	90 Deg (T226-0808)	Straight (T202-0808)	Left Hand Gauge	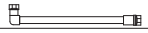	GA4905034
52	880mm (1B,1Y)	90 Deg (T205-0404)	Straight (T202-0404)	Pressure to Bi-Fold Block	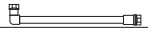	GA5067129
53	910mm (2B,1Y)	90 Deg (T205-0404)	Straight (T202-0404)	Pressure to Bi-Fold Block	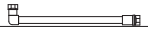	GA5067119
54	300mm x 2	Straight (T202-0404)	Straight (T202-0404)	Bi-Fold Link	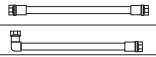	GA5067131
55	5260mm (1Y)	90 Deg (T226-0404)	Straight (T202-0404)	RV1 - RH Cylinder		GA5067126
56	4890mm (2Y)	90 Deg (T226-0404)	Straight (T202-0404)	RV2 - RH Cylinder		GA5067127
57	5185mm (1B)	90 Deg (T226-0404)	Straight (T202-0404)	LV1 - LH Cylinder		GA5067270
58	5020mm (2B)	90 Deg (T226-0404)	Straight (T202-0404)	LV2 - LH Cylinder		GA5067271
Fill Pump With Spool						
59	2480mm (1B)	45 Deg (T227-0808)	Straight (T202-0808)	Spool to Pump A		GA4905032
60	2405mm (1R)	45 Deg (T227-0808)	Straight (T202-0808)	Spool to Pump B	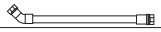	GA4905033
61	000mm	( )	( )	oo	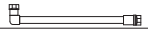	GA
62	000mm	( )	( )	oo	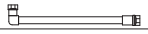	GA
Ultraglide XT Hoses						
70	330mm (1B)	90Deg (T205-0404)	90Deg (T205-0404)	Pressure Hose	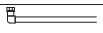	GA3500092
71	360mm (2B)	90Deg (T205-0404)	90Deg (T226-0404)	Tank Hose	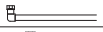	GA3500093
72	1465mm (1Y)	90Deg (T205-0404)	Straight (T202-0404)	1 on XT Block to RH Side Ram Rod End	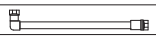	GA3500094
73	1265mm (2Y)	90Deg (T205-0404)	Straight (T202-0404)	2 on XT Block to RH Side Ram Solid End	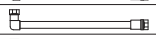	GA3500095
74	2160mm (1R)	90Deg (T205-0404)	Straight (T202-0404)	Crossover Hose, RH Solid End to LH Rod End	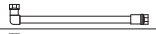	GA3500096
75	1970mm (2R)	90Deg (T205-0404)	Straight (T202-0404)	Crossover Hose, LH Solid End to RH Rod End	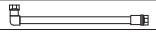	GA3500097
Centre Level Hoses						
76	1440mm (1Y)	Straight (T202-0404)	Straight (T202-0404)	Cylinder Rod end to A Port	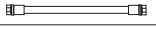	GA4905081
77	1245mm	Straight (T202-0404)	Straight (T202-0404)	Cylinder Base to B Port	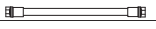	GA4905082

Plumbing - Boom Valves

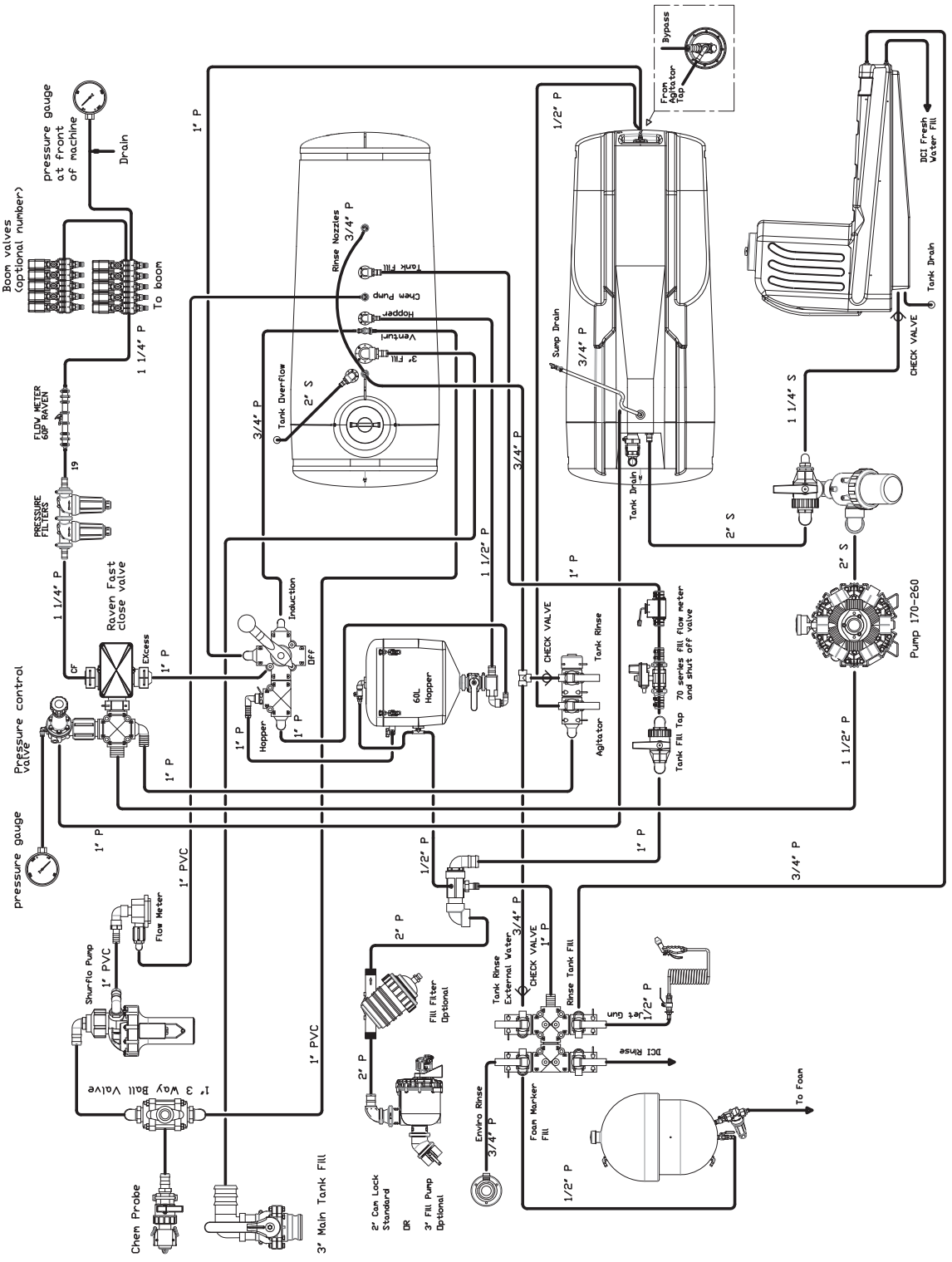

Plumbing - RapidFlow System

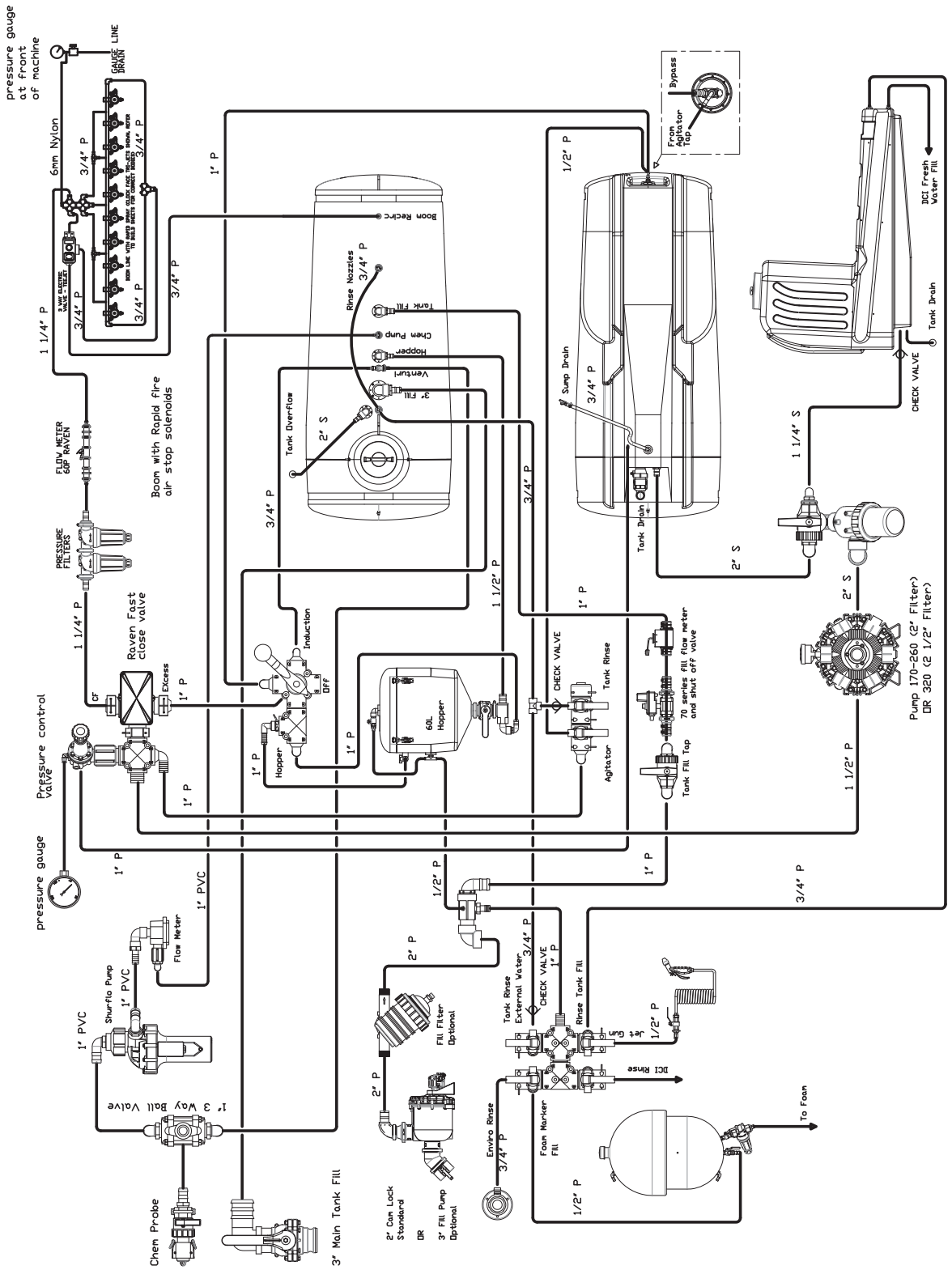

Pneumatics - Airbag & RapidFire

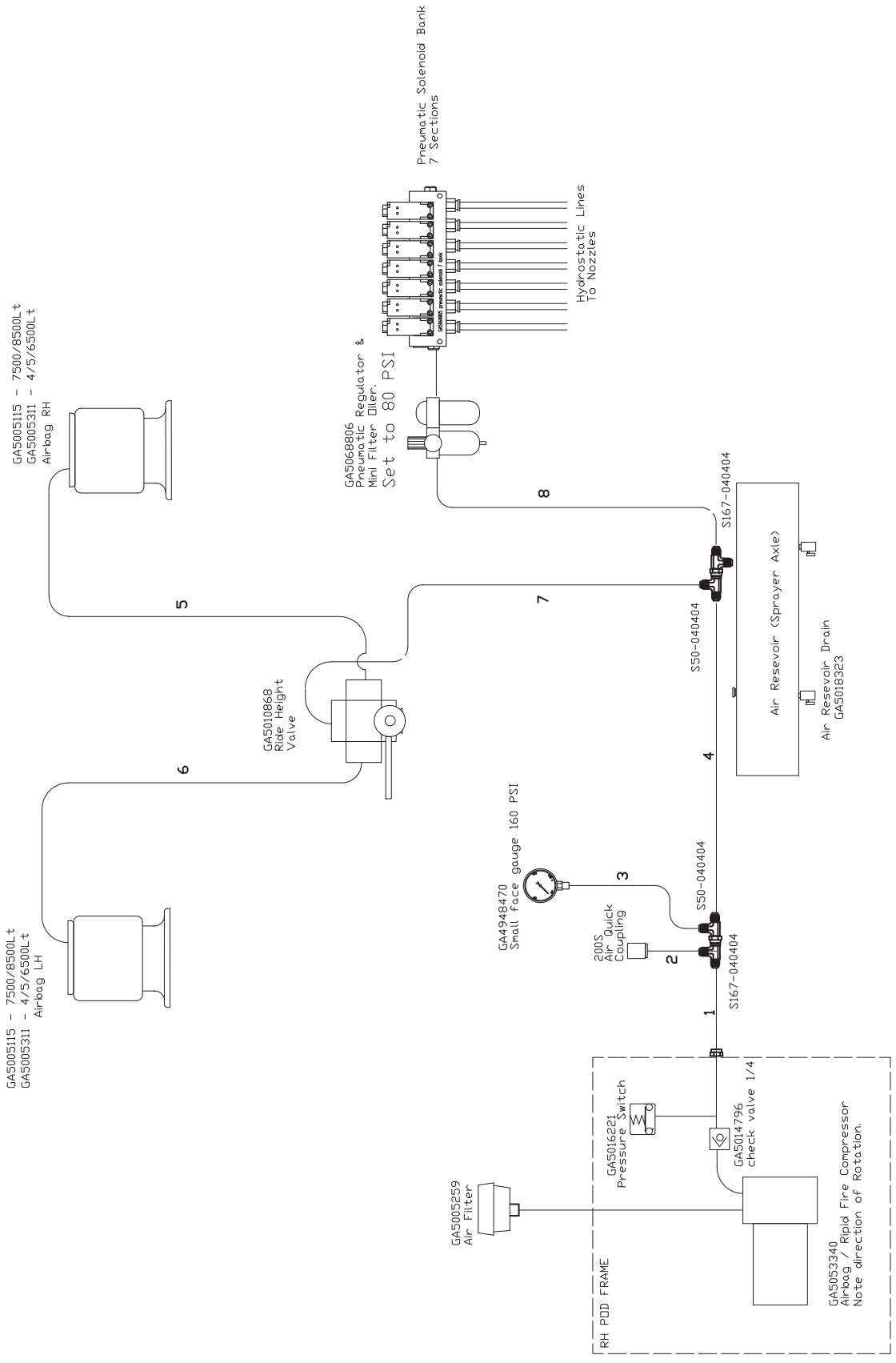

Pneumatics - Airbag & Foam Marker

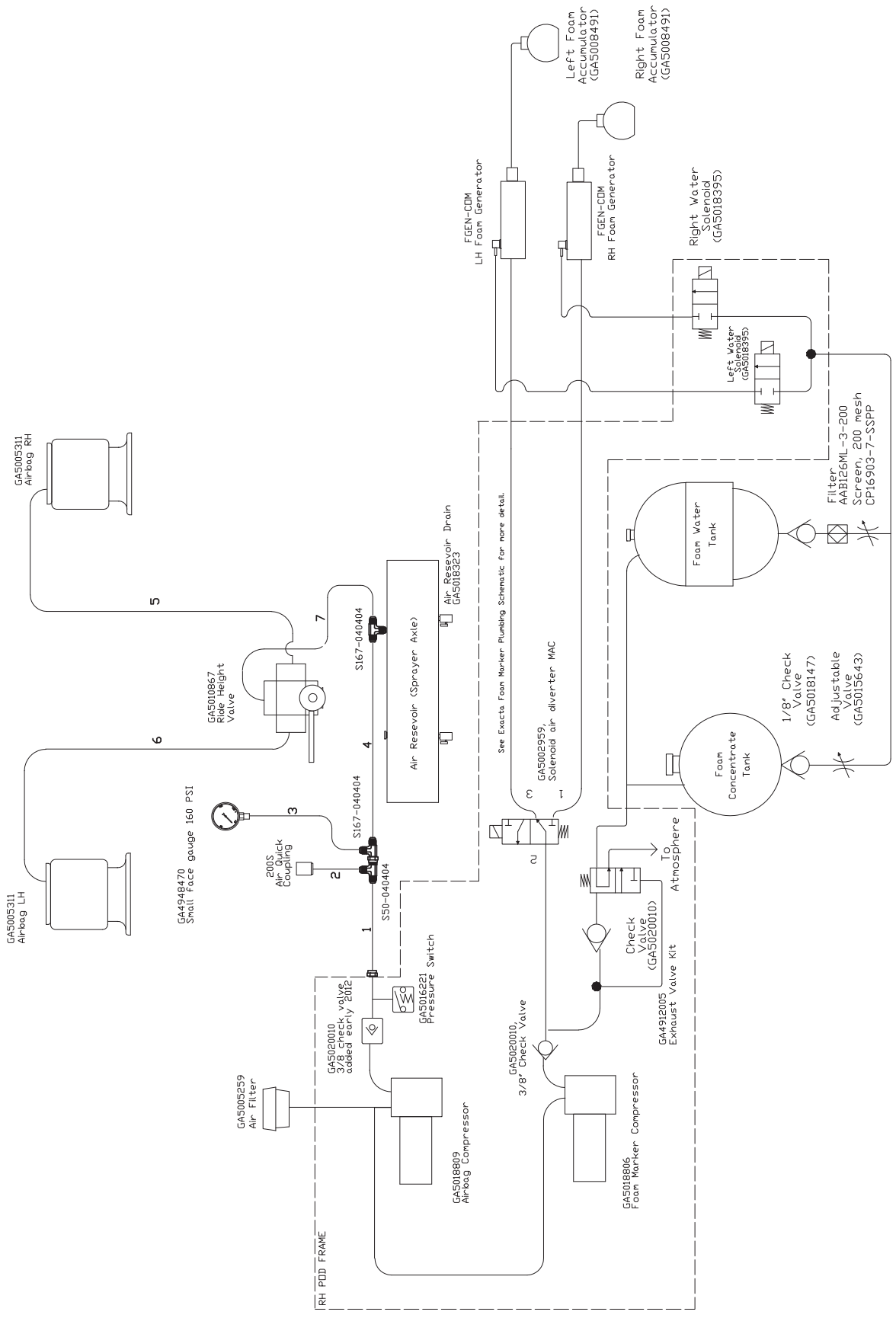

Pneumatics - Hose List

HOSE NO.	Machine.	HOSE SIZE	LENGTH	END FITTING	END FITTING	DESCRIPTION	QTY	ORIENTATION	PART NUMBER
1	4-6500	1/4" BLUE	1300mm	T202-0404	T202-0404	RH POD to tee near pull	1		
	7/8500	1/4" BLUE	1400mm	T202-0404	T202-0404	RH POD to tee near pull	1		
2	4-6500	1/4" BLUE	1400mm	T202-0404	T205-0404	Tee near pull to Air coupling on LHS POD	1		
	7/8500	1/4" BLUE	1500mm	T202-0404	T205-0404	Tee near pull to Air coupling on LHS POD	1		
3	4-6500 7/8500	1/4" BLACK	2700mm	T202-0404	T205-0404	Tee near pull to Air gauge on front	1		
4	4-6500	1/4" BLUE	3400mm	T202-0404	T202-0404	Tee near pull to air tank (axle)	1		
	7500	1/4" BLUE	3900mm	T202-0404	T202-0404	Tee near pull to air tank (axle)	1		
	8500	1/4" BLUE	4400mm	T202-0404	T202-0404	Tee near pull to air tank (axle)	1		
5	4-6500	1/4" BLUE	1220mm	T202-0404	T205-0404	Ride height valve to right hand air bag	1		
	7/8500 N	1/4" BLUE	1500mm	T202-0404	T205-0404	Ride height valve to right hand air bag	1		GA4912152
	7/8500 W	1/4" BLUE	1800mm	T202-0404	T205-0404	Ride height valve to right hand air bag	1		
6	4-6500	1/4" BLUE	950mm	T202-0404	T205-0404	Ride height valve to left hand air bag	1		
	7/8500 N	1/4" BLUE	800mm	T202-0404	T205-0404	Ride height valve to left hand air bag	1		same
	7/8500 W	1/4" BLUE	800mm	T202-0404	T205-0404	Ride height valve to left hand air bag	1		GA4912151
7	4-6500	1/4" BLUE	400mm	T202-0404	T205-0404	Air tank to ride height valve	1		same
	7/8500 N	1/4" BLUE	500mm	T202-0404	T205-0404	Air tank to ride height valve	1		GA4912150
	7/8500 W	1/4" BLUE	400mm	T202-0404	T205-0404	Air tank to ride height valve	1		same
8	4-6500 7/8500	1/4" BLUE	4700mm	T202-0404	T205-0404	Air tank to rapid fire on center section	1		

Transcal

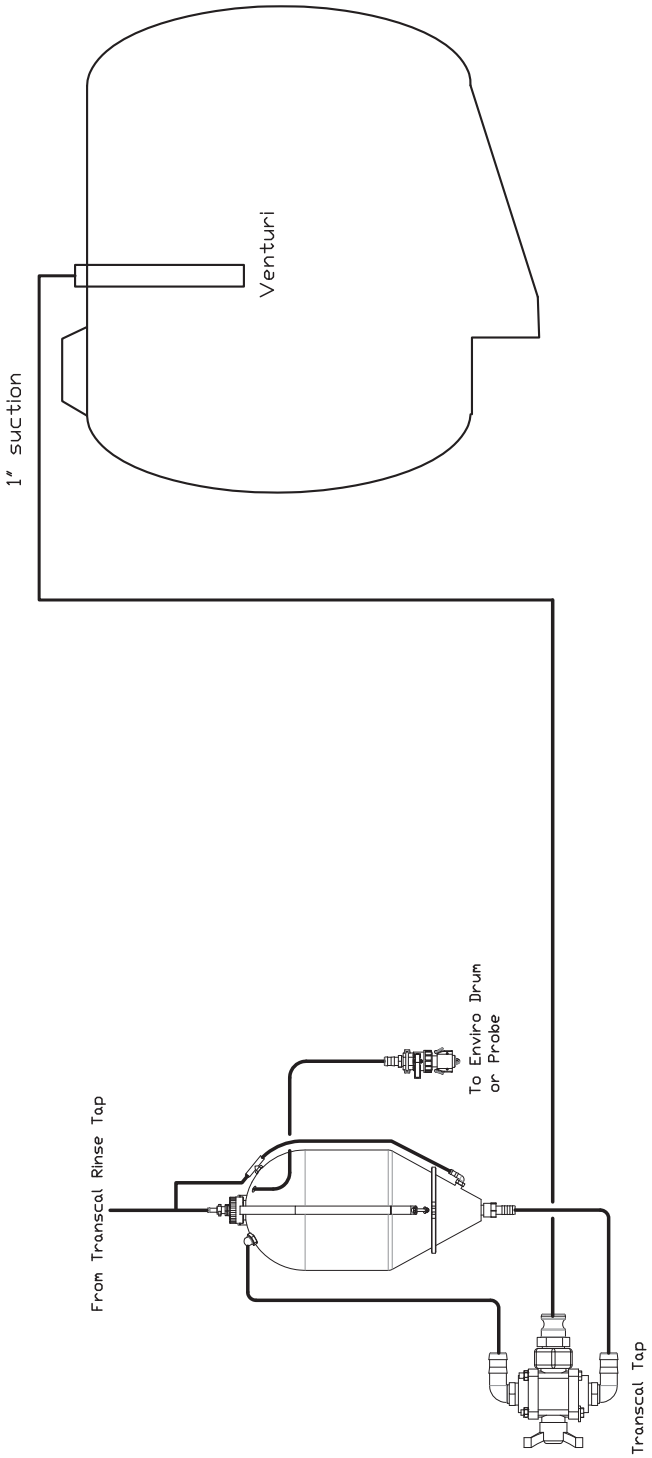
Venturi
1" suction
To Enviro Drum
or Probe
From Transcal Rinse Tap
Transcal Tap

Chapter 17

DECALS

Decals - Base Kit

PART NUMBER	DESCRIPTION
GA8700188	Decal Kit, Prairie Pro MY15, Base Kit

Decals - Base Kit

1

2

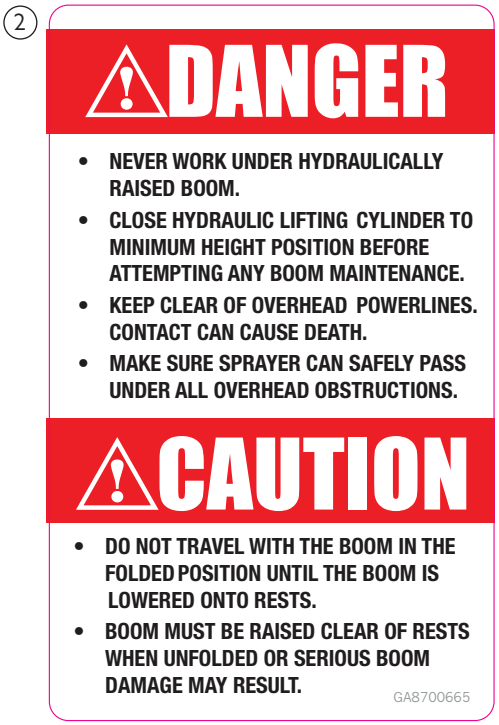

3

4

5

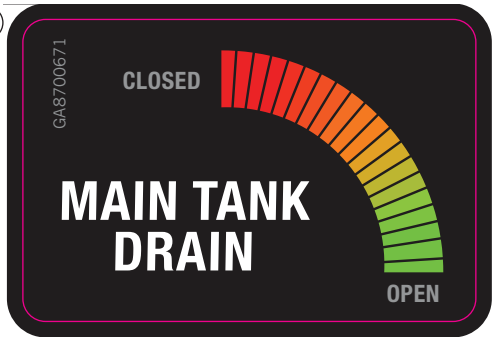

6

7

8

ITEM NO.	PART NUMBER	DESCRIPTION	QTY.
1	GA208EVO	Warning Hopper	1
2	GA209EVO	Danger/Caution	2
3	GA210EVO	Warning Platform	1
4	GA222EVO	Grease	57
5	GA212EVO	Main Tank Drain	1
6	GA5061900EVO	Spray Pressure Drain Valve	1
7	GA5015991EVO	Keep Hands Clear	10
8	GA220EVO	Three Tier System	1

Decals - Base Kit

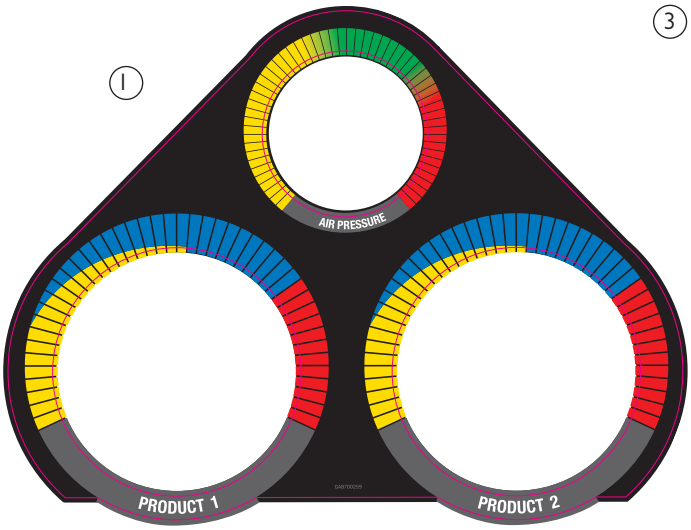

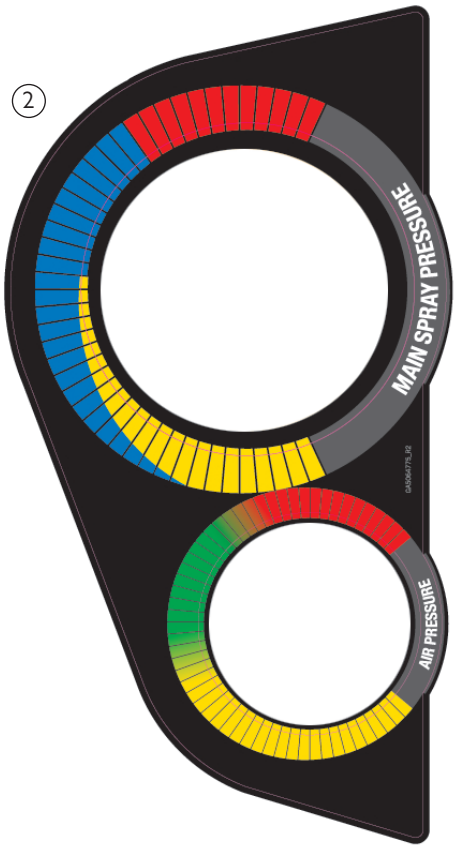

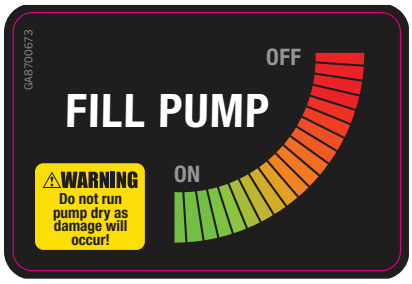

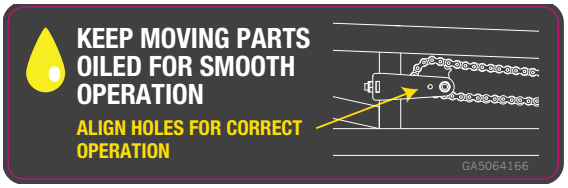

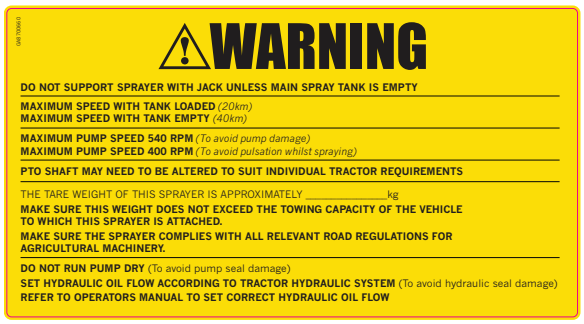

ITEM NO.	PART NUMBER	DESCRIPTION	QTY.
1	GA8700259	Decal, Dual Product, Spray Pressure - Air Pressure	1
2	GA5064775	Main spray pressure/Air pressure	
3	GA006EVO	Warning Check Wheel Nuts	2
4	GA5013EVO	Danger/Stand Clear	2
5	GA204EVO	Fill Pump	1
6	GA5064166	3D Breakaway Adjustment \ keep me oiled	2
7	GA207EVO	Warning	1

Decals - Base Kit

ITEM NO.	PART NUMBER	DESCRIPTION	QTY.
1	GA5062475	Flush Water Only	1
2	GA5062095	Chemical Induction	1
3	GA5062085EVO	Transcal	1
4	GA8700003	SuperFlow	1
5	GA5063370	Warning, Nozzles	2
6	GA5062485EVO	Foam Marker Concentrate	1
7	GA5062470	Foam Marker Water	1
8	GA5015971EVO	Drain Only	1
9	GA5062090EVO	Caution - Lower Steps	1

Decals - Base Kit

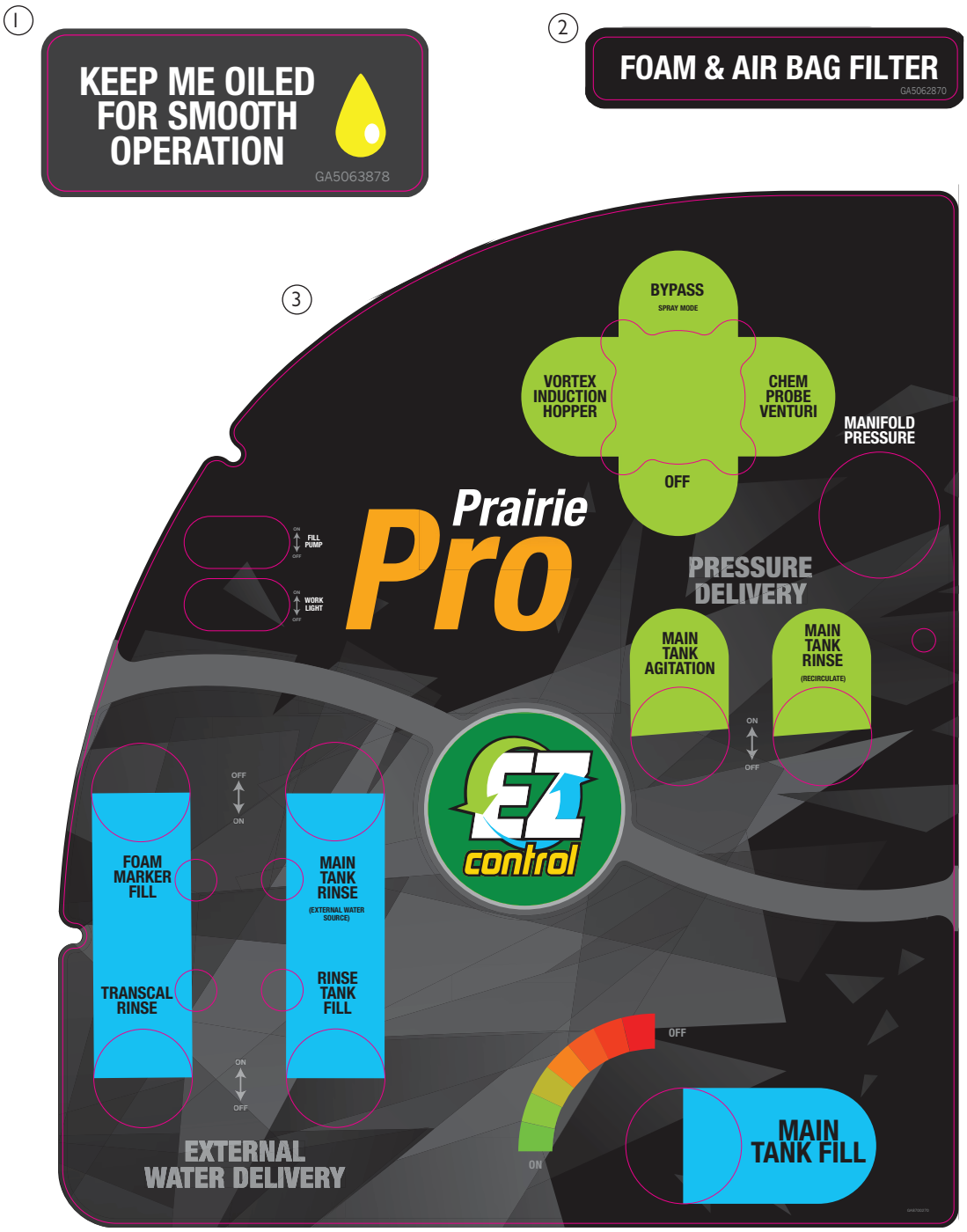

ITEM NO.	PART NUMBER	DESCRIPTION	QTY.
1	GA5063878	Keep Me Oiled	2
2	GA5062870	Foam & Airbag Filter	1
3	GA8700270	Decal, EZ Control Panel, Prairie Pro	1

Decals - Base Kit

ITEM NO.	PART NUMBER	DESCRIPTION	QTY.
1	GA5064169	Decal, Prairie Pro Boom ride and speed control valve	1
2	GA5064168	Decal, Prairie Pro Bi-fold right	1
3	GA5064167	Decal, Prairie Pro Bi-fold left	1
4	GA8700268	Decal, Outer Right Hand Pod Door Panel, Prairie Pro	1

Decals - Base Kit

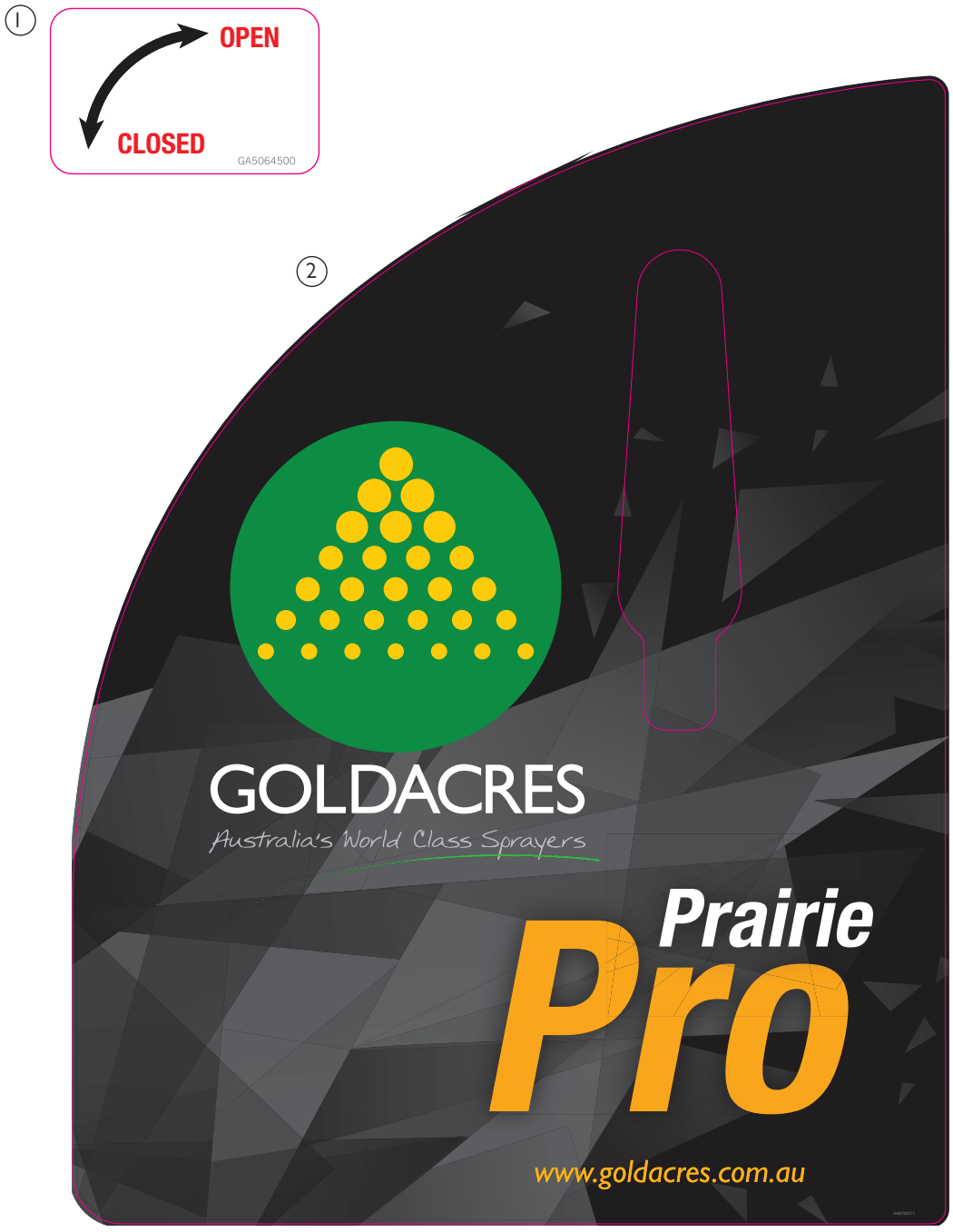

ITEM NO.	PART NUMBER	DESCRIPTION	QTY.
1	GA5064500	Decal, Open Close Tap	1
2	GA8700271	Decal, Outer Lef Hand Pod Door, Prairie Pro	2

Decals - Base Kit

1

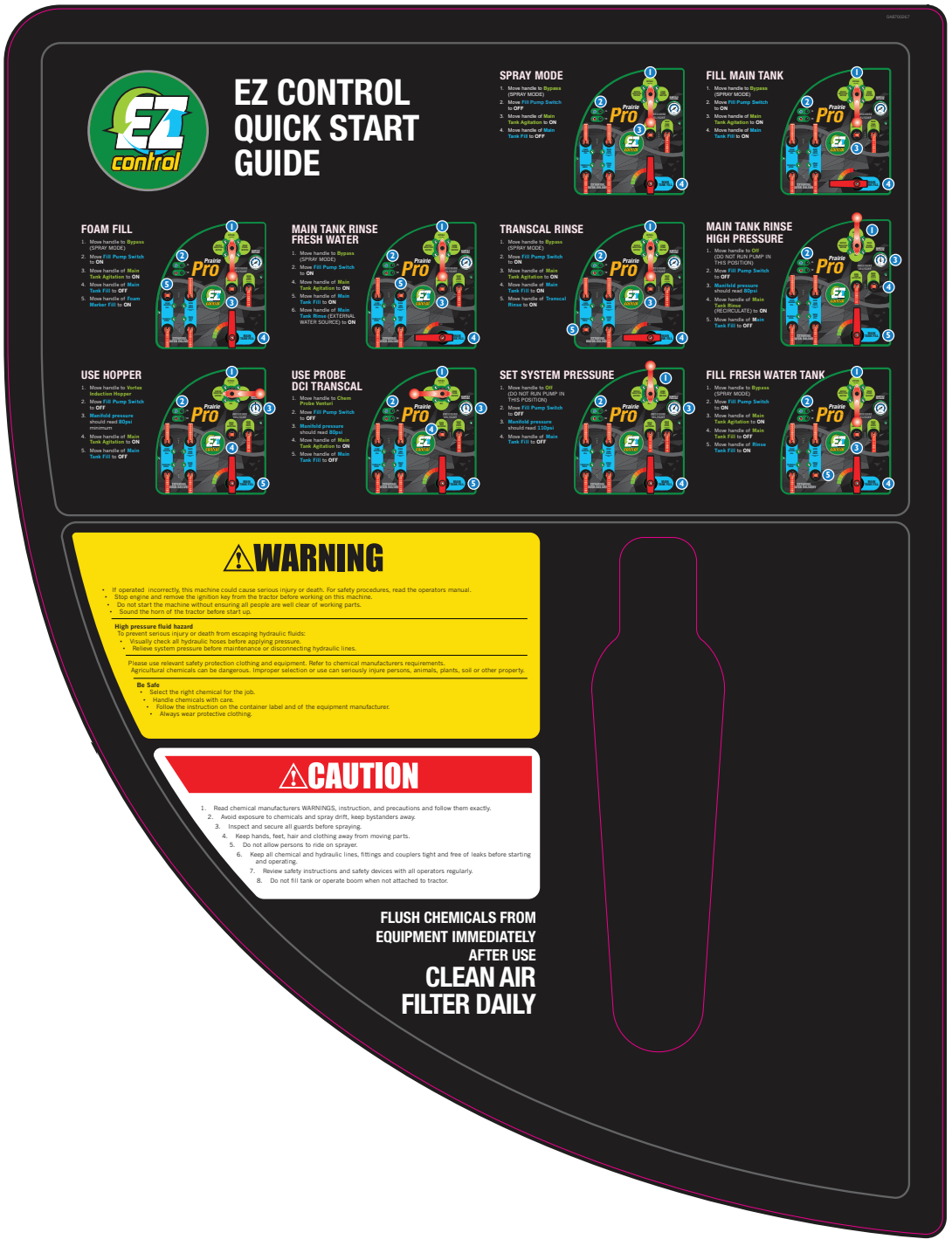

ITEM NO.	PART NUMBER	DESCRIPTION	QTY.
1	GA8700267	Decal, Inner Left Side Pod Door Panel, Prairie Pro	1

Decals - Base Kit

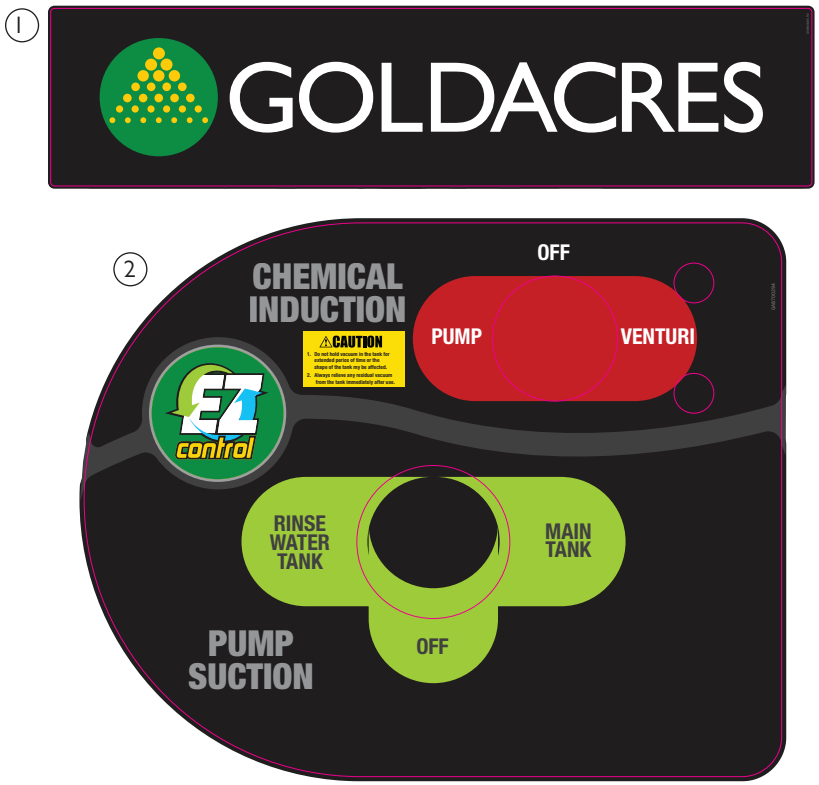

ITEM NO.	PART NUMBER	DESCRIPTION	QTY.
1	GA5061885	Goldacres	1
2	GA8700294	Transcal, Control Panel	1

Decals - Tank

1

ITEM NO.	PART NUMBER	DESCRIPTION	QTY.
	GA8700237	Decal, Tank, 4024, Left and Right, Goldacres Pro, MY15	
	GA8700238	Decal, Tank, 4028, Left and Right, Goldacres Pro, MY15	
	GA8700239	Decal, Tank, 4030, Left and Right, Goldacres Pro, MY15	
	GA8700240	Decal, Tank, 4033, Left and Right, Goldacres Pro, MY15	
	GA8700241	Decal, Tank, 4036, Left and Right, Goldacres Pro, MY15	
	GA8700242	Decal, Tank, 5024, Left and Right, Goldacres Pro, MY15	
	GA8700243	Decal, Tank, 5028, Left and Right, Goldacres Pro, MY15	
	GA8700260	Decal, Tank, 5030, Left and Right, Goldacres Pro, MY15	
	GA8700244	Decal, Tank, 5033, Left and Right, Goldacres Pro, MY15	
	GA8700245	Decal, Tank, 5036, Left and Right, Goldacres Pro, MY15	
	GA8700246	Decal, Tank, 6524, Left and Right, Goldacres Pro, MY15	
	GA8700247	Decal, Tank, 6528, Left and Right, Goldacres Pro, MY15	
1	GA8700248	Decal, Tank, 6530, Left and Right, Goldacres Pro, MY15	1
	GA8700249	Decal, Tank, 6533, Left and Right, Goldacres Pro, MY15	
	GA8700261	Decal, Tank, 6536, Left and Right, Goldacres Pro, MY15	
	GA8700250	Decal, Tank, 7524, Left and Right, Goldacres Pro, MY15	
	GA8700251	Decal, Tank, 7528, Left and Right, Goldacres Pro, MY15	
	GA8700252	Decal, Tank, 7530, Left and Right, Goldacres Pro, MY15	
	GA8700253	Decal, Tank, 7533, Left and Right, Goldacres Pro, MY15	
	GA8700262	Decal, Tank, 7536, Left and Right, Goldacres Pro, MY15	
	GA8700254	Decal, Tank, 8524, Left and Right, Goldacres Pro, MY15	
	GA8700255	Decal, Tank, 8528, Left and Right, Goldacres Pro, MY15	
	GA8700256	Decal, Tank, 8530, Left and Right, Goldacres Pro, MY15	
	GA8700257	Decal, Tank, 8533, Left and Right, Goldacres Pro, MY15	
	GA8700258	Decal, Tank, 8536, Left and Right, Goldacres Pro, MY15	

Decals - Switch Boxes

Ⓐ

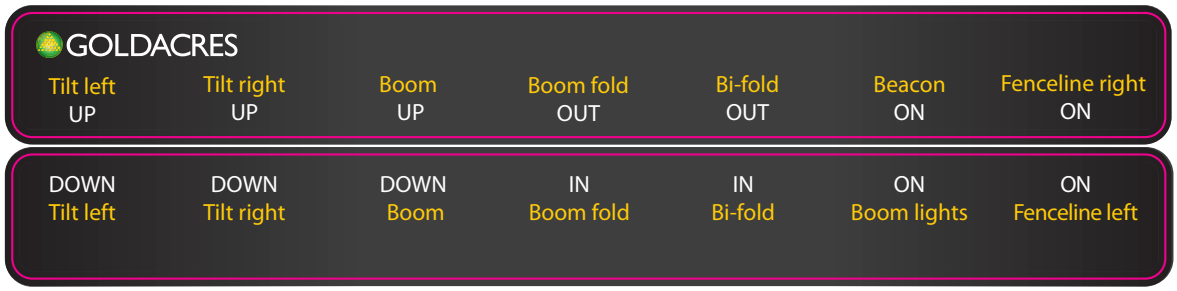

Ⓑ

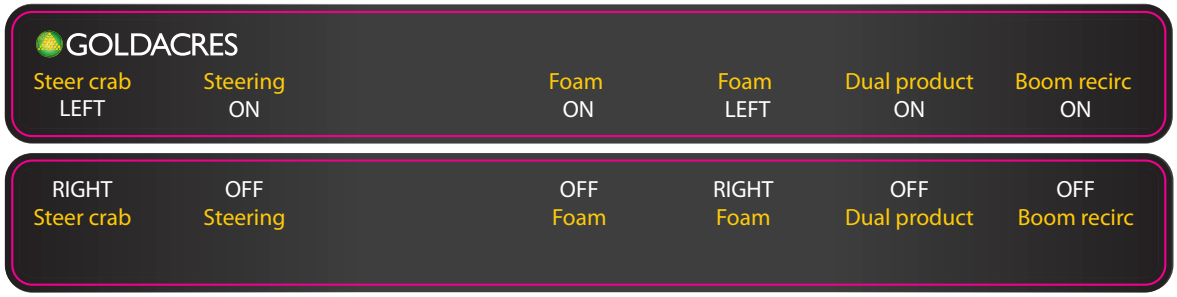

Ⓒ

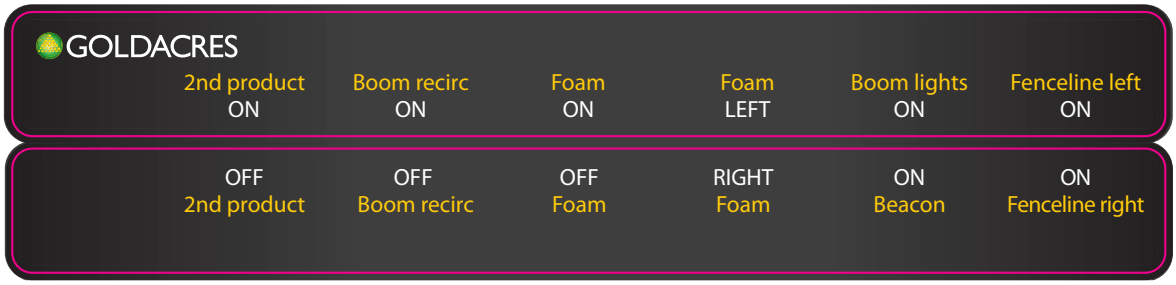

ITEM	PART NUMBER	DESCRIPTION	QTY.
A	GA4903710	Switch box A Prairie	1
B	GA4903715	Switch box B Prairie	1
C	GA4903720	Switch box C Prairie	1

Decals - Dry Sight Tube

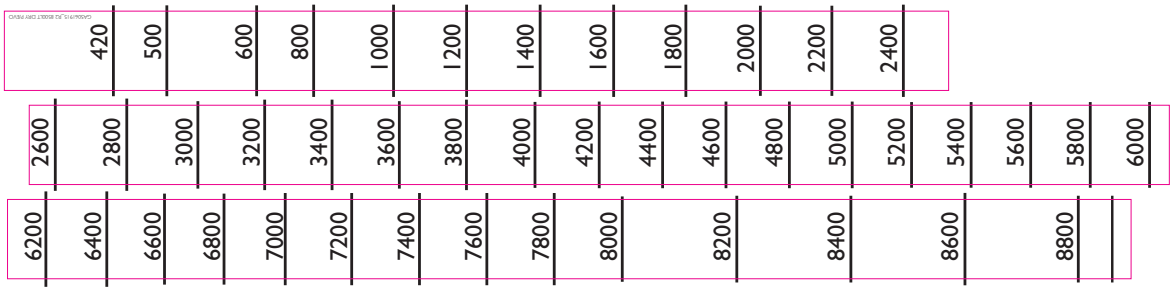

ITEM NO.	PART NUMBER	DESCRIPTION	QTY.
1	GA5070155	Decal, Dry sight tube, 5000L, Tow behind	1
2	GA5061880	Decal, Dry sight tube, 6500L, Tow behind	
3	GA5061887	Decal, Dry sight tube, 7500L, Tow behind	
4	GA5061915	Decal, Dry sight tube, 8500L, Tow behind	

Chapter 18

HYDRAULICS

Spool Valve Mounting Assembly

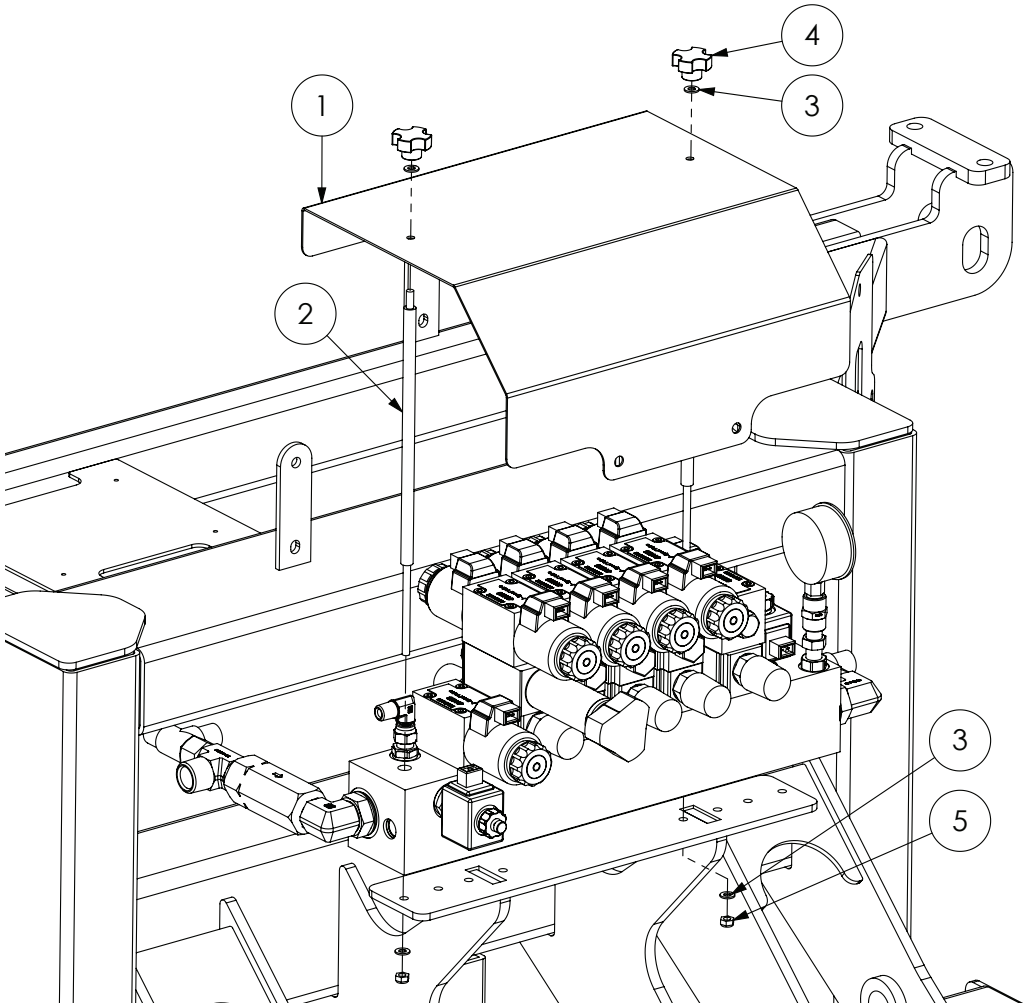

ITEM NO.	PART NUMBER	DESCRIPTION	QTY.
1	COMP0013	Spool valve cover, suit advance	1
2	MACH0035	Mounting Bolt, Suit Solenoid cover	2
3	GA5004437	Washer 6mm Flat SS	4
4	GA5069870	Knob, Star grip M6 x 32 Diameter	2
5	GA5048115	Nut M6 Nyloc ZP	2

Spool Valve Manifold Assembly

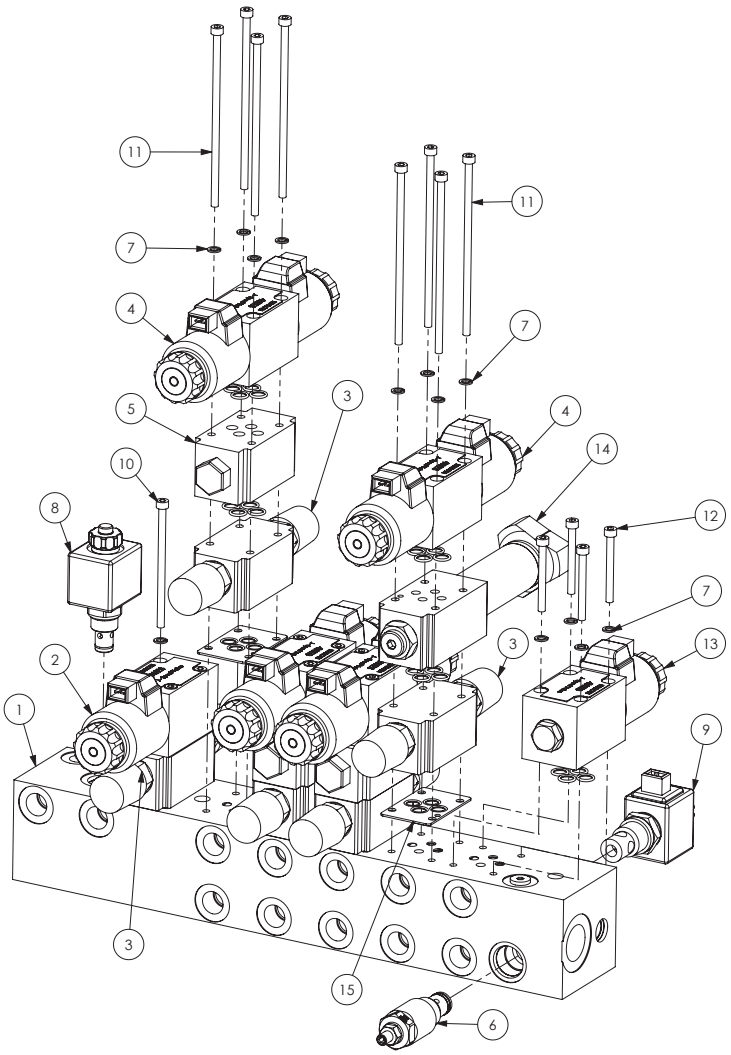

ITEM NO.	PART NUMBER	DESCRIPTION	QTY.
1	GA5047759	Manifiold, size 6 par, special bare	1
2	GA5047727	Valve Hydraulic, J spool, 12V, Single, 2 pin amp connector, Bosch	1
3	GA5047581	Hydraulic Valve, Flow control, NG6 A+B, Suit spool	5
4	GA5047726	Valve solenoid J spool 12v 2 pin amp connector, Bosch	4
5	GA5017335	Modular check valve	3
6	GA5047645	Cartridge Valve, Hydraulic Pressure Relief, Pilot Operated, Bosch	1
7	GA5003629	Washer 5mm Spring SS	24
8	GA5047734	Valve cartridge, Hydrualic solenoid, poppet 2/2-8-2 cav 12vdc 2 pin amp, Bosch	1
9	GA5047737	Valve cartridge, Hydraulic solenoid, AMP plug, 12V DC, Open centre	1
10	GA5067050	SHCS M5 x 90 ZP GR12.9	4
11	GA5048570	SHCS M5 x 130 ZP GR12.9	16
12	GA5054410	SHCS M5 x 50 ZP GR12.9	4
13	GA5047756	Valve, D spool hydraulic solenoid, centre level, 2 pin AMP, Bosch	1
14	GA5017373	Valve reducing modular	1
15	GA5047615	Plate Z2FS6 O-rings (spare part)	

Spool Valve Manifold Fittings

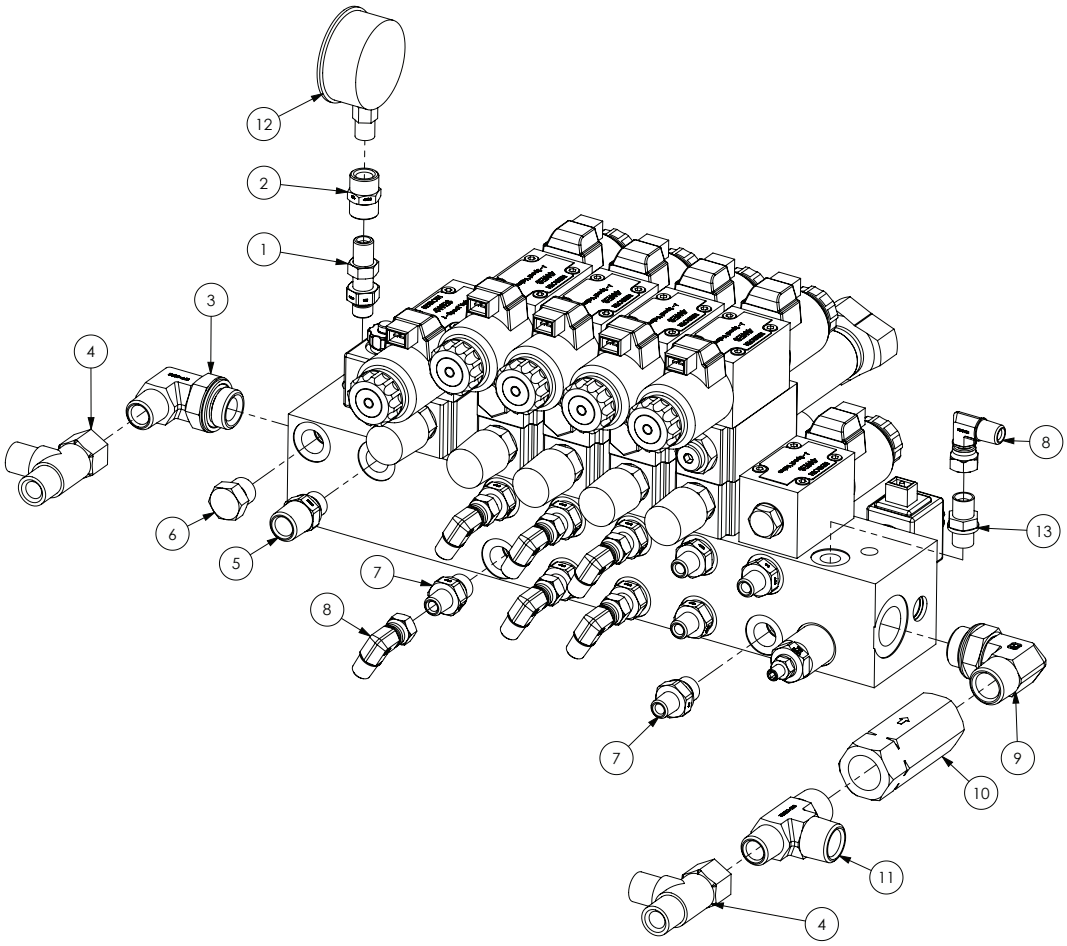

ITEM NO.	PART NUMBER	DESCRIPTION	QTY.
1	GA3500249	Hydraulic adaptor, Bulkhead nipple, 1/4" BSPP male x 1/4" BSPP male	1
2	GA3500211	Hydraulic adaptor, Socket, 1/4" BSPT female x 1/4" BSPT female	1
3	GA3500324	Hydraulic adaptor, Elbow, 90 degree, 1/2" BSPT male x 3/4" BSPP male O-ring	1
4	GA3500200	Hydraulic adaptor, Tee, 1/2" BSPT male x 1/2" BSPT male x 1/2" BSPP female swivel	2
5	GA3500309	Hydraulic adaptor, Nipple, 1/2" BSPT male x 3/8" BSPP male	1
6	GA3500300	Hydraulic adaptor, Plug, 3/8" BSPP male	1
7	GA3500307	Hydraulic adaptor, Nipple, 1/4" BSPT male x 3/8" BSPP male	10
8	GA3500332	Hydraulic adaptor, Elbow, 90 degree, 1/4" BSPT male x 1/4" BSPP female swivel	7
9	GA3500325	Hydraulic adaptor, Elbow, 90 degree, 3/4" BSPT male x 3/4" BSPP male O-ring	1
10	GA5002421	Check Valve, Hydraulic, 0 bar, 3/4" BSPP	1
11	GA3500272	Hydraulic adaptor, Tee, 3/4" BSPT male x 1/2" BSPT male x 3/4" BSPT male	1
12	GA5021455	Gauge, Pressure, Small face, 3500psi	1
13	GA3500306	Hydraulic adaptor, Nipple, 1/4" BSPT male x 1/4" BSPP male	1

Boom Lower Solenoid

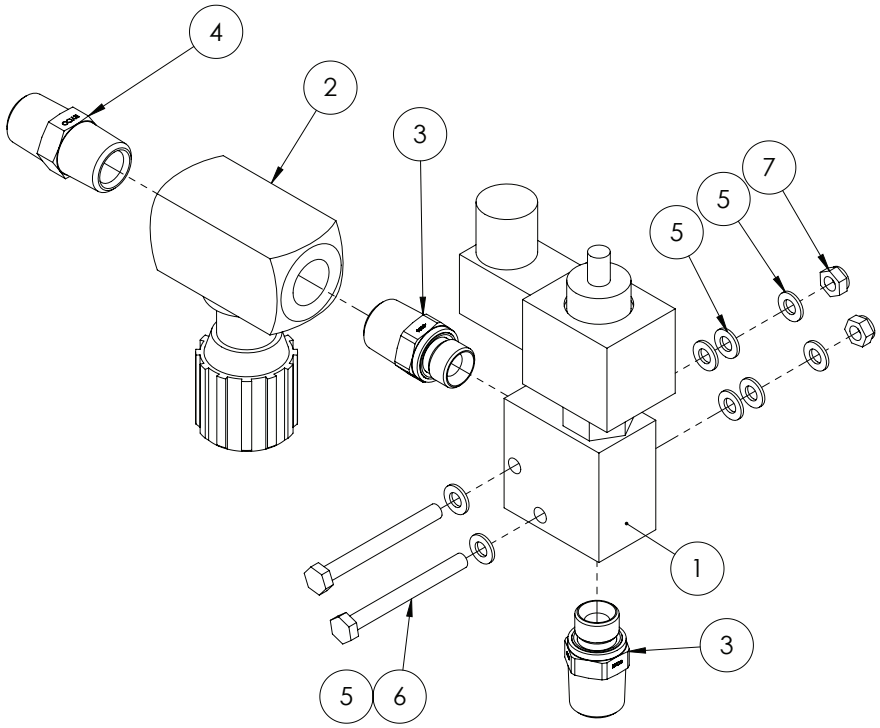

ITEM NO.	PART NUMBER	DESCRIPTION	QTY.
1	GA5047344	Hydraulic Solenoid Boom Lower Limit Cartridge and Body	1
2	GA5017393	Valve speed control 1/2" offset	1
3	GA3500309	Hydraulic adaptor, Nipple, 1/2" BSPT male x 3/8" BSPP male	2
4	GA3500223	Hydraulic adaptor, Nipple, 1/2" BSPT male x 1/2" BSPT male	1
5	GA5004437	Washer 6mm Flat SS	8
6	GA5004081	Bolt M6 x 40 ZP GR8.8	2
7	GA5048115	Nut M6 Nyloc	2

SPARE PARTS

PART NUMBER	DESCRIPTION
GA5047650	Coil DIN class H 12V DC IP65/S8 (suit unloader after 3-3-2008 and boom lower spool), Bosch
GA5010039	Din Hirschmann Connector Std Black suit C Top 3
GA5048580	Din Hirschmann Connector K4L12 LED.

Solenoid Valve - Bi-Fold

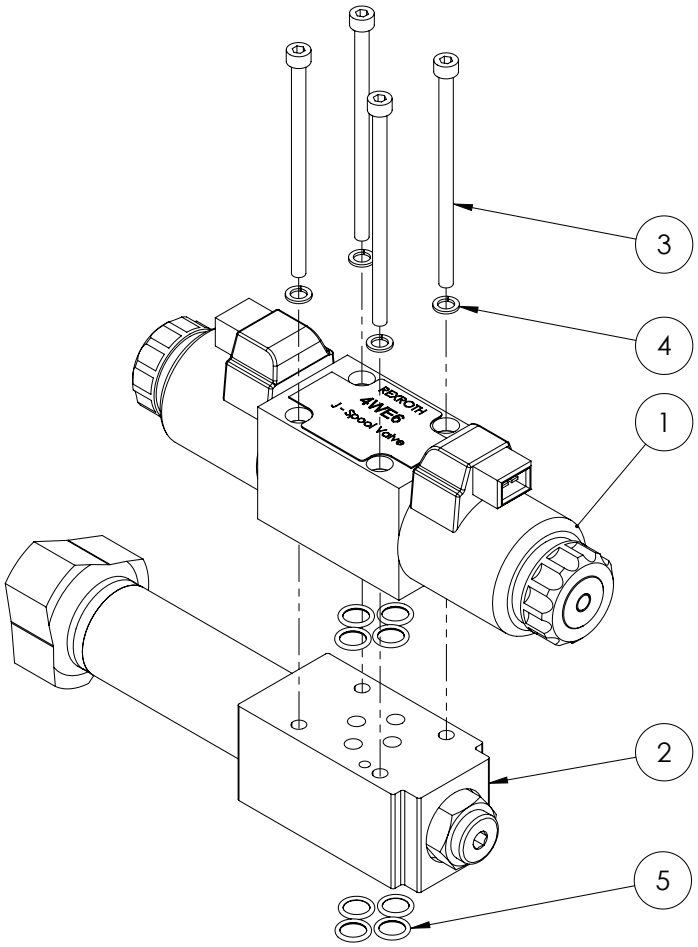

ITEM NO.	PART NUMBER	DESCRIPTION	QTY.
1	GA5047726	Valve solenoid J spool 12v 2 pin AMP connector	1
2	GA5017373	Valve reducing modular	1
3	GA5067050	SHCS M5 x 90 ZP GR12.9	4
4	GA5003629	Washer 5mm Spring SS	4
5	GA5047627	Seal kit - viton, Suit CEE Top Valve	1

Solenoid Valve - Smart Steer

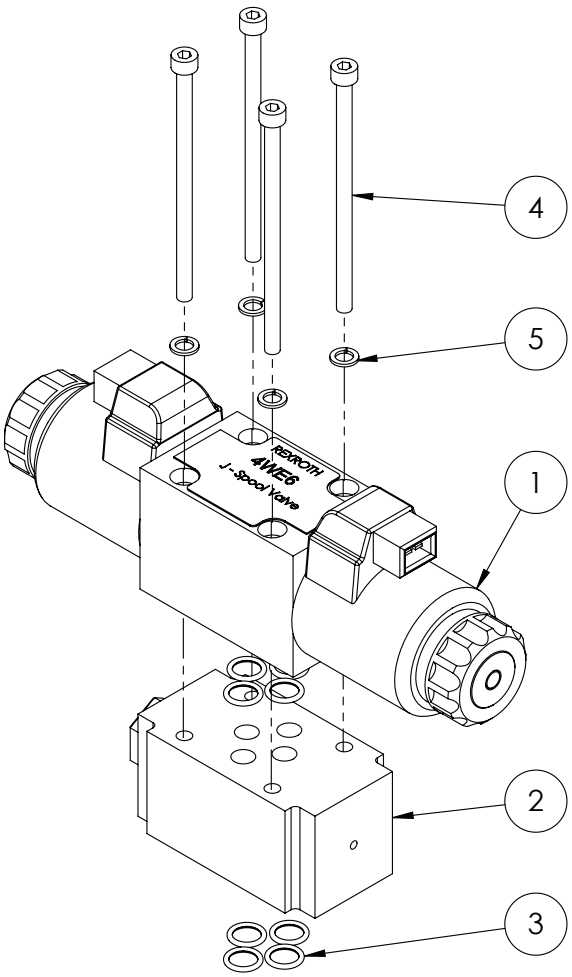

ITEM NO.	PART NUMBER	DESCRIPTION	QTY.
1	GA5047726	Valve solenoid J spool 12v 2 pin AMP connector	1
2	GA5047661	NG6 Check Module	1
3	GA5047627	Seal kit - viton, Suit CEE Top Valve	1
4	GA5067050	SHCS M5 x 90 ZP GR12.9	4
5	GA5003629	Washer 5mm Spring SS	4

Fill Pump Hydraulic Manifold Assembly

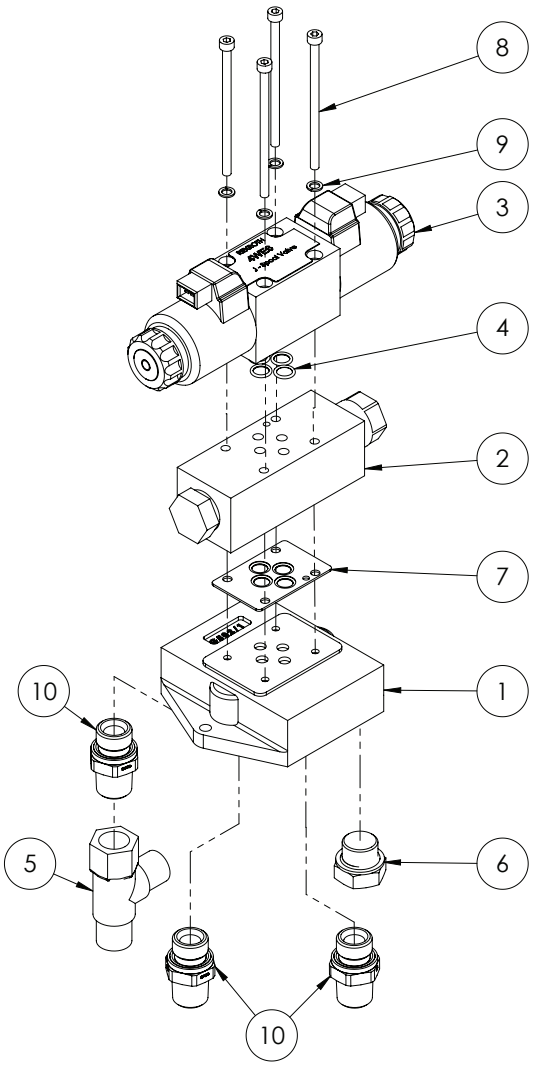

ITEM NO.	PART NUMBER	DESCRIPTION	QTY.
1	GA5016139	Hydraulic manifold, Single valve port, 1/2" inlets / outlets	1
2	GA5047583	Valve, pressure flow comp stackable	1
3	GA5047726	Valve solenoid J spool 12v 2 pin AMP connector	1
4	GA5047627	Seal kit - viton, Suit CEE Top Valve	1
5	GA3500200	Hydraulic adaptor, Tee, 1/2” BSPT male x 1/2” BSPT male x 1/2” BSPP female swivel	1
6	GA3500301	Hydraulic adaptor, Plug, 1/2” BSPP male	1
7	GA5047615	Plate Z2FS6 o-ring	1
8	GA5067050	SHCS M5 x 90 ZP GR12.9	4
9	GA5003629	Washer 5mm Spring SS	4
10	GA3500310	Hydraulic adaptor, Nipple, 1/2” BSPT male x 1/2” BSPP male	3

Bi-Fold Check Valve

Double Pilot Operated Check Valve LH

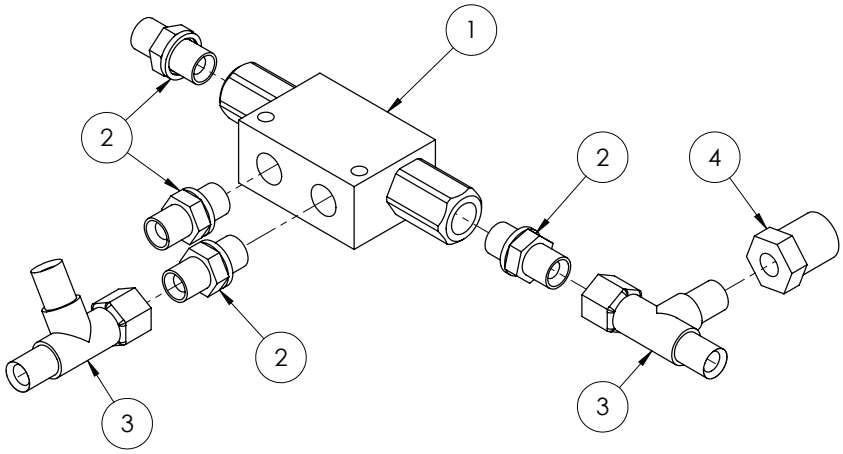

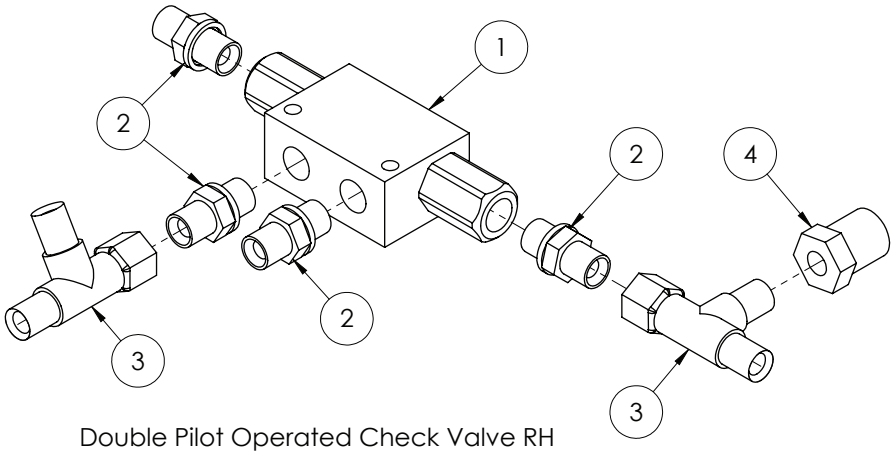

Double Pilot Operated Check Valve RH

ITEM NO.	PART NUMBER	DESCRIPTION	QTY.
1	GA5007957	Double pilot check (RA) 12LPM 1/4" BSPP	1
2	GA3500306	Hydraulic adaptor, Nipple, 1/4" BSPT male x 1/4" BSPP male	4
3	GA3500199	Hydraulic adaptor, Tee, 1/4 BSPT male x 1/4 BSPT male x 1/4 BSPP female	2
4	GA3500203	Hydraulic adaptor, Reducing bush, 1/2" BSPT male x 1/4" BSPT female	1

Pressure Reducing Valve Assembly

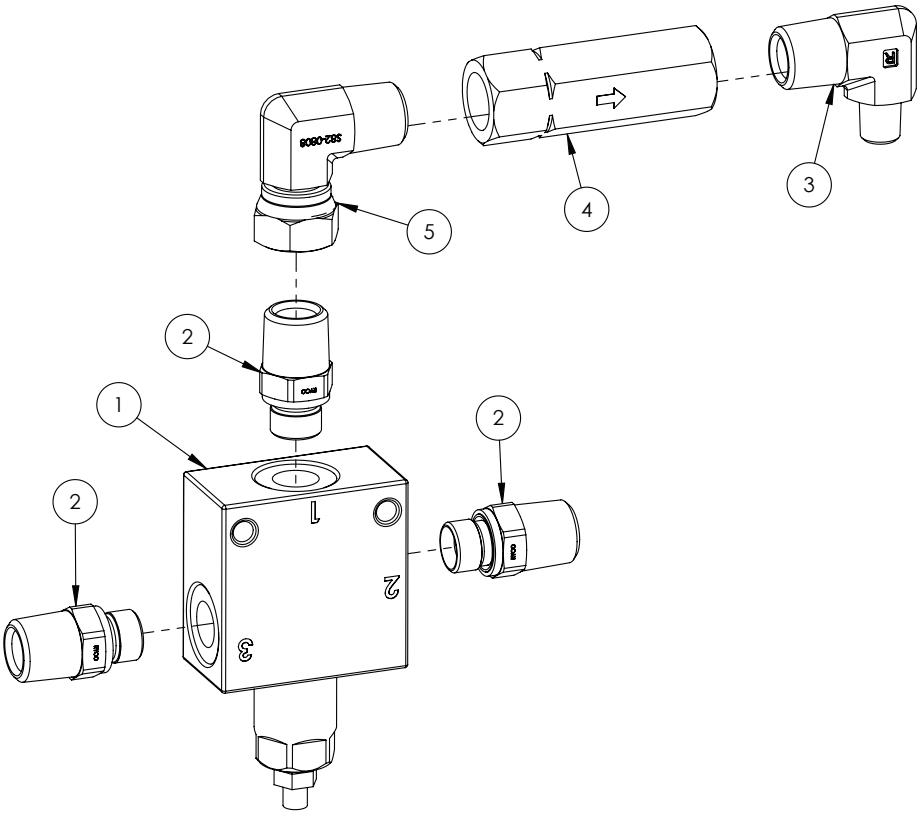

ITEM NO.	PART NUMBER	DESCRIPTION	QTY.
1	GA5047708	Valve, Pressure reducing, Hydraulic, 10 - 140bar	1
2	GA3500309	Hydraulic adaptor, Nipple, 1/2" BSPT male x 3/8" BSPP male	3
3	GA3500262	Hydraulic adaptor, Elbow, 90 degree, 1/2" BSPT male x 1/2" BSPT male	1
4	GA5007060	Valve, Check, Hydraulic, 1/2" BSPP female inlet & outlet, 45L/min flow, Maximum 320 Bar	1
5	GA3500333	Hydraulic adaptor, Elbow, 90 degree, 1/2" BSPT male x 1/2" BSPP female swivel	1

Hydraulic Accumulator Manifold

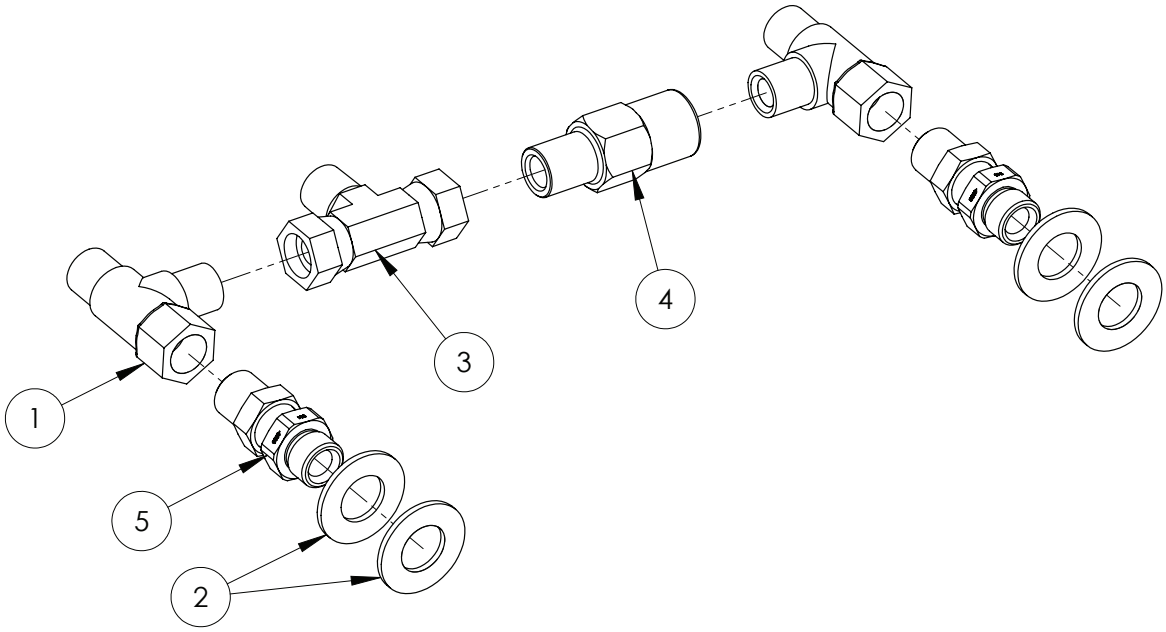

ITEM NO.	PART NUMBER	DESCRIPTION	QTY.
1	GA3500200	Hydraulic adaptor, Tee, 1/2" BSPT male x 1/2" BSPT male x 1/2" BSPP female swivel	2
2	GA5001045	Washer, 3/4", Flat ZP	4
3	GA3500336	Hydraulic adaptor, Tee, 1/2" BSPP female swivel x 1/2" BSPT male x 1/2" BSPP female swivel	1
4	GA4572110	Hydraulic adaptor, Fitting to suit accumulator, 1/2" BSPT male x 1/2" BSPT female	1
5	GAS99-603	Hydraulic adaptor, Bulkhead nipple, 1/2" BSP male x 1/2" BSP male	2

Hydraulic Cylinder - Boom Lift - Standard

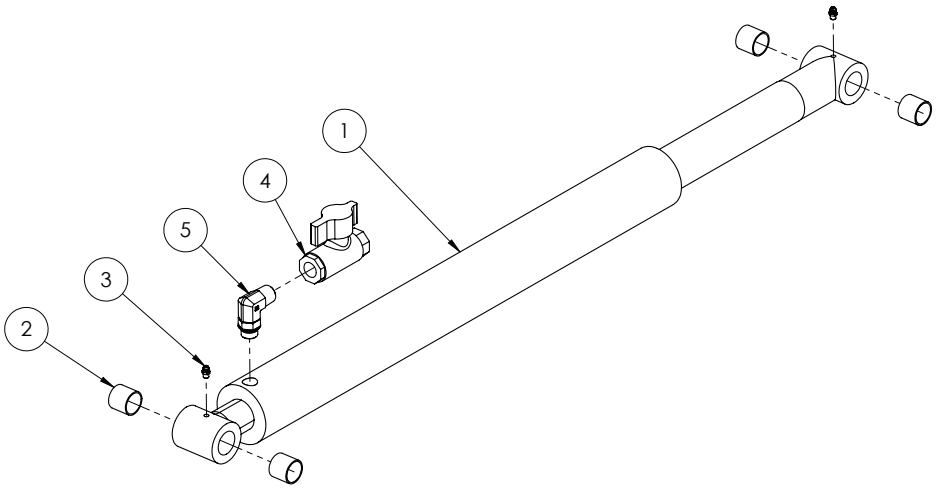

ITEM NO.	PART NUMBER	DESCRIPTION	QTY.
-	GA5052740	Seal kit, 2 1/2” bore x 2” rod	-
-	GA5055510	Kit, Rod Eye, Weld on, Suit lift cylinder 2007 onward	-
1	GA5070082	Hydraulic cylinder - 2 1/2" bore, 2" rod, 21" Stroke	1
2	GA5065487	Glacier Bush 1” ID x 1” long	4
3	GA5012203	Grease nipple, Short, 1/4” UNF	2
4	GA5000835	Valve, Ball, Hydraulic, 1/2" female thread inlet / outlet	1
5	GA3500349	Hydraulic adaptor, 90 degree Elbow, 1/2” BSP x 3/4” UNO	1

Hydraulic Cylinder - Boom Lift - Suit 42m

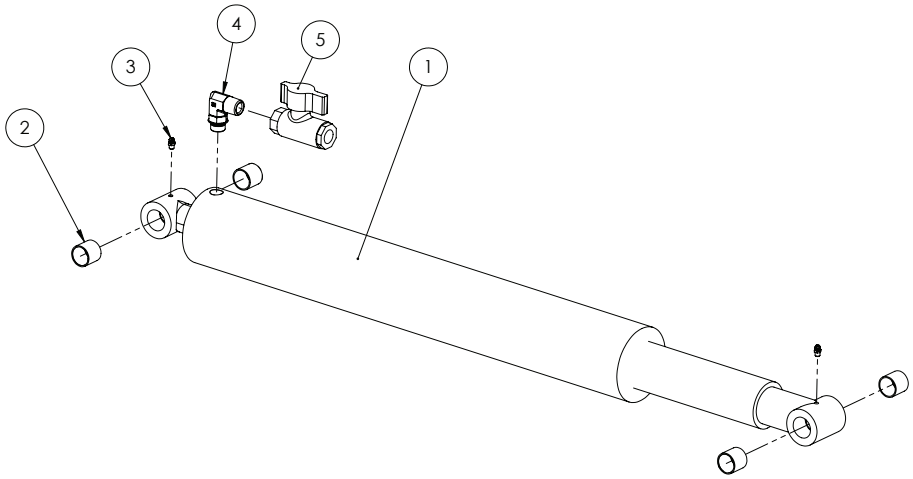

ITEM NO.	PART NUMBER	DESCRIPTION	QTY.
-	GA5052731	Seal kit, suit 3” bore x 2 1/2” rod	-
1	GA5070079	Hydraulic cylinder - 3" bore x 2 1/2" rod, 21" Stroke	1
2	GA5065487	Glacier Bush 1” ID x 1” long	4
3	GA5012203	Grease nipple, Short, 1/4” UNF	2
4	GA3500349	Hydraulic adaptor, Elbow, 90 degree, 1/2” BSPT male x 3/4” UN male O-ring	1

Hydraulic Cylinder - Boom Tilt

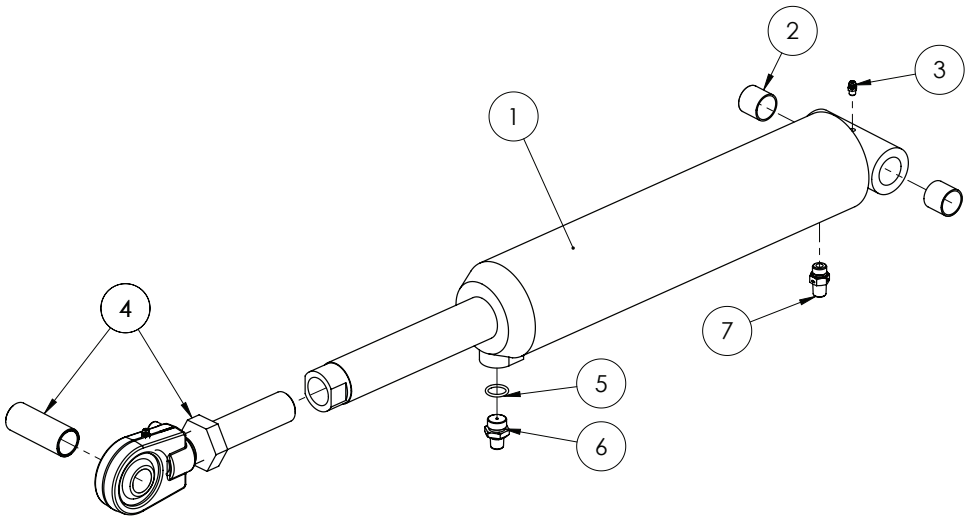

ITEM NO.	PART NUMBER	DESCRIPTION	QTY.
-	GA5052730	Seal kit, suit 3 1/2" bore x 1 3/4" Rod	-
1	GA5065051	Hydraulic cylinder, 3 1/2" bore x 1 3/4" rod x 5" stroke	1
2	GA5065487	Glacier Bush 1" ID x 1" long	2
3	GA5012203	Grease nipple, Short, 1/4" UNF	2
4	GA5052762	Hydraulic tilt cylinder adjusting rod end, Ball End with nut, suit 3 1/2" x 5" tilt ram GA5065051	1
5	GA5078121	O-ring BSPP 1/2"	1
6	L068A	Reducing restrictor nipple, 3/4" UNO x 1/4" BSPT, 1.5mm orifice	1
7	GA3500359	Hydraulic adaptor, Nipple, 1/4" BSPT male x 3/4" UN male O-ring	1

Hydraulic Cylinder - Boom Fold RH

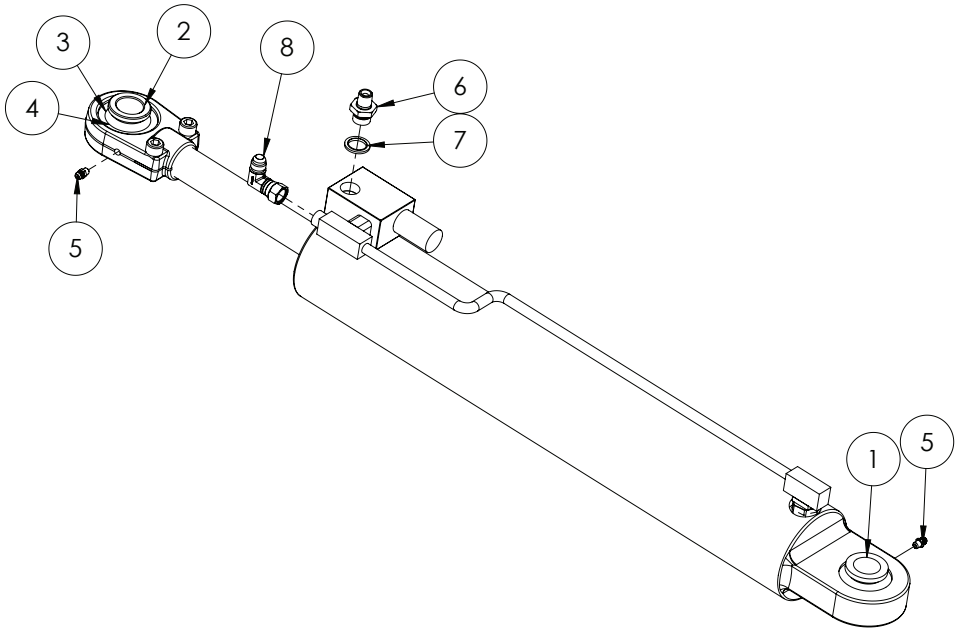

ITEM NO.	PART NUMBER	DESCRIPTION	QTY.
-	GA5018540	Hydraulic cylinder, 3” bore x 1 1/4” rod x 18” stroke (with external phasing valve)	-
-	GA5052680	Seal Kit, suit 3” bore x 1 1/4” rod, suit GA5018540	-
-	GA3500098	Rod, suit Hydraulic Fold Cylinder GA5018538, GA5018540, GA5018542	-
-	GA5071245	Phasing Block Assembly, with pipe, suit GA5018540 and GA5018542	-
1	GA5021930	Large bearing bush, Suit screw on rose end	1
2	GA5021925	Small bearing bush, Suit screw on rose end	3
3	GA5067605	Bearing, suit screw on rose end, GEG 30 ES 2RS	2
4	GA5067610	Circlip, suit bearing screw on rose end, RTW 55	2
5	GA5012203	Grease nipple, Short, 1/4” UNF	2
6	GA4572545	Restrictor Nipple, 1/4” BSPT to 3/8” UNO 1.5mm orifice	1
7	GA3500005	Hydraulic Seal, Bonded, 3/8”, RL21, BSPP	1
8	GA3500002	Hydraulic Coupling, Elbow, 90 Degree, 9/16" male JIC, 9/16" Female Swivel JIC	1

Hydraulic Cylinder - Boom Fold LH

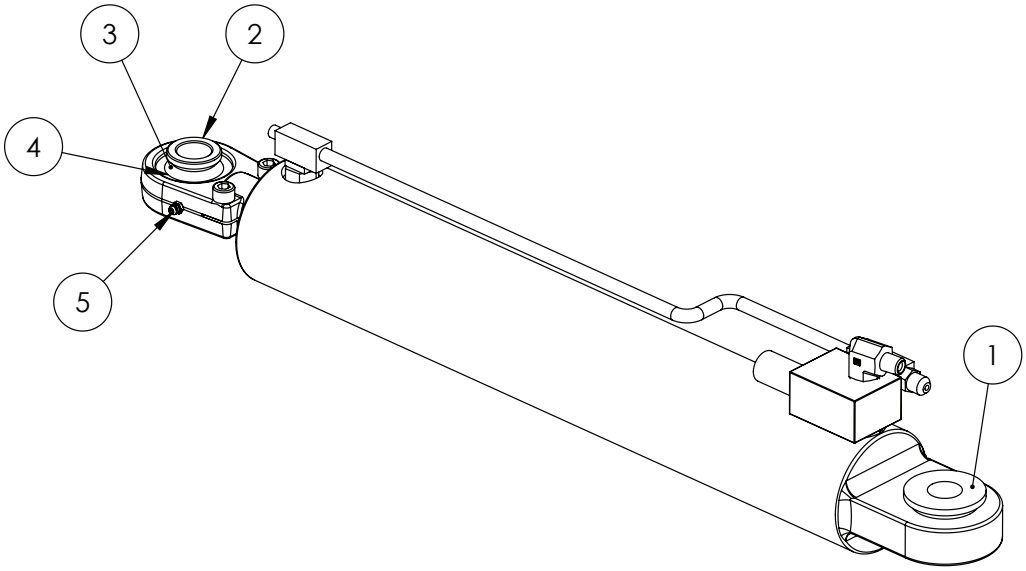

ITEM NO.	PART NUMBER	DESCRIPTION	QTY.
-	GA5018542	Hydraulic Cylinder, External phasing, 3 1/4" bore x 1 1/4" rod x 18" stroke	-
-	GA5052685	Seal Kit, suit 3 1/4 " bore x 1 1/4" rod, suit GA5018542	-
-	GA5071245	Phasing Block Assembly, with pipe, Fold Cylinder, GA5018540 and GA5018542	-
1	GA5021930	Large bearing bush, Suit screw on rose end	1
2	GA5021925	Small bearing bush, Suit screw on rose end	3
3	GA5067605	Bearing, suit screw on rose end, GEG 30 ES 2RS	2
4	GA5067610	Circlip, suit bearing screw on rose end, RTW 55	2
5	GA5012203	Grease nipple, Short, 1/4" UNF	2

Hydraulic Cylinder - Centre Leveling

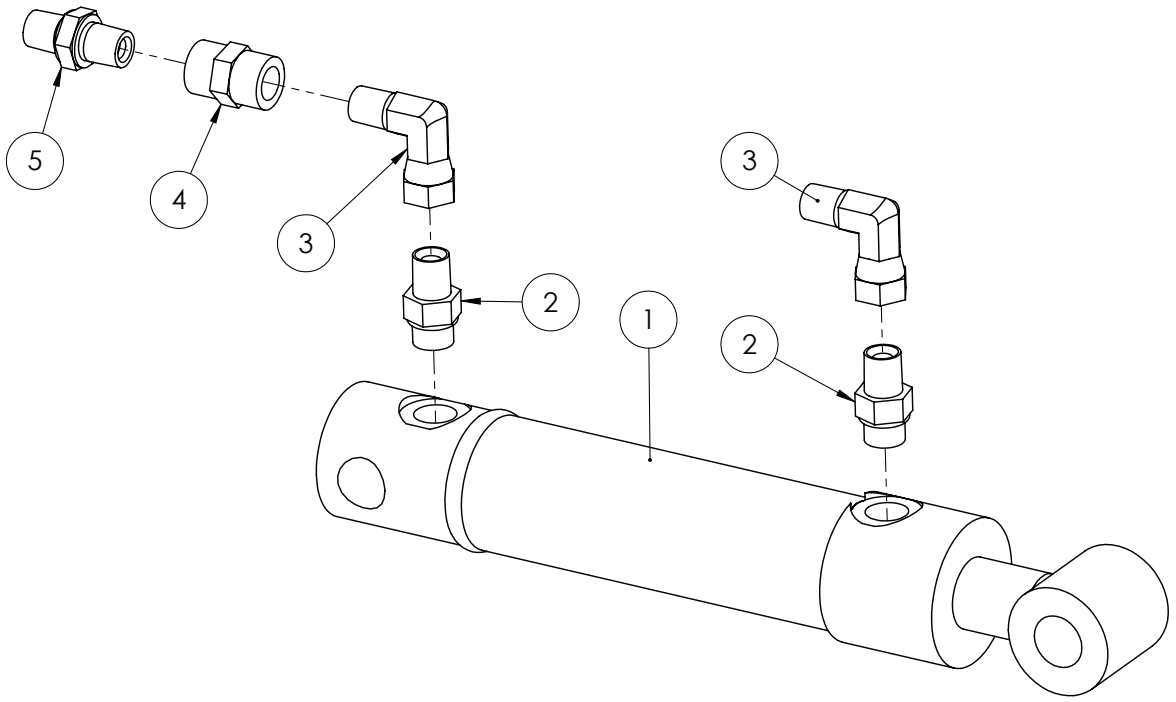

ITEM NO.	PART NUMBER	DESCRIPTION	QTY.
1	GA5016122	Hydraulic Ram 1 1/2" Bore x 1" rod x 100mm stroke, pin eye ends double acting	1
2	GA3500358	Hydraulic adaptor, Nipple, 1/4” BSPT male x 9/16” UN male O-ring	2
3	GA3500332	Hydraulic adaptor, Elbow, 90 degree, 1/4” BSPT male x 1/4” BSPP female swivel	2
4	GA3500211	Hydraulic adaptor, Socket, 1/4” BSPT female x 1/4” BSPT female	1
5	GA4562025	Restrictor nipple 1/4” BSPT 0.5mm orifice	1
-	GA5052750	Seal Kit, suit 1 1/2” bore x 1” rod	-

Hydraulic Cylinder - Bi-Fold

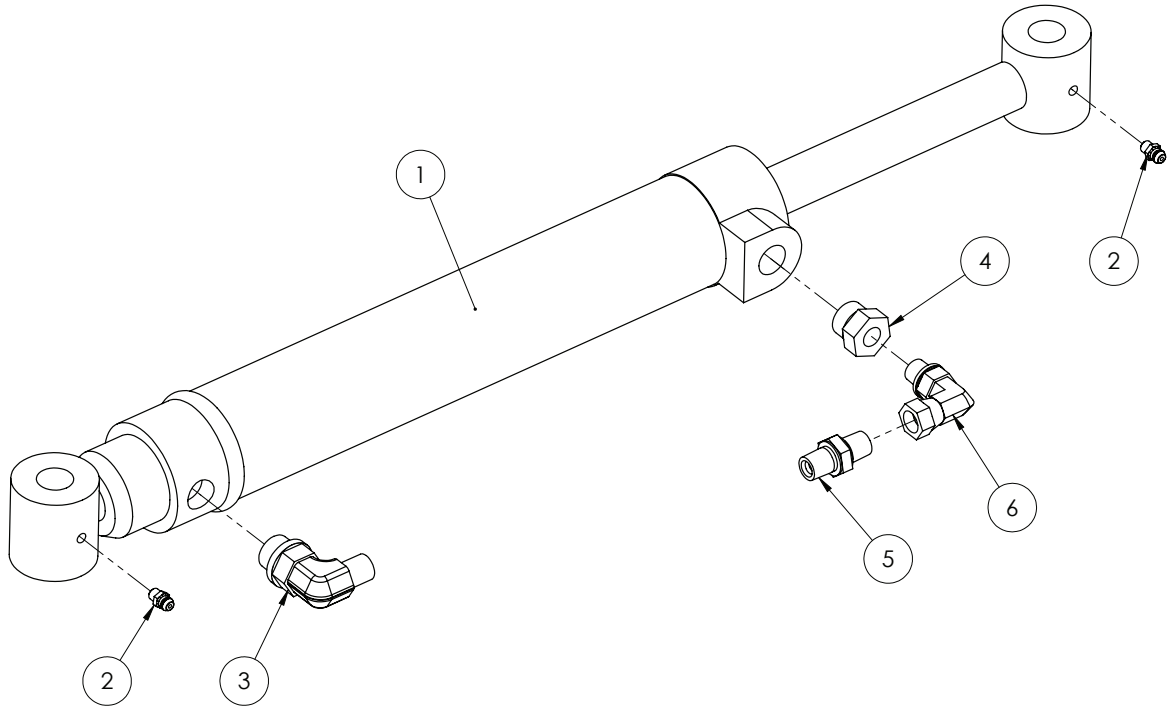

ITEM NO.	PART NUMBER	DESCRIPTION	QTY.
1	GA5021010	Hydraulic cylinder, 2" bore x 1" rod x 10" stroke	1
2	GA5012203	Grease nipple, Short, 1/4" UNF	2
3	GA3500348	Hydraulic adaptor, Elbow, 90 degree, 1/4" BSPT male x 3/4" UN male O-ring	1
4	GA3500340	Hydraulic adaptor, Reducing bush, 1/4" BSPT female x 3/4" UN male O-ring	1
5	GA4562025	Restrictor nipple 1/4" BSPT 0.5mm orifice	1
6	GA3500195	Hydraulic adaptor, Elbow, 90 degree, 1/4" BSPP male O-ring x 1/4" BSPP female swivel	1
-	GA5052755	Seal Kit, suit 2" bore x 1" rod	-

Hydraulic Cylinder - Raven XT - Left

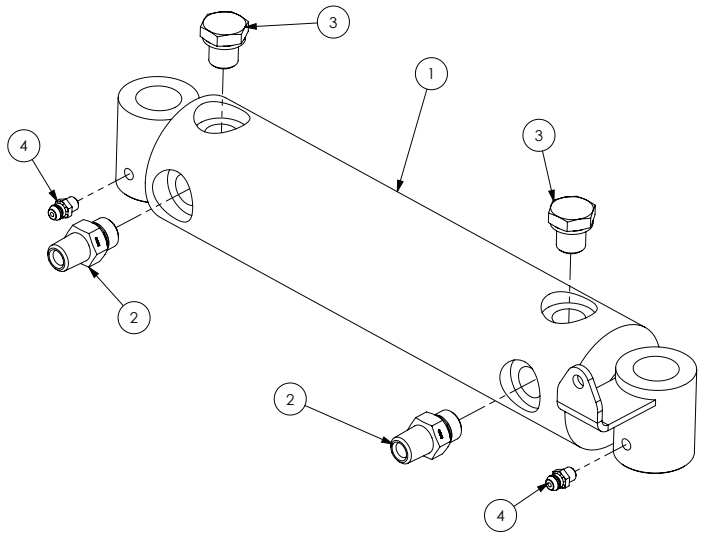

ITEM NO.	PART NUMBER	DESCRIPTION	QTY.
1	GA5070955	Cylinder, Hydraulic, Center Slant	1
2	GA3500358	Hydraulic adaptor, Nipple, 1/4” BSPT male x 9/16” UN male O-ring	2
3	GA3500299	Hydraulic adaptor, Plug, 1/4” BSPP male	2
4	GA5012203	Grease Nipple 1/4" UNF Short	2
-	GA5052745	Seal Kit, suit 2” bore x 1 1/4” rod	-

Hydraulic Cylinder - Raven XT - Right

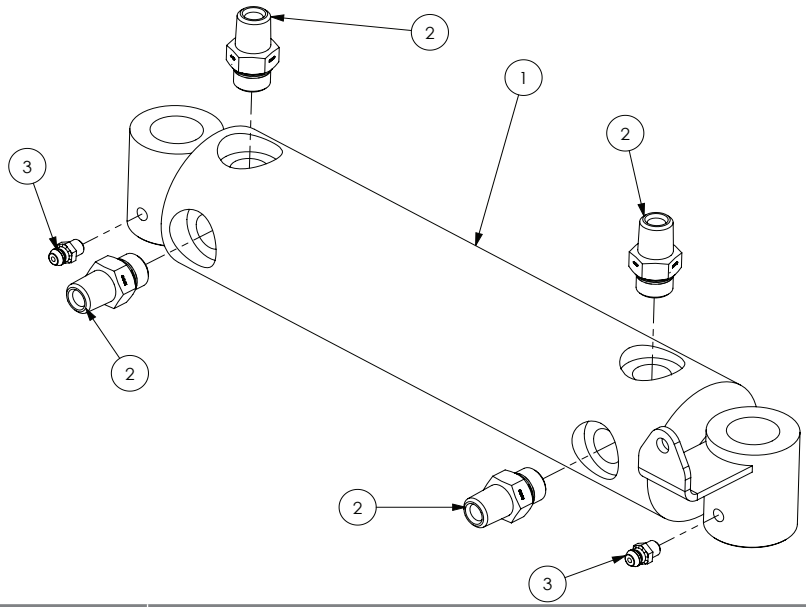

ITEM NO.	PART NUMBER	DESCRIPTION	QTY.
1	GA5070955	Cylinder, Hydraulic, Center Slant	1
2	GA3500358	Hydraulic adaptor, Nipple, 1/4” BSPT male x 9/16” UN male O-ring	4
3	GA5012203	Grease nipple, Short, 1/4” UNF	2

Hydraulic Cylinder - Yaw

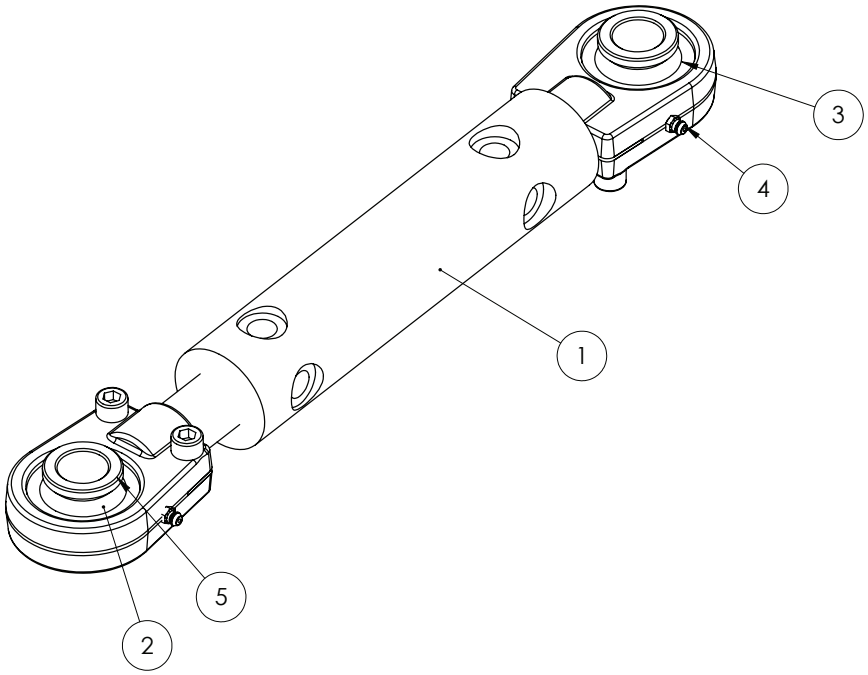

ITEM NO.	PART NUMBER	DESCRIPTION	QTY.
1	GA5060817	Hydraulic cylinder, 2" bore x 1 1/4" shaft x 117.5mm stroke, Spherical bearing ends	1
2	GA5067605	Bearing, suit screw on rose end, GEG 30 ES 2RS	2
3	GA5067610	Circlip, suit bearing screw on rose end, RTW 55	2
4	GA5012203	Grease nipple, Short, 1/4" UNF	2
5	GA5021925	Small bearing bush, Suit screw on rose end, Hypower, R-10424	4
-	GA5052745	Seal Kit, heavy duty, 2" bore x 1 1/4" shaft	-

Hydraulic Yaw Control Valve Assembly

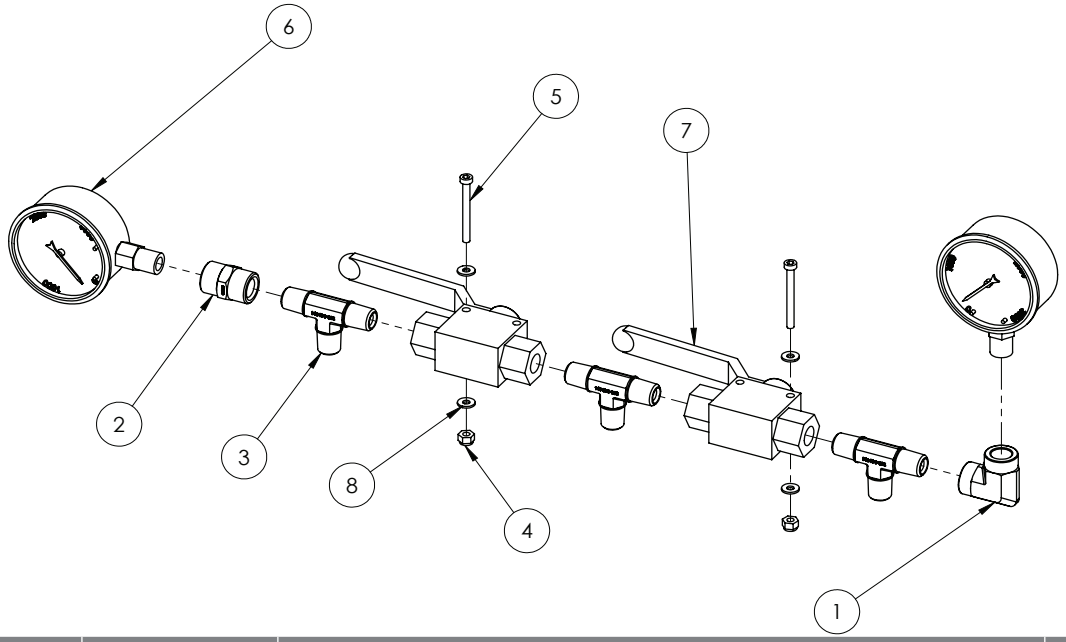

ITEM NO.	PART NUMBER	DESCRIPTION	QTY.
1	GA3500239	Elbow, 90, Hydraulic, 1/4 BSPT Female x 1/4 BSPT Female	1
2	GA3500211	Hydraulic adapter, Socket, 1/4" BSPT female x 1/4" BSPT female	2
3	GA3500269	Hydraulic adaptor, Tee, 1/4" BSP male x 1/4" BSP male x 1/4" BSP male	3
4	GA5049025	Nut M4 Nyloc SS	2
5	GA5049800	SHCS M4 x 40	2
6	GA5021455	Gauge, Pressure, Small face, 3500psi	2
7	GA5078083	Valve, Ball, Hydraulic, 1/4" BSP female thread inlet / outlet	2
8	GA5020510	Washer 4mm Flat HD SS	4

Hydraulic Yaw Charge Line

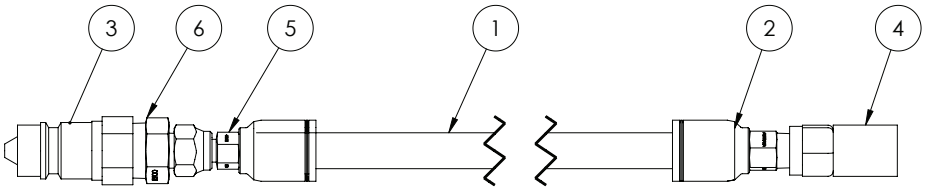

ITEM NO.	PART NUMBER	DESCRIPTION	QTY.
1	GA5049695	Hose, Hydraulic, 1/4", 2 wire, Black	1
2	GA3500394	Hydraulic crimp coupling, Straight, 1/4" hose x 1/4" BSPT male	1
3	GA5078000	Quick connect fitting, 1/2" male tip x 1/2" female thread	1
4	GA5077350	Adaptor, Direct Gauge, M16 x 2.0 female x 1/4" BSPP female	1
5	GA3500397	Hydraulic crimp coupling, Straight, 1/4" hose x 1/4" BSPP female swivel	1
6	GA3500221	Hydraulic adaptor, Nipple, 1/2" BSPT male x 1/4" BSPT male	1

Load Sense Turbo Valve

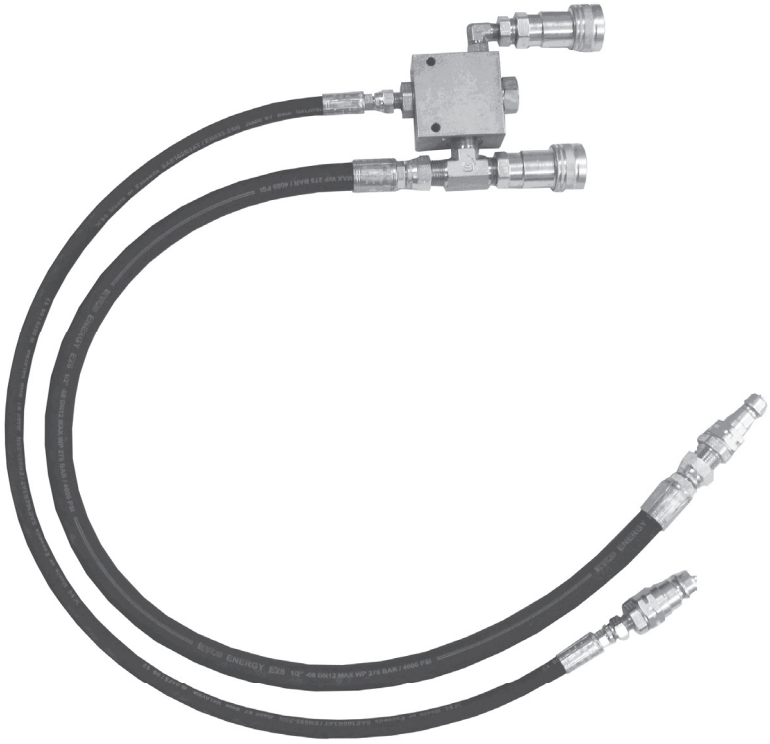

GA4902590 Complete Assembly

ITEM NO.	PART NUMBER	DESCRIPTION	QTY.
	GA5047677	Load sense turbo valve	1
	GA5078000	Quick connect fitting, 1/2” male tip x 1/2” female thread	2
	GA5078001	Quick release coupling, Ball check valve, Push/pull, Female body, 1/2” BSPP female	2
	GA3500308	Hydraulic adaptor, Nipple, 1/4" BSPT male x 1/2" BSPP male	2
	GA3500270	Hydraulic adaptor, Tee, 1/2” BSPT male x 1/2” BSPT male x 1/2” BSPT male	1
	GA3500399	Hydraulic crimp coupling, Straight, 1/2" hose x 1/2" BSPP female swivel	2
	GA3500397	Hydraulic crimp coupling, Straight, 1/4" hose x 1/4" BSPP female swivel	2
	GA3500310	Hydraulic adaptor, Nipple, 1/2” BSPT male x 1/2” BSPP male	1
	GA3500320	Hydraulic adaptor, Elbow, 90 degree, 1/4" BSPT male x 1/4" BSPP male O-ring	1
	GA3500203	Hydraulic adaptor, Reducing bush, 1/2” BSPT male x 1/4” BSPT female	1
	GA3500182	Hose, Hydraulic, 1/2"	1
	GA5049695	Hose, Hydraulic, 1/4”, 2 wire, Black	1

Quick Release Couplings

1/2" HYDRAULIC LINES		
ITEM	PART NO	DESCRIPTION
1	GA5078000	Quick connect fitting, 1/2" male tip x 1/2" female thread

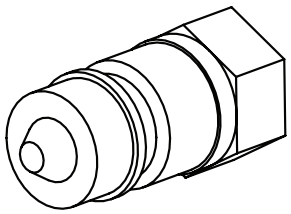

1/4" HYDRAULIC LINES		
ITEM	PART NO	DESCRIPTION
1	GA5078000	Quick connect fitting, 1/2" male tip x 1/2" female thread
2	GA3500221	Hydraulic adaptor, Nipple, 1/2" BSP x 1/4" BSP

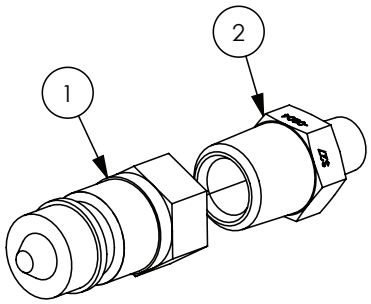

HYDRAULIC PUMP LINES		
ITEM	PART NO	DESCRIPTION
1	GA5078000	Quick connect fitting, 1/2" male tip x 1/2" female thread
2	GA5076891	Ring Retaining BSPP 1/2"
3	GA5078121	1/2" Hydraulic O-Ring
4	35B-08	1/2" BSPP Lock Nut

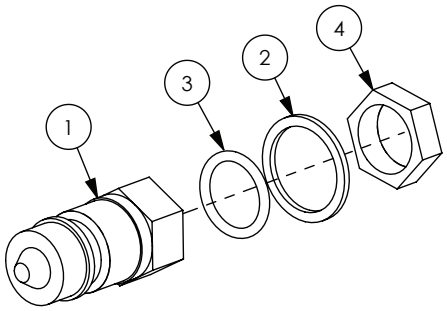

Note: Plastic Cover for when fittings are not in use: GA5052365.

Hydraulic O-rings & Retaining Washers

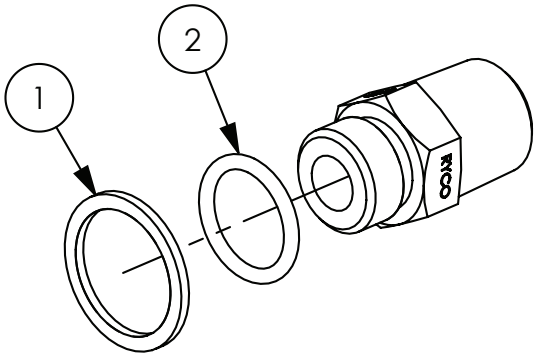

ITEM	PART NO	DESCRIPTION
1	GA5076889	Ring Retaining 1/4" BSPP
	GA5076890	Ring Retaining BSPP 3/8"
	GA5076891	Ring Retaining BSPP 1/2"
	GA5076892	Retaining Ring BSPP 3/4"
2	GA5078119	O-Ring BSPP 1/4"
	GA5078120	O-Ring 3/8" BSPP
	GA5078121	O-Ring BSPP 1/2"
	GA5078122	O-Ring BSPP 3/4"

Hose ID Tags

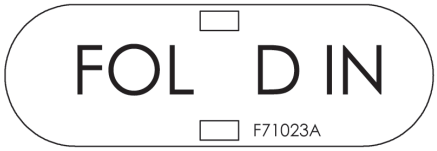

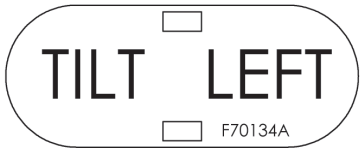

PART NUMBER	DESCRIPTION
F71023A	ID Tag for Fold In
F71024A	ID Tag for Fold Out
F71025A	ID Tag for Boom Raise/Lower
F70134A	ID Tag for Left Hand Tilt
F70135A	ID Tag for Right Hand Tilt
F71018A	ID Tag for Bi-Fold In
F71019A	ID Tag for Bi-Fold Out
F71020A	ID Tag for Pressure
F71021A	ID Tag for Tank
F71022A	ID Tag for Load Sense
F71026A	ID Tag for Brakes

Hydraulic Hoses

PART NUMBER	DESCRIPTION
GA5067925	1/4” Hydraulic Hose, Tractor to fold cylinders
GA5067930	1/2” Hydraulic Hose, Tractor to Boom Lower Solenoid
GA5067940	1/2” Hydraulic Hose, Accumulator manifold to lift cylinders
GA5067945	1/4” Hydraulic Hose, Tractor to tilt cylinders

Raw Hide & Spiral Guard

RAWHIDE

PART NUMBER	DESCRIPTION
GA5053630	Rawhide hose protection 23mm
GA5053710	Rawhide Hose protector 31mm
GA5053640	Rawhide hose protection 36mm
GA5053705	Rawhide Hose protector 73mm
GA5053715	Rawhide Hose protector 56mm
GA5066710	Rawhide hose protection 93mm
GA5054375	Rawhide, Nylon sleeve, 102mm, Hook & loop closure

SPIRAL GUARD

PART NUMBER	DESCRIPTION
GA5015669	Spiral guard, Black

Chapter 19

PLUMBING

Filter - Dual Pressure Assembly

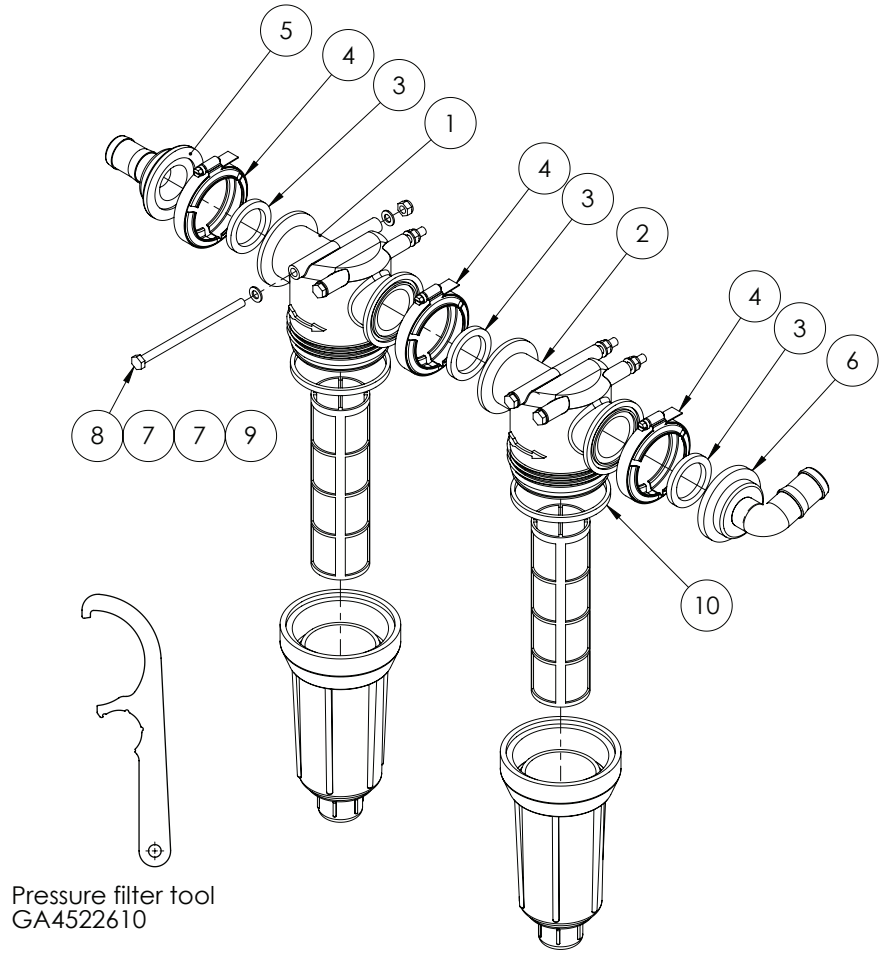

Pressure filter tool
GA4522610

ITEM NO.	PART NUMBER	DESCRIPTION	QTY.
1	GA5077285	Filter, 75 series flange inlet & outlet, 80 mesh	1
	GA5077394	Filter screen, 80 mesh, SS & polypropylene	
2	GA5077284	Filter, 75 series flange inlet & outlet, 100 mesh	1
	GA5077395	Filter screen, 100 mesh, SS & polypropylene	
3	GA5009335	Seal, 41.5 ID x 55 OD x 6.5mm thick, EPDM, suit 1 1/2" flange	3
4	FC200	Clamp, Worm screw, Use with 2" standard flange port, Banjo	3
5	GA5077830	Hose barb, Flanged, Straight, 2" flange x 1 1/4" barb, Banjo	2
6	GA5077831	Hose barb, Flanged, Elbow, 2" flange x 1 1/4" barb, Banjo	1
7	GA5003643	Washer 8mm Flat SS Heavy Duty	8
8	GA5011503	Bolt M8 x 140 ZP GR8.8	4
9	GA5004917	Nut M8 Nyloc ZP	4
10	GA5077541	Seal, 98 OD x 91 ID x 7mm thick	2

Filter - Pressure - Body Assembly

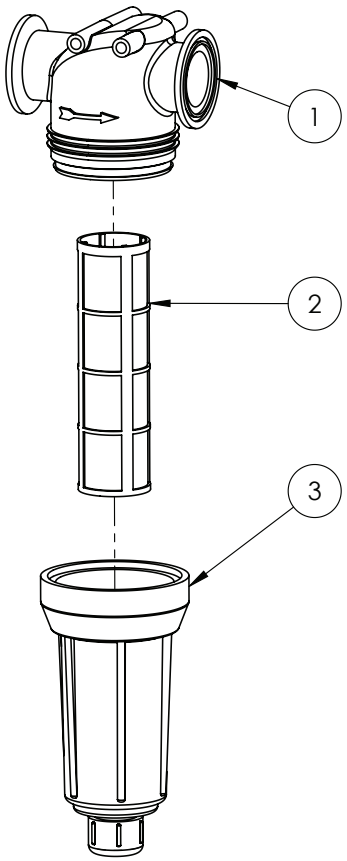

ITEM NO.	PART NUMBER	DESCRIPTION	QTY.
1	GA5077285	Filter, 75 series flange inlet & outlet, 80 mesh	1
	GA5077284	Filter, 75 series flange inlet & outlet, 100 mesh	1
2	GA5077394	Filter screen, 80 mesh, SS & polypropylene	1
	GA5077395	Filter screen, 100 mesh, SS & polypropylene	1
3	GA5077539	Filter bowl, AA126, Suits 1 1/2 + 1 1/4, Grey, Polypropylene	2

Filter - 2” Fill

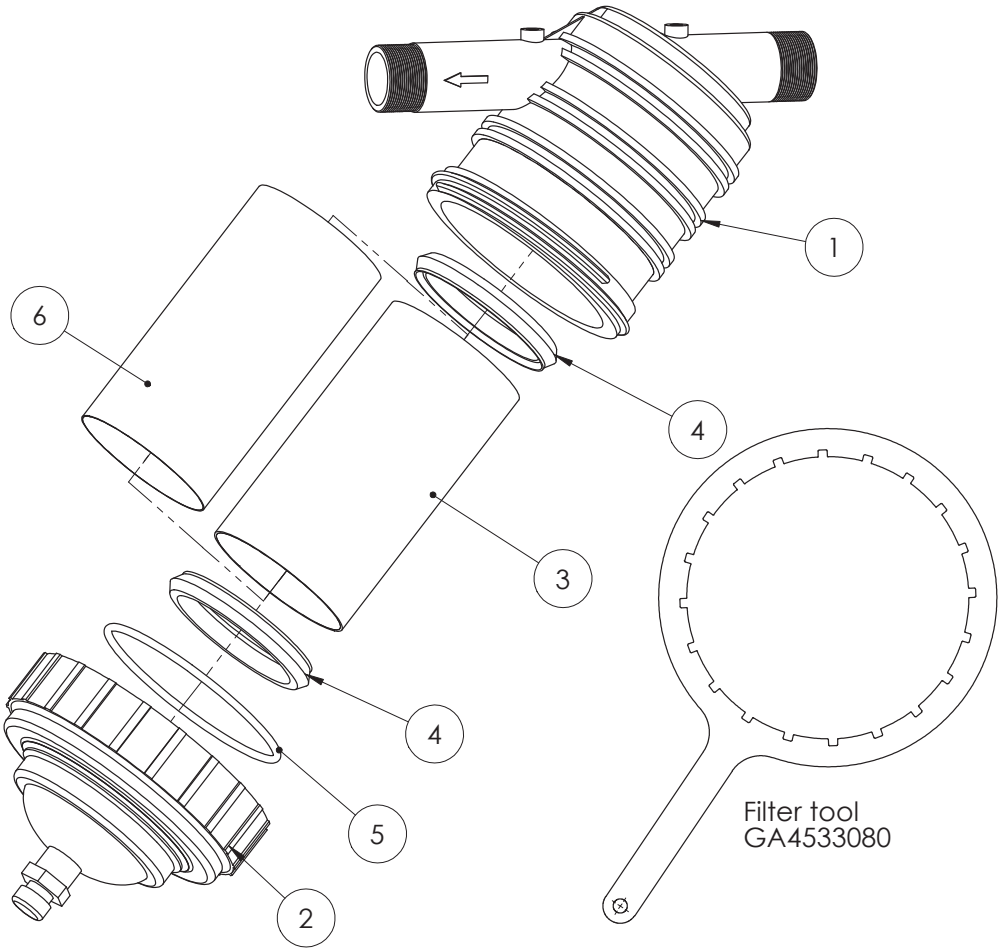

ITEM NO.	PART NUMBER	DESCRIPTION	QTY.
-	GA5001333	Fill Filter, 2”, 7 mesh Stainless steel screen with 50 mesh screen sock	-
1	GA5077347	Body, suit 2” Geoline	1
2	GA5077349	Top cover & nut	1
3	GA5076845	Filter screen, 50 mesh, Blue, SS & polypropylene	1
4	GA5001329	Seal, Viton, Suit Geoline 2” fill filter	2
5	GA5012545	O-ring, Suit Geoline 2 fill filter GA5001333	1
6	GA5000421	Filter screen, 50 mesh, White, Sock type, Suit SS filter screen on 2" fill filter	1

Filter - In Line Boom

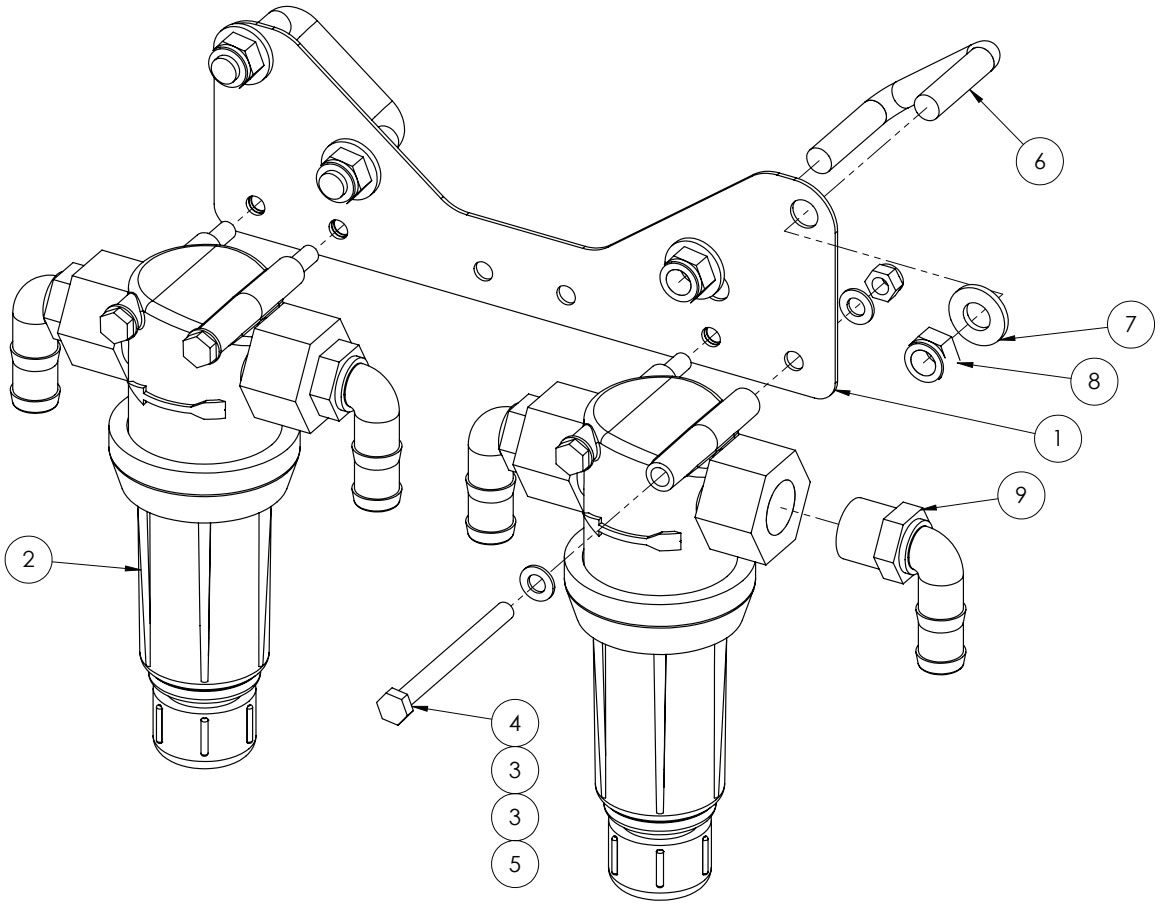

ITEM NO.	PART NUMBER	DESCRIPTION	QTY.
1	GA4505205	Boom line filter mount plate bolt on	1
2	GA5077270	Filter, 3/4" female thread inlet/outlet, 200 mesh screen	2
3	GA5048115	Nut M6 Nyloc ZP	8
4	GA5011495	Bolt M8 x 90 ZP GR8.8	4
5	GA5004917	Nut M8 Nyloc ZP	4
6	GA5011243	M12 x 50mm x 50mm Square Top U Bolts	2
7	GA5000577	Washer 12mm Flat SS HD	4
8	GA5012461	Nut M12 Nyloc ZP	4
9	GA5077717	Hose barb, Elbow, 90 degree, 3/4" male thread x 3/4" hose, Banjo	4

Filter - 2” Suction

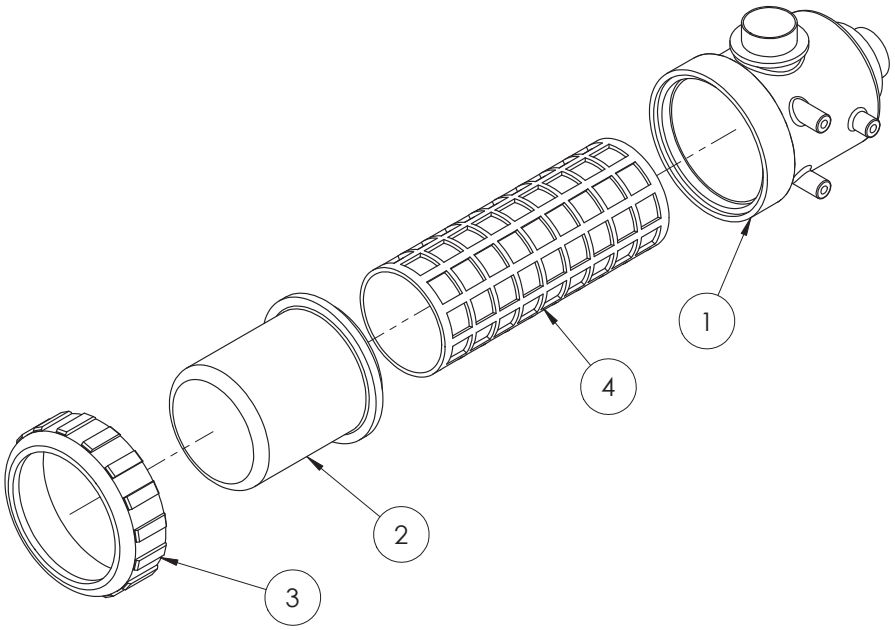

ITEM NO.	PART NUMBER	DESCRIPTION	QTY.
-	GA5076799	Filter, Suction, 317, 2” BSP male inlet and outlet, 32 mesh screen	-
-	GA5076769	O Ring 126.4 x 7 (BS429), suit 317 filter	2
1	316070.01	317 filter body	1
2	317000.02	317 filter bowl	1
3	316000.04	317 filter nut	1
4	GA5076797	32 Mesh Screen - Red (standard fitment)	-
	GA5076795	50 Mesh Screen - Blue	-
	GA5076798	80 mesh Screen - Yellow	-

Fill Pump - 3”

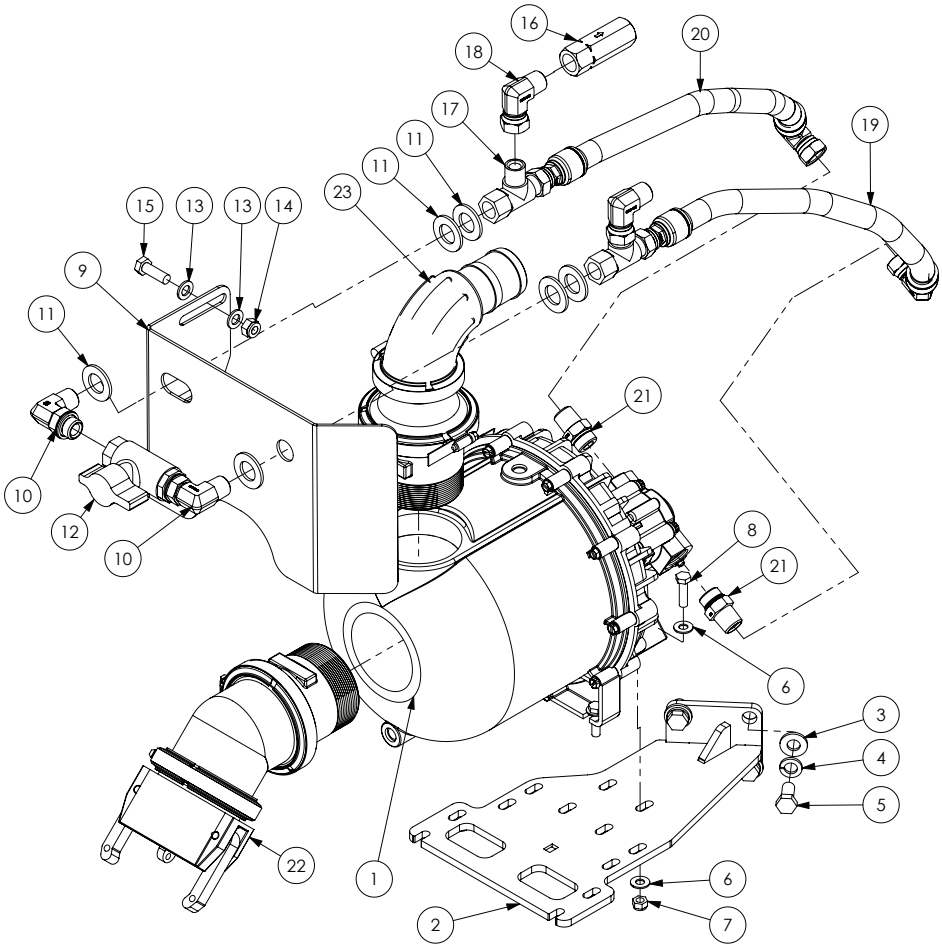

ITEM NO.	PART NUMBER	DESCRIPTION	QTY.
-	GA5072075	Seal kit, Pump, Poly 3” BSP, Complete rebuild	-
1	GA5072085	Pump, Poly 3” BSP, Transfer, Viton, Hydraulic drive	1
2	GA4658170	Mounting bracket, Hydraulic fill pump, Suit Prairie Evo	1
3	GA5000577	Washer 12mm Flat SS HD	4
4	GA5000575	Washer 12mm Spring SS	4
5	GA5011229	Bolt M12 x 25 ZP GR8.8	4
6	GA5003643	Washer 8mm Flat SS HD	8
7	GA5004917	Nut M8 Nyloc ZP	4
8	GA5011475	Bolt M8 x 30 ZP GR8.8	4
9	GA4523865	Mount, Tap, Fill pump	1
10	GA3500323	Hydraulic adaptor, Elbow, 90 degree, 1/2" BSPT male x 1/2" BSPP male O-ring	2
11	GA5001741	Washer 20mm Flat SS Heavy Duty	6
12	GA5000835	Valve, Ball, Hydraulic, 1/2” female thread inlet / outlet	1
13	GA5000117	Washer 10mm Flat SS HD	4
14	GA5000141	Nut M10 Nyloc ZP	2
15	GA5065455	Bolt M10 x 30 ZP GR8.8	2

Continued over page

ITEM NO.	PART NUMBER	DESCRIPTION	QTY.
16	GA5007060	Valve, Check, Hydraulic, 1/2” BSPP female inlet & outlet, 45L/min flow, Maximum 320bar	1
17	GA3500200	Hydraulic adaptor, Tee, 1/2” BSPT male x 1/2” BSPT male x 1/2” BSPP female swivel	2
18	GA3500333	Hydraulic adaptor, Elbow, 90 degree, 1/2” BSPT male x 1/2” BSPP female swivel	2
19	-	Left Hydraulic Hose Assembly	1
20	-	Right Hydraulic Hose Assembly	1
21	GA3500364	Hydraulic adaptor, Nipple, 1/2” BSPT male x 7/8” UN male O-ring	2
22	*	Fill Pump Inlet Assembly	1
23	*	Fill Pump Outlet Assembly	1

* Sub-assembly on following pages

Fill Pump - 3” Inlet Assembly

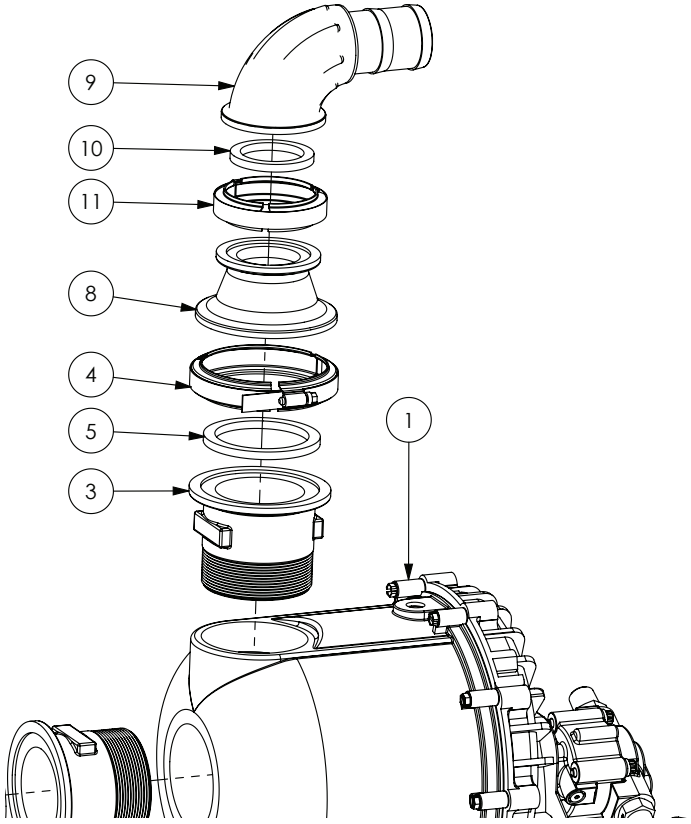

ITEM NO.	PART NUMBER	DESCRIPTION	QTY.
1	GA5072085	Pump, Poly 3” BSP, Transfer, Viton, Hydraulic drive	1
3	GA5077876	Plumbing Fitting, 3” Flange to 3” BSP Thread, Banjo	1
4	FC300	Hose clamp, Worm screw, 3”	1
5	GA5076723	Seal, EPDM, Suit 3” flange fitting, Banjo	1
8	GA5077872	Reducing flange, 2” flange x 3” flange, Banjo	1
9	GA2000071	Plumbing Fitting, Sweep Elbow, 90 Degree, 2” Flange to 2” Barb	1
10	GA5076615	Seal, EPDM, Suit 2” flange fitting, Banjo	1
11	FC220	2” Full Port Worm Screw Clamp	1

Fill Pump - 3” Outlet Assembly

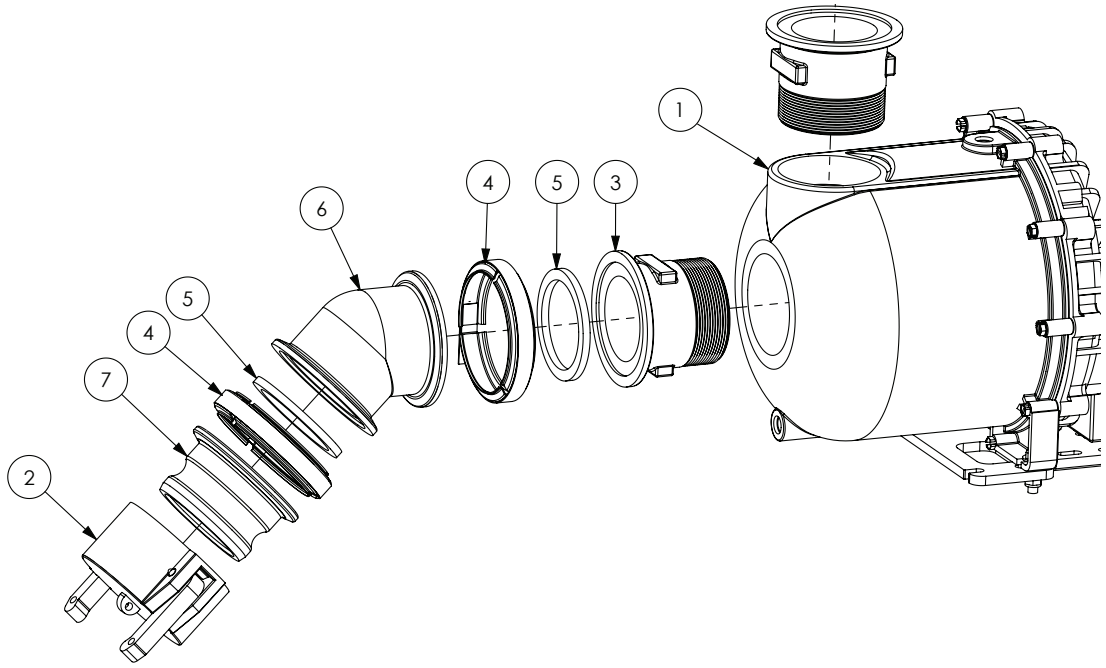

ITEM NO.	PART NUMBER	DESCRIPTION	QTY.
1	GA5072085	Pump, Poly 3” BSP, Transfer, Viton, Hydraulic drive	1
2	GA5076719	Cam lever, Female cap, 3”, Banjo	1
3	GA5077876	Plumbing Fitting, 3” Flange to 3” BSP Thread, Banjo	1
4	FC300	Hose clamp, Worm screw, 3”	2
5	GA5076723	Seal, EPDM, Suit 3” flange fitting, Banjo	2
6	GA2000070	Plumbing Fitting, Elbow, 45 Degree, 3” Flange both ends, Banjo	1
7	GA5077873	3” Male Adapter x 3” Manifold	1

Fill Point - 2”

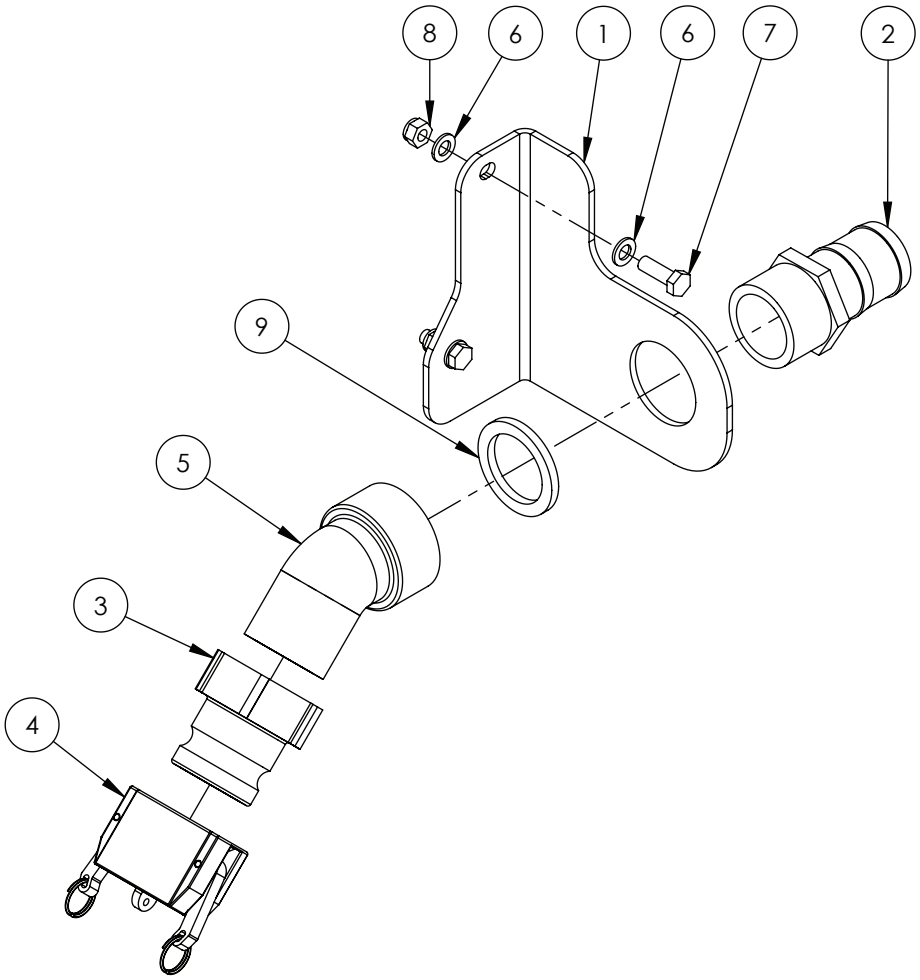

ITEM NO.	PART NUMBER	DESCRIPTION	QTY.
1	GA4523870	Fill Pump Mount Plate Suit 2"	1
2	GA5077737	Hose barb, Straight, 2” male thread x 2” hose	1
3	GA5076606	Cam lever, 2” male coupler x 2” female thread	1
4	GA5076609	Cam lever, 2” female cap	1
5	GA5078141	Street elbow, 45 degree, 2” male thread x 2” female thread	1
6	GA5000117	Washer 10mm Flat SS HD	4
7	GA5065455	Bolt M10 x 30 ZP GR8.8	2
8	GA5000141	Nut M10 Nyloc ZP	2
9	GA5076615	Seal, EPDM, Suit 2" flange fitting	1

Fill - Direct Tank - 2”

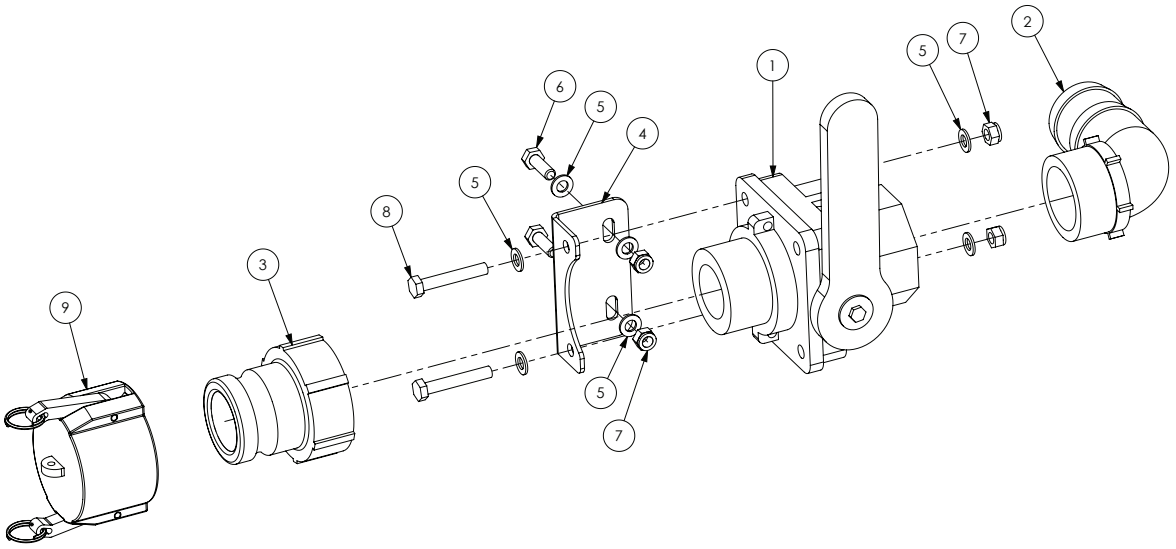

ITEM NO.	PART NUMBER	DESCRIPTION	QTY.
1	GA5078205	Ball Valve, 2 Way, 2” Male NPT x 2” Female NPT, Full Port	1
2	GA5077740	Hose barb, Elbow, 90 degree, 2” male thread x 2” hose	1
3	GA5076606	Cam lever, 2” male coupler x 2” female thread	1
4	GA4507125	Mount Plate Bracket, suit Banjo Valve 2"	1
5	GA5003643	Washer 8mm Flat SS HD	8
6	GA5004713	Bolt M8 x 25 SS	2
7	GA5052590	Nut M8 Nyloc SS	4
8	GA5004727	Bolt M8 x 50 ZP GR8.8	2
9	GA5076609	Cam lever, 2” female cap	1

Fill Flow Meter - Teejet

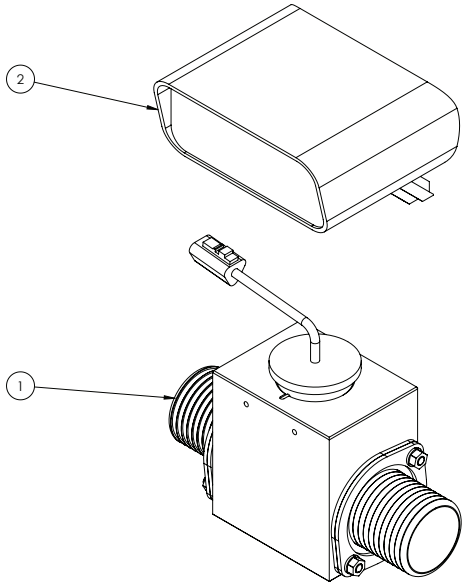

ITEM NO.	PART NUMBER	DESCRIPTION	QTY.
1	GA5077191	Kit, Flowmeter 40D2 Hose Barbs	1
2	75-30018	Console, Fill flow, Metric	1

Fill Flow Meter - Teejet & Shut Off Valve

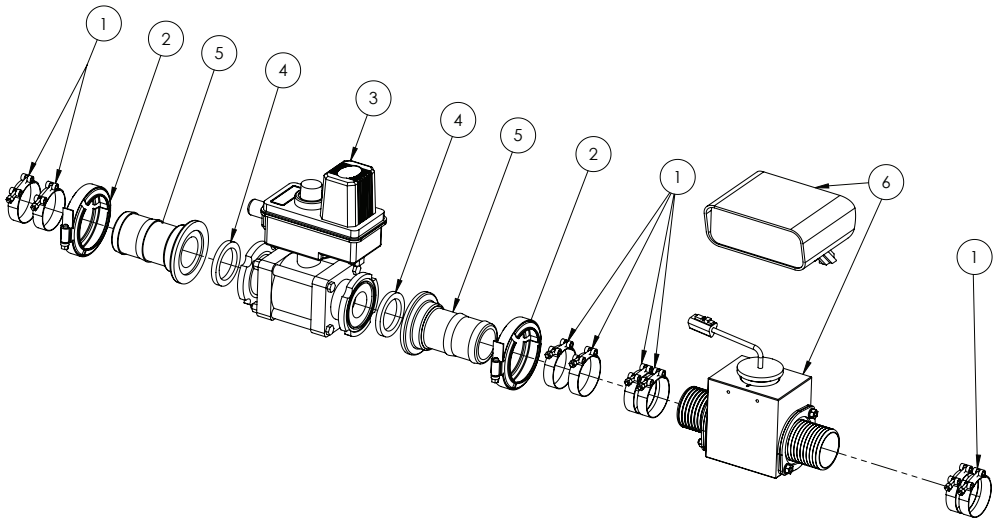

ITEM NO.	PART NUMBER	DESCRIPTION	QTY.
1	GA5010191	Hose Clamp 2” T-bolt SS	8
2	FC200	Clamp, Worm screw, Use with 2” standard flange port	2
3	GA5076868	Ball Valve Electric 2 way 2” flange	1
4	GA5009335	Seal, 41.5 ID x 55 OD x 6.5 mm thick, EPDM, suit 1 1/2” flange	2
5	GA5077837	Hose barb, Straight, 2” flange x 2” hose	2
6	GA5077193	Kit, Fill Flow, 40D F.m.metric, 70 Series Monitor	1

Flow Meter - Spray - Assembly

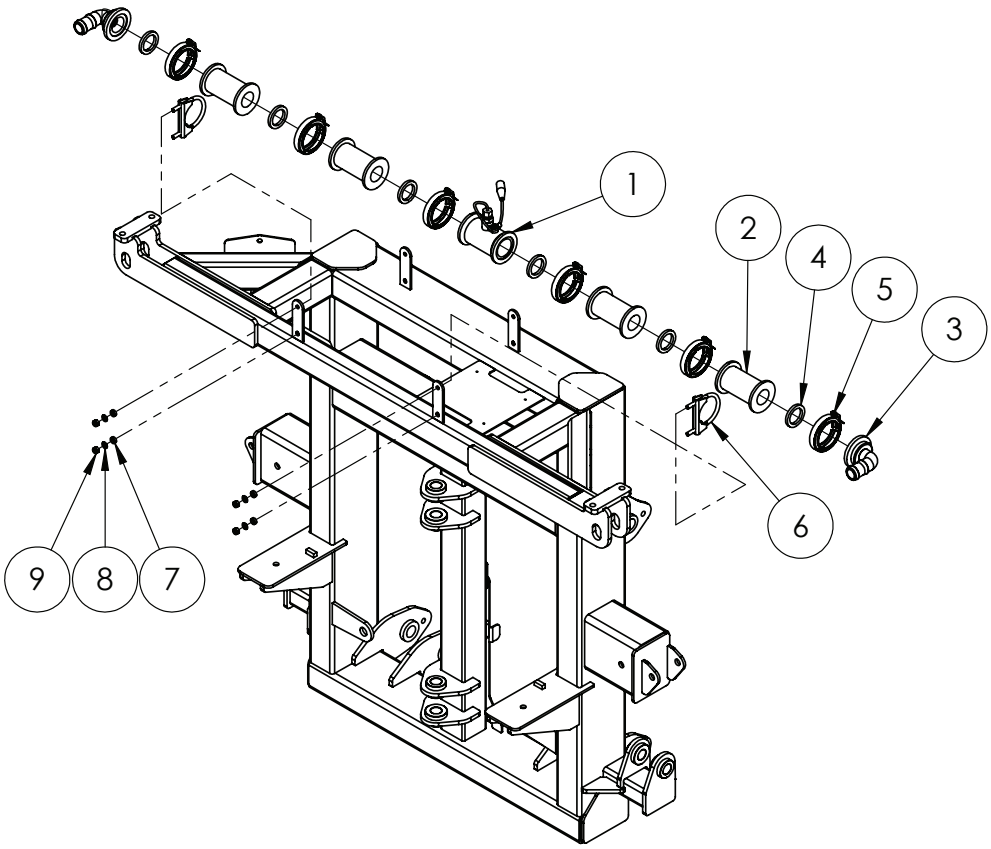

ITEM NO.	PART NUMBER	DESCRIPTION	QTY.
-	106-0159-514	Body, Molded Flowmeter	-
-	GA5075868	Sensor, External Flow Meter, Raven	-
1	GA5075873	Flowmeter	1
2	GA5077840	Plumbing coupling, Straight, 2” flange x 2” flange x 4 1/2” long	4
3	GA5077831	Hose barb, Elbow, 90 degree, 2” flange x 1 1/4” hose, Banjo	2
4	GA5009335	Seal, 41.5 ID x 55 OD x 6.5mm thick, EPDM	6
5	FC200	Clamp, Worm screw, Use with 2” standard flange port, Banjo	6
6	GA5006689	Clamp Exhaust 2 5/8” (C12)	2
7	GA4552080	Crush tube, 10.2 ID x 15 OD x 5mm long	4
8	GA5003643	Washer 8mm Flat SS HD	4
9	GA5052590	Nut M8 Nyloc SS	4

Flow Control Assembly

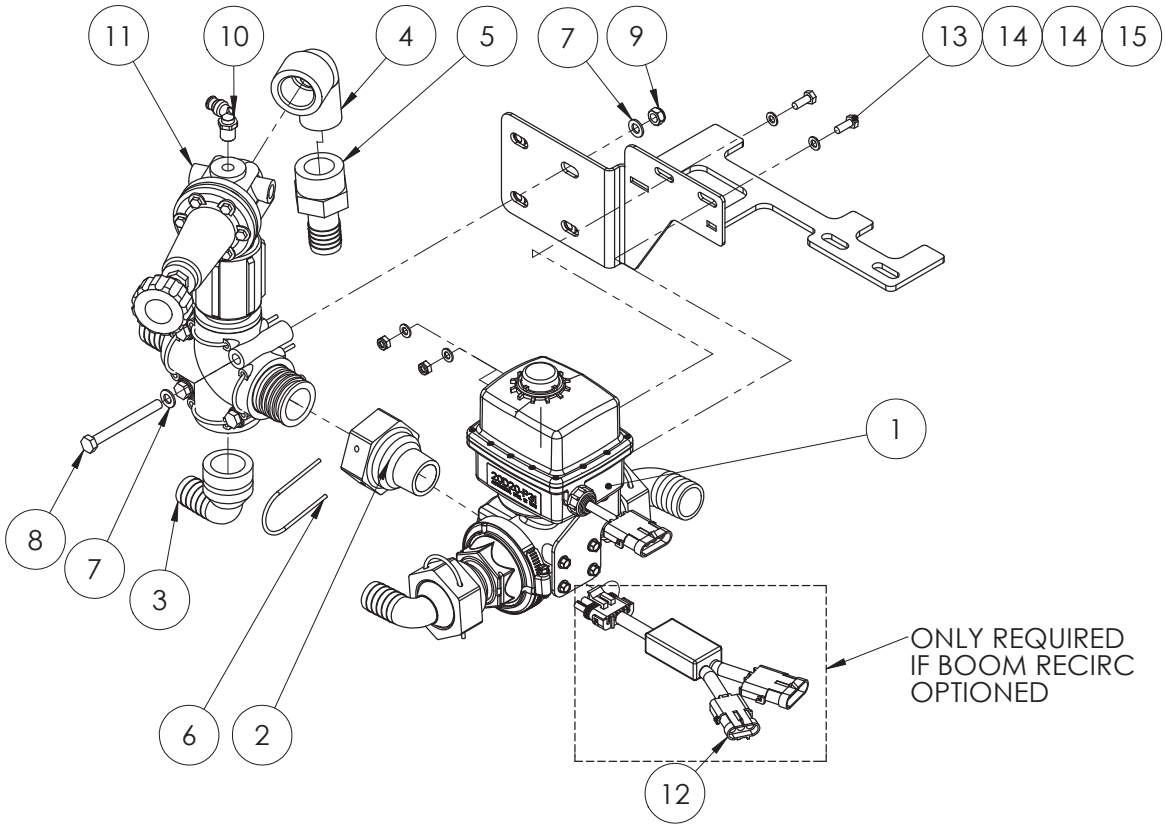

ITEM NO.	PART NUMBER	DESCRIPTION	QTY.
1	*	Flow Control - Fast Close Valve Assembly	1
2	GA4582385	Coupling, AS40 female x 1" NPT male thread	1
3	GA5065615	Hose barb, Elbow 90 degree, AS40 x 25mm	1
4	GA5078137	Street elbow, 90 degree, 1 male x 1 female	1
5	GA5077718	Hose barb, Straight, 1" male thread x 1" hose	1
6	GA5065690	Safety pin, Suit AS40 plumbing fittings	1
7	GA5003643	Washer 8mm Flat SS HD	8
8	GA5004749	Bolt M8 x 80 GR8.8 ZP	4
9	GA5004917	Nut M8 Nyloc ZP	4
10	GA5016233	Pneumatic fitting, Elbow, 90 degree, 1/4" BSP male x 6mm push type, Metal	1
11	*	Flow Control - Safety Valve	1
12	GA5060059	Loom Boom Recirc Bypass Module	1
13	GA5011395	Bolt M6 x 16 SS A2-70	2
14	GA5004437	Washer 6mm Flat SS	4
15	GA5048115	Nut M6 Nyloc ZP	2

* Sub-assembly on following pages

Flow Control - Fast Close Valve Assembly

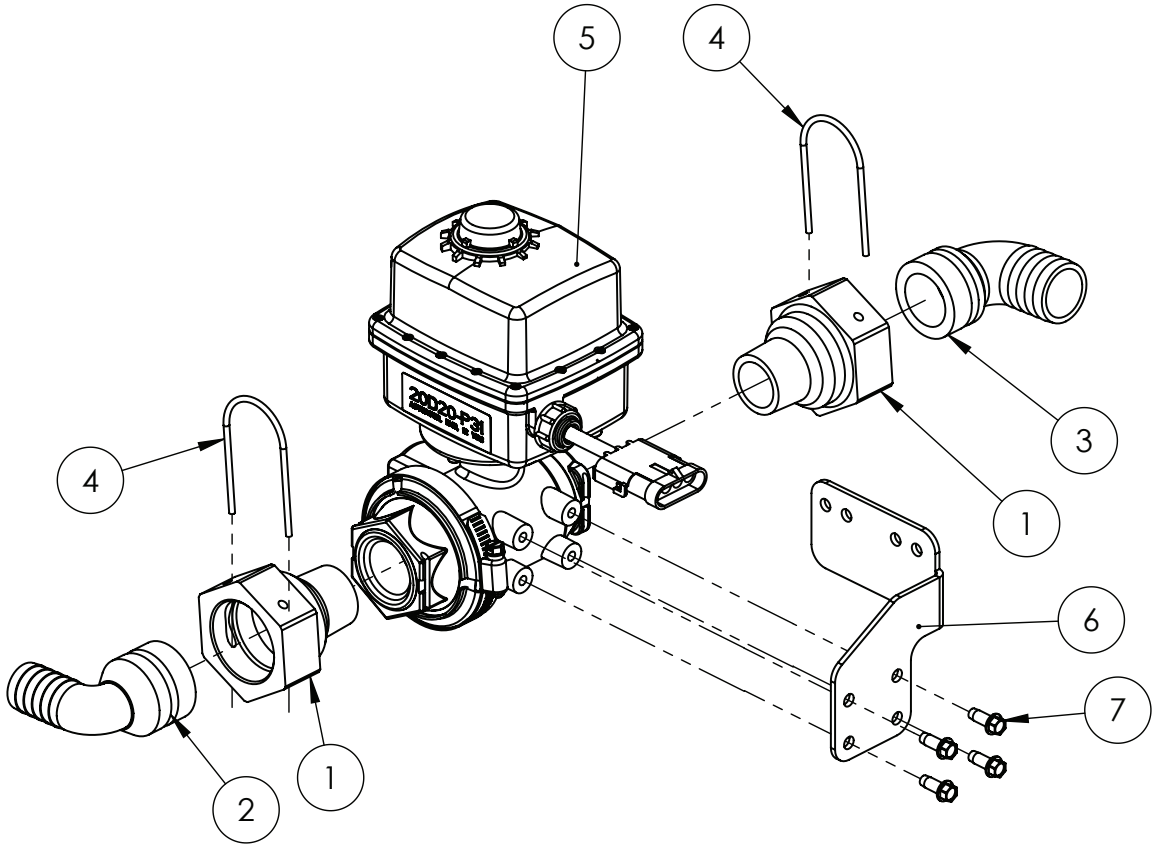

ITEM NO.	PART NUMBER	DESCRIPTION	QTY.
1	GA4582385	Coupling Altek AS40 to 1" NPT male thread	2
2	GA5065615	Hose barb, Elbow 90 degree, AS40 x 25mm, Altek	1
3	GA5065620	Plug in hose tail AS40/33/90 degree	1
4	GA5065690	Safety pin AS40	2
5	GA2000065	Regulator valve, 1" NPT, full port, 3 way, 0.8 sec 12v, KZ valve	1
6	GA4524925	Bracket, KZ valve to Raven FCV mount	1
7	GA0500022	Set Screw Self Tapping Trilobe M6 x 16 ZP	4

Flow Control - Safety Valve Assembly

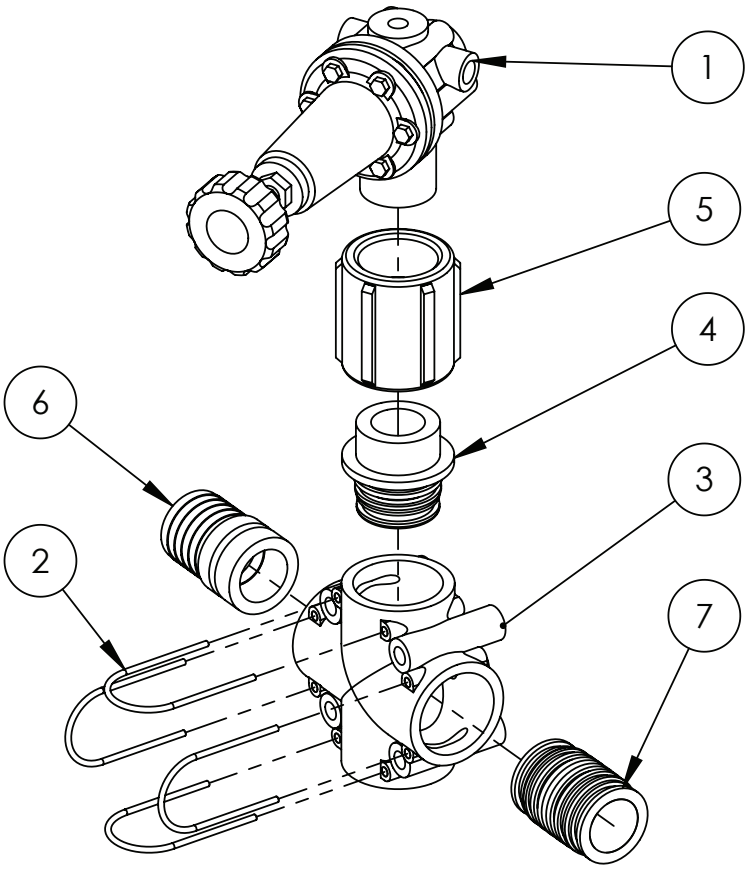

ITEM NO.	PART NUMBER	DESCRIPTION	QTY.
1	GA5075640	Valve, Pressure relief, 15 bar, 1" male thread inlet x 1 1/4" male thread outlet, Red, Polmac	1
2	GA5065690	Safety pin, Suit AS40 plumbing fittings, Altek	4
3	GA5065565	Plumbing coupling, Cross, AS40 female inlets / outlets, Altek	1
4	GA5065595	Plug in hose tail AS40/G1 1/4" male	1
5	GA5077639	Coupling, socket, 1 1/4" female thread, Banjo	1
6	GA5065590	Hose barb, Straight, AS40 x 39mm hose, Altek	1
7	GA5065735	Plumbing adaptor, AS40 male x AS40 male, Altek	1

Flow Distributer - Raven

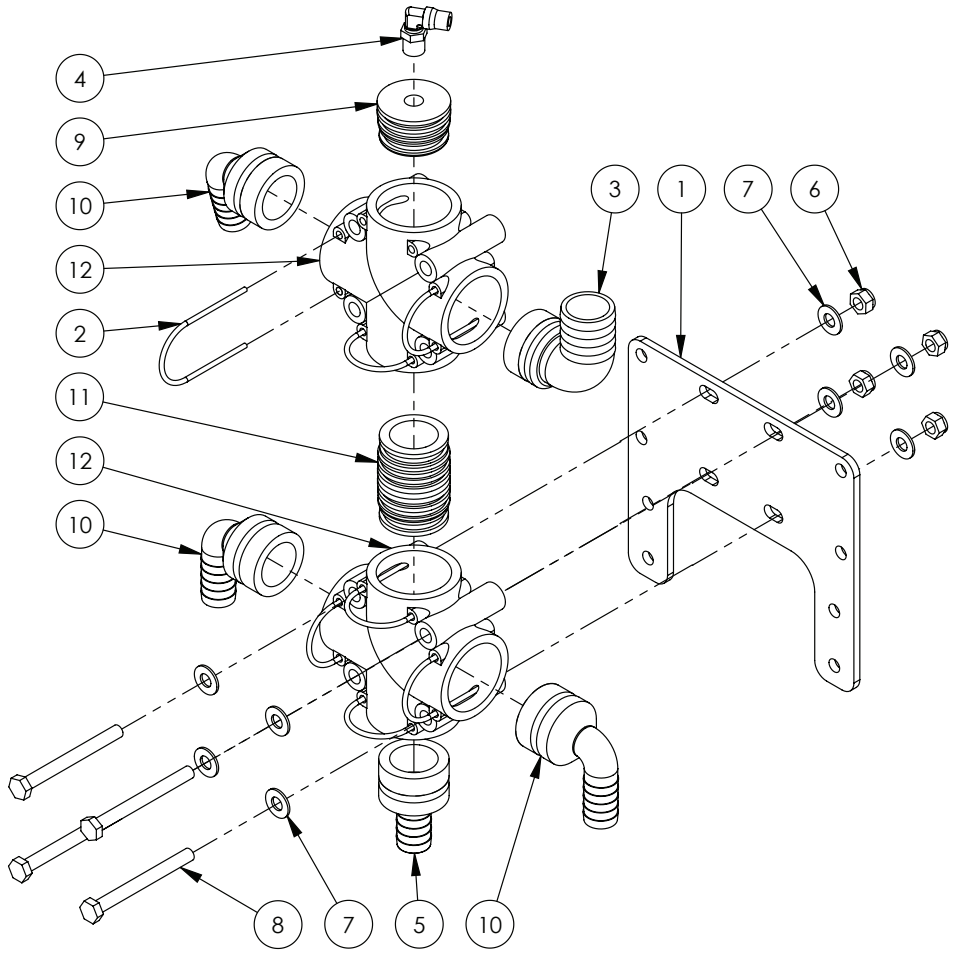

ITEM NO.	PART NUMBER	DESCRIPTION	QTY.
1	GA4522640	Mount to suit Manifold	1
2	GA5065690	Safety pin, Suit AS40 plumbing fittings, Altek	7
3	GA5065620	Hose barb, Elbow, 90 degree, AS40 x 33mm hose barb, Altek	1
4	GA5016233	Pneumatic fitting, Elbow, 90 degree, 1/4" BSP male x 6mm push type, Metal	1
5	GA5065575	Hose barb, Straight, AS40 male x 20mm hose, Altek	1
6	GA5004917	Nut M8 Nyloc ZP	4
7	GA5003643	Washer 8mm Flat SS HD	8
8	GA5004749	Bolt M8 x 80 ZP GR8.8	4
9	GA4582160	Plumbing adaptor, Plug, AS40 male x G1/4" Female Thread, Altek	1
10	GA5065610	Hose barb, Elbow, 90 degree, AS40 x 20mm hose, Altek	3
11	GA5065735	Plumbing adaptor, AS40 male x AS40 male, Altek	1
12	GA5065565	Plumbing coupling, Cross, AS40 female inlets / outlets, Altek	2

Flow Distributer - ISO

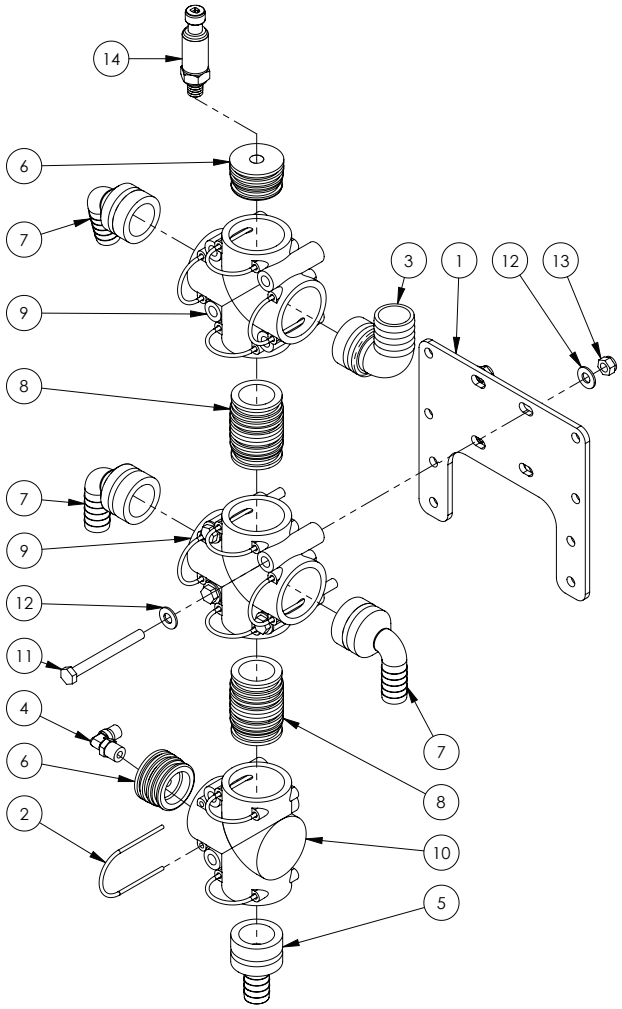

ITEM NO.	PART NUMBER	DESCRIPTION	QTY.
1	GA4522640	Mount to suit Altek Rear Camera Manifold	1
2	GA5065690	Safety pin, Suit AS40 plumbing fittings, Altek	11
3	GA5065620	Hose barb, Elbow, 90 degree, AS40 x 33mm hose barb	1
4	GA5016233	Pneumatic fitting, Elbow, 90 degree, 1/4" BSP male x 6mm push type, Metal	1
5	GA5065575	Hose barb, Straight, AS40 male x 20mm hose, Altek	1
6	GA4582160	Plumbing adaptor, Plug, AS40 male x G1/4" Female Thread, Altek	2
7	GA5065610	Hose barb, Elbow, 90 degree, AS40 x 20mm hose, Altek	3
8	GA5065735	Plumbing adaptor, AS40 male x AS40 male, Altek	2
9	GA5065565	Plumbing coupling, Cross, AS40 female inlets / outlets, Altek	2
10	GA5065560	Tee, AS40 female, M8 inserts, Altek	1
11	GA5004749	Bolt M8 x 80 ZP GR8.8	4
12	GA5003643	Washer 8mm Flat SS HD	8
13	GA5004917	Nut M8 Nyloc ZP	4
14	GA5076953	Pressure Transducer, 0-250PSI, Sealed, Raven	1

RapidFire - RapidFlow Return Valve

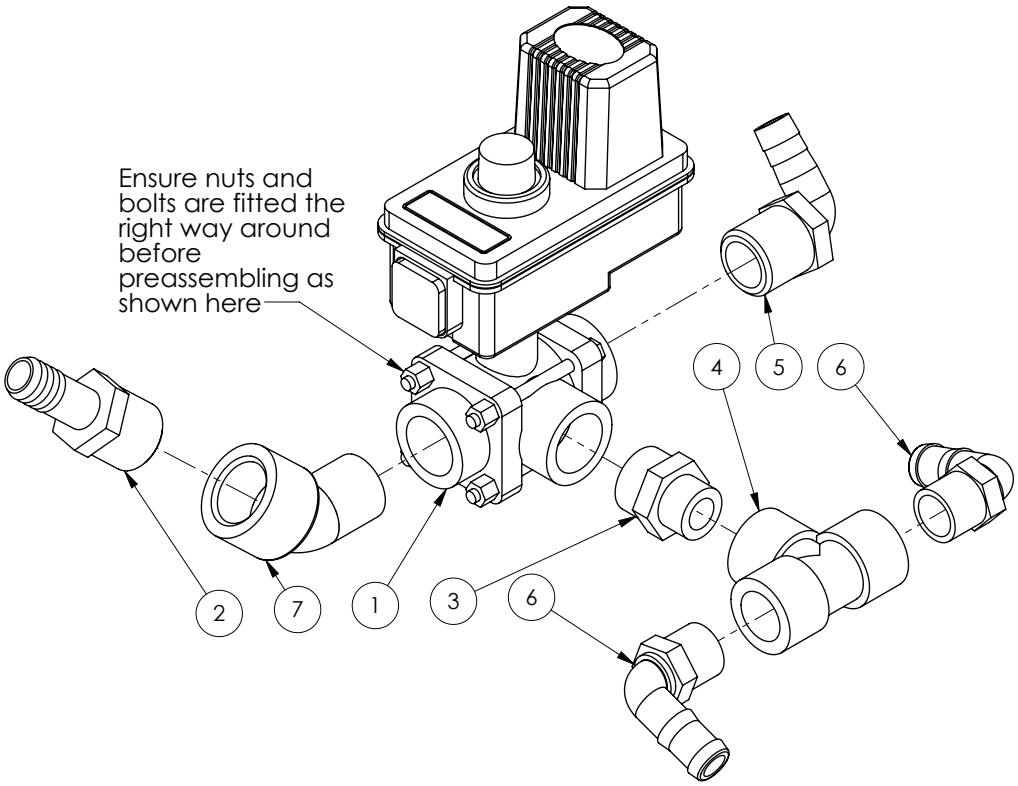

ITEM NO.	PART NUMBER	DESCRIPTION	QTY.
1	GA5077319	SHUTOFF/BYPASS 1" BSPT 3 way (Yellow indicator)	1
2	GA5077721	Hose barb, Straight, 1" male thread x 3/4" hose	1
3	GA5078089	Reducing Nipple, 1" thread x 3/4" thread	1
4	GA5078150	Tee, Threaded, 3/4" female	1
5	GA5077719	Hose barb, Elbow, 90 degree, 1" male thread x 3/4" hose	1
6	GA5077717	Hose barb, Elbow, 90 degree, 3/4" male thread x 3/4" hose	2
7	GA5078136	Street elbow, 45 degree, 1" male thread x 1" female thread	1

Pump - Chemical Transfer

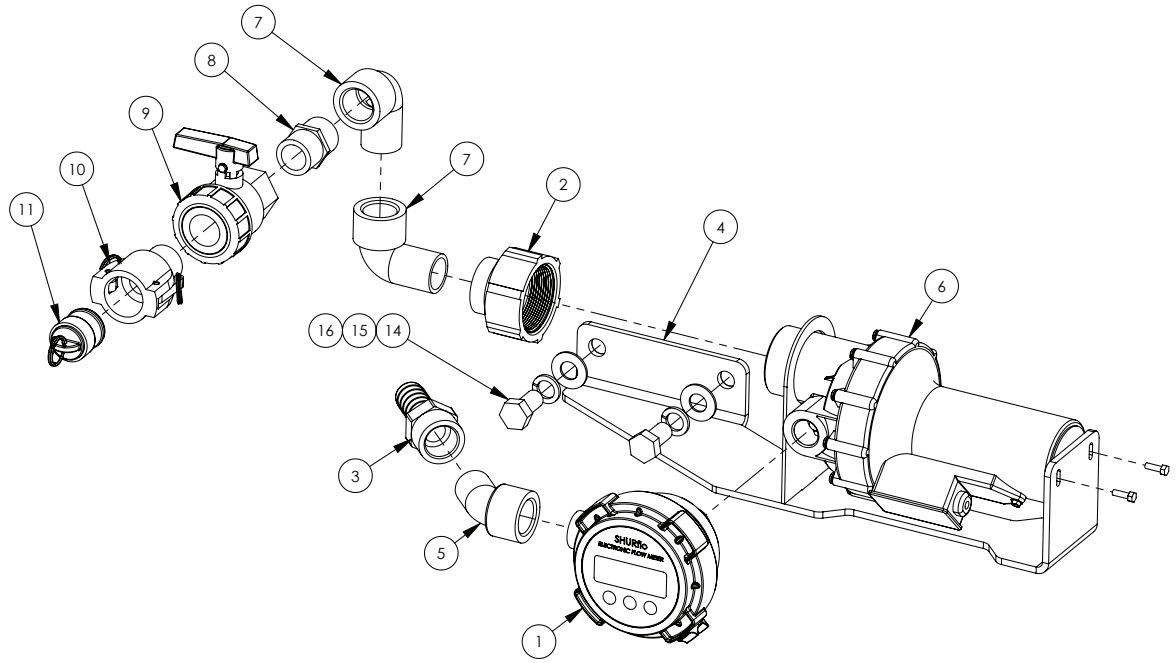

ITEM NO.	PART NUMBER	DESCRIPTION	QTY.
1	GA2000031	Flow meter, Chemical transfer, 90 degree, Shurflo	1
2	GA2000032	Reducing coupling, 2" female NPT to 1" female NPT, Shurflo	1
3	GA5077747	Hose barb, Straight, 1” female thread x 1” hose, Banjo	1
4	GA4600250	Bracket, Shurflo Transfer Pump, Special	1
5	GA5078136	Street elbow, 45 degree, 1” male thread x 1” female thread, Banjo	1
6	GA2000030	Pump, Diaphragm, Chemical transfer 12v, Viton SHURflo	1
7	GA5078137	Street elbow, 90 degree, 1” male x 1” female, Banjo	2
8	GA5077914	Nipple, Short, 1” male thread x 1” male thread, Banjo	1
9	GA5078164	Valve, Ball, 1” female thread inlet / outlet, Full port, Lever handle, Banjo	1
10	GA5076007	Cam lever, 1” female coupler, 1” male thread, Banjo	1
11	GA5076005	Cam lever, Male plug, Suits 1” & 1 1/4” couplings, Banjo	1
12	GA5002077	25mm Key Ring SS	1
13	GA5001491	Chain 2mm x 20mm SS x cut 150 Long (not shown)	1
14	GA5000911	Bolt M16 x 30 ZP GR8.8	2
15	GA5000961	Washer 16mm Spring ZP	2
16	GA5001043	Washer 16mm Flat SS HD	2

Boom Valves Assembly

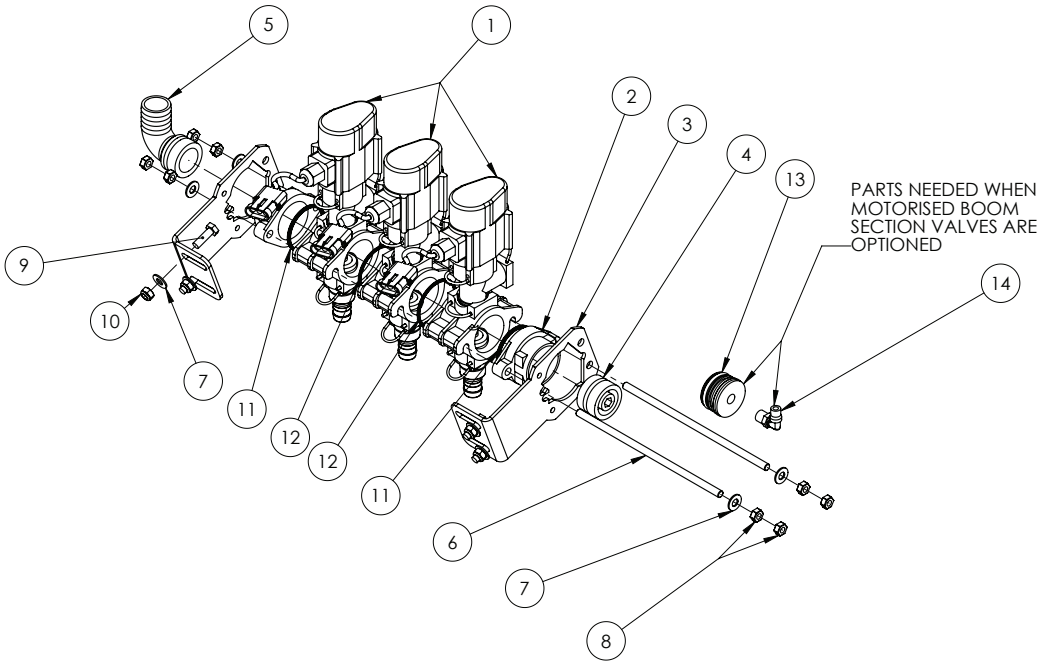

ITEM NO.	PART NUMBER	DESCRIPTION	QTY.
1	GA5065515	Boom valve, Single, AS24, 3 wire, 3 pin AMP connector, Altek	3
2	GA5065810	End cap, Altek boom valve	2
3	GA5065800	Altek boom valve mounting bracket	2
4	GA5065680	Plug, AS40 male, Altek	1
5	GA5065620	Hose barb, Elbow, 90 degree, AS40 x 33mm hose barb, Altek	1
6	GA5065805	Connecting rod suit 3 bank (303 SS)	2
7	GA5003643	Washer 8mm Flat SS HD	12
8	GA5011499	Nut M8 Hex ZP	8
9	GA5004711	Bolt M8 x 25 ZP GR8.8	4
10	GA5004917	Nut M8 Nyloc ZP	4
11	41214	O-Ring 42.0 x 3.0mm FPM-75	2
12	GA5012507	O-Ring 55.25 x 2.62mm	2
13	GA4582160	Plumbing adaptor, Plug, AS40 male x G1/4" Female Thread, Altek	1
14	GA5016233	Pneumatic fitting, Elbow, 90 degree, 1/4" BSP male x 6mm push type, Metal	1

CONNECTING RODS

PART NUMBER	DESCRIPTION
GA5065805	3 Section connecting rod
GA4562055	4 Section connecting rod
GA4562125	5 Section connecting rod
GA4562050	6 Section connecting rod
GA4562045	7 Section connecting rod
GA4562040	8 Section connecting rod

BOOM VALVES

PART NUMBER	DESCRIPTION
GA5065740	3 Section Boom Valves
GA5065741	4 Section Boom Valves
GA5065704	5 Section Boom Valves
GA5065705	6 Section Boom Valves
GA5065706	7 Section Boom Valves
GA5065710	8 Section Boom Valves

Note: Boom valve assemblies do not come with plumbing fittings.

Boom Valve Unit Assembly

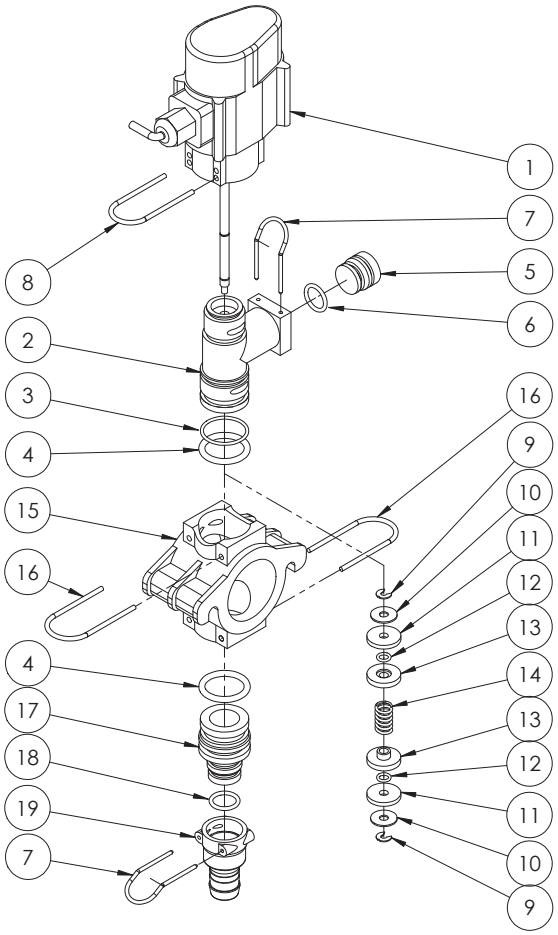

ITEM NO.	PART NUMBER	DESCRIPTION	QTY.
1	-	Valve body	1
2	GA5065515	Tee body	1
3	GA5053510	O-ring, 25 x 2.5mm, fmp 75	1
4	GA5065830	O-ring, 24.3 x 4.2mm, fmp 75	2
5	80376	Plug	1
6	GA5065840	O-ring 18 x 2.5mm fmp 75	1
7	GA5065695	AS24 Safety Pin	2
8	47825	Safety pin	1
9	GA5054650	C-clip	2
10	GA5054640	Washer 17.8 x 6.1 x 1mm	2
11	GA5054645	Rubber Plunger Seal, fpm 90	2
12	GA5053515	O-ring, seal, 3.43 x 3.53mm, fmp 75	2
13	80005	Disk spring locator	2
14	80322	Spring 25mm	1
15	GA5065825	Manifold	1
16	GA5065701	Safety pin AS30	2
17	GA5065835	Plug in hose tail AS30/AS24	1
18	GA5065840	O-ring 18 x 2.5mm fmp 75	1
19	GA5065640	Hose barb, AS24 female x 20mm hose	1

Chemical Probe

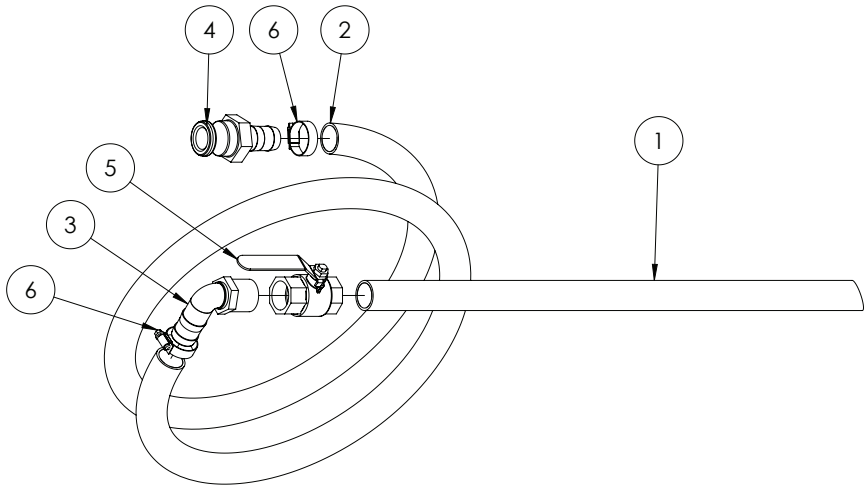

GA4948250 Complete Kit

ITEM NO.	PART NUMBER	DESCRIPTION	QTY.
1	GA5013603	Poly Pipe 25 x 650mm	1
2	GA2000220	Hose, Suction, PVC, 25mm, Black cut to 3.2m	1
3	GA5077723	Hose barb, Elbow, 90 degree, 1" male x 1" hose, Banjo	1
4	GA5076011	Cam lever, 1" male coupling x 1" hose barb, Banjo	1
5	GA5018309	Valve, Ball, 12mm female thread inlet / outlet, Lever handle, SS	1
6	GA5001681	Hose Clamp, 1" SS (20-32/12W)	2

Enviro coupling & hose

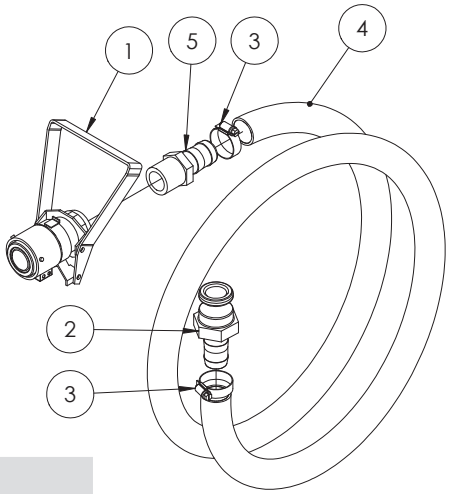

GA5020600 Complete Kit

ITEM NO.	PART NUMBER	DESCRIPTION	QTY.
-	GA5018799	Seal kit, Suit micromatic / enviro drum coupling	-
1	GA5018803	Micromatic drum valve coupling, 3 pin, Viton seals	1
2	GA5076011	Cam lever, 1" male coupling x 1" hose barb, Banjo	1
3	GA5001681	Hose Clamp, 1" SS (20-32/12W)	2
4	GA2000220	Hose, Suction, PVC, 25mm, Black (cut 2840mm long)	1
5	GA5077718	Hose barb, Straight, 1" male thread x 1" hose	1

Air Filter

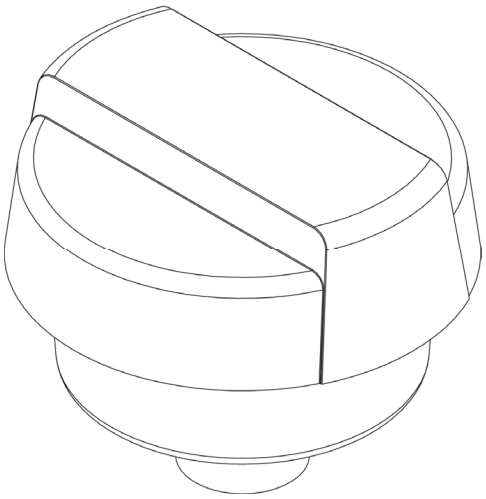

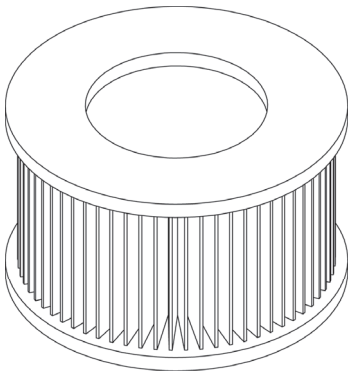

PART NUMBER	DESCRIPTION
GA5005259	Air filter, 1" BSP male thread
GA5049460	Filter element, For filter body GA5005259, Suit foam marker compressor

Hose Clamps

PART NUMBER	DESCRIPTION
GA5004865	8-16mm Hose Clamp
GA5000469	12-20mm Hose Clamp
GA5000999	16-25mm Hose Clamp
GA5001681	20-32mm Hose Clamp
GA5002783	30-45mm Hose Clamp
GA5002873	32-50mm Hose Clamp
GA5003325	40-60mm Hose Clamp
GA5016815	50-70mm Hose Clamp
GA5004241	60-80mm Hose Clamp

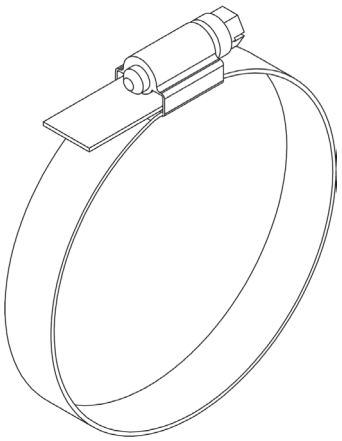

Cable Ties

PART NUMBER	DESCRIPTION	QTY
GA5002173	Cable Tie, Black, 100x2.5mm	1
GA5003517	Cable Tie, Black, 140x3.5mm	1
GA5004455	Cable Tie, Black, 190x4.5mm	1
GA5000685	Cable Tie, Black, 320x7.5mm	1
GA5000687	Cable Tie, Black, 360x4.5mm	1
GA5021235	Cable Tie, Black, 540x7.5mm	1

Hoses

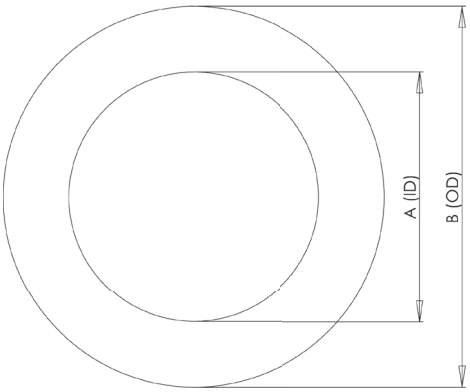

Suction Hose

PART NUMBER	DESCRIPTION	Internal Diameter (A)	Outside Diameter (B)
GA2000218	20mm Suction Hose	20mm	32mm
GA2000222	25mm Suction Hose	25mm	35mm
GA2000224	32mm Suction Hose	32mm	45mm
GA2000226	38mm Suction Hose	38mm	48mm
GA2000229	51mm Suction Hose	51mm	63mm
GA2000230	63mm Suction Hose	63mm	76mm
GA2000232	75mm Suction Hose	75mm	93mm

Note: Suction hose can be identified by its external green stripe and wire reinforcement.

Pressure Hose

PART NUMBER	DESCRIPTION	Internal Diameter (A)	Outside Diameter (B)
GA2000200	7mm Pressure Hose	7mm	12.5mm
GA2000211	13mm Pressure Hose	13mm	20mm
GA2000216	20mm Pressure Hose	20mm	28mm
GA2000219	25mm Pressure Hose	25mm	34mm
GA2000223	32mm Pressure Hose	32mm	43mm
GA2000225	38mm Pressure Hose	38mm	48mm

Note: Pressure hose can be identified by its blue internal layer.

PVC Hose

PART NUMBER	DESCRIPTION	Internal Diameter (A)	Outside Diameter (B)
GA2000220	25mm PVC Hose	25mm	32mm
GA2000227	40mm PVC Hose	40mm	50mm
GA2000228	50mm PVC Hose	50mm	58mm

Note: PVC Hose can be identified by its ribbed outer surface.

Sight Tube Hose

PART NUMBER	DESCRIPTION	Internal Diameter (A)	Outside Diameter (B)
GA2000209	12mm Clear Sight Tube Hose		
GA2000210	12mm Clear Sight Tube Hose with wire		

Lay Flat Hose

PART NUMBER	DESCRIPTION	Internal Diameter (A)	Outside Diameter (B)
GA5021395	50mm Blue Lay flat Hose		

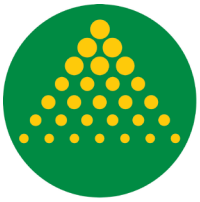

GOLDACRES

Australia's World Class Sprayers

www.goldacres.com.au