Prairie Pro Series 2

Manual GA8701601-REV01

GA6000250 - 5000L
GA6000260 - 6500L
GA6000270 - 8500L
GA6000280 - 10000L

PARTS MANUAL
MY22

GOLDACRES

For further information about any of the products shown please visit - www.goldacres.com.au

© Goldacres Trading 2021
This publication and all designs are copyright.

No part, products or designs may be reproduced by any process except in accordance with the Copyright act 1968.

All information in this operator's manual is based on the latest product information available at the time of printing. The policy of Goldacres is one of continuous improvement and as such, Goldacres reserve the right to alter any specifications and designs without notice and without incurring any obligation regarding such changes.

No part of this manual may be reproduced without written permission from Goldacres. All photographs and technical information remain the property of Goldacres.

Goldacres Trading Pty Ltd
3 Morang Crescent
Mitchell Park Vic 3355
Ph: 03 5342 6399
Fax: 03 5342 6308

Contents

01 - Service & Miscellaneous Parts 11

Miscellaneous Parts, Nozzles 12
Miscellaneous Parts, Hose 13
Miscellaneous Parts, Paints & Corrosion Inhibitors 14
Miscellaneous, Greasing 15
Miscellaneous, Pneumatic 16

02 - DFO & Sales Kits 17

DFO & Sales Kits 18

03 - Chassis 20

Chassis, 5000L, 6500L, 8500L & 10,000L 21
Hydraulic Lift, Accumulator Manifold Mounting 22
Hydraulic Accumulator Manifold 23
Chassis Pull and Hydraulic Filter Mounting 24
Chassis Pull, 5000L & 6500L 25
Chassis Pull, 8500L & 10,000L 26
Hydraulic Jack 27
Tow Eye Assembly 28
Pump Guard, Long, 5000L 29
Pump Guard Short, 6500L 30
Pump Guard, Zeta 260, 8500L 31
Pump Guard, ARAG MSP400, 8500L & 10,000L 32
Pump Guard, Zeta 260, 8500L & 10,000L, with Agitation Pump 33
Mounting Assembly, Diaphragm Pump, UDOR, Zeta 260 34
Mounting Assembly, Diaphragm Pump, UDOR, Zeta 260, with Agitation 35
Pump, MSP400 Assembly, Single Mounting 36
Pump, MSP400 Assembly, Dual Mounting 37
Platform Mounting, 5000L & 6500L 38
Platform Mounting, 8500L & 10,000L 39
Platform Access Ladder Assembly 40
Platform & Gauges, 5000L & 6500L 41
Platform & Gauges, 8500L & 10,000L 42
Boom Rest Assembly, 5000L & 6500L 43
Boom Rest Assembly, 8500L 44
Boom Rest Assembly, 10,000L 45
Boom Rest, 48mt 46
Air Reservoir Mounting, 5000L & 6500L 47
Air Reservoir Mounting, 8500L & 10,000L 48
Tank, Air Reservoir 49
Check Valve Assembly, Air Reservoir 50
Transducer Assembly, Air Reservoir 51

04 - Pumps 53

Pump, UDOR, Zeta 260, Parts Breakdown 54
Diaphragm Pump, UDOR Zeta 260, Parts List 55
Pump, MSP400, Breakdown 56
Pump, MSP400, Parts List 57
Hypro Fill Pump 58
Hypro Fill Pump 59
Graco Fill Pump 60

05 - Tanks 62

500L, Rinse Tank, 5000L & 6500L 63
800L, Rinse Tank, 8500L & 10,000L 64
Rinse Tank, Mounting 65
Main Tank, 5000L 66
Main tank, 6500L 67
Main Tank, 8500L 68
Main Tank, 10,000L 69
Hoses, Main Tank, 5000L 70

Hoses, Main Tank, 6500L 71
Hoses, Main Tank, 8500L 72
Hoses, Main Tank, 10,000L 73
Dual Agitator, Plumbing Assembly, Front & Rear 74
Tank Rinse Nozzle Assembly, Elbow 75
Tank Rinse Nozzle Assembly, Tee 76
Valve, Breather Assembly 77
Sump Drain Assembly, Main Tank 78
Tank Overflow Assembly, 3” 79
Super Mix Agitator Assembly 80
Tank Inlet, 1”, 5000L, 6500L & 8500L 81
Tank Inlet, 1”, 10000L 82
Tank Inlet Assembly, 1” 83
Tank Inlet, 1 1/2” 84
Tank Inlet Assembly, 1 1/2” 85
Tank inlet, 3” 86
Tank Inlet Assembly, 3” 87
Single Agitator Plumbing, 5000L & 6500L 88
Manifold Tee, 3” 89
Handle, Tank Drain, 5000L - 6500L 90
Handle, Tank Drain, 8500L - 10,000L 91
Bracket, Tank Strap 92

06 - Side Modules & Controls 94

RH Pod Cover 95
RH Pod, Cover Plate 96
RH Pod, Suction Filters 97
RH Pod, Suction Filter Mounting Assembly 98
RH Pod, Pressure Filter & Regulator Valve 99
Valve Assembly, Pressure & Regulator, Centrifugal Pump 100
Filter Clean Valve, Assembly 101
RH Pod, Hydraulic Manifold & Compressor Mounting 102
Hydraulic Manifold Assembly, Chassis Control 103
RH Pod, Compressor Guard 104
RH Pod, Compressor Breakdown 105
ABAC, Air Compressor, Service Kits 106
LH Pod, Build Options 107
LH Pod, Fill Station 108
LH Pod, Fill Pump & Plumbing Assembly Mounting 109
Chemical Pump, Valve Assembly 110
LH Pod, Plumbing Manifold, Fill 111
LH Pod, 3” Fill Pump, Manifold Assembly 112
Rinse Tank Fill Manifold with Micromatic, Option (50020) 113
Rinse Tank Fill Manifold without Micromatic, (Default) 114
Air Feed Valve, Chemical Pump 115
Tank Rinse Manifold 116
Valve Assembly, Tank Rinse 117
LH Pod, Wash Down Pump & Main Fill Manifold Mounting 118
Valve Assembly, Hopper Bypass 119
LH Pod, Manual Fill Manifold 120
LH Pod, Wash Down Gun Pump 121
LH Pod, Tool Box Door Assembly, PLC & Chemical Pump Mounting 122
Tool Box Door & Strut Mounting 123
Tool Box Door (New) 124
Tool Box Door Assembly (New) 125
Tool Box Door Assembly (Old) 126
LH Pod, Hand Wash Tank Mounting 127
Hopper Tee Assembly 128
Hand Wash Tank Assembly 129
LH Pod, Cover 130
LH Pod, Controls & Cover Plate Assembly 131
LH Pod, Control Panel 132

07 - Plumbing 134

Flow Meter Assembly, Raven 60P, High Pulse 135
Flow Meter Assembly, Raven 60P, High Pulse 136
Boom Recirculation Valve, Assembly 137
Chemical Suction Probe 138
Micromatic Probe, Hose Assembly 139
Arag, 319 Series, Suction Filter 140
Arag, 330 Series, Pressure Filter 141
Nozzles - Fenceline, Solenoid Operated, 1” 142
Nozzles - 1”, Teejet Single Body 143
NCV Control Nozzle - Hawkeye 2 144
Nozzles - Teejet Clock Face Body 145
Nozzle Body, Clamp, 1” Altek 146
Nozzles, Altek Dual Spray Body. 147
Nozzles, Altek Spray Stop, 4mm 148
Nozzles, Altek Spray Stop, 6mm, Suit, TeeJet Nozzle Body. 149
Nozzles, Altek Spray Stop, 6mm in 4mm Out 150
Nozzles, Direct Control, Dual, Altek 151
Nozzles, Direct Control, Dual Assembly 152
Boom Plumbing, 24mt, Broadacre 153
Boom Plumbing, 24mt, Rowcrop 154
Boom Plumbing, 24mt, RIVX 250mm 155
Boom Plumbing, 28mt, Broadacre 156
Boom Plumbing, 28mt Rowcrop 157
Boom Plumbing, 28mt, RIVX 250mm 158
Boom Plumbing, 30mt, Broadacre 159
Boom Plumbing, 30mt, Rowcrop 160
Boom Plumbing, 30mt, RIVX 250mm 161
Boom Plumbing, 36mt, Broadacre, 500mm Spacing. 162
Boom Plumbing, 36mt, Rowcrop, 500mm Spacing. 163
Boom Plumbing, 36mt, 250mm Spacing. 164
Boom, Recirculation Poly’s, 24mt - 36mt. 165
Boom Plumbing, 48mt. 166

08 - Decals 167

Decal Kit, GA8701568. 168
Decal Kit, GA8701613. 169
Decal Kit, GA8701688. 170
Decal Kit, GA8701569. 171
Decal, Dry Sight Tube 172
Tank Decals. 173

09 - Electrical 175

Electrical, Lighting - Boom Tip LED’s, RIVX 176
Electrical, Lighting - Boom Tip LED’s, 48mt 177
Beacon, Pre S/N 203934 178
Beacon, S/N 203934 Onward 179
Tail Light 180
POD, Work Light 181
Camera, Rear View 182
Boom Module 183
Keypad, CAN, 8 Button. 184
Keypad, CAN, 12 Button. 185
Keypad, CAN, 16 Button. 186
Keypad, Cabin Mount Assembly, 8 Button. 187
Keypad & Mount, CAN, 12 & 16 Button. 188
Display Screen, 12” Touch. 189
Fuse Box, Chassis. 190
7 Pin Trailer Plug 191
ISO, Electrical Connectors. 192
Raven, RCM & XRT Plugs 193
Raven, AMP Plugs. 194

Electrical Connectors, Weather Pack 195
Electrical Connectors - Deutsch 196
Electrical Connectors - Deutsch 197
Electrical Connectors - Deutsch 198

10 - Hydraulic & Pneumatics 200

Hydraulic Manifold Assy, Chassis Control. 201
Hydraulic Manifold Assy, Chassis Control. 202
Hydraulic Manifold, Chassis Control, Function Table 203
Hydraulic Manifold Assembly, Boom Control 204
Hydraulic Manifold, Boom Control, Function Table 205
Hydraulic Manifold, Boom Control, Factory Set Positions. 206
Hydraulic Manifold, Raven XRT 207
Hydraulic Manifold, Boom Control, 48mt 208
Hydraulic Manifold, 48mt, Funcation Table. 209
Cylinder, Hydraulic, Boom Lift, 5000L & 6500L 210
Cylinder, Hydraulic, Boom Lift, 8500L & 10,000L. 211
Cylinder, Hydraulic, Jack 212
Cylinder, Hydraulic, Yaw, 36mt. 213
Cylinder, Hydraulic Boom Tilt 214
Cylinder, Cushion, Fold, Flange Base Mount 215
Cylinder, Hydraulic, Fold, Flange Base Mount, REV-05 216
Cylinder, Hydraulic, Fold, Flange Base Mount, REV-06 217
Cylinder, Hydraulic Yaw, 42mt & 48mt 218
Cylinder, Hydraulic Boom Tilt, 48m 219
Cylinder, Hydraulic, Second Stage Fold, 48mt 220
Cylinder, Hydraulic, Third Stage Fold, 48mt 221
Cylinder, Hydraulic, Bi-Fold, RIVX 222
Cylinder, Breakaway 223
Cylinder, Hydraulic, Centre Level 224
Cylinder, Hydraulic, Boom Latch 225
Hydraulic Pressure Filter, Hydac. 226
Hydraulic Fitting, Tractor Remote. 227
Hydraulic, ID Tags 228
Pneumatic Manifold. 229
Air Tank, 0.9L, 10 Bar, Rapid Fire. 230
Air Filter, 1” 231

11 - Boom Centre 233

Boom Centre Build Options. 234
Paralift Arms, 5000L & 6500L 235
Cylinder, Hydraulic, Lift, 5000L - 6500L. 236
Paralift Arms, 8500L - 10,000L 237
Cylinder, Hydraulic, Lift, 8500L - 10,000L 238
Paralift, 24-36mt 239
Paralift, 48mt. 240
Long Delta Links, Mounting 241
Delta Link, Long 242
Short Delta Links, Mounting. 243
Delta Link, Short 244
Hydraulic Yaw Mounting, 36mt 245
Roll Shockers 246
Boom Centre, Boom Mount Hinge Bracket 247
LH Boom Mount Hinge 248
RH Boom Mount Hinge 249
Hydraulic Tilt & Fold, RIVX, 24mt - 36mt 250
Hydraulic Cylinder Assembly, Fold, 24mt - 36mt 251
Hydraulic Tilt & Fold, RIVX, 48mt 252
Hydraulic Cylinder Assembly, Fold, 48mt 253
Hydraulic, Centre Leveling 254
Hydraulic Manifold Mounting, Centre Section, 24mt - 36mt 255
Hydraulic Manifold, Mounting Bracket, Breakaway. 256

Hydraulic Manifold Mounting, Centre Section, 48mt. 257
Hydraulic Manifold, Adaptor Fittings, Raven XRT 258
Hydraulic Manifold, Boom Control without Raven XRT, 24m - 30m 259
Hydraulic Manifold, Boom Control with Raven XRT, 24mt 260
Hydraulic Manifold, Boom Control with Raven XRT, 28mt - 42mt 261
Hydraulic Manifold, Boom Control Assembly, 48mt (Front View). 262
Hydraulic Manifold, Boom Control Assembly, 48mt (Rear View) 263
Boom Centre Level, Chain Assembly & Mounting Clamps 264
Rate Control, Camera & Working Light Mounting Locations. 265
Pneumatic Manifold Mounting, Rapid Fire, 3TS, 10 Section 266
Air Pressure Regulator 267
Tilt Sensor, Centre Section, Mounting 268
Spray Bar, Mounting Brackets with Boom Mounting & Tilt Bolts. 269
Centre Section, Mounting Clamps 270
Cover, Centre Section Manifold, 24mt - 36mt 271
Cover, Centre Section Manifold, 48mt 272
Oversize Sign (Old) 273
Oversize Sign (New). 274

12 - Boom Wings 275

Boom Wings, 24mt - 36mt 276
Breakaways. 277
Boom, Breakaway Tip Assembly, 2mt 278
Boom, Breakaway Tip Assembly, 2.3mt. 279
Boom, Breakaway Tip Assembly, 2.5mt. 280
Breakaway, Plumbing Mounting Clamps & LED Lights. 281
Boom, 24mt - 30mt, Bi-Fold Assembly, RIVX. 282
Boom, 36mt, Bi-Fold Assembly, RIVX 283
Recirculation Poly, 24mt - 30mt & Hydraulic Boom Line Tubing 284
Nudge Bar, Inner, 24mt - 30mt, RIVX. 285
Bracket, Nozzle Guard, Tri-Tech, Up To (S/N 203888) (Old Style). 286
Bracket, Nozzle Guard, RIVX Boom, Inner Wing, From (S/N 203889) 287
Bracket, Nozzle Guard, RIVX Boom, Inner Wing, From (S/N 203889) 288
Bracket, Nozzle Guard, RIVX Boom, Outer Wing, From (S/N 203889) 289
Boom Outer, RIVX, 24mt, Boom Poly Mounting. 290
Boom Outer, RIVX, XRT Bracket & Air Tank Mount, 24mt. 291
Boom Wing, Bi-Fold, RIVX. 292
Boom Stopper, Rubber, with Mounting Plate, 24mt - 30mt 293
Boom Light Assembly, Blue. 294
Boom, Bi-Fold Catch Mounting & Boom Protectors. 295
Boom, Bi-fold Catch Assembly, Single Rubber Buffer 296
Boom, Bi-fold Catch Assy, Dual Rubber, 28mt - 42mt (From S/N 203944). .297
Recirculation Poly, 36mt & Hydraulic Boom Line Tubing. 298
Nudge Bar, Inner, 36mt 299
Nudge Bar, Outer, 36mt. 300
Poly Clamp, Recirculation, 36mt, Outer 301
Breakaway Assembly, RIVX 302
Boom Rest, RIVX Roller. 303
Boom Wings, 48mtr 304
Boom Mounting Hardware, 48mt. 305
Boom Catch, 48mt 306
Boom Catch Arm Assembly, 48mt. 307
Second Stage Fold, 48mt 308
Latch Assembly, Second Stage Fold, 48m. 309
Rose Ends & Boom Stops, Second Stage Fold, 48m 310
Rose End Assembly, Forged, Top 311
Rose End Assembly, Forged, Bottom 312
Rose End, Forged 313
Rose End Link, Heavy Duty, (Old Style) 314
Boom Protectors, 48m 315
Boom Protector Position, Large, 48mt. 316
Boom Support Bracket & Cord Protector Position, Small, 48mt. 317
Rapid Fire Air Tank & XRT Sensor Mounting, 48mt. 318

3rd Stage Fold, 48mt. 319
Boom Link Assembly, 48mt 320
3D Breakaway, 48mt 321
3D Breakaway Mechanism 322
Hydraulic Cylinder Mounting Assembly, Third Stage Fold, 48m 323
Chain Assembly, Breakaway, 48m 324
Pivot Assembly, Breakaway, 48m 325
Nozzle Body & Blue LED Working Light Mounting, 48mt 326
Working Light Assembly, Blue LED 327
Nozzle Bracket & Boom Poly Clamps, 48mt 328
Nozzle Bracket Extension Assembly, 48m 329
Nozzle Body Bracket Mounting, Breakaway, 48mt. 330
Boom End Protector, 48mt 331

13 - Wheels, Axles & Mudguards 332

Rims & Tyres Options, 5000L. 333
Rims & Tyre Options, 6500L 334
Rims & Tyre Options, 8500L 335
Rim & Tyre Options, 10,000L. 336
Suspension Assembly, 2mt, Air Bag, Un-Braked Axle, 5000L - 6500L. 337
Suspension Assembly, 2mt, Air-Bag, Braked Axle 5000L - 6500L 338
Suspension Assembly, 3mt, Air-Bag, Un-Braked Axle 5000L - 6500L 339
Suspension Assembly, 3mt, Air-Bag, Braked Axle 5000L - 6500L 340
Suspension Assembly, 5000L - 6500L. 341
Axle Assembly, Rigid, 2mt Braked Axle, 5000L - 6500L. 342
Axle Assembly, Rigid, 3mt Braked Axle, 5000L - 6500L. 343
Suspension Assembly, Un-Braked Axle, 8500L - 10,000L. 344
Suspension Assembly, Braked Axle, 8500L - 10,000L. 345
Suspension Assembly, Ride Height Control & Suspension, 8500L - 10,000L346
Axle, 2.2mt, Braked, 8500L - 10,000L. 347
Axle, 3mt, Braked, 8500L - 10,000L 348
Hub, 90 Series, Un-Braked 349
Hub, 110 Series, Un-Braked 350
Hub, 110 Series, Braked 351
Brake Mechanism Assembly, ADR, 110 Series 352
Brake Mechanism Assembly, ADR, 150 Series, Braked, LH. 353
Brake Mechanism Assembly, ADR, 150 Series, Braked, RH 354
Mudguard, 500mm 355
Mudguard, 630mm 356
Mudguard, 800mm 357

14 - Induction Hopper 358

Induction Hopper, Mounting Assembly 359
Induction Hopper, Drum Rinse & Support Bracket 360
Induction Hopper, Lid & Tank Rinse 361
Induction Hopper, Lid Hinges & Hopper Bottom Assembly 362
Drum Rinse Assembly 363
Hopper Bottom, Plumbing Assembly. 364
Wash Down Gun 365

15 - Height Control 366

XRT, Rotary Sensor & Tilt Sensors 367
Raven XRT Node & Rotary Angle Sensor. 368
Raven XRT Boom Modules & Centre Section Height Sensor 369
Raven XRT Boom Sensor Assembly 370

16 - Schematics 372

Hydraulic Schematics, Main, 24mt - 48mt 373
Hydraulic Schematics, Boom, 24mt - 36mt 374
Hydraulic Schematics, Raven Ultraglide XRT, 24mt - 36mt 375
Hydraulic Schematics, Main, 48mt. 376

Hydraulic Schematics, Raven Ultraglide XRT, 48mt 377
Hydraulic Schematics, Hydraulic Jack, Hydraulic Brakes 378
Hydraulic Hoses (Contact Goldacres Dealer Support) 379
Plumbing Schematics, Diaphragm Pump. 380
Plumbing Schematics, Diaphragm Pump. 381
Plumbing Schematics, Centrifugal Pump 382
Plumbing Schematics, Centrifugal Pump 383
Electrical Schematics, Raven XRT, Boom Leveling. 384
Electrical Schematics, Raven RCM with Direct Control Masters 385
Electrical Schematics, Raven RCM with Direct Control Masters 386
Electrical Schematics, Raven Hawkeye 387
Electrical Schematics, Smart Steer 388
Electrical Schematics, Cabin 389
Electrical Schematics, Main Chassis 390
Electrical Schematics, Boom Centre 391
Electrical Schematics, 36mt - 42mt, PLC Boom Hydraulics. 392
Electrical Schematics, 48mt, PLC Boom Hydraulics 393
Electrical Schematics, RH Pod, Hydraulics 394
Electrical Schematics, Networks 395
Electrical Schematics, Network Layout 396
Electrical Schematics, Raven ISO, Tractor, (Optional). 397
Pneumatic Schematics 398
Pneumatic Schematics 399

17 - Sprayer Options 400

Sprayer Options Index, 5000L. 401
Sprayer Options Index, 6500L. 402
Sprayer Options Index, 8500L. 403
Sprayer Options Index, 10,000L 404
Goldacres Terms & Conditions of Sale & Warranty. 405

01 - Service & Miscellaneous Parts

Miscellaneous Parts, Nozzles

TEEJET NOZZLES	
PART NUMBER	DESCRIPTION
GA8100267	NOZZLE TIP, XR TEEJET, GREEN 015, POLYMER, XR110015-VP
GA8100272	NOZZLE TIP, XR TEEJET, YELLOW 02, POLYMER, XR11002-VP
GA8100275	NOZZLE TIP, XR TEEJET, BLUE 03, POLYMER, XR11003-VP
GA8100278	NOZZLE TIP, XR TEEJET, RED 04, POLYMER, XR11004-VP
GA8100280	NOZZLE TIP, XR TEEJET, BROWN 05, POLYMER, XR11005-VP
GA8100282	NOZZLE TIP, XR TEEJET, GREY 06, POLYMER, XR11006-VP
GA8100284	NOZZLE TIP, XR TEEJET, WHITE 08, POLYMER, XR11008-VP
GA8100429	NOZZLE TIP, AIXR TEEJET, GREEN 015, POLYMER, AIXR110015VP
GA8100431	NOZZLE TIP, AIXR TEEJET, YELLOW 02, POLYMER., AIXR11002VP
GA8100430	NOZZLE TIP, AIXR TEEJET, VIOLET 025, POLYMER, AIXR110025VP
GA8100432	NOZZLE TIP, AIXR TEEJET, BLUE 03, POLYMER, AIXR11003VP
GA8100433	NOZZLE TIP, AIXR TEEJET, RED 04, POLYMER, AIXR11004-VP
GA8100434	NOZZLE TIP, AIXR TEEJET, BROWN 05, POLYMER, AIXR11005VP
GA8100387	NOZZLE TIP, AI TEEJET, GREEN 015, SS, AI110015-VS
GA8100389	NOZZLE TIP, AI TEEJET, YELLOW 02, SS, AI11002-VS
GA8100388	NOZZLE TIP, AI TEEJET, VIOLET 025, SS, AI110025-VS
GA8100390	NOZZLE TIP, AI TEEJET, BLUE 03, SS, AI11003-VS
GA8100391	NOZZLE TIP, AI TEEJET, RED 04, SS, AI11004-VS
GA8100392	NOZZLE TIP, AI TEEJET, BROWN 05, SS, AI11005-VS
GA8100393	NOZZLE TIP, AI TEEJET, GREY 06, SS, AI11006-VS
GA8100394	NOZZLE TIP, AI TEEJET, WHITE 08, SS, AI11008-VS
GA8100225	NOZZLE TIP, TTI TEEJET, GREEN 015, POLYMER, TTI110015-VP
GA8100227	NOZZLE TIP, TTI TEEJET, YELLOW 02, POLYMER, TTI11002-VP
GA8100226	NOZZLE TIP, TTI TEEJET, VIOLET 025, POLYMER, TTI110025-VP
GA8100228	NOZZLE TIP, TTI TEEJET, BLUE 03, POLYMER, TTI11003-VP
GA8100229	NOZZLE TIP, TTI TEEJET, RED 04, POLYMER, TTI11004-VP
GA8100230	NOZZLE TIP, TTI TEEJET, BROWN 05, POLYMER, TTI11005-VP
GA8100693	NOZZLE TIP, TP4003E-SS, STAINLESS STEEL 03, 40 DEGREE, TEEJET
GA8100699	NOZZLE TIP, TP4004E-SS, STAINLESS STEEL 04, 40 DEGREE, TEEJET
GA8100703	NOZZLE TIP, CFLD-XC4003, COMPACT FAN LOW DRIFT, BLUE, ARAG
GA8100704	NOZZLE TIP, CFLD-XC4004, COMPACT FAN LOW DRIFT, RED, ARAG

LECHLER NOZZLES	
PART NUMBER	DESCRIPTION
GA8100000	NOZZLE TIP, AIR INJECTOR ID3 120-01, ORANGE, POLYMER, LECHLER
GA8100001	NOZZLE TIP, AIR INJECTOR ID3 120-015, GREEN, POLYMER, LECHLER
GA8100002	NOZZLE TIP, AIR INJECTOR ID3 120-02, YELLOW, POLYMER, LECHLER
GA8100003	NOZZLE TIP, AIR INJECTOR ID3 120-025, PURPLE, POLYMER, LECHLER
GA8100004	NOZZLE TIP, AIR INJECTOR ID3 120-03, BLUE, POLYMER, LECHLER
GA8100005	NOZZLE TIP, AIR INJECTOR ID3 120-04, RED, POLYMER, LECHLER
GA8100006	NOZZLE TIP, AIR INJECTOR ID3 120-05, BROWN, POLYMER, LECHLER
GA8100007	NOZZLE TIP, AIR INJECTOR ID3 120-06, GREY, POLYMER, LECHLER
GA8100008	NOZZLE TIP, AIR INJECTOR ID3 120-08, WHITE, POLYMER, LECHLER
GA8100018	NOZZLE TIP, AIR INJECTOR COMPACT IDK 120-01, ORANGE, POLYMER, LECHLER
GA8100019	NOZZLE TIP, AIR INJECTOR COMPACT IDK 120-015, GREEN, POLYMER, LECHLER
GA8100020	NOZZLE TIP, AIR INJECTOR COMPACT IDK 120-02, YELLOW, POLYMER, LECHLER
GA8100021	NOZZLE TIP, AIR INJECTOR COMPACT IDK 120-025, PURPLE, POLYMER, LECHLER
GA8100022	NOZZLE TIP, AIR INJECTOR COMPACT IDK 120-03, BLUE, POLYMER, LECHLER
GA8100023	NOZZLE TIP, AIR INJECTOR COMPACT IDK 120-04, RED, POLYMER, LECHLER
GA8100024	NOZZLE TIP, AIR INJECTOR COMPACT IDK 120-05, BROWN, POLYMER, LECHLER
GA8100025	NOZZLE TIP, AIR INJECTOR COMPACT IDK 120-06, GREY, POLYMER, LECHLER
GA8100026	NOZZLE TIP, AIR INJECTOR COMPACT IDK 120-08, WHITE, POLYMER, LECHLER
FILTERS	
GA5076947	CHECK VALVE, 5PSI, FILTER, NOZZLE TIP, 50 MESH SCREEN, TEEJET, 4193B-PP-5-50SS
GA5077158	FILTER, NOZZLE TIP, 24 MESH, POLYPROPYLENE, SS, TEEJET, 8079-PP-24
GA5077159	FILTER, NOZZLE TIP, 50 MESH, POLYPROPYLENE, SS, TEEJET, 8079-PP-50
GA5077160	FILTER, NOZZLE TIP, 80 MESH, POLYPROPYLENE, SS, TEEJET, 8079-PP-80
GA5077156	FILTER, NOZZLE TIP, 100 MESH, POLYPROPYLENE, SS, TEEJET, 8079-PP-100
GA5077157	FILTER, NOZZLE TIP, 200 MESH, POLYPROPYLENE, SS, TEEJET, 8079-PP-200
CAPS	
GA8100443	NOZZLE CAP, BLACK, TEEJET, SUIT TJ60, AI, AIUB, SJ3, DG TWINJET, TTI, AITTJ60, CP114442-1-CE
GA8100464	NOZZLE CAP, BLACK, TEEJET, SUIT FLAT SPRAY SMALLER CAPACITY NOZZLES (UP TO 08), CP114440-1-CE
GA8100059	NOZZLE CAP, 10mm ACROSS FLATS, BLACK, LECHLER
WASHER	
GA5055245	WASHER, NOZZLE CAP SEAL, RUBBER, 19 OD X 9 ID, SUIT TEE JET NOZZLE, REPLACES CP19438-EPR

GA7800001 GOLDACRES	MISCELLANEOUS PARTS, NOZZLES, WASHERS, FILTERS & CAPS	REV 00

PART NUMBER	DESCRIPTION
SUCTION HOSE	
GA2000218	HOSE, SUCTION, WIRE REINFORCED, 20mm, BLACK, HOS20S, SOLD PER METER, 20M IN A ROLL
GA2000222	HOSE, SUCTION, 25mm, WIRE REINFORCED, HOS25S, SOLD PER METER, 20M IN A ROLL
GA2000224	HOSE, SUCTION, 32mm, WIRE REINFORCED, HOS32S, SOLD PER METER, 20M IN A ROLL
GA2000226	HOSE, SUCTION, 38mm, WIRE REINFORCED, HOS38S, SOLD PER METER, 20M IN A ROLL
GA2000229	HOSE, SUCTION, 51mm, WIRE REINFORCED, HOS51S, SOLD PER METER, 20M IN A ROLL
GA2000230	HOSE 63mm SUCTION (WIRE REINFORCED), HOS63S, SOLD PER METER,
GA2000232	HOSE, SUCTION, 75mm, WIRE REINFORCED, HOS75S, SOLD PER METER, 20M IN A ROLL
NOTE: SUCTION HOSE CAN BE IDENTIFIED BY ITS EXTERNAL GREEN STRIPE AND WIRE REINFORCEMENT.	
PRESSURE HOSE	
GA2000200	HOSE, PRESSURE, 7mm, BLACK (250PSI), HOS7P
GA2000211	HOSE, PRESSURE, 12mm, BLACK, 250PSI, HOS13P, SOLD PER METER, ROLL = 250M
GA2000216	HOSE, PRESSURE, 20mm, BLACK 250PSI, HOS20P, SOLD PER METER, ROLL = 100M.
GA2000219	HOSE, PRESSURE, 25mm, BLACK 250PSI, HOS25P, SOLD PER METER, 100M IN A ROLL.
GA2000223	HOSE, PRESSURE, 32mm BLACK (250 PSI), HOS32P, SOLD PER METER, 60M IN A ROLL.
GA2000225	HOSE, PRESSURE, 38mm BLACK (250 PSI), HOS38P, SOLD PER METER, 20M IN A ROLL
NOTE: PRESSURE HOSE CAN BE IDENTIFIED BY ITS BLUE INTERNAL LAYER.	
PVC HOSE	
GA2000220	HOSE, SUCTION, PVC, 25mm, BLACK, HOS25PVC, SOLD PER METER, 30M IN A ROLL.
GA2000227	HOSE, SUCTION, PVC, 40mm, BLACK, HOS40PVC, SOLD PER METER, 20M IN A ROLL
GA2000228	HOSE, PVC, 50mm, BLACK, HOS50PVC, SOLD PER METER, 20M IN A ROLL
GA2000231	HOSE, SUCTION, PVC, 75mm, BLACK, HOS75PVC, SOLD PER METER
NOTE: PVC HOSE CAN BE IDENTIFIED BY ITS RIBBED OUTER SURFACE.	
SIGHT TUBE HOSE	
GA2000209	HOSE, CLEAR, 12mm, SIGHT TUBE, HOS12SIGHT, SOLD PER METER, ROLL = 20M
GA2000210	HOSE, 12mm, CLEAR, WIRE REINFORCED, HOS12WSIGHT, SOLD PER METER, ROLL = 20M

PART NUMBER	DESCRIPTION
LAY FLAT HOSE	
GA2000220	HOSE, SUCTION, PVC, 25mm, BLACK, HOS25PVC, SOLD PER METER, 30M IN A ROLL.
HOSE CLAMPS	
GA5004865	HOSE CLAMP, 3/8,SS (8-16/9W)
GA5000469	HOSE CLAMP, 1/2" SS 12-20/9W3
GA5000999	HOSE CLAMP, 3/4" SS (16-27/12W)
GA5001681	HOSE CLAMP, 1" SS (20-32/12W)
GA5016813	HOSE CLAMP, 1 SS LARGE (25-40/12W)
GA5002783	HOSE CLAMP, 1 1/4, SS (30-45/13W)
GA5002873	HOSE CLAMP, 1 1/2" SS (32-50/12W)
GA5003325	HOSE CLAMP, 2 SS, (40-60/12W)
GA5016815	HOSE CLAMP, 50-70 /12 C7 W4, SS
GA5004241	HOSE CLAMP, 60-80mm, S/S 31/2
CABLE TIES	
GA5002173	CABLE TIE BLACK 100 X 2.5 [C]
GA5003517	CABLE TIE BLACK 140 X 3.5 [C]
GA5004455	CABLE TIES BLACK 190 X 4.5 mm [C]
GA5000685	CABLE TIE BLACK 320 X 7.5mm [C]
GA5000687	CABLE TIE, BLACK, 370X 4.8mm [C] 100PK
GA5021235	CABLE TIE BLACK 540 X 7.5mm [C]
SPIRAL GUARD	
GA5015669	SPIRAL GUARD, 20mm, BLACK
PNEUMATIC HOSE	
GA7000016	HOSE, PNEUMATIC, 3/8", BLACK NYLON, ABT06, AIR BRAKE CORPORATION
GA3500180	HOSE, HI TEMP, MULTIFLUID, 1/4", BLUE,
GA3500181	HOSE, HI TEMP, MULTIFLUID, 1/2", BLUE, RQP18

GA7800002 GOLDACRES	HOSE LIST, PARTS MANUALS	REV 00.B

Miscellaneous Parts, Paints & Corrosion Inhibitors

PART NUMBER	DESCRIPTION
PAINT KITS	
GA5078578	PAINT KIT, 2 PACK, 1L, GOLDACRES GREEN, INC TOP COAT AND HARDENER 4:1
GA5078579	PAINT KIT, 2 PACK, 4L, GOLDACRES GREEN, INC TOP COAT AND HARDENER 4:1
GA5078580	PAINT KIT, 2 PACK, 1L, NEUTRAL GREY, INC TOP COAT AND HARDENER 4:1
GA5078581	PAINT KIT, 2 PACK, 4L, NEUTRAL GREY, INC TOP COAT AND HARDENER 4:1
GA5078582	PAINT KIT, 2 PACK, 1L, BLACK, INC TOP COAT AND HARDENER 4:1
GA5078583	PAINT KIT, 2 PACK, 4L, BLACK, INC TOP COAT AND HARDENER 4:1
CORROSION INHIBITOR	
GA5009289	RUST PREVENTATIVE, G15, 400G AEROSOL PACK [C]
GA5009289-12	RUST PREVENTATIVE, G15, 400G BOX OF 12
GA5025345	G15 FERRO PAK, 5L DRUM
GA5025350	G15 FERRO PAK, 20L DRUM
ELECTRICAL CORROSION INHIBITORS	
GA3000494	ELECTRICAL SPRAY, ANTI CORROSION, LUBRICANT, 450G, CRC 2.26
GA0100028	BATTERY TERMINAL PROTECTOR SPRAY, ANTI CORROSION, YELLOW FILM, CRC 5098, 300G, CRC 5098 [C]

Miscellaneous, Greasing

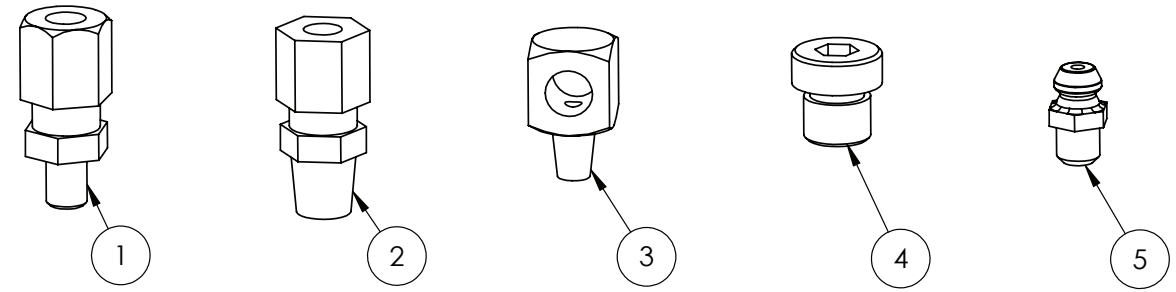

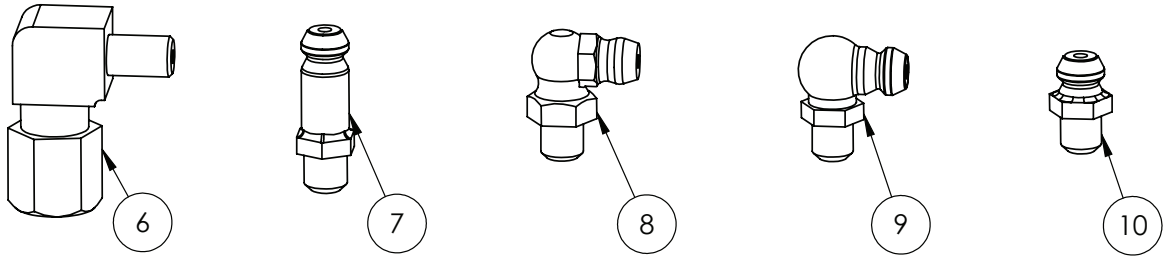

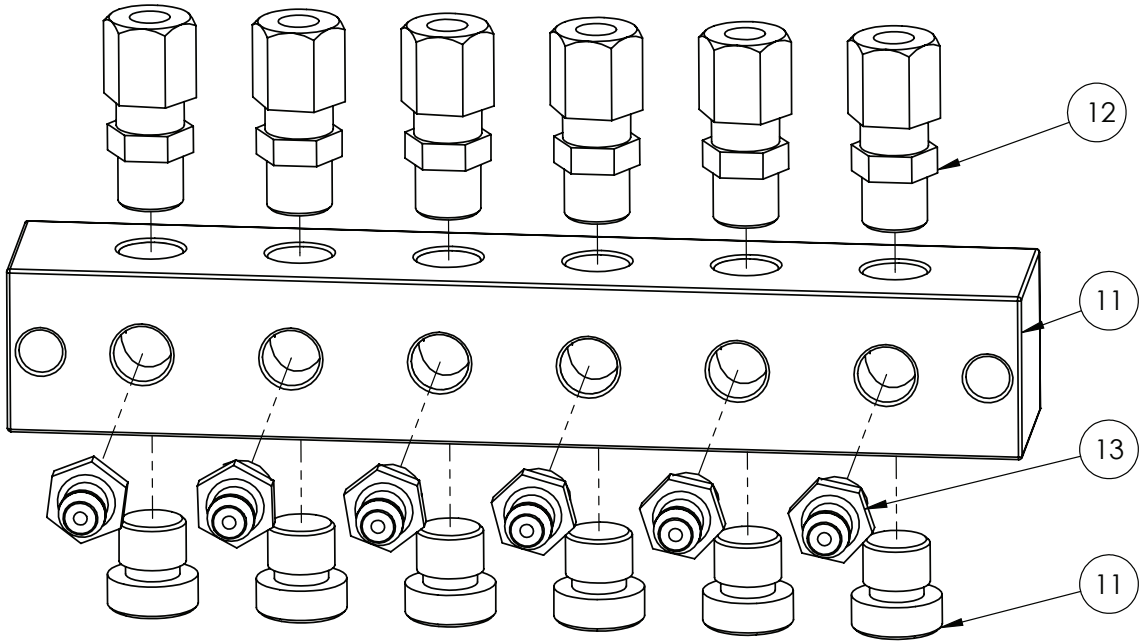

OPTIONAL PARTS			
ITEM	PART NUMBER	DESCRIPTION	QTY
-	GA5070005	GREASE LINE 6mm PRE FILLED (50M/ROLL)	-

IF DESCRIPTION PREFIX IS ASSEMBLY DRAWING ONLY OR PRODUCTION DRAWING ONLY THE ITEM IS NOT FOR SALE			
ITEM	PART NUMBER	DESCRIPTION	QTY
1	GA5069985	GREASE FITTING, LINE CONNECTOR, STRAIGHT 6mm	1
2	GA5071695	COUPLING, MALE STUD, OLIVE TYPE, AUTO GREASER	1
3	GA5071690	ELBOW, M6 X M8 CONNECTOR STUD, AUTO GREASE	1
4	GA5070000-2	PLUG, GREASE HEADER BLOCK	1
5	GA5012203	GREASE NIPPLE, SHORT, 1/4 UNF, MACH0207	1
6	GA5069995	GREASE FITTING, ELBOW 90 DEGREE, LINE CONNECTOR 6mm	1
7	GA5009639	GREASE NIPPLE 1/4" UNF SHORT	1
8	GA5009637	GREASE NIPPLE, ELBOW, 90 DEGREE, 1/4 UNF MALE, MACH02	1
9	GA5051970	GREASE NIPPLE 1/4" UNF LONG	1
10	GA5050450	GREASE NIPPLE, 6mm	1
11	GA5070000	GREASE FITTING HEADER BLOCK 6 WAY, INC. 6mm LINE ADAPTORS AND STRAIGHT GREASE NIPPLES AND PLUGS	1
12	GA5055225	PNEUMATIC FITTING, STRAIGHT ADAPTOR, 1/8 BSP MALE THREAD X NUT RETAINER SUIT 6 mm TUBE	1
13	GA5069980	GREASE NIPPLE, 1/8 BSPP, STRAIGHT	1
GA7800056 GOLDACRES		GREASING, MISCELLANEOUS	REV 00

Miscellaneous, Pneumatic

OPTIONAL PARTS			
ITEM	PART NUMBER	DESCRIPTION	QTY
-	GA5004384	TUBE, NYLON, 4mm, BLACK	-
-	GA5004386	TUBE, NYLON, 4mm, BLUE	-
-	GA5004383	TUBE, NYLON, 6mm, BLACK	-
-	GA5004385	TUBE, NYLON, 6mm, BLUE	-
-	GA7000002	TUBE, NYLON, 6mm, RED	-
-	GA5004382	TUBE, NYLON, 8mm, BLACK	-
-	GA7000016	HOSE, PNEUMATIC, 3/8", BLACK NYLON 150m ROLL, ABT06, AIR BRAKE CORPORATION	

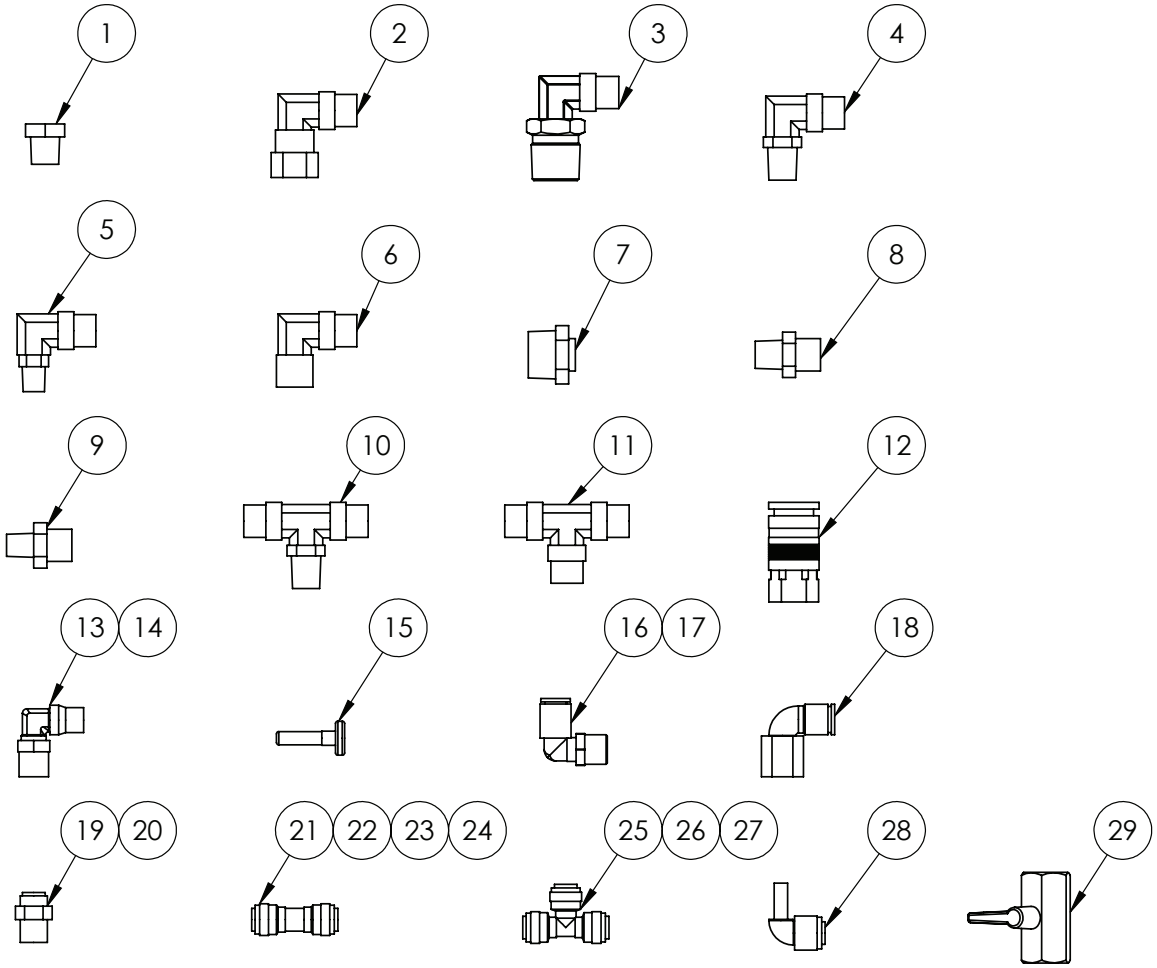

IF DESCRIPTION PREFIX IS ASSEMBLY DRAWING ONLY OR PRODUCTION DRAWING ONLY THE ITEM IS NOT FOR SALE			
ITEM	PART NUMBER	DESCRIPTION	QTY
1	GA5071207	BREATHER, SILENCER, 1/4 BUTTON	1
2	GA5078522	AIR FITTING, ELBOW, SWIVEL 3/8" TUBE, 1/4" NPT FEMALE, PUSH IN, BRASS, ALKON - AQ70-DOTS-6X4	1
3	GA5078524	AIR FITTING, ELBOW, SWIVEL, 3/8" TUBE, 1/2" NPT MALE, PUSH IN, BRASS, ALKON - AQ69-DOTS-6X8	1
4	GA5078518	AIR FITTING, ELBOW, SWIVEL, 3/8" TUBE, 1/4" NPT MALE, PUSH IN, BRASS, ALKON - AQ69-DOTS-6X4	1
5	GA5078525	AIR FITTING, ELBOW, SWIVEL, 3/8" TUBE, 1/8" NPT MALE, PUSH IN, BRASS, ALKON - AQ69-DOTS-6X2	1
6	GA5078519	AIR FITTING, ELBOW, 3/8" TUBE, 1/4" NPT FEMALE, PUSH IN, BRASS, ALKON AQ70-DOT-6X4	1
7	GA5078520	AIR FITTING, STRAIGHT, 3/8" TUBE, 1/2" NPT MALE, BRASS, ALKON - AQ68-DOT-6X8	1
8	GA5078517	AIR FITTING, STRAIGHT, 3/8" TUBE, 1/4" NPT MALE, PUSH IN, BRASS, ALKON - AQ68-DOT-6X4	1
9	GA5078523	AIR FITTING, STRAIGHT, 3/8" TUBE, 1/8" NPT MALE, BRASS, ALKON AQ68-DOT-6X2	1
10	GA5078521	AIR FITTING, TEE, SWIVEL, 3/8" TUBE, 1/4" NPT MALE, PUSH IN, BRASS, ALKON - AQ72-DOTS-6X4	1
11	GA5078516	AIR FITTING, TEE, 3/8" TUBE, PUSH IN, BRASS, ALKON - AQ64-DOT-6	1
12	GA5076620	COUPLING, AIR, 1/4" BSPP FEMALE X FEMALE, BRASS, 200	1
13	GA5016233	PNEUMATIC FITTING, ELBOW, 90 DEGREE, 1/4 BSP MALE X 6mm PUSH IN TYPE, METAL	1
14	GA5052690	PNEUMATIC FITTING, ELBOW, 90 DEGREE, 1/4 BSP MALE X 8mm PUSH TYPE, METAL	1
15	GA5004405	PLUG PUSH IN 6mm	1
16	GA5052690	PNEUMATIC FITTING, ELBOW, 90 DEGREE, 1/4 BSP MALE X 8mm PUSH TYPE, METAL	1
17	GA5078524	AIR FITTING, ELBOW, SWIVEL, 3/8" TUBE, 1/2" NPT MALE, PUSH IN, BRASS, ALKON - AQ69-DOTS-6X8	
18	GA7000015	PNEUMATIC FITTING, FEMALE 1/4" BSPP X 8mm PUSH IN, FEMALE STUD ELBOW	1
19	GA5045140	PNEUMATIC FITTING, NIPPLE, PUSH IN 6mm X 1/4" BSPT, BRASS	1
20	GA5050210	PNEUMATIC FITTING, NIPPLE, 1/8 BSPP MALE X 6mm PUSH IN TYPE	1
21	GA5066991	PNEUMATIC FITTING, PUSH IN, JOINER, 6mm	1
22	GA5078922	PNEUMATIC FITTING, 3/8", PUSH IN, EQUAL JOINER, PLASTIC	1
23	GA5054600	PUSH IN FITTING, REDUCER, STRAIGHT, 6mm TO 4mm	1
24	GA5065175	PUSH IN FITTING, REDUCER, STRAIGHT, 8mm TO 6mm	1
25	GA5016246	TEE, EQUAL, 4mm PUSH IN TYPE, BLACK PLASTIC	1
26	GA5016245	TEE EQUAL PUSH IN 6mm	1
27	GA5067010	TEE, EQUAL, 8mm PUSH IN TYPE, BLACK PLASTIC	1
28	GA5078518	AIR FITTING, ELBOW, SWIVEL, 3/8" TUBE, 1/4" NPT MALE, PUSH IN, BRASS, ALKON - AQ69-DOTS-6X4	1
29	GA5018321	BALL VALVE, 1/4" FEMALE, BLACK LEVER HANDLE, CHROMED	1
GA7800053 GOLDACRES		PNEUMATIC MISCELLANEOUS	REV 00

02 - DFO & Sales Kits

DFO & Sales Kits

GA1000054	DFO, RAVEN XRT, BOOM LEVELLING, G6 S2, PRAIRIE PRO S2 36 / 42M BOOM	
GA1000055	DFO, IN CABIN 12" GHUB DISPLAY AND REVERSE CAMERA, PRAIRIE PRO S2 2022	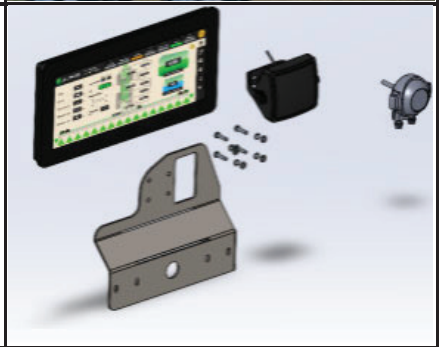
GA1000056	DFO, 3" FILL PUMP, PRAIRIE PRO SERIES 2	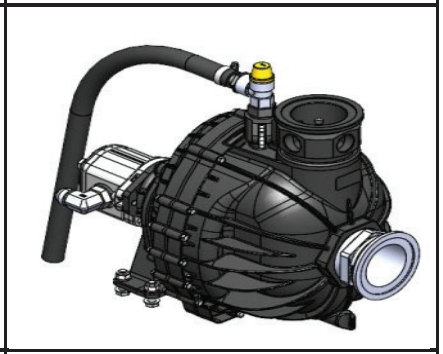
GA1000058	DFO, HYDRUALIC JACK, SERIES 2 PRO	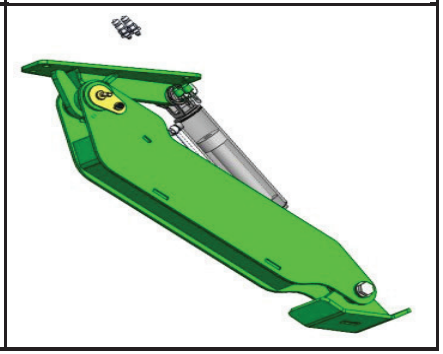

03 - Chassis

Chassis, 5000L, 6500L, 8500L & 10,000L

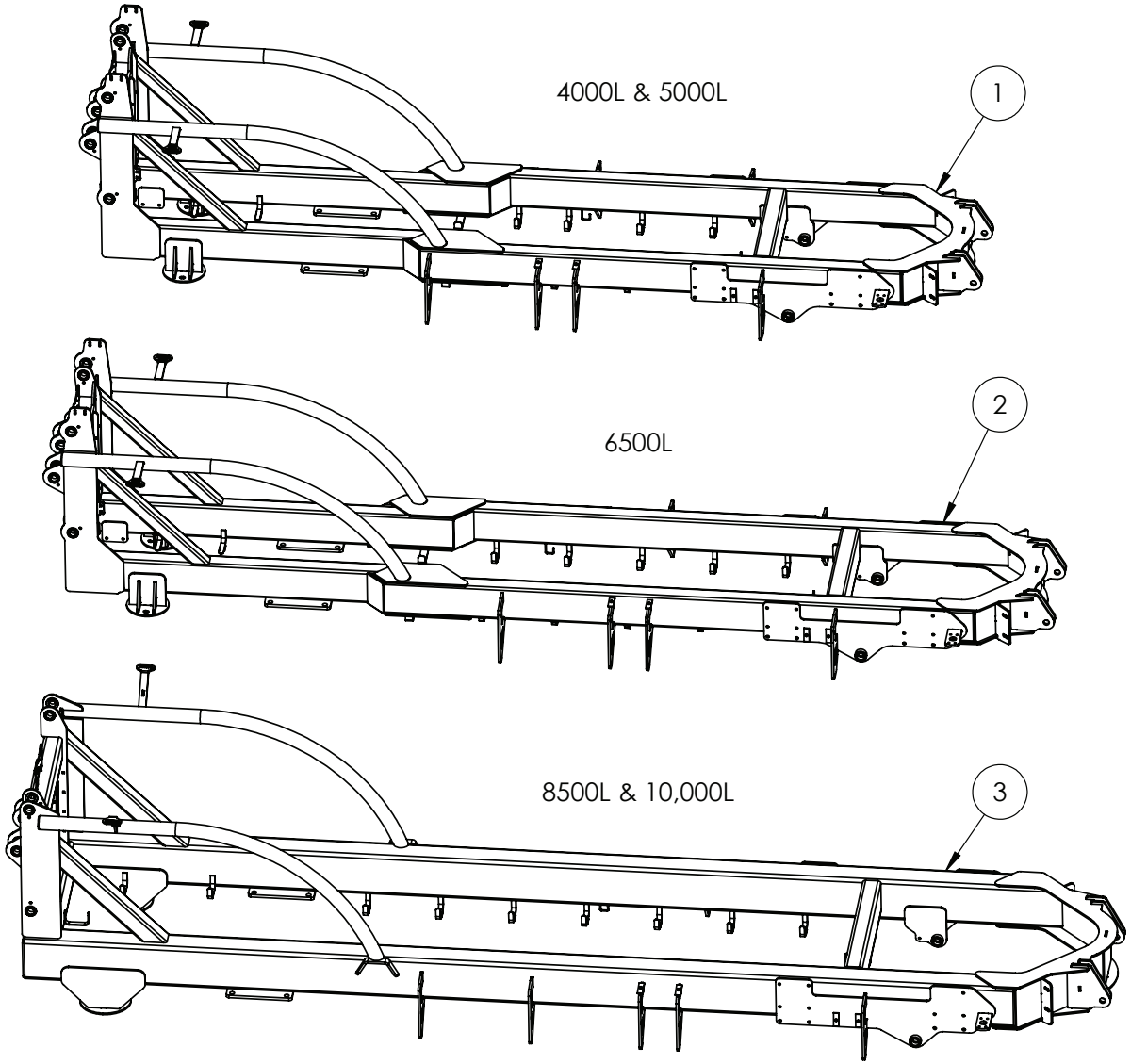

IF DESCRIPTION PREFIX IS ASSEMBLY DRAWING ONLY OR PRODUCTION DRAWING ONLY THE ITEM IS NOT FOR SALE			
ITEM	PART NUMBER	DESCRIPTION	QTY
1	GA4602965	CHASSIS, 4000/5000L, LF TRAILING	1
2	GA4602970	CHASSIS, 6500L, LF TRAILING	1
3	GA4602980	CHASSIS, 8500/10,000L, LF TRAILING	1
GA7800036 GOLDACRES		CHASSIS, 5000L, 6500L, 8500L & 10,000L	REV 00

Hydraulic Lift, Accumulator Manifold Mounting

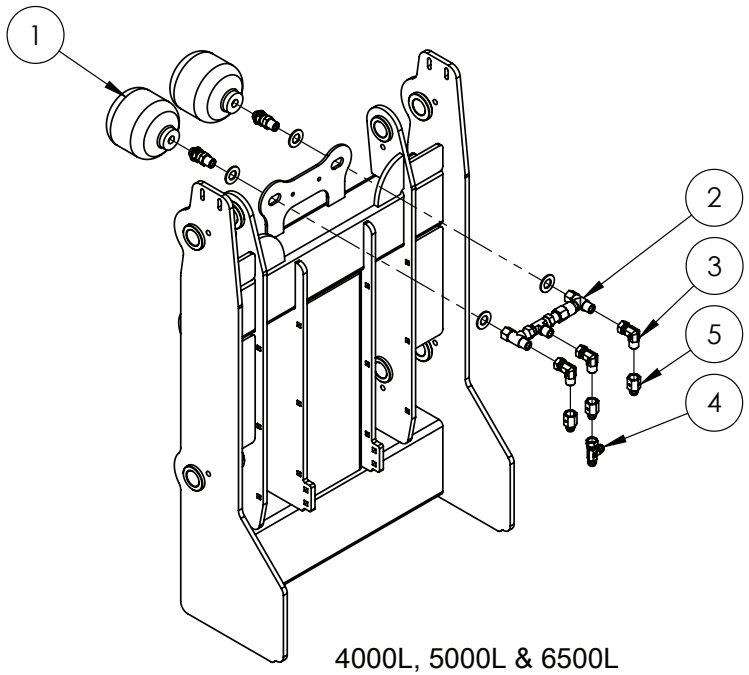

4000L, 5000L & 6500L

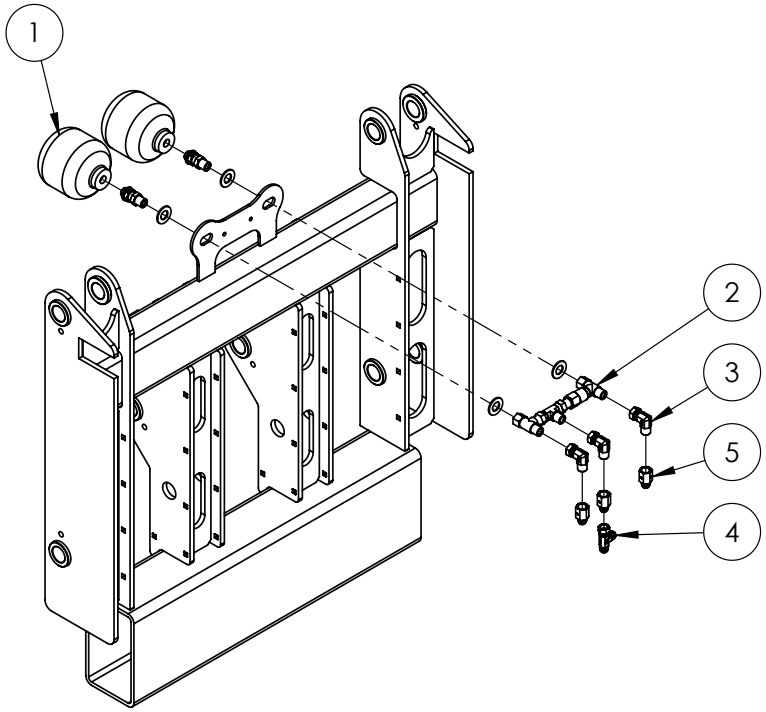

8500L & 10,000L

IF DESCRIPTION PREFIX IS ASSEMBLY DRAWING ONLY OR PRODUCTION DRAWING ONLY THE ITEM IS NOT FOR SALE			
ITEM	PART NUMBER	DESCRIPTION	QTY
1	GA5007787	ACCUMULATOR 1.0L PRECHARGE 70 BAR	2
2	GA4903058	HYDRAULIC ACCUMULATOR MANIFOLD	1
3	GA3500333	HYDRAULIC ADAPTER, ELBOW, 90 DEGREE, 1/2" MALE X 1/2" FEMALE SWIVEL	3
4	GA3500790	HYDRAULIC ADAPTER, TEE, 3/4" JIC MALE X 3/4" JIC MALE X 3/4" JIC FEMALE SWIVEL , S67-121212	1
5	GA3501291	HYDRAULIC ADAPTOR, 1/2" BSPT FEMALE TO 3/4" JIC MALE, S16-0812	3
GA7800133 GOLDACRES		ASSEMBLY DRAWING ONLY. LIFT ACCUMULATORS, LF PRAIRIE SPECIAL S2 MY23	REV 01.B

Hydraulic Accumulator Manifold

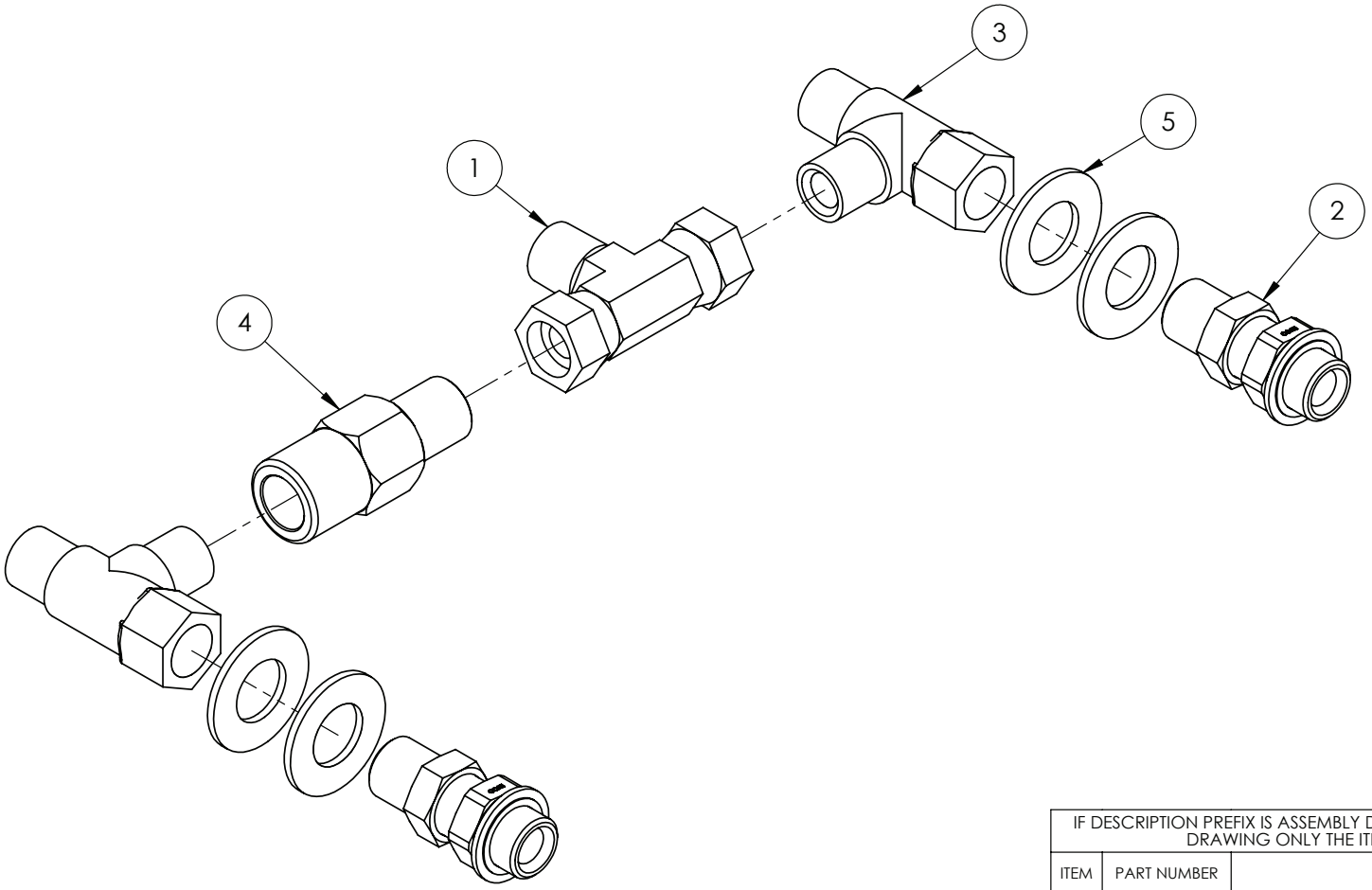

IF DESCRIPTION PREFIX IS ASSEMBLY DRAWING ONLY OR PRODUCTION DRAWING ONLY THE ITEM IS NOT FOR SALE			
ITEM	PART NUMBER	DESCRIPTION	QTY
1	GA3500336	1/2" HYDRAULIC TEE - S83-080808	1
2	GAS99-603	HYDRAULIC ADAPTOR, NIPPLE, 1/2" BSP MALE X 1/2" BSP MALE	2
3	GA3500200	HYDRAULIC ADAPTOR, TEE, 1/2" BSPT MALE X 1/2" BSPT MALE X 1/2" BSPP FEMALE SWIVEL	2
4	GA4572110	PRAIRIE HYD FITTING SUIT ACCUMULATOR	1
5	GA5001045	WASHER, 3/4" FLAT, HD ZP	4
GA4903058 GOLDACRES		HYDRAULIC ACCUMULATOR MANIFOLD	REV 02

Chassis Pull and Hydraulic Filter Mounting

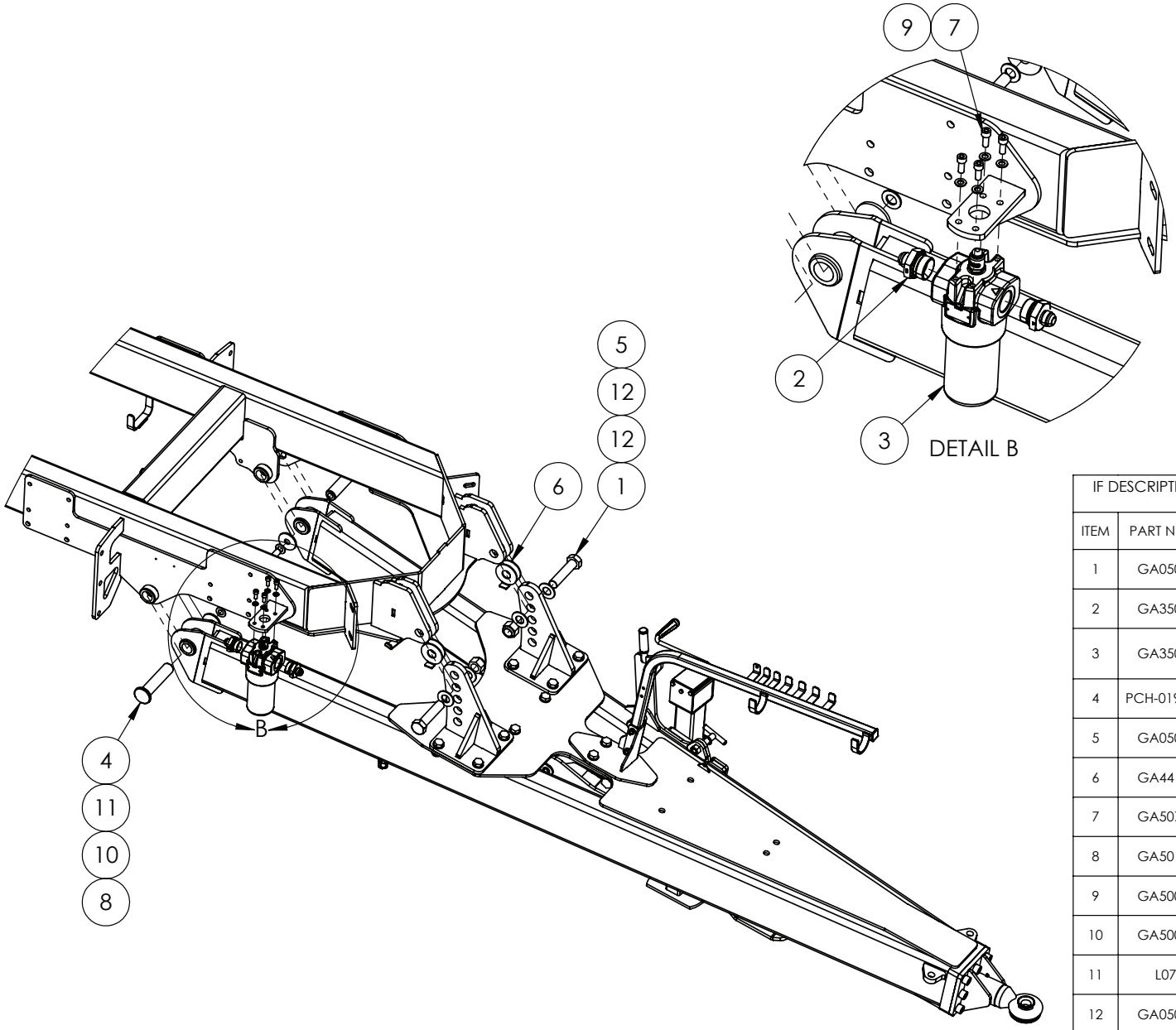

IF DESCRIPTION PREFIX IS ASSEMBLY DRAWING ONLY OR PRODUCTION DRAWING ONLY THE ITEM IS NOT FOR SALE			
ITEM	PART NUMBER	DESCRIPTION	QTY
1	GA0500073	BOLT, 1 1/4" X 5 1/2" UNC, ZP, GR8	2
2	GA3500867	HYDRAULIC ADAPTOR, NIPPLE, 1-1/4" BSPP O-RING MALE X 1-1/16" JIC MALE, S74-2017	2
3	GA3500939	HYDRAULIC PRESSURE FILTER, 10 MICRON, 4 BOLT FLANGE MOUNT, MANUAL CLOGGING INDICATOR, HYDAC	1
4	PCH-019MACH	LARGE CHASSIS PIN	2
5	GA0500071	NUT 1 1/4", NYLOC, ZP, UNC	2
6	GA4411730	PLATE, MID MOUNT SPACER, PRAIRIE PRO, 2021	4
7	GA5071085	SHCS M10 X 25 GR12.9 ZP	4
8	GA5011321	SET SCREW M20 COURSE X 50 GR8.8 ZP	2
9	GA5000117	WASHER 10mm FLAT SS HD	4
10	GA5001741	WASHER 20mm FLAT SS HD	2
11	L073A	WASHER SUIT DRAWBAR PIN	2
12	GA0500072	WASHER, 1 1/4", FLAT, OD 66 X ID 33.3 X 5mm, ZP	4
GA7800034 GOLDACRES		CHASSIS, 6500L, PRAIRIE PRO, 2021	REV 00

Chassis Pull, 5000L & 6500L

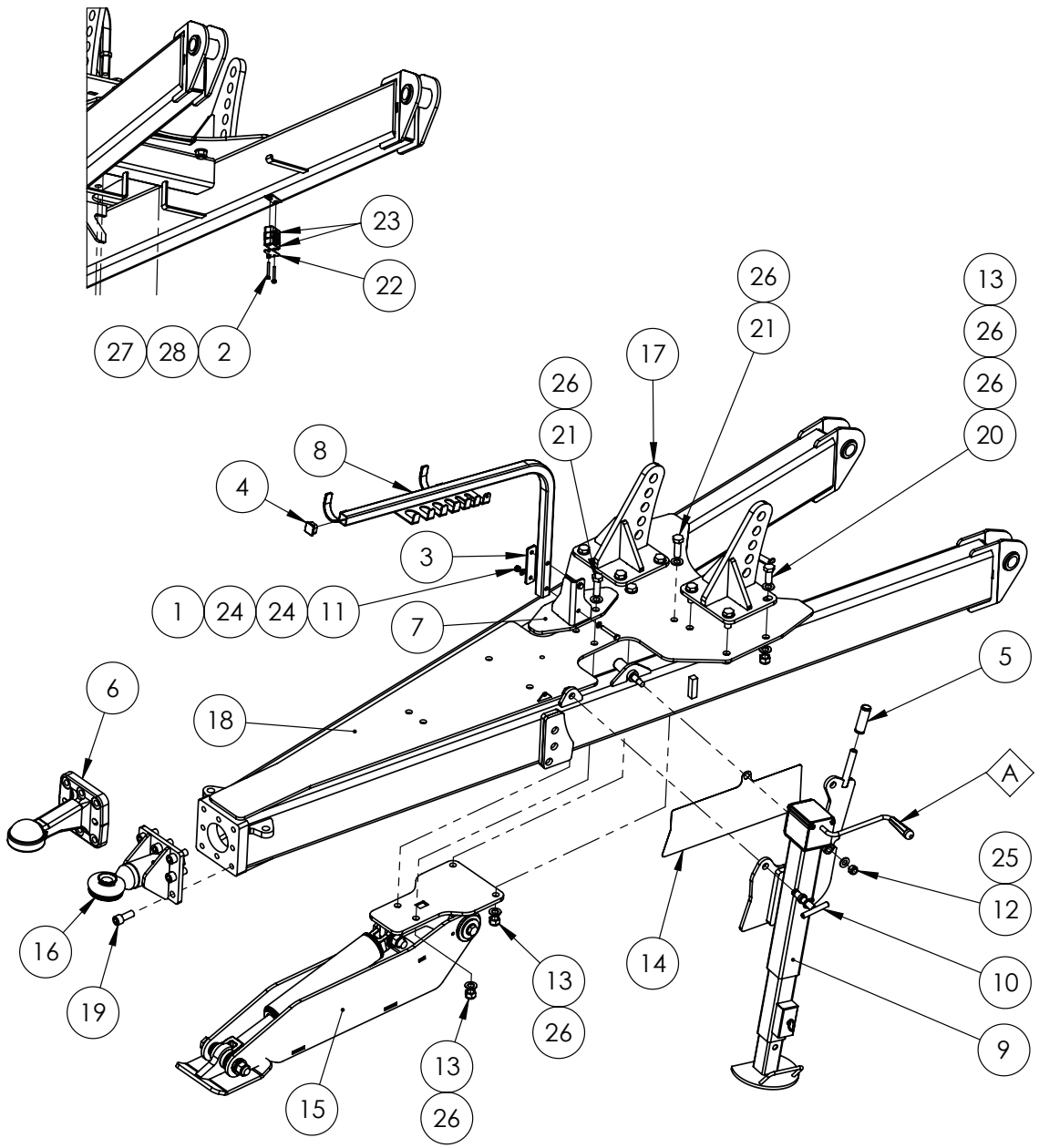

REPLACEMENT PARTS			
ITEM	PART NUMBER	DESCRIPTION	QTY
A	GA5078885	HANDLE, MANUAL 3 TONNE JACK, PLASTIC	1

IF DESCRIPTION PREFIX IS ASSEMBLY DRAWING ONLY OR PRODUCTION DRAWING ONLY THE ITEM IS NOT FOR SALE			
ITEM	PART NUMBER	DESCRIPTION	QTY
1	GA5011163	BOLT M10 X 70 GR8.8 ZP	2
2	GA5004091	BOLT M6 X 50 GR8.8 ZP	2
3	GA4522926	EF PULL HOSE SUPPORT BACKING PLATE	1
4	GA5002911	END CAP, PLASTIC, BLACK, INSERT, RHS. 35 X 35, 1.0 - 3.0mm WALL	1
5	GA5066700	HANDLE BAR GRIP SUIT JACK HANDLE BLACK	1
6	GA5078660	HITCH BALL CUP, K80	1
7	GA4604785	HOSE ARM BRACKET, PULL, PRAIRIE PRO, MY24	1
8	GA4657665	HOSE SUPPORT ARM SUIT EF PULL	1
9	GA4656436	JACK PRAIRIE ADVANCE 08	1
10	GA4656437	JACK PRAIRIE ADVANCE 08 T BOLT	1
11	GA5000141	NUT M10 NYLOC ZP	2
12	GA5001029	NUT M16 NYLOC ZP	1
13	GA5048125	NUT M20 NYLOC COARSE ZP	12
14	GA4522297	PRAIRIE EF JACK WEAR PLATE	1
15	GA4951310	PRODUCTION DRAWING ONLY, HYDRAULIC JACK, 5000 TO 10000L PRAIRIE PRO, MY21	1
16	GA4951180	PRODUCTION DRAWING ONLY, TOW EYE SUB ASSEMBLY, PRAIRIE PRO, 2021	1
17	GA4602995	PULL, MID MOUNT BRACKET, PRAIRIE PRO, 2021	2
18	GA4602985	PULL, 5000L AND 6500L, PRAIRIE PRO, 2021	1
19	GA0500028	SHCS, M20 X 50, ZP GR12.9	8
20	GA5011321	SET SCREW M20 X 50 GR8.8 ZP	8
21	GA5001557	SET SCREW M20 X 60 ZP GR8.8	4
22	GA5024110	SINGLE CLAMP PLATE TOP GR4	1
23	GA5024115	SINGLE CLAMP RIBBED JAW 28mm GR4	2
24	GA5000117	WASHER 10mm FLAT SS HD	4
25	GA5001043	WASHER 16mm FLAT SS HD	1
26	GA5001741	WASHER 20mm FLAT SS HD	24
27	GA5004437	WASHER 6mm FLAT SS	2
28	GA5004447	WASHER 6mm SPRING SS	2
GA6101010 GOLDACRES	PULL ASSEMBLY, 5000 & 6500L, PRAIRIE PRO, MY21, CONFIGURABLE		REV 02.A

Chassis Pull, 8500L & 10,000L

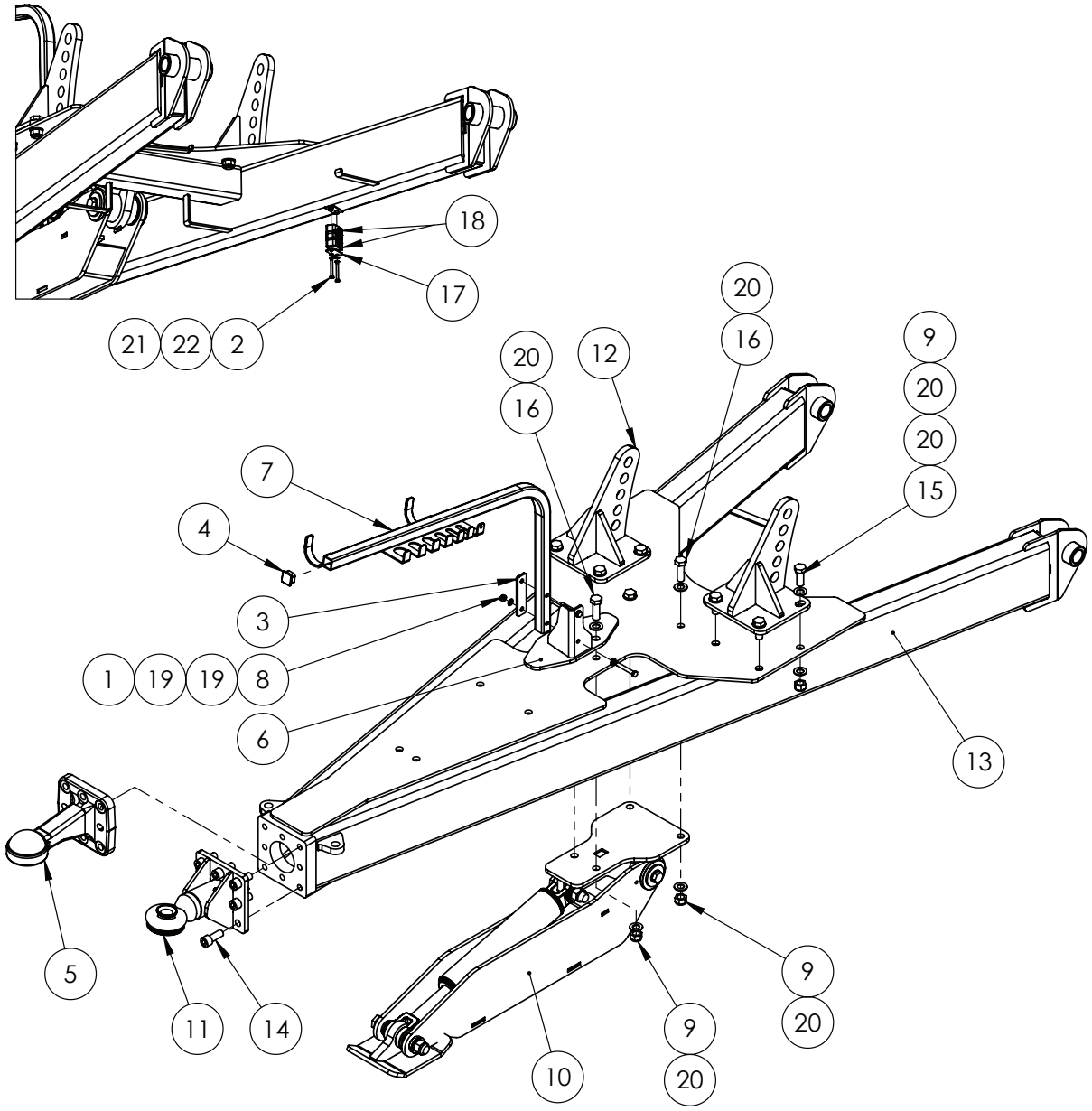

IF DESCRIPTION PREFIX IS ASSEMBLY DRAWING ONLY OR PRODUCTION DRAWING ONLY THE ITEM IS NOT FOR SALE			
ITEM	PART NUMBER	DESCRIPTION	QTY
1	GA5011163	BOLT M10 X 70 GR8.8 ZP	2
2	GA5004091	BOLT M6 X 50 GR8.8 ZP	2
3	GA4522926	EF PULL HOSE SUPPORT BACKING PLATE	1
4	GA5002911	END CAP, PLASTIC, BLACK, INSERT, RHS. 35 X 35, 1.0 - 3.0mm WALL	1
5	GA5078660	HITCH BALL CUP, K80	1
6	GA4604785	HOSE ARM BRACKET, PULL, PRAIRIE PRO, MY24	1
7	GA4657665	HOSE SUPPORT ARM SUIT EF PULL	1
8	GA5000141	NUT M10 NYLOC ZP	2
9	GA5048125	NUT M20 NYLOC COARSE ZP	12
10	GA4951310	PRODUCTION DRAWING ONLY, HYDRAULIC JACK, 5000 TO 10000L PRAIRIE PRO, MY21	1
11	GA4951180	PRODUCTION DRAWING ONLY, TOW EYE SUB ASSEMBLY, PRAIRIE PRO, 2021	1
12	GA4602995	PULL, MID MOUNT BRACKET, PRAIRIE PRO, 2021	2
13	GA4602990	PULL, 8500L AND 10000L, PRAIRIE PRO, 2021	1
14	GA0500028	SHCS, M20 X 50, ZP GR12.9	8
15	GA5011321	SET SCREW M20 X 50 GR8.8 ZP	8
16	GA5001557	SET SCREW M20 X 60 ZP GR8.8	4
17	GA5024110	SINGLE CLAMP PLATE TOP GR4	1
18	GA5024115	SINGLE CLAMP RIBBED JAW 28mm GR4	2
19	GA5000117	WASHER 10mm FLAT SS HD	4
20	GA5001741	WASHER 20mm FLAT SS HD	24
21	GA5004437	WASHER 6mm FLAT SS	2
22	GA5004447	WASHER 6mm SPRING SS	2
GA6101020 GOLDACRES	PULL ASSEMBLY, 8500 & 10,000L, PRAIRIE PRO, 2021, CONFIGURABLE		REV 02.A

Hydraulic Jack

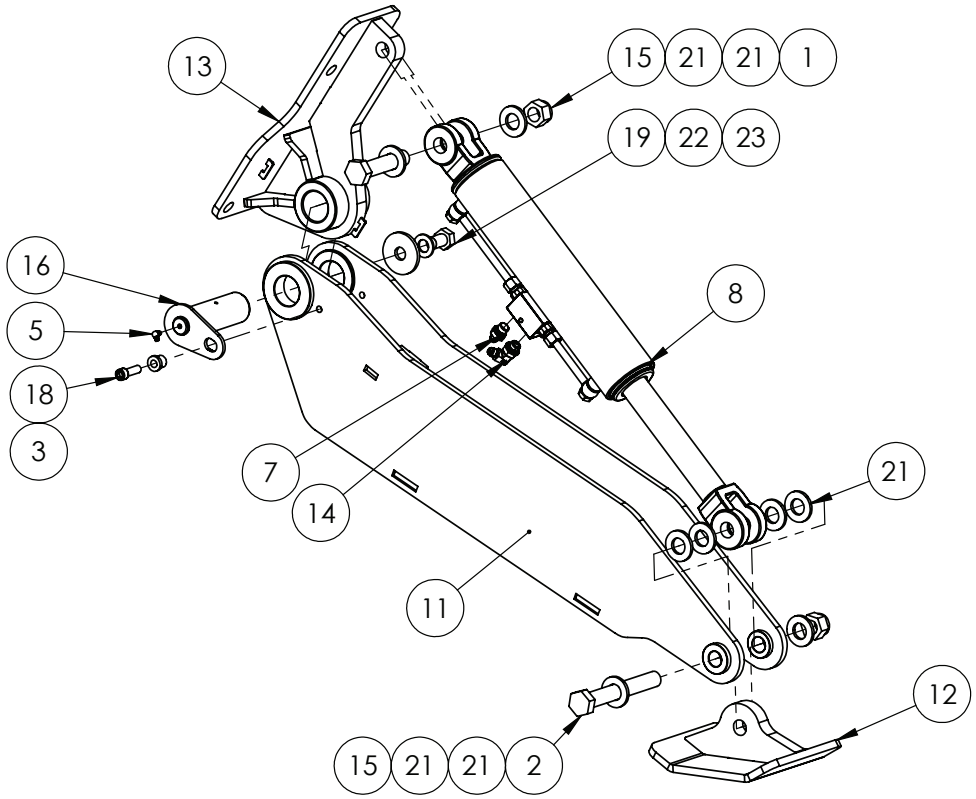

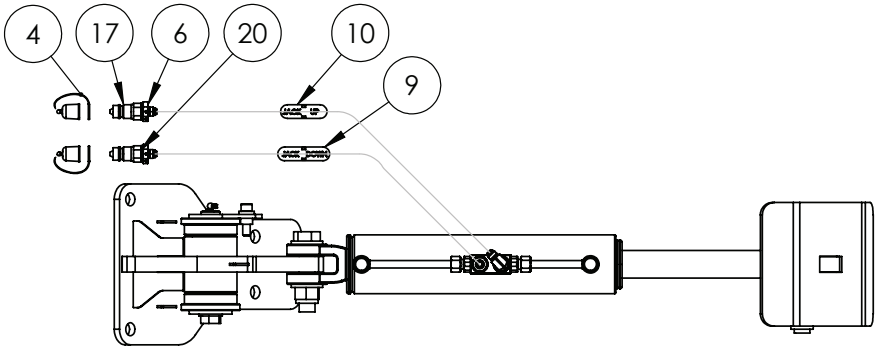

IF DESCRIPTION PREFIX IS ASSEMBLY DRAWING ONLY OR PRODUCTION DRAWING ONLY THE ITEM IS NOT FOR SALE			
ITEM	PART NUMBER	DESCRIPTION	QTY
1	GA5006149	BOLT 1 UNC X 4 1/2 GR8 ZP	1
2	GA5006037	BOLT 1" X 7.5" UNC GR8 ZP	1
3	MACH0152	BUSH WITH SHOULDER, 12.3 ID X 25 OD X 21 LONG, SUIT PARALIFT PIN BOLTS	1
4	GA5052365	COVER, GREEN PLASTIC, SUIT HYDRAULIC QUICK CONNECT FITTING R81-08M	2
5	GA5051970	GREASE NIPPLE, 6mm, 90 DEG	1
6	GA3500718	HYDRAULIC ADAPTOR NIPPLE, 1/2" BSPP TO 9/16" JIC	1
7	GA3500145	HYDRAULIC ADAPTOR, 3/8" BSPPOM, 9/16" JICM, NIPPLE, S74-0609, RYCO	1
8	GA3501663	HYDRAULIC CYLINDER, BORE 3.25", ROD 1.75", STROKE 12", CLEVIS ENDS, DOUBLE PILOT CHECK VALVE	1
9	GA4410610	HYDRAULIC HOSE ID TAG, JACK DOWN	1
10	GA4410610	HYDRAULIC HOSE ID TAG, JACK UP	1
11	GA4603315	HYDRAULIC JACK ARM, REAR PIVOT, PULL, PRAIRIE PRO, S2	1
12	GA4603320	HYDRAULIC JACK FOOT, REAR PIVOT, PULL, PRAIRIE PRO, 2021	1
13	GA4603310	HYDRAULIC JACK MOUNT, REAR PIVOT, PULL, PRAIRIE PRO, S2	1
14	GA3500319	HYDRAULIC ADAPTOR, ELBOW, 90 DEGREE, 9/16" JIC MALE X 3/8" BSPP MALE O-RING, S76-0609	1
15	GA5012439	NUT 1" NYLOC UNC ZP	2
16	GA4603295	PIN, HYDRAULIC JACK PIVOT, 50mm OD, FABRICATED, PRAIRIE PRO, 2021	1
17	GA5078000	QUICK CONNECT FITTING, 1/2" MALE TIP X 1/2" FEMALE THREAD, R81-08M	1
18	GA5000321	SHCS M12 X 40 GR12.9 ZP	1
19	GA5011323	SET SCREW M20 X 30 GR8.8 ZP	1
20	GA4951290	SUB ASSEMBLY, REMOTE FITTINGS, 0.5mm ORIFICE, HYDRAULIC JACK RETURN, PRAIRIE PRO S2	1
21	GA5017659	WASHER 1 FLAT ZP HD (5mm THICK)	8
22	GA5001741	WASHER 20mm FLAT SS HD	1
23	L073A	WASHER SUIT DRAWBAR PIN	1
GA4951310 GOLDACRES		PRODUCTION DRAWING ONLY, HYDRAULIC JACK, 5000 TO 10000L PRAIRIE PRO, MY21	REV 01

Tow Eye Assembly

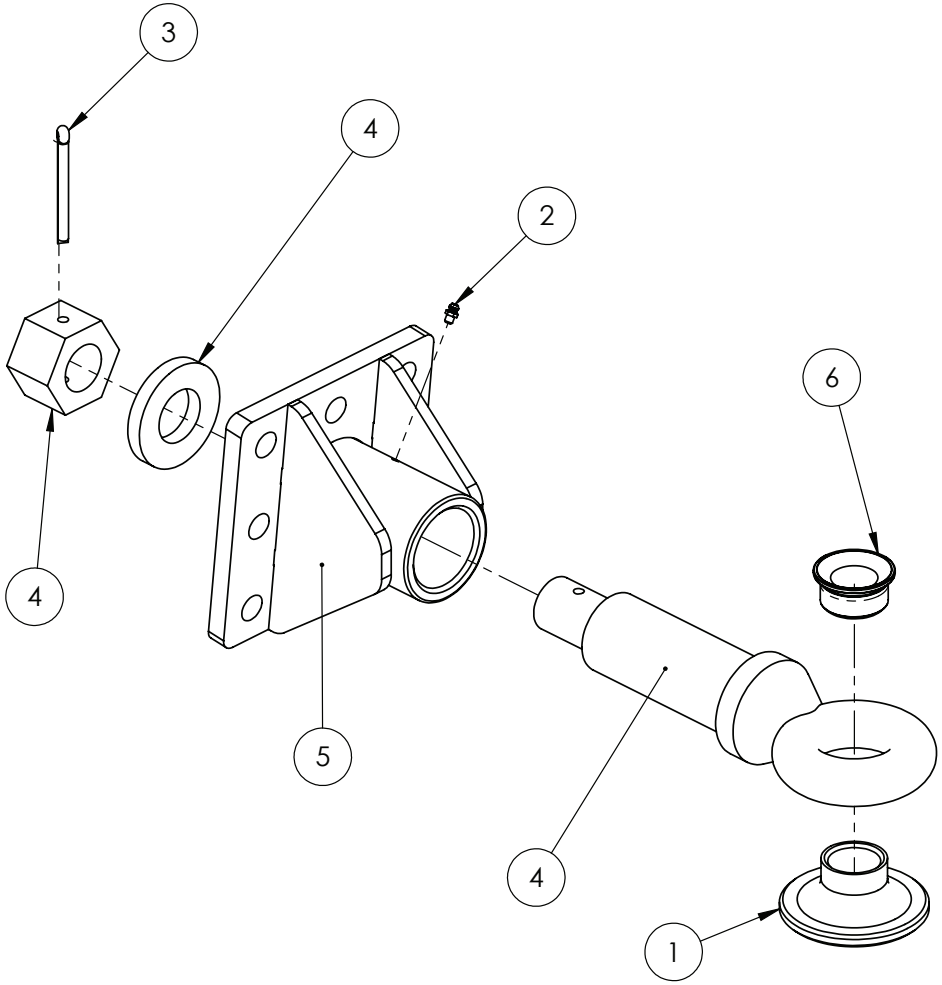

IF DESCRIPTION PREFIX IS ASSEMBLY DRAWING ONLY OR PRODUCTION DRAWING ONLY THE ITEM IS NOT FOR SALE			
ITEM	PART NUMBER	DESCRIPTION	QTY
1	GA4551710	BUSH, TOW EYE INSERT, WIDE BASE, 39mm ID	1
2	GA5050450	GREASE NIPPLE, 6mm	1
3	GA5051385	SPLIT PIN M8 X 90mm	1
4	GA5016243	SWIVEL TOW EYE (MINUS BUSH)	1
5	GA4603000	TOW EYE HOUSING, SWIVEL, PULL, PRAIRIE PRO, 2021	1
6	GA5075075	TOWING EYE BUSH ID 35mm OD 50mm	1
GA4951180 GOLDACRES		PRODUCTION DRAWING ONLY, TOW EYE SUB ASSEMBLY, PRAIRIE PRO, 2021	REV 00

Pump Guard, Long, 5000L

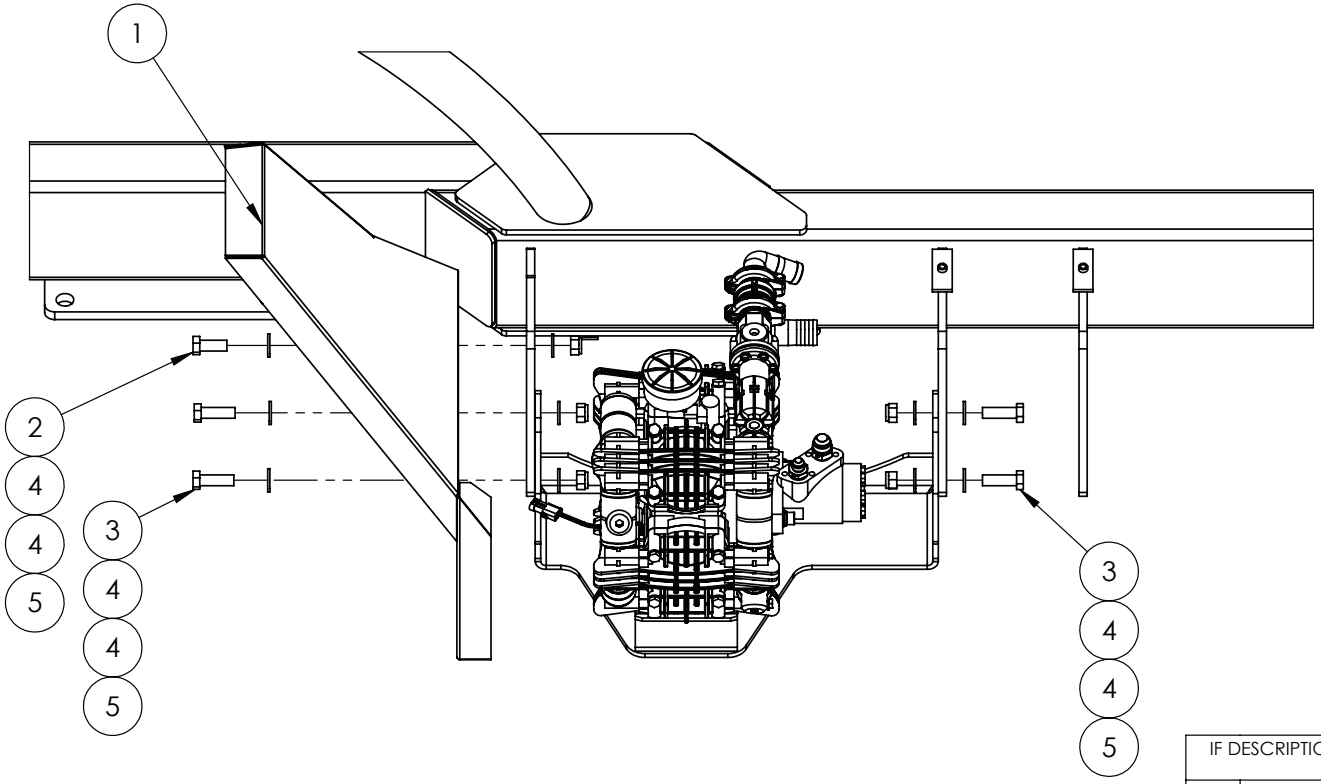

IF DESCRIPTION PREFIX IS ASSEMBLY DRAWING ONLY OR PRODUCTION DRAWING ONLY THE ITEM IS NOT FOR SALE			
ITEM	PART NUMBER	DESCRIPTION	QTY
1	GA4412565	PLATE, PUMP GUARD LONG, PRAIRIE PRO, S2	1
2	GA5011287	SET SCREW M16 X 40 GR 8.8 ZP	1
3	GA5000933	SET SCREW M16 X 50 GR8.8 ZP	4
4	GA5001043	WASHER 16mm FLAT SS HD	10
5	GA5001029	NUT M16 NYLOC ZP	5
GA7800087 GOLDACRES		PUMP GUARD, LONG, 5000L	REV 00

Pump Guard Short, 6500L

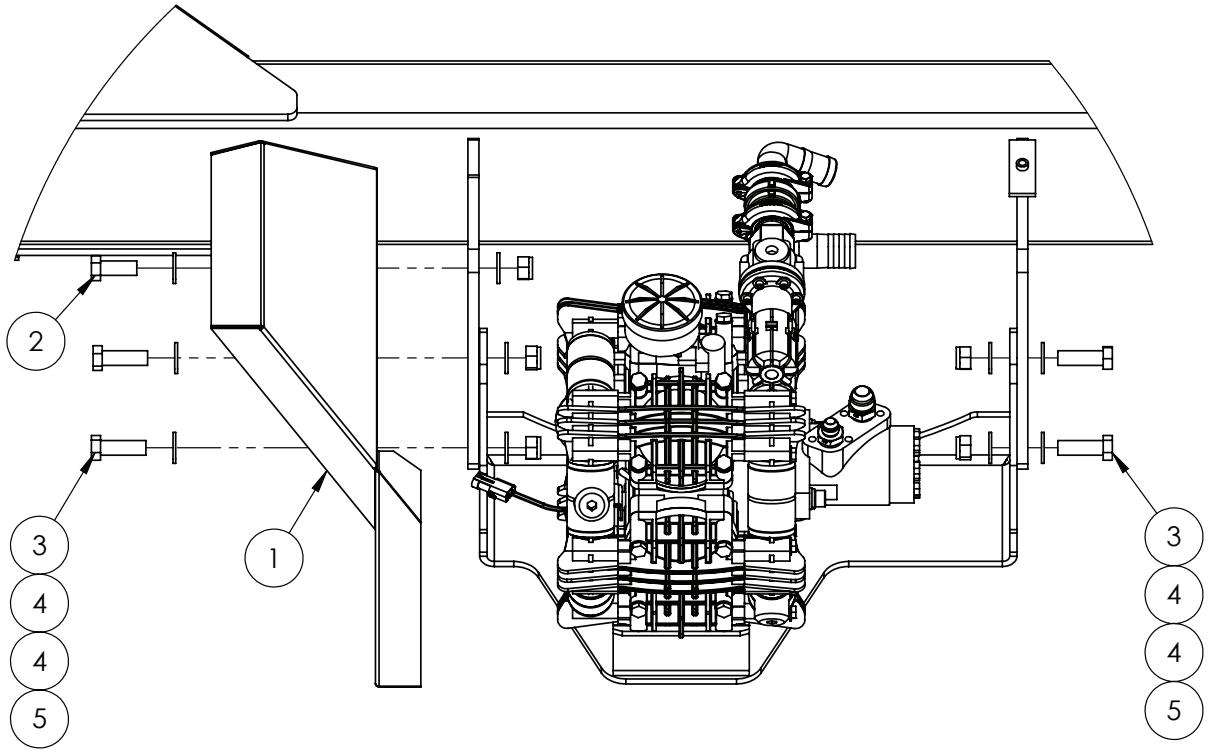

IF DESCRIPTION PREFIX IS ASSEMBLY DRAWING ONLY OR PRODUCTION DRAWING ONLY THE ITEM IS NOT FOR SALE			
ITEM	PART NUMBER	DESCRIPTION	QTY
1	GA4412560	PLATE, PUMP GUARD SHORT, PRAIRIE PRO, S2	1
2	GA5011287	SET SCREW M16 X 40 GR 8.8 ZP	1
3	GA5000933	SET SCREW M16 X 50 GR8.8 ZP	4
4	GA5001043	WASHER 16mm FLAT SS HD	10
5	GA5001029	NUT M16 NYLOC ZP	5
GA7800088 GOLDACRES		PUMP GUARD, SHORT, 6500L	REV 00

Pump Guard, Zeta 260, 8500L

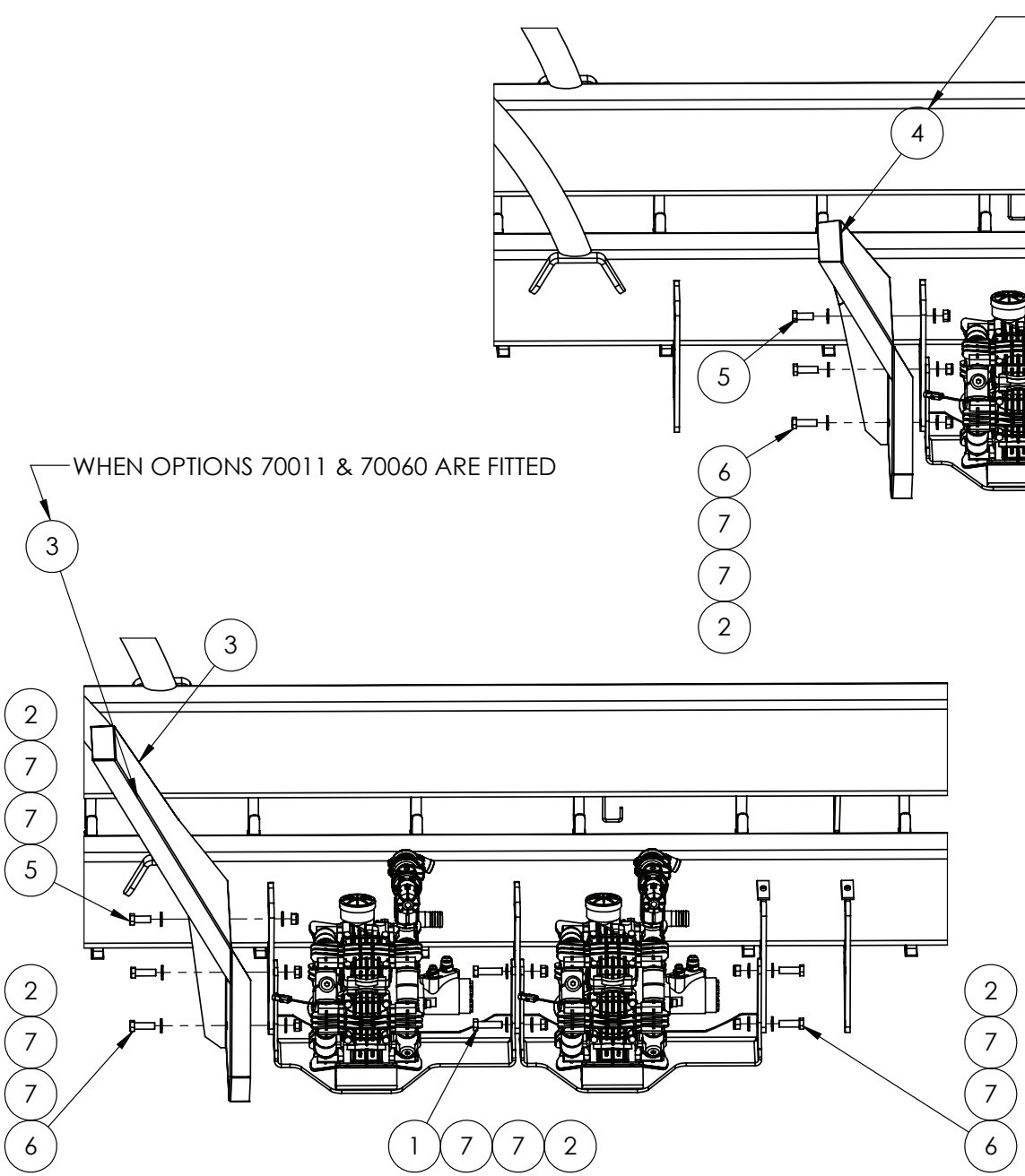

IF DESCRIPTION PREFIX IS ASSEMBLY DRAWING ONLY OR PRODUCTION DRAWING ONLY THE ITEM IS NOT FOR SALE			
ITEM	PART NUMBER	DESCRIPTION	QTY
1	GA5000941	BOLT M16 X 60 GR8.8 ZP	2
2	GA5001029	NUT M16 NYLOC ZP	12
3	GA4412565	PLATE, PUMP GUARD LONG, PRAIRIE PRO, S2	1
4	GA4412560	PLATE, PUMP GUARD SHORT, PRAIRIE PRO, S2	1
5	GA5011287	SET SCREW M16 X 40 GR 8.8 ZP	2
6	GA5000933	SET SCREW M16 X 50 GR8.8 ZP	8
7	GA5001043	WASHER 16mm FLAT SS HD	24
GA7800089 GOLDACRES		PUMP GUARD, ZETA 260, 8500L	REV 00

Pump Guard, ARAG MSP400, 8500L & 10,000L

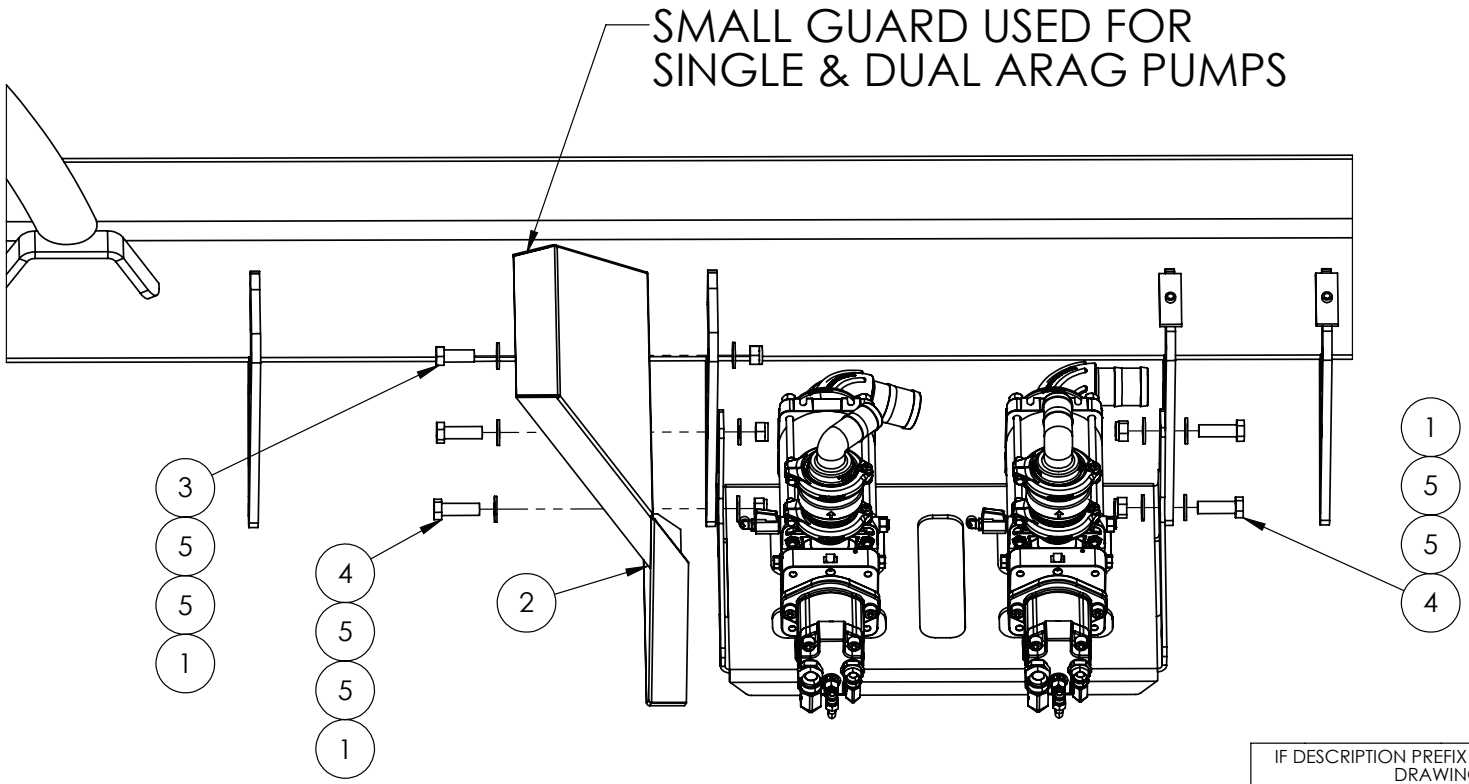

8500L OPTIONED WITH 70012 & 70060

IF DESCRIPTION PREFIX IS ASSEMBLY DRAWING ONLY OR PRODUCTION DRAWING ONLY THE ITEM IS NOT FOR SALE			
ITEM	PART NUMBER	DESCRIPTION	QTY
1	GA5001029	NUT M16 NYLOC ZP	5
2	GA4412560	PLATE, PUMP GUARD SHORT, PRAIRIE PRO, S2	1
3	GA5011287	SET SCREW M16 X 40 GR 8.8 ZP	1
4	GA5000933	SET SCREW M16 X 50 GR8.8 ZP	4
5	GA5001043	WASHER 16mm FLAT SS HD	10
GA7800090 GOLDACRES		PUMP GUARD, ARAG MSP400, 8500L & 10,000L	REV 00

Pump Guard, Zeta 260, 8500L & 10,000L, with Agitation Pump

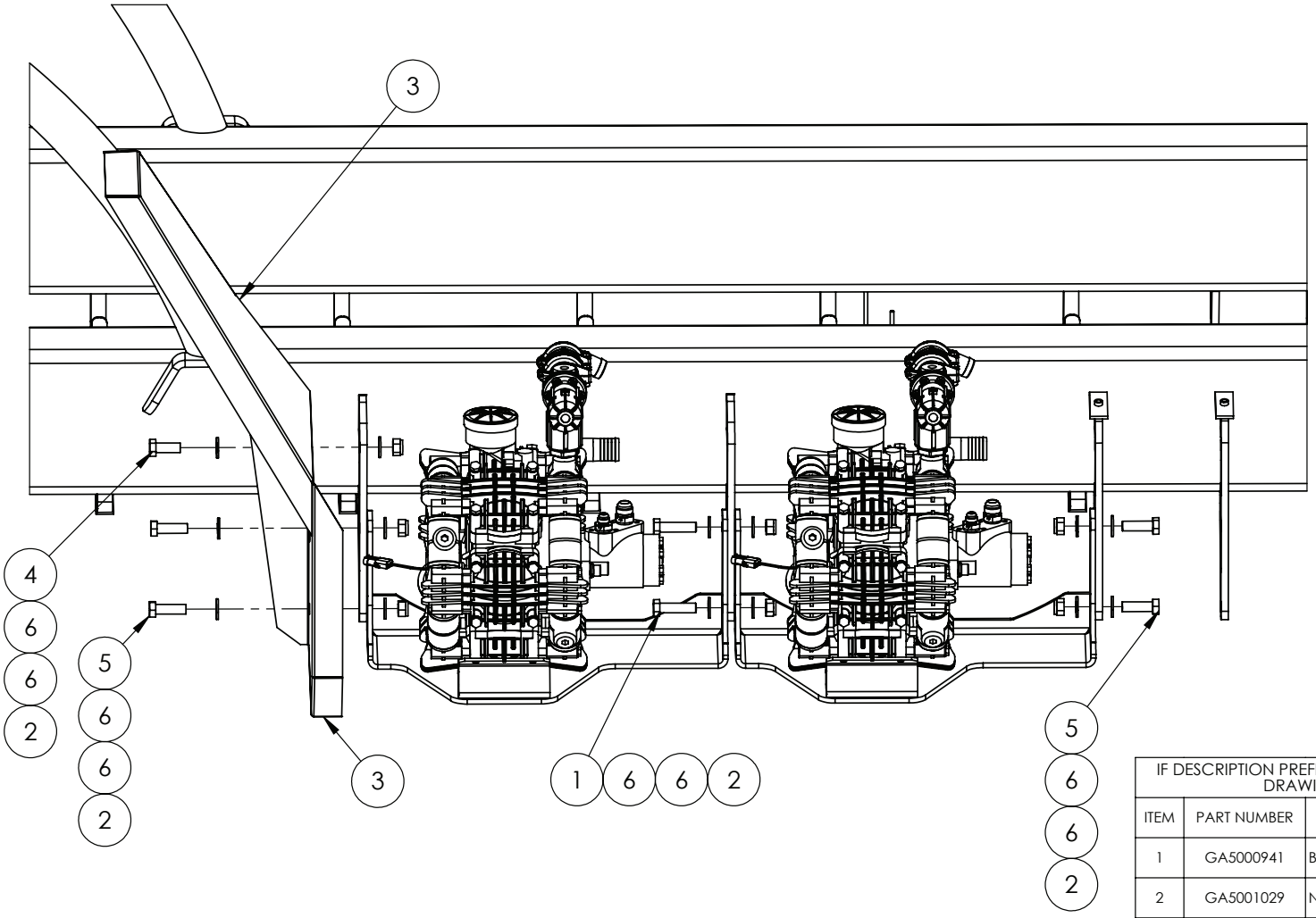

PLATE, PUMP GUARD, ZETA 260, 10,000L

IF DESCRIPTION PREFIX IS ASSEMBLY DRAWING ONLY OR PRODUCTION DRAWING ONLY THE ITEM IS NOT FOR SALE			
ITEM	PART NUMBER	DESCRIPTION	QTY
1	GA5000941	BOLT M16 X 60 GR8.8 ZP	2
2	GA5001029	NUT M16 NYLOC ZP	7
3	GA4412565	PLATE, PUMP GUARD LONG, PRAIRIE PRO, S2	1
4	GA5011287	SET SCREW M16 X 40 GR 8.8 ZP	1
5	GA5000933	SET SCREW M16 X 50 GR8.8 ZP	4
6	GA5001043	WASHER 16mm FLAT SS HD	14
GA7800091 GOLDACRES		PUMP GUARD, ZETA 260, 8500L & 10,000L, WITH AGITATION	REV 00

Mounting Assembly, Diaphragm Pump, UDOR, Zeta 260

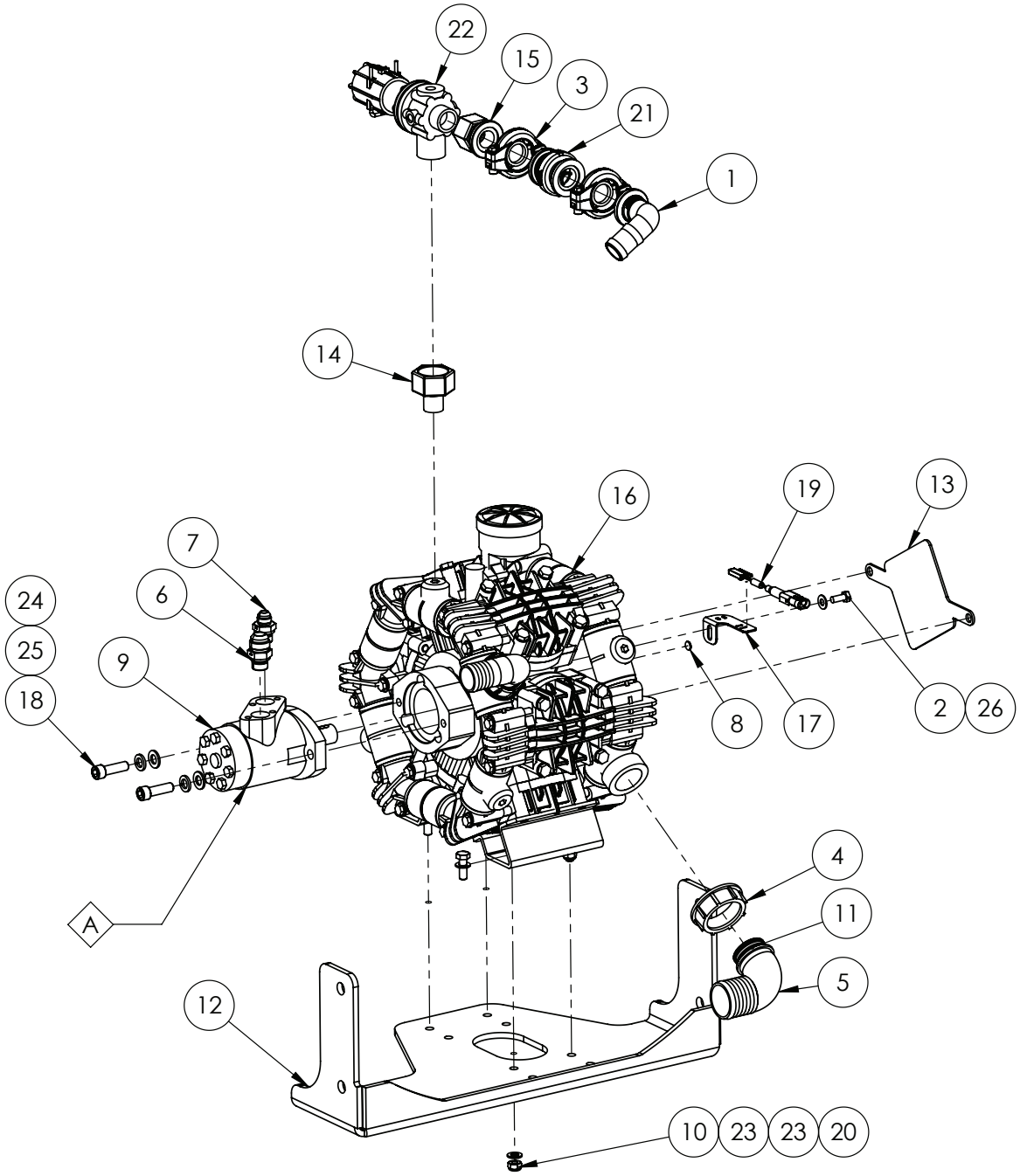

REPLACEMENT PARTS			
ITEM	PART NUMBER	DESCRIPTION	QTY
A	GA5023115	SEAL KIT, 60CC & 80CC HYDRAULIC MOTOR, GA5009525 AND GA5047515	-

IF DESCRIPTION PREFIX IS ASSEMBLY DRAWING ONLY OR PRODUCTION DRAWING ONLY THE ITEM IS NOT FOR SALE			
ITEM	PART NUMBER	DESCRIPTION	QTY
1	GA5077807	1" FLANGE X 1 1/4" BARB, ELBOW, 90 DEGREE, M100125BRB90	1
2	GA5052595	BOLT M8 X 20 SS A270	1
3	GA2000113	FLANGE CLAMP, AND GASKET, 1", SERIES 100, HYPRO	2
4	GA5076605	FLY NUT, 2", ARAG, 2002070	1
5	GA5076262	HOSE BARB, ELBOW, 90 DEGREE, 2" FLY NUT END X 52 mm HOSE, ARAG, 116752	1
6	GA3500720	HYDRAULIC ADAPTER, NIPPLE, 1/2" BSPP O-RING MALE X 1 1/16" JIC MALE, S74-0817	1
7	GA3500303	HYDRAULIC ADAPTER, NIPPLE, 1/2" BSPP O-RING MALE X 3/4" JIC MALE, S74-0812	1
8	GA5016169	MAGNET, HIGH STRENGTH, 12mm DIAMETER X 1.5mm THICK	1
9	GA5047515	MOTOR, HYDRAULIC, 80CC/REV, 25.4mm SHAFT, SUIT SPRAY PUMP DRIVE	1
10	GA5000141	NUT M10 NYLOC ZP	4
11	GA5048385	O RING, 42.5 X 2.62, BS131, SUIT 2" HOSE BARB	1
12	GA4410365	PLATE, PUMP MOUNT BRACKET, PRAIRIE PRO, 2021	1
13	PUMPCOVER250	PLATE, REAR PUMP SHAFT COVER, RO250, ZETA 260 AND 300	1
14	GA4583645	PLUMBING FITTING, 3/4" MALE TO 1 1/4" FEMALE, REDUCING BUSH	1
15	GA5077817	PLUMBING COUPLING, 1" FLANGE X 1" FEMALE THREAD, BANJO	1
16	GA5054500	PUMP ZETA 260 MI-1	1
17	GA4525010	RPM SENSOR MOUNT BRACKET, SUIT UDOR MI PUMP	1
18	GA5000321	SHCS M12 X 40 GR12.9 ZP	2
19	GA5076331	SENSOR, SPRAY PUMP RPM SUIT 440, 450 & G-HUB, RAVEN, 11170171293	1
20	GA5065455	SET SCREW M10 X 30 GR8.8 ZP	4
21	GA5077889	VALVE, CHECK, 1" MANIFOLD, FLANGE, BANJO, MCV100	1
22	GA5075640	VALVE, PRESSURE RELIEF, 15 BAR, 1" MALE THREAD INLET X 1 1/4" MALE THREAD OUTLET, POLMAC	1
23	GA5000117	WASHER 10mm FLAT SS HD	8
24	GA5000577	WASHER 12mm FLAT SS HD	2
25	GA5000575	WASHER 12mm SPRING SS	2
26	GA5003643	WASHER 8mm FLAT SS HD	1
GA4951155 GOLDACRES	PUMP ASSEMBLY, DIAPHRAGM, ZETA 260, PRAIRIE PRO, MY21		REV 02

Mounting Assembly, Diaphragm Pump, UDOR, Zeta 260, with Agitation

REPLACEMENT PARTS			
ITEM	PART NUMBER	DESCRIPTION	QTY
A	GA5023115	SEAL KIT, 60CC & 80CC HYDRAULIC MOTOR, GA5009525 AND GA5047515	-

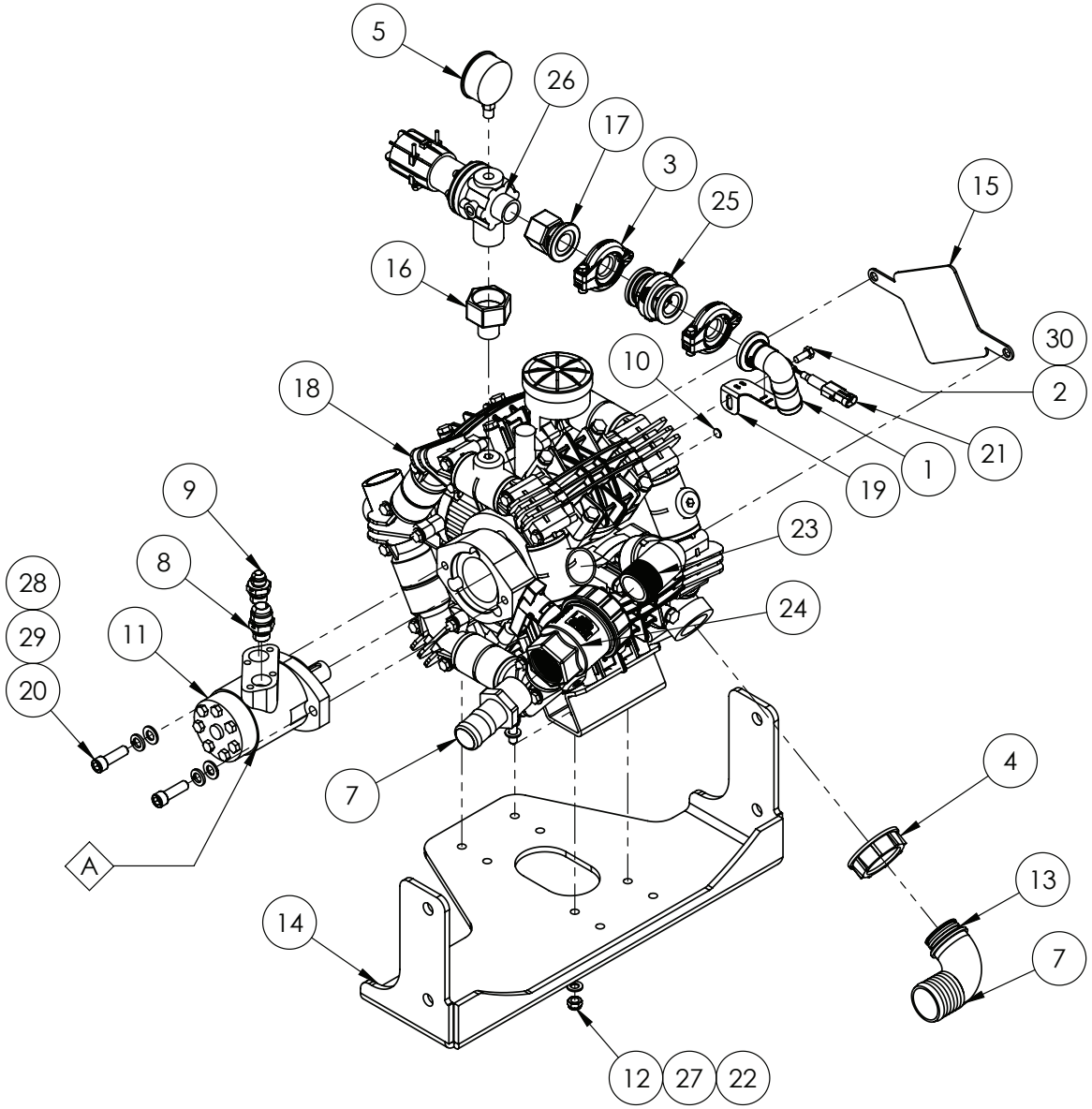

IF DESCRIPTION PREFIX IS ASSEMBLY DRAWING ONLY OR PRODUCTION DRAWING ONLY THE ITEM IS NOT FOR SALE			
ITEM	PART NUMBER	DESCRIPTION	QTY
1	GA5077807	1" FLANGE X 1 1/4" BARB, ELBOW, 90 DEGREE, M100125BRB90	1
2	GA5052595	BOLT M8 X 20 SS A270	1
3	GA2000113	FLANGE CLAMP, AND GASKET, 1", SERIES 100, HYPRO	2
4	GA5076605	FLY NUT, 2", ARAG, 2002070	1
5	GA4948470	GAUGE, PRESSURE, SMALL FACE, 160PSI	1
6	GA5076262	HOSE BARB, ELBOW, 90 DEGREE, 2" FLY NUT END X 52 mm HOSE, ARAG, 116752	1
7	GA5077731	HOSE BARB, STRAIGHT, 1 1/2 MALE THREAD X 1 1/2 HOSE, BANJO	1
8	GA3500720	HYDRAULIC ADAPTER, NIPPLE, 1/2" BSPP O-RING MALE X 1 1/16" JIC MALE, S74-0817	1
9	GA3500303	HYDRAULIC ADAPTER, NIPPLE, 1/2" BSPP O-RING MALE X 3/4" JIC MALE, S74-0812	1
10	GA5016169	MAGNET, HIGH STRENGTH, 12mm DIAMETER X 1.5mm THICK	1
11	GA5047515	MOTOR, HYDRAULIC, 80CC/REV, 25.4mm SHAFT, SUIT SPRAY PUMP DRIVE	1
12	GA5000141	NUT M10 NYLOC ZP	4
13	GA5048385	O RING, 42.5 X 2.62, BS131, SUIT 2" HOSE BARB	1
14	GA4410365	PLATE, PUMP MOUNT BRACKET, PRAIRIE PRO, 2021	1
15	PUMPCOVER250	PLATE, REAR PUMP SHAFT COVER, RO250, ZETA 260 AND 300	1
16	GA4583645	PLUMBING FITTING, 3/4" MALE TO 1 1/4" FEMALE, REDUCING BUSH	1
17	GA5077817	PLUMBING COUPLING, 1" FLANGE X 1" FEMALE THREAD, BANJO	1
18	GA5054500	PUMP ZETA 260 MI-1	1
19	GA4525010	RPM SENSOR MOUNT BRACKET, SUIT UDOR MI PUMP	1
20	GA5000321	SHCS M12 X 40 GR12.9 ZP	2
21	GA5076331	SENSOR, SPRAY PUMP RPM SUIT 440, 450 & G-HUB, RAVEN, 11170171293	1
22	GA5065455	SET SCREW M10 X 30 GR8.8 ZP	4
23	GA5078140	STREET ELBOW, 90 DEGREE, 1 1/2 FEMALE THREAD X 1 1/2 MALE THREAD, BANJO	1
24	GA5078167	VALVE, BALL, 1 1/2 FEMALE THREAD INLET / OUTLET, FULL PORT, LEVER HANDLE, BANJO, UV150FP	1
25	GA5077889	VALVE, CHECK, 1" MANIFOLD, FLANGE, BANJO, MCV100	1
26	GA5075640	VALVE, PRESSURE RELIEF, 15 BAR, 1" MALE THREAD INLET X 1 1/4" MALE THREAD OUTLET, POLMAC	1
27	GA5000117	WASHER 10mm FLAT SS HD	8
28	GA5000577	WASHER 12mm FLAT SS HD	2
29	GA5000575	WASHER 12mm SPRING SS	2
30	GA5003643	WASHER 8mm FLAT SS HD	1
GA4951156 GOLDACRES		AGITATOR PUMP ASSEMBLY, DIAPHRAGM, PRARIE PRO	REV 02

Pump, MSP400 Assembly, Single Mounting

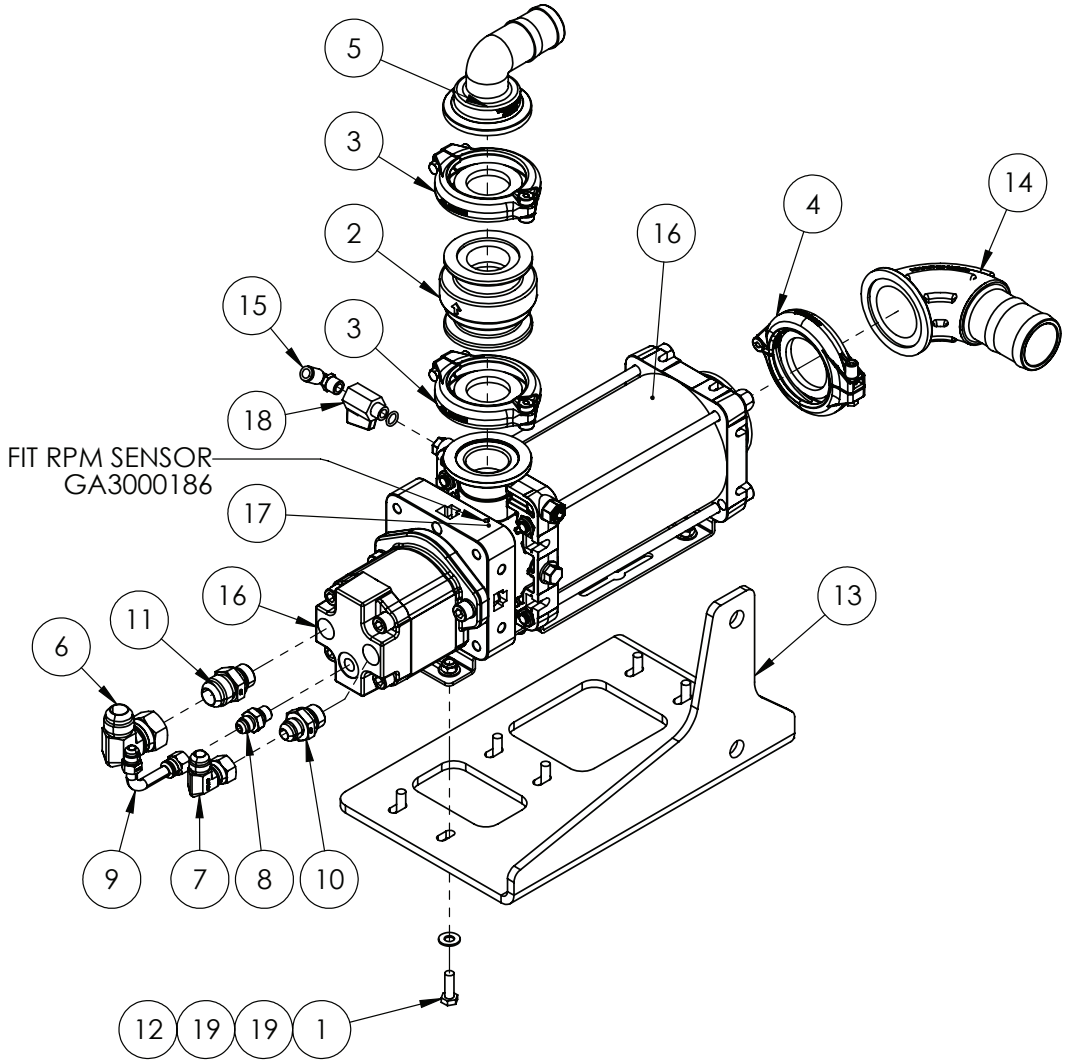

IF DESCRIPTION PREFIX IS ASSEMBLY DRAWING ONLY OR PRODUCTION DRAWING ONLY THE ITEM IS NOT FOR SALE			
ITEM	PART NUMBER	DESCRIPTION	QTY
1	GA5004711	BOLT M8 X 25 GR8.8 ZP	6
2	GA5077890	CHECK VALVE, 2" MANIFOLD FLANGE, BANJO	1
3	GA2000114	FLANGE CLAMP, AND GASKET, 1.5", SERIES 200, HYPRO	2
4	GA2000115	FLANGE CLAMP, AND GASKET, 2", SERIES 220, HYPRO	1
5	GA5077834	HOSE BARB, ELBOW, 90 DEGREE, 2" FLANGE X 1 1/2" HOSE, BANJO	1
6	GA3500823	HYDRAULIC ADAPTOR ELBOW, 1 1/16" JIC MALE X 1 1/16" JIC FEMALE SWIVEL, S15-1717	1
7	GA3500822	HYDRAULIC ADAPTOR ELBOW, 3/4" JIC MALE X 3/4" JIC FEMALE SWIVEL, S15-1212	1
8	GA3500544	HYDRAULIC ADAPTOR NIPPLE, 1/4" BSP O-RING X 9/16" JIC, S74-0409	1
9	GA3501299	HYDRAULIC ADAPTOR, TUBE BEND, 90 DEG, 9/16" JIC MALE TO 9/16" JIC FEMALE SWIVEL, S103-0909	1
10	GA3500303	HYDRAULIC ADAPTER, NIPPLE, 1/2" BSPP O-RING MALE X 3/4" JIC MALE, S74-0812	1
11	GA3500720	HYDRAULIC ADAPTER, NIPPLE, 1/2" BSPP O-RING MALE X 1 1/16" JIC MALE, S74-0817	1
12	GA5004917	NUT M8 NYLOC ZP	6
13	GA4411605	PLATE, PUMP MOUNT, SINGLE MSP400, PRAIRIE PRO	1
14	GA2000071	PLUMBING FITTING, SWEEP ELBOW, 90, 2" FLANGE TO 2" BARB, M220BRBSWP90, BANJO	1
15	GA5052690	PNEUMATIC FITTING, ELBOW, 90 DEGREE, 1/4 BSP MALE X 8mm PUSH TYPE, METAL	1
16	GA2000123	PUMP, MULTISTAGE CENTRIFUGAL, HYDRAULIC DRIVE, 2" FP FLANGE INLET, 2" SP FLANGE OUTLET, ARAG MP400	1
17	GA3000186	SENSOR, PUMP RPM, ARAG MP400 / MSP400	1
18	GA5018323	VALVE, BALL, 1/4 MALE, FEMALE, BLACK LEVER HANDLE, CHROMED	1
19	GA5003643	WASHER 8mm FLAT SS HD	12
GA4909095 GOLDACRES		PUMP ASSEMBLY, CENTRIFUGAL, SINGLE MOUNTING	REV 02

Pump, MSP400 Assembly, Dual Mounting

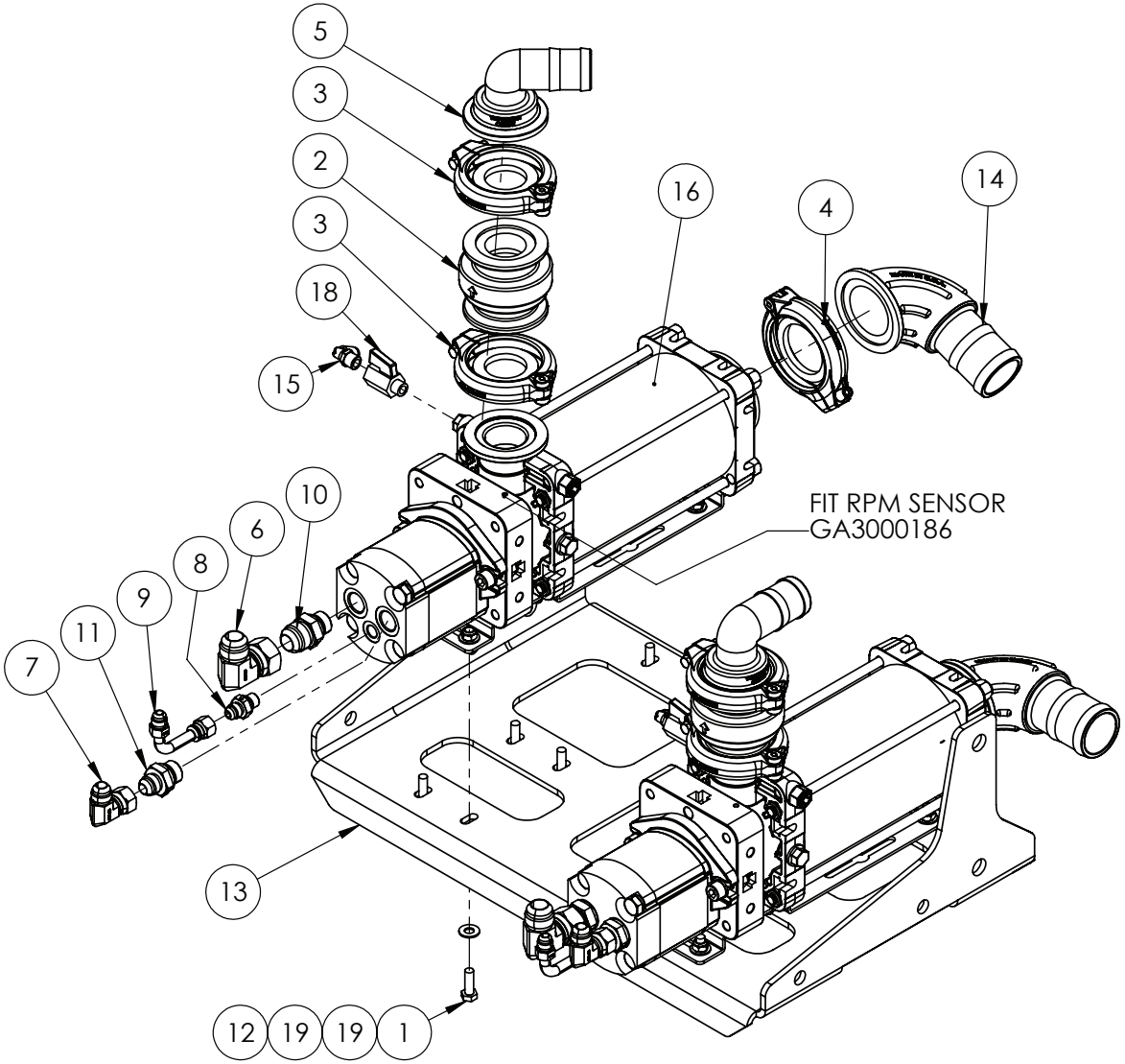

IF DESCRIPTION PREFIX IS ASSEMBLY DRAWING ONLY OR PRODUCTION DRAWING ONLY THE ITEM IS NOT FOR SALE			
ITEM	PART NUMBER	DESCRIPTION	QTY
1	GA5004711	BOLT M8 X 25 GR8.8 ZP	12
2	GA5077890	CHECK VALVE, 2" MANIFOLD FLANGE, BANJO	2
3	GA2000114	FLANGE CLAMP, AND GASKET, 1.5", SERIES 200, HYPRO	4
4	GA2000115	FLANGE CLAMP, AND GASKET, 2", SERIES 220, HYPRO	2
5	GA5077834	HOSE BARB, ELBOW, 90 DEGREE, 2" FLANGE X 1 1/2" HOSE, BANJO	2
6	GA3500823	HYDRAULIC ADAPTOR ELBOW, 1 1/16" JIC MALE X 1 1/16" JIC FEMALE SWIVEL, S15-1717	2
7	GA3500822	HYDRAULIC ADAPTOR ELBOW, 3/4" JIC MALE X 3/4" JIC FEMALE SWIVEL, S15-1212	2
8	GA3500544	HYDRAULIC ADAPTOR NIPPLE, 1/4" BSP O-RING X 9/16" JIC, S74-0409	2
9	GA3501299	HYDRAULIC ADAPTOR, TUBE BEND, 90 DEG, 9/16" JIC MALE TO 9/16" JIC FEMALE SWIVEL, S103-0909	2
10	GA3500720	HYDRAULIC ADAPTER, NIPPLE, 1/2" BSPP O-RING MALE X 1 1/16" JIC MALE, S74-0817	2
11	GA3500303	HYDRAULIC ADAPTER, NIPPLE, 1/2" BSPP O-RING MALE X 3/4" JIC MALE, S74-0812	2
12	GA5004917	NUT M8 NYLOC ZP	12
13	GA4411600	PLATE, PUMP MOUNT, DUAL MSP400, PRAIRIE PRO	1
14	GA2000071	PLUMBING FITTING, SWEEP ELBOW, 90, 2" FLANGE TO 2" BARB, M220BRBSWP90, BANJO	2
15	GA5052690	PNEUMATIC FITTING, ELBOW, 90 DEGREE, 1/4 BSP MALE X 8mm PUSH TYPE, METAL	2
16	GA2000123	PUMP, MULTISTAGE CENTRIFUGAL, HYDRAULIC DRIVE, 2" FP FLANGE INLET, 2" SP FLANGE OUTLET, ARAG MP400	2
17	GA3000186	SENSOR, PUMP RPM, ARAG MP400 / MSP400	2
18	GA5018323	VALVE, BALL, 1/4 MALE, FEMALE, BLACK LEVER HANDLE, CHROMED	2
19	GA5003643	WASHER 8mm FLAT SS HD	24
GA4909090 GOLDACRES		PUMP ASSEMBLY, DUAL MSP400, PRAIRIE PRO	REV 02

Platform Mounting, 5000L & 6500L

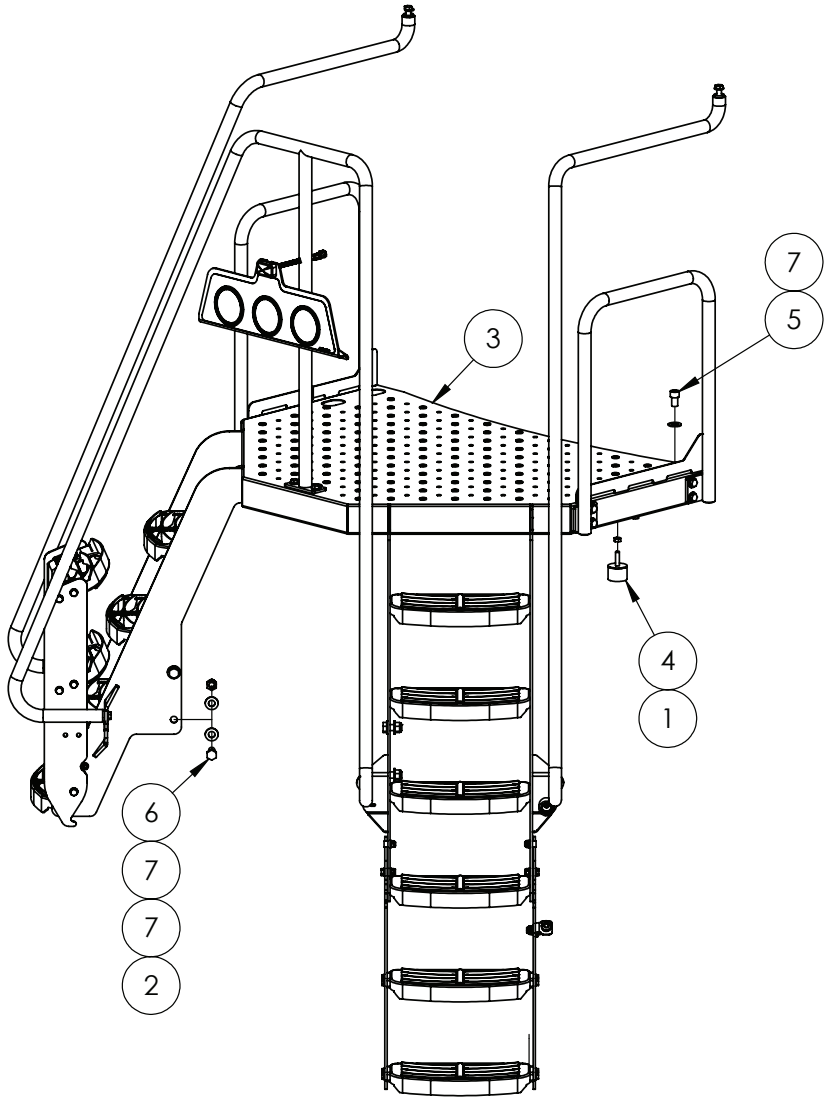

IF DESCRIPTION PREFIX IS ASSEMBLY DRAWING ONLY OR PRODUCTION DRAWING ONLY THE ITEM IS NOT FOR SALE			
ITEM	PART NUMBER	DESCRIPTION	QTY
1	GA5012459	NUT M10 HEX ZP	2
2	GA5001029	NUT M16 NYLOC ZP	4
3	GA4603090	PLATFORM, 5000L AND 6500L, PRAIRIE PRO, 2021	1
4	GA5052815	RUBBER STOPPER, DIAMETER 50 X 35 LONG, WITH M10 X 35 STUD	2
5	GA5000905	SHCS M16 X 25 GR12.9 ZP	4
6	GA5011287	SET SCREW M16 X 40 GR 8.8 ZP	4
7	GA5001043	WASHER 16mm FLAT SS HD	12
GA4951075 GOLDACRES		PLATFORM ASSEMBLY, 5000 & 6500L, PRAIRIE PRO, 2021	REV 01

Platform Mounting, 8500L & 10,000L

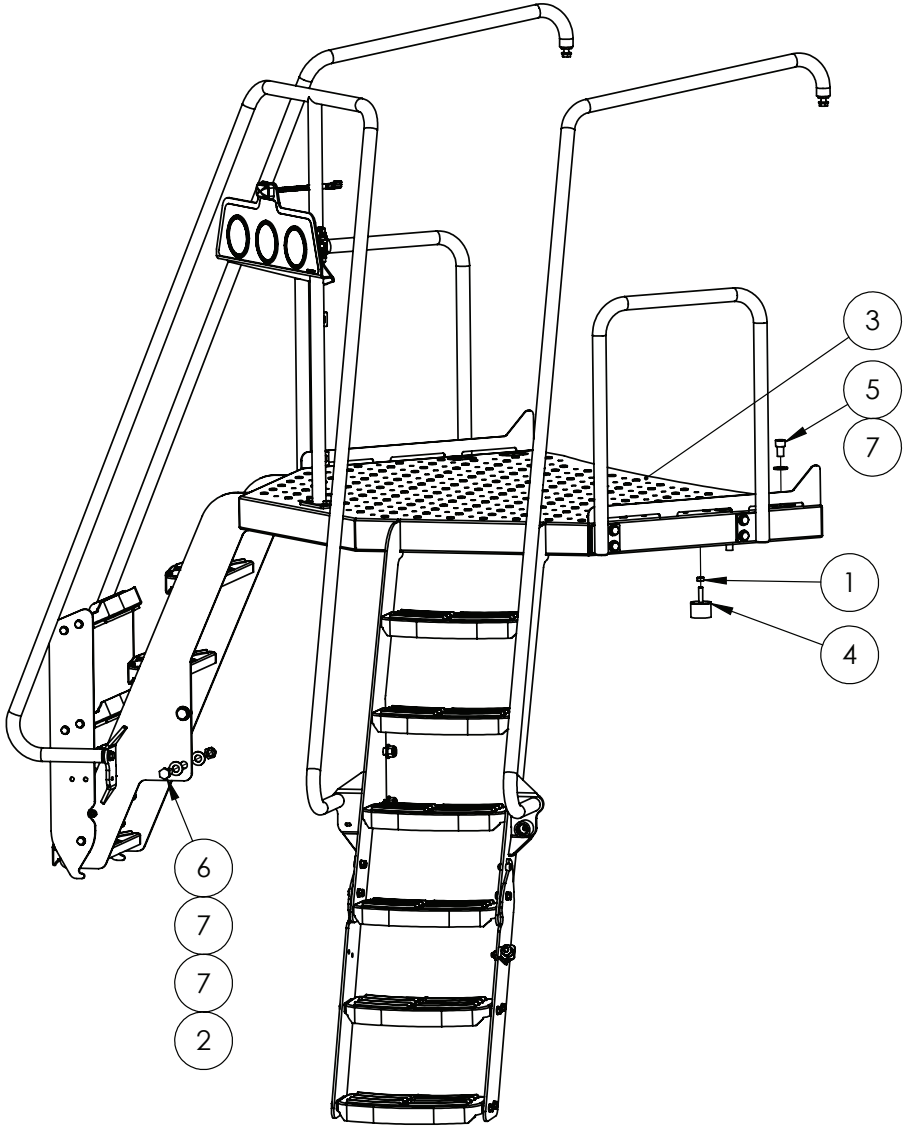

IF DESCRIPTION PREFIX IS ASSEMBLY DRAWING ONLY OR PRODUCTION DRAWING ONLY THE ITEM IS NOT FOR SALE			
ITEM	PART NUMBER	DESCRIPTION	QTY
1	GA5012459	NUT M10 HEX ZP	2
2	GA5001029	NUT M16 NYLOC ZP	4
3	GA4603095	PLATFORM, 8500L AND 10000L, PRAIRIE PRO, 2021	1
4	GA5052815	RUBBER STOPPER, DIAMETER 50 X 35 LONG, WITH M10 X 35 STUD	2
5	GA5000905	SHCS M16 X 25 GR12.9 ZP	4
6	GA5011287	SET SCREW M16 X 40 GR 8.8 ZP	4
7	GA5001043	WASHER 16mm FLAT SS HD	12
GA4951080 GOLDACRES		PLATFORM ASSEMBLY, 8500L, PRAIRIE PRO, 2021	REV 01

Platform Access Ladder Assembly

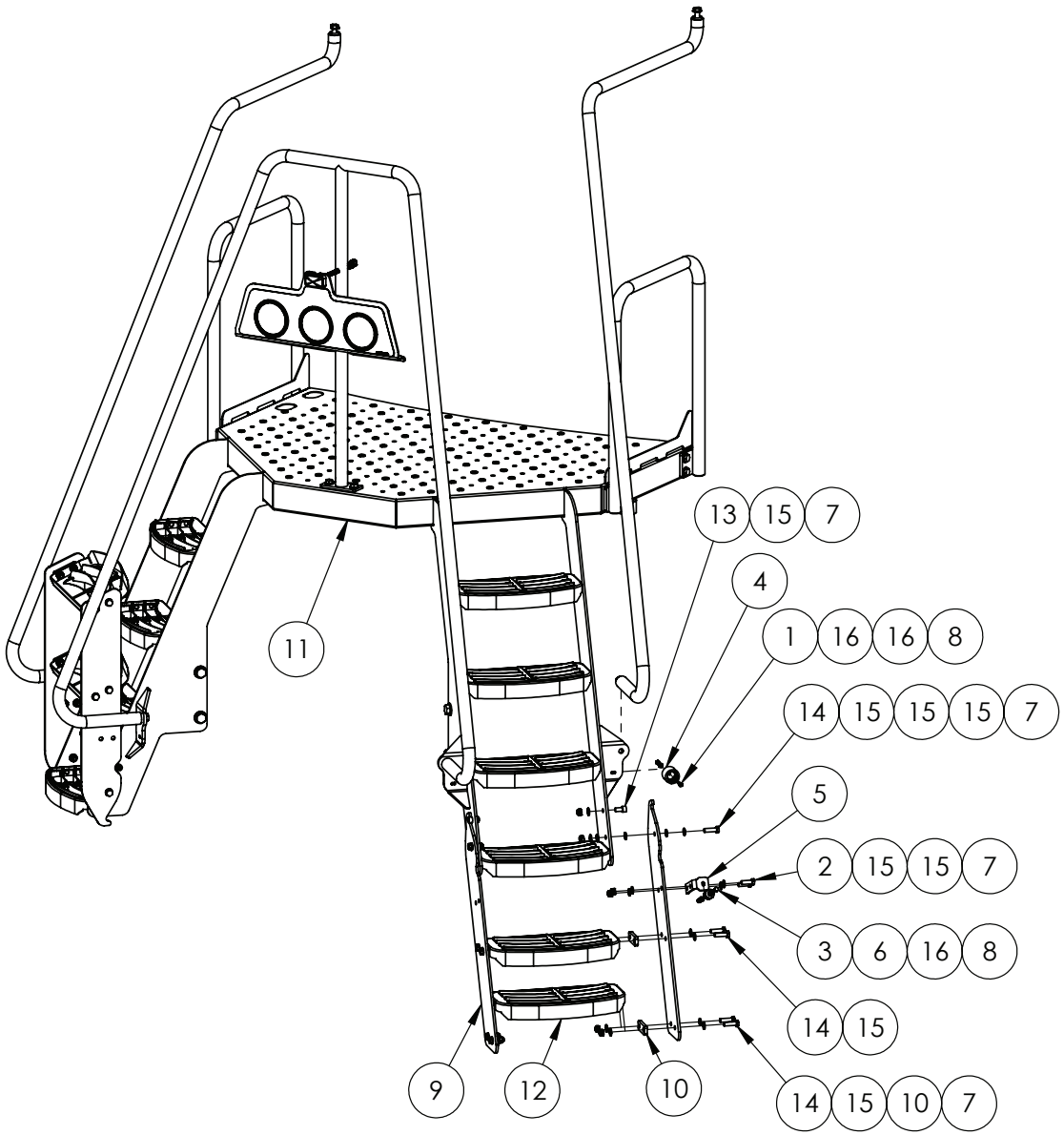

IF DESCRIPTION PREFIX IS ASSEMBLY DRAWING ONLY OR PRODUCTION DRAWING ONLY THE ITEM IS NOT FOR SALE			
ITEM	PART NUMBER	DESCRIPTION	QTY
1	GA5004067	BHCS M6 X 25 SS A2-70	2
2	GA5065455	BOLT M10 X 30 GR8.8 ZP	4
3	GA5004077	BOLT M6 X 30 GR8.8 ZP	2
4	GA5008629	FEMALE RUBBER DOOR HOLDER (BLACK)	2
5	GA4522617	LATCH PLATE SUIT PRAIRIE EF NARROW STEP	2
6	GA5011607	MALE RUBBER DOOR HOLDER	2
7	GA5000141	NUT M10 NYLOC ZP	28
8	GA5048115	NUT M6 NYLOC ZP	4
9	GA4410405	PLATE, PLATFORM, LOWER STEP MOUNT, PRAIRIE PRO, 2021	4
10	GA4410430	PLATE, PLATFORM, LOWER STEP SPACER, PRAIRIE PRO, 2021	8
11	GA4603090	PLATFORM, 5000L AND 6500L, PRAIRIE PRO, 2021	1
12	GA5070520	PRESSED STEP TREAD BOLT IN 370mm WIDE UNPAINTED	4
13	GA5006137	SHCS M10 X 20 SS A2-70	4
14	GA5006111	SET SCREW M10 X 35 GR8.8 ZP	20
15	GA5000117	WASHER 10mm FLAT SS HD	56
16	GA5004437	WASHER 6mm FLAT SS	6
17	GA5026453	WASHER M30 FLAT	8
GA4951075 GOLDACRES		PLATFORM ASSEMBLY, 5000 & 6500L, PRAIRIE PRO, 2021	REV 01

Platform & Gauges, 5000L & 6500L

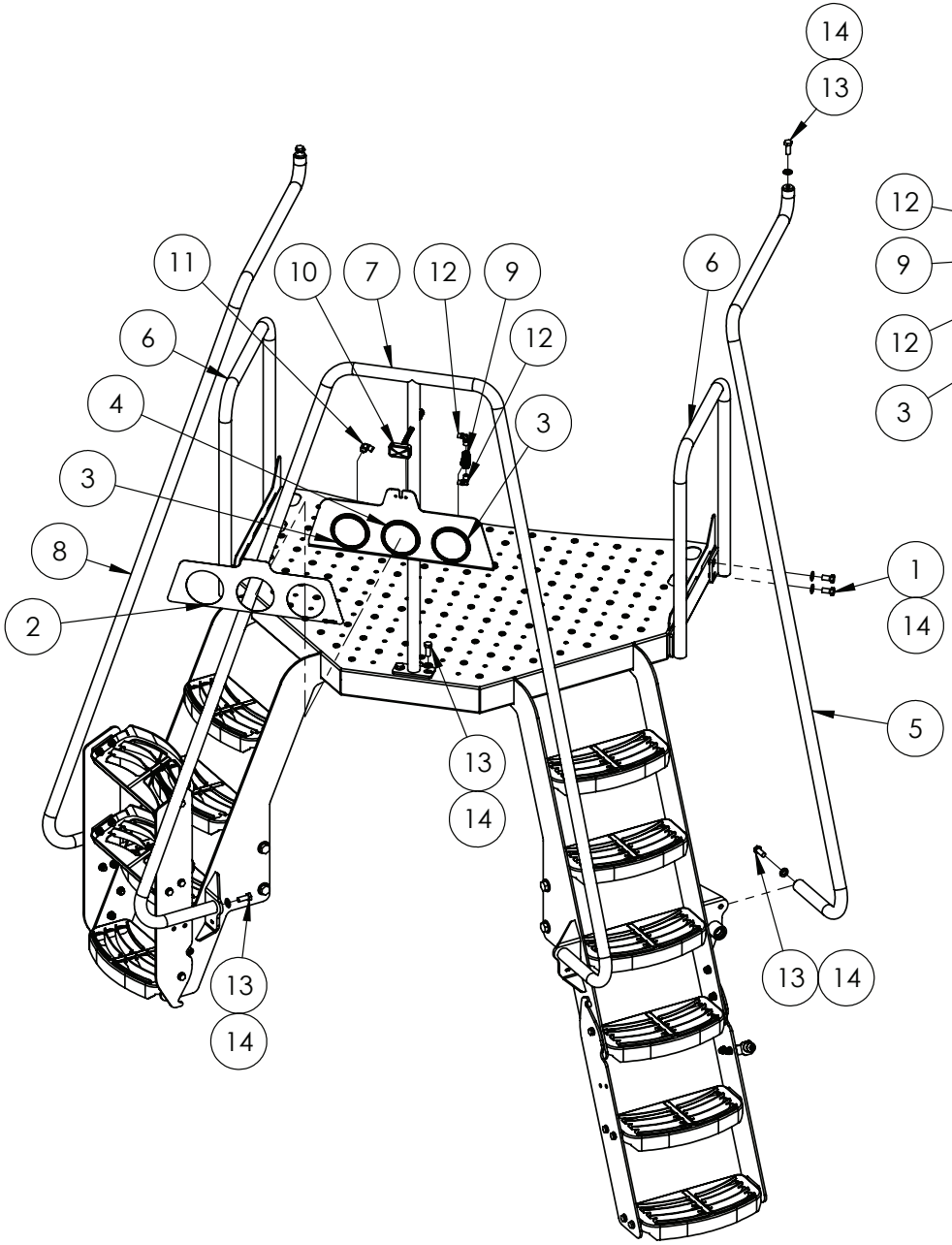

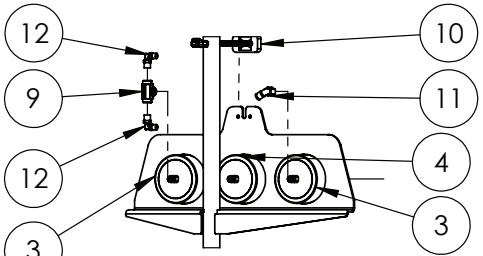

REAR OF GUAGES

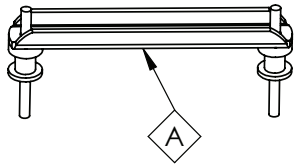

REPLACEMENT PARTS			
ITEM	PART NUMBER	DESCRIPTION	QTY
A	GA5075460	GAUGE RETAINER, MOUNTING BRACKET, 100mm GAUGE, HYDAC	-
-	GA5049695	HOSE, HYDRAULIC, 1/4, E24, 2 WIRE, BLACK	-
-	GA5004382	TUBE, NYLON, 8mm, BLACK	-

IF DESCRIPTION PREFIX IS ASSEMBLY DRAWING ONLY OR PRODUCTION DRAWING ONLY THE ITEM IS NOT FOR SALE			
ITEM	PART NUMBER	DESCRIPTION	QTY
1	GA5011229	BOLT M12 X 25 GR8.8 ZP	8
2	GA8701660	DECAL, GAUGE PLATE WITH COMPRESSOR LIGHT, PRAIRIE PRO, MY22	1
3	GA5074050	GAUGE PRESSURE, REAR MOUNT, 10 BAR, 100mm FACE, 1/4" MALE BSPT, SUIT PRAIRIE PRO, MOUNT INCLUDED	2
4	GA5074055	GAUGE PRESSURE, REAR MOUNT, 250 BAR, 100mm FACE, 1/4" MALE BSPT, SUIT PRAIRIE PRO, MOUNT INCLUDED	1
5	GA4603120	HANDRAIL, LH, 5000L AND 6500L, PRAIRIE PRO, 2021	1
6	GA4603300	HANDRAIL, MIDDLE SIDE RAIL, PRAIRIE PRO, 2021	2
7	GA4603110	HANDRAIL, MIDDLE, 5000L AND 6500L, PRAIRIE PRO, 2021	1
8	GA4603125	HANDRAIL, RH, 5000L AND 6500L, PRAIRIE PRO, 2021	1
9	GA3500242	HYDRAULIC ADAPTOR, TEE, 1/4" BSPT FEMALE X 1/4" BSPT FEMALE X 1/4" BSPT FEMALE	1
10	GA3000267	LIGHT, LED, ORANGE, CLEARANCE, DEUTSCH CONNECTOR	1
11	GA7000015	PNEUMATIC FITTING, FEMALE 1/4" BSPP X 8mm PUSH IN, FEMALE STUD ELBOW	1
12	GA5016233	PNEUMATIC FITTING, ELBOW, 90 DEGREE, 1/4 BSP MALE X 6mm PUSH IN TYPE, METAL	2
13	GA5000305	SET SCREW M12 X 30 GR8.8 ZP	8
14	GA5000577	WASHER 12mm FLAT SS HD	16
GA4951075 GOLDACRES		PLATFORM ASSEMBLY, 5000 & 6500L, PRAIRIE PRO, 2021	REV 01

Platform & Gauges, 8500L & 10,000L

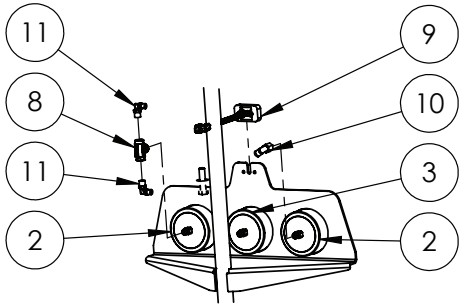

REAR OF GAUGES

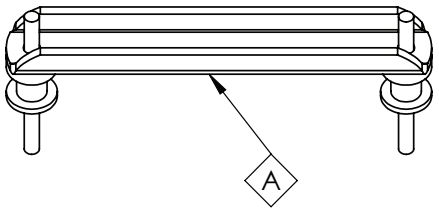

REPLACEMENT PARTS			
ITEM	PART NUMBER	DESCRIPTION	QTY
A	GA5075460	GAUGE RETAINER, MOUNTING BRACKET, 100mm GAUGE, HYDAC	-
-	GA5049695	HOSE, HYDRAULIC, 1/4, E24, 2 WIRE, BLACK	-
-	GA5004382	TUBE, NYLON, 8mm, BLACK	-

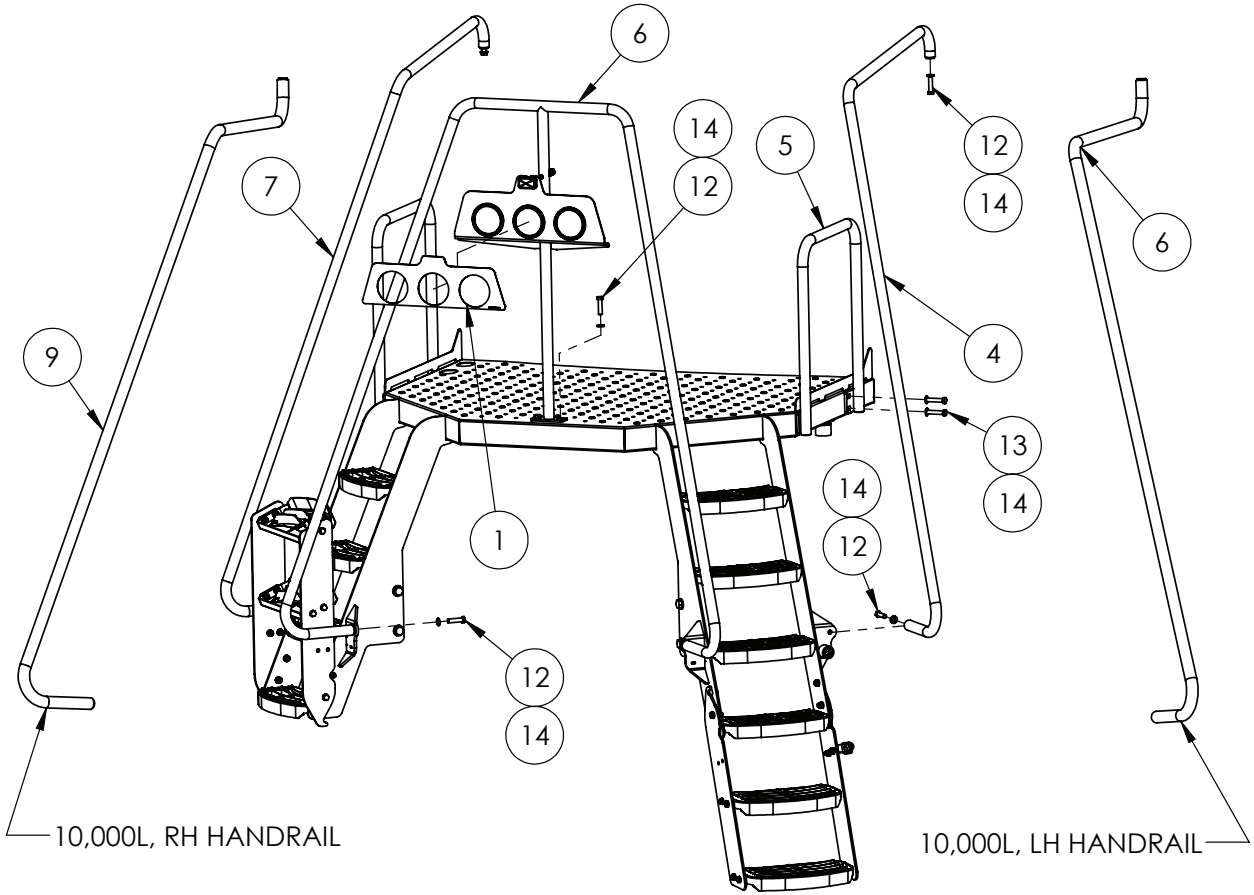

HANDRAILS AND GAUGES

IF DESCRIPTION PREFIX IS ASSEMBLY DRAWING ONLY OR PRODUCTION DRAWING ONLY THE ITEM IS NOT FOR SALE			
ITEM	PART NUMBER	DESCRIPTION	QTY
1	GA8701660	DECAL, GAUGE PLATE WITH COMPRESSOR LIGHT, PRAIRIE PRO, MY22	1
2	GA5074050	GAUGE PRESSURE, REAR MOUNT, 10 BAR, 100mm FACE, 1/4" MALE BSPT, SUIT PRAIRIE PRO, MOUNT INCLUDED	2
3	GA5074055	GAUGE PRESSURE, REAR MOUNT, 250 BAR, 100mm FACE, 1/4" MALE BSPT, SUIT PRAIRIE PRO, MOUNT INCLUDED	1
4	GA4603130	HANDRAIL, LH, 8500L, PRAIRIE PRO, 2021	1
5	GA4603300	HANDRAIL, MIDDLE SIDE RAIL, PRAIRIE PRO, 2021	2
6	GA4603115	HANDRAIL, MIDDLE, 8500L AND 10000L, PRAIRIE PRO, 2021	1
7	GA4603135	HANDRAIL, RH, 8500L, PRAIRIE PRO, 2021	1
8	GA3500242	HYDRAULIC ADAPTOR, TEE, 1/4" BSPT FEMALE X 1/4" BSPT FEMALE X 1/4" BSPT FEMALE	1
9	GA3000267	LIGHT, LED, ORANGE, CLEARANCE, DEUTSCH CONNECTOR	1
10	GA7000015	PNEUMATIC FITTING, FEMALE 1/4" BSPP X 8mm PUSH IN, FEMALE STUD ELBOW	1
11	GA5016233	PNEUMATIC FITTING, ELBOW, 90 DEGREE, 1/4 BSP MALE X 6mm PUSH IN TYPE, METAL	2
12	GA5011237	SET SCREW M12 X 50 GR8.8 ZP	8
13	GA5000329	SET SCREW M12 X 60 GR8.8 ZP	8
14	GA5000577	WASHER 12mm FLAT SS HD	16
GA4951080 GOLDACRES		PLATFORM ASSEMBLY, 8500L, PRAIRIE PRO, 2021	REV 01

Boom Rest Assembly, 5000L & 6500L

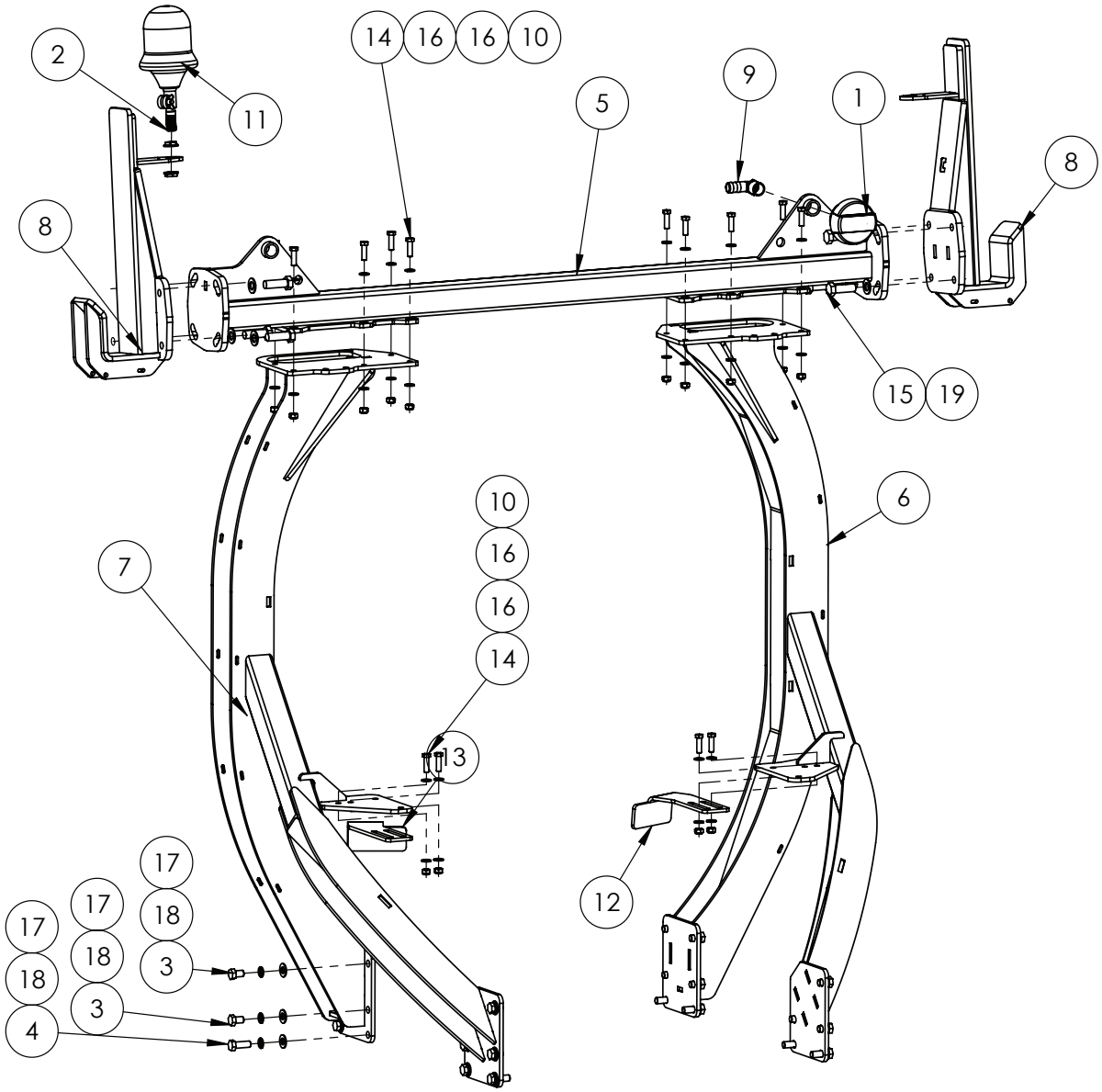

IF DESCRIPTION PREFIX IS ASSEMBLY DRAWING ONLY OR PRODUCTION DRAWING ONLY THE ITEM IS NOT FOR SALE			
ITEM	PART NUMBER	DESCRIPTION	QTY
1	GA5005259	AIR FILTER	1
2	GA5020411	BEACON MOUNT SCREW ON	1
3	GA5000903	BOLT M16 X 25 GR8.8 ZP	14
4	GA5011291	BOLT M16 X 45 GR8.8 ZP	8
5	GA4603020	BOOM REST CROSS MEMBER, RIVX, PRAIRIE PRO, 2021	1
6	GA4603030	BOOM REST UPRIGHT, LH, 5000L AND 6500L, PRAIRIE PRO, 2021	1
7	GA4603035	BOOM REST UPRIGHT, RH, 5000L AND 6500L, PRAIRIE PRO, 2021	1
8	GA4603255	BOOM REST, CROSS MEMBER CATCH, RIVX, PRAIRIE PRO, 2021	2
9	GA5077723	HOSE BARB, ELBOW, 90 DEGREE, 1" MALE X 1" HOSE, BANJO	1
10	GA5012461	NUT M12 NYLOC ZP	14
11	GA5048975	ORANGE BEACON LIGHT	1
12	GA4410535	PLATE, TANK STOP, LH, 8500 & 10000L, PRAIRIE PRO, 2021	1
13	GA4410540	PLATE, TANK STOP, RH, 8500 & 10000L, PRAIRIE PRO, 2021	1
14	GA5000319	SET SCREW M12 X 40 GR8.8 ZP	14
15	GA5001557	SET SCREW M20 X 2P X 60 GR8.8 ZP	8
16	GA5000577	WASHER 12mm FLAT SS HD	28
17	GA5001043	WASHER 16mm FLAT SS HD	22
18	GA5001051	WASHER 16mm SPRING SS	22
19	GA5001741	WASHER 20mm FLAT SS HD	8
GA7800037 GOLDACRES		BOOM REST ASSEMBLY, 5000L & 6500L	REV 00.B

Boom Rest Assembly, 8500L

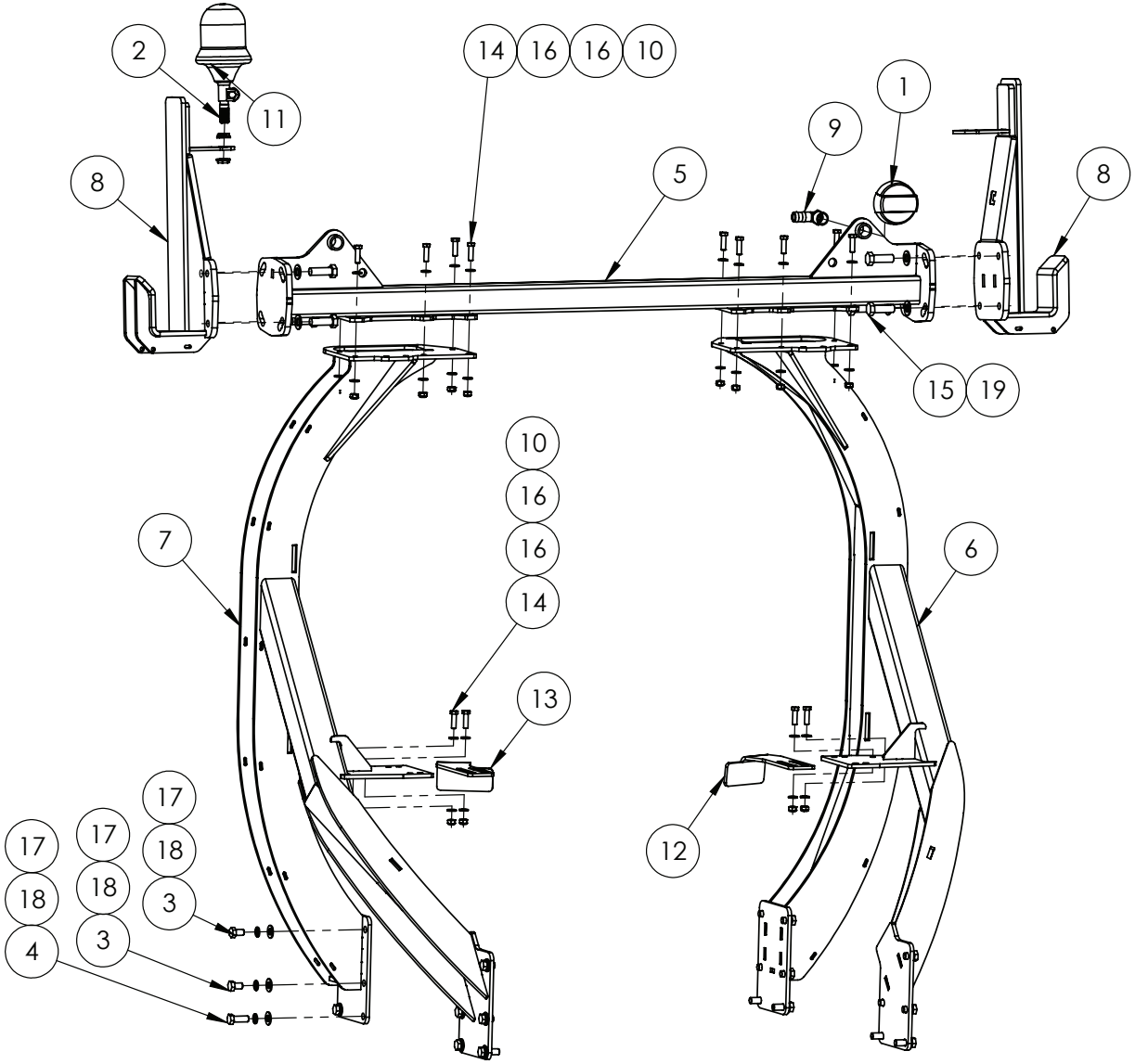

IF DESCRIPTION PREFIX IS ASSEMBLY DRAWING ONLY OR PRODUCTION DRAWING ONLY THE ITEM IS NOT FOR SALE			
ITEM	PART NUMBER	DESCRIPTION	QTY
1	GA5005259	AIR FILTER	1
2	GA5020411	BEACON MOUNT SCREW ON	1
3	GA5000903	BOLT M16 X 25 GR8.8 ZP	14
4	GA5011291	BOLT M16 X 45 GR8.8 ZP	8
5	GA4603020	BOOM REST CROSS MEMBER, RIVX, PRAIRIE PRO, 2021	1
6	GA4603040	BOOM REST UPRIGHT, LH, 8500L, PRAIRIE PRO, 2021	1
7	GA4603045	BOOM REST UPRIGHT, RH, 8500L, PRAIRIE PRO, 2021	1
8	GA4603255	BOOM REST, CROSS MEMBER CATCH, RIVX, PRAIRIE PRO, 2021	2
9	GA5077723	HOSE BARB, ELBOW, 90 DEGREE, 1" MALE X 1" HOSE, BANJO	1
10	GA5012461	NUT M12 NYLOC ZP	14
11	GA5048975	ORANGE BEACON LIGHT	1
12	GA4410535	PLATE, TANK STOP, LH, 8500 & 10000L, PRAIRIE PRO, 2021	1
13	GA4410540	PLATE, TANK STOP, RH, 8500 & 10000L, PRAIRIE PRO, 2021	1
14	GA5000319	SET SCREW M12 X 40 GR8.8 ZP	14
15	GA5001557	SET SCREW M20 X 2P X 60 GR8.8 ZP	8
16	GA5000577	WASHER 12mm FLAT SS HD	28
17	GA5001043	WASHER 16mm FLAT SS HD	22
18	GA5001051	WASHER 16mm SPRING SS	22
19	GA5001741	WASHER 20mm FLAT SS HD	8
GA7800131 GOLDACRES		BOOM CROSS BAR ASSEMBLY, RIVX, PRAIRIE PRO, 2021	REV 00.D

Boom Rest Assembly, 10,000L

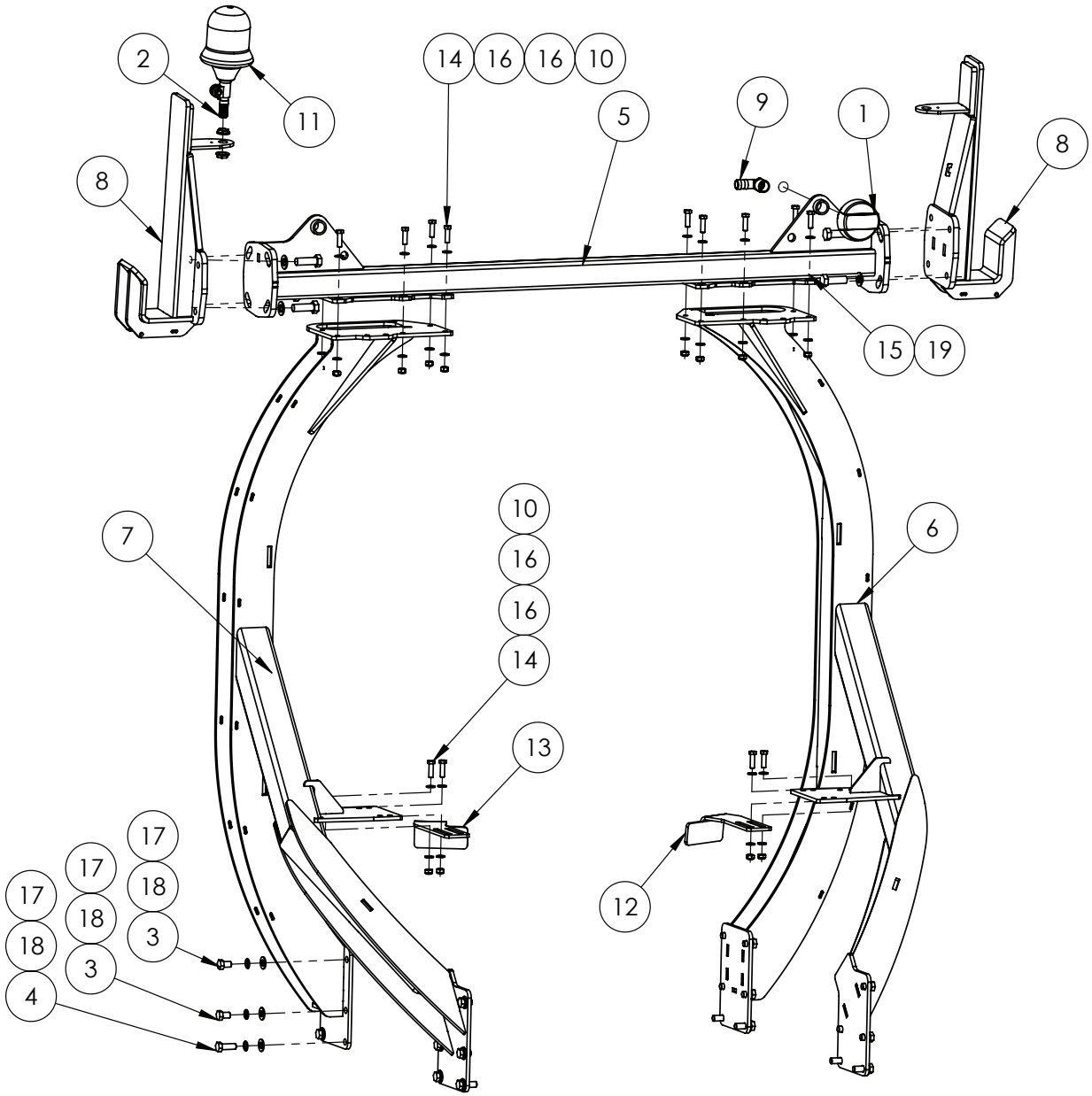

IF DESCRIPTION PREFIX IS ASSEMBLY DRAWING ONLY OR PRODUCTION DRAWING ONLY THE ITEM IS NOT FOR SALE			
ITEM	PART NUMBER	DESCRIPTION	QTY
1	GA5005259	AIR FILTER	1
2	GA5020411	BEACON MOUNT SCREW ON	1
3	GA5000903	BOLT M16 X 25 GR8.8 ZP	14
4	GA5011291	BOLT M16 X 45 GR8.8 ZP	8
5	GA4603020	BOOM REST CROSS MEMBER, RIVX, PRAIRIE PRO, 2021	1
6	GA4603050	BOOM REST UPRIGHT, LH, 10000L, PRAIRIE PRO, 2021	1
7	GA4603055	BOOM REST UPRIGHT, RH, 10000L, PRAIRIE PRO, 2021	1
8	GA4603255	BOOM REST, CROSS MEMBER CATCH, RIVX, PRAIRIE PRO, 2021	2
9	GA5077723	HOSE BARB, ELBOW, 90 DEGREE, 1" MALE X 1" HOSE, BANJO	1
10	GA5012461	NUT M12 NYLOC ZP	14
11	GA5048975	ORANGE BEACON LIGHT	1
12	GA4410535	PLATE, TANK STOP, LH, 8500 & 10000L, PRAIRIE PRO, 2021	1
13	GA4410540	PLATE, TANK STOP, RH, 8500 & 10000L, PRAIRIE PRO, 2021	1
14	GA5000319	SET SCREW M12 X 40 GR8.8 ZP	14
15	GA5001557	SET SCREW M20 X 2P X 60 GR8.8 ZP	8
16	GA5000577	WASHER 12mm FLAT SS HD	28
17	GA5001043	WASHER 16mm FLAT SS HD	22
18	GA5001051	WASHER 16mm SPRING SS	22
19	GA5001741	WASHER 20mm FLAT SS HD	8
GA7800035 GOLDACRES		BOOM CROSS BAR ASSEMBLY, RIVX, PRAIRIE PRO, 2021	REV 00.B

Boom Rest, 48mt

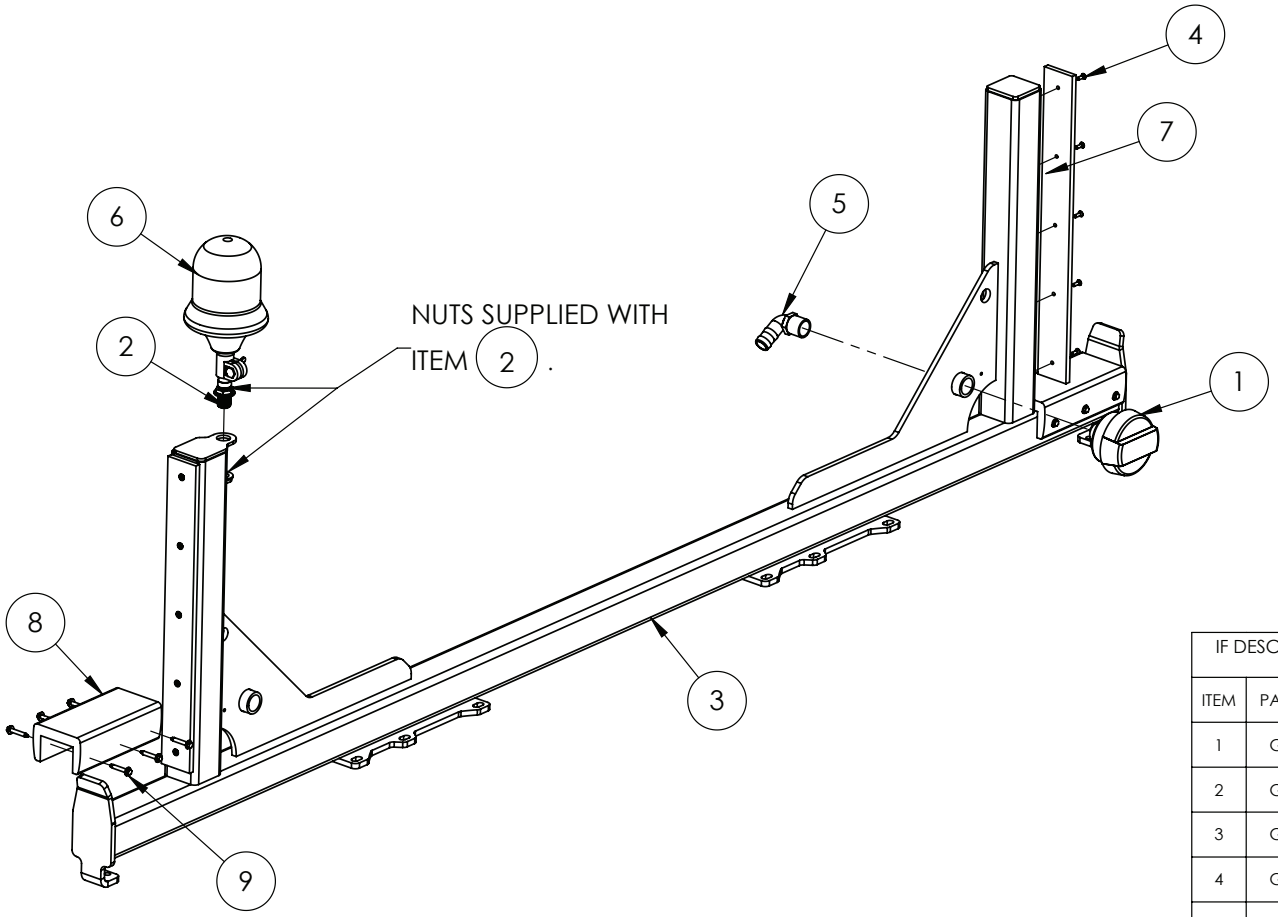

IF DESCRIPTION PREFIX IS ASSEMBLY DRAWING ONLY OR PRODUCTION DRAWING ONLY THE ITEM IS NOT FOR SALE			
ITEM	PART NUMBER	DESCRIPTION	QTY
1	GA5005259	AIR FILTER	1
2	GA5020411	BEACON MOUNT SCREW ON	1
3	GA4603025	BOOM REST CROSS MEMBER, 48M, PRAIRIE PRO, 2021	1
4	GA5051230	CSCS M5 X 16 SS A2-70	10
5	GA5077723	HOSE BARB, ELBOW, 90 DEGREE, 1" MALE X 1" HOSE, BANJO	1
6	GA5048975	ORANGE BEACON LIGHT	1
7	GA5066630	PLASTIC WEAR STRIP POLYSTONE	2
8	GA5014617	RUBBER CHANNEL 350mm	2
9	GA5000707	TEK SCREW 14G X 42mm GALVANISED	12
GA4951090 GOLDACRES		BOOM REST CROSS MEMBER ASSEMBLY, 48M, PRAIRIE PRO, 2021	REV 00

Air Reservoir Mounting, 5000L & 6500L

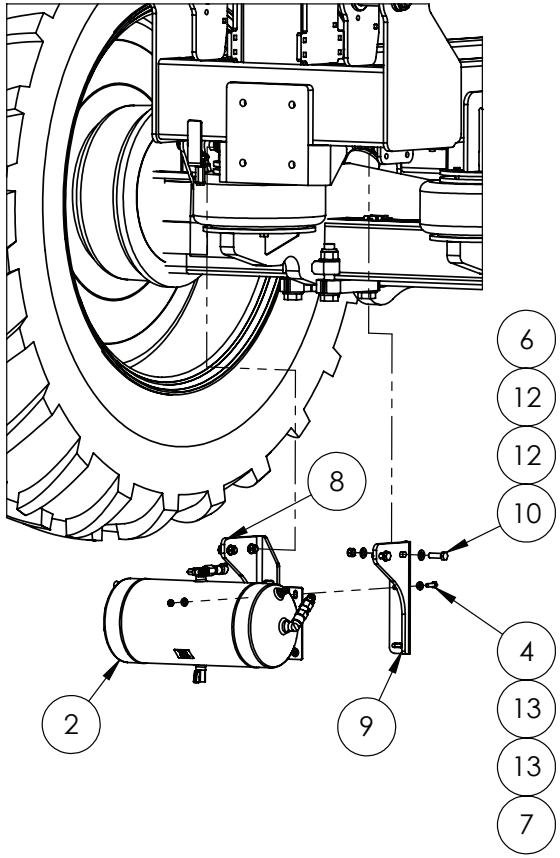

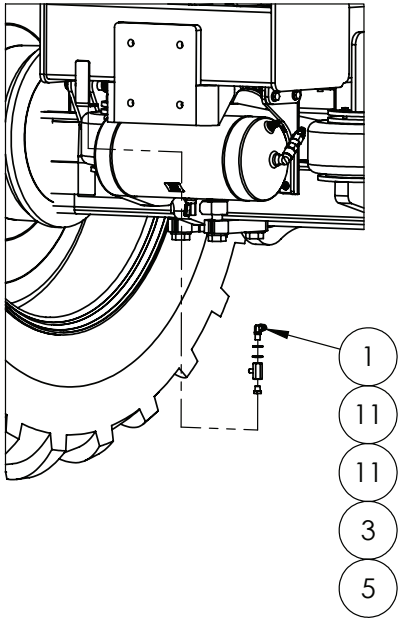

IF DESCRIPTION PREFIX IS ASSEMBLY DRAWING ONLY OR PRODUCTION DRAWING ONLY THE ITEM IS NOT FOR SALE			
ITEM	PART NUMBER	DESCRIPTION	QTY
1	GA5078518	AIR FITTING, ELBOW, SWIVEL, 3/8" TUBE, 1/4" NPT MALE, PUSH IN, BRASS, ALKON - AQ69-DOTS-6X4	1
2	GA4951060	AIR RESERVOIR ASSEMBLY, PRAIRIE PRO, 2021	1
3	GA5018321	BALL VALVE, 1/4" FEMALE, BLACK LEVER HANDLE, CHROMED	1
4	GA5011475	BOLT M8 X 30 GR8.8 ZP	4
5	GA5071207	BREATHER, SILENCER, 1/4 BUTTON	1
6	GA5012461	NUT M12 NYLOC ZP	4
7	GA5052590	NUT M8 NYLOC SS	4
8	GA4411490	PLATE, AIR RESERVOIR BRACKET, LEFT, 5000 & 6500L, PRAIRIE PRO, 2021	1
9	GA4411495	PLATE, AIR RESERVOIR BRACKET, RIGHT, 5000 & 6500L, PRAIRIE PRO, 2021	1
10	GA5000319	SET SCREW M12 X 40 GR8.8 ZP	4
11	GA5017655	WASHER 1/2 FLAT SS	2
12	GA5000577	WASHER 12mm FLAT SS HD	8
13	GA5003643	WASHER 8mm FLAT SS HD	8
GA7800260 GOLDACRES		ASSEMBLY DRAWING ONLY, 5000-6500L PNEUMATIC RESERVOIR & AIRBAG DUMP VALVE, PRAIRIE PRO S2	REV 00.A

Air Reservoir Mounting, 8500L & 10,000L

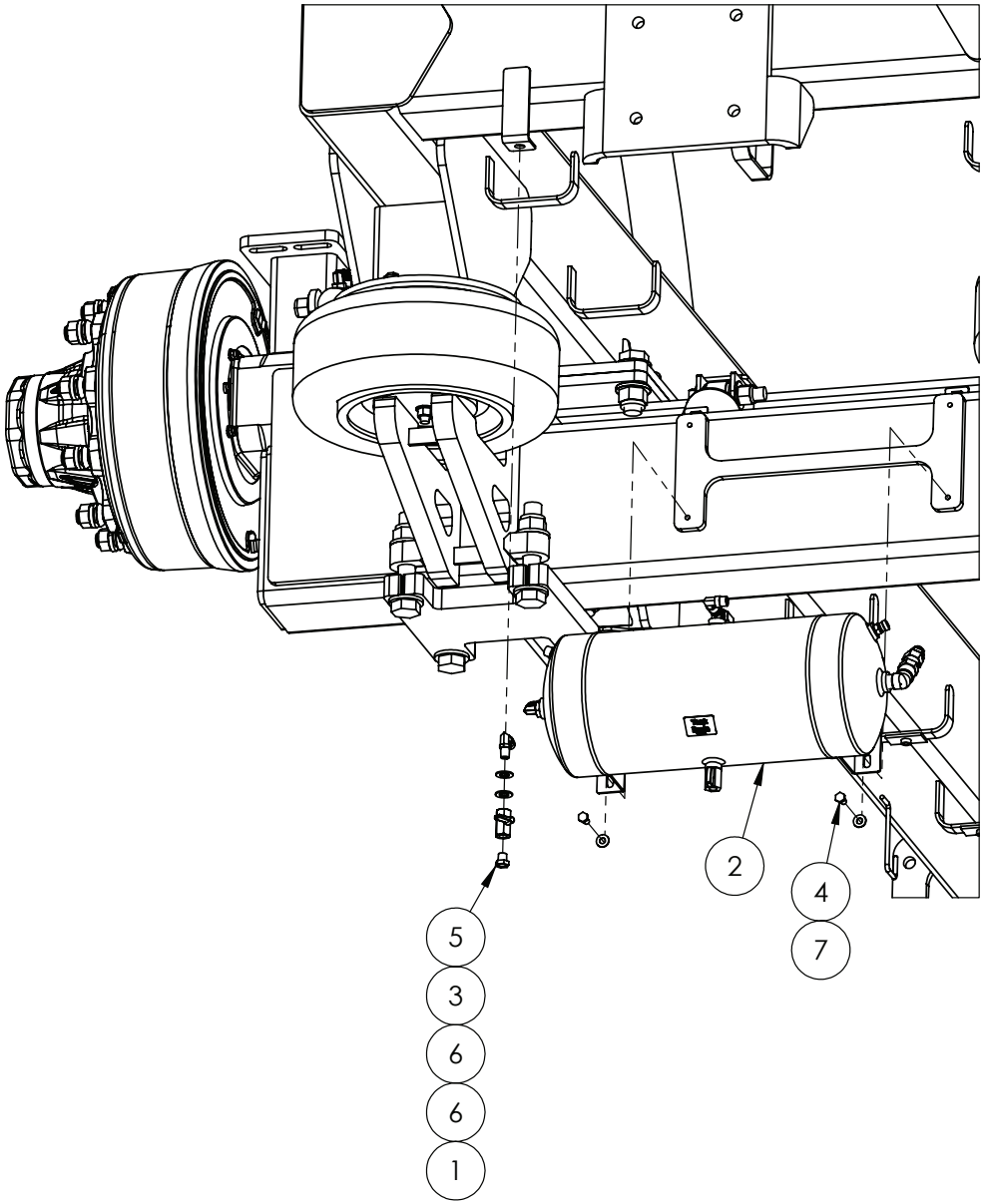

IF DESCRIPTION PREFIX IS ASSEMBLY DRAWING ONLY OR PRODUCTION DRAWING ONLY THE ITEM IS NOT FOR SALE			
ITEM	PART NUMBER	DESCRIPTION	QTY
1	GA5078518	AIR FITTING, ELBOW, SWIVEL, 3/8" TUBE, 1/4" NPT MALE, PUSH IN, BRASS, ALKON - AQ69-DOTS-6X4	1
2	GA4951060	AIR RESERVOIR ASSEMBLY, PRAIRIE PRO, 2021	1
3	GA5018321	BALL VALVE, 1/4" FEMALE, BLACK LEVER HANDLE, CHROMED	1
4	GA5011465	BOLT M8 X 16 GR8.8 ZP	4
5	GA5071207	BREATHER, SILENCER, 1/4 BUTTON	1
6	GA5017655	WASHER 1/2 FLAT SS	2
7	GA5003643	WASHER 8mm FLAT SS HD	4
GA7800261 GOLDACRES		ASSEMBLY DRAWING ONLY. 8500-10,000L PNEUMATIC RESERVOIR & AIRBAG DUMP VALVE, PRAIRIE PRO S2	REV 00

Tank, Air Reservoir

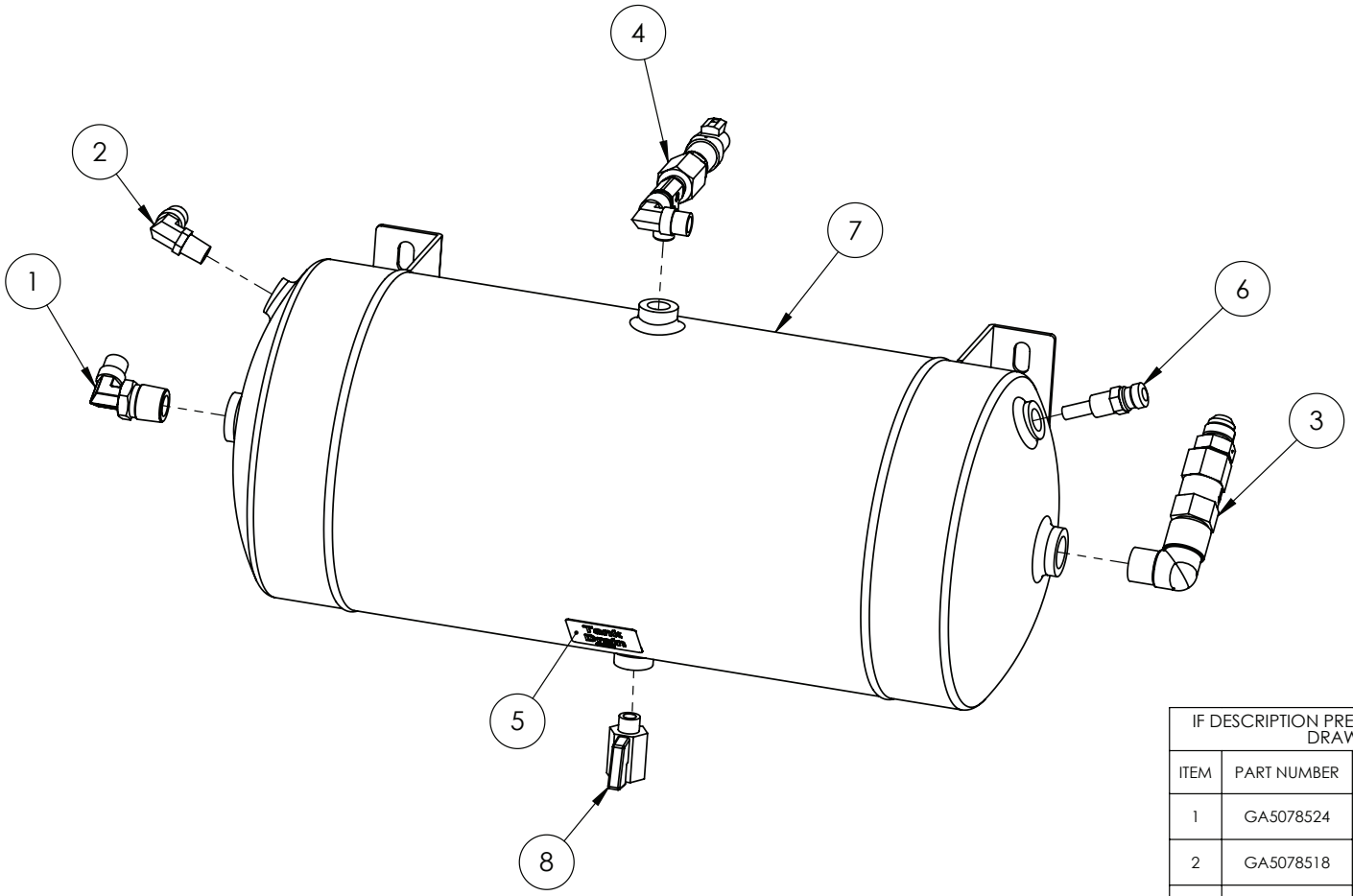

IF DESCRIPTION PREFIX IS ASSEMBLY DRAWING ONLY OR PRODUCTION DRAWING ONLY THE ITEM IS NOT FOR SALE			
ITEM	PART NUMBER	DESCRIPTION	QTY
1	GA5078524	AIR FITTING, ELBOW, SWIVEL, 3/8" TUBE, 1/2" NPT MALE, PUSH IN, BRASS, ALKON - AQ69-DOTS-6X8	1
2	GA5078518	AIR FITTING, ELBOW, SWIVEL, 3/8" TUBE, 1/4" NPT MALE, PUSH IN, BRASS, ALKON - AQ69-DOTS-6X4	1
3	GA4909215	ASSEMBLY DRAWING ONLY, AIR RESERVOIR RH POD CHECK VALVE FITTINGS	1
4	GA4909210	ASSEMBLY DRAWING ONLY, AIR RESERVOIR TOP FITTINGS	1
5	GA8701722	DECAL, TANK DRAIN	1
6	GA5017369	PRESSURE RELIEF VALVE	1
7	GA5071940	TANK, AIR, 14.75L, PROTEX AT3	1
8	GA5018323	VALVE, BALL, 1/4 MALE, FEMALE, BLACK LEVER HANDLE, CHROMED	1
GA4951060 GOLDACRES		AIR RESERVOIR ASSEMBLY, PRAIRIE PRO, 2021	REV 02

Check Valve Assembly, Air Reservoir

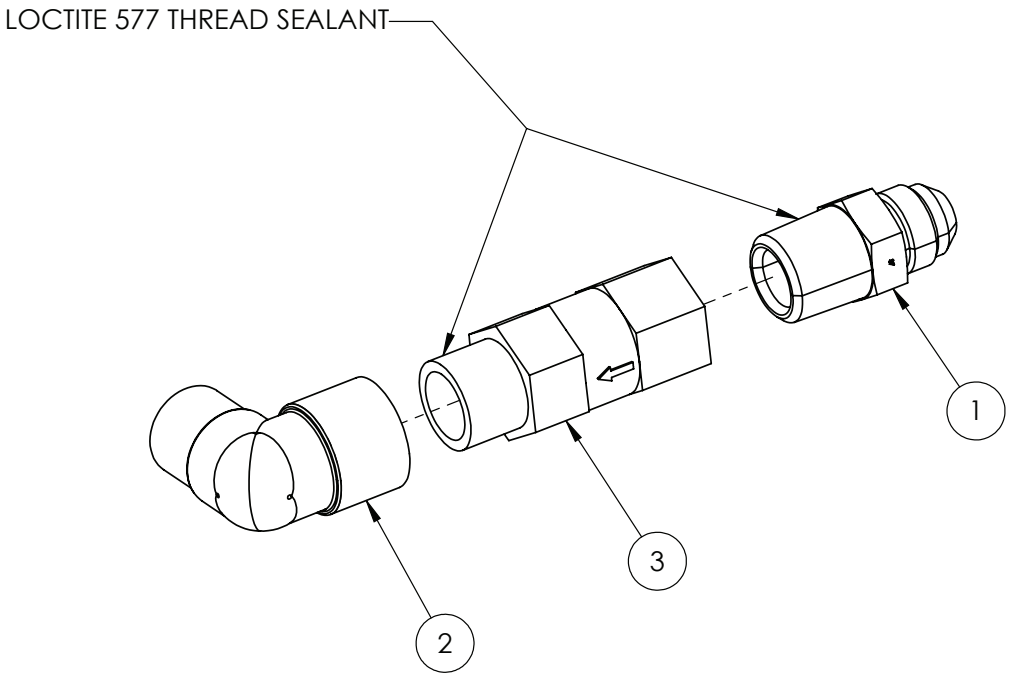

IF DESCRIPTION PREFIX IS ASSEMBLY DRAWING ONLY OR PRODUCTION DRAWING ONLY THE ITEM IS NOT FOR SALE			
ITEM	PART NUMBER	DESCRIPTION	QTY
1	GA3501103	HYDRAULIC ADAPTER, NIPPLE, 1/2" BSPT X 3/4" JIC MALE, S7-0812	1
2	GA5048150	PLUMBING ADAPTOR, ELBOW, 90 DEGREE, 1/2 MALE THREAD X 1/2 FEMALE THREAD, CAST	1
3	GA5014795	SC3 SINGLE CHECK VALVE 1/2 M/F	1
GA4909215 GOLDACRES		ASSEMBLY DRAWING ONLY, AIR RESERVOIR RH POD CHECK VALVE FITTINGS	REV 00.B

Transducer Assembly, Air Reservoir

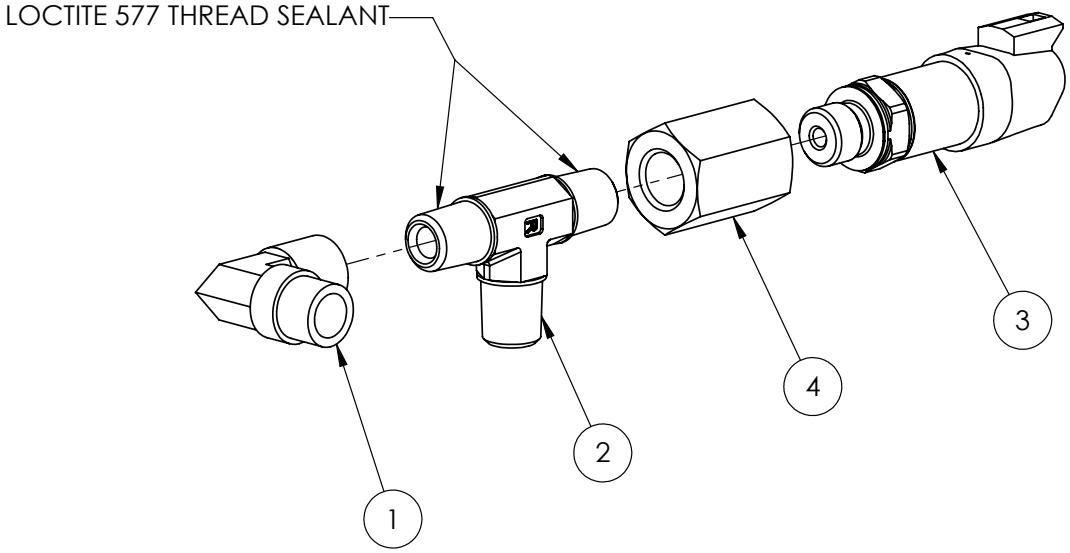

IF DESCRIPTION PREFIX IS ASSEMBLY DRAWING ONLY OR PRODUCTION DRAWING ONLY THE ITEM IS NOT FOR SALE			
ITEM	PART NUMBER	DESCRIPTION	QTY
1	GA5078519	AIR FITTING, ELBOW, 3/8" TUBE, 1/4" NPT FEMALE, PUSH IN, BRASS, ALKON AQ70-DOT-6X4	1
2	GA3500269	HYDRAULIC ADAPTOR, TEE, 1/4" BSPT MALE X 1/4" BSPT MALE X 1/4" BSPT MALE, S50-040404	1
3	GA3000316	PRESSURE SENSOR TRANSDUCER, 0-25 BAR, 0.5-4.5V, IFM	1
4	GA5015469	SOCKET 1/4 STAINLESS	1
GA4909210 GOLDACRES		ASSEMBLY DRAWING ONLY, AIR RESERVOIR TOP FITTINGS	REV 00.B

04 - Pumps

Pump, UDOR, Zeta 260, Parts Breakdown

REPLACEMENT PARTS			
ITEM	PART NUMBER	DESCRIPTION	QTY
-	GA5077792	PUMP REBUILD KIT, INCLUDES DIAPHRAGMS, SEALS & VALVES, SUITS, ZETA 260, RO250 AND ZETA 300 IN PTO AND HYD DRIVE, KIT-ZETA260-C	-
-	GA5077793	PUMP DIAPHRAGM KIT, SUIT ZETA 260, RO250 AND ZETA 300, UDOR PUMPS, KIT-ZETA260-D	-
-	GA5054505	PUMP, DIAPHRAGM TYPE, ZETA 260, THROUGH SHAFT PTO DRIVE, UDOR	-
-	GA5054500	PUMP ZETA 260 MI-1	-

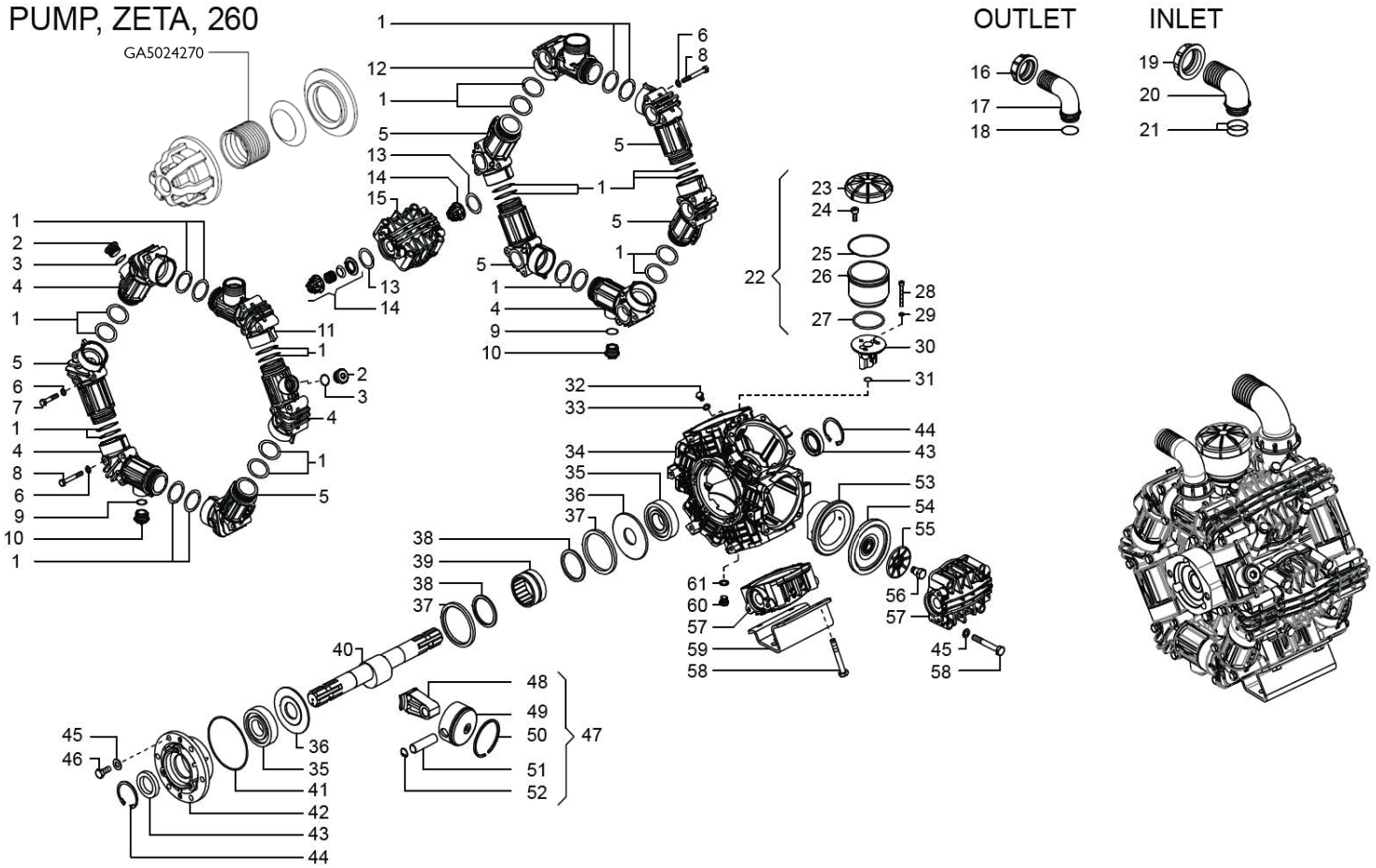

PARTS LIST ON FOLLOWING PAGE

GA5054500 GOLDACRES	PUMP ZETA 260 MI-1	REV 00

Diaphragm Pump, UDOR Zeta 260, Parts List

PUMP ZETA 260 MI-1					
ITEM	PART NUMBER	DESCRIPTION	ITEM	PART NUMBER	DESCRIPTION
1	GA5076101	O-RING D47,22X3,53 (RIF.4187), 1101G5	32	180483	BOLT, UDOR, 180483
2	GA5076518	PLUG, 3/4 MALE THREAD, UDOR, 160387	33	GA5076442	GASKET D8,5X14X1,5, 140312
3	GA5076080	O-RING D20,00X4 (RIF.2820), 110151	34	0209B5	CRANKCASE, ZETA 230/260/300, 0209B5
4	GA5076536	INLET-OUTLET HOSE G3/4 F ZETA 230/300, 160538	35	GA5075729	BEARING, SINGLE ROW BALL, 35 ID X 80 OD X 21, 6307, 021404
5	GA5076497	INLET-OUTLET HOSE ZETA 230/260/300, 160134	36	GA5075754	ROD DISC ZETA 170/200/260/300, 030128
6	GA5076443	WASHER D8,4X16X1,6 DACROMET, 140348	37	GA5075603	RETAINER RING "ZETA 170/260", 000108
7	GA5076557	BOLT, M8 X 50, DACROMET, UDOR, 180472	38	GA5075763	ROD SPACER "ZETA 230/260", 030259
8	GA5076560	BOLT, M8 X 70, DACROMET, UDOR, 180479	39	GA5075738	ROLLER BEARING D55X68X35 NK55-35, 021607
9	GA5076060	O RING, 20.63 X 2.62, 110104	40	GA5075607	SHAFT "BETA/ZETA 170/260" (9) TS 2C, 000229
10	GA5076512	PLUG G3/4, 160336	41	GA5076084	O RING, 2.5 X 110, 110158
11	GA5076535	OUTLET HOSE G11/2 M ZETA 230/260/300, 160537	42	0501L3	BEARING SUPPORT FLANGE, 0501L3
12	GA5076496	SUCTION HOSE G2 M ZETA 300, 160133	43	GA5075634	OIL SEAL, 35 ID X 55 OD X 10 THICK, 000749, 000702
13	GA5020060	O-RING, 40 X 3.5. 110101	44	GA5076457	SNAP RING D55, 150616
14	GA5077086	VALVE, CHECK, INLET / OUTLET, SUIT ZETA 140 / 200 / 300, 600677	45	140349	WASHER D10, UDOR, 140349
15	160474	HEAD ZETA 230/260, 160474	46	180499	BOLT, UDOR, 180499
16	GA5075797	FLY NUT, 1 1/2, HEAVY DUTY FOR USE ON SPRAY PUMPS, UDOR, 060450	47	GA5078353	ROD ASSY ZETA 260 D75, 601559
17	GA5076444	HOSE BARB, ELBOW, 90 DEGREE, RO / ZETA PUMP INLET / OUTLET , 140688	48	151933	CONNECTING ROD, SUIT 260 PUMP, UDOR, 151933
18	GA5076075	O RING, 32.00 X 3.0, 110142	49	GA5076387	ALUMINIUN PLUNGER D75 BETA/OMEGA/ZETA, 120508
19	GA5075795	FLY NUT, 2, UDOR, 060439	50	GA5076459	RING, PISTON, D75X3X3, 150905
20	GA5075689	HOSE BARB, ELBOW, 90 DEGREE, 50MM BARB X FLY NUT END, UDOR, 020279	51	GA5076449	PIN D18X64, 150201
21	GA5024235	O RING, 32.98 X 3.53, 110108	52	GA5076455	SNAP RING D18, 150602
22	GA5077101	OIL RESERVOIR, ASSEMBLY SUIT ZETA 230, 260, 300 PUMPS, UDOR, 603302	53	GA5075701	SLEEVE, PISTON BORE, DIAMETER 75, SUIT ZETA 120 / 170 / 260, UDOR, 020614
23	GA5075710	OIL RESERVOIR COVER BETA, 020822	54	GA5075998	DIAPHRAGM, PUMP PISTON, DIAMETER 115.4, ZETA PUMP, 090361,090359
24	GA5076565	ALLEN SCREW M8X20 UNI5931, 180506	55	GA5075749	WASHER, PUMP DIAPHRAGM RETAINER, SUIT ZETA 120 / 150, RO 320, 030107
25	GA5076073	O RING, 83.00 X 2.5, 110132	56	GA5075658	BOLT, SUIT PUMP DIAPHRAGM, KAPPA / ZETA PUMPS, UDOR, 010201
26	GA5076380	OIL RESERVOIR, SUIT BETA / OMEGA PUMP, UDOR, 120349	57	160474	HEAD, ZETA, 160474
27	GA5076089	O RING, 60.33 X 3.53, 110168	58	GA5076562	BOLT, M10 X 75, DACROMET, UDOR, 1804A2
28	180571	ALLEN SCREW M6X30 UNI5931 DACROMET, 180571	59	GA5078301	BASE PLATE ZETA 230/260/300, 120298
29	GA5078304	BONDED WASHER D6,7X10X1, 141203	60	GA5076514	PLUG G1/4, 160367
30	0501H9	OIL RESERVOIR BASE, 0501H9	61	GA5075800	SEAL, RUBBER, 13 X 19 X 1.5, SUIT DIAPHRAGM PUMP OIL PLUG, UDOR, 060549
31	GA5076082	O-RING D12,37X2,62 (RIF.3050), 110156			

GA5054500 GOLDACRES	PUMP ZETA 260 MI-1	REV

Pump, MSP400, Breakdown

REPLACEMENT PARTS			
ITEM	PART NUMBER	DESCRIPTION	QTY
-	GA2000640	PUMP, (PUMP ONLY) MULTISTAGE CENTRIFUGAL, 2" FP FLANGE INLET, 2" SP FLANGE OUTLET, ARAG MP400	-

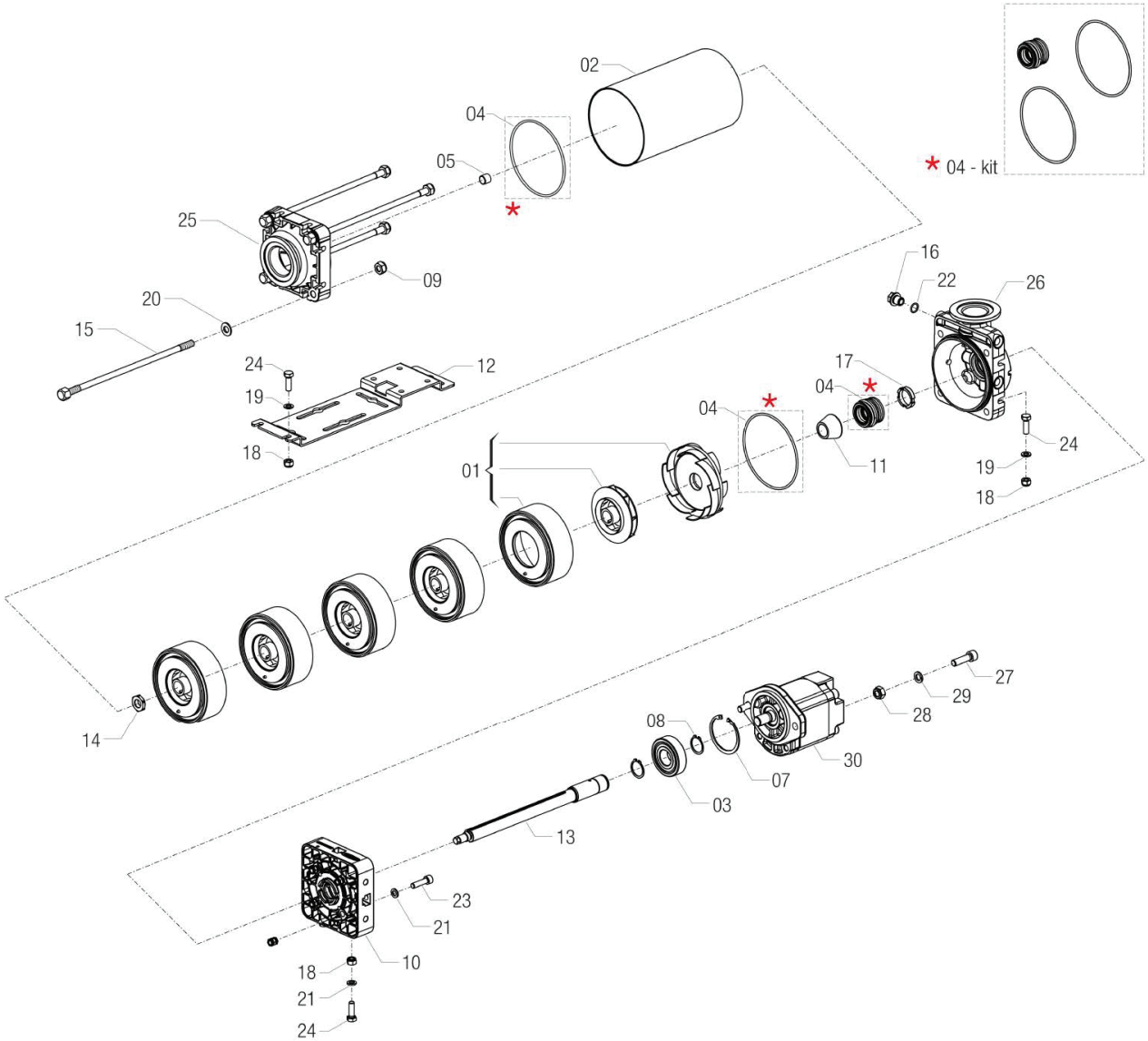

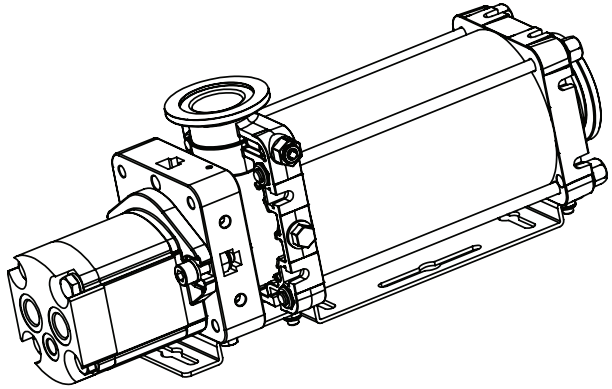

^ PARTS LIST ON FOLLOWING PAGE

GA2000123 GOLDACRES	PUMP, MULTISTAGE CENTRIFUGAL, HYDRAULIC DRIVE, 2" FP FLANGE INLET, 2" SP FLANGE OUTLET, ARAG MP400	REV 00

ARAG MSP400 PUMP

01	GA5073640	IMPELLER ASSEMBLY, HYDRAULIC PUMP, MP400/MSP400, ARAG, 970002.510	25	GA2000191	FLANGE, INLET, 220 2" FP, MP400, ARAG, 970000.145
02	GA2000182	PUMP TUBE COVER, MSP400, ARAG, 970050.04	26	GA5074345	T6F ADAPTOR HOUSING, PUMP, ARAG, MSP400
03	GA5078740	RADIAL BALL BEARING, 6305-2RS, SUIT, ARAG, MSP400, 970000.061	27	GA5078757	SCREW, TCEI, 10X35, INOX UNI5931, SUIT, ARAG, MSP400 PUMP, V1C26M
04	GA5073620	SEAL KIT, MECHANICAL SPRING SEAL AND 2 X MAIN HOUSING O RINGS, MP400 MSP400, ARAG, 970000.503	28	GA5078744	SELF-LOCKING NUT M10 INOX UNI7474, SUIT, ARAG, MSP400, B12261
05	GA2000183	SPACER, MSP400, ARAG, 970000.081	29	GA5078758	WASHER, GROVER, 10.5X17.5X2.2 INOX, SUIT, ARAG, MSP400 PUMP, B222J0
07	GA2000184	CIRCLIP INNER, MSP400, ARAG, B332Z2	30	GA5073645	PUMP MOTOR, HYDRAULIC PUMP, ARAG, 9700000.100, CASAPPA & WALVOIL BRANDS
08	GA2000185	CIRCLIP OUTER, MSP400, ARAG, B322X1		GA3501267	SEAL, OIL, 18 X 30 X 7mm, MSP400 MOTOR SHAFT, GA5073645, "CASAPPA BRAND ONLY"
09	GA5078744	SELF-LOCKING NUT M10 INOX UNI7474, SUIT, ARAG, MSP400, B12261	31	GA5078761	O-RING, 3,00X12,00, NBR, SUIT, ARAG, MSP400 PUMP, G11094NB
10	GA2000186	BEARING SUPPORT, MSP400, ARAG, 970000.06	32	GA5078763	DUST SEAL, SUIT, HYDRAULIC MOTOR, ARAG, MSP400 PUMP, 970000.062
11	GA5073625	BUSH, HYDRAULIC PUMP, MP400/MSP400, ARAG, 970000.080	33	GA5078762	STRAIGHT FITTING, G1/4"M AR D.8, SUIT, ARAG, MSP400 PUMP, 10320C08
12	GA5078745	BRACKET, FIXING, SUIT, ARAG, MSP400, 970050.090			
13	GA5078746	SHAFT, SUIT, ARAG, MSP400 PUMP, 5S COMPLETE, 970050.050			
14	GA5078747	BOLT, IMPELLER, TIGHTENING, SUIT, ARAG, MSP400, 970000.082			
15	GA5078748	FIXING SCREW, 10X268MM S/S, SUIT, ARAG, MSP400 PUMP, 970050.091			
16	GA5078749	PLUG, 1/4"M, SUIT, ARAG, MSP400 PUMP, 970000.084			
17	GA5073630	RETAINER SEAL, HYDRAULIC PUMP, MP400/MSP400, ARAG, 970000.083			
18	GA5078750	NUT, SELF LOCKING, M8, INOX UNI7474, SUIT, ARAG, MSP400 PUMP, B12251			
19	GA5078751	WASHER, FLAT, 8.4X15X1.5 INOX, SUIT, ARAG, MSP400 PUMP, B202H0			
20	GA5078752	WASHER, FLAT, D10.5X21X2, INOX, SUIT, ARAG, MSP400, B202J0			
21	GA5078753	WASHER, GROVER, D 8.2 INOX UNI1751, SUIT, ARAG, MSP400 PUMP, B222H0			
22	GA2000188	O-RING, 1.78 X 12.42 mm, VITON, MSP400, ARAG, G11015V			
23	GA5078755	SCREW, TCEI, 8X30, INOX UNI5931, SUIT, ARAG, MSP400 PUMP, V1C25L			
24	GA5078756	SCREW, TE, 8X25 INOX			

GA2000123 GOLDACRES	PUMP, MULTISTAGE CENTRIFUGAL, HYDRAULIC DRIVE, 2" FP FLANGE INLET, 2" SP FLANGE OUTLET, ARAG MSP400	REV 00

Hypro Fill Pump

REPLACEMENT PARTS			
ITEM	PART NUMBER	DESCRIPTION	QTY
-	GA2000146	PUMP, FILL, 3", HYDRAULICALLY DRIVEN, HYPRO	-
-	GA3501145	SEAL, KIT, FILL PUMP HYDRAULIC MOTOR, GA3500933, MODEL G6, "NO CASE DRAIN", ALM2A-S-16-S2-P696	-
-	GA3501661	SEAL, REPAIR KIT, FILL PUMP HYDRAULIC MOTOR, GA3500933, MARZOCCHI MODEL WITH CASE DRAIN, ALM2A-S-16-S2-E2-P696	-
-	GA2000403	SEAL KIT, COMPLETE, 3" FILL PUMP, GA2000146, 3430-0757	-
-	GA5018736	REPAIR KIT, SUIT WET END OF HYPRO LIQUID PUMP	-

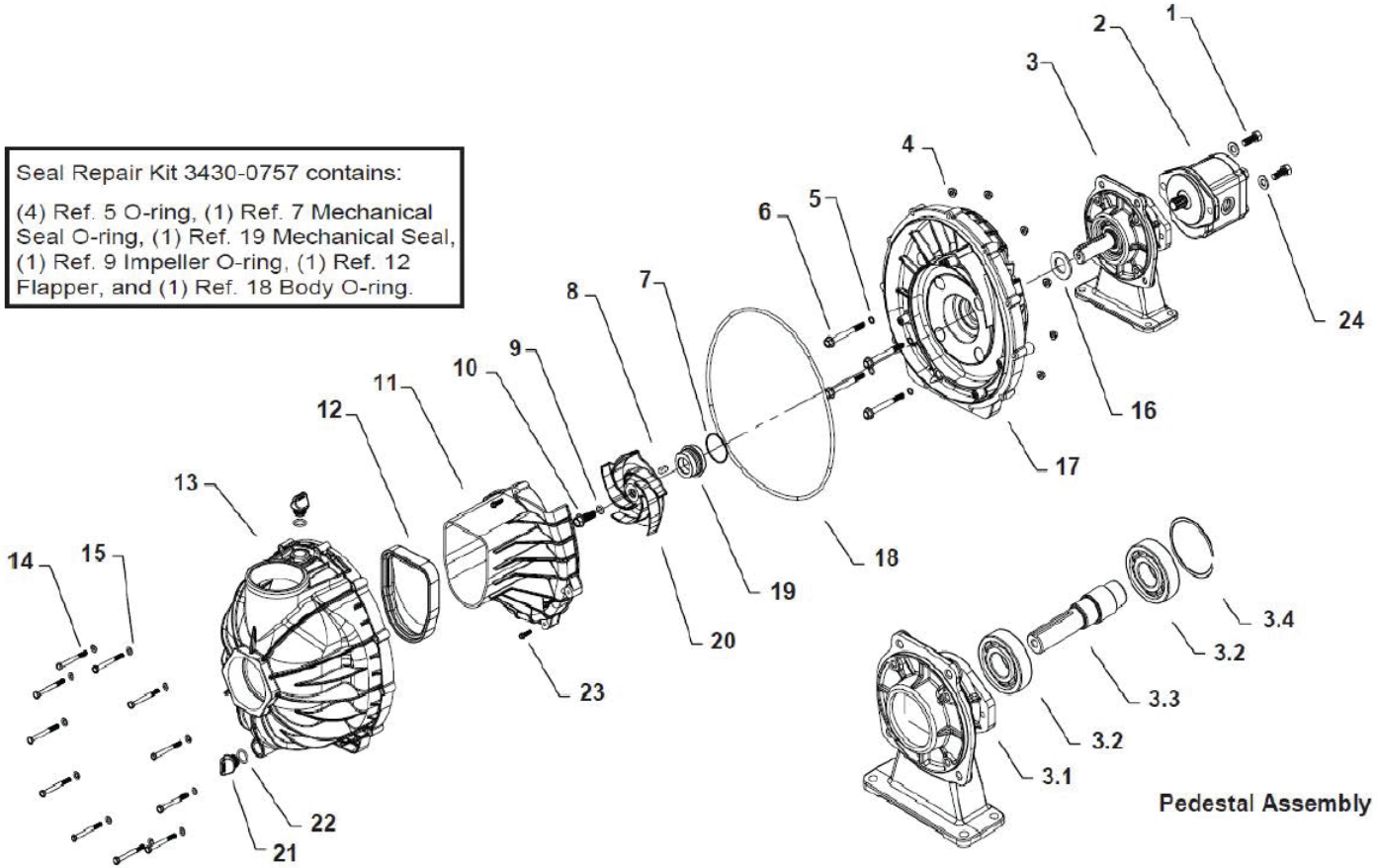

^ PARTS LIST ON FOLLOWING PAGE

GA2000146 GOLDACRES	HYPRO FILL PUMP, PARTS BREAKDOWN	REV 00

HYPRO FILL PUMP PART LIST

01	GA0500200	SHCS, 3/8 UNC X 1", SS	A	GA3501145	SEAL, REPAIR KIT, FILL PUMP HYDRAULIC MOTOR, GA3500933
02	GA3500933	HYDRAULIC MOTOR, 11.5CC, WITH CASE DRAIN, FILL PUMP, HYPRO	B	GA2000403	SEAL KIT, COMPLETE, 3" FILL PUMP, GA2000146, 3430-0757
03	GA5078785	PEDASTAL ASSY, SPLINE SHAFT, SUIT, HYPRO FILL PUMP, 9343 SERIES, 0751-9343	C	GA5018736	REPAIR KIT, SUIT WET END OF HYPRO LIQUID PUMP
04	GA5078786	FLANGE NUT, HEX, SUIT, HYPRO PUMP, SERIES 9343, 2250-0087			
05	GA2000403	SEAL KIT, COMPLETE, 3" FILL PUMP, GA2000146, 3430-0757			
06	GA5078788	BOLT, HEX FLANGE, SUIT, HYPRO PUMP, 9343 SERIES, 2210-0182			
07	GA2000403	SEAL KIT, COMPLETE, 3" FILL PUMP, GA2000146, 3430-0757			
08	GA5078790	KEY WAY, SUIT, HYPRO PUMP, SERIES 9343, 1610-0069			
09	GA2000403	SEAL KIT, COMPLETE, 3" FILL PUMP, GA2000146, 3430-0757			
10	GA5078792	BOLT, FLANGED HEX, SUIT, HYPRO PUMP, SERIES 9343, 2210-0181			
11	GA5078793	PUMP VOLUTE, SUIT, HYPRO PUMP, SERIES 9343, 0150-0154P			
12	GA2000403	SEAL KIT, COMPLETE, 3" FILL PUMP, GA2000146, 3430-0757			
13	GA2000328	HOUSING, FILL PUMP, FRONT, 3", PENTAIR			
14	GA5004097	BOLT M6 X 60 GR8.8 ZP			
15	GA5004437	WASHER M6 FLAT SS			
16	GA5078797	SLINGER RING, SUIT, HYPRO PUMP, SERIES 9343, 1410-0091			
17	GA2000329	HOUSING, FILL PUMP, REAR, 3", PENTAIR			
18	GA2000403	SEAL KIT, COMPLETE, 3" FILL PUMP, GA2000146, 3430-0757			
19	GA2000403	SEAL KIT, COMPLETE, 3" FILL PUMP, GA2000146, 3430-0757			
20	GA2000404	IMPELLER, 3" FILL PUMP, GA2000146, 0400-1543P			
21	GA5078800	FILL/DRAIN PLUG, SUIT, HYPRO PUMP, SERIES 9343, 2404-0350P			
22	GA5078801	O-RING, FILL PLUG, SUIT, HYPRO PUMP, SERIES 9343, 1720-0230			
23	GA5078802	WASHER, HEX, HEAD SCREW, SUIT, HYPRO PUMP, SERIES 9343, 2210-0183			
24	GA5002565	WASHER 3/8" X 1" FLAT SS			

GA2000146 GOLDACRES	HYPRO FILL PUMP, PARTS LIST	REV 00

Graco Fill Pump

REPLACEMENT PARTS			
ITEM	PART NUMBER	DESCRIPTION	QTY
A	GA2000330	SEAL KIT, AIR VALVE, GRACO CHEMICAL TRANSFER PUMP, GA2000152	-
B	GA2000363	SEAL KIT, DIAPHRAGMS AND O-RINGS, GRACO CHEMICAL TRANSFER PUMP, GA2000152	-

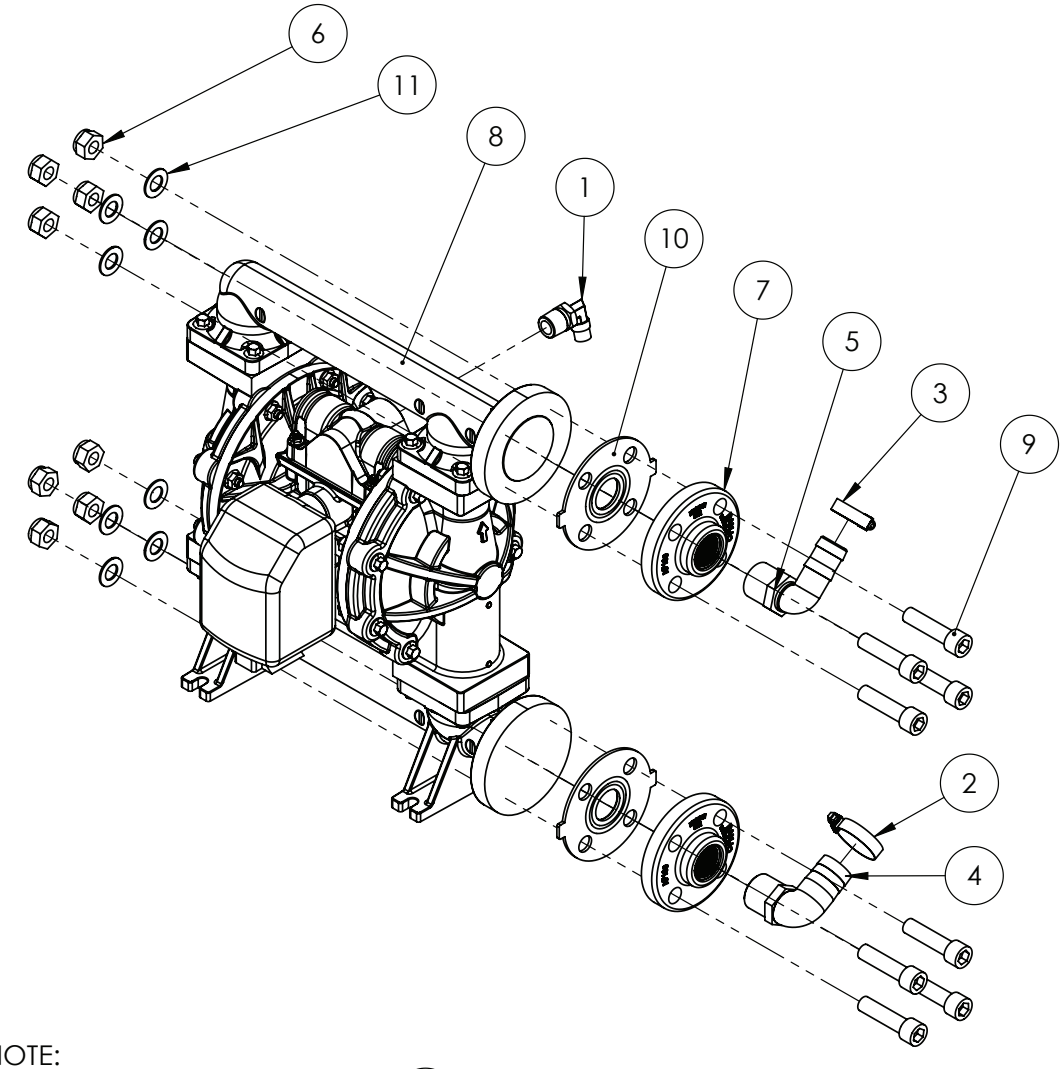

NOTE:

TORQUE FASTENERS ITEMS 6 9 TO 20 N.M

IF DESCRIPTION PREFIX IS ASSEMBLY DRAWING ONLY OR PRODUCTION DRAWING ONLY THE ITEM IS NOT FOR SALE			
ITEM	PART NUMBER	DESCRIPTION	QTY
1	GA5078524	AIR FITTING, ELBOW, SWIVEL, 3/8" TUBE, 1/2" NPT MALE, PUSH IN, BRASS, ALKON - AQ69-DOTS-6X8	1
2	GA5002783	HOSE CLAMP, 1 1/4, SS (30-45/13W)	1
3	GA5001681	HOSE CLAMP, 1" SS (20-32/12W)	1
4	GA5077720	HOSE BARB, ELBOW, 90 DEGREE, 1 MALE THREAD X 1 1/4 HOSE, BANJO	1
5	GA5077723	HOSE BARB, ELBOW, 90 DEGREE, 1" MALE X 1" HOSE, BANJO	1
6	GA5012427	NUT M14 NYLOC ZP	8
7	GA2000150	PLUMBING FITTING, ANSI FLANGE TO 1" FEMALE NPT THREAD, AF100, BANJO	2
8	GA2000152	PUMP, CHEMICAL TRANSFER, DIAPHRAGM, SIDE PORTED, GRACO HUSKY 1050P-	1
9	GA0500100	SHCS M14 X 55, ZP, GR 12.9	8
10	GA2000151	SEAL, 1" ANSI FLANGE, AF100G, BANJO	2
11	GA5050325	WASHER 14mm FLAT SS	8
GA4909225 GOLDACRES	PRODUCTION DRAWING ONLY, CHEMICAL PUMP, GRACO HUSKY, PRARIE PRO, MY21		REV 00.A

05 - Tanks

500L, Rinse Tank, 5000L & 6500L

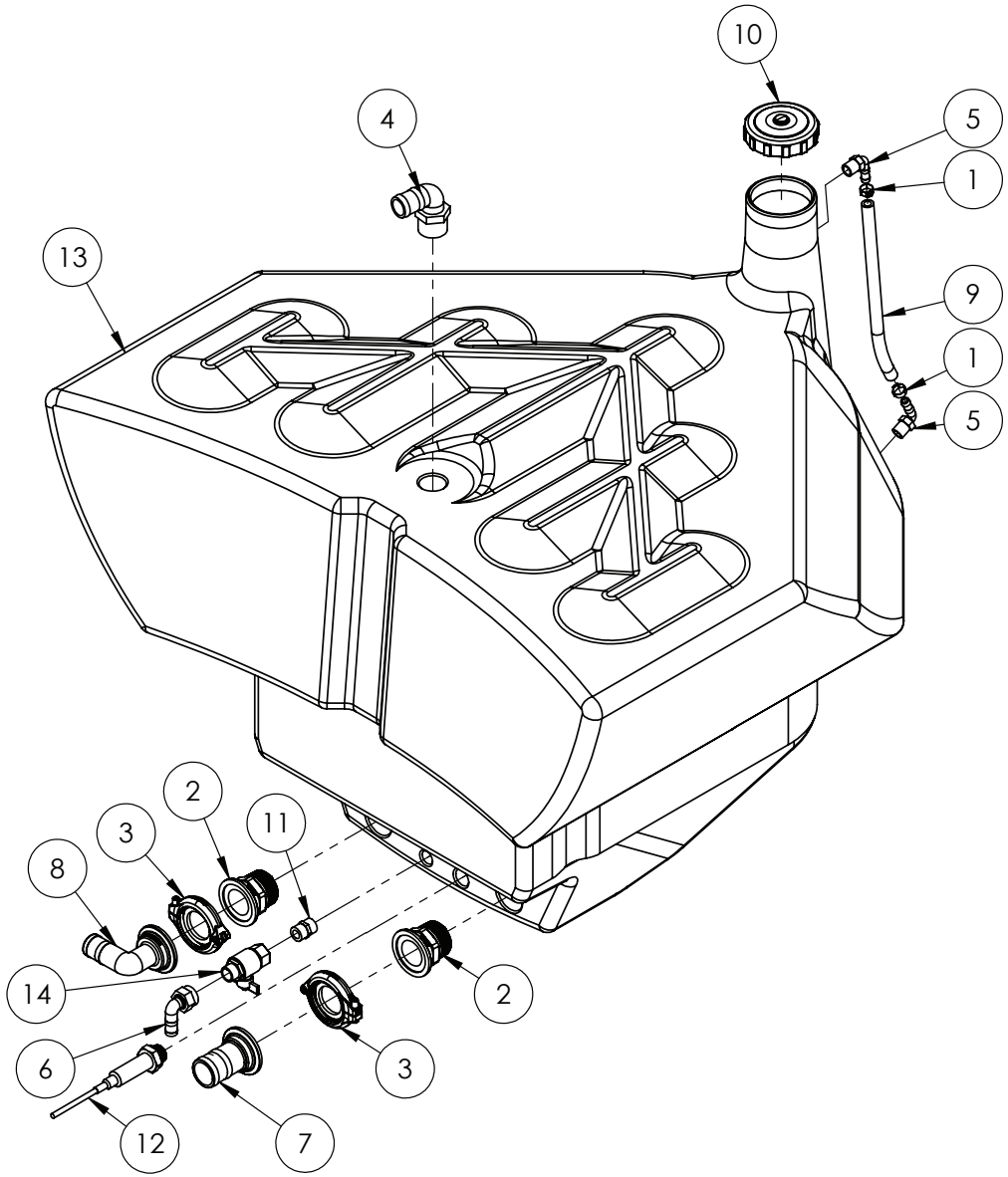

IF DESCRIPTION PREFIX IS ASSEMBLY DRAWING ONLY OR PRODUCTION DRAWING ONLY THE ITEM IS NOT FOR SALE			
ITEM	PART NUMBER	DESCRIPTION	QTY
1	GA5007231	COBRA CLAMP 15/8 W4 VPE, 108 7006 015	2
2	GA5077866	COUPLING, 2" FULL PORT FLANGE X 2" MALE THREAD, BANJO	2
3	GA2000115	FLANGE CLAMP, AND GASKET, 2", SERIES 220, HYPRO	2
4	GA5077736	HOSE BARB, ELBOW, 90 DEGREE, 1 1/2" MALE THREAD X 1 1/2" HOSE, BANJO	1
5	GA5077708	HOSE BARB, ELBOW, 90 DEGREE, 1/2 MALE THREAD X 1/2 HOSE, BANJO, HB050-90	2
6	GA5077746	HOSE BARB, ELBOW, 90 DEGREE, 3/4 FEMALE THREAD X 3/4 HOSE, BANJO, HBF075-90	1
7	GA5077859	HOSE BARB, STRAIGHT, 2 FLANGE X 2 HOSE, BANJO	1
8	GA5077856	HOSE BARB, 2" FP FLANGE, 1-1/2" HB, 90 DEGREE	1
9	GA2000209	HOSE, CLEAR, 12mm, SIGHT TUBE, HOS12SIGHT	0.39
10	GA5076885	LID, DIAMETER 113, WITH BREATHER	1
11	GA5077913	NIPPLE, 3/4 MALE X 3/4 MALE, SHORT, BANJO	1
12	GA3000317	PRESSURE SENSOR, 0 - 0.4 BAR, GTS GAUGES	1
13	GA8500030	TANK, 500L, RINSE, TRAILING SPRAYER	1
14	GA5018315	VALVE, BALL, 20mm, 3/4" MALE, FEMALE, BLACK BUTTERFLY HANDLE, BRASS	1
GA4950000 GOLDACRES		TANK ASSEMBLY, 500L, RINSE, TRAILING SPRAYER	REV 00

800L, Rinse Tank, 8500L & 10,000L

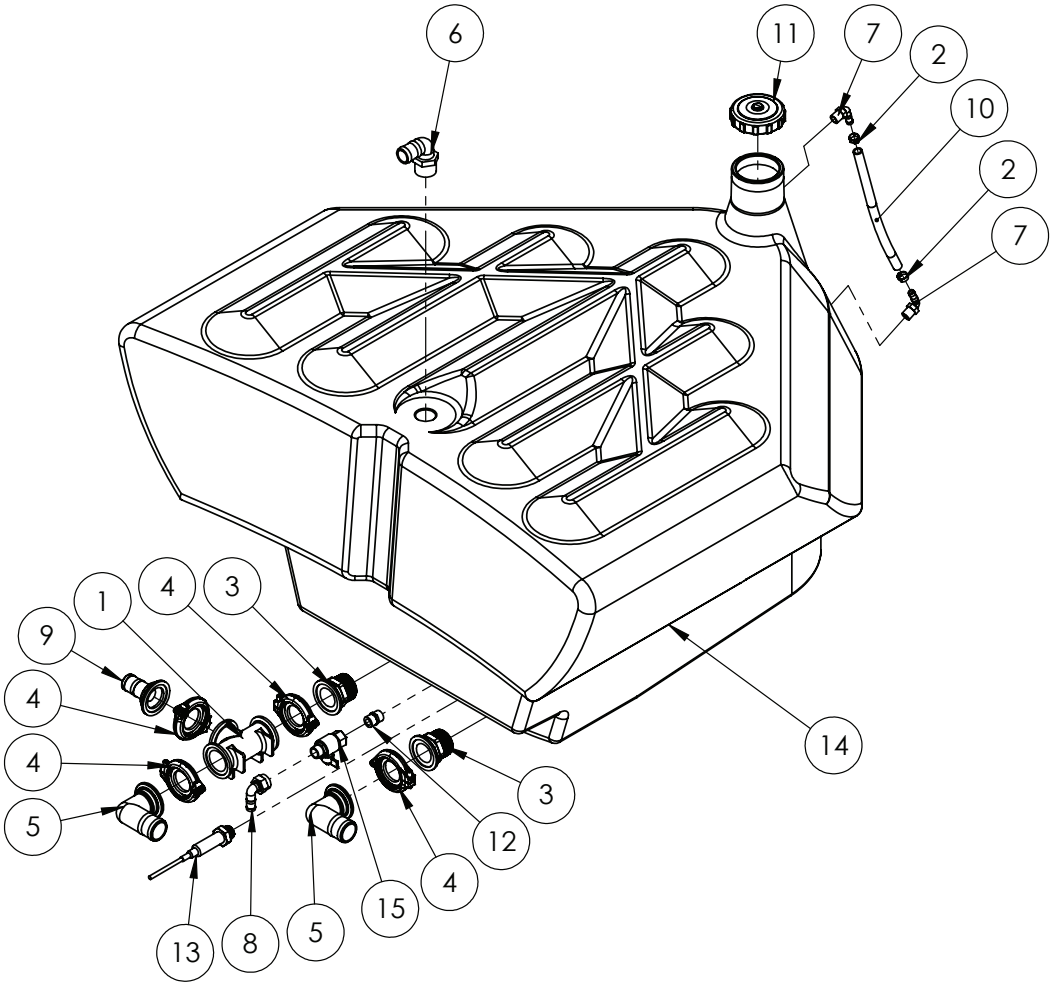

IF DESCRIPTION PREFIX IS ASSEMBLY DRAWING ONLY OR PRODUCTION DRAWING ONLY THE ITEM IS NOT FOR SALE			
ITEM	PART NUMBER	DESCRIPTION	QTY
1	GA5077868	2 MANIFOLD TEE - 220 SERIES	1
2	GA5007231	COBRA CLAMP 15/8 W4 VPE, 108 7006 015	2
3	GA5077866	COUPLING, 2" FULL PORT FLANGE X 2" MALE THREAD, BANJO	2
4	GA2000115	FLANGE CLAMP, AND GASKET, 2", SERIES 220, HYPRO	4
5	GA5077860	HOSE BARB, ELBOW, 2 FP FLANGE X 2 HB 90 DEGREE	2
6	GA5077736	HOSE BARB, ELBOW, 90 DEGREE, 1 1/2" MALE THREAD X 1 1/2" HOSE, BANJO	1
7	GA5077708	HOSE BARB, ELBOW, 90 DEGREE, 1/2 MALE THREAD X 1/2 HOSE, BANJO, HB050-90	2
8	GA5077746	HOSE BARB, ELBOW, 90 DEGREE, 3/4 FEMALE THREAD X 3/4 HOSE, BANJO, HBF075-90	1
9	GA2000047	HOSE BARB, FLANGE, STRAIGHT, 2" FLANGE X 1 1/2" HOSE, BANJO	1
10	GA2000209	HOSE, CLEAR, 12mm, SIGHT TUBE, HOS12SIGHT	0.41
11	GA5076885	LID, DIAMETER 113, WITH BREATHER	1
12	GA5077913	NIPPLE, 3/4 MALE X 3/4 MALE, SHORT, BANJO	1
13	GA3000317	PRESSURE SENSOR, 0 - 0.4 BAR, GTS GAUGES	1
14	GA8500029	TANK, 800L, RINSE, TRAILING SPRAYER	1
15	GA5018315	VALVE, BALL, 20mm, 3/4" MALE, FEMALE, BLACK BUTTERFLY HANDLE, BRASS	1
GA4949995 GOLDACRES		TANK ASSEMBLY, 800L, RINSE, TRAILING SPRAYER, WITH AGITATION PUMP.	REV 00

Rinse Tank, Mounting

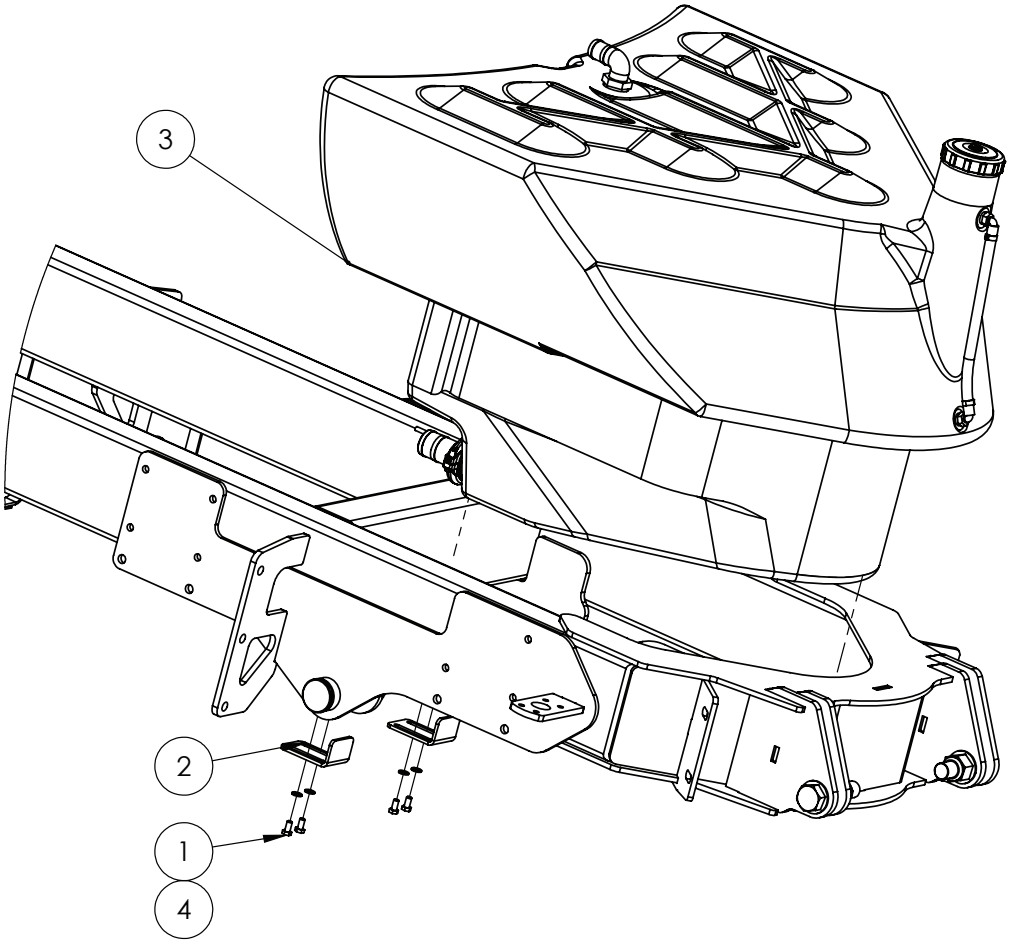

IF DESCRIPTION PREFIX IS ASSEMBLY DRAWING ONLY OR PRODUCTION DRAWING ONLY THE ITEM IS NOT FOR SALE			
ITEM	PART NUMBER	DESCRIPTION	QTY
1	GA5006113	BOLT M10 X 20 GR8.8 ZP	4
2	GA4410700	PLATE, TANK STOP, RINSE TANK STOP, PRAIRIE PRO, 2021	2
3	GA4950000	TANK ASSEMBLY, 500L, RINSE, TRAILING SPRAYER	1
4	GA5000117	WASHER 10mm FLAT SS HD	4
GA7800038 GOLDACRES		RINSE TANK MOUNTING, PRAIRIE PRO SERIES 2	REV 00

Main Tank, 5000L

ITEM	PART NUMBER	DESCRIPTION	FRONT	REAR
-	GA5003859	STRAP, TANK, 50mm, GOLDACRES BRANDED, (75M/ROLL) (PRICE IS PER METER)	4.57m	2.35m

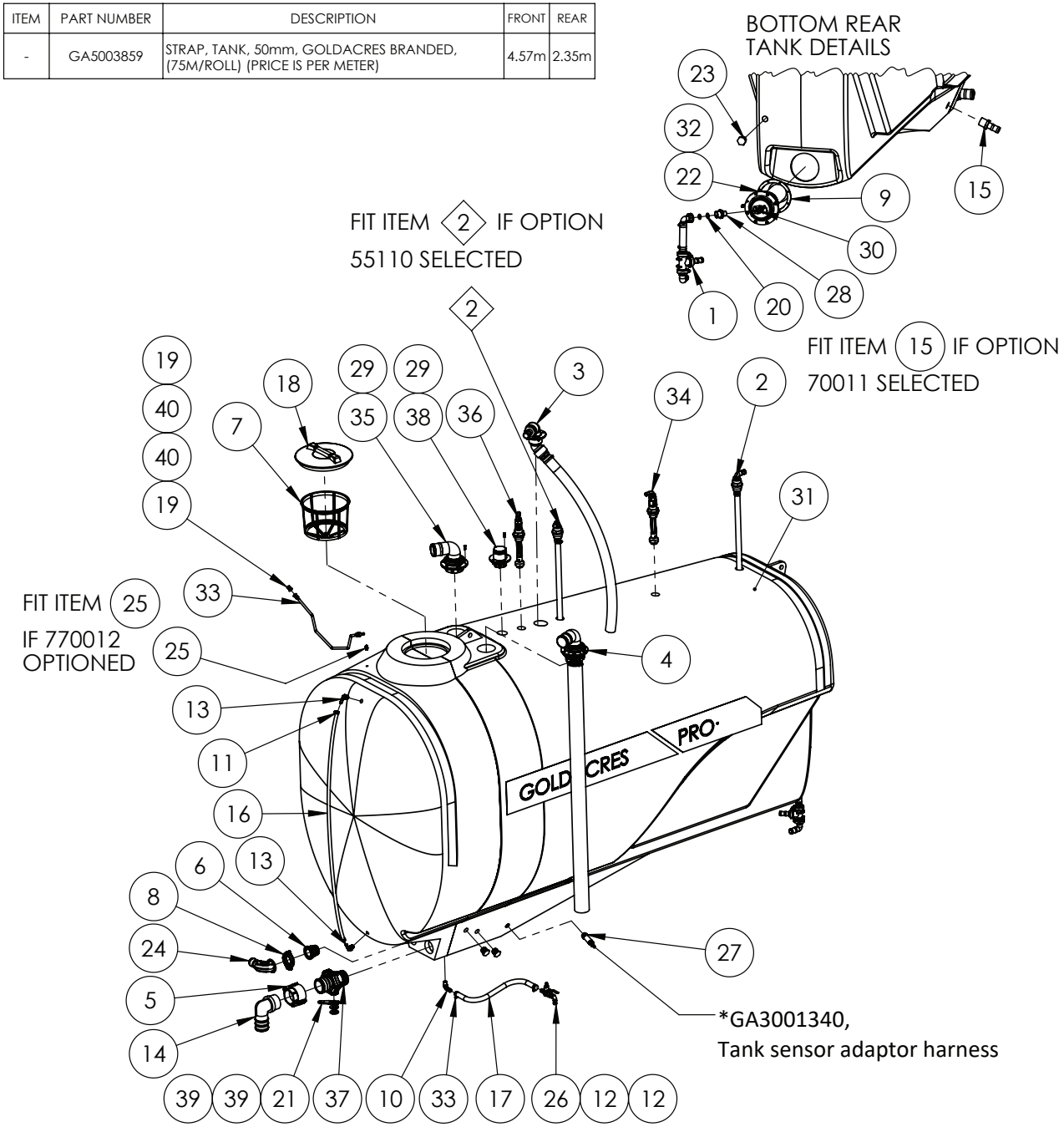

IF DESCRIPTION PREFIX IS ASSEMBLY DRAWING ONLY OR PRODUCTION DRAWING ONLY THE ITEM IS NOT FOR SALE			
ITEM	PART NUMBER	DESCRIPTION	QTY
1	GA4909230	ASSEMBLY DRAWING ONLY, TANK BOTTOM FITTINGS, PRAIRIE PRO, MY21	1
2	GA4909035	ASSEMBLY DRAWING ONLY, TANK, INLET, 1" HOSE	2
3	GA4909045	ASSEMBLY DRAWING ONLY, 2" INLET, HOPPER, 45°	1
4	GA4909125	ASSEMBLY DRAWING ONLY, 3" FILL	1
5	GA5076720	CAM LEVER, 3 FEMALE COUPLING X 3 FEMALE THREAD, BANJO - NSPT THREAD	1
6	GA5077866	COUPLING, 2" FULL PORT FLANGE X 2" MALE THREAD, BANJO	1
7	GA5076714	FILTER, BASKET TYPE, DIAMETER 305 X 245 DEEP, SUIT MAIN SPRAY TANK	1
8	GA2000115	FLANGE CLAMP, AND GASKET, 2", SERIES 220, HYPRO	1
9	GA5078839	GASKET, EPDM, SUPERMIX AGITATOR MOUNT, MY22	1
10	GA5077704	HOSE BARB ELBOW 1/2" THREAD 3/4" BARB	1
11	GA5000469	HOSE CLAMP, 1/2" SS 12-20/9W3	2
12	GA5000999	HOSE CLAMP, 3/4" SS (16-27/12W)	2
13	GA5077708	HOSE BARB, ELBOW, 90 DEGREE, 1/2 MALE THREAD X 1/2 HOSE, BANJO	2
14	GA5077742	HOSE BARB, ELBOW, 90 DEGREE, 3" MALE THREAD X 3" HOSE, BANJO	1
15	GA5077724	HOSE BARB, STRAIGHT, 1 1/4" MALE THREAD X 1 1/4" HOSE, BANJO	1
16	GA2000209	HOSE, CLEAR, 12mm, SIGHT TUBE, HOS12SIGHT	1.7
17	GA2000216	HOSE, PRESSURE, 20mm, BLACK 250PSI, HOS20P, SOLD PER METER	-
18	GA5076880	LID, BLACK, WITHOUT BREATHER, MEDIUM, DIAMETER 355, ARAG	1
19	GA5000581	NUT M12 HEX SS	4
20	GA5077675	O RING, 20.24 X 2.62, EPDM, G10041	2
21	GA4400290	PLATE, REMOTE VALVE TAP LINK, 3" DRAIN, G8	1
22	GA4412085	PLATE, SUPER MIX AGITATOR MOUNT, FLANGE BRACKET, ALL, MY22	1
23	GA5077945	PLUG, 1 MALE THREAD, BANJO	3
24	GA2000071	PLUMBING FITTING, SWEEP ELBOW, 90, 2" FLANGE TO 2" BARB, M220BRBSWP90, BANJO	1
25	GA5052690	PNEUMATIC FITTING, ELBOW, 90 DEGREE, 1/4 BSP MALE X 8mm PUSH TYPE, METAL	1
26	GA4903097	PRE-ASSEMBLED SUMP DRAIN ALL MODELS	1
27	GA3001158	SENSOR, PRESSURE TRANSMITTER, 4-20MA, 1" M, 0 TO 0.4 BAR, M12, IFM PM1718	1
28	GA5078324	REDUCER, MALE 1" TO MALE 3/4", ARAG, 2402043	1
29	GA5000527	SCREW PAN HEAD 12G X 25mm SS	10
30	GA4908705	SUPER MIX AGITATOR ASSEMBLY, NO BYPASS FITTING.	1
31	GA4951240	TANK 5000L, PRAIRIE PRO, 2021 WITH HOLES	1
32	GA0500139	TANK AGITATOR SCREW, SELF TAPPING, 14G X 30mm, SS 304	8
33	GA4672885	TANK SUPPORT BAR SUIT EF TANKS	1
34	GA4901285-1	TANK, FLUSHING NOZZLE (ELBOW) CAM ADAPTOR	1
35	GA4907845	TANK, OVERFLOW, ASSEMBLY, 3"	1
36	GA4901285-2	TANK, RINSING NOZZLE, ASSEMBLY WITH TEE CAM ADAPTOR	1
37	GA5078204	VALVE, BALL, 3", MALE NPT, MALE CAM LOCK, STUBBLY, LONG HANDLE, BANJO, VSFMT300	1
38	GA4902820	VALVE, BREATHER, ASSEMBLY	1
39	GA5017681	WASHER 1 X 2 7G FLAT THIN SS	2
40	GA5000577	WASHER 12mm FLAT SS HD	4
GA6101040 GOLDACRES		TANK, MAIN ASSEMBLY, CONFIG, 5000L, PRAIRIE PRO, 2021	REV 06

Main tank, 6500L

ITEM	PART NUMBER	DESCRIPTION	FRONT	REAR
-	GA5003859	STRAP, TANK, 50mm, GOLDACRES BRANDED, (75M/ROLL) (PRICE IS PER METER)	4.57m	2.35m

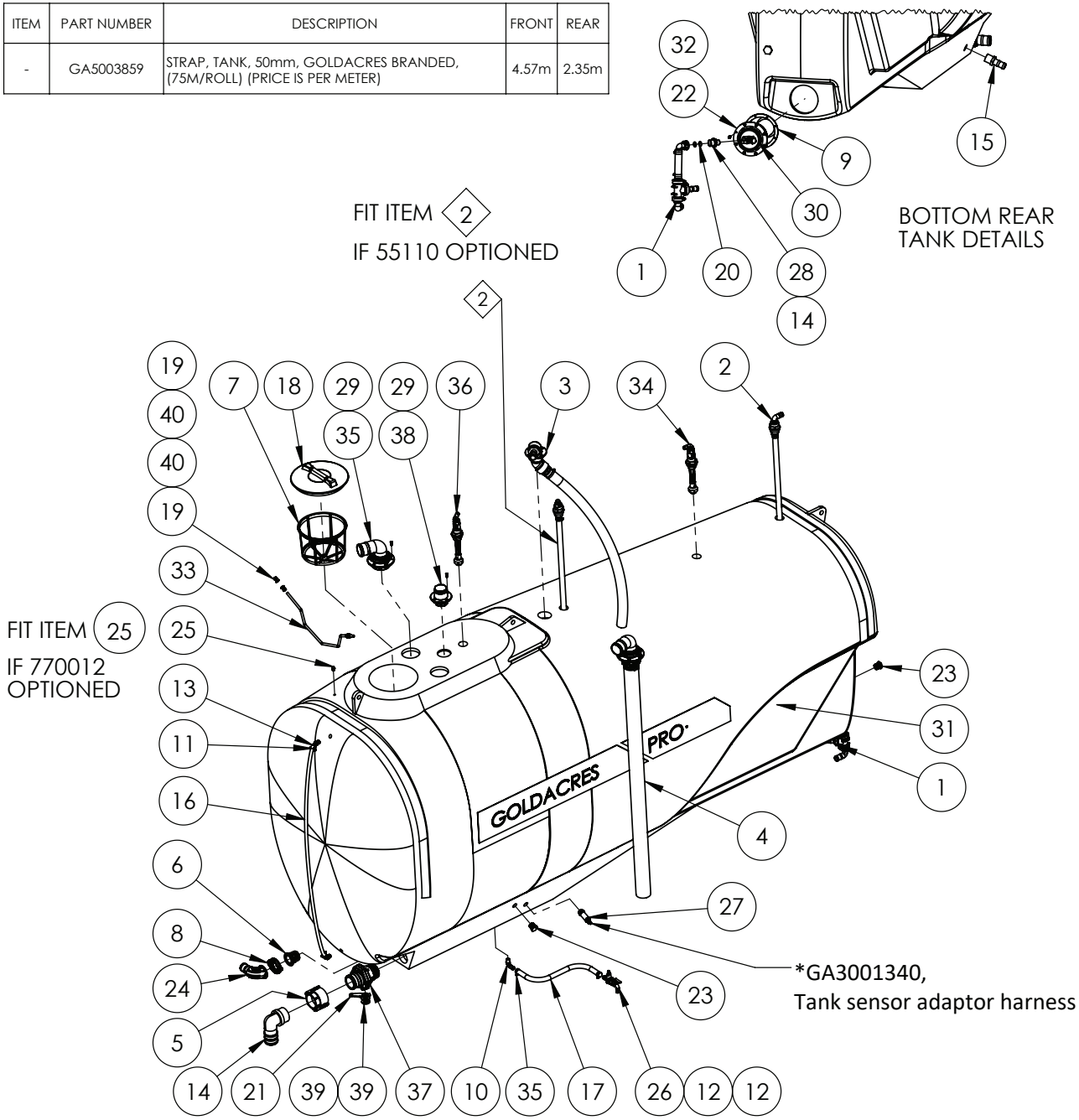

IF DESCRIPTION PREFIX IS ASSEMBLY DRAWING ONLY OR PRODUCTION DRAWING ONLY THE ITEM IS NOT FOR SALE			
ITEM	PART NUMBER	DESCRIPTION	QTY
1	GA4909230	ASSEMBLY DRAWING ONLY, TANK BOTTOM FITTINGS, PRAIRIE PRO, MY21	1
2	GA4909035	Assembly Drawing Only, Tank, Inlet, 1" Hose	2
3	GA4909045	Assembly Drawing Only, 2" Inlet, Hopper, 45°	1
4	GA4909125	Assembly Drawing Only, 3" Fill	1
5	GA5076720	CAM LEVER, 3 FEMALE COUPLING X 3 FEMALE THREAD, BANJO - NSPT THREAD	1
6	GA5077866	COUPLING, 2" FULL PORT FLANGE X 2" MALE THREAD, BANJO	1
7	GA5076714	FILTER, BASKET TYPE, DIAMETER 305 X 245 DEEP, SUIT MAIN SPRAY TANK	1
8	GA2000115	FLANGE CLAMP, AND GASKET, 2", SERIES 220, HYPRO	1
9	GA5078839	GASKET, EPDM, SUPERMIX AGITATOR MOUNT, MY22	1
10	GA5077704	HOSE BARB ELBOW 1/2" THREAD 3/4" BARB	1
11	GA5000469	HOSE CLAMP, 1/2" SS 12-20/9W3	2
12	GA5000999	HOSE CLAMP, 3/4" SS (16-27/12W)	2
13	GA5077708	HOSE BARB, ELBOW, 90 DEGREE, 1/2 MALE THREAD X 1/2 HOSE, BANJO	2
14	GA5077742	HOSE BARB, ELBOW, 90 DEGREE, 3" MALE THREAD X 3" HOSE, BANJO	1
15	GA5077724	HOSE BARB, STRAIGHT, 1 1/4" MALE THREAD X 1 1/4" HOSE, BANJO	1
16	GA2000209	HOSE, CLEAR, 12mm, SIGHT TUBE, HOS12SIGHT	1.7
17	GA2000216	HOSE, PRESSURE, 20mm, BLACK 250PSI, HOS20P, SOLD PER METER	-
18	GA5076880	LID, BLACK, WITHOUT BREATHER, MEDIUM, DIAMETER 355, ARAG	1
19	GA5000581	NUT M12 HEX SS	4
20	GA5077675	O RING, 20.24 X 2.62, EPDM, G10041	2
21	GA4400290	PLATE, REMOTE VALVE TAP LINK, 3" DRAIN, G8	1
22	GA4412085	PLATE, SUPER MIX AGITATOR MOUNT, FLANGE BRACKET, ALL, MY22	1
23	GA5077945	PLUG, 1 MALE THREAD, BANJO	2
24	GA2000071	PLUMBING FITTING, SWEEP ELBOW, 90, 2" FLANGE TO 2" BARB, M220BRBSWP90, BANJO	1
25	GA5052690	PNEUMATIC FITTING, ELBOW, 90 DEGREE, 1/4 BSP MALE X 8mm PUSH TYPE, METAL	1
26	GA4903097	PRE-ASSEMBLED SUMP DRAIN ALL MODELS	1
27	GA3001158	SENSOR, PRESSURE TRANSMITTER, 4-20MA, 1" M, 0 TO 0.4 BAR, M12, IFM PM1718	1
28	GA5078324	REDUCER, MALE 1" TO MALE 3/4", ARAG, 2402043	1
29	GA5000527	SCREW PAN HEAD 12G X 25mm SS	10
30	GA4908705	SUPER MIX AGITATOR ASSEMBLY, NO BYPASS FITTING.	1
31	GA4951245	TANK 6500L, PRAIRIE PRO, 2021 WITH HOLES	1
32	GA0500139	TANK AGITATOR SCREW, SELF TAPPING, 14G X 30mm, SS 304	8
33	GA4672885	TANK SUPPORT BAR SUIT EF TANKS	1
34	GA4901285-1	TANK, FLUSHING NOZZLE (ELBOW) CAM ADAPTOR	1
35	GA4907845	TANK, OVERFLOW, ASSEMBLY, 3"	1
36	GA4901285-2	TANK, RINSING NOZZLE, ASSEMBLY WITH TEE CAM ADAPTOR	1
37	GA5078204	VALVE, BALL, 3", MALE NPT, MALE CAM LOCK, STUBBLY, LONG HANDLE, BANJO, VSFMT300	1
38	GA4902820	VALVE, BREATHER, ASSEMBLY	1
39	GA5017681	WASHER 1 X 2 7G FLAT THIN SS	2
40	GA5000577	WASHER 12mm FLAT SS HD	4
GA6101050 GOLDACRES		TANK, MAIN ASSEMBLY, CONFIG, 6500L, PRAIRIE PRO, 2021	REV 06

Main Tank, 8500L

ITEM	PART NUMBER	DESCRIPTION	FRONT	REAR
-	GA5003859	STRAP, TANK, 50mm, GOLDACRES BRANDED, (75M/ROLL) (PRICE IS PER METER)	4.6m	2.6m

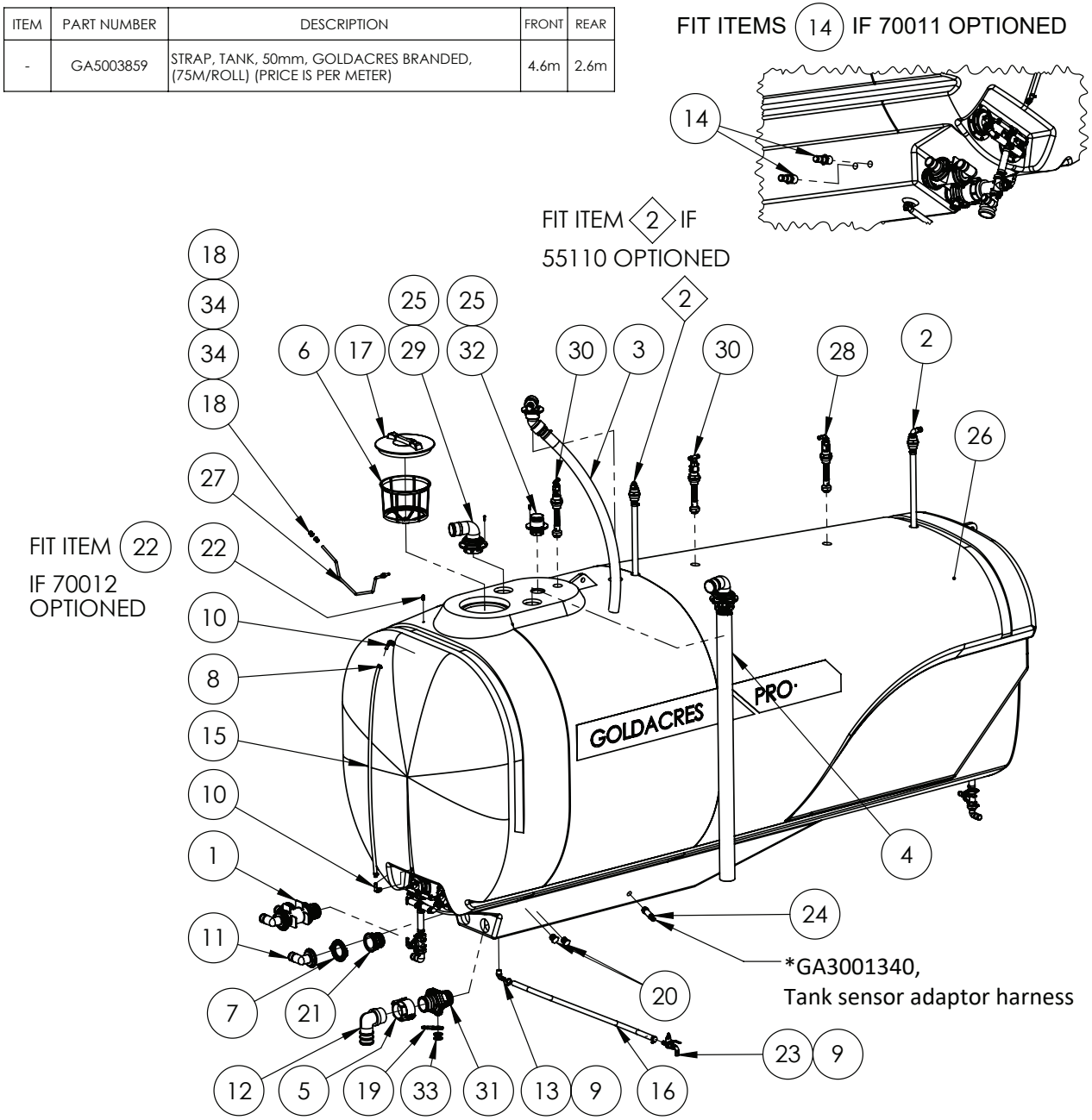

IF DESCRIPTION PREFIX IS ASSEMBLY DRAWING ONLY OR PRODUCTION DRAWING ONLY THE ITEM IS NOT FOR SALE			
ITEM	PART NUMBER	DESCRIPTION	QTY
1	GA4909240	ASSEMBLY DRAWING ONLY, SUCTION OUTLET FITTINGS, 10000L, PRAIRIE PRO, MY21	1
2	GA4909035	ASSEMBLY DRAWING ONLY, TANK, INLET, 1" HOSE	2
3	GA4909045	ASSEMBLY DRAWING ONLY, 2" INLET, HOPPER, 45°	1
4	GA4909125	ASSEMBLY DRAWING ONLY, 3" FILL	1
5	GA5076720	CAM LEVER, 3 FEMALE COUPLING X 3 FEMALE THREAD, BANJO - NSPT THREAD	1
6	GA5076714	FILTER, BASKET TYPE, DIAMETER 305 X 245 DEEP, SUIT MAIN SPRAY TANK	1
7	GA2000116	FLANGE CLAMP, AND GASKET, 3", SERIES 300, HYPRO	1
8	GA5000469	HOSE CLAMP, 1/2" SS 12-20/9W3	2
9	GA5000999	HOSE CLAMP, 3/4" SS (16-27/12W)	2
10	GA5077708	HOSE BARB, ELBOW, 90 DEGREE, 1/2 MALE THREAD X 1/2 HOSE, BANJO	2
11	GA5077871	HOSE BARB, ELBOW, 90 DEGREE, 3" FLANGE X 2" HOSE BARB, BANJO	1
12	GA5077742	HOSE BARB, ELBOW, 90 DEGREE, 3" MALE THREAD X 3" HOSE, BANJO	1
13	GA5077717	HOSE BARB, ELBOW, 90 DEGREE, 3/4 MALE THREAD X 3/4 HOSE, BANJO	1
14	GA5077724	HOSE BARB, STRAIGHT, 1 1/4" MALE THREAD X 1 1/4" HOSE, BANJO	2
15	GA2000209	HOSE, CLEAR, 12mm, SIGHT TUBE, HOS12SIGHT	1.5
16	GA2000216	HOSE, PRESSURE, 20mm, BLACK 250PSI, HOS20P, SOLD PER METER	-
17	GA5076880	LID, BLACK, WITHOUT BREATHER, MEDIUM, DIAMETER 355, ARAG	1
18	GA5000581	NUT M12 HEX SS	4
19	GA4400290	PLATE, REMOTE VALVE TAP LINK, 3" DRAIN, G8	1
20	GA5077945	PLUG, 1 MALE THREAD, BANJO	2
21	GA5077879	PLUMBING ADAPTOR, 3 FLANGE X 3 MALE THREAD, BANJO	1
22	GA5052690	PNEUMATIC FITTING, ELBOW, 90 DEGREE, 1/4 BSP MALE X 8mm PUSH TYPE, METAL	1
23	GA4903097	PRE-ASSEMBLED SUMP DRAIN ALL MODELS	1
24	GA3001158	SENSOR, PRESSURE TRANSMITTER, 4-20MA, 1" M, 0 TO 0.4 BAR, M12, IFM PM1718	1
25	GA5000527	SCREW PAN HEAD 12G X 25mm SS	10
26	GA4951250	TANK 8500L, PRAIRIE PRO, 2021 WITH HOLES	1
27	GA4672885	TANK SUPPORT BAR SUIT EF TANKS	1
28	GA4901285-1	TANK, FLUSHING NOZZLE (ELBOW) CAM ADAPTOR	1
29	GA4907845	TANK, OVERFLOW, ASSEMBLY, 3"	1
30	GA4901285-2	TANK, RINSING NOZZLE, ASSEMBLY WITH TEE CAM ADAPTOR	2
31	GA5078204	VALVE, BALL, 3", MALE NPT, MALE CAM LOCK, STUBBLY, LONG HANDLE, BANJO, VSFMT300	1
32	GA4902820	VALVE, BREATHER, ASSEMBLY	1
33	GA5017681	WASHER 1 X 2 7G FLAT THIN SS	2
34	GA5000577	WASHER 12mm FLAT SS HD	4
GA6101060 GOLDACRES		TANK MAIN ASSEMBLY, CONFIG, 8500L, PRAIRIE PRO, 2021	REV 07

Main Tank, 10,000L

ITEM	PART NUMBER	DESCRIPTION	FRONT	REAR
-	GA5003859	STRAP, TANK, 50mm, GOLDACRES BRANDED, (75M/ROLL) (PRICE IS PER METER)	5.1m	2.75m

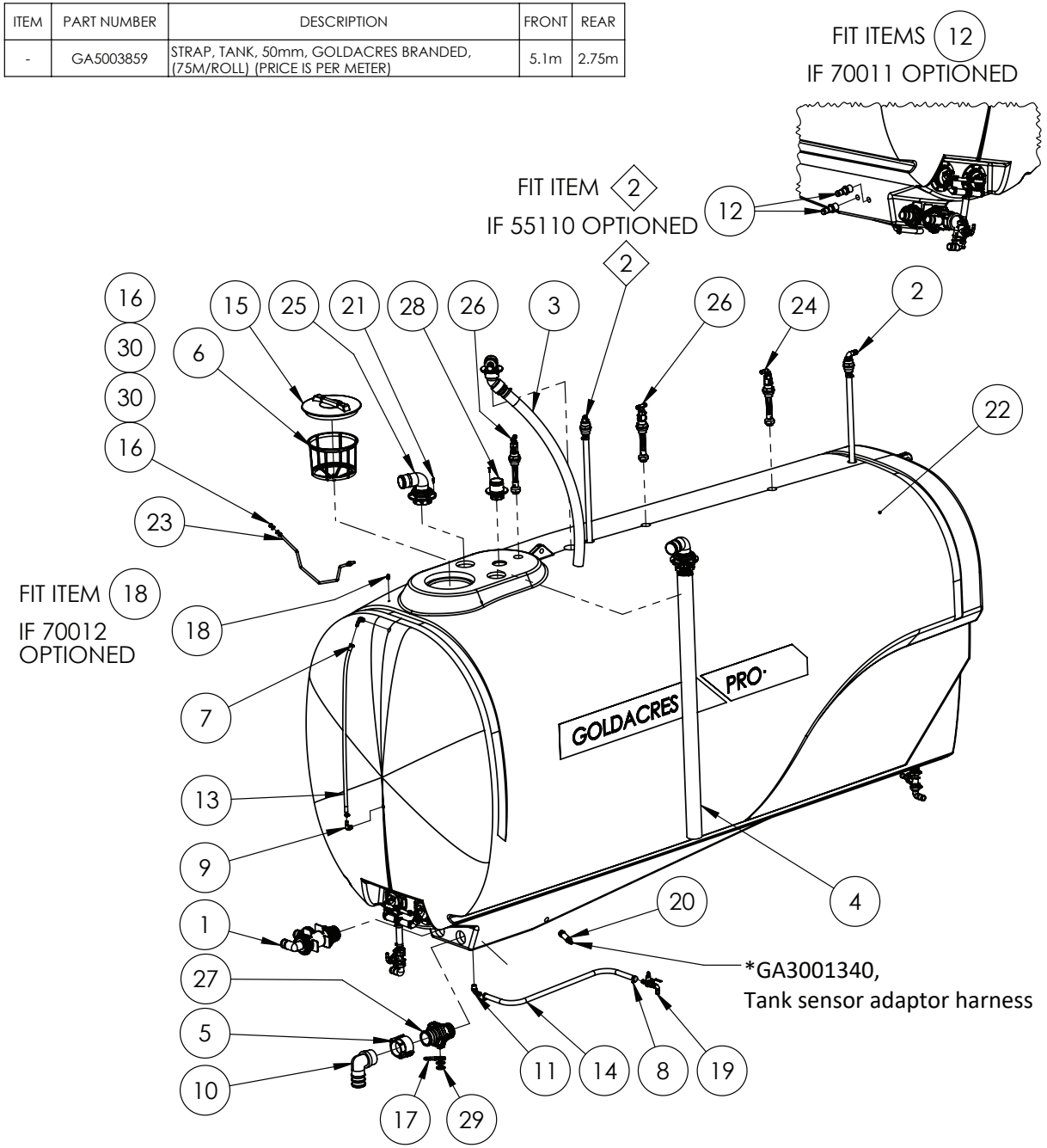

IF DESCRIPTION PREFIX IS ASSEMBLY DRAWING ONLY OR PRODUCTION DRAWING ONLY THE ITEM IS NOT FOR SALE			
ITEM	PART NUMBER	DESCRIPTION	QTY
1	GA4909240	ASSEMBLY DRAWING ONLY, SUCTION OUTLET FITTINGS, 10000L, PRAIRIE PRO, MY21	1
2	GA4909040	ASSEMBLY DRAWING ONLY, TANK, INLET, 1"	2
3	GA4909045	ASSEMBLY DRAWING ONLY, 2" INLET, HOPPER, 45°	1
4	GA4909125	ASSEMBLY DRAWING ONLY, 3" FILL	1
5	GA5076720	CAM LEVER, 3 FEMALE COUPLING X 3 FEMALE THREAD, BANJO - NSPT THREAD	1
6	GA5076714	FILTER, BASKET TYPE, DIAMETER 305 X 245 DEEP, SUIT MAIN SPRAY TANK	1
7	GA5000469	HOSE CLAMP, 1/2" SS 12-20/9W3	2
8	GA5000999	HOSE CLAMP, 3/4" SS (16-27/12W)	2
9	GA5077708	HOSE BARB, ELBOW, 90 DEGREE, 1/2 MALE THREAD X 1/2 HOSE, BANJO	2
10	GA5077742	HOSE BARB, ELBOW, 90 DEGREE, 3" MALE THREAD X 3" HOSE, BANJO	1
11	GA5077717	HOSE BARB, ELBOW, 90 DEGREE, 3/4 MALE THREAD X 3/4 HOSE, BANJO	1
12	GA5077724	HOSE BARB, STRAIGHT, 1 1/4" MALE THREAD X 1 1/4" HOSE, BANJO	2
13	GA2000209	HOSE, CLEAR, 12mm, SIGHT TUBE, HOS12SIGHT	1.1
14	GA2000216	HOSE, PRESSURE, 20mm, BLACK 250PSI, HOS20P, SOLD PER METER	-
15	GA5076880	LID, BLACK, WITHOUT BREATHER, MEDIUM, DIAMETER 355, ARAG	1
16	GA5000581	NUT M12 HEX SS	4
17	GA4400290	PLATE, REMOTE VALVE TAP LINK, 3" DRAIN, G8	1
18	GA5052690	PNEUMATIC FITTING, ELBOW, 90 DEGREE, 1/4 BSP MALE X 8mm PUSH TYPE, METAL	1
19	GA4903097	PRE-ASSEMBLED SUMP DRAIN ALL MODELS	1
20	GA3001158	SENSOR, PRESSURE TRANSMITTER, 4-20MA, 1" M, 0 TO 0.4 BAR, M12, IFM PM1718	1
21	GA5000527	SCREW PAN HEAD 12G X 25mm SS	10
22	GA4951255	SUB ASSEMBLY ONLY, TANK 10000L, PRAIRIE PRO, 2021 WITH HOLES	1
23	GA4672885	TANK SUPPORT BAR SUIT EF TANKS	1
24	GA4901285-1	TANK, FLUSHING NOZZLE (ELBOW) CAM ADAPTOR	1
25	GA4907845	TANK, OVERFLOW, ASSEMBLY, 3"	1
26	GA4901285-2	TANK, RINSING NOZZLE, ASSEMBLY WITH TEE CAM ADAPTOR	2
27	GA5078204	VALVE, BALL, 3", MALE NPT, MALE CAM LOCK, STUBBLY, LONG HANDLE, BANJO, VSFMT300	1
28	GA4902820	VALVE, BREATHER, ASSEMBLY	1
29	GA5017681	WASHER 1 X 2 7G FLAT THIN SS	2
30	GA5000577	WASHER 12mm FLAT SS HD	4
GA6101070 GOLDACRES		TANK MAIN ASSEMBLY, CONFIG, 10,000L, PRAIRIE PRO, 2021	REV 08

Hoses, Main Tank, 5000L

FOR HOSE INFORMATION REFER TO
PLUMBING SCHEMATICS GA7500071

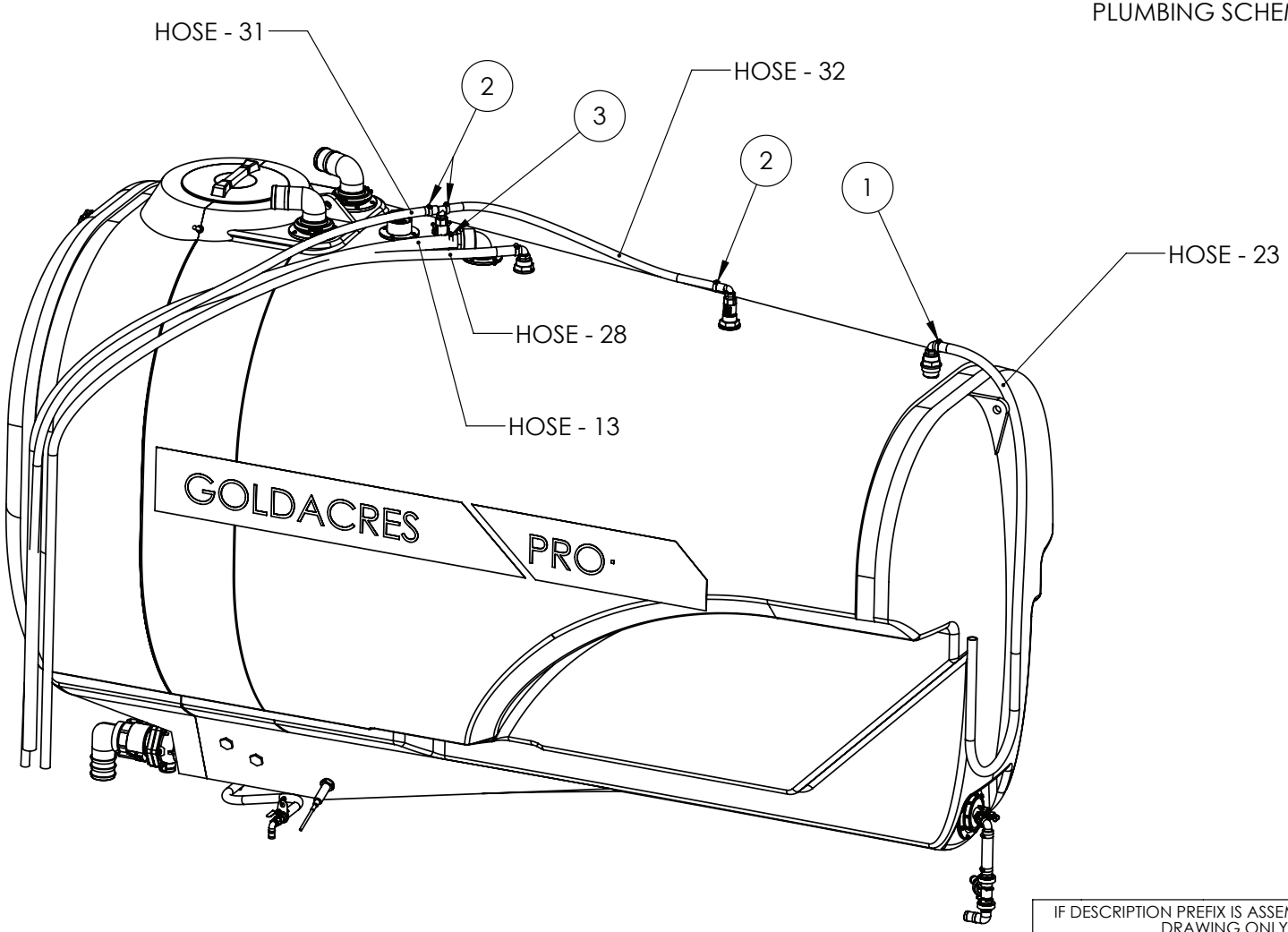

IF DESCRIPTION PREFIX IS ASSEMBLY DRAWING ONLY OR PRODUCTION DRAWING ONLY THE ITEM IS NOT FOR SALE			
ITEM	PART NUMBER	DESCRIPTION	QTY
1	GA5001681	HOSE CLAMP, 1" SS (20-32/12W)	2
2	GA5000999	HOSE CLAMP, 3/4" SS (16-27/12W)	3
3	GA5002873	HOSE CLAMP, 1 1/2" SS (32-50/12W)	1
GA6101040 GOLDACRES		TANK, MAIN ASSEMBLY, CONFIG, 5000L, PRAIRIE PRO, 2021	REV 05

Hoses, Main Tank, 6500L

FOR HOSE INFORMATION REFER TO
PLUMBING SCHEMATICS GA7500071

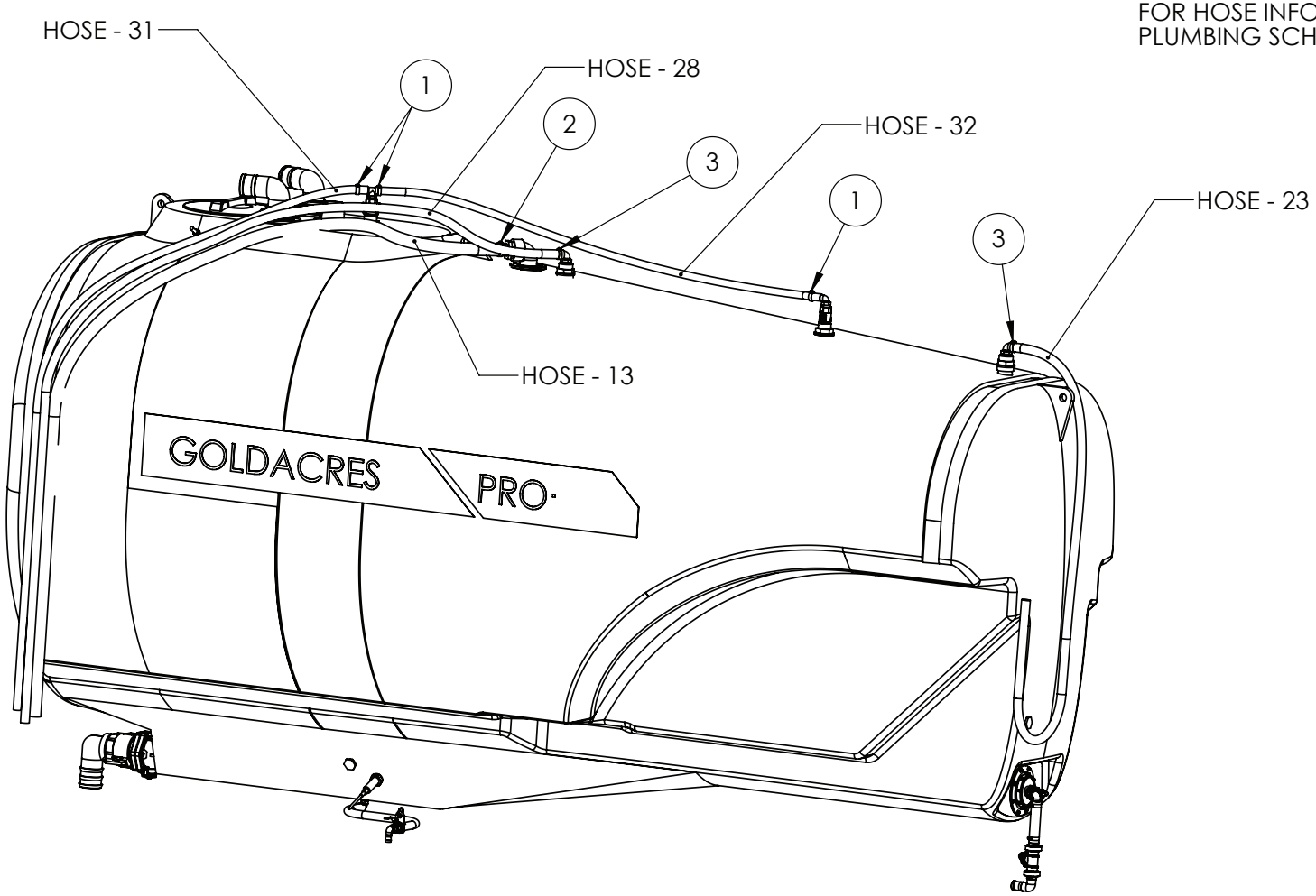

IF DESCRIPTION PREFIX IS ASSEMBLY DRAWING ONLY OR PRODUCTION DRAWING ONLY THE ITEM IS NOT FOR SALE			
ITEM	PART NUMBER	DESCRIPTION	QTY
3	GA5001681	HOSE CLAMP, 1" SS (20-32/12W)	2
1	GA5000999	HOSE CLAMP, 3/4" SS (16-27/12W)	3
2	GA5002873	HOSE CLAMP, 1 1/2" SS (32-50/12W)	1
GA6101050 GOLDACRES		TANK, MAIN ASSEMBLY, CONFIG, 6500L, PRAIRIE PRO, 2021	REV 05

Hoses, Main Tank, 8500L

FOR HOSE INFORMATION REFER TO
PLUMBING SCHEMATICS GA7500071

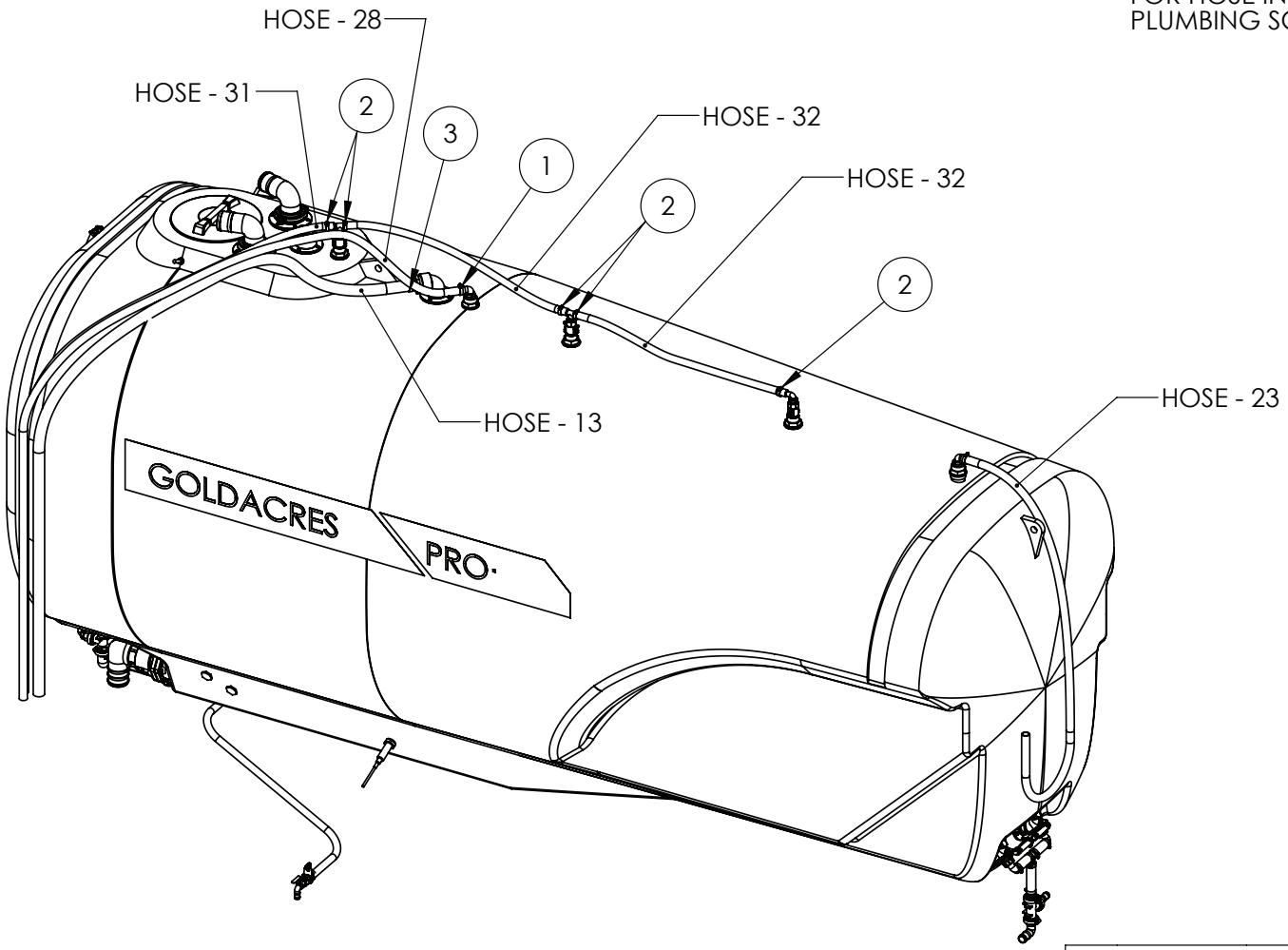

IF DESCRIPTION PREFIX IS ASSEMBLY DRAWING ONLY OR PRODUCTION DRAWING ONLY THE ITEM IS NOT FOR SALE			
ITEM	PART NUMBER	DESCRIPTION	QTY
1	GA5001681	HOSE CLAMP, 1" SS (20-32/12W)	2
2	GA5000999	HOSE CLAMP, 3/4" SS (16-27/12W)	5
3	GA5002873	HOSE CLAMP, 1 1/2" SS (32-50/12W)	1
GA6101060 GOLDACRES		TANK MAIN ASSEMBLY, CONFIG, 8500L, PRAIRIE PRO, 2021	REV 06

Hoses, Main Tank, 10,000L

FOR HOSE INFORMATION REFER TO
PLUMBING SCHEMATICS GA7500071

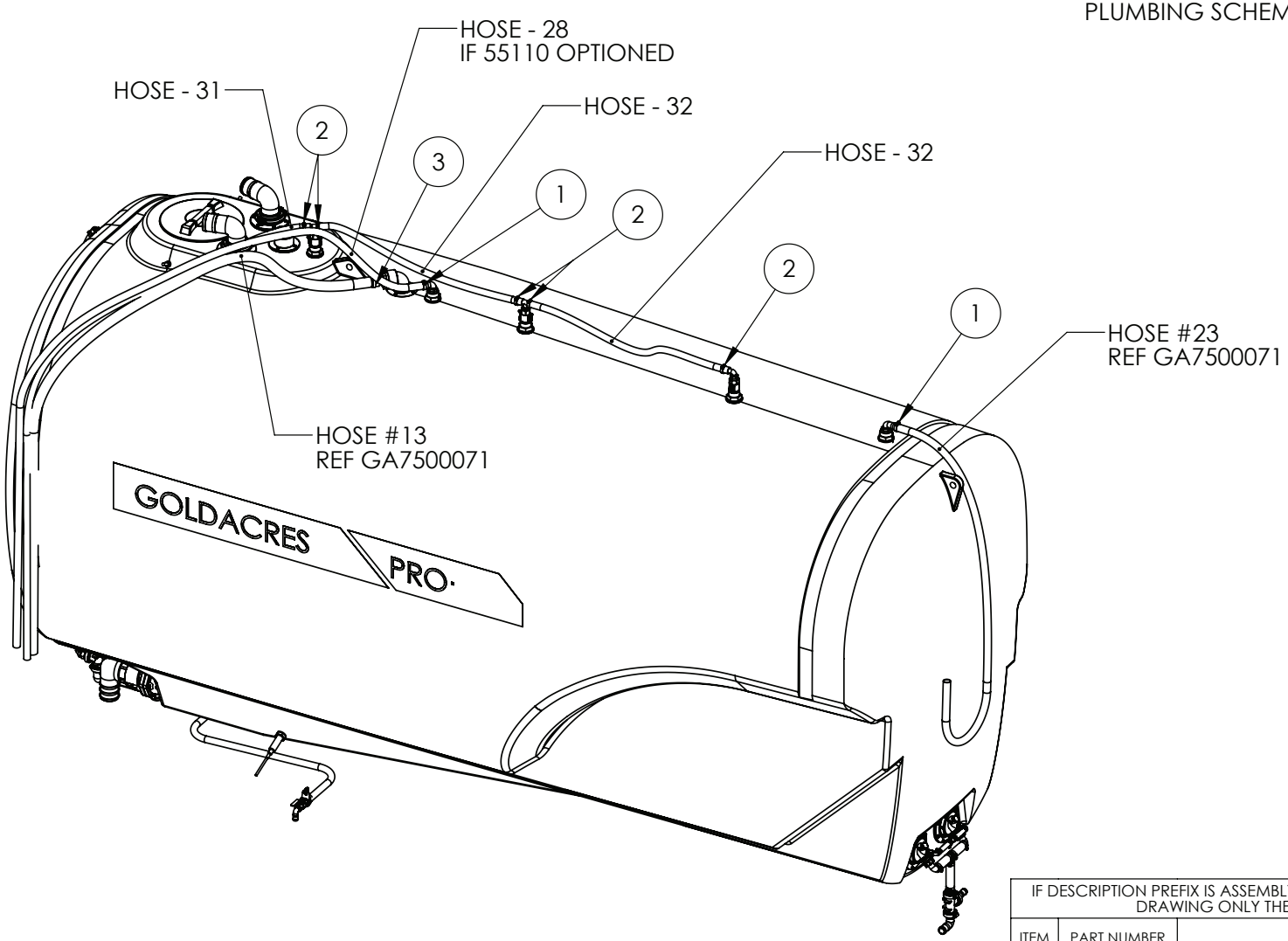

IF DESCRIPTION PREFIX IS ASSEMBLY DRAWING ONLY OR PRODUCTION DRAWING ONLY THE ITEM IS NOT FOR SALE			
ITEM	PART NUMBER	DESCRIPTION	QTY
1	GA5001681	HOSE CLAMP, 1" SS (20-32/12W)	2
2	GA5000999	HOSE CLAMP, 3/4" SS (16-27/12W)	5
3	GA5002873	HOSE CLAMP, 1 1/2" SS (32-50/12W)	1
GA6101070 GOLDACRES		TANK MAIN ASSEMBLY, CONFIG, 10,000L, PRAIRIE PRO, 2021	REV 07

Dual Agitator, Plumbing Assembly, Front & Rear

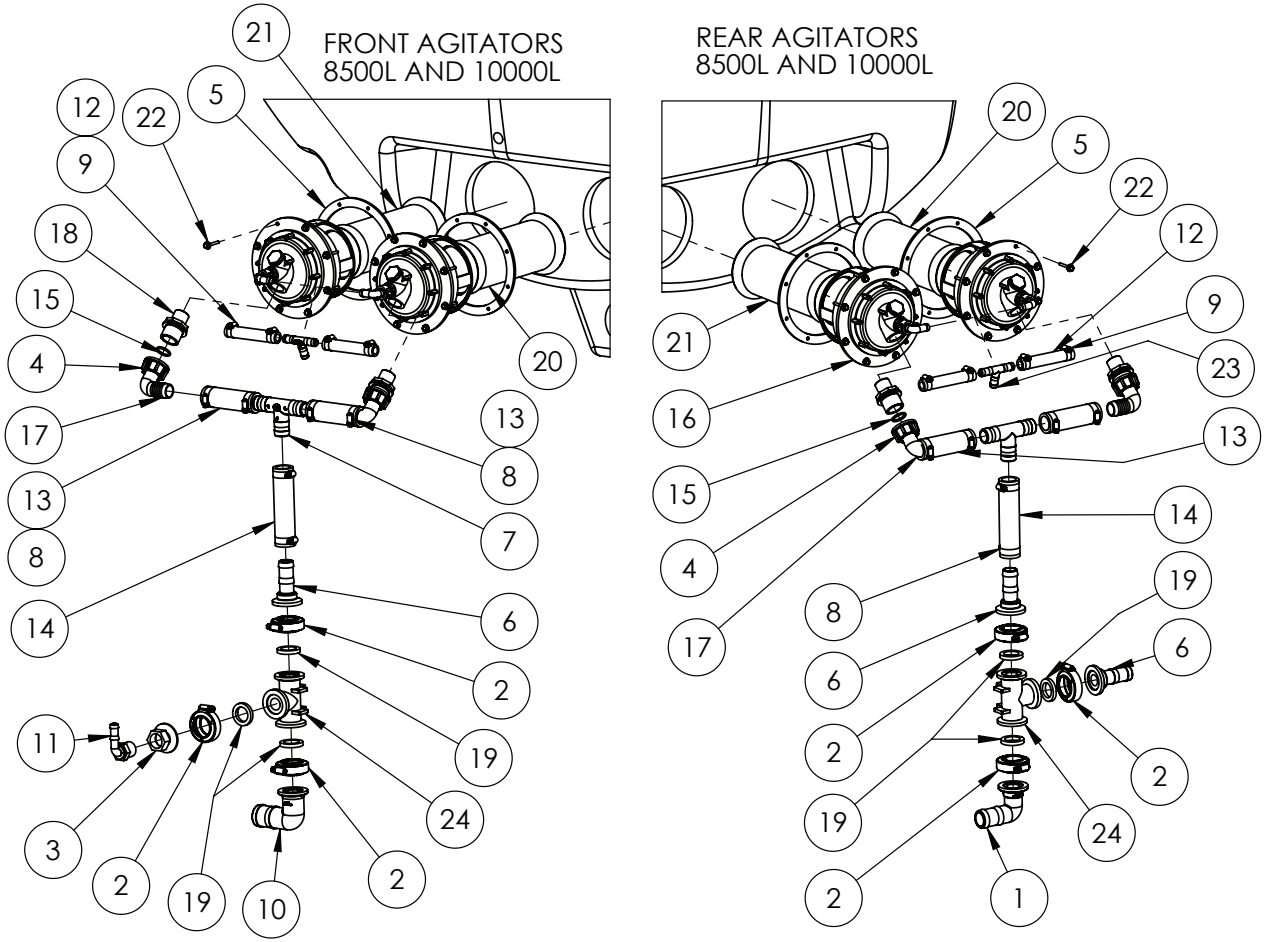

IF DESCRIPTION PREFIX IS ASSEMBLY DRAWING ONLY OR PRODUCTION DRAWING ONLY THE ITEM IS NOT FOR SALE			
ITEM	PART NUMBER	DESCRIPTION	QTY
1	GA5077807	1" FLANGE X 1 1/4" BARB, ELBOW, 90 DEGREE, M100125BRB90	1
2	GA5077664	CLAMP, WORM SCREW, 1", BANJO	6
3	GA5077804	COUPLING, 1" FLANGE X 3/4" FEMALE THREAD, BANJO	1
4	GA5076602	FLY NUT, 1, ARAG, 2002040	4
5	GA5078839	GASKET, EPDM, SUPERMIX AGITATOR MOUNT, MY22	4
6	GA5077811	HOSE BARB, STRAIGHT, 1 FLANGE X 1 HOSE, BANJO	3
7	GA5077755	HOSE BARB, TEE, 1 HOSE, BANJO, HBT100	2
8	GA5001681	HOSE CLAMP, 1" SS (20-32/12W)	12
9	GA5000469	HOSE CLAMP, 1/2" SS 12-20/9W3	8
10	GA2000138	HOSE BARB, ELBOW, 90 DEGREE, 1" FLANGE, X 1 1/2" HOSE, BANGO M100150BRB90	1
11	GA5077710	HOSE BARB, ELBOW, 90 DEGREE, 3/4 MALE THREAD X 1/2 HOSE, BANJO	1
12	GA2000211	HOSE, PRESSURE, 12mm, BLACK, 250PSI, HOS13P, SOLD PER METER	0.48
13	GA2000219	HOSE, PRESSURE, 25mm, BLACK 250PSI, HOS25P, SOLD PER METER	0.44
14	GA2000219	HOSE, PRESSURE, 25mm, BLACK 250PSI, HOS25P, SOLD PER METER	0.28
15	GA5077675	O RING, 20.24 X 2.62, EPDM, G10041	4
16	GA4412085	PLATE, SUPER MIX AGITATOR MOUNT, FLANGE BRACKET, ALL, MY22	4
17	GA5078296	PLUMBING FITTING, HOSE TAIL 1", ELBOW, 90 DEGREE, 25mm, SUIT FLY NUT, ARAG 116425	4
18	GA5078324	REDUCER, MALE 1" TO MALE 3/4", ARAG, 2402043	4
19	GA5077818	SEAL, SUIT 1 MANIFOLD FITTING, RUBBER EPDM, BANJO, M100G	6
20	GA4908705	SUPER MIX AGITATOR ASSEMBLY, NO BYPASS FITTING.	2
21	GA4908705	SUPER MIX AGITATOR ASSEMBLY, NO BYPASS FITTING.	2
22	GA0500139	TANK AGITATOR SCREW, SELF TAPPING, 14G X 30mm, SS 304	32
23	GA5077751	TEE, HOSE BARB, 1/2, BANJO, HBT050-050	2
24	GA5077823	TEE, 1 FLANGE X 1 FLANGE X 1 FLANGE, BANJO, M100TEE	2
GA6101060 GOLDACRES		TANK MAIN ASSEMBLY, CONFIG, 8500L, PRAIRIE PRO, 2021	REV 05

Tank Rinse Nozzle Assembly, Elbow

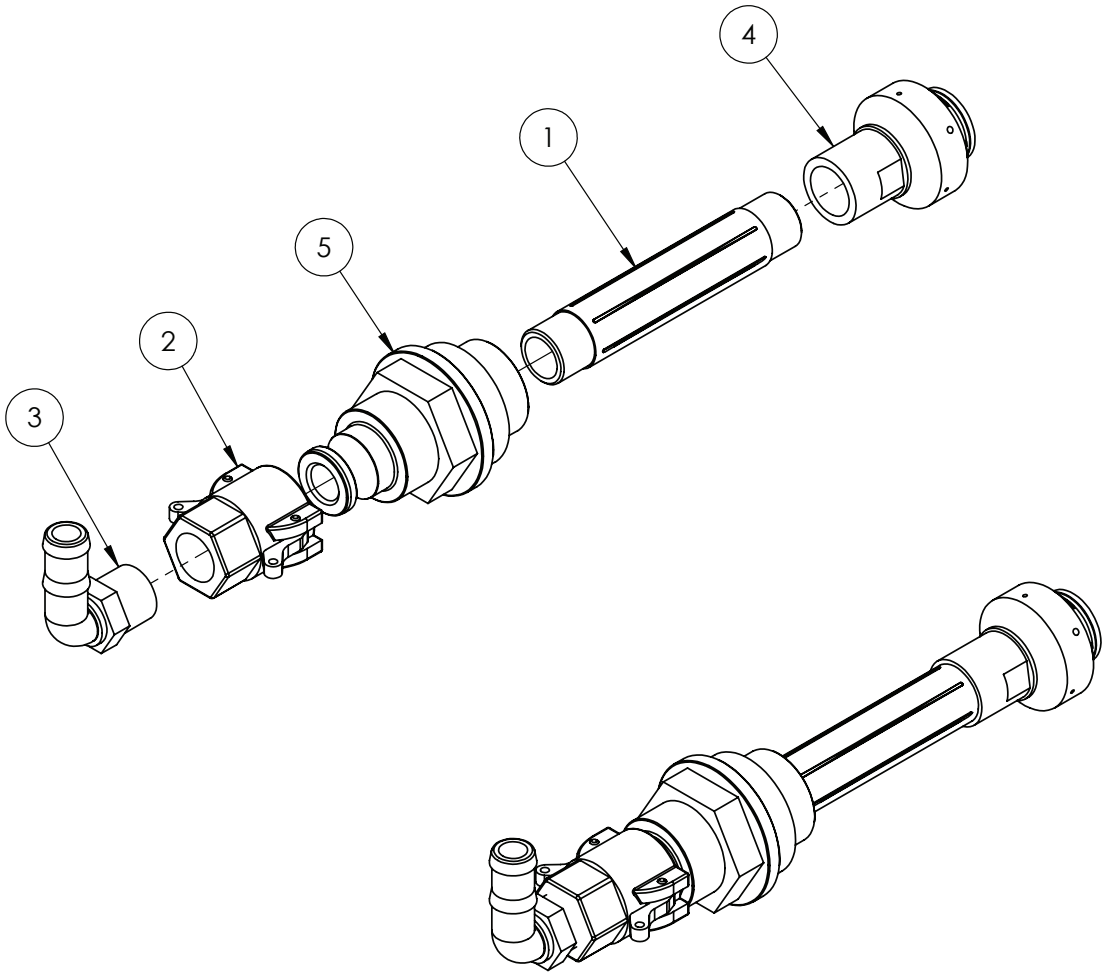

IF DESCRIPTION PREFIX IS ASSEMBLY DRAWING ONLY OR PRODUCTION DRAWING ONLY THE ITEM IS NOT FOR SALE			
ITEM	PART NUMBER	DESCRIPTION	QTY
1	GA5077912	3/4" X 6" POLY NIPPLE	1
2	GA5077132	CAM LEVER, 3/4 FEMALE COUPLING X 3/4 FEMALE THREAD, BANJO	1
3	GA5077717	HOSE BARB, ELBOW, 90 DEGREE, 3/4" MALE THREAD X 3/4" HOSE	1
4	GA5077336	NOZZLE, TANK RINSING, 3/4 BSPT FEMALE INLET, TEEJET	1
5	GA4572015	TANK RINSE ADAPTOR WITH CAM LOCK	1
GA4901285-1 GOLDACRES		TANK, FLUSHING NOZZLE (ELBOW) CAM ADAPTOR	REV 01

Tank Rinse Nozzle Assembly, Tee

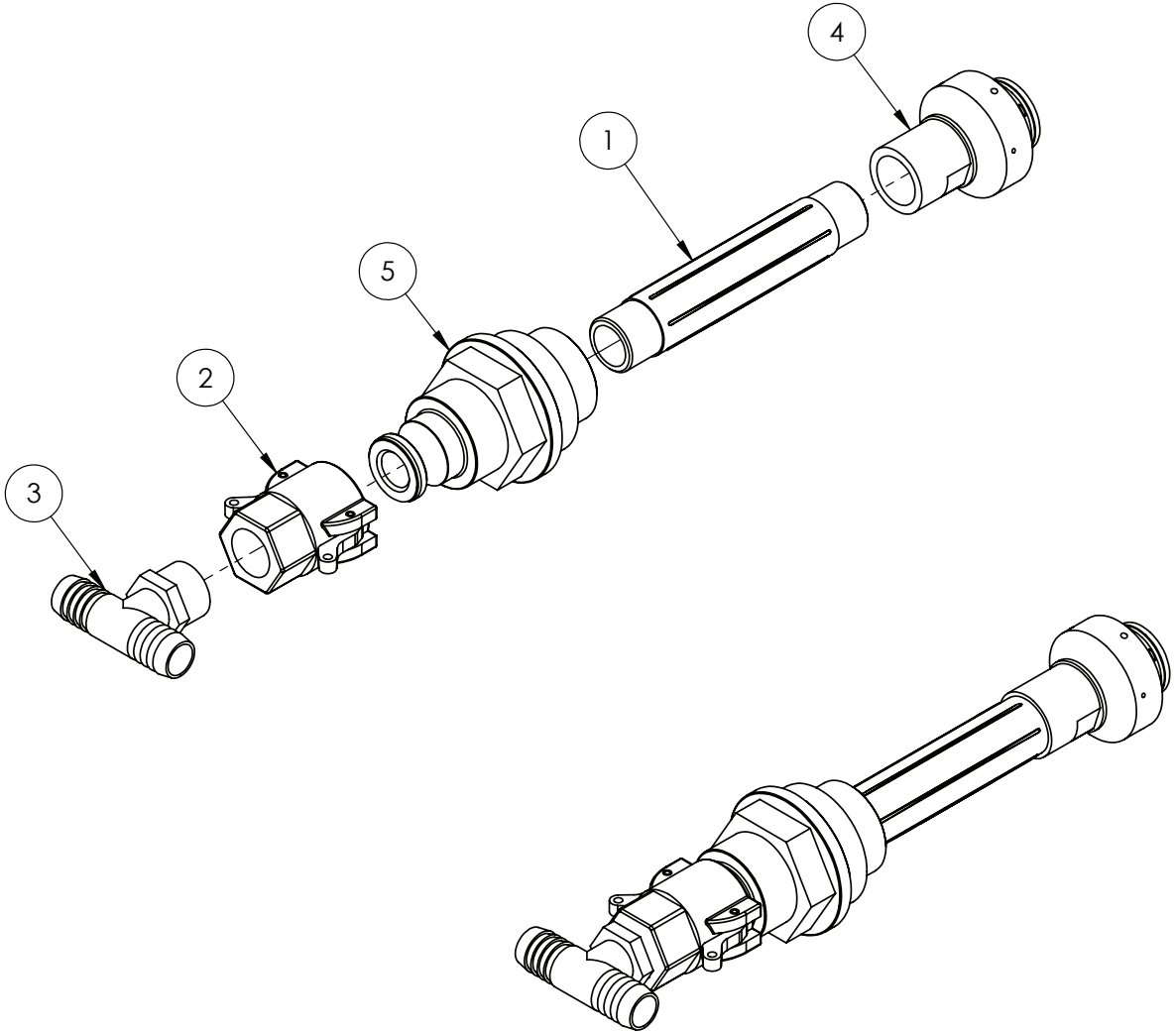

IF DESCRIPTION PREFIX IS ASSEMBLY DRAWING ONLY OR PRODUCTION DRAWING ONLY THE ITEM IS NOT FOR SALE			
ITEM	PART NUMBER	DESCRIPTION	QTY
1	GA5077912	3/4" X 6" POLY NIPPLE	1
2	GA5077132	CAM LEVER, 3/4 FEMALE COUPLING X 3/4 FEMALE THREAD, BANJO	1
3	GA3500431	HOSE BARB, TEE, 3/4" HOSE BARB X 3/4" HOSE BARB X 3/4" MALE THREAD	1
4	GA5077336	NOZZLE, TANK RINSING, 3/4 BSPT FEMALE INLET, TEEJET	1
5	GA4572015	TANK RINSE ADAPTOR WITH CAM LOCK	1
GA4901285-2 GOLDACRES		TANK, RINSING NOZZLE, ASSEMBLY WITH TEE CAM ADAPTOR	REV 00

Valve, Breather Assembly

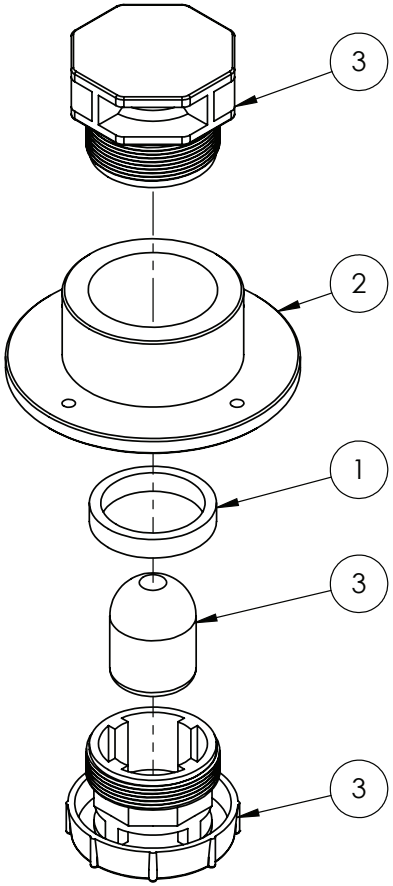

IF DESCRIPTION PREFIX IS ASSEMBLY DRAWING ONLY OR PRODUCTION DRAWING ONLY THE ITEM IS NOT FOR SALE			
ITEM	PART NUMBER	DESCRIPTION	QTY
1	GA4551975	SPACER, 56mm OD, 5mm WALL, 10mm UNIBOARD POLY	1
2	GA4583370	THREADED TANK FLANGE 2"	1
3	GA5077046	VALVE, BREATHER, SINGLE FLOATING BALL, 504210	1
GA4902820 GOLDACRES		VALVE, BREATHER, ASSEMBLY	REV 00

Sump Drain Assembly, Main Tank

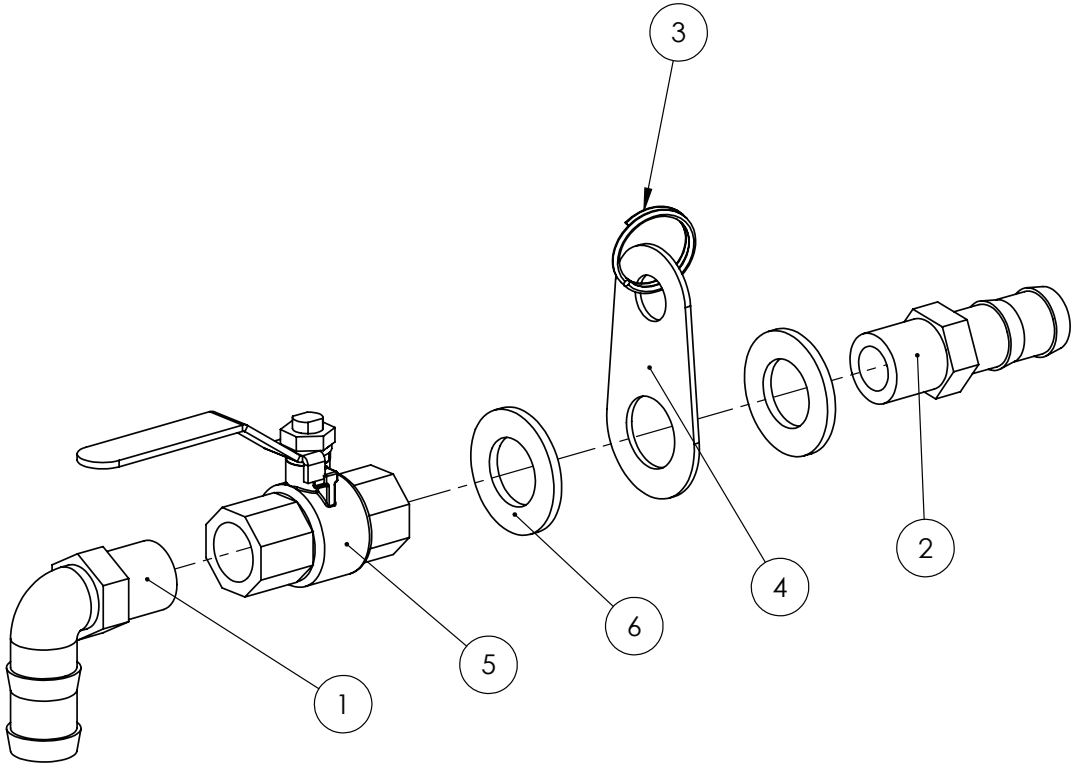

IF DESCRIPTION PREFIX IS ASSEMBLY DRAWING ONLY OR PRODUCTION DRAWING ONLY THE ITEM IS NOT FOR SALE			
ITEM	PART NUMBER	DESCRIPTION	QTY
1	GA5077704	HOSE BARB, ELBOW, 90 DEGREE, 1/2 MALE THREAD X 3/4 HOSE, BANJO	1
2	GA5077707	HOSE BARB, 1/2 MALE THREAD X 3/4 HOSE, BANJO	1
3	GA5002077	KEY RING, 25mm, SS	1
4	F70565A	SUMP DRAIN MOUNTING PLATE	1
5	GA5018309	VALVE, BALL, 12mm, 1/2" FEMALE, LEVER HANDLE, BRASS	1
6	GA5001741	WASHER 20mm FLAT SS HD	2
GA4903097 GOLDACRES		PRE-ASSEMBLED SUMP DRAIN ALL MODELS	REV

Tank Overflow Assembly, 3”

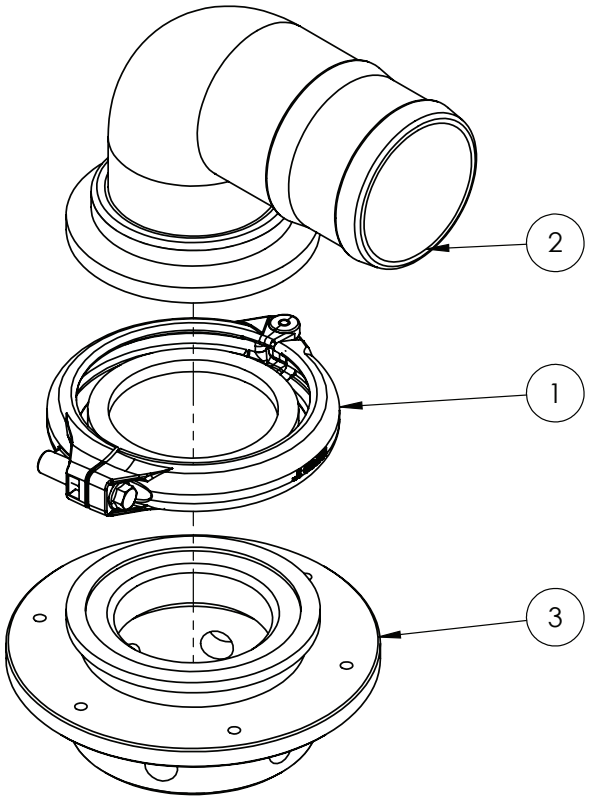

IF DESCRIPTION PREFIX IS ASSEMBLY DRAWING ONLY OR PRODUCTION DRAWING ONLY THE ITEM IS NOT FOR SALE			
ITEM	PART NUMBER	DESCRIPTION	QTY
1	GA2000116	FLANGE CLAMP, AND GASKET, 3", SERIES 300, HYPRO	1
2	GA5077875	HOSE BARB, ELBOW, 90 DEGREE, 3 FLANGE X 3 HOSE, BANJO, M300BRB90	1
3	GA4550590	TANK TOP INLET FITTING, 3" BANJO FLANGE AND 3" NPT FEMALE THREAD	1
GA4907845 GOLDACRES		TANK, OVERFLOW, ASSEMBLY, 3"	REV 01

Super Mix Agitator Assembly

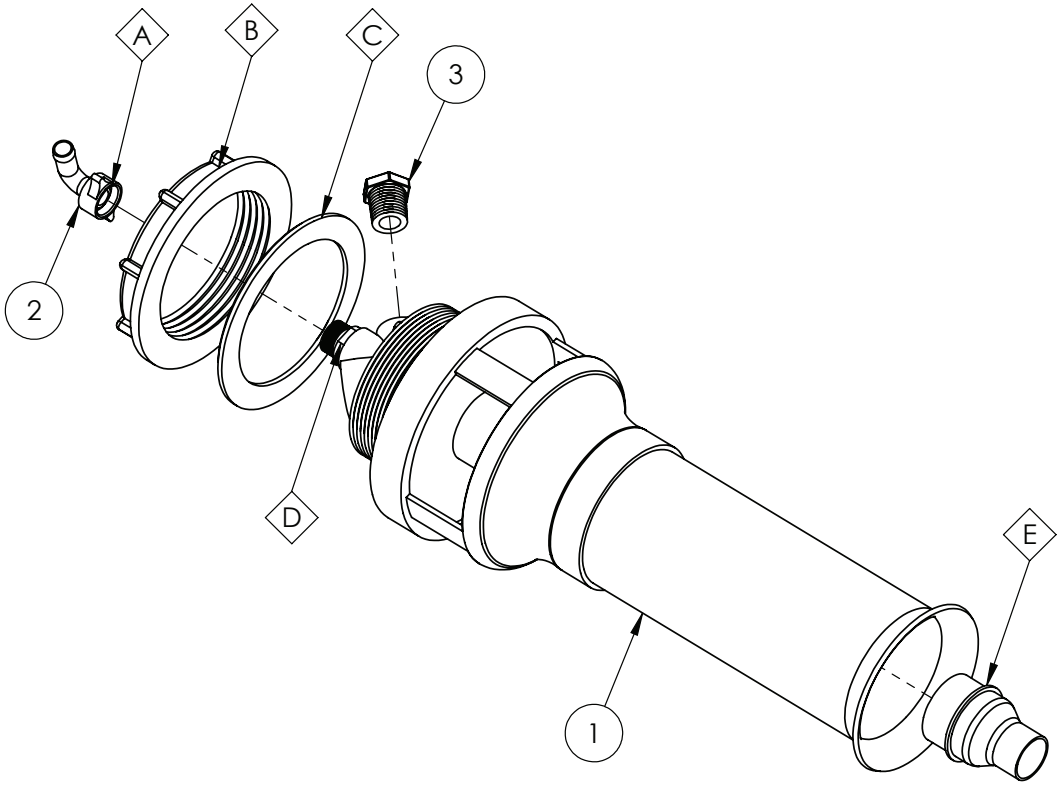

OPTIONAL PARTS			
ITEM	PART NUMBER	DESCRIPTION	QTY
A	GA5075653	SEAL, RUBBER, 11.8 ID X 18 OD X 2, 006100	1
B	GA2000298	FLY NUT, SUPERMIX AGITATOR, ARAG, 502053.040	1
C	GA5024555	SEAL, SUPERMIX AGITATOR 502053.050	1
D	GA5077038	AGITATOR, SUPER MIX, 3mm JET, ARAG, 502054	1
E	GA2000295	NOZZLE, REDUCER, LOW PRESSURE, SUPERMIX AGITATOR, ARAG, 502053.110	1

IF DESCRIPTION PREFIX IS ASSEMBLY DRAWING ONLY OR PRODUCTION DRAWING ONLY THE ITEM IS NOT FOR SALE			
ITEM	PART NUMBER	DESCRIPTION	QTY
1	GA5077038	AGITATOR MIXER BODY WITH NUT AND RUBBER SEAL	1
2	GA5075657	HOSE BARB, ELBOW, 90 DEGREE, 13mm HOSE, INCLUDING 1/2 FLY NUT AND SEAL, BRASS, ARAG	1
3	GA5077943	PLUG, 1/2 MALE THREAD, BANJO	1
GA4908705 GOLDACRES		SUPER MIX AGITATOR ASSEMBLY, NO BYPASS FITTING.	REV 01

Tank Inlet, 1”, 5000L, 6500L & 8500L

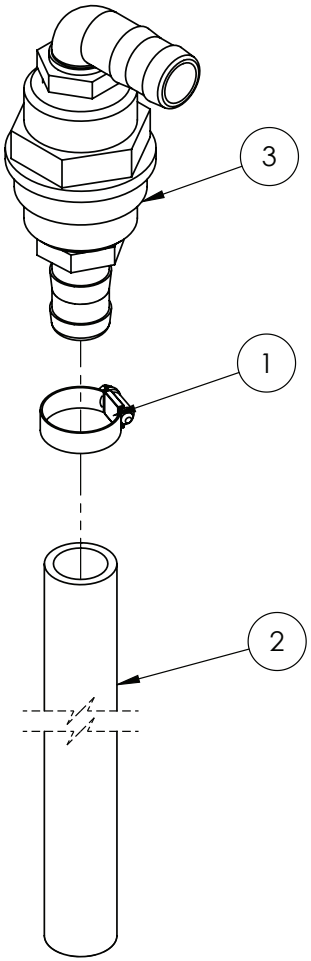

IF DESCRIPTION PREFIX IS ASSEMBLY DRAWING ONLY OR PRODUCTION DRAWING ONLY THE ITEM IS NOT FOR SALE			
ITEM	PART NUMBER	DESCRIPTION	QTY
1	GA5001681	HOSE CLAMP, 1" SS (20-32/12W)	1
2	GA2000220	HOSE, SUCTION, PVC, 25mm, BLACK, HOS25PVC, SOLD PER METER	1.3
3	GA4922140	TANK, INLET, 1", CHEMICAL FILL POINT	1
GA4909035 GOLDACRES		ASSEMBLY DRAWING ONLY, TANK, INLET, 1" HOSE	REV 02

Tank Inlet, 1”, 10000L

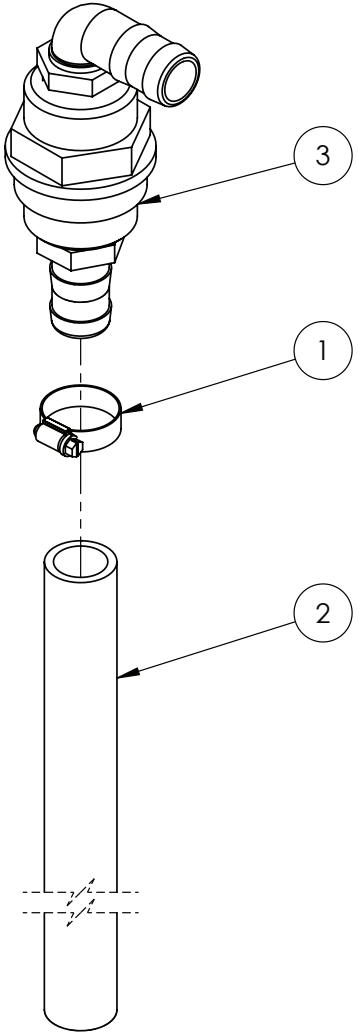

IF DESCRIPTION PREFIX IS ASSEMBLY DRAWING ONLY OR PRODUCTION DRAWING ONLY THE ITEM IS NOT FOR SALE			
ITEM	PART NUMBER	DESCRIPTION	QTY
1	GA5001681	HOSE CLAMP, 1" SS (20-32/12W)	1
2	GA2000220	HOSE, SUCTION, PVC, 25mm, BLACK, HOS25PVC, SOLD PER METER	1.7
3	GA4922140	TANK, INLET, 1", CHEMICAL FILL POINT	1
GA4909040 GOLDACRES		ASSEMBLY DRAWING ONLY, TANK, INLET, 1"	REV 01

Tank Inlet Assembly, 1”

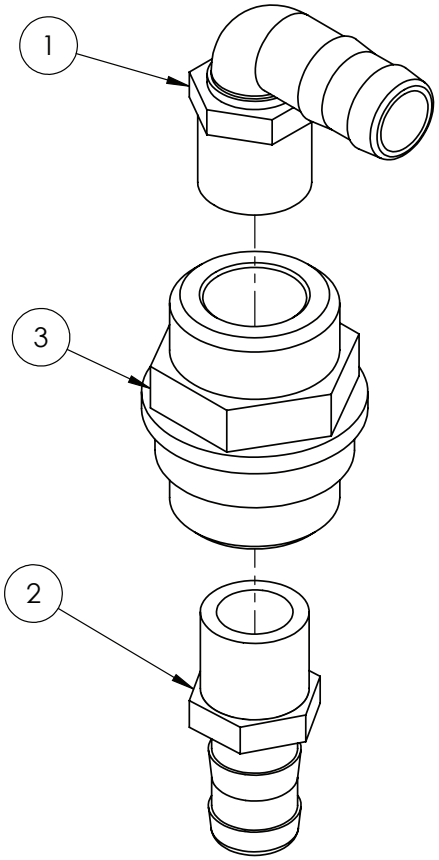

IF DESCRIPTION PREFIX IS ASSEMBLY DRAWING ONLY OR PRODUCTION DRAWING ONLY THE ITEM IS NOT FOR SALE			
ITEM	PART NUMBER	DESCRIPTION	QTY
1	GA5077723	HOSE BARB, ELBOW, 90 DEGREE, 1" MALE X 1" HOSE, BANJO	1
2	GA5077718	HOSE BARB, STRAIGHT, 1 MALE THREAD X 1 HOSE, BANJO	1
3	GA4572395	MAIN TANK LINE RETURN FITTING 1"	1
GA4922140 GOLDACRES		TANK, INLET, 1", CHEMICAL FILL POINT	REV 01

Tank Inlet, 1 1/2”

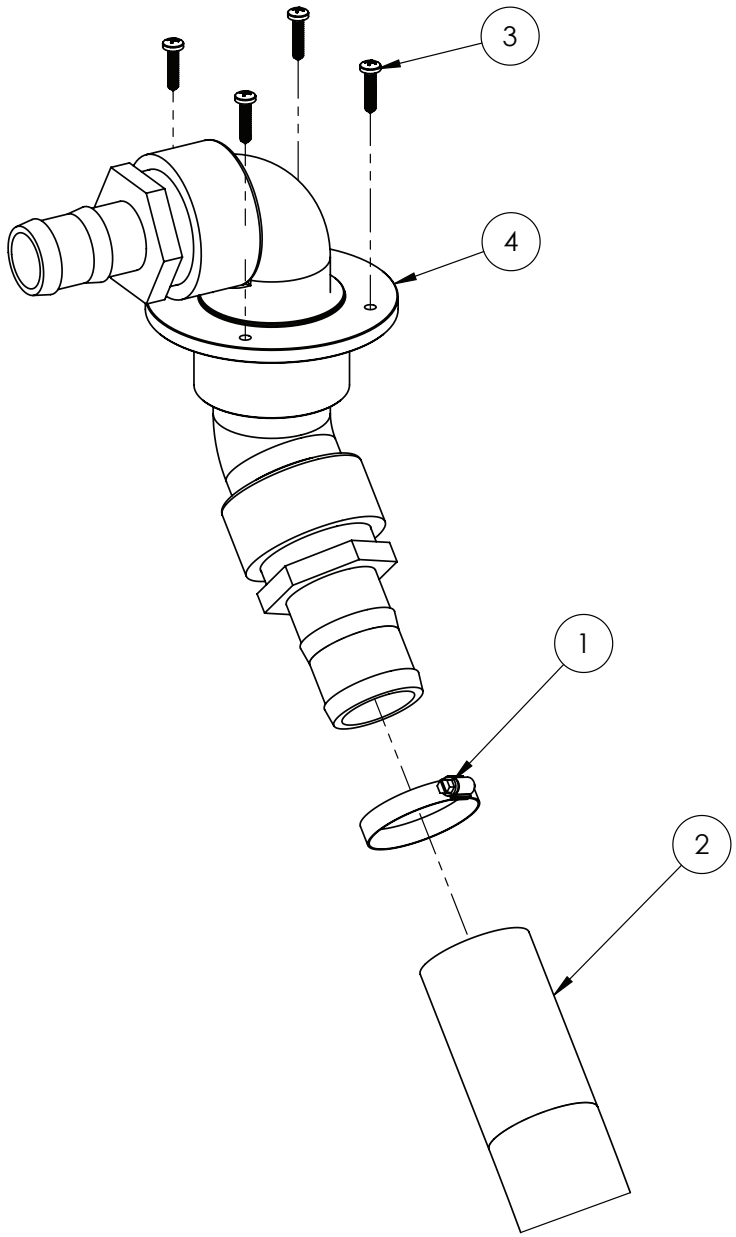

IF DESCRIPTION PREFIX IS ASSEMBLY DRAWING ONLY OR PRODUCTION DRAWING ONLY THE ITEM IS NOT FOR SALE			
ITEM	PART NUMBER	DESCRIPTION	QTY
1	GA5003325	HOSE CLAMP 2" SS (40-60/12W)	1
2	GA2000228	HOSE, SUCTION, PVC, 50mm, BLACK, HOS50PVC, SOLD PER METER	1.2
3	GA5000527	SCREW PAN HEAD 12G X 25mm SS	4
4	GA4904815	TANK, INLET FLANGE ASSEMBLY, HOPPER, MODIFIED 45 DEGREE ELBOW	1
GA4909045 GOLDACRES		ASSEMBLY DRAWING ONLY, 2" INLET, HOPPER, 45°	REV 01

Tank Inlet Assembly, 1 1/2”

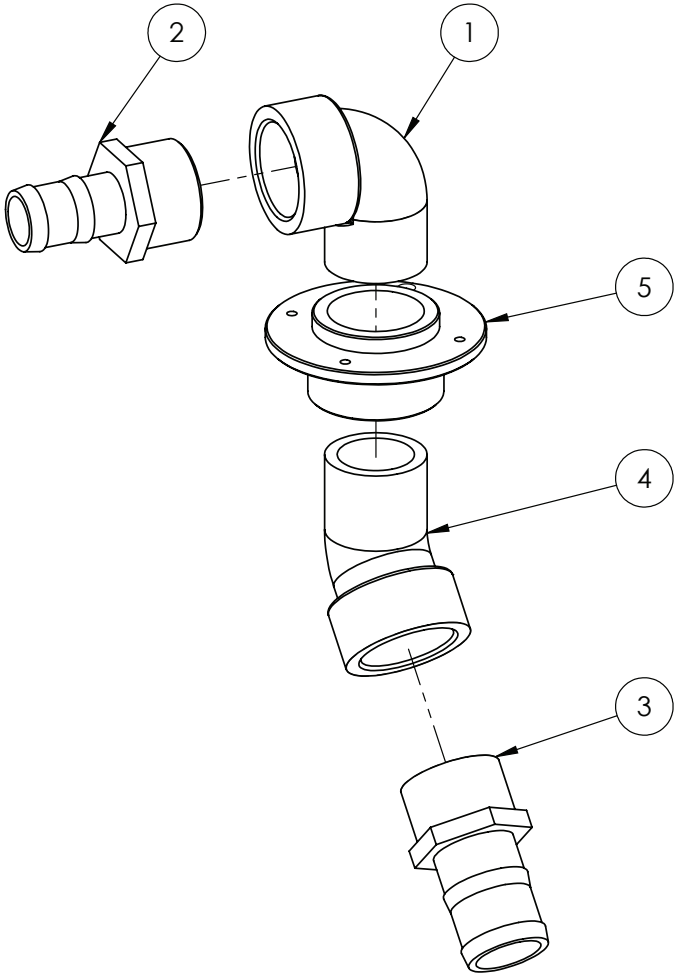

IF DESCRIPTION PREFIX IS ASSEMBLY DRAWING ONLY OR PRODUCTION DRAWING ONLY THE ITEM IS NOT FOR SALE			
ITEM	PART NUMBER	DESCRIPTION	QTY
1	GA5078142	2" POLY STREET ELBOW-90 DEGREE	1
2	GA5077739	HOSE BARB, STRAIGHT, 2" MALE THREAD X 1 1/2" HOSE, BANJO, HB200-150	1
3	GA5077737	HOSE BARB, STRAIGHT, 2" MALE THREAD X 2" HOSE, BANJO, HB200	1
4	GA5078141	STREET ELBOW, 45 DEGREE, 2 MALE THREAD X 2 FEMALE THREAD, BANJO	1
5	GA4583370	THREADED TANK FLANGE 2"	1
GA4904815 GOLDACRES		TANK, FILL INLET 2", 45 DEGREE	REV 06

Tank inlet, 3”

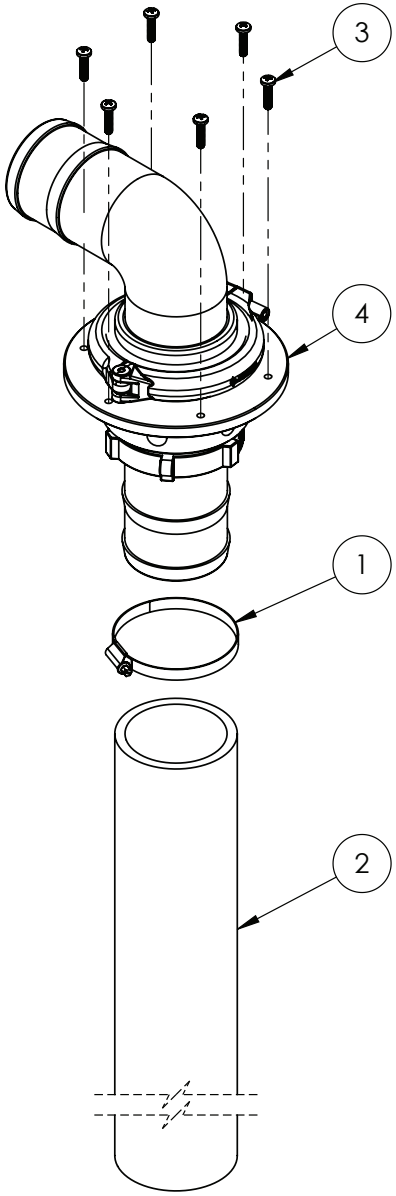

IF DESCRIPTION PREFIX IS ASSEMBLY DRAWING ONLY OR PRODUCTION DRAWING ONLY THE ITEM IS NOT FOR SALE			
ITEM	PART NUMBER	DESCRIPTION	QTY
1	GA5003835	HOSE CLAMP 3" SS (70-90/12W3)	1
2	GA2000231	HOSE, SUCTION, PVC, 75mm, BLACK, HOS75PVC, SOLD PER METER	1.7
3	GA5000527	SCREW PAN HEAD 12G X 25mm SS	6
4	GA4907840	TANK INLET, ASSEMBLY, 3"	1
GA4909125 GOLDACRES		ASSEMBLY DRAWING ONLY, 3" FILL	REV 01

Tank Inlet Assembly, 3”

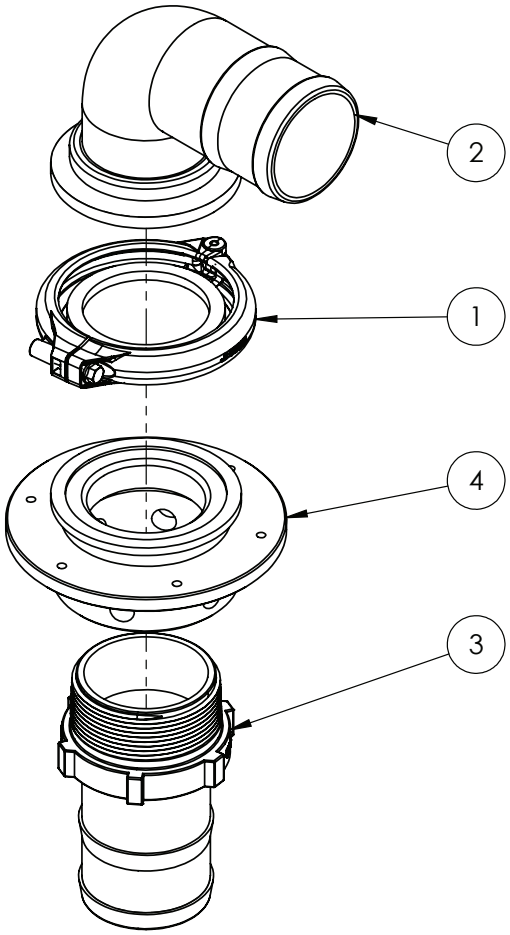

IF DESCRIPTION PREFIX IS ASSEMBLY DRAWING ONLY OR PRODUCTION DRAWING ONLY THE ITEM IS NOT FOR SALE			
ITEM	PART NUMBER	DESCRIPTION	QTY
1	GA2000116	FLANGE CLAMP, AND GASKET, 3", SERIES 300, HYPRO	1
2	GA5077875	HOSE BARB, ELBOW, 90 DEGREE, 3 FLANGE X 3 HOSE, BANJO, M300BRB90	1
3	GA5077741	HOSE BARB, STRAIGHT, 3 MALE THREAD X 3 HOSE, BANJO	1
4	GA4550590	TANK TOP INLET FITTING, 3" BANJO FLANGE AND 3" NPT FEMALE THREAD	1
GA4907840 GOLDACRES		TANK INLET, ASSEMBLY, 3"	REV 01

Single Agitator Plumbing, 5000L & 6500L

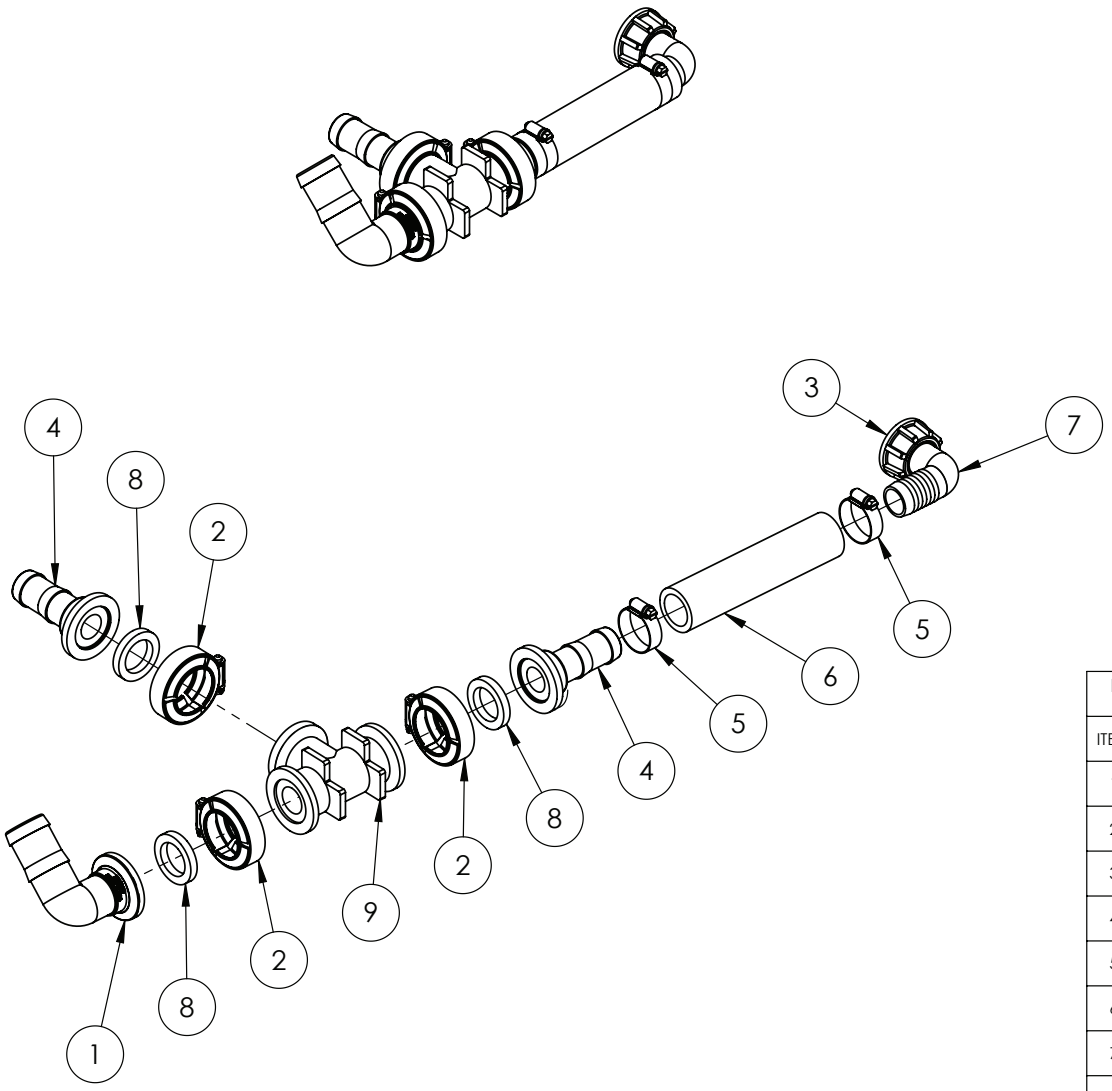

IF DESCRIPTION PREFIX IS ASSEMBLY DRAWING ONLY OR PRODUCTION DRAWING ONLY THE ITEM IS NOT FOR SALE			
ITEM	PART NUMBER	DESCRIPTION	QTY
1	GA5077807	1" FLANGE X 1 1/4" BARB, ELBOW, 90 DEGREE, M100125BRB90	1
2	GA5077664	CLAMP, WORM SCREW, 1", BANJO	3
3	GA5076602	FLY NUT, 1, ARAG, 2002040	1
4	GA5077811	HOSE BARB, STRAIGHT, 1 FLANGE X 1 HOSE, BANJO	2
5	GA5001681	HOSE CLAMP, 1" SS (20-32/12W)	2
6	GA2000219	HOSE, PRESSURE, 25mm, BLACK 250PSI, HOS25P, SOLD PER METER	0.15
7	GA5078296	PLUMBING FITTING, HOSE TAIL 1", ELBOW, 90 DEGREE, 25mm, SUIT FLY NUT, ARAG 116425	1
8	GA5077818	SEAL, SUIT 1 MANIFOLD FITTING, RUBBER EPDM, BANJO, M100G	3
9	GA5077823	TEE, 1 FLANGE X 1 FLANGE X 1 FLANGE, BANJO, M100TEE	1
GA4909230 GOLDACRES	ASSEMBLY DRAWING ONLY, TANK BOTTOM FITTINGS, PRAIRIE PRO, MY21		REV 00.B

Manifold Tee, 3”

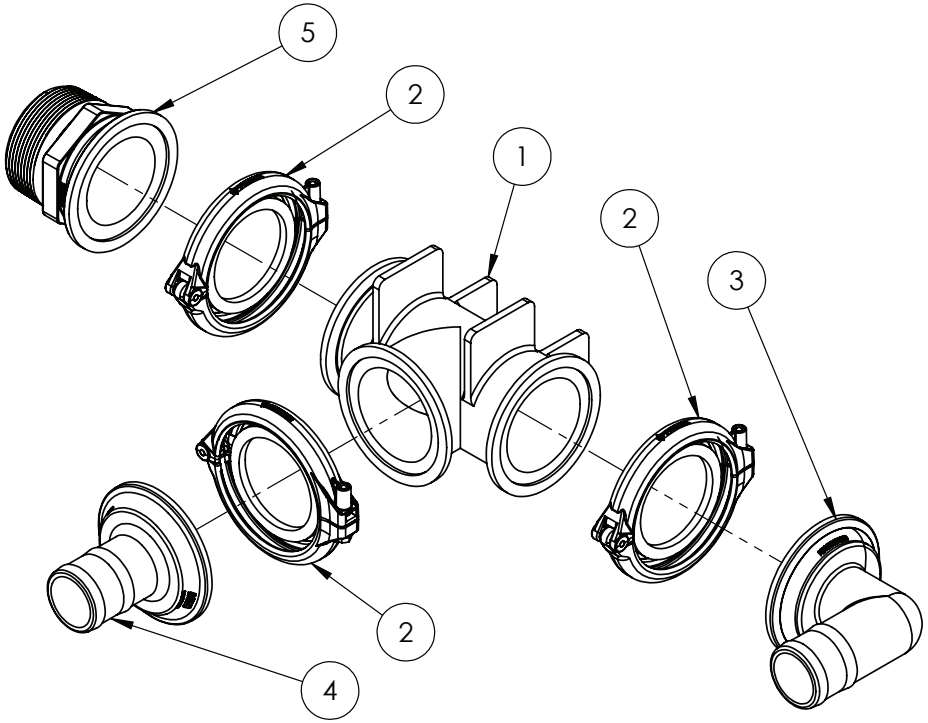

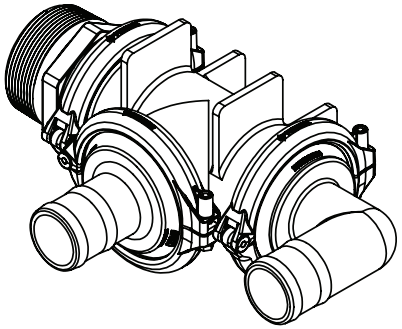

IF DESCRIPTION PREFIX IS ASSEMBLY DRAWING ONLY OR PRODUCTION DRAWING ONLY THE ITEM IS NOT FOR SALE			
ITEM	PART NUMBER	DESCRIPTION	QTY
1	GA5077881	3" MANIFOLD TEE	1
2	GA2000116	FLANGE CLAMP, AND GASKET, 3", SERIES 300, HYPRO	3
3	GA5077871	HOSE BARB, ELBOW, 90 DEGREE, 3" FLANGE X 2" HOSE BARB, BANJO	1
4	GA5077870	MNFLD HOSE BARB 3" X 2" BARB	1
5	GA5077879	PLUMBING ADAPTOR, 3 FLANGE X 3 MALE THREAD, BANJO	1
GA4909240 GOLDACRES		ASSEMBLY DRAWING ONLY, SUCTION OUTLET FITTINGS, 10000L, PRAIRIE PRO, MY21	REV 00

Handle, Tank Drain, 5000L - 6500L

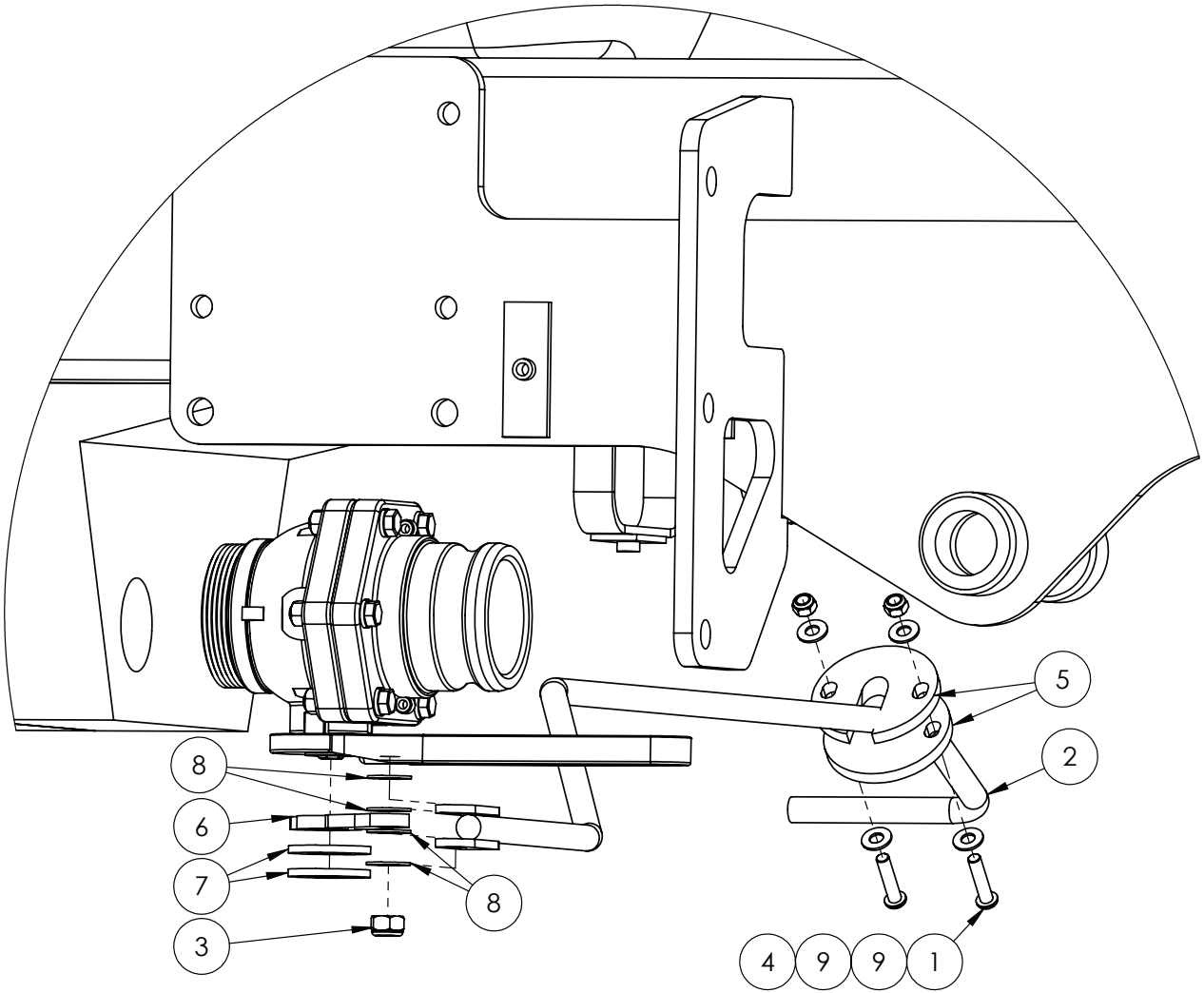

IF DESCRIPTION PREFIX IS ASSEMBLY DRAWING ONLY OR PRODUCTION DRAWING ONLY THE ITEM IS NOT FOR SALE			
ITEM	PART NUMBER	DESCRIPTION	QTY
1	GA5051370	BHCS M8 X 35 SS A2-70	2
2	GA4603225	HANDLE, TANK DRAIN, 5000L & 6500L, PRAIRIE PRO, 2021	1
3	GA5012461	NUT M12 NYLOC ZP	1
4	GA5052590	NUT M8 NYLOC SS	2
5	GA4551670	PAD, TANK DRAIN HANDLE, LH POD, PRAIRIE PRO, 2021	2
6	GA4400290	PLATE, REMOTE VALVE TAP LINK, 3" DRAIN, G8	1
7	GA5017681	WASHER 1 X 2 7G FLAT THIN SS	2
8	GA5000577	WASHER 12mm FLAT SS HD	4
9	GA5003643	WASHER 8mm FLAT SS HD	4
GA7800101 GOLDACRES	HANDLE, TANK DRAIN, 5000L - 6000L		REV 00

Handle, Tank Drain, 8500L - 10,000L

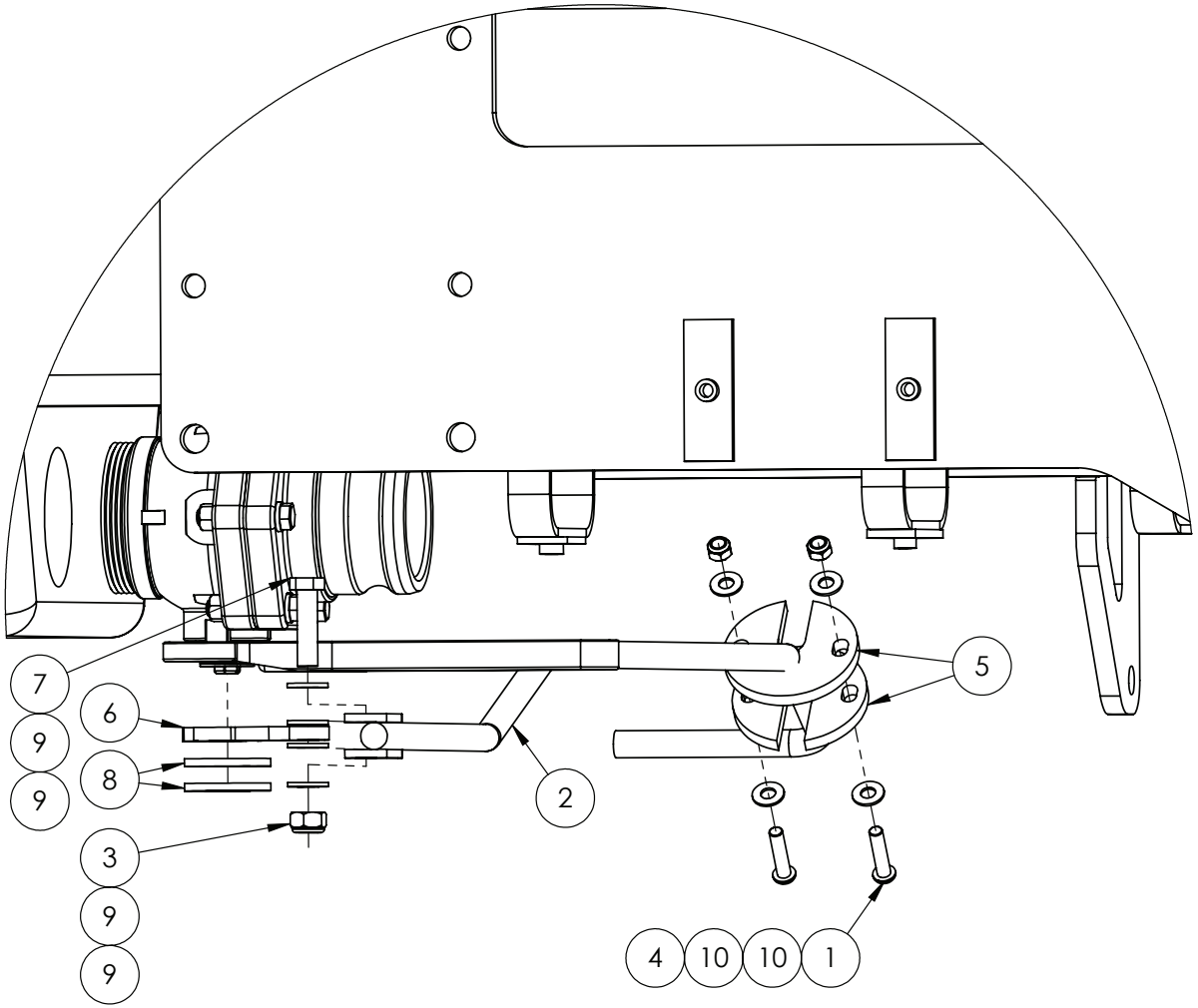

IF DESCRIPTION PREFIX IS ASSEMBLY DRAWING ONLY OR PRODUCTION DRAWING ONLY THE ITEM IS NOT FOR SALE			
ITEM	PART NUMBER	DESCRIPTION	QTY
1	GA5051370	BHCS M8 X 35 SS A2-70	2
2	GA4603235	HANDLE, TANK DRAIN, 8500L & 10000L, PRAIRIE PRO, 2021	1
3	GA5012461	NUT M12 NYLOC ZP	1
4	GA5052590	NUT M8 NYLOC SS	2
5	GA4551670	PAD, TANK DRAIN HANDLE, LH POD, PRAIRIE PRO, 2021	2
6	GA4400290	PLATE, REMOTE VALVE TAP LINK, 3" DRAIN, G8	1
7	GA5000327	SET SCREW M12 X 45 GR8.8 ZP	1
8	GA5017681	WASHER 1 X 2 7G FLAT THIN SS	2
9	GA5000577	WASHER 12mm FLAT SS HD	4
10	GA5003643	WASHER 8mm FLAT SS HD	4
GA7800102 GOLDACRES	HANDLE, TANK DRAIN, 8500L - 10,000L		REV 00

Bracket, Tank Strap

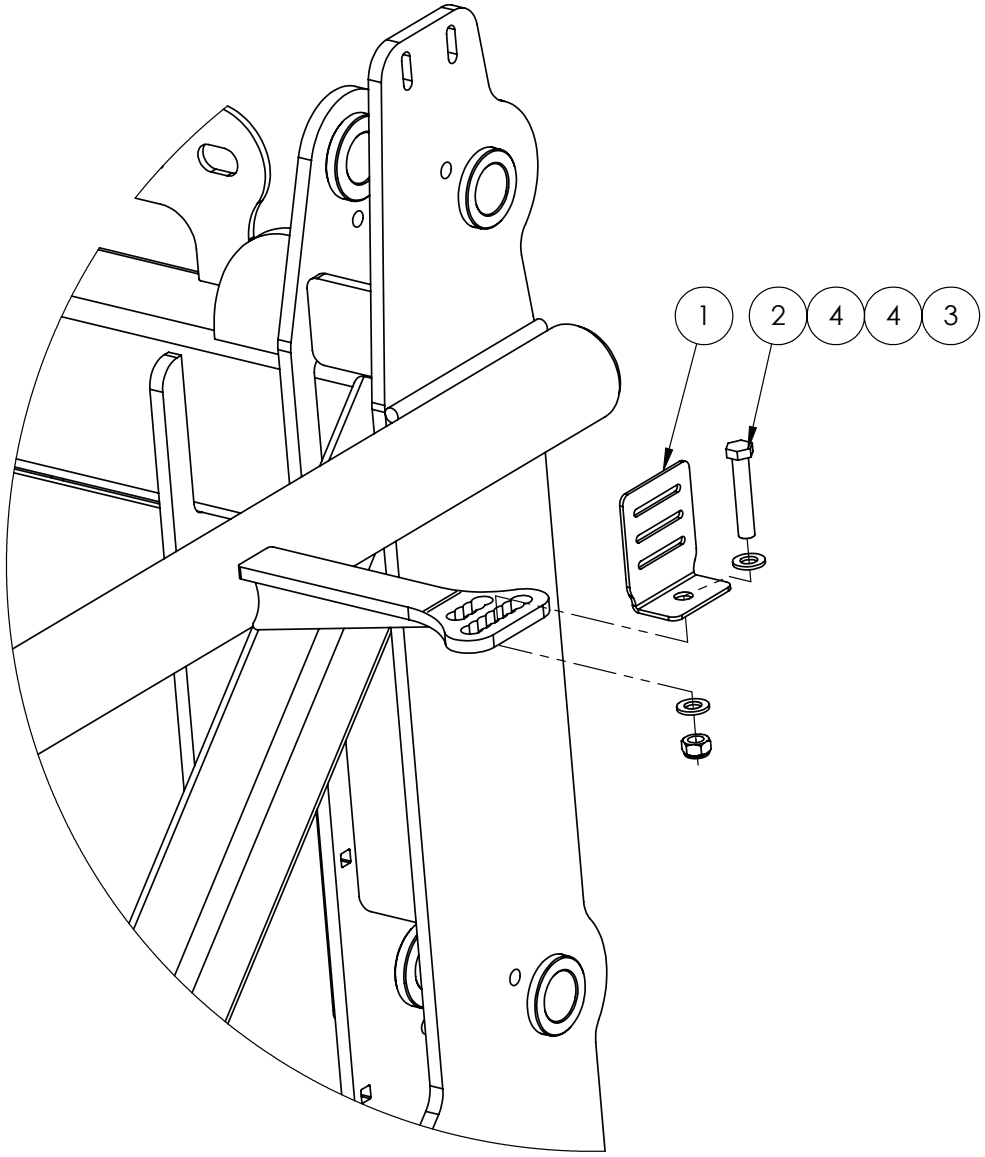

IF DESCRIPTION PREFIX IS ASSEMBLY DRAWING ONLY OR PRODUCTION DRAWING ONLY THE ITEM IS NOT FOR SALE			
ITEM	PART NUMBER	DESCRIPTION	QTY
1	F70127A	50mm TANK STRAP BRACKET	1
2	GA5000339	BOLT M12 X 65 GR8.8 ZP	1
3	GA5012461	NUT M12 NYLOC ZP	1
4	GA5000577	WASHER 12mm FLAT SS HD	2
GA7800100 GOLDACRES		TANK STRAP BRACKET, LF PRAIRIE SPECIAL S2 MY23	REV 00

06 - Side Modules & Controls

RH Pod Cover

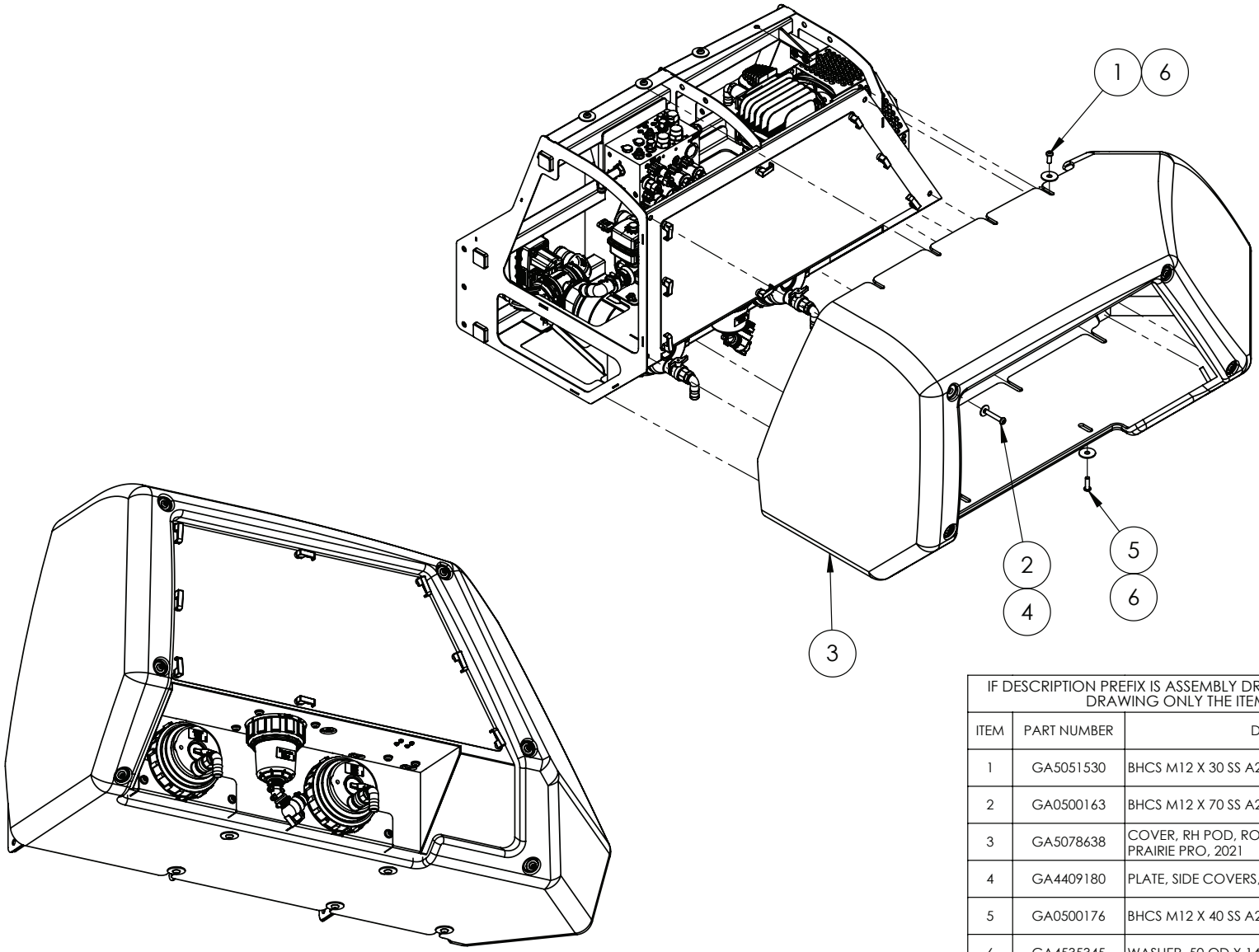

IF DESCRIPTION PREFIX IS ASSEMBLY DRAWING ONLY OR PRODUCTION DRAWING ONLY THE ITEM IS NOT FOR SALE			
ITEM	PART NUMBER	DESCRIPTION	QTY
1	GA5051530	BHCS M12 X 30 SS A2-70	4
2	GA0500163	BHCS M12 X 70 SS A2-70	6
3	GA5078638	COVER, RH POD, ROTOMOULDED PLATIC, BLACK, PRAIRIE PRO, 2021	1
4	GA4409180	PLATE, SIDE COVERS, WASHER, G6 MY20	6
5	GA0500176	BHCS M12 X 40 SS A2-70	5
6	GA4535345	WASHER, 50 OD X 14.5 ID, SS	9
GA6100990 GOLDACRES		RH POD ASSEMBLY, PRAIRIE PRO, 2021	REV 03.B

RH Pod, Cover Plate

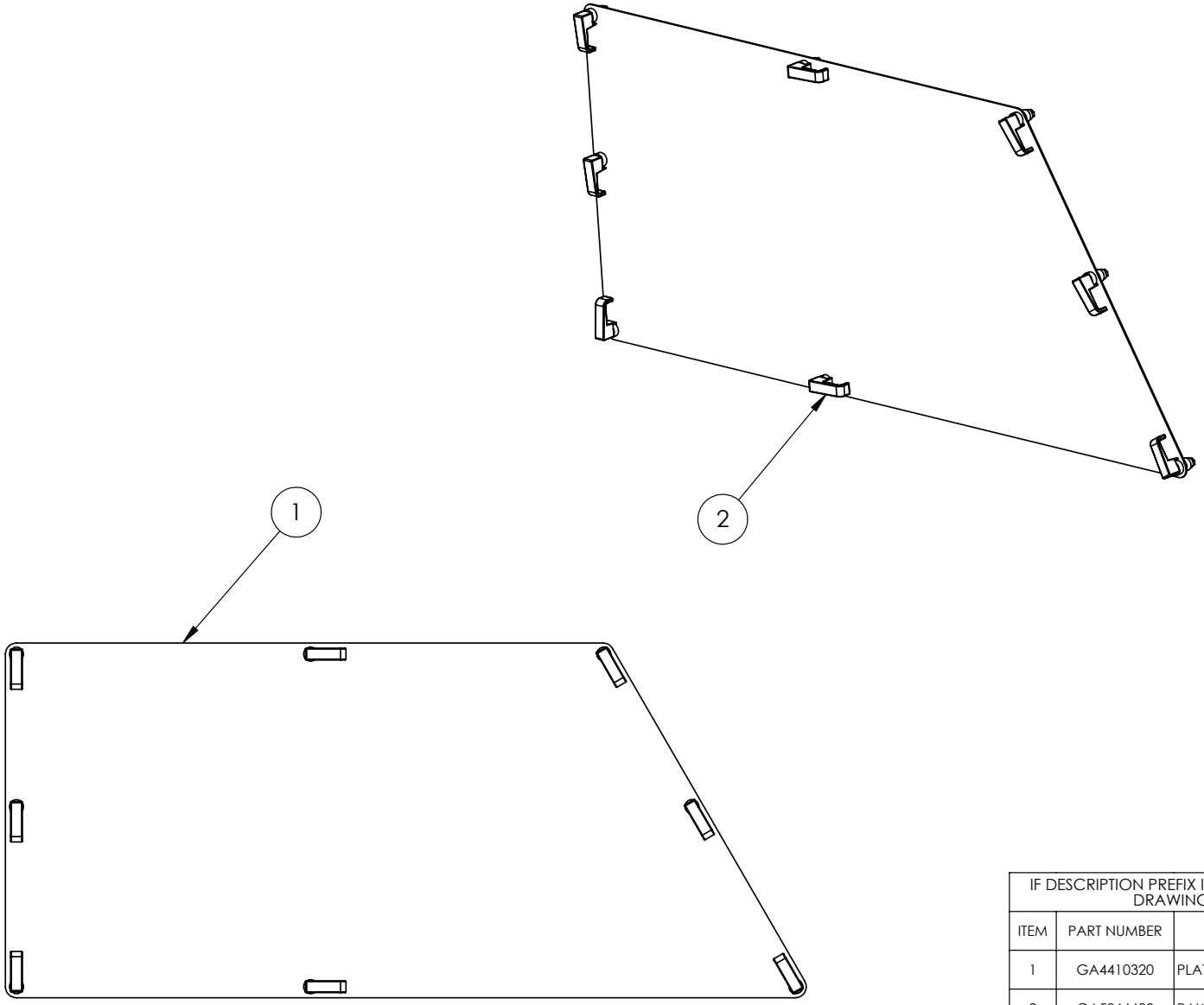

IF DESCRIPTION PREFIX IS ASSEMBLY DRAWING ONLY OR PRODUCTION DRAWING ONLY THE ITEM IS NOT FOR SALE			
ITEM	PART NUMBER	DESCRIPTION	QTY
1	GA4410320	PLATE, RH POD, COVER PLATE, PRAIRIE PRO, 2021	1
2	GA5066600	RAWL ACTION LATCH BLACK	8
GA6100990 GOLDACRES		RH POD ASSEMBLY, PRAIRIE PRO, 2021	REV 02

RH Pod, Suction Filters

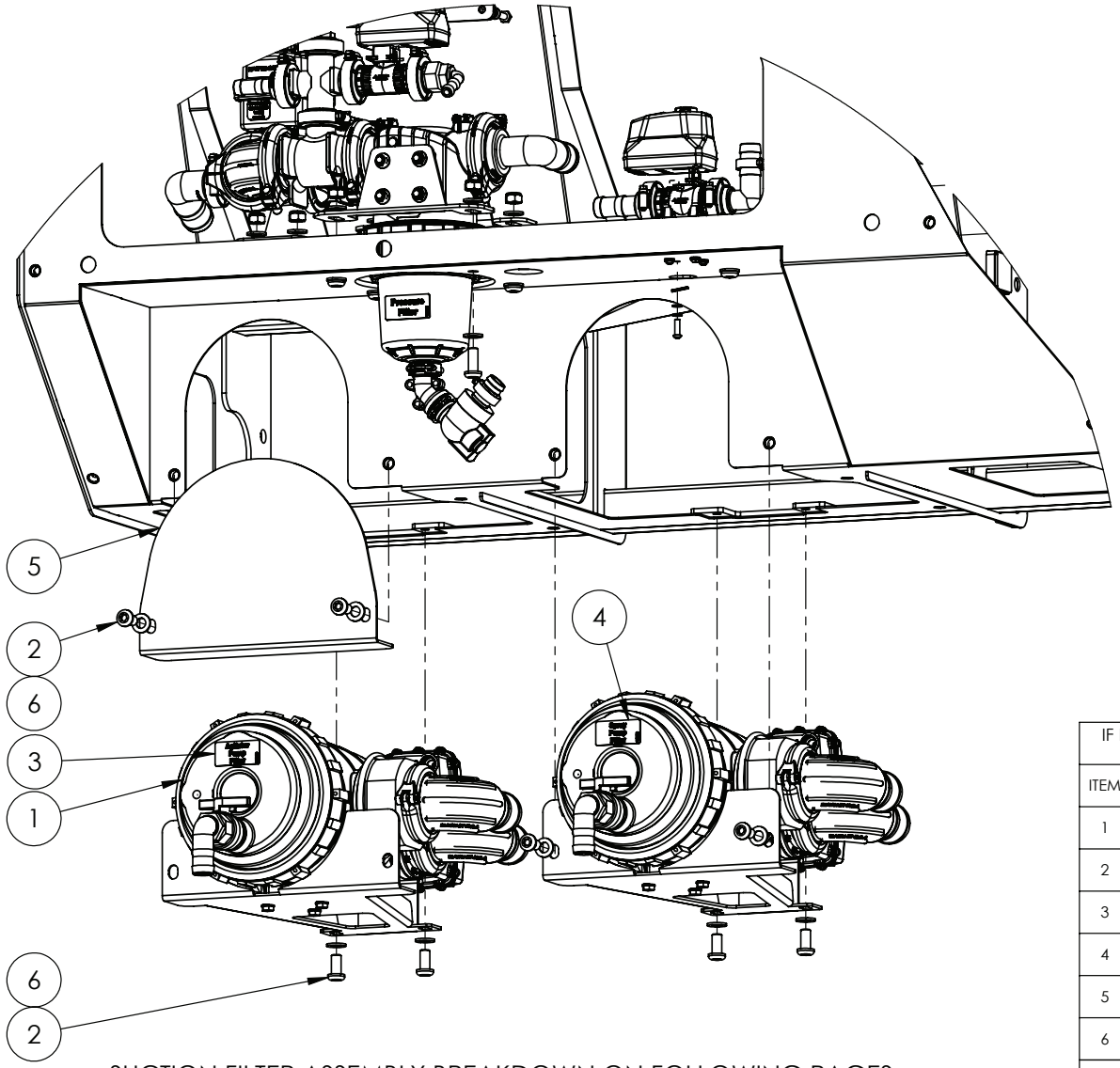

SUCTION FILTER ASSEMBLY BREAKDOWN ON FOLLOWING PAGES

IF DESCRIPTION PREFIX IS ASSEMBLY DRAWING ONLY OR PRODUCTION DRAWING ONLY THE ITEM IS NOT FOR SALE			
ITEM	PART NUMBER	DESCRIPTION	QTY
1	GA4951110	ASSEMBLY DRAWING ONLY, SUCTION FILTER, PRAIRIE PRO, 2021	2
2	GA5000291	BHCS M12 X 25 SS A2-70	8
3	GA8701502	DECAL, AGITATOR PUMP FILTER	1
4	GA8701503	DECAL, SPRAY PUMP FILTER	1
5	GA4410555	PLATE, RH POD, SUCTION FILTER BLANK, PRAIRIE PRO, 2021	1
6	GA5000577	WASHER 12mm FLAT SS HD	8
GA6100990 GOLDACRES		RH POD ASSEMBLY, PRAIRIE PRO, 2021	REV 02

RH Pod, Suction Filter Mounting Assembly

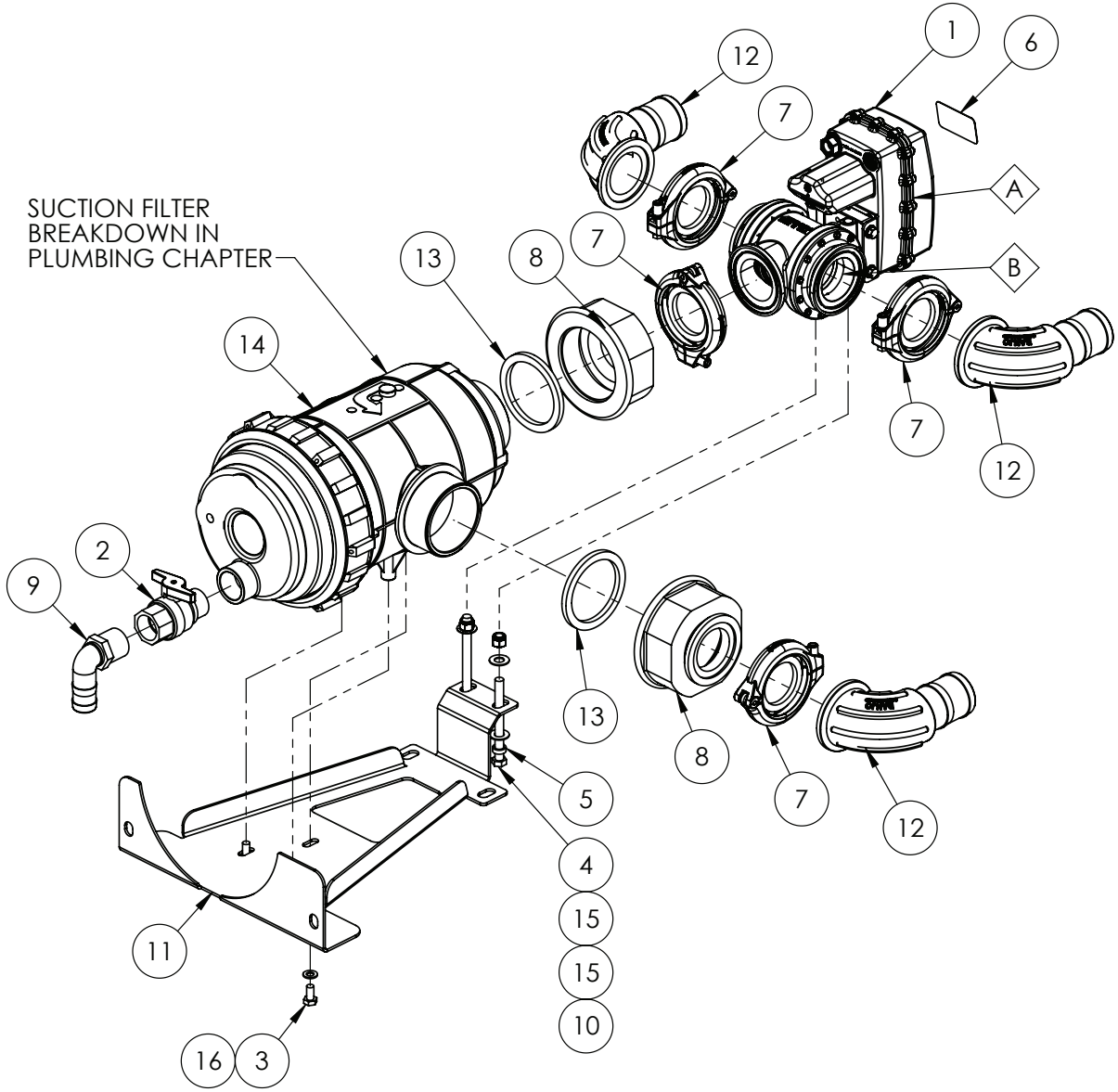

REPLACEMENT PARTS			
ITEM	PART NUMBER	DESCRIPTION	QTY
A	GA2000160	BALL VALVE, ACTUATOR ONLY, SUIT GA2000143, KZ VALVE	1
B	GA2000156	BALL VALVE, VALVE ONLY, SUIT GA2000143, KZ VALVE	1

IF DESCRIPTION PREFIX IS ASSEMBLY DRAWING ONLY OR PRODUCTION DRAWING ONLY THE ITEM IS NOT FOR SALE			
ITEM	PART NUMBER	DESCRIPTION	QTY
1	GA2000143	BALL VALVE, MOTORISED, 3 WAY, 2" FLANGE CONNECTION, BOTTOM LOAD ON/OFF/ON, 3 SECOND, KZ VALVE	1
2	GA5067620	BALL VALVE, 1" MALE / FEMALE, TEE HANDLE, BRASS	1
3	GA5011465	BOLT M8 X 16 GR8.8 ZP	3
4	GA0500039	BOLT, 3/8" X 4" UNC ZP, GR8	2
5	GA4552080	CRUSH TUBE, 10.2 ID X 15 OD X 5 mm LONG	2
6	GA8701104	DECAL, TANK SUCTION VALVE	1
7	GA2000115	FLANGE CLAMP, AND GASKET, 2", SERIES 220, HYPRO	4
8	GA4550450	FLANGE, M220 X 3" BSP FEMALE, PLASTIC	2
9	GA5077723	HOSE BARB, ELBOW, 90 DEGREE, 1" MALE X 1" HOSE, BANJO	1
10	GA5048345	NUT 3/8", NYLOC, ZP, UNC	2
11	GA4410345	PLATE, RH POD, SUCTION FILTER BRACKET, PRAIRIE PRO, 2021	1
12	GA2000071	PLUMBING FITTING, SWEEP ELBOW, 90, 2" FLANGE TO 2" BARB, M220BRBSWP90, BANJO	3
13	GA5076723	SEAL, EPDM, SUIT 3 FLANGE FITTING, BANJO, 300G	2
14	GA2000101	SUCTION FILTER, 3" 32 MESH, 3" BSP MALE THREADS, ARAG	1
15	GA5002563	WASHER 3/8" X 7/8" FLAT SS	4
16	GA5003643	WASHER 8mm FLAT SS HD	3
GA4951110 GOLDACRES	ASSEMBLY DRAWING ONLY, SUCTION FILTER, PRAIRIE PRO, 2021		REV 01.B

RH Pod, Pressure Filter & Regulator Valve

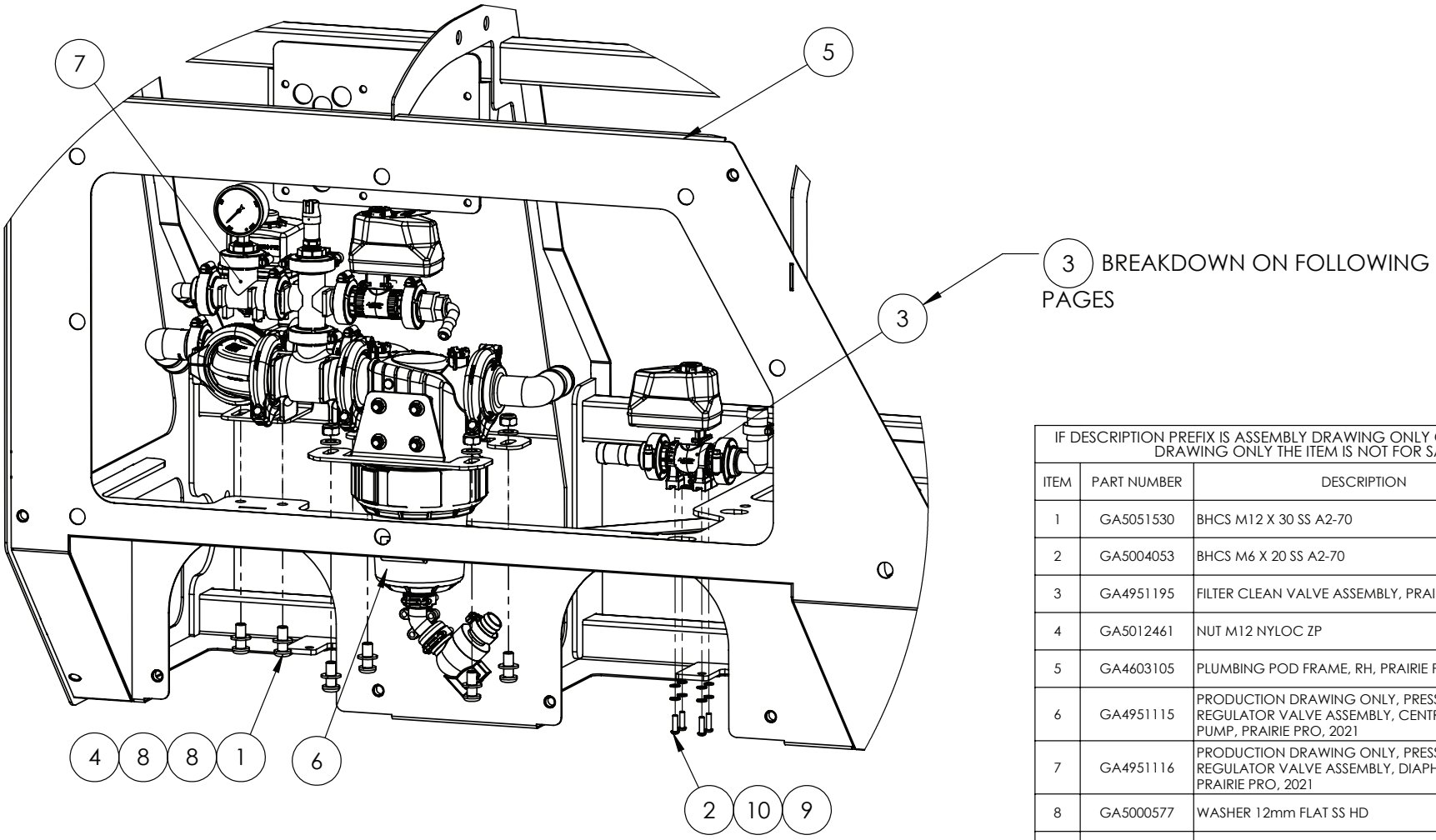

IF DESCRIPTION PREFIX IS ASSEMBLY DRAWING ONLY OR PRODUCTION DRAWING ONLY THE ITEM IS NOT FOR SALE			
ITEM	PART NUMBER	DESCRIPTION	QTY
1	GA5051530	BHCS M12 X 30 SS A2-70	6
2	GA5004053	BHCS M6 X 20 SS A2-70	4
3	GA4951195	FILTER CLEAN VALVE ASSEMBLY, PRAIRIE PRO, 2021	1
4	GA5012461	NUT M12 NYLOC ZP	6
5	GA4603105	PLUMBING POD FRAME, RH, PRAIRIE PRO, 2021	1
6	GA4951115	PRODUCTION DRAWING ONLY, PRESSURE AND REGULATOR VALVE ASSEMBLY, CENTRIFUGAL PUMP, PRAIRIE PRO, 2021	1
7	GA4951116	PRODUCTION DRAWING ONLY, PRESSURE AND REGULATOR VALVE ASSEMBLY, DIAPHRAM PUMP PRAIRIE PRO, 2021	1
8	GA5000577	WASHER 12mm FLAT SS HD	12
9	GA5004437	WASHER 6mm FLAT SS	4
10	GA5004447	WASHER 6mm SPRING SS	4
GA6100990 GOLDACRES	RH POD ASSEMBLY, PRAIRIE PRO, 2021		REV 02

Valve Assembly, Pressure & Regulator, Centrifugal Pump

ITEM	PART NUMBER	DESCRIPTION	QTY
A	GA2000066	REGULATOR VALVE, ACTUATOR ONLY, 0.8 SEC 12V, SUIT GA2000065, KZ VALVE	1
B	GA2000067	REGULATOR VALVE, VALVE ONLY, SUIT GA2000065, KZ VALVE	1
C	GA2000154	BALL VALVE, VALVE ONLY, SUIT GA2000141, KZ VALVE	1
D	GA2000158	ACTUATOR SUIT BALL VALVE, 1" FLANGE CONNECTION, TX2, KZ VALVE	1

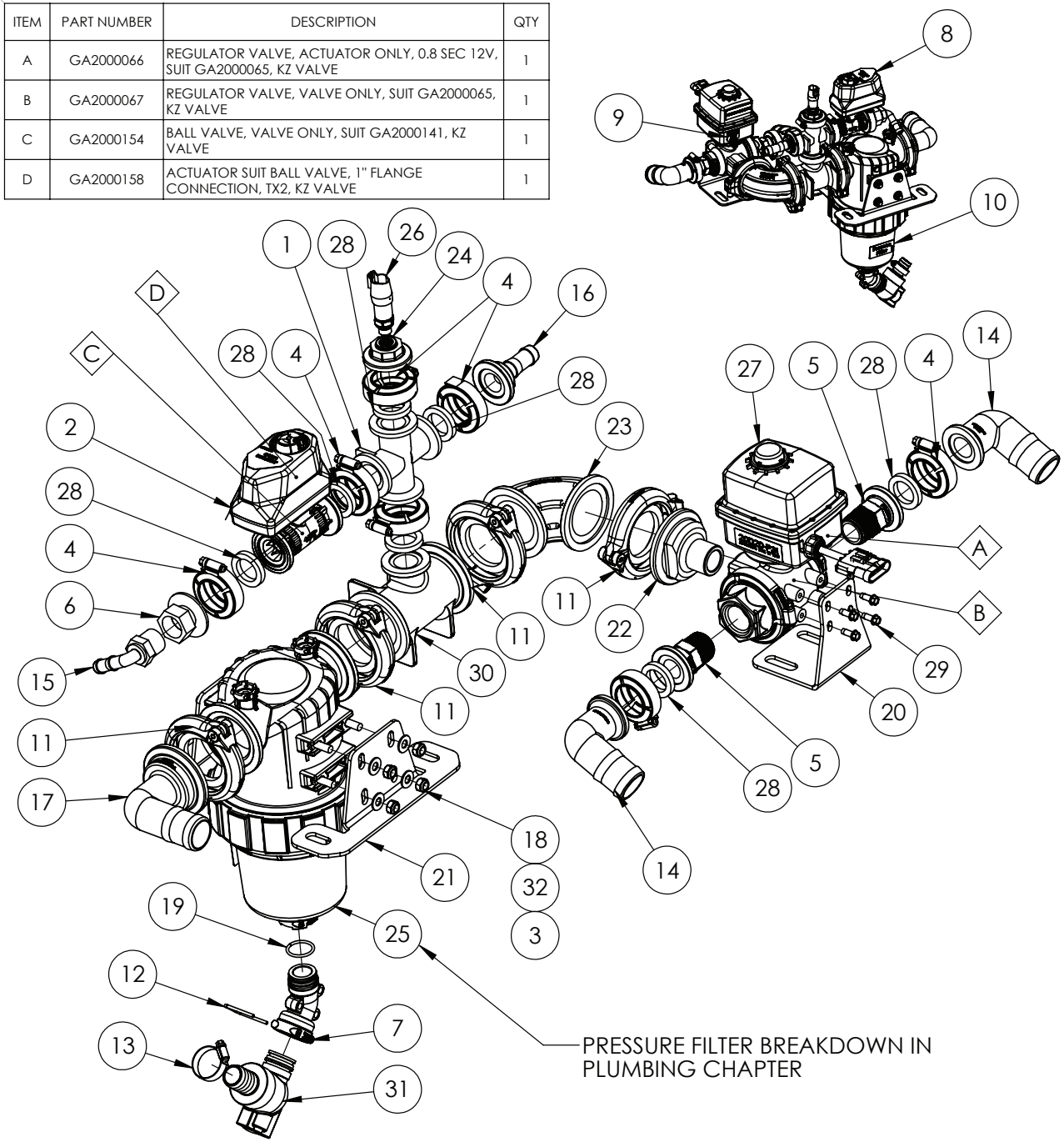

IF DESCRIPTION PREFIX IS ASSEMBLY DRAWING ONLY OR PRODUCTION DRAWING ONLY THE ITEM IS NOT FOR SALE			
ITEM	PART NUMBER	DESCRIPTION	QTY
1	GA5077816	1" FLANGED CROSS	1
2	GA2000141	BALL VALVE, MOTORIZED, 2 WAY, 1" FLANGE CONNECTION, 0.5 SECOND, KZ VALVE, TX2	1
3	GA5004085	BOLT M8 X 20 GR8.8 ZP	8
4	GA5077664	CLAMP, WORM SCREW, 1", BANJO	7
5	GA5077820	COUPLING, FLANGED, 1 FLANGE X 1 MALE THREAD, BANJO	2
6	GA5077804	COUPLING, 1" FLANGE X 3/4" FEMALE THREAD, BANJO	1
7	GA2000391	COUPLING, 45°, ARAG T3 FORK M-F, 129533, SUIT PRESSURE FILTER GA2000563	1
8	GA8701605	DECAL, AGITATOR VALVE	1
9	GA8701101	DECAL, BOOM FLOW REGULATING VALVE	1
10	GA8701504	DECAL, PRESSURE FILTER	1
11	GA2000115	FLANGE CLAMP, AND GASKET, 2", SERIES 220, HYPRO	4
12	GA2000252	FORK D.3, DIST.29, SUIT PRESSURE FILTER GA2000563, ARAG, 010003	1
13	GA5016813	HOSE CLAMP, 1 SS (25-40/12W)	1
14	GA2000138	HOSE BARB, ELBOW, 90 DEGREE, 1" FLANGE, X 1 1/2" HOSE, BANGO M100150BRB90	2
15	GA5077710	HOSE BARB, ELBOW, 90 DEGREE, 3/4 MALE THREAD X 1/2 HOSE, BANJO	1
16	GA5077802	HOSE BARB, STRAIGHT, 1" FLANGE X 3/4" HOSE, BANJO, M100075BRB	1
17	GA5077856	HOSE BARB, 2" FP FLANGE, 1-1/2" HB, 90 DEGREE	1
18	GA5004917	NUT M8 NYLOC ZP	8
19	GA2000251	O-RING, BLANK CAP, SUIT PRESSURE FILTER GA2000563, ARAG, G11058V	1
20	GA4410355	PLATE, RH POD, BOOM REGULATOR VALVE MOUNT, PRAIRIE PRO, 2021	1
21	GA4410350	PLATE, RH POD, PRESSURE FILTER MOUNT, PRAIRIE PRO, 2021	2
22	GA4551165	PLUMBING COUPLING, M220 FLANGE TO 1" MALE NPT THREAD	1
23	GA2000344	PLUMBING FITTING, SWEPT ELBOW, 90, 2", M220 FLANGE, M220SWP90, BANJO	1
24	GA5077822	PLUMBING COUPLING, 1 FLANGE X 1/4 FEMALE THREAD, BANJO, M100PLG025	1
25	GA2000563	PRESSURE FILTER, 2", 100 MESH, ARAG SERIES 330	1
26	GA3000316	PRESSURE SENSOR TRANSDUCER, 0-25 BAR, 0.5-4.5V, IFM	1
27	GA2000065	REGULATOR VALVE, 1" NPT, FULL PORT, 3 WAY, 0.8 SEC 12V, KZ VALVE	1
28	GA5077818	SEAL, SUIT 1 MANIFOLD FITTING, RUBBER EPDM, BANJO, M100G	7
29	GA0500022	SET SCREW SELF TAPPING TRILOBE M6 X 16 ZP	4
30	GA2000046	TEE, 2" FULL PORT X 2" FULL PORT X 1", FLANGE, BANJO	1
31	GA2000564	VALVE, BALL, DRAIN FOR FILTER 330 SERIES	1
32	GA5003643	WASHER 8mm FLAT SS HD	8
GA4951115 GOLDACRES		PRODUCTION DRAWING ONLY, PRESSURE AND REGULATOR VALVE ASSEMBLY, CENTRIFUGAL PUMP, PRAIRIE PRO, 2021	REV 01

Filter Clean Valve, Assembly

REPLACEMENT PARTS			
ITEM	PART NUMBER	DESCRIPTION	QTY
A	GA2000158	ACTUATOR SUIT BALL VALVE, 1" FLANGE CONNECTION, TX2, KZ VALVE	-
B	GA2000154	BALL VALVE, VALVE ONLY, SUIT GA2000141, KZ VALVE	-

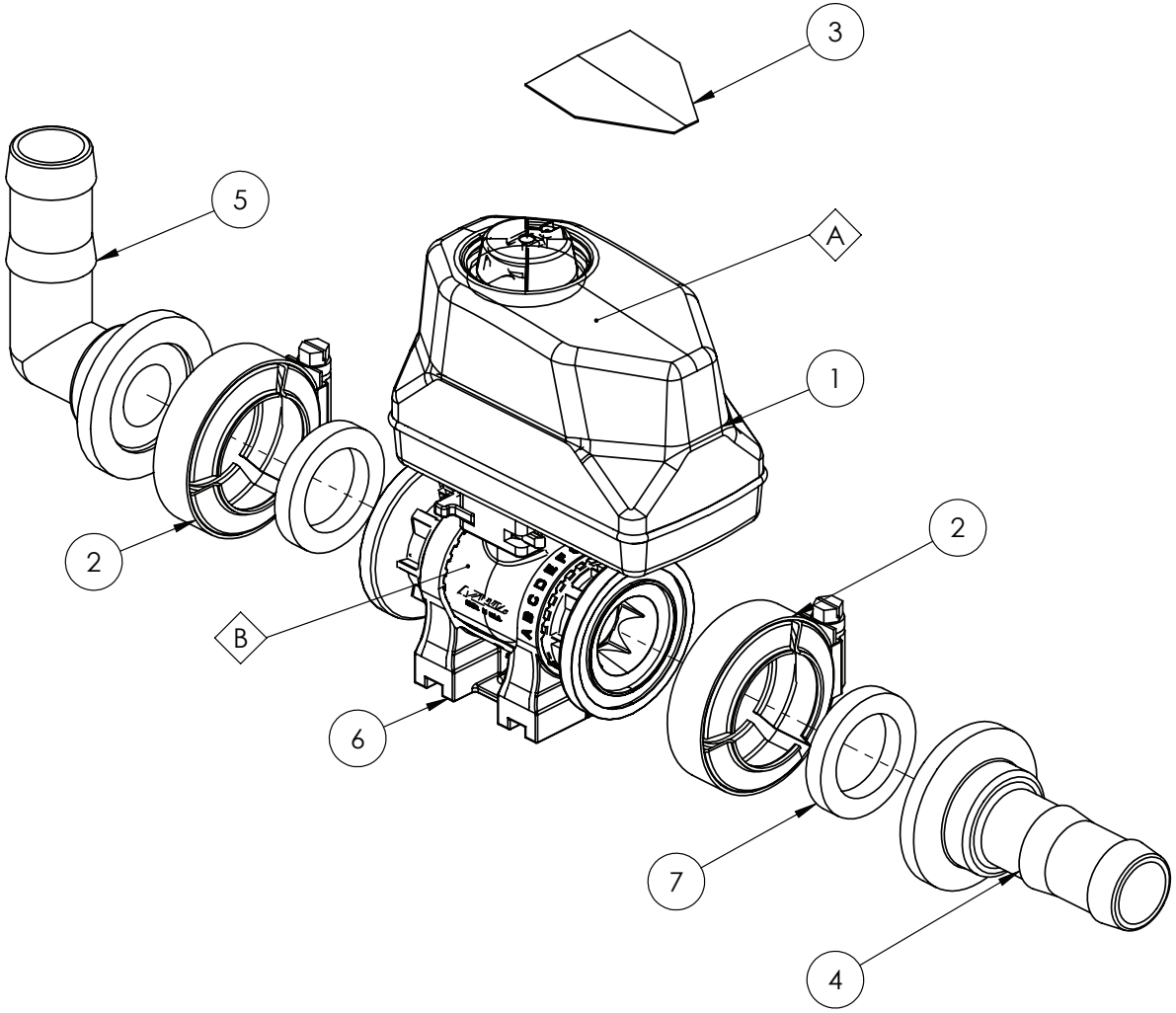

IF DESCRIPTION PREFIX IS ASSEMBLY DRAWING ONLY OR PRODUCTION DRAWING ONLY THE ITEM IS NOT FOR SALE			
ITEM	PART NUMBER	DESCRIPTION	QTY
1	GA2000141	BALL VALVE, MOTORIZED, 2 WAY, 1" FLANGE CONNECTION, 0.5 SECOND, KZ VALVE, TX2	1
2	GA5077664	CLAMP, WORM SCREW, 1", BANJO	2
3	GA8701495	DECAL, SELF CLEANING FILTER VALVE WITH DRAIN, G6, PRO, SERIES 2	1
4	GA5077811	HOSE BARB, STRAIGHT, 1 FLANGE X 1 HOSE, BANJO	1
5	GA5077812	HOSE BARB, ELBOW, 90 DEGREE, 1 FLANGE X 1 HOSE, BANJO	1
6	GA2000145	MOUNTING BRACKET TX2 ELECTRIC BALL VALVE KIT, KZ VALVE	1
7	GA5077818	SEAL, SUIT 1 MANIFOLD FITTING, RUBBER EPDM, BANJO, M100G	2
GA4951195 GOLDACRES		FILTER CLEAN VALVE ASSEMBLY, PRAIRIE PRO, 2021	REV 00

RH Pod, Hydraulic Manifold & Compressor Mounting

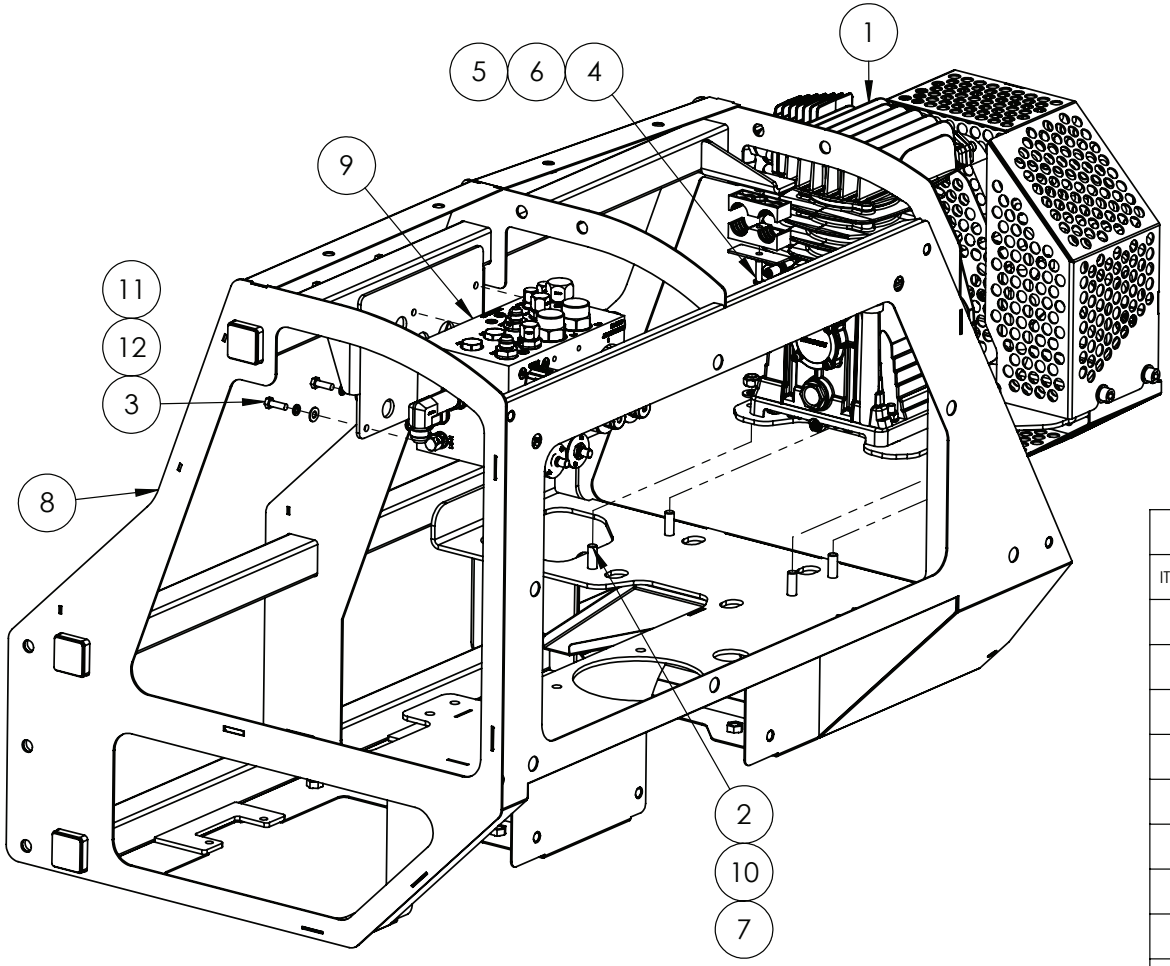

IF DESCRIPTION PREFIX IS ASSEMBLY DRAWING ONLY OR PRODUCTION DRAWING ONLY THE ITEM IS NOT FOR SALE			
ITEM	PART NUMBER	DESCRIPTION	QTY
1	GA4951105	ASSEMBLY DRAWING ONLY, AIR COMPRESSOR, PRAIRIE PRO, 2021	1
2	GA0500079	BHCS M12 X 40 GR12.9 ZP	4
3	GA5004711	BOLT M8 X 25 GR8.8 ZP	6
4	GA5004727	BOLT M8 X 50 GR8.8 ZP	1
5	GA5078038	MOUNTING CLAMP, DOUBLE TYPE, JAW, PAIR, GROUP 4, 28mm, RCD-28J	2
6	GA5078049	MOUNTING CLAMP, DOUBLE TYPE, PLATE, TOP, GROUP 4, RCD-4PT	1
7	GA5012461	NUT M12 NYLOC ZP	4
8	GA4603105	PLUMBING POD FRAME, RH, PRAIRIE PRO, 2021	1
9	GA6101740	PRODUCTION DRAWING ONLY. HYDRAULIC MANIFOLD ASSEMBLY, PRAIRIE PRO MY21	1
10	GA5000577	WASHER 12mm FLAT SS HD	8
11	GA5003643	WASHER 8mm FLAT SS HD	6
12	GA5004919	WASHER 8mm SPRING SS	7
GA6100990 GOLDACRES		RH POD ASSEMBLY, PRAIRIE PRO, 2021	REV 02

Hydraulic Manifold Assembly, Chassis Control

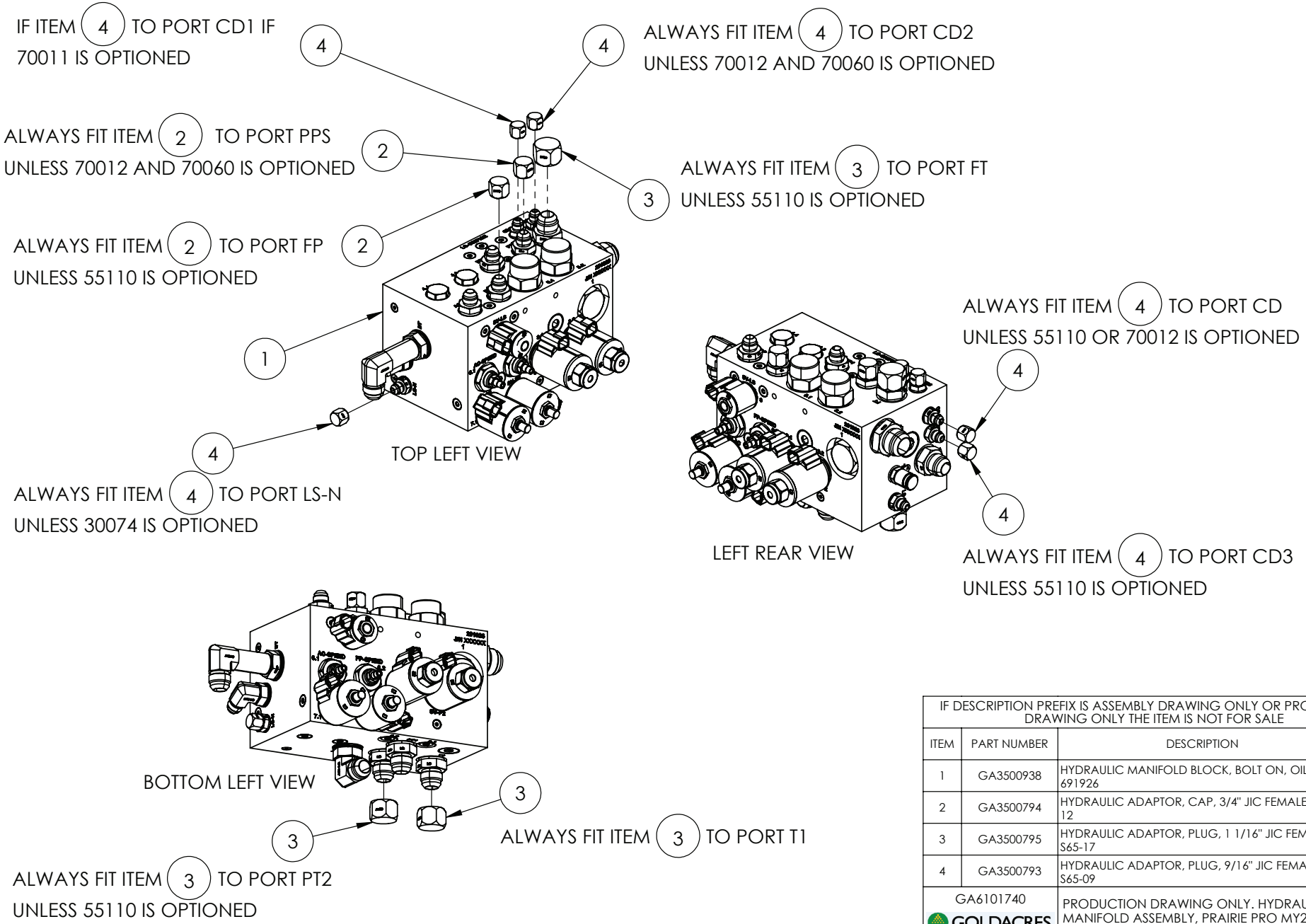

IF DESCRIPTION PREFIX IS ASSEMBLY DRAWING ONLY OR PRODUCTION DRAWING ONLY THE ITEM IS NOT FOR SALE			
ITEM	PART NUMBER	DESCRIPTION	QTY
1	GA3500938	HYDRAULIC MANIFOLD BLOCK, BOLT ON, OILPATH, 691926	1
2	GA3500794	HYDRAULIC ADAPTOR, CAP, 3/4" JIC FEMALE, S65-12	2
3	GA3500795	HYDRAULIC ADAPTOR, PLUG, 1 1/16" JIC FEMALE, S65-17	3
4	GA3500793	HYDRAULIC ADAPTOR, PLUG, 9/16" JIC FEMALE, S65-09	5
GA6101740 GOLDACRES		PRODUCTION DRAWING ONLY. HYDRAULIC MANIFOLD ASSEMBLY, PRAIRIE PRO MY21	REV 00

RH Pod, Compressor Guard

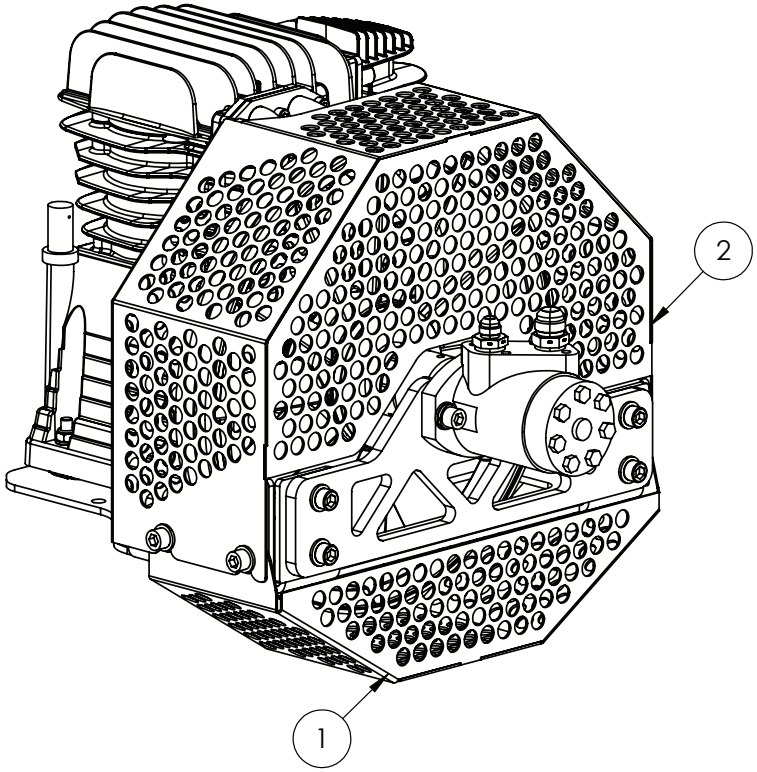

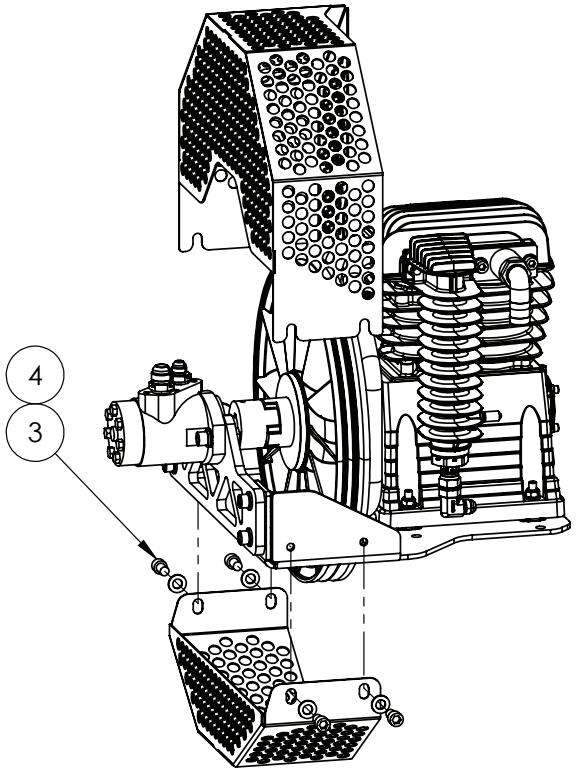

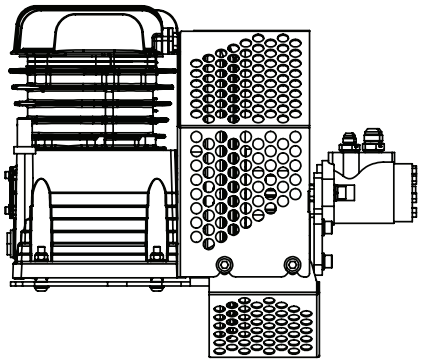

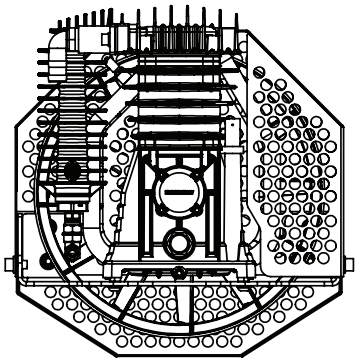

IF DESCRIPTION PREFIX IS ASSEMBLY DRAWING ONLY OR PRODUCTION DRAWING ONLY THE ITEM IS NOT FOR SALE			
ITEM	PART NUMBER	DESCRIPTION	QTY
1	GA4603250	GUARD, AIR COMPRESSOR FAN LOWER, PRAIRIE PRO, 2021	1
2	GA4603245	GUARD, AIR COMPRESSOR FAN UPPER, PRAIRIE PRO, 2021	1
3	GA5049165	SHCS M12 X 16 GR12.9 ZP	4
4	GA5000577	WASHER 12mm FLAT SS HD	4
5	GA4553234	COUPLING, AIR COMPRESSOR DRIVE, PRAIRIE PRO 2021	1
GA4951105 GOLDACRES		ASSEMBLY DRAWING ONLY, AIR COMPRESSOR, PRAIRIE PRO, 2021	REV 03

RH Pod, Compressor Breakdown

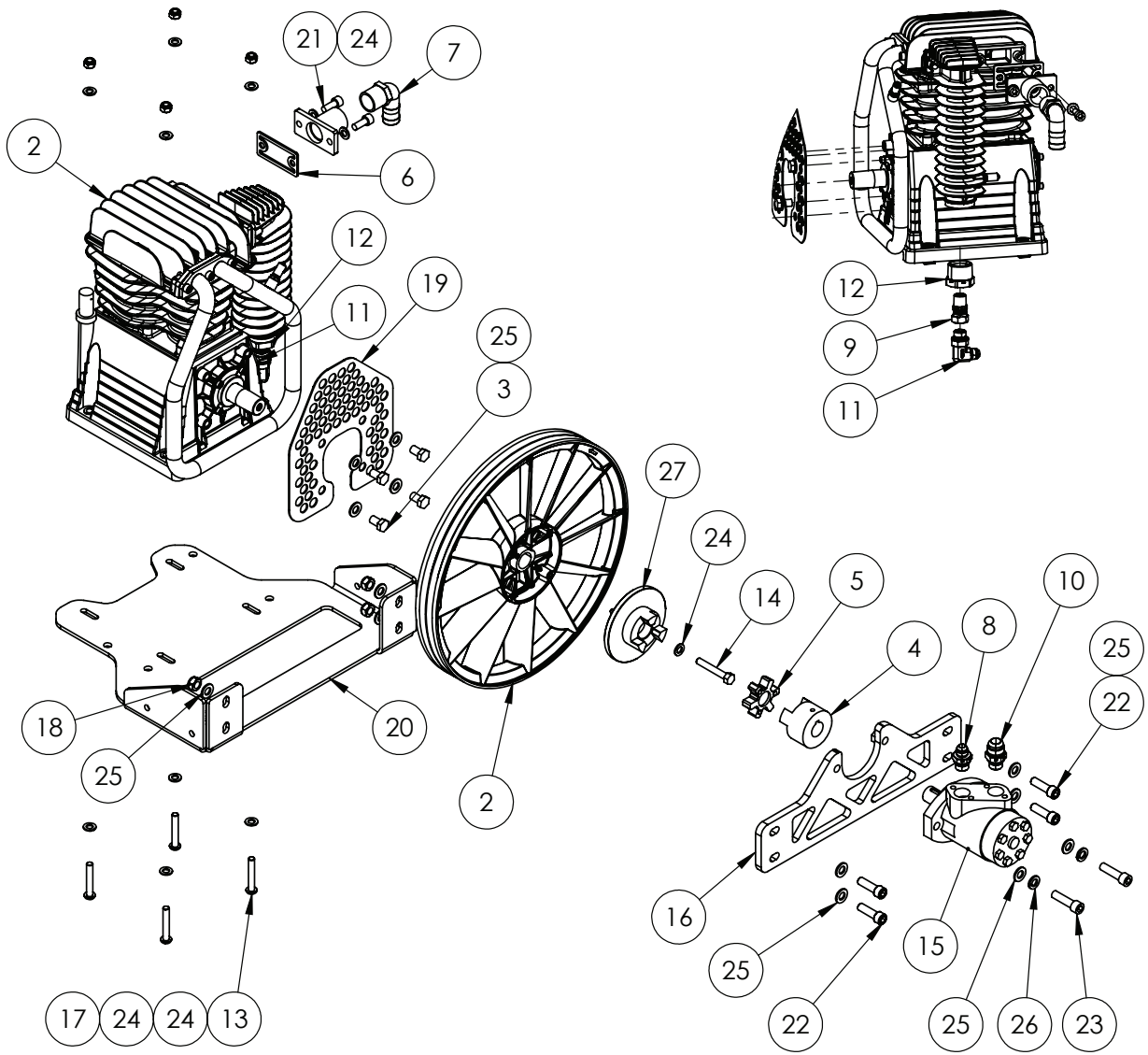

OPTIONAL PARTS			
ITEM	PART NUMBER	DESCRIPTION	QTY
-	GA5074400	SEAL KIT, SUIT, 25CC, GEROTOR, HYDRAULIC MOTOR, MP-SKD	-

IF DESCRIPTION PREFIX IS ASSEMBLY DRAWING ONLY OR PRODUCTION DRAWING ONLY THE ITEM IS NOT FOR SALE			
ITEM	PART NUMBER	DESCRIPTION	QTY
1	GA4603265	AIR COMPRESSOR, REMOTE INTAKE, COMPRESSOR MOUNT, PRAIRIE PRO, 2021	1
2	GA5073855	AIR COMPRESSOR, 653 L/MIN, 174 PSI MAX, ABAC, B5900B	1
3	GA5011227	BOLT M12 X 20 GR8.8 ZP	4
4	GA5073825	COUPLER HALF, JAW, L100, 1" BORE, 1/4" KEY, IRON	1
5	GA5073830	COUPLER SPIDER, L100, NBR RUBBER, BLACK NITRILE	1
6	GA5074080	GASKET, AIR COMPRESSOR REMOTE INTAKE, PRAIRIE PRO S2	1
7	GA5077723	HOSE BARB, ELBOW, 90 DEGREE, 1" MALE X 1" HOSE, BANJO	1
8	GA3500303	HYDRAULIC ADAPTOR NIPPLE, 1/2" BSPP TO 3/4" JIC	1
9	GA3501117	HYDRAULIC ADAPTOR, NIPPLE, 1/2" BSPT SWIVEL FEMALE, 1/2" BSPT MALE, RYCO, S80-0808	1
10	GA3500720	HYDRAULIC ADAPTER, NIPPLE, 1/2" BSPP O-RING MALE X 1 1/16" JIC MALE, S74-0817	1
11	GA3500722	HYDRAULIC ADAPTOR, ELBOW, 90 DEGREE, 3/4" JIC MALE X 1/2" BSPP MALE O-RING, S76-0812	1
12	GA3500205	HYDRAULIC ADAPTOR, REDUCING BUSH, 1 1/4" BSPT MALE X 1/2" BSPT FEMALE, S24-2008	1
13	GA5072300	M10X60MM BHCSS	4
14	GA4551705	MACHINED BOLT, M10 X 65, LEFT HAND THREAD, ZC	1
15	GA3500833	MOTOR, HYDRAULIC, GEROTOR, 25CC, 1" SHAFT WITH KEYWAY	1
16	GA4603240	MOUNT, AIR COMPRESSOR, MOTOR MOUNT, PRAIRIE PRO, 2021	1
17	GA5000141	NUT M10 NYLOC ZP	4
18	GA5012461	NUT M12 NYLOC ZP	4
19	GA4411515	PLATE, AIR COMPRESSOR, REAR FAN GUARD, PRAIRIE PRO, 2021	1
20	GA4410325	PLATE, RH POD, AIR COMPRESSOR MOUNT, PRAIRIE PRO, 2021	1
21	GA5071085	SHCS M10 X 25 GR12.9 ZP	2
22	GA5000321	SHCS M12 X 40 GR12.9 ZP	4
23	GA5000325	SHCS M12 X 45 GR12.9 ZP	2
24	GA5000117	WASHER 10mm FLAT SS HD	11
25	GA5000577	WASHER 12mm FLAT SS HD	14
26	GA5000575	WASHER 12mm SPRING SS	2
27	GA4553234	COUPLING, AIR COMPRESSOR DRIVE, PRAIRIE PRO 2021	1
GA4951105 GOLDACRES		ASSEMBLY DRAWING ONLY, AIR COMPRESSOR, PRAIRIE PRO, 2021	REV 03

CONTINUE OVER PAGE

ABAC, Air Compressor, Service Kits

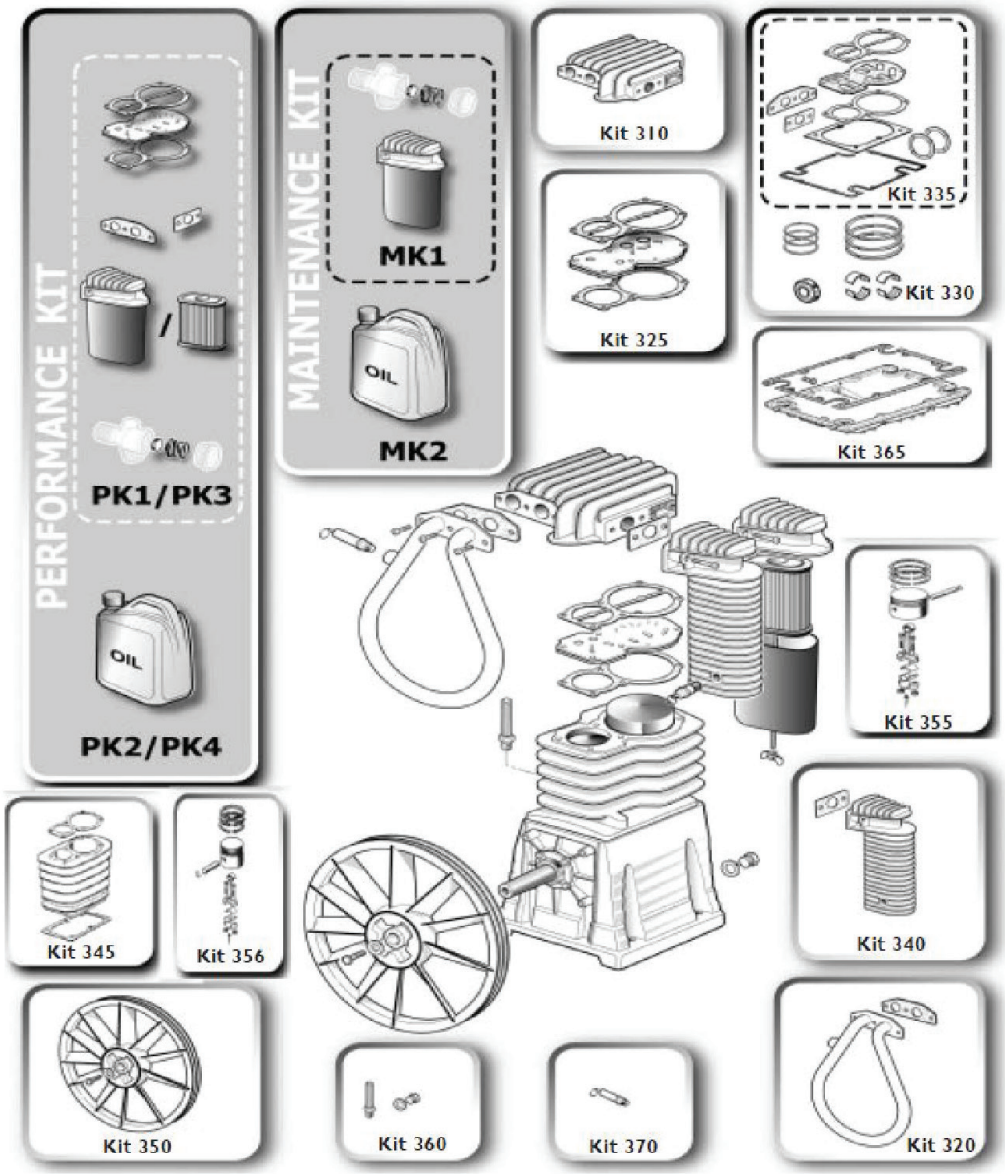

REPLACEMENT PARTS			
ITEM	PART NUMBER	DESCRIPTION	QTY
-	GA5074230	OIL, COMPRESSOR, ACO2000, 1L	-

NOTE: 1.5L REQUIRED FOR FULL SERVICE OF COMPRESSOR

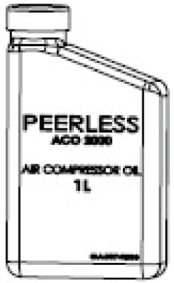

ITEM	PART NUMBER	DESCRIPTION	QTY
310	GA7000024	KIT 310, ABAC, COMPRESSOR, CYLINDER HEAD B5900B, 2901324964	-
320	GA7000025	KIT 320, ABAC, COMPRESSOR, INTERCOOLER, B5900B, 2901324965	-
325	GA7000026	KIT 325, ABAC, COMPRESSOR, VALVE PLATE & GASKET B5900, 2236112801	-
330	GA7000030	KIT 330, ABAC, COMPRESSOR, UPGRADE KIT, B5900B, 6229026900	-
335	GA7000031	KIT 335, ABAC, COMPRESSOR, GASKET SET, B5900B/59B, 8973037264	-
340	GA7000032	KIT 340, ABAC, COMPRESSOR, AFTERCOOLER, B59/60/70/59S, 2901324966	-
345	GA7000033	KIT 345, ABAC, COMPRESSOR, CYLINDER HEAD, B59, 2236112805	-
350	GA7000034	KIT 350, ABAC, COMPRESSOR, FLYWHEEL, 6229028500	-
355	GA7000035	KIT 355, ABAC, COMPRESSOR, CONN, ROD-PISTON LP B5900, 2236112803	-
356	GA7000036	KIT 356, ABAC, COMPRESSOR, CONN, ROD-PISTON HP B5900, 2236112802	-
360	GA7000037	KIT 360, ABAC, COMPRESSOR, OIL LEVEL, B6000, 2901324952	-
365	GA7000038	KIT 365, ABAC, COMPRESSOR, CRANK, COVER BOTTOM B59, 2236112804	-
370	GA7000039	KIT 370, ABAC, COMPRESSOR, SAFETY VALVE B59/70/NS59S, 6229020200	-
MK1	GA7000040	KIT MK1, ABAC, COMPRESSOR, SERVICE, LIGHT, B5900, 8973037869	-
PK3	GA7000041	KIT PK3, ABAC, COMPRESSOR, SERVICE KIT, MAJOR, B5900, 8973037630	-
GA5073855 GOLDACRES		AIR COMPRESSOR, SERVICE KITS	REV 00

LH Pod, Build Options

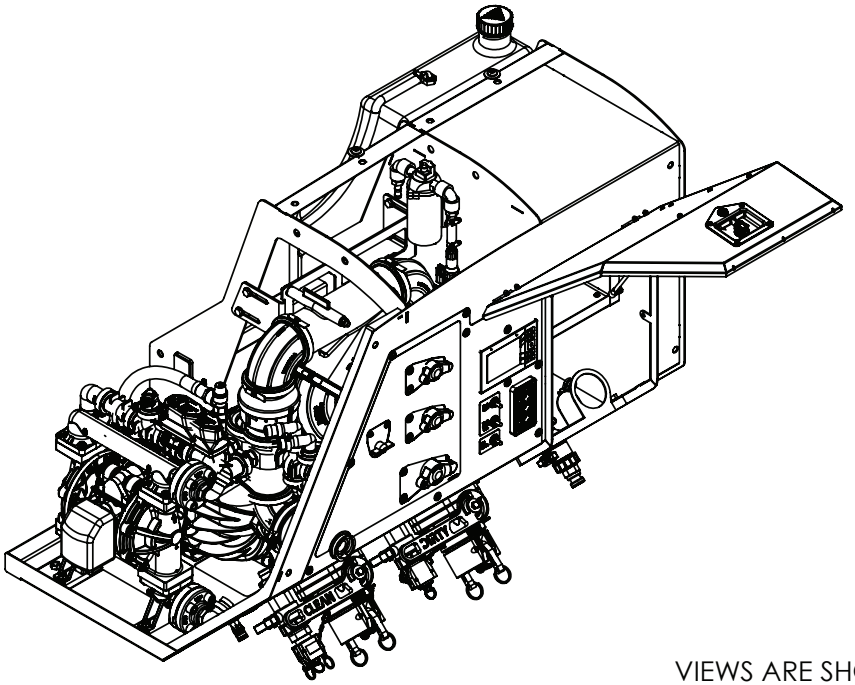

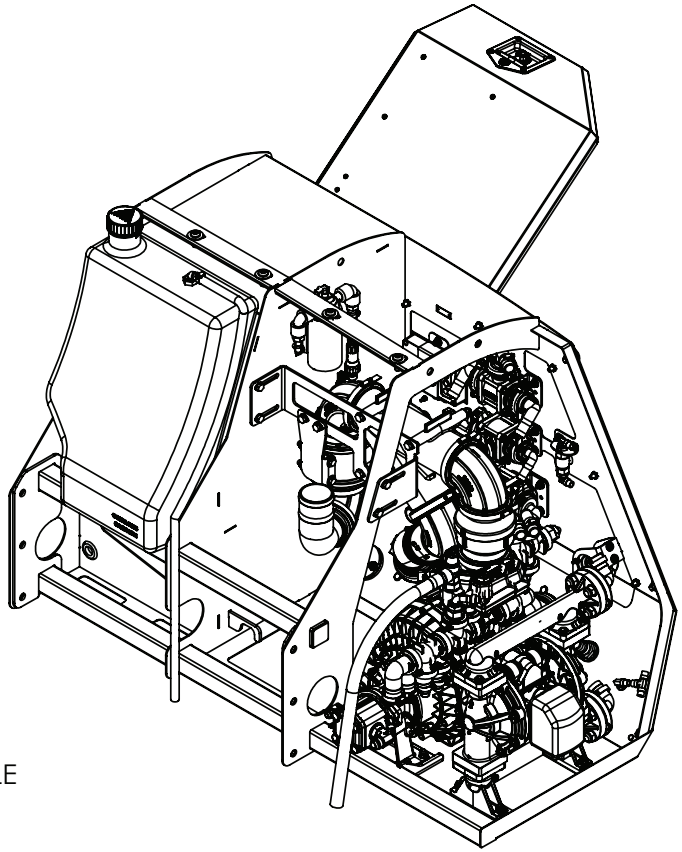

VIEWS ARE SHOWN
WITH ALL OPTIONS VISIBLE

BUILD OPTIONS:
50020 - MICROMATIC RINSE SOCKET AND MICROMATIC COUPLER
55100 - FILL PUMP 3" HIGH FLOW
55110 - PNEUMATIC POWERED CHEMICAL TRANSFER PUMP

GA6100980 GOLDACRES	LH POD ASSEMBLY, PRAIRIE PRO, 2021	REV 02

LH Pod, Fill Station

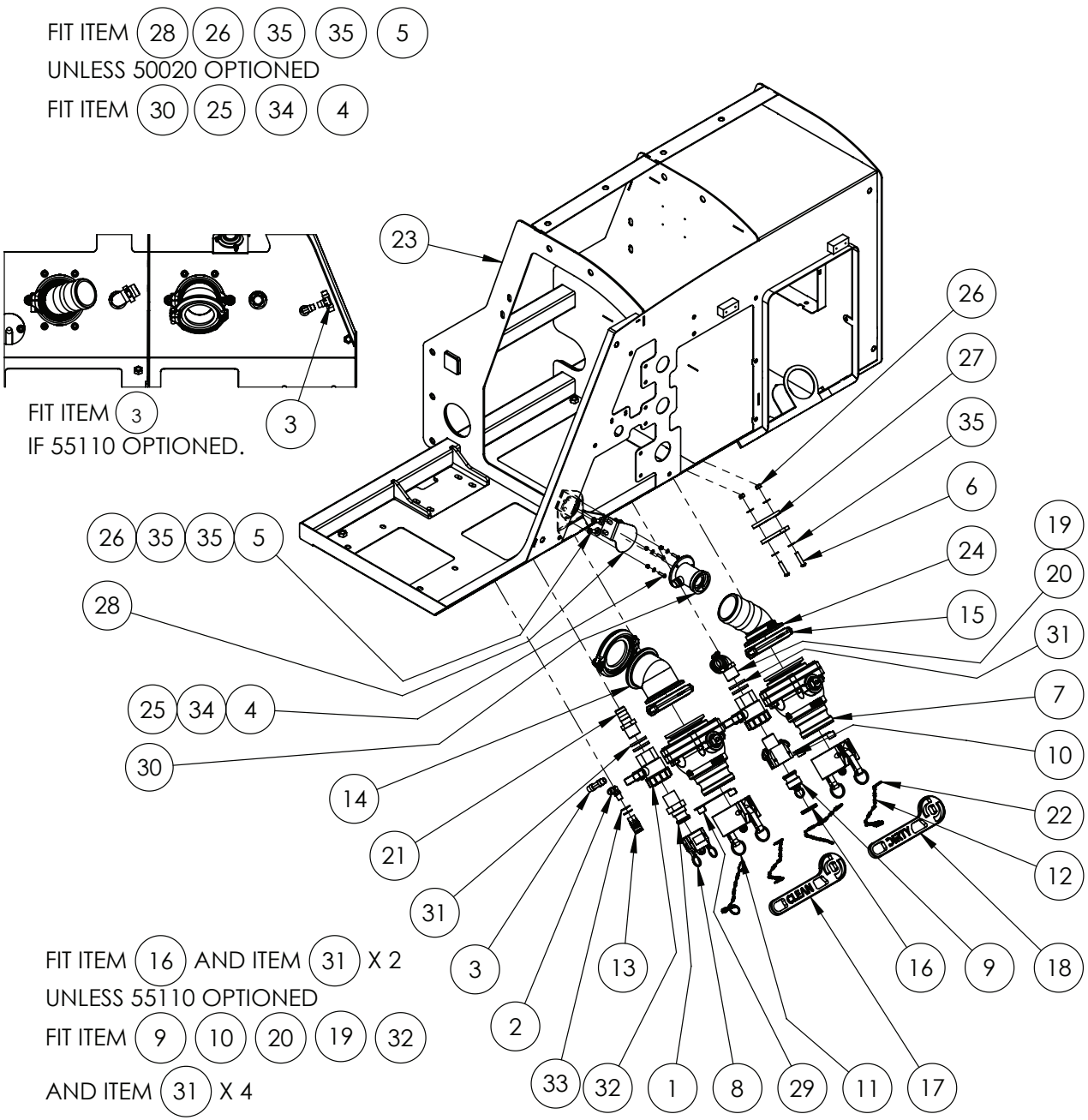

IF DESCRIPTION PREFIX IS ASSEMBLY DRAWING ONLY OR PRODUCTION DRAWING ONLY THE ITEM IS NOT FOR SALE			
ITEM	PART NUMBER	DESCRIPTION	QTY
1	GA5076012	1" MALE ADAPTOR MALE THREAD	1
2	GA5078518	AIR FITTING, ELBOW, SWIVEL, 3/8" TUBE, 1/4" NPT MALE, PUSH IN, BRASS, ALKON - AQ69-DOTS-6X4	1
3	GA5078516	AIR FITTING, TEE, 3/8" TUBE, PUSH IN, BRASS, ALKON - AQ64-DOT-6	1
4	GA0500004	BHCS M5 X 20 SS A2-70	3
5	GA0500102	BHCS M8 X 20 SS A2-70	2
6	GA5051370	BHCS M8 X 35 SS A2-70	2
7	GA2000122	BALL VALVE, 3" FLANGE TO 3" MALE CAMLOCK, MVSF300FP, BANJO	2
8	GA5076004	CAM LEVER, CAP, SUITS 1 AND 1 1/4 MALE, BANJO, 100125CAP	1
9	GA5076005	CAM LEVER, MALE PLUG, SUITS 1 & 1 1/4 COUPLINGS, BANJO	1
10	GA5076007	CAM LEVER, 1 FEMALE COUPLER, 1 MALE THREAD, BANJO	1
11	GA5076719	CAM LEVER, 3" FEMALE CAP, BANJO	2
12	GA5001491	CHAIN 2 X 20 mm SS, 20 LINKS (0.24M)	4
13	GA5076620	Coupling, Air, 1/4" BSPP female x female, Brass, 200	1
14	GA2000070	ELBOW, 45°, 3" FULL PORT FLANGE, BANJO	1
15	GA2000116	FLANGE CLAMP, AND GASKET, 3", SERIES 300, HYPRO	3
16	GA5073250	GROMMET, 38MM HOLE, 44MM OD, BLIND, BLACK	1
17	GA4406155	HANDLE, 3" BALL VALVE, PLUMBING POD, "CLEAN", G6 MY20	1
18	GA4406150	HANDLE, 3" BALL VALVE, PLUMBING POD, "DIRTY", G6 MY20	1
19	GA5002783	HOSE CLAMP, 1 1/4, SS (30-45/13W)	1
20	GA5077720	HOSE BARB, ELBOW, 90 DEGREE, 1 MALE THREAD X 1 1/4 HOSE, BANJO	1
21	GA5077718	HOSE BARB, STRAIGHT, 1 MALE THREAD X 1 HOSE, BANJO	1
22	GA5002077	KEY RING, 25mm, SS	7
23	GA4603100	LH POD FRAME, PRAIRIE PRO, 2021	1
24	GA5077874	MANIFOLD HOSE BARB 3", 45 DEGREE, M300BRB45	1
25	GA5003974	NUT M5 NYLOC ZP	3
26	GA5052590	NUT M8 NYLOC SS	4
27	GA4551670	PAD, TANK DRAIN HANDLE, LH POD, PRAIRIE PRO, 2021	2
28	GA4412675	PLATE, MICROMATIC RINSE BLANKING PLATE, LH POD, PRAIRIE PRO, S2	1
29	GA4412695	PLATE, VALVE STOP, 3", STUBBY, BANJO, MVS300CFFP, HOPPER	2
30	GA5018800	RINSING SOCKET, 3 PIN, MICROMATIC / ENVIRO DRUM COUPLING	1
31	GA4552865	SPACER, RING, 34mm, POD FILL POINT FITTING	4
32	GA5078164	VALVE, BALL, 1 FEMALE THREAD INLET / OUTLET, FULL PORT, LEVER HANDLE, BANJO	2
33	GA5017655	WASHER 1/2 FLAT SS	2
34	GA5003983	WASHER 5mm FLAT SS	3
35	GA5003643	WASHER 8mm FLAT SS HD	8
GA6100980-01 GOLDACRES	LH POD ASSEMBLY, PRAIRIE PRO, 2021		REV 00.A

LH Pod, Fill Pump & Plumbing Assembly Mounting

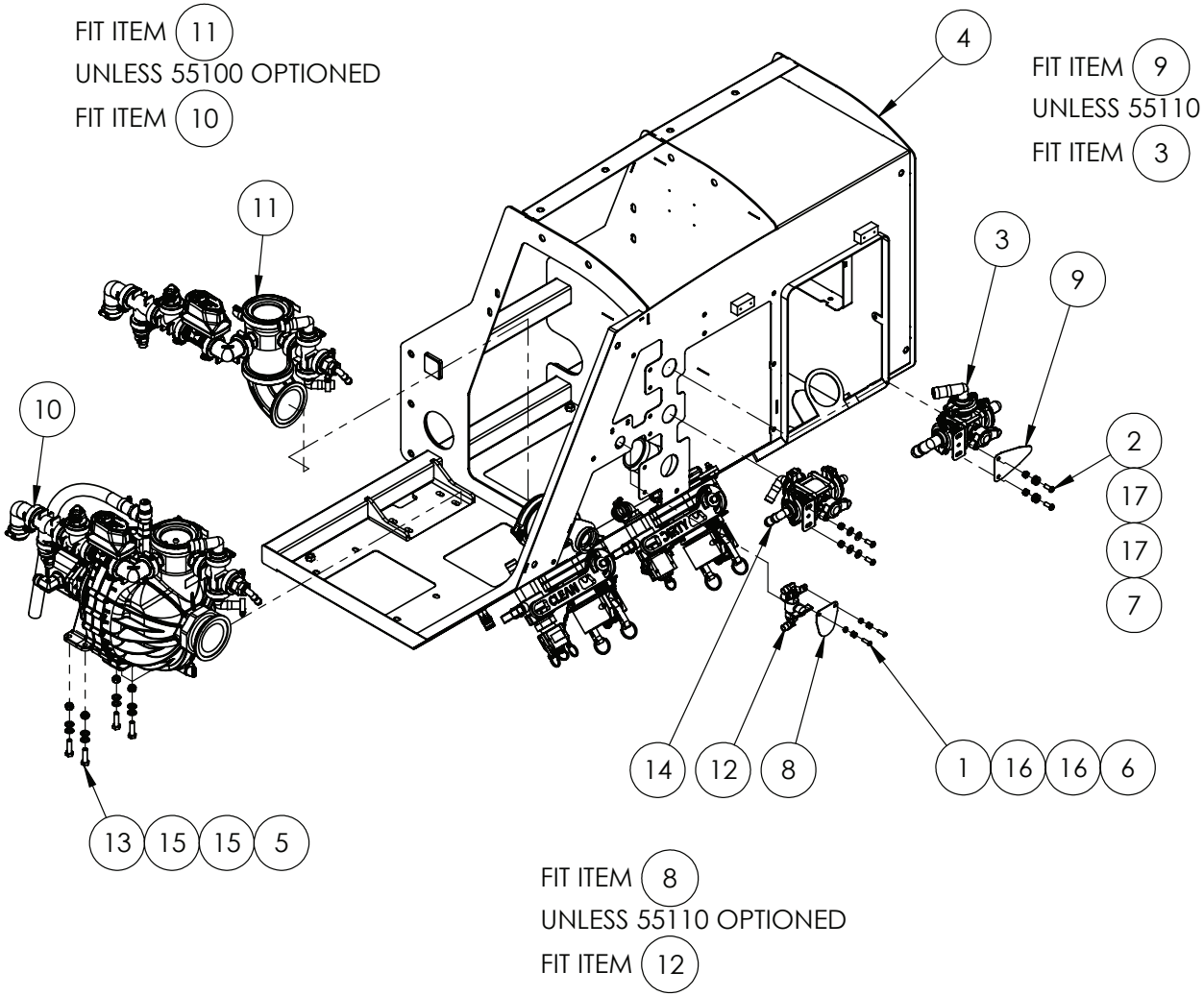

IF DESCRIPTION PREFIX IS ASSEMBLY DRAWING ONLY OR PRODUCTION DRAWING ONLY THE ITEM IS NOT FOR SALE			
ITEM	PART NUMBER	DESCRIPTION	QTY
1	GA5004053	BHCS M6 X 20 SS A2-70	2
2	GA0500102	BHCS M8 X 20 SS A2-70	4
3	GA4951130	CHEMICAL PUMP VALVE ASSEMBLY, LH POD, PRAIRIE PRO, 2021	1
4	GA6100980-01	LH POD ASSEMBLY, PRAIRIE PRO, 2021	1
5	GA5000141	NUT M10 NYLOC ZP	4
6	GA5048115	NUT M6 NYLOC ZP	2
7	GA5052590	NUT M8 NYLOC SS	4
8	GA4410315	PLATE, LH POD, BLANKING PLATE, CHEM PUMP AIR FEED, PRAIRIE PRO, 2021	1
9	GA4410310	PLATE, LH POD, BLANKING PLATE, CHEM PUMP OUTLET VALVE, PRAIRIE PRO, 2021	1
10	GA6101170	PRODUCTION DRAWING ONLY, FILL PUMP, LH POD, PRAIRIE PRO MY21	1
11	GA6101180	PRODUCTION DRAWING ONLY, PLUMBING MANIFOLD, LH POD, PRAIRIE PRO MY21	1
12	GA4949510	PRODUCTION DRAWING ONLY, VALVE, CHEMICAL PUMP AIR FEED, G6 MY20	1
13	GA5006111	SET SCREW M10 X 35 GR8.8 ZP	4
14	GA4951135	TANK RINSE VALVE ASSEMBLY, LH POD, PRAIRIE PRO, 2021	1
15	GA5000117	WASHER 10mm FLAT SS HD	8
16	GA5004437	WASHER 6mm FLAT SS	4
17	GA5003643	WASHER 8mm FLAT SS HD	8
GA6100980-02 GOLDACRES		LH POD ASSEMBLY, PRAIRIE PRO, 2021	REV 01.A

Chemical Pump, Valve Assembly

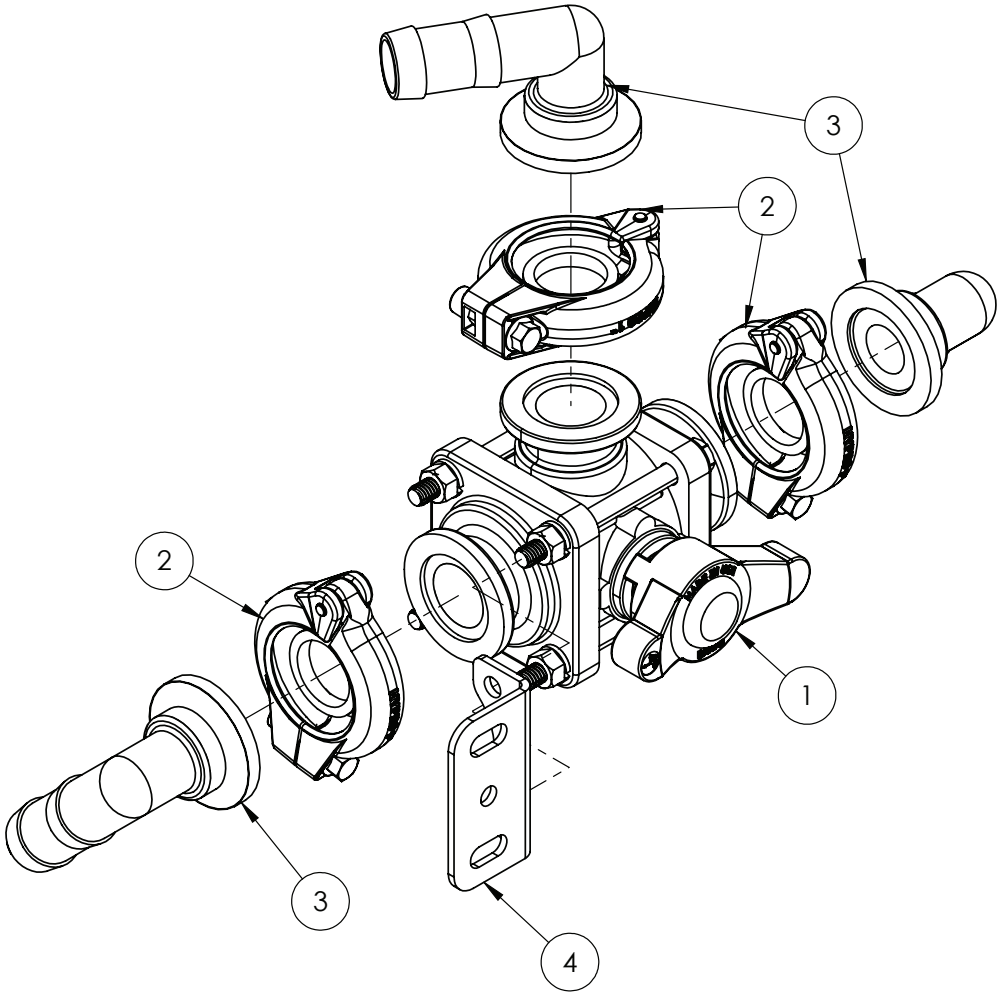

IF DESCRIPTION PREFIX IS ASSEMBLY DRAWING ONLY OR PRODUCTION DRAWING ONLY THE ITEM IS NOT FOR SALE			
ITEM	PART NUMBER	DESCRIPTION	QTY
1	GA5077901	BALL VALVE, 3 WAY, SIDE LOAD, 1" FLANGES, T HANDLE, MV100SL, BANJO	1
2	GA2000113	FLANGE CLAMP, AND GASKET, 1", SERIES 100, HYPRO	3
3	GA5077812	HOSE BARB, ELBOW, 90 DEGREE, 1 FLANGE X 1 HOSE, BANJO	3
4	GA4502210	PLATE - BALL VALVE MOUNTING	1
GA4951130 GOLDACRES		CHEMICAL PUMP VALVE ASSEMBLY, LH POD, PRAIRIE PRO, 2021	REV 00

LH Pod, Plumbing Manifold, Fill

REPLACEMENT PARTS			
ITEM	PART NUMBER	DESCRIPTION	QTY
A	GA2000158	ACTUATOR SUIT BALL VALVE, 1" FLANGE CONNECTION, TX2, KZ VALVE	-
B	GA2000154	BALL VALVE, VALVE ONLY, SUIT GA2000141, KZ VALVE	-

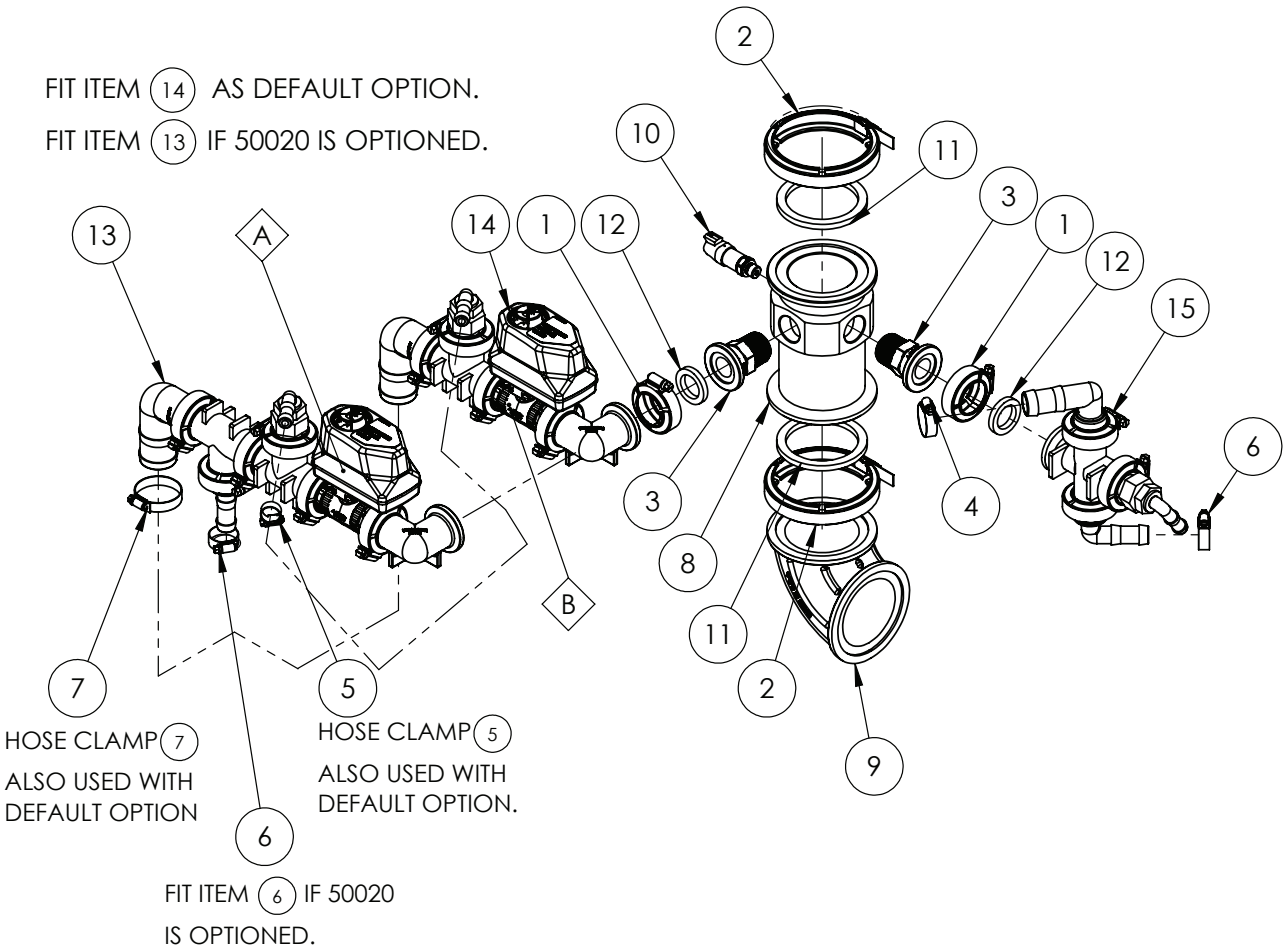

SUB-ASSEMBLIES ON FOLLOWING PAGES

IF DESCRIPTION PREFIX IS ASSEMBLY DRAWING ONLY OR PRODUCTION DRAWING ONLY THE ITEM IS NOT FOR SALE			
ITEM	PART NUMBER	DESCRIPTION	QTY
1	GA5077664	CLAMP, WORM SCREW, 1", BANJO	2
2	FC300	CLAMP, 3" FLANGE MANIFOLD, BANJO	2
3	GA5077820	COUPLING, FLANGED, 1 FLANGE X 1 MALE THREAD, BANJO	2
4	GA5001681	HOSE CLAMP, 1" SS (20-32/12W)	1
5	GA5000469	HOSE CLAMP, 1/2" SS 12-20/9W3	1
6	GA5000999	HOSE CLAMP, 3/4" SS (16-27/12W)	2
7	GA5002873	HOSE CLAMP, 1 1/2" SS (32-50/12W)	1
8	GA4551690	PLUMBING ADAPTOR, M300 FLANGES WITH SIDE PORTS, PRAIRIE PRO, 2021	1
9	GA2000345	PLUMBING FITTING, SWEPT ELBOW, 90, 3", M300 FLANGE, M300SWP90, BANJO	1
10	GA3000316	PRESSURE SENSOR TRANSDUCER, 0-25 BAR, 0.5-4.5V, IFM	1
11	GA5076723	SEAL, EPDM, SUIT 3 FLANGE FITTING, BANJO	2
12	GA5077818	SEAL, SUIT 1 MANIFOLD FITTING, RUBBER EPDM, BANJO, M100G	2
13	GA4951225	SUB ASSEMBLY, LH POD, RINSE TANK FILL MANIFOLD WITH MICROMATIC, PRAIRIE PRO 21	1
14	GA4951295	SUB ASSEMBLY, LH POD, RINSE TANK FILL MANIFOLD WITHOUT MICROMATIC, PRAIRIE PRO 21	1
15	GA4951230	SUB ASSEMBLY, LH POD, TANK RINSE MANIFOLD, PRAIRIE PRO 21	1
GA6101180 GOLDACRES		PRODUCTION DRAWING ONLY, PLUMBING MANIFOLD, LH POD, PRAIRIE PRO MY21	REV 00

LH Pod, 3” Fill Pump, Manifold Assembly

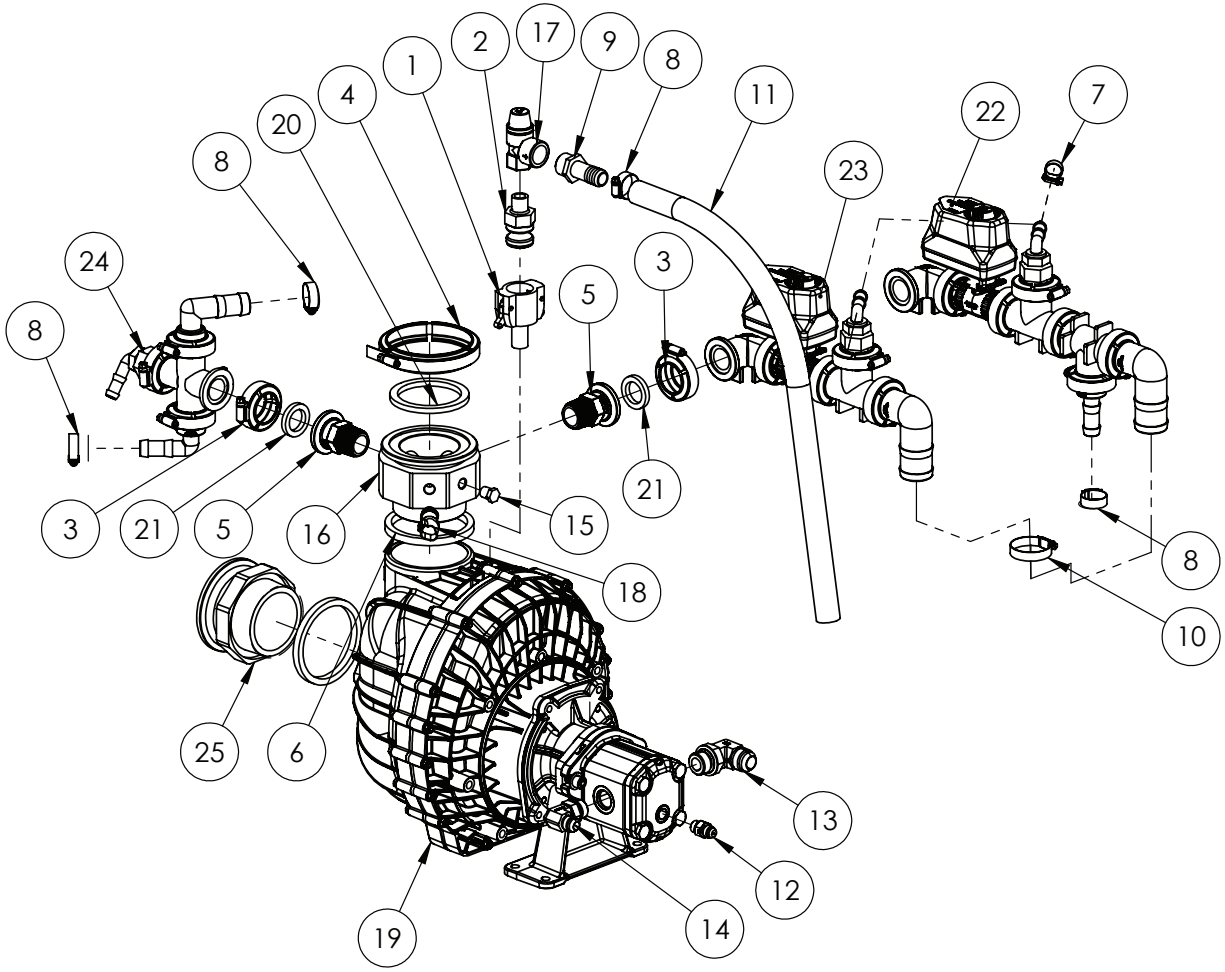

IF DESCRIPTION PREFIX IS ASSEMBLY DRAWING ONLY OR PRODUCTION DRAWING ONLY THE ITEM IS NOT FOR SALE			
ITEM	PART NUMBER	DESCRIPTION	QTY
1	GA5077128	CAM LEVER, 3/4 FEMALE COUPLING X 1/2 MALE THREAD, BANJO, 75B1/2	1
2	GA5075782	CAM LEVER, 3/4 MALE COUPLING X 1/2 MALE THREAD, BANJO, 050F	1
3	GA5077664	CLAMP, WORM SCREW, 1", BANJO	2
4	FC300	CLAMP, 3" FLANGE MANIFOLD, BANJO	1
5	GA5077820	COUPLING, FLANGED, 1 FLANGE X 1 MALE THREAD, BANJO	2
6	GA5078838	EPDM SEAL, 3" NPT THREAD TAPER, PENTAIR FILL PUMP	2
7	GA5000469	HOSE CLAMP, 1/2" SS 12-20/9W3	1
8	GA5000999	HOSE CLAMP, 3/4" SS (16-27/12W)	4
9	GA5077709	HOSE BARB, STRAIGHT, 3/4 MALE THREAD X 3/4 HOSE, BANJO	1
10	GA5002873	HOSE CLAMP, 1 1/2" SS (32-50/12W)	1
11	GA2000216	HOSE, PRESSURE, 20mm, BLACK 250PSI	0.64
12	GA3500146	HYDRAULIC ADAPTOR, 9/16" JICM, 9/16" UNOM, S90-0909, RYCO	1
13	GA3500715	HYDRAULIC ADAPTOR, ELBOW, 1 1/16" UNO TO 1 1/16" JIC, 90 DEG, S91-1717	1
14	GA3500761	HYDRAULIC ADAPTOR, ELBOW, 7/8" UNO TO 3/4" JIC, 90 DEG, S91-1214	1
15	GA5069335	PLUG 1/4" BSPT BRASS	1
16	GA4583595	PLUMBING ADAPTOR, M300 FLANGE TO 3" NPT THREAD WITH SEAL & SIDE PORTS	1
17	GA2000131	PRESSSURE RELIEF VALVE, SPIKE, 4 BAR, 1/2" IN, 3/4" OUT, BRASS, CALEFFI	1
18	GA3000316	PRESSURE SENSOR TRANSDUCER, 0-25 BAR, 0.5-4.5V, IFM	1
19	GA2000146	PUMP, FILL, 3", HYDRAULICALLY DRIVEN, HYPRO	1
20	GA5076723	SEAL, EPDM, SUIT 3 FLANGE FITTING, BANJO	1
21	GA5077818	SEAL, SUIT 1 MANIFOLD FITTING, RUBBER EPDM, BANJO, M100G	2
22	GA4951225	SUB ASSEMBLY, LH POD, RINSE TANK FILL MANIFOLD WITH MICROMATIC, PRAIRIE PRO 21	1
23	GA4951295	SUB ASSEMBLY, LH POD, RINSE TANK FILL MANIFOLD WITHOUT MICROMATIC, PRAIRIE PRO 21	1
24	GA4951230	SUB ASSEMBLY, LH POD, TANK RINSE MANIFOLD, PRAIRIE PRO 21	1
25	GA4583660	PLUMBING ADAPTOR, M300 FLANGE TO 3" NPT THREAD WITH SEAL	1
GA6101170 GOLDACRES		PRODUCTION DRAWING ONLY, FILL PUMP, LH POD, PRAIRIE PRO MY21	REV 02

Rinse Tank Fill Manifold with Micromatic, Option (50020)

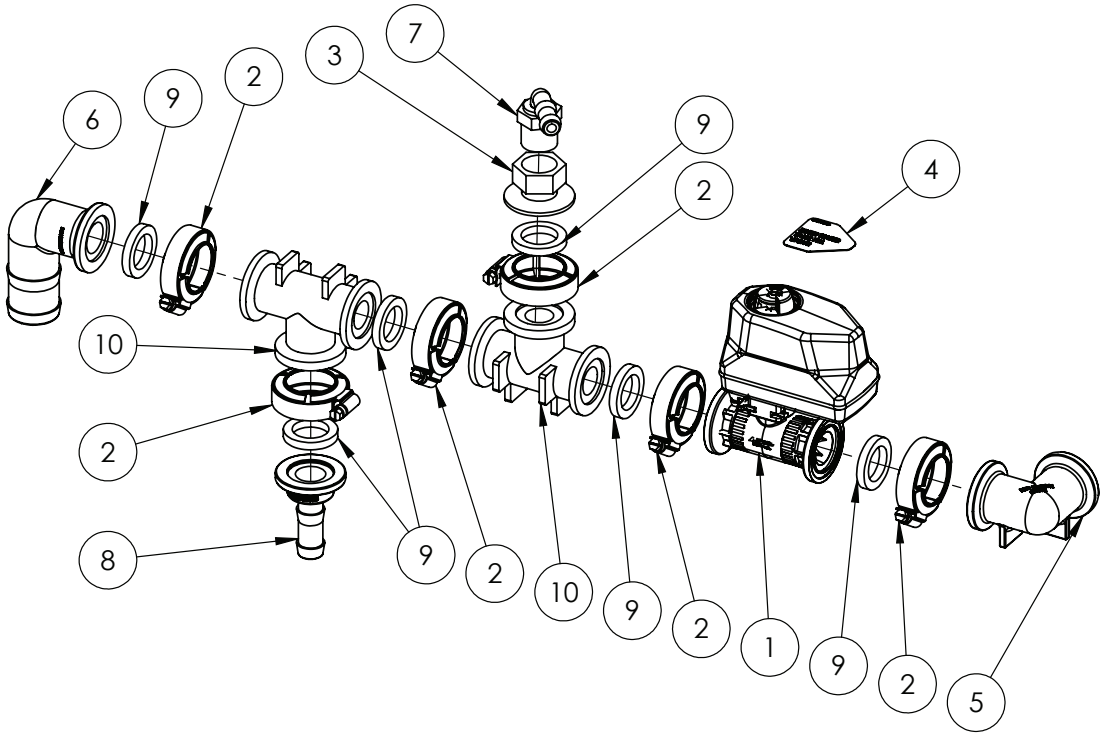

IF DESCRIPTION PREFIX IS ASSEMBLY DRAWING ONLY OR PRODUCTION DRAWING ONLY THE ITEM IS NOT FOR SALE			
ITEM	PART NUMBER	DESCRIPTION	QTY
1	GA2000141	BALL VALVE, MOTORIZED, 2 WAY, 1" FLANGE CONNECTION, 0.5 SECOND, KZ VALVE, TX2	1
2	GA5077664	CLAMP, WORM SCREW, 1", BANJO	6
3	GA5077804	COUPLING, 1" FLANGE X 3/4" FEMALE THREAD, BANJO	1
4	GA8701103	DECAL, RINSE WATER TANK FILL VALVE	1
5	GA5077815	ELBOW, 90 DEGREE, 1" FLANGE X 1" FLANGE, BANJO	1
6	GA2000138	HOSE BARB, ELBOW, 90 DEGREE, 1" FLANGE, X 1 1/2" HOSE, BANGO M100150BRB90	1
7	GA5077710	HOSE BARB, ELBOW, 90 DEGREE, 3/4 MALE THREAD X 1/2 HOSE, BANJO	1
8	GA5077802	HOSE BARB, STRAIGHT, 1" FLANGE X 3/4" HOSE, BANJO, M100075BRB	1
9	GA5077818	SEAL, SUIT 1 MANIFOLD FITTING, RUBBER EPDM, BANJO, M100G	6
10	GA5077823	TEE, 1 FLANGE X 1 FLANGE X 1 FLANGE, BANJO, M100TEE	2
GA4951225 GOLDACRES		SUB ASSEMBLY, LH POD, RINSE TANK FILL MANIFOLD WITH MICROMATIC, PRAIRIE PRO 21	REV 01

Rinse Tank Fill Manifold without Micromatic, (Default)

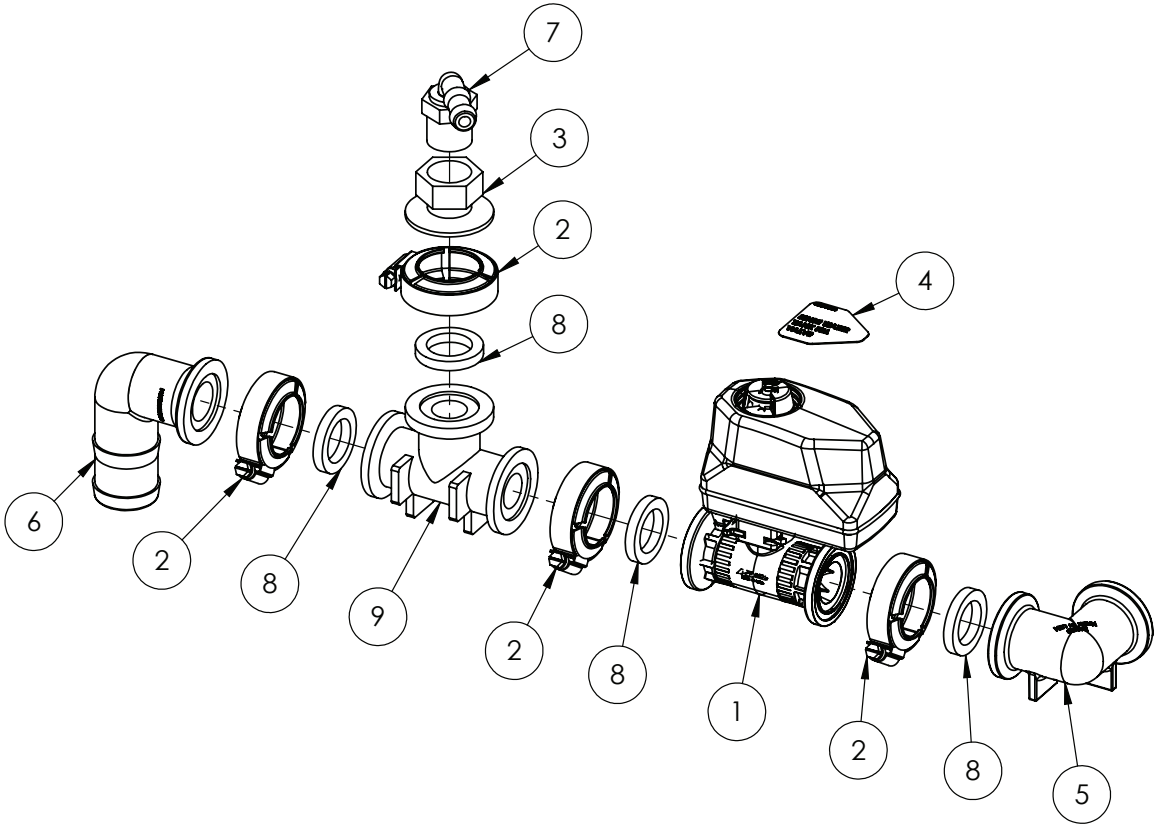

IF DESCRIPTION PREFIX IS ASSEMBLY DRAWING ONLY OR PRODUCTION DRAWING ONLY THE ITEM IS NOT FOR SALE			
ITEM	PART NUMBER	DESCRIPTION	QTY
1	GA2000141	BALL VALVE, MOTORIZED, 2 WAY, 1" FLANGE CONNECTION, 0.5 SECOND, KZ VALVE, TX2	1
2	GA5077664	CLAMP, WORM SCREW, 1", BANJO	4
3	GA5077804	COUPLING, 1" FLANGE X 3/4" FEMALE THREAD, BANJO	1
4	GA8701103	DECAL, RINSE WATER TANK FILL VALVE	1
5	GA5077815	ELBOW, 90 DEGREE, 1" FLANGE X 1" FLANGE, BANJO	1
6	GA2000138	HOSE BARB, ELBOW, 90 DEGREE, 1" FLANGE, X 1 1/2" HOSE, BANGO M100150BRB90	1
7	GA5077710	HOSE BARB, ELBOW, 90 DEGREE, 3/4 MALE THREAD X 1/2 HOSE, BANJO	1
8	GA5077818	SEAL, SUIT 1 MANIFOLD FITTING, RUBBER EPDM, BANJO, M100G	4
9	GA5077823	TEE, 1 FLANGE X 1 FLANGE X 1 FLANGE, BANJO, M100TEE	1
GA4951295 GOLDACRES	SUB ASSEMBLY, LH POD, RINSE TANK FILL MANIFOLD WITHOUT MICROMATIC, PRAIRIE PRO 21		REV 00

Air Feed Valve, Chemical Pump

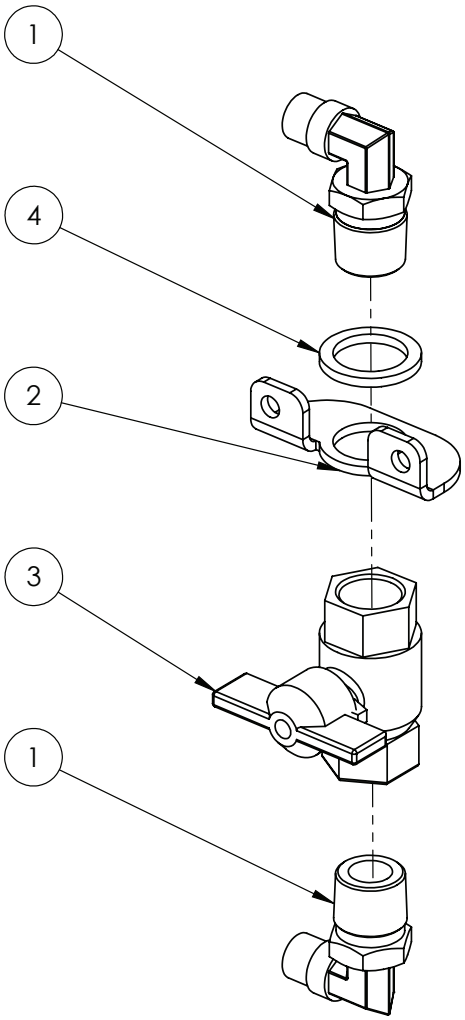

IF DESCRIPTION PREFIX IS ASSEMBLY DRAWING ONLY OR PRODUCTION DRAWING ONLY THE ITEM IS NOT FOR SALE			
ITEM	PART NUMBER	DESCRIPTION	QTY
1	GA5078524	AIR FITTING, ELBOW, SWIVEL, 3/8" TUBE, 1/2" NPT MALE, PUSH IN, BRASS, ALKON - AQ69-DOTS-6X8	2
2	GA4406205	PLATE, BRASS 1/2" BALL VALVE MOUNT BRACKET	1
3	GA5018307	VALVE, BALL, 12mm, 1/2" FEMALE, BUTTERFLY HANDLE, BRASS	1
4	GA4407545	WASHER, SPACER, OD 30, ID 22, 3mm THICK, SS	1
GA4949510 GOLDACRES		PRODUCTION DRAWING ONLY, VALVE, CHEMICAL PUMP AIR FEED, G6 MY20	REV 00

Tank Rinse Manifold

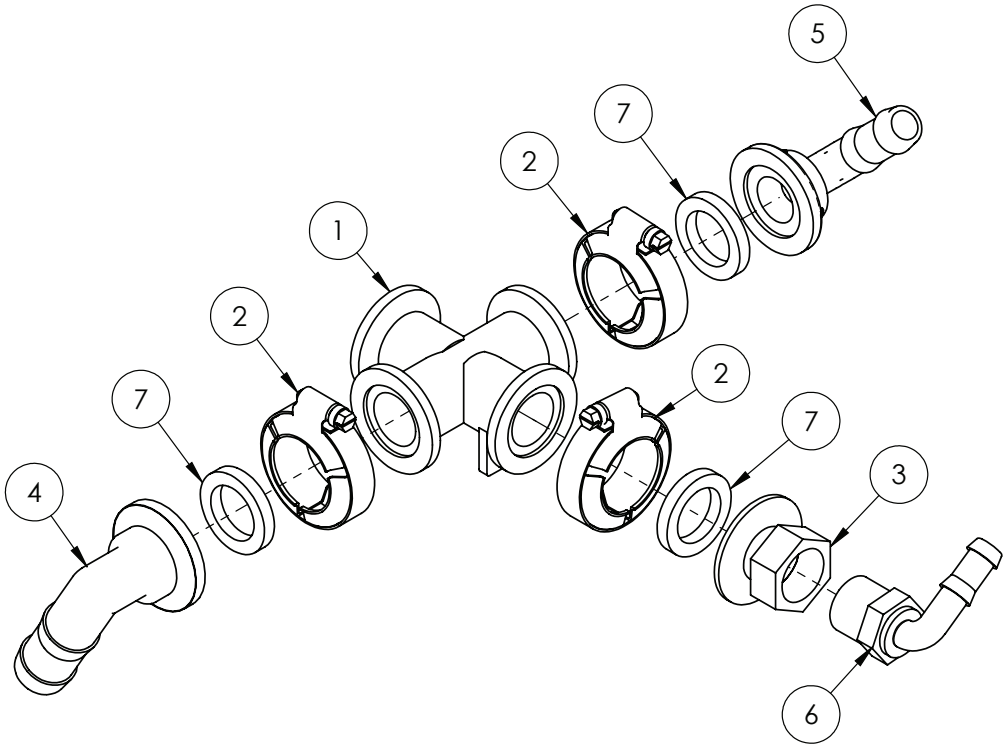

IF DESCRIPTION PREFIX IS ASSEMBLY DRAWING ONLY OR PRODUCTION DRAWING ONLY THE ITEM IS NOT FOR SALE			
ITEM	PART NUMBER	DESCRIPTION	QTY
1	GA5077816	1" FLANGED CROSS	1
2	GA5077664	CLAMP, WORM SCREW, 1", BANJO	3
3	GA5077804	COUPLING, 1" FLANGE X 3/4" FEMALE THREAD, BANJO	1
4	GA5077812	HOSE BARB, ELBOW, 90 DEGREE, 1 FLANGE X 1 HOSE, BANJO	1
5	GA5077803	HOSE BARB, ELBOW, 90 DEGREE, 1 FLANGE X 3/4 HOSE, BANJO, M100075BRB90	1
6	GA5077710	HOSE BARB, ELBOW, 90 DEGREE, 3/4 MALE THREAD X 1/2 HOSE, BANJO	1
7	GA5077818	SEAL, SUIT 1 MANIFOLD FITTING, RUBBER EPDM, BANJO, M100G	3
GA4951230 GOLDACRES		SUB ASSEMBLY, LH POD, TANK RINSE MANIFOLD, PRAIRIE PRO 21	REV 00

Valve Assembly, Tank Rinse

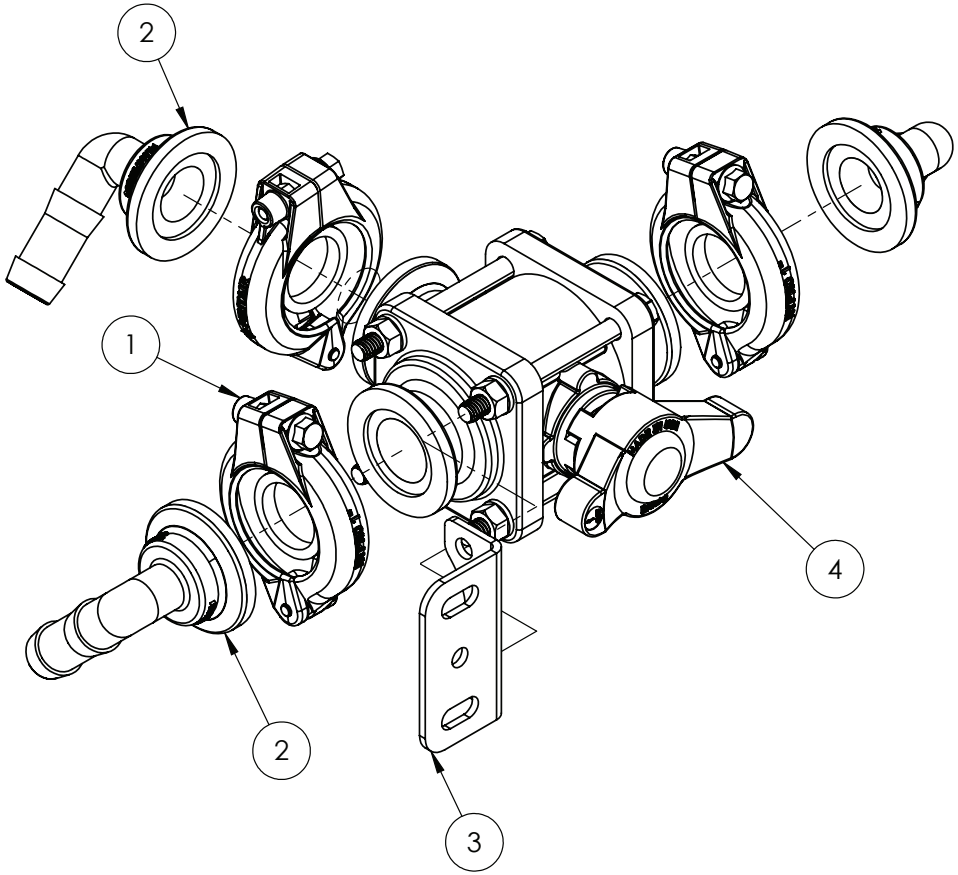

IF DESCRIPTION PREFIX IS ASSEMBLY DRAWING ONLY OR PRODUCTION DRAWING ONLY THE ITEM IS NOT FOR SALE			
ITEM	PART NUMBER	DESCRIPTION	QTY
1	GA2000113	FLANGE CLAMP, AND GASKET, 1", SERIES 100, HYPRO	3
2	GA5077803	HOSE BARB, ELBOW, 90 DEGREE, 1 FLANGE X 3/4 HOSE, BANJO, M100075BRB90	3
3	GA4502210	PLATE - BALL VALVE MOUNTING	1
4	GA5077899	VALVE, BALL, 3 WAY, 1 FLANGE INLETS / OUTLETS, BANJO, MV100BL	1
GA4951135 GOLDACRES		TANK RINSE VALVE ASSEMBLY, LH POD, PRAIRIE PRO, 2021	REV 01

LH Pod, Wash Down Pump & Main Fill Manifold Mounting

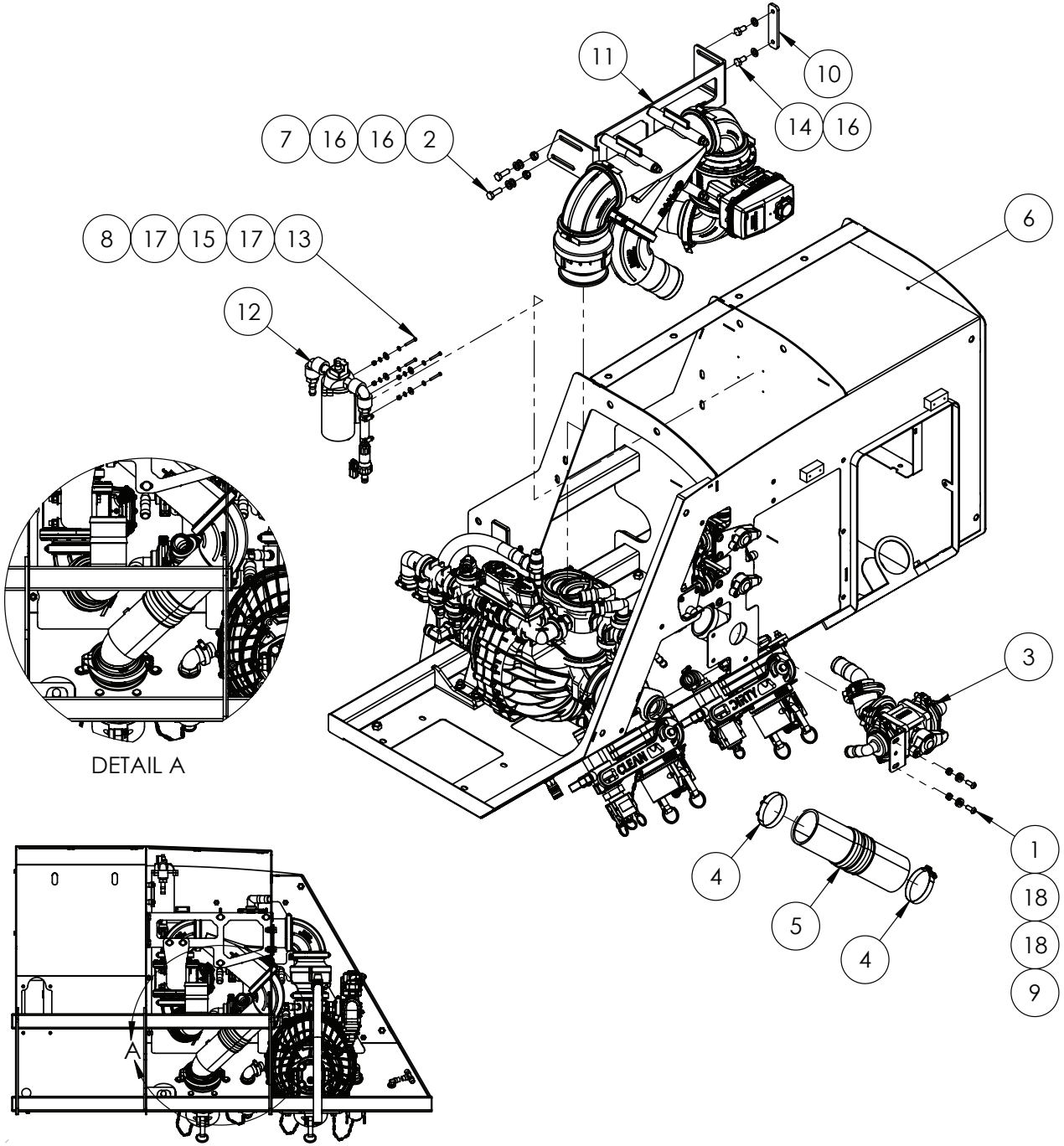

IF DESCRIPTION PREFIX IS ASSEMBLY DRAWING ONLY OR PRODUCTION DRAWING ONLY THE ITEM IS NOT FOR SALE			
ITEM	PART NUMBER	DESCRIPTION	QTY
1	GA0500102	BHCS M8 X 20 SS A2-70	2
2	GA5065455	BOLT M10 X 30 GR8.8 ZP	2
3	GA4951140	HOPPER BYPASS VALVE ASSEMBLY, LH POD, PRAIRIE PRO, 2021	1
4	GA5010195	HOSE CLAMP, 3", T BOLT, 3.25" TO 3.56", LIGHT DUTY, DONALDSON	2
5	GA5074060	HOSE, 3" SILICON, CUT 290mm, DIRTY FILL, LH POD, PRAIRIE PRO, 2021	1
6	GA6100980-02	LH POD ASSEMBLY, PRAIRIE PRO, 2021	1
7	GA5000141	NUT M10 NYLOC ZP	2
8	GA5003501	NUT M4 NYLOC ZP	4
9	GA5052590	NUT M8 NYLOC SS	2
10	GA4410300	PLATE, LH POD, PLUMBING MANIFOLD BRACKET 3, PRAIRIE PRO, 2021	1
11	GA4951220	PRODUCTION DRAWING ONLY, MAIN FILL MANIFOLD, LH POD, PRAIRIE PRO MY21	1
12	GA4949515	PUMP ASSEMBLY, WASH DOWN GUN, G6 MY20	1
13	GA5011367	SHCS M4 X 30 GR12.9 ZP	4
14	GA5006113	SET SCREW M10 X 20 GR8.8 ZP	2
15	GA5017643	WASHER 1/4 ID X 5/8 OD X 18G FLAT SS	4
16	GA5000117	WASHER 10mm FLAT SS HD	6
17	GA5020510	WASHER 4mm FLAT SS	8
18	GA5003643	WASHER 8mm FLAT SS HD	4
GA6100980-03 GOLDACRES	LH POD ASSEMBLY, PRAIRIE PRO, 2021		REV 01.A

Valve Assembly, Hopper Bypass

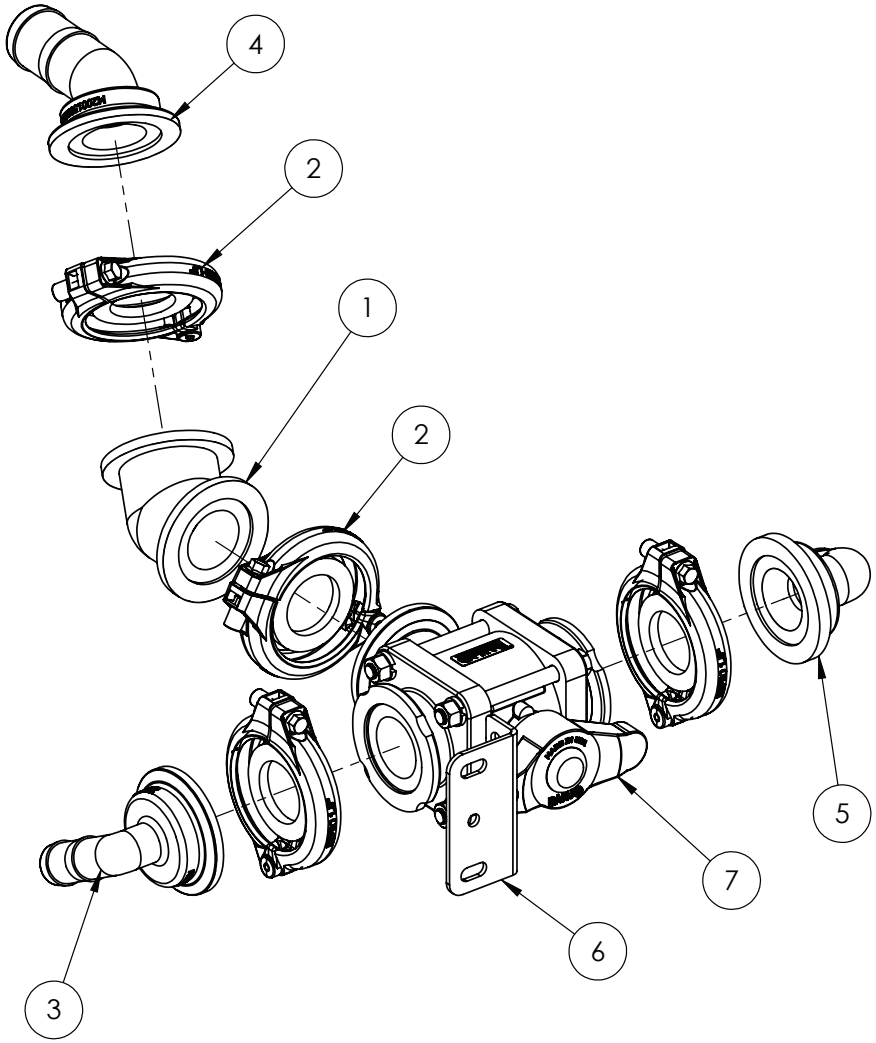

IF DESCRIPTION PREFIX IS ASSEMBLY DRAWING ONLY OR PRODUCTION DRAWING ONLY THE ITEM IS NOT FOR SALE			
ITEM	PART NUMBER	DESCRIPTION	QTY
1	GA5077841	2" MANIFOLD COUPLING-45 DEGREE	1
2	GA2000114	FLANGE CLAMP, AND GASKET, 1.5", SERIES 200, HYPRO	4
3	GA5077827	HOSE BARB, ELBOW, 90 DEGREE, 2" PORT FLANGE X 1" HOSE, BANJO	1
4	GA5074065	HOSE BARB, ELBOW, 45 DEGREE, 2 FLANGE X 1 1/2 HOSE, BANJO, M200150BRB45	1
5	GA5077831	HOSE BARB, ELBOW, 90 DEGREE, 2" FLANGE X 1 1/4" HOSE, BANJO	1
6	GA4410305	PLATE, LH POD, HOPPER BALL VALVE BRACKET, PRAIRIE PRO, 2021	1
7	GA5077902	VALVE, BALL, 3 WAY, 2 FLANGE INLETS / OUTLETS, BANJO, MV200BL	1
GA4951140 GOLDACRES		HOPPER BYPASS VALVE ASSEMBLY, LH POD, PRAIRIE PRO, 2021	REV 02

LH Pod, Manual Fill Manifold

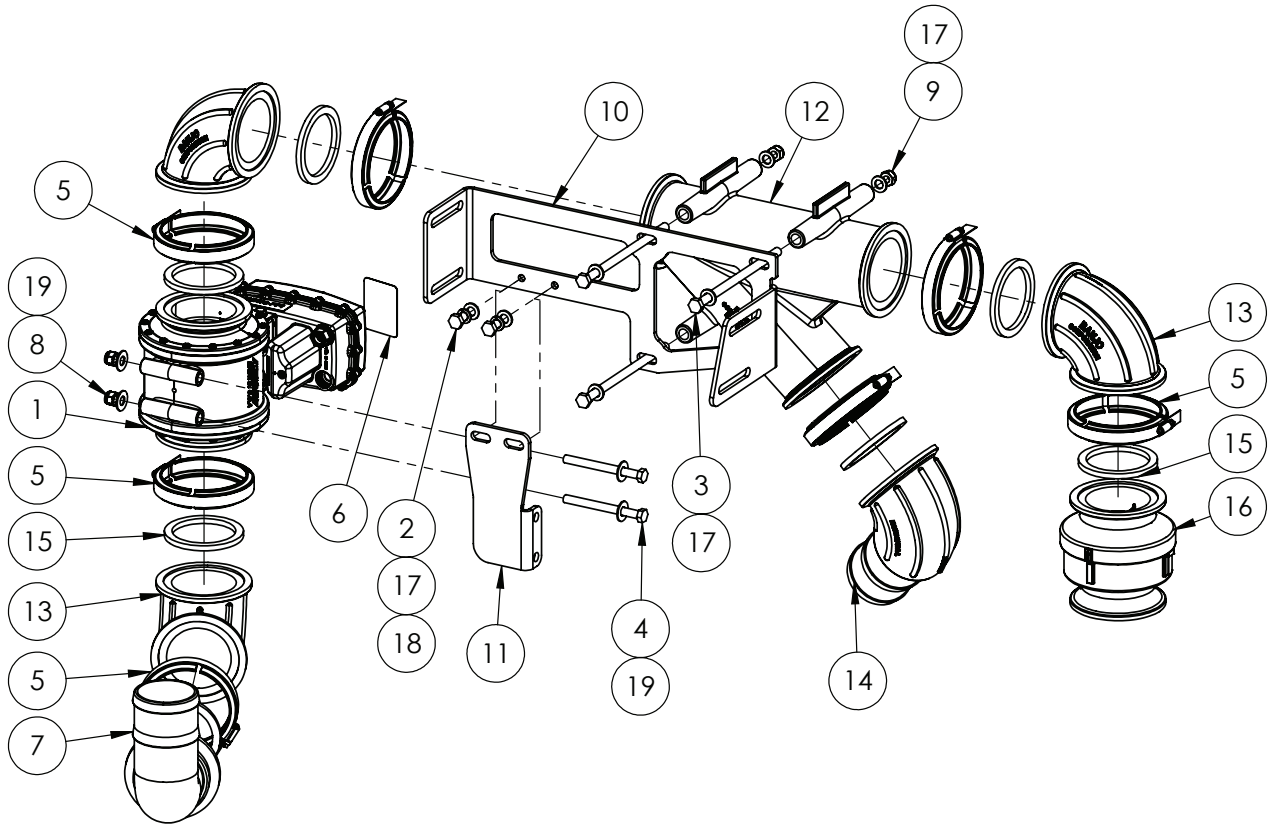

IF DESCRIPTION PREFIX IS ASSEMBLY DRAWING ONLY OR PRODUCTION DRAWING ONLY THE ITEM IS NOT FOR SALE			
ITEM	PART NUMBER	DESCRIPTION	QTY
1	GA2000144	BALL VALVE, MOTORISED, 2 WAY, 3" FLANGED CONNECTIONS, 3 SECOND, PWM, KZ VALVE	1
2	GA5006143	BOLT M10 X 16 GR8.8 ZP	2
3	GA0500091	BOLT M10 X 190 GR8.8 ZP	3
4	GA0500039	BOLT, 3/8" X 4" UNC ZP, GR8	2
5	FC300	CLAMP, 3" FLANGE MANIFOLD, BANJO	7
6	GA8701606	DECAL, PRODUCT TANK FILL VALVE	1
7	GA5077875	HOSE BARB, ELBOW, 90 DEGREE, 3 FLANGE X 3 HOSE, BANJO, M300BRB90	1
8	GA5048345	NUT 3/8", NYLOC, ZP, UNC	2
9	GA5000141	NUT M10 NYLOC ZP	3
10	GA4410290	PLATE, LH POD, PLUMBING MANIFOLD BRACKET 1, PRAIRIE PRO, 2021	1
11	GA4410295	PLATE, LH POD, PLUMBING MANIFOLD BRACKET 2, PRAIRIE PRO, 2021	1
12	GA2000147	PLUMBING ADAPTOR, 3" M300 STRAIGHT WITH 45 SIDE INLET Y, M300Y45	1
13	GA2000345	PLUMBING FITTING, SWEPT ELBOW, 90, 3", M300 FLANGE, M300SWP90, BANJO	3
14	GA2000148	PLUMBING FITTING, 3" FLANGE TO 3" BARB, SWEPT ELBOW, BANJO, M300BRBSWP90	1
15	GA5076723	SEAL, EPDM, SUIT 3 FLANGE FITTING, BANJO	7
16	GA2000088	VALVE, CHECK, 3"MANIFOLD, FULL PORT, FLANGE, BANJO	1
17	GA5000117	WASHER 10mm FLAT SS HD	8
18	GA5000137	WASHER 10mm SPRING SS	2
19	GA5017623	WASHER 3/8 FLAT ZP HD	4
GA4951220 GOLDACRES	PRODUCTION DRAWING ONLY, MAIN FILL MANIFOLD, LH POD, PRAIRIE PRO MY21		REV 00

LH Pod, Wash Down Gun Pump

REPLACEMENT PARTS			
ITEM	PART NUMBER	DESCRIPTION	QTY
A	GA5071565	PRESSURE SWITCH, 45 PSI, SUIT 2088 SERIES SHURFLO 11.3LT PUMP	1

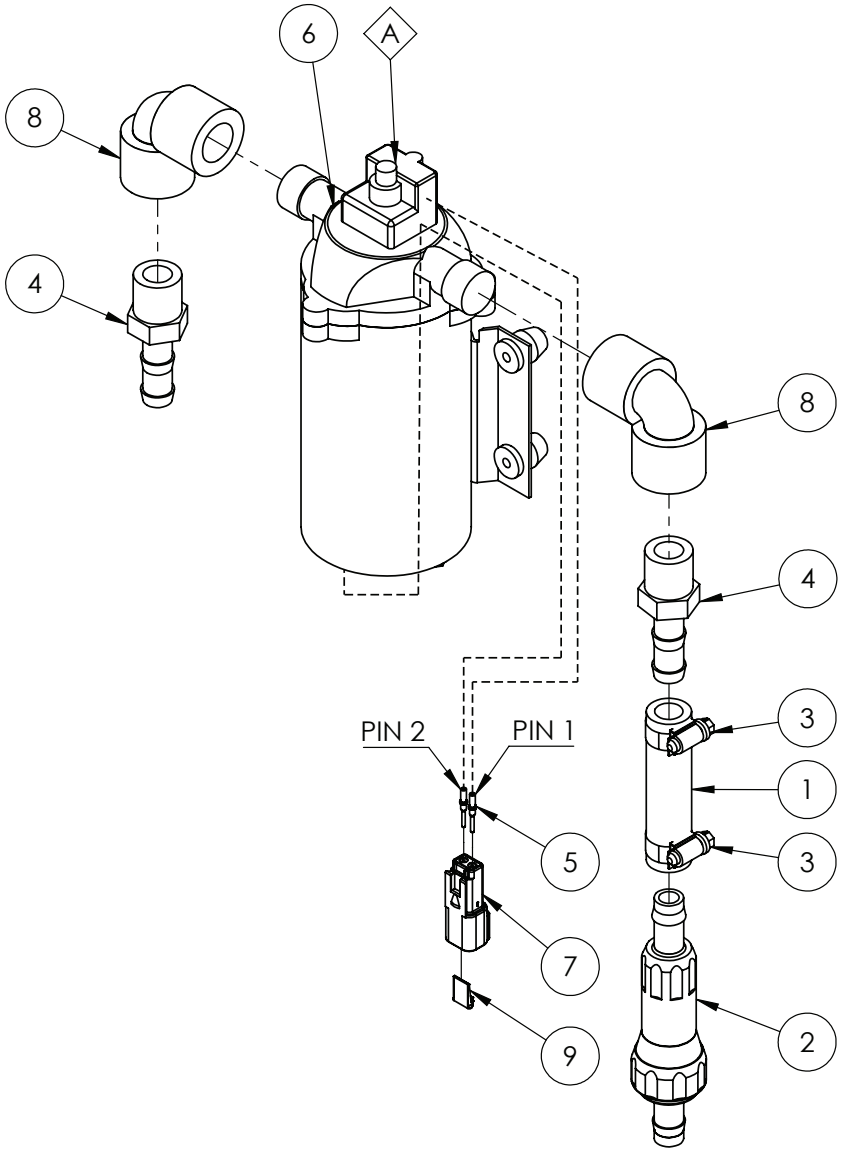

IF DESCRIPTION PREFIX IS ASSEMBLY DRAWING ONLY OR PRODUCTION DRAWING ONLY THE ITEM IS NOT FOR SALE			
ITEM	PART NUMBER	DESCRIPTION	QTY
1	GA2000286	12mm PRESSURE HOSE CUT 80mm, GA2000211	1
2	GA5008745	FILTER, INLINE, 1/2" HOSE BARBS	1
3	GA5000469	HOSE CLAMP, 1/2" SS 12-20/9W3	2
4	GA5077702	HOSE BARB, STRAIGHT, 1/2 MALE THREAD X 1/2 HOSE, BANJO, HB050	2
5	GA5061240	PIN, MALE, SOLID, NICKEL, NUMBER 16, GREEN BAND, AWG 14, DEUTSCH, 0460-215-16141	2
6	GA5023405	PUMP, 12 VOLT , 11.3LT/MIN MAX 45 PSI, SHURFLO	1
7	GA5052830	RECEPTACLE, 2 WAY, PINS, DT SERIES, DEUTSCH, DT04-2P	1
8	GA5077652	STREET ELBOW, 90 DEGREE, 1/2" FEMALE THREAD, BANJO	2
9	GA5052835	WEDGE LOCK, 2 WAY, DT SERIES, DEUTSCH	1
GA4949515 GOLDACRES		PUMP ASSEMBLY, WASH DOWN GUN, G6 MY20	REV 00

LH Pod, Tool Box Door Assembly, PLC & Chemical Pump Mounting

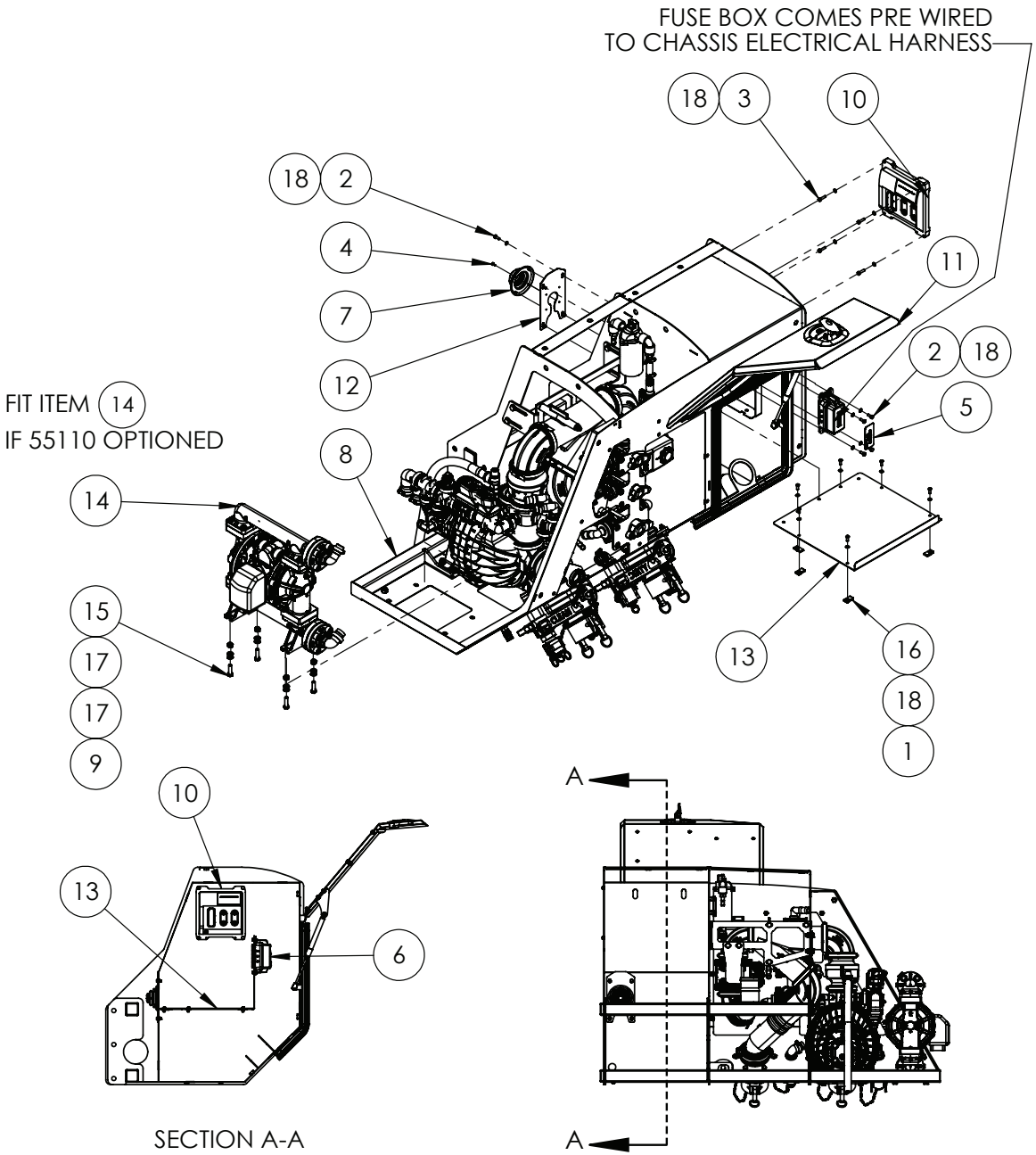

IF DESCRIPTION PREFIX IS ASSEMBLY DRAWING ONLY OR PRODUCTION DRAWING ONLY THE ITEM IS NOT FOR SALE			
ITEM	PART NUMBER	DESCRIPTION	QTY
1	GA5004047	BHCS M6 X 16 GR12.9 ZP	6
2	GA5004041	BOLT M6 X 16 GR8.8 ZP	8
3	GA5004073	BOLT M6 X 25 GR8.8 ZP	4
4	GA5011360	BOLT PAN HEAD M4 X 10 SS	4
5	GA8701498	DECAL, CHASSIS FUSE BLOCK	1
6	GA3000287	FUSE BOX, MINI FUSE, 60 TERMINAL, BLANK, IP68, LITTELFUSE, PDM71003ZXM	1
7	GA5069725	GROMET SLOP STOP BLA 105 X 60	1
8	GA6100980-03	LH POD ASSEMBLY, PRAIRIE PRO, 2021	1
9	GA5000141	NUT M10 NYLOC ZP	4
10	GA3000499	PLC, PRAIRIE PRO MACHINE CONTROLLER MY21, CR710S, IFM	1
11	GA4909454	PRODUCTION DRAWING ONLY, PRAIRIE PRO MY20, LH POD, TOOLBOX DOOR	1
12	GA4410281	PLATE, LH POD, TOOL BOX, REAR COVER, ON HARNESS PRAIRIE PRO, 2021	1
13	GA4411765	PLATE, TOOL BOX SHELF, LH POD, PRAIRIE PRO, SERIES 2	1
14	GA4909225	PRODUCTION DRAWING ONLY, CHEMICAL PUMP, GRACO HUSKY, PRARIE PRO, MY21	1
15	GA5006111	SET SCREW M10 X 35 GR8.8 ZP	4
16	GA5066830	SPEED CLIP M6	6
17	GA5000117	WASHER 10mm FLAT SS HD	8
18	GA5004437	WASHER 6mm FLAT SS	18
GA6100980-04 GOLDACRES		LH POD ASSEMBLY, PRAIRIE PRO, 2021	REV 03.A

Tool Box Door & Strut Mounting

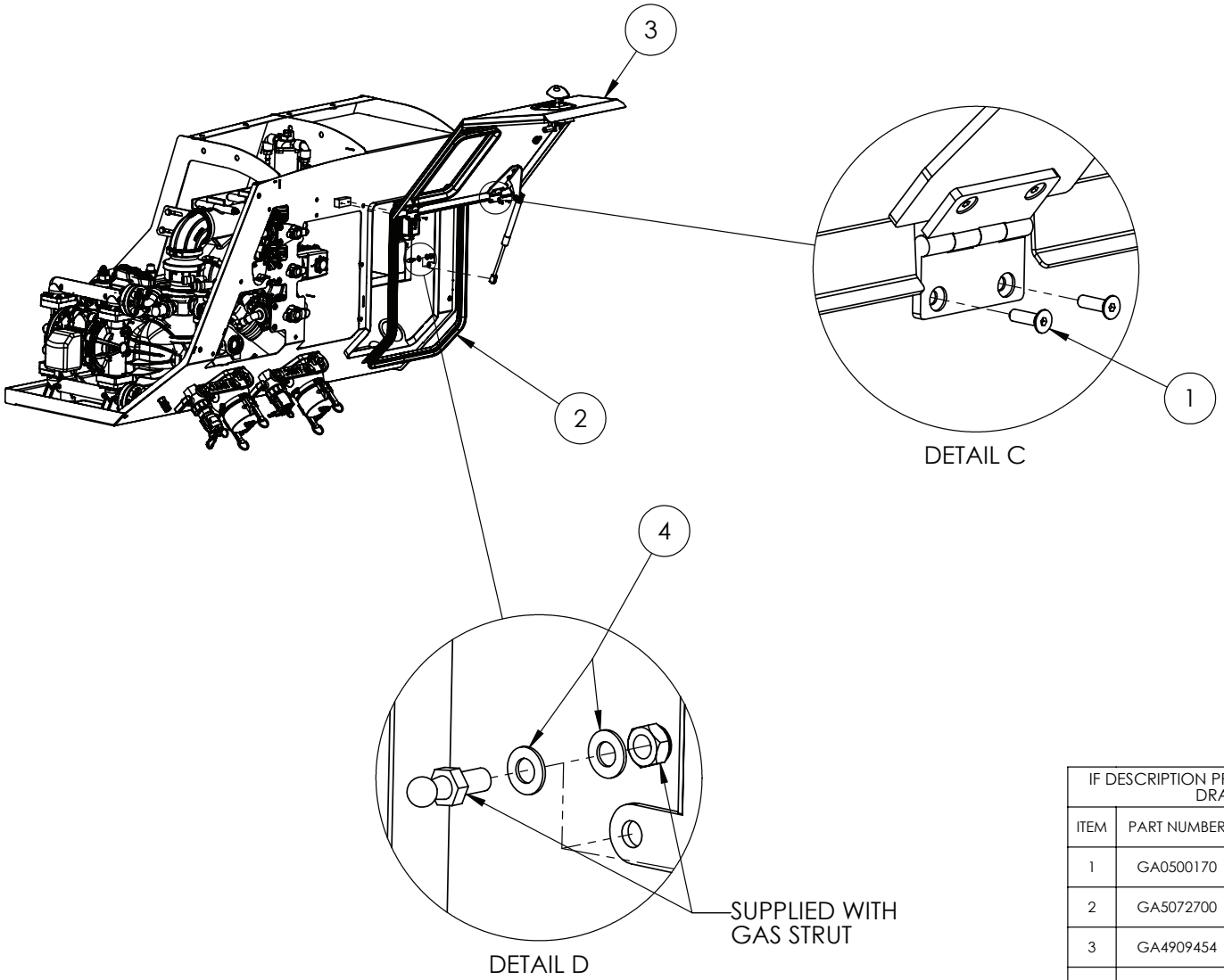

IF DESCRIPTION PREFIX IS ASSEMBLY DRAWING ONLY OR PRODUCTION DRAWING ONLY THE ITEM IS NOT FOR SALE			
ITEM	PART NUMBER	DESCRIPTION	QTY
1	GA0500170	CSCS M4 X 14 SS A2-70	4
2	GA5072700	PRAIRIE PRO 2021, LH POD, TOOLBOX FRAME, PINCHWELD	1.8
3	GA4909454	PRODUCTION DRAWING ONLY, PRAIRIE PRO MY20, LH POD, TOOLBOX DOOR	1
4	GA5003651	WASHER M8 FLAT SS	2
GA6100980-04 GOLDACRES		LH POD ASSEMBLY, PRAIRIE PRO, 2021	REV 03.A

Tool Box Door (New)

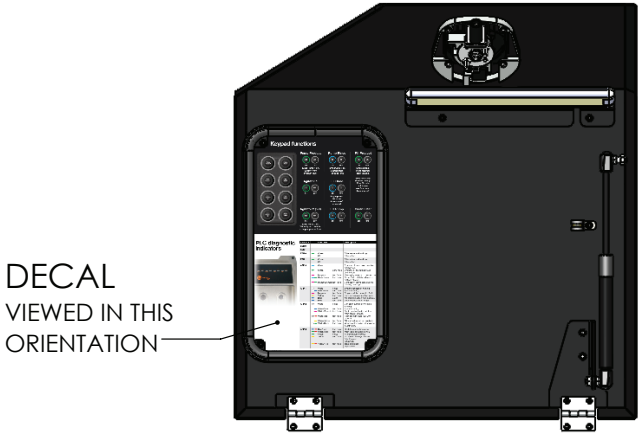

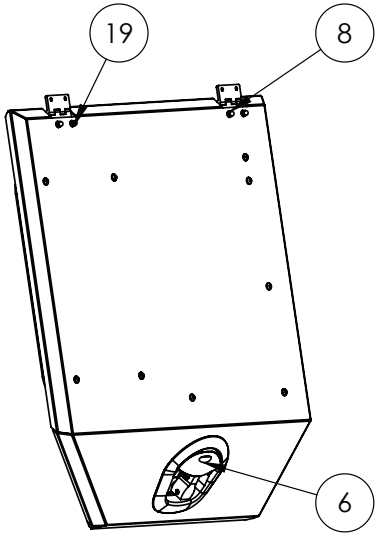

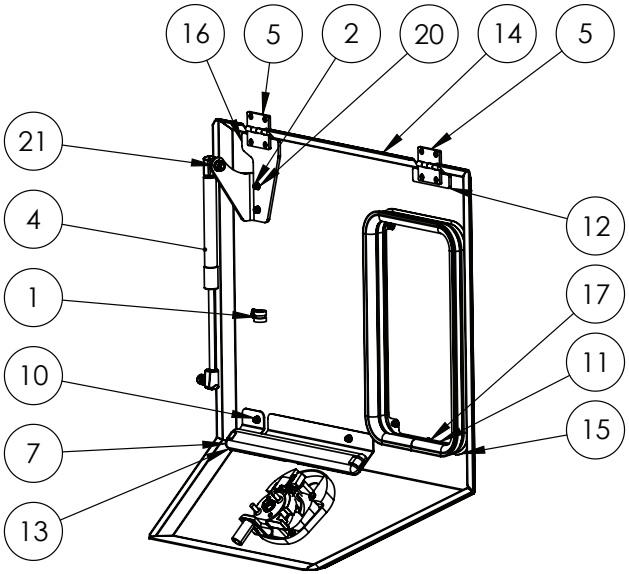

IF DESCRIPTION PREFIX IS ASSEMBLY DRAWING ONLY OR PRODUCTION DRAWING ONLY THE ITEM IS NOT FOR SALE			
ITEM	PART NUMBER	DESCRIPTION	QTY
1	GA5050120	10mm RUBBER LINED HOSE CLAMP	1
2	GA0500092	BHCS M5 X 12 SS A2-70	9
3	GA0500170	CSCS M4 X 14 SS A2-70	4
4	GA5025935	GAS STRUT, 325MM LENGTH, 123mm STROKE, 10MM BALL ENDS, 500N	1
5	GA5020415	HINGE CABIN S/S 50 X 52 X 3	2
6	GA5079028	LOCK, COMPRESSION, WHALE TAIL, BLACK WITH CHROME HANDLE	1
7	GA4950005	LIGHT, LED STRIP LIGHT, ASSEMBLY, G6, TOOLBOX	1
8	GA0500114	NUT M4 DOME SS	4
9	GA5049465	NUT M3 NYLOC SS	2
10	GA5003974	NUT M5 NYLOC ZP	9
11	GA8701501	PRAIRIE PRO 2021, LH POD, TOOLBOX DOOR, DECAL	1
12	GA4411720	PRAIRIE PRO 2021, LH POD, TOOLBOX DOOR, HINGE SPACER	1
13	GA5025946	PRAIRIE PRO 2021, LH POD, TOOLBOX DOOR, LIGHT BRACKET	1
14	GA4410266	PRAIRIE PRO 2021, LH POD, TOOLBOX DOOR, MAIN	1
15	GA5072700	PRAIRIE PRO 2021, LH POD, TOOLBOX DOOR, PINCHWELD	1.1
16	GA4000132	PRAIRIE PRO 2021, LH POD, TOOLBOX DOOR, STRUT MOUNT	1
17	GA4415840	PRAIRIE PRO 2021, LH POD, TOOLBOX DOOR, UI INGRESS SURROUND	1
18	GA5011351	WASHER M3 FLAT SS	2
19	GA5020510	WASHER M4 FLAT SS	4
20	GA5003983	WASHER M5 FLAT SS	18
21	GA5003651	WASHER M8 FLAT SS	2
GA4909454 GOLDACRES		PRODUCTION DRAWING ONLY, PRAIRIE PRO MY20, LH POD, TOOLBOX DOOR	REV 00.A

Tool Box Door Assembly (New)

GAS STRUT AND HINGES

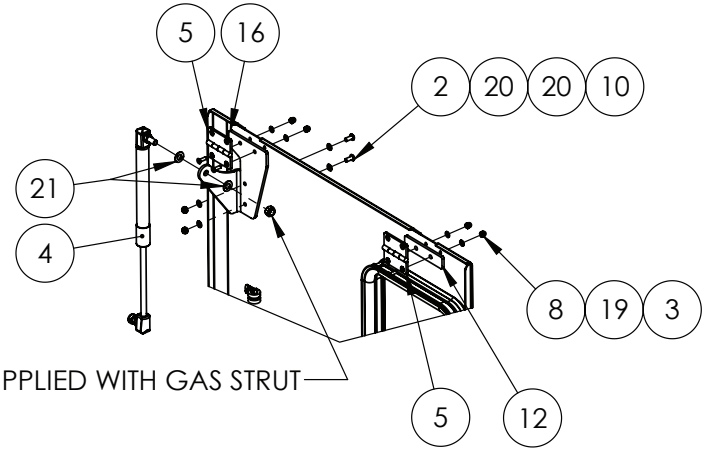

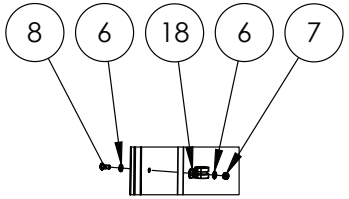

HOSE CLAMP

INGRESS TRAY

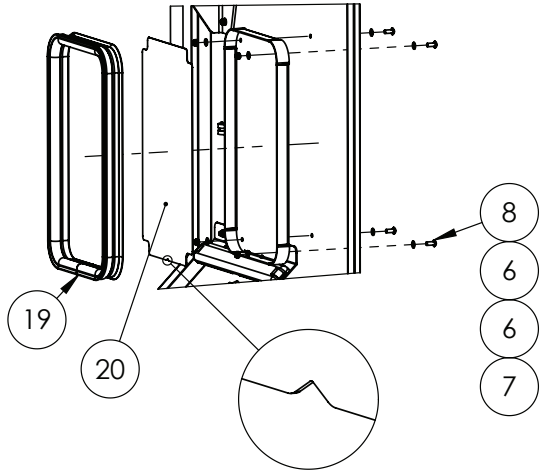

DETAIL A

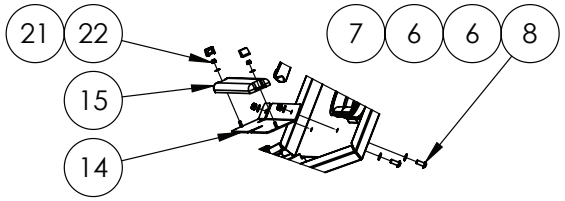

LIGHT AND BRACKET

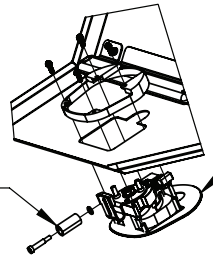

LONG BARREL
PARTS CONTAINED WITHIN
THE COMPRESSION LATCH
PACKAGING BOX.

COMPRESSION LATCH
ALL PARTS CONTAINED WITHIN THE
COMPRESSION LATCH PACKAGING BOX.

IF DESCRIPTION PREFIX IS ASSEMBLY DRAWING ONLY OR PRODUCTION DRAWING ONLY THE ITEM IS NOT FOR SALE			
ITEM	PART NUMBER	DESCRIPTION	QTY
1	GA5050120	10mm RUBBER LINED HOSE CLAMP	1
2	GA0500092	BHCS M5 X 12 SS A2-70	9
3	GA0500170	CSCS M4 X 14 SS A2-70	4
4	GA5025935	GAS STRUT, 325MM LENGTH, 123mm STROKE, 10MM BALL ENDS, 500N	1
5	GA5020415	HINGE CABIN S/S 50 X 52 X 3	2
6	GA5079028	LOCK, COMPRESSION, WHALE TAIL, BLACK WITH CHROME HANDLE	1
7	GA4950005	LIGHT, LED STRIP LIGHT, ASSEMBLY, G6, TOOLBOX	1
8	GA0500114	NUT M4 DOME SS	4
9	GA5049465	NUT M3 NYLOC SS	2
10	GA5003974	NUT M5 NYLOC ZP	9
11	GA8701501	PRAIRIE PRO 2021, LH POD, TOOLBOX DOOR, DECAL	1
12	GA4411720	PRAIRIE PRO 2021, LH POD, TOOLBOX DOOR, HINGE SPACER	1
13	GA5025946	PRAIRIE PRO 2021, LH POD, TOOLBOX DOOR, LIGHT BRACKET	1
14	GA4410266	PRAIRIE PRO 2021, LH POD, TOOLBOX DOOR, MAIN	1
15	GA5072700	PRAIRIE PRO 2021, LH POD, TOOLBOX DOOR, PINCHWELD	1.1
16	GA4000132	PRAIRIE PRO 2021, LH POD, TOOLBOX DOOR, STRUT MOUNT	1
17	GA4415840	PRAIRIE PRO 2021, LH POD, TOOLBOX DOOR, UI INGRESS SURROUND	1
18	GA5011351	WASHER M3 FLAT SS	2
19	GA5020510	WASHER M4 FLAT SS	4
20	GA5003983	WASHER M5 FLAT SS	18
21	GA5003651	WASHER M8 FLAT SS	2
GA4909454 GOLDACRES	PRODUCTION DRAWING ONLY, PRAIRIE PRO MY20, LH POD, TOOLBOX DOOR		REV 00.A

Tool Box Door Assembly (Old)

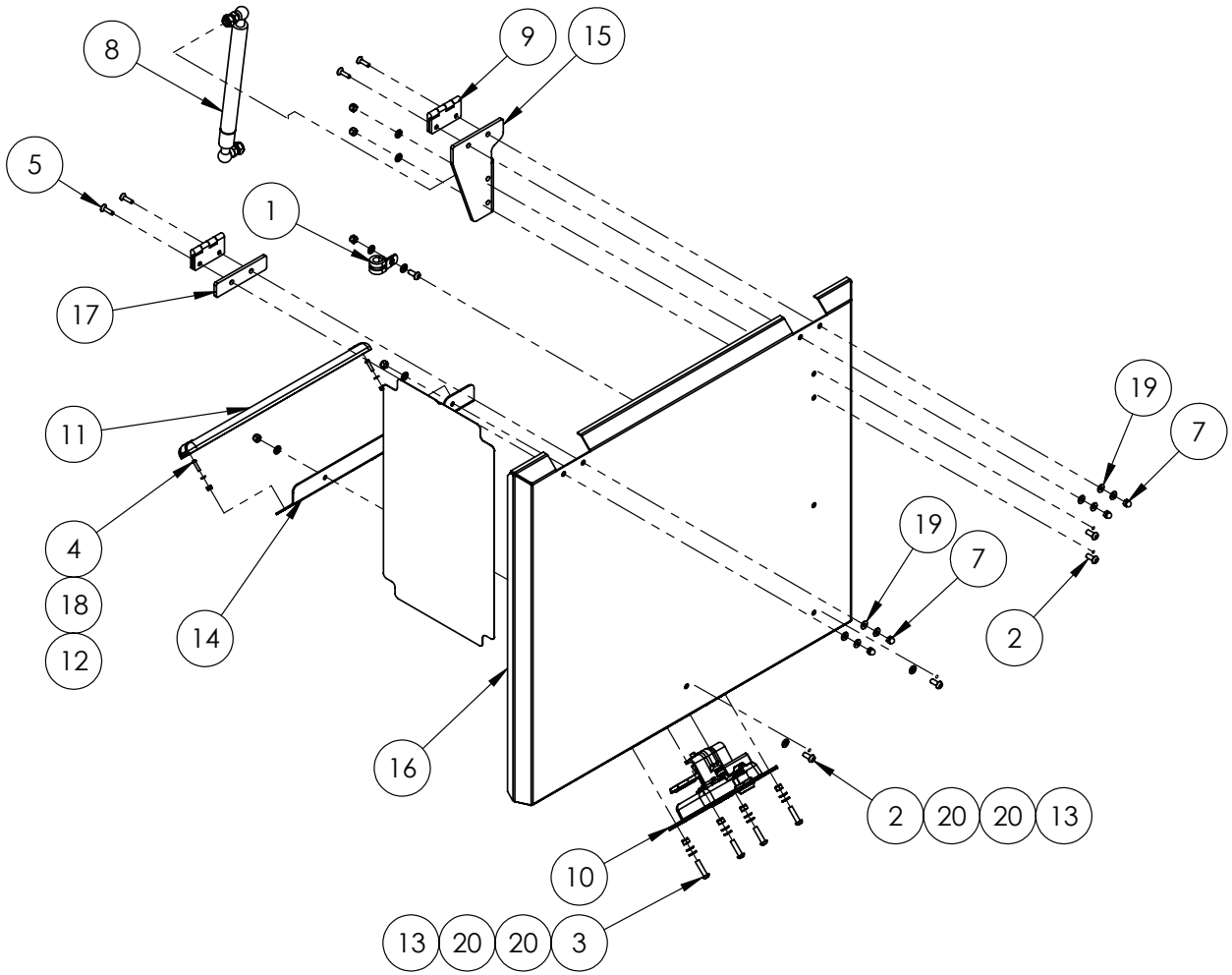

IF DESCRIPTION PREFIX IS ASSEMBLY DRAWING ONLY OR PRODUCTION DRAWING ONLY THE ITEM IS NOT FOR SALE			
ITEM	PART NUMBER	DESCRIPTION	QTY
1	GA5050120	10mm RUBBER LINED HOSE CLAMP	1
2	GA0500092	BHCS M5 X 12 GR12.9 ZP	5
3	GA0500004	BHCS M5 X 20 SS A2-70	4
4	GA5003083	BOLT PAN HEAD M3 X 12	2
5	GA0500153	CSCS M4 X 16 SS A2-70	4
6	GA8701501	PRAIRIE PRO 2021, LH POD, TOOLBOX DOOR, DECAL	1
7	GA0500114	DOME NUT, M4, 304 SS	4
8	GA5073870	GAS STRUT, 6/15 DIAMETER, 375 EXTENDED LENGTH, 150mm STROKE, BALL ENDS, 450N	1
9	GA5020415	HINGE CABIN S/S 50 X 52 X 3	2
10	GA5078512	LATCH, LOCK, T BAR, SUIT TOOL BOX	1
11	GA4950005	LIGHT, LED STRIP LIGHT, ASSEMBLY, G6, TOOLBOX	1
12	GA5049465	M3 NYLOC NUT SS	2
13	GA5003974	NUT M5 NYLOC ZP	9
14	GA4410600	PLATE, LH POD, DOOR LIGHT BRACKET, PRAIRIE PRO, 2021	1
15	GA4410275	PLATE, LH POD, DOOR STRUT MOUNT, PRAIRIE PRO, 2021	1
16	GA4410265	PLATE, LH POD, TOOL BOX DOOR, PRAIRIE PRO, 2021	1
17	GA4411720	PRAIRIE PRO 2021, LH POD, TOOLBOX DOOR, HINGE SPACER	1
18	GA5011351	WASHER 3mm FLAT SS	2
19	GA5020510	Washer 4mm Flat SS	8
20	GA5003983	WASHER 5mm FLAT SS	16
GA4909220 GOLDACRES		PRODUCTION DRAWING ONLY, TOOL BOX DOOR ASSEMBLY, LH POD, PRAIRIE PRO MY20	REV 02

NOTE:

ITEM 16 GA4410265 SUPERSEDED. IF REQUIRED, COMPLETE NEW DOOR ASSEMBLY TO BE ORDERED GA4909454

LH Pod, Hand Wash Tank Mounting

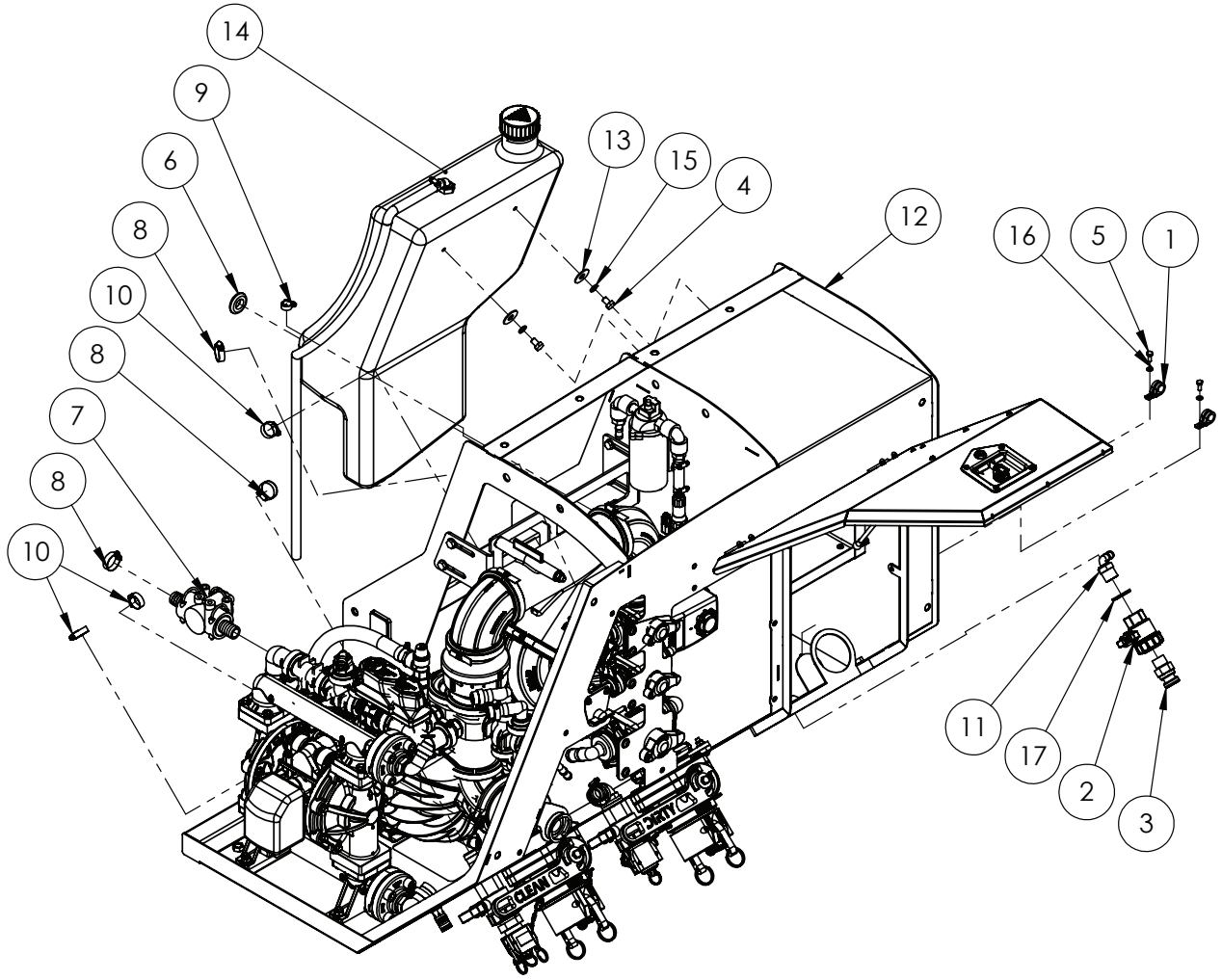

IF DESCRIPTION PREFIX IS ASSEMBLY DRAWING ONLY OR PRODUCTION DRAWING ONLY THE ITEM IS NOT FOR SALE			
ITEM	PART NUMBER	DESCRIPTION	QTY
1	GA5049825	19mm RUBBER LINED HOSE CLAMP	2
2	GA5078163	3/4 FPT, 3/4 PORT UNION VLV, UV075FP	1
3	GA5077134	3/4" MALE ADAPTER WITH 3/4" MALE THREAD	1
4	GA5006143	BOLT M10 X 16 GR8.8 ZP	2
5	GA5004041	BOLT M6 X 16 GR8.8 ZP	2
6	GA5069855	GROMMET, RUBBER, 28 X 1.6 X 35MM, WIRING	1
7	GA4902255	HOPPER TEE ASSEMBLY, PLUMBING POD, G5, G6, G8, MY17	1
8	GA5001681	HOSE CLAMP, 1" SS (20-32/12W)	3
9	GA5000469	HOSE CLAMP, 1/2" SS 12-20/9W3	1
10	GA5000999	HOSE CLAMP, 3/4" SS (16-27/12W)	3
11	GA5077710	HOSE BARB, ELBOW, 90 DEGREE, 3/4 MALE THREAD X 1/2 HOSE, BANJO	1
12	GA6100980-04	LH POD ASSEMBLY, PRAIRIE PRO, 2021	1
13	GA4409180	PLATE, SIDE COVERS, WASHER, G6 MY20	2
14	GA4951145	PRODUCTION DRAWING ONLY, 30L HANDWASH TANK ASSEMBLY, PRAIRIE PRO	1
15	GA5000137	WASHER 10mm SPRING SS	2
16	GA5004437	WASHER 6mm FLAT SS	2
17	GA4522315	WASHER, GENERAL SPACER	2
GA6100980-05 GOLDACRES		LH POD ASSEMBLY, PRAIRIE PRO, 2021	REV 00

Hopper Tee Assembly

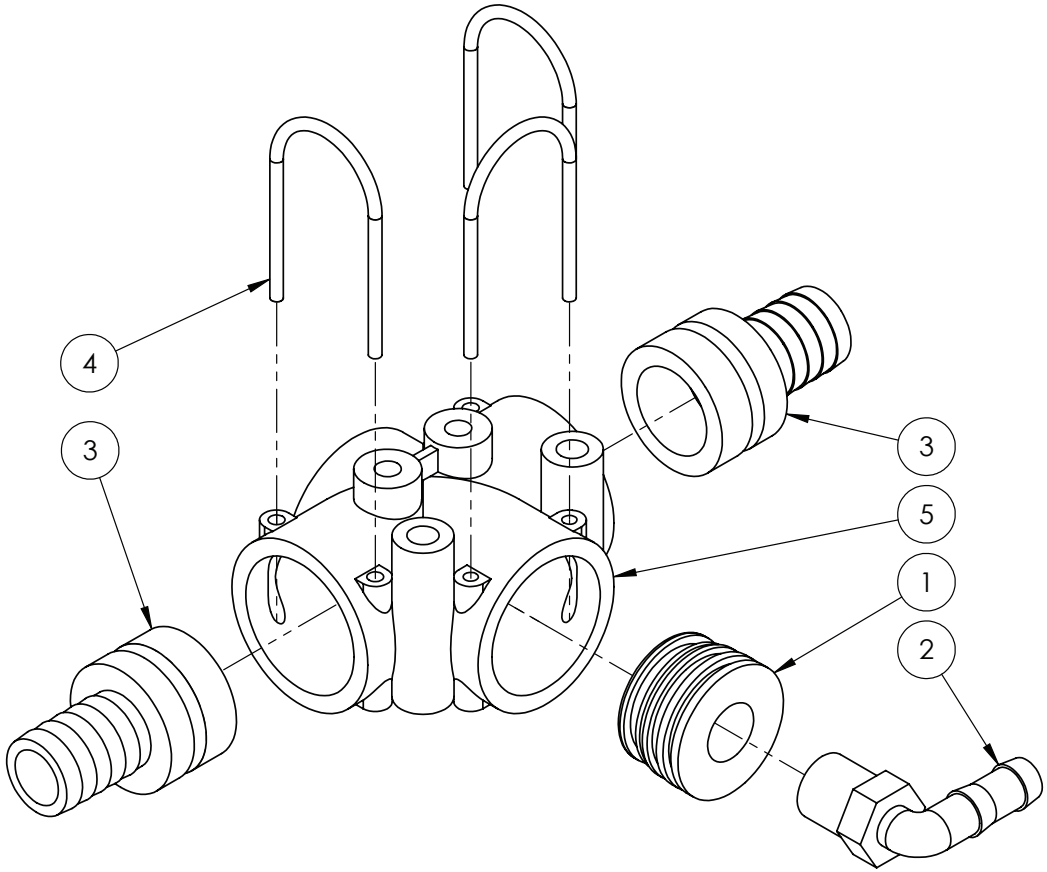

IF DESCRIPTION PREFIX IS ASSEMBLY DRAWING ONLY OR PRODUCTION DRAWING ONLY THE ITEM IS NOT FOR SALE			
ITEM	PART NUMBER	DESCRIPTION	QTY
1	GA4582345	DUMMY PLUG AS40 G1/2 FEMALE (45MM DELRON)	1
2	GA5077708	HOSE BARB, ELBOW, 90 DEGREE, 1/2 MALE THREAD X 1/2 HOSE, BANJO, HB050-90	1
3	GA5065580	PLUG IN HOSE TAIL AS40/25	2
4	GA5065690	SAFETY PIN AS40	3
5	GA5065560	T-PIECE 3XAS40 M8 INSERTS	1
GA4902255 GOLDACRES		HOPPER TEE ASSEMBLY, PLUMBING POD, G5, G6, G8, MY17	REV 00

Hand Wash Tank Assembly

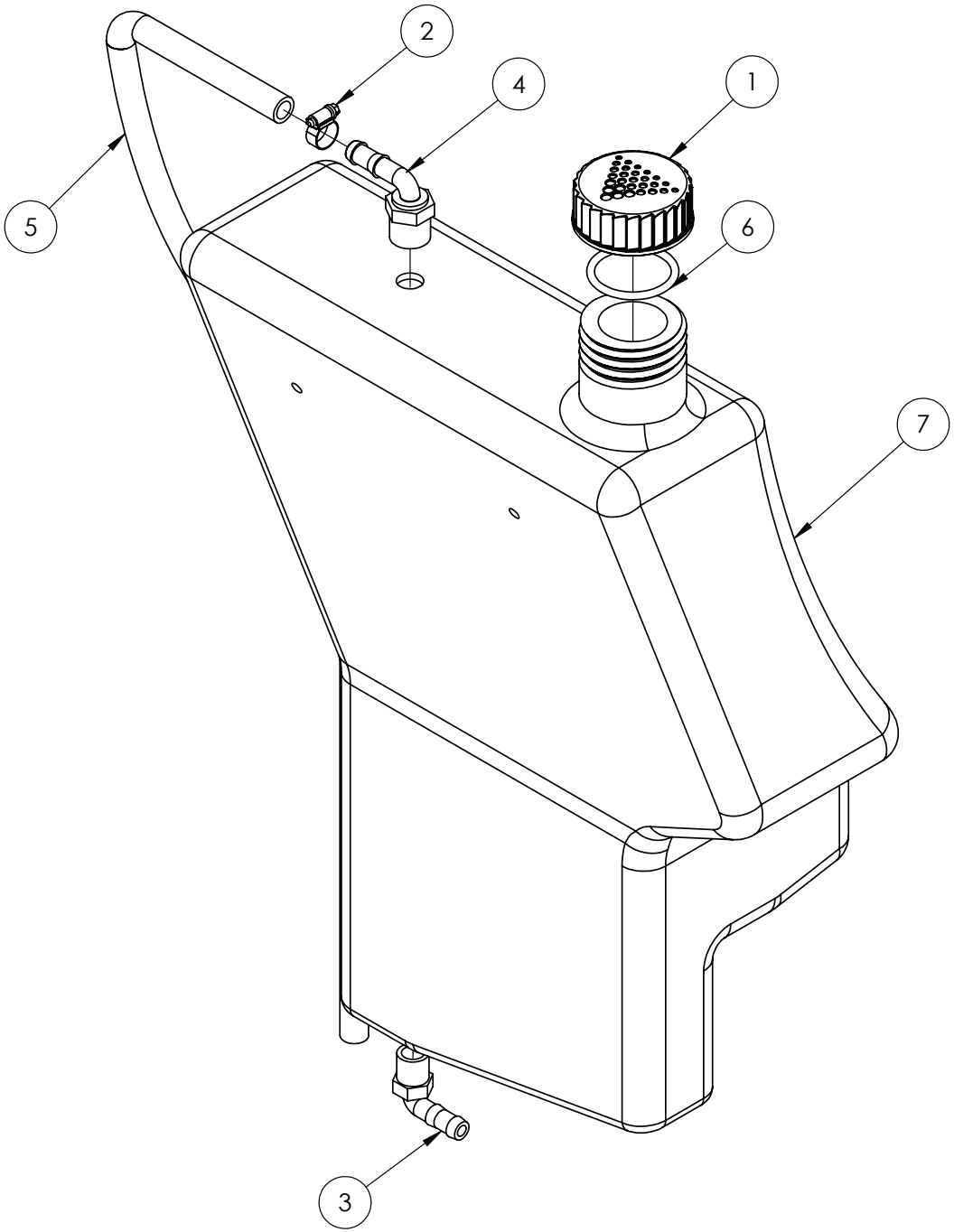

IF DESCRIPTION PREFIX IS ASSEMBLY DRAWING ONLY OR PRODUCTION DRAWING ONLY THE ITEM IS NOT FOR SALE			
ITEM	PART NUMBER	DESCRIPTION	QTY
1	GA5075400	CAP, TANK, PLASTIC, LID, M65.5X8 THREAD, GOLDACRES LOGO	1
2	GA5000469	HOSE CLAMP, 1/2" SS 12-20/9W3	1
3	GA5077708	HOSE BARB, ELBOW, 90 DEGREE, 1/2 MALE THREAD X 1/2 HOSE, BANJO, HB050-90	1
4	GA5077710	HOSE BARB, ELBOW, 90 DEGREE, 3/4 MALE THREAD X 1/2 HOSE, BANJO	1
5	GA2000456	HOSE, 1/2" PRESSURE, CUT 1250mm	1
6	GA5009187	O RING, 60 OD, 50 ID X 5mm, SUITS EXACTA TANK CAP	1
7	GA8500031	TANK, 30L, HAND WASH, BLACK, PRAIRIE PRO MY21	1
GA4951145 GOLDACRES		PRODUCTION DRAWING ONLY, 30L HANDWASH TANK ASSEMBLY, PRAIRIE PRO	REV 00

LH Pod, Cover

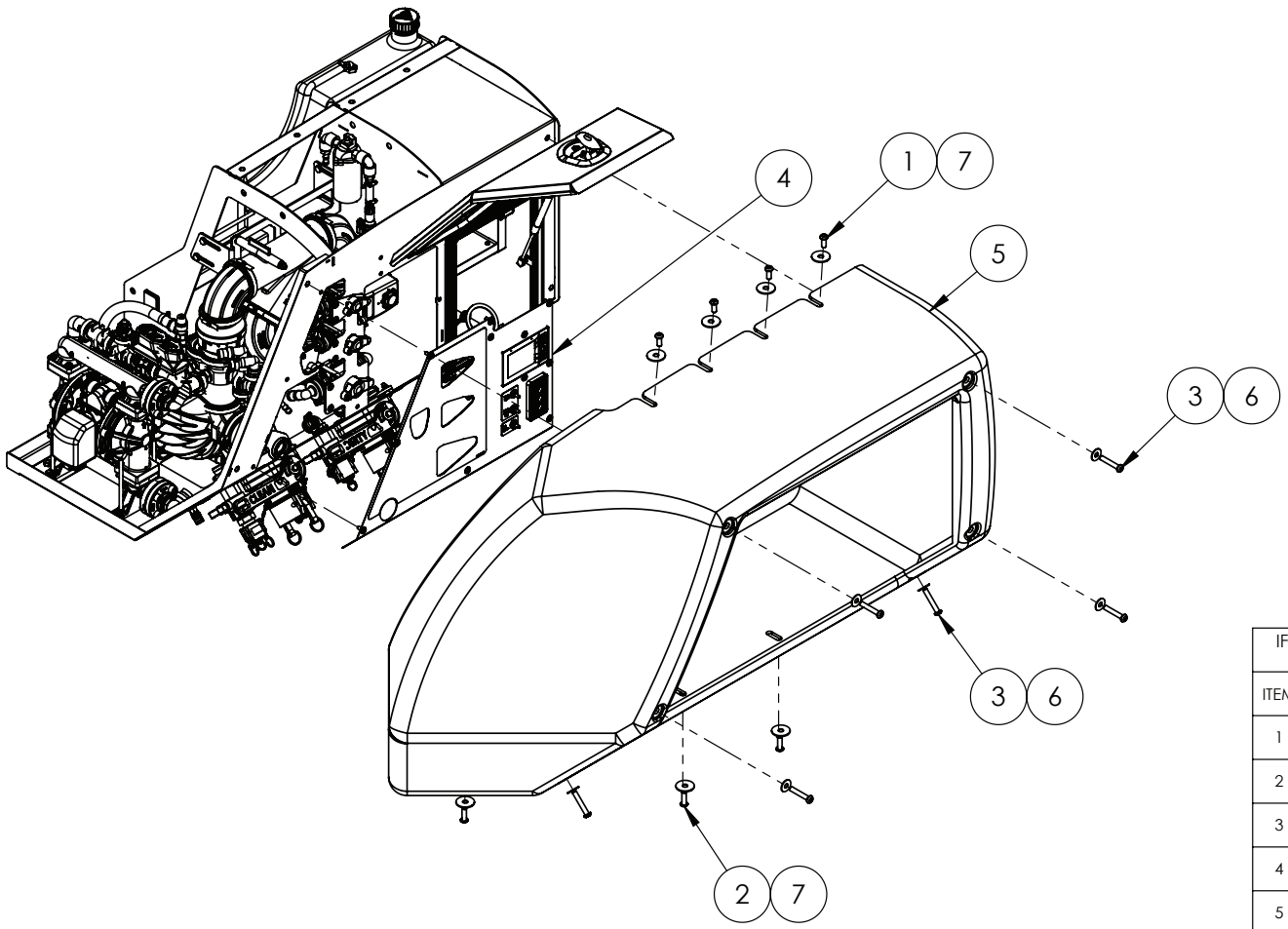

IF DESCRIPTION PREFIX IS ASSEMBLY DRAWING ONLY OR PRODUCTION DRAWING ONLY THE ITEM IS NOT FOR SALE			
ITEM	PART NUMBER	DESCRIPTION	QTY
1	GA5051530	BHCS M12 X 30 SS A2-70	4
2	GA0500176	BHCS M12 X 40 SS A2-70	5
3	GA0500163	BHCS M12 X 70 SS A2-70	6
4	GA6101240	COVER PLATE ASSEMBLY, LH POD, PRAIRIE PRO, MY21	1
5	GA5078637	COVER, LH POD, ROTOMOULDED PLATIC, BLACK, PRAIRIE PRO, 2021	1
6	GA4409180	PLATE, SIDE COVERS, WASHER, G6 MY20	6
7	GA4535345	WASHER, 50 OD X 14.5 ID, SS	9
GA6100980-06 GOLDACRES		LH POD ASSEMBLY, PRAIRIE PRO, 2021	REV 02.C

LH Pod, Controls & Cover Plate Assembly

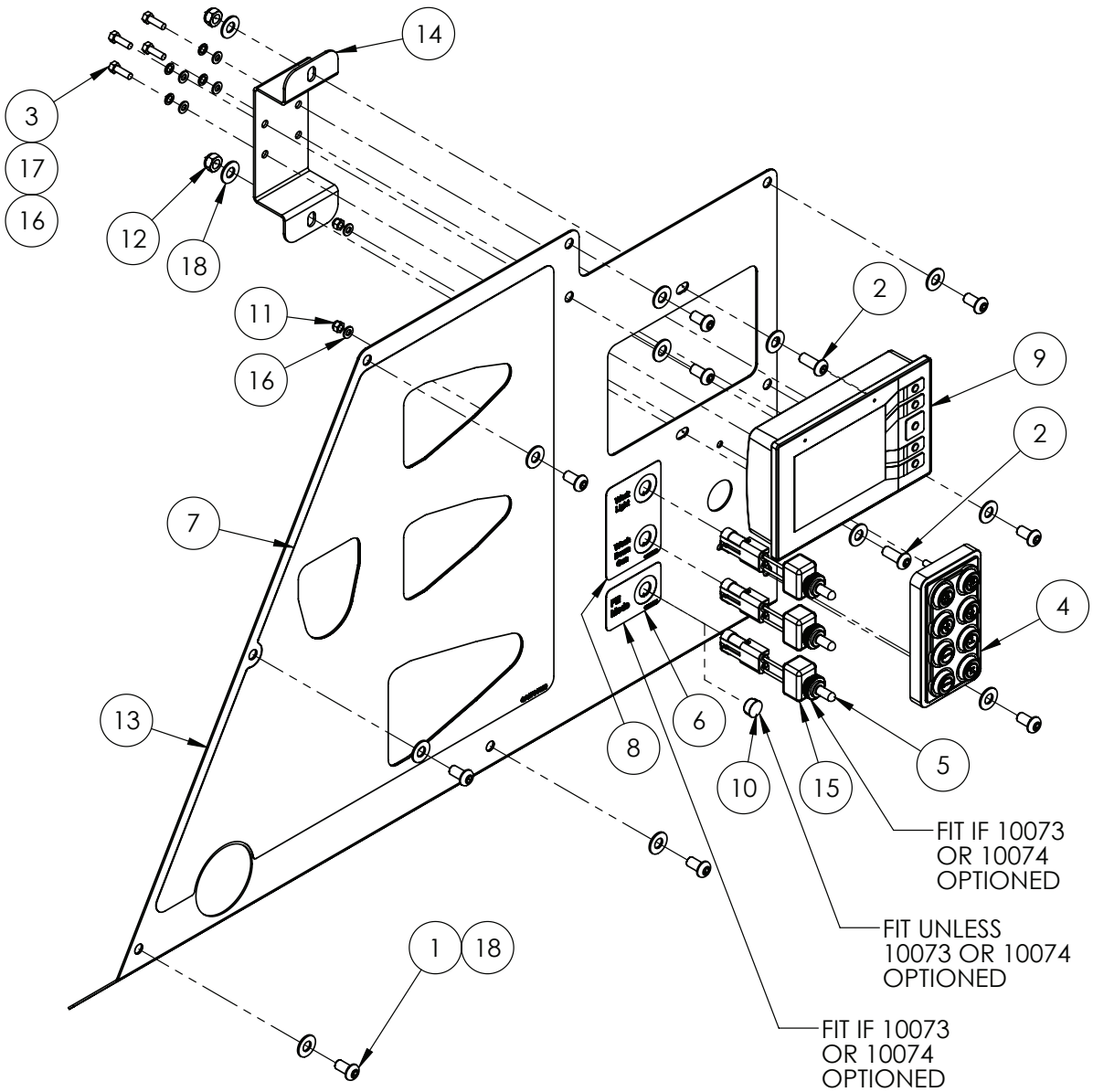

IF DESCRIPTION PREFIX IS ASSEMBLY DRAWING ONLY OR PRODUCTION DRAWING ONLY THE ITEM IS NOT FOR SALE			
ITEM	PART NUMBER	DESCRIPTION	QTY
1	GA5004696	BHCS M8 X 16 SS A2-70	9
2	GA0500102	BHCS M8 X 20 SS A2-70	2
3	GA5003577	BOLT M5 X 16 GR8.8 ZP	4
4	GA4950011	CAN KEYPAD ASSEMBLY, 8 WAY, SUIT MY21 PRAIRIE PRO POD	1
5	GA5012175	COVER, TOGGLE SWITCH, WATERPROOF, NARVA	3
6	GA8701574	DECAL, LH POD FILL MODE	1
7	GA8701500	DECAL, LH POD PANEL	1
8	GA8701499	DECAL, LH POD WORK LIGHT WASH DOWN GUN	1
9	GA3000620	DISPLAY SCREEN, 5", NON TOUCH, IFM CR1058, PRAIRE PRO	1
10	GA5048780	DOME PLUG 12mm	1
11	GA5003974	NUT M5 NYLOC ZP	2
12	GA5052590	NUT M8 NYLOC SS	2
13	GA4410260	PLATE, LH POD, COVER PLATE, PRAIRIE PRO, 2021	1
14	GA4410285	PLATE, LH POD, EXTERNAL SCREEN MOUNT, PRAIRIE PRO, 2021	1
15	GA5060064	SWITCH, FILL PUMP, PRE ASSEMBLED LOOM WITH CONNECTOR	3
16	GA5003983	WASHER 5mm FLAT SS	6
17	GA5003629	WASHER 5mm SPRING SS	4
18	GA5003643	WASHER 8mm FLAT SS HD	13
GA6101240 GOLDACRES		COVER PLATE ASSEMBLY, LH POD, PRAIRIE PRO, MY21	REV 01

LH Pod, Control Panel

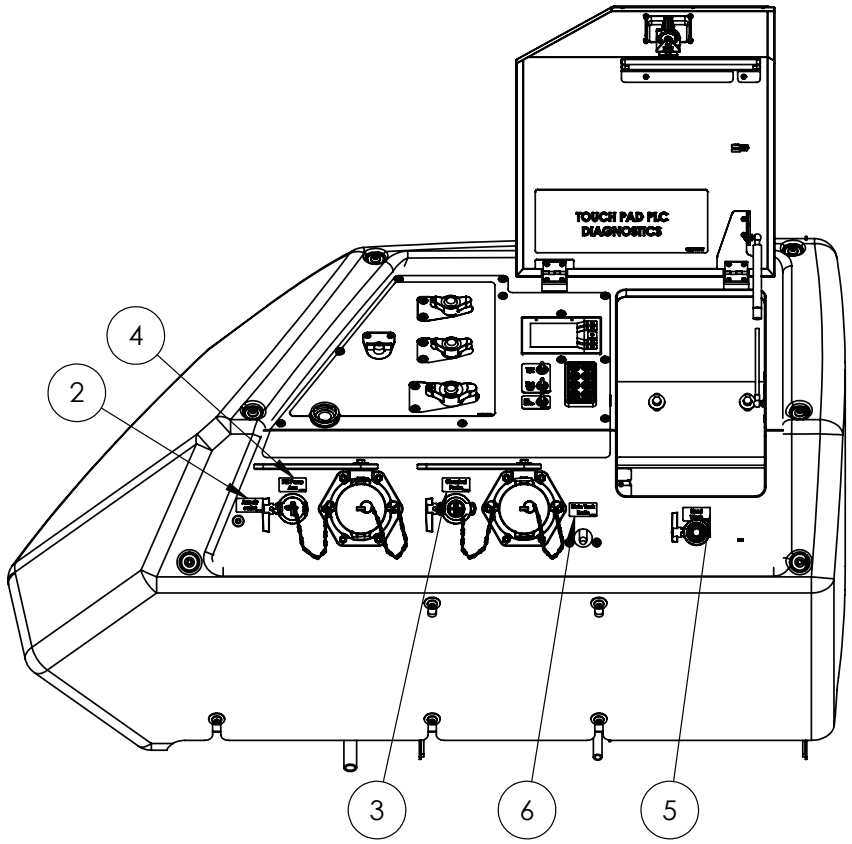

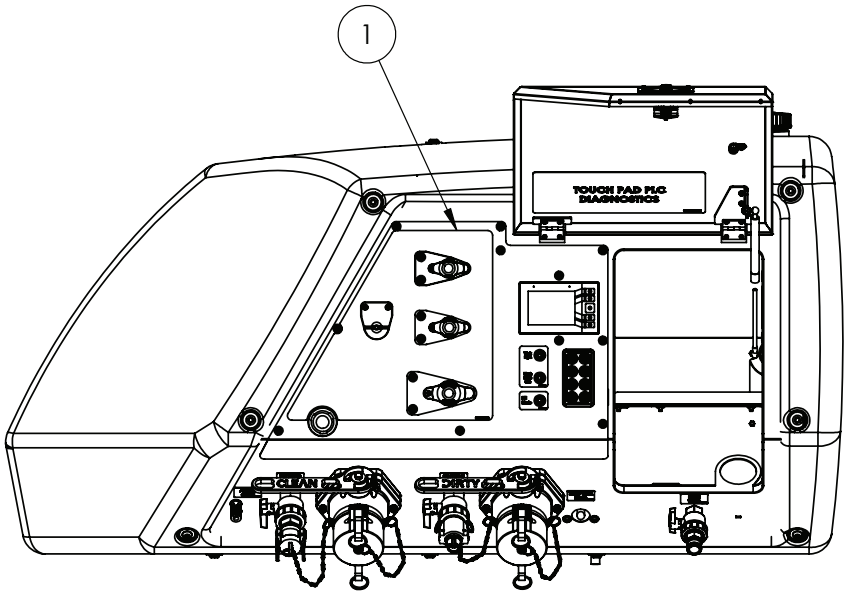

IF DESCRIPTION PREFIX IS ASSEMBLY DRAWING ONLY OR PRODUCTION DRAWING ONLY THE ITEM IS NOT FOR SALE			
ITEM	PART NUMBER	DESCRIPTION	QTY
1	GA6101240	COVER PLATE ASSEMBLY, LH POD, PRAIRIE PRO, MY21	1
2	GA8701106	DECAL, AUX AIR OUTLET	1
3	GA8701513	DECAL, CHEMICAL PROBE	1
4	GA8701512	DECAL, FILL PUMP AUX	1
5	GA8701515	DECAL, HAND WASH	1
6	GA8701514	DECAL, MAIN TANK DRAIN	1
GA6100980-06 GOLDACRES		LH POD ASSEMBLY, PRAIRIE PRO, 2021	REV 00

07 - Plumbing

Flow Meter Assembly, Raven 60P, High Pulse

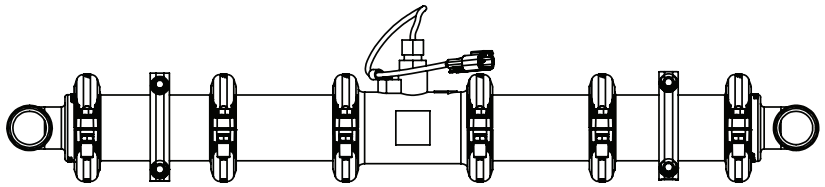

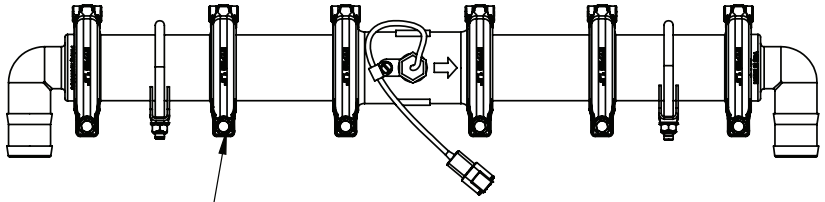

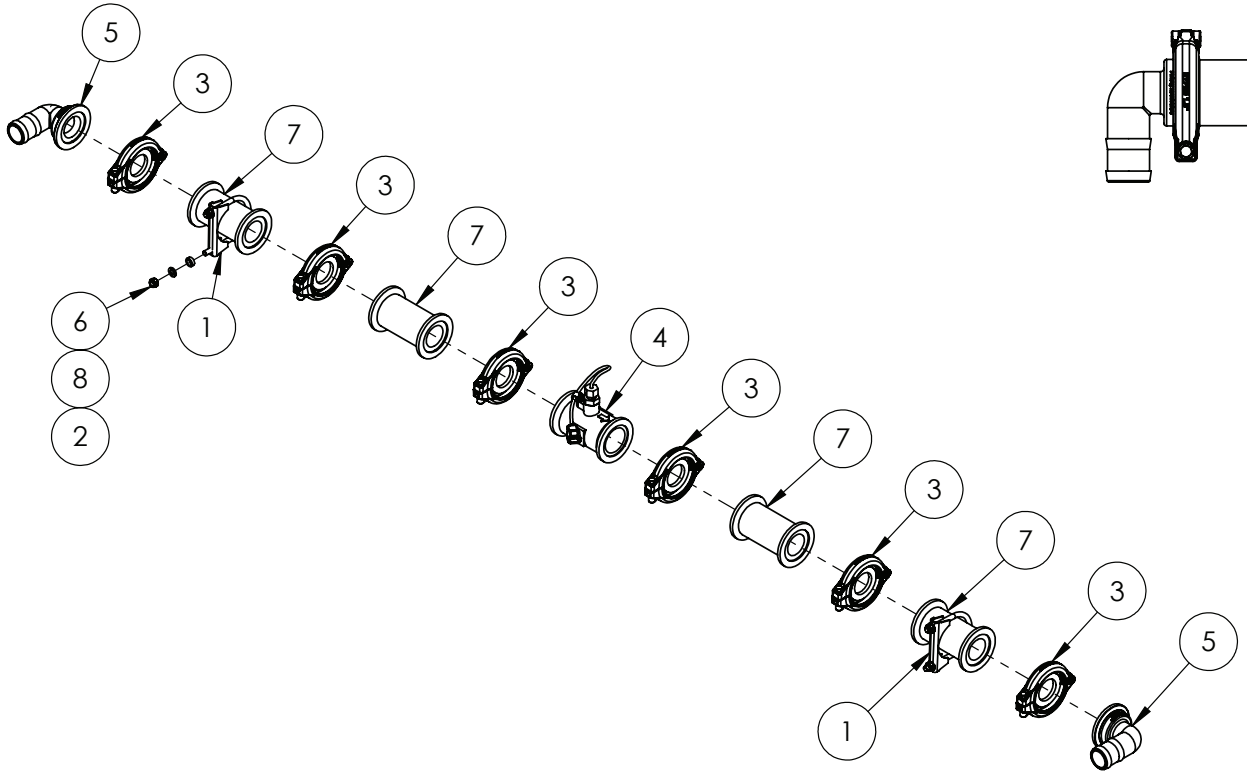

IF DESCRIPTION PREFIX IS ASSEMBLY DRAWING ONLY OR PRODUCTION DRAWING ONLY THE ITEM IS NOT FOR SALE			
ITEM	PART NUMBER	DESCRIPTION	QTY
1	GA5006689	CLAMP EXHAUST 2 5/8 (C12)	2
2	GA4552080	CRUSH TUBE, 10.2 ID X 15 OD X 5 mm LONG	4
3	GA2000114	FLANGE CLAMP, AND GASKET, 1.5", SERIES 200, HYPRO	6
4	GA3000265	FLOWMETER, RFM60P HIGH PULSE, DEUTSCH DTM, RAVEN, 0630172457	1
5	GA5077834	HOSE BARB, ELBOW, 90 DEGREE, 2" FLANGE X 1 1/2" HOSE, BANJO	2
6	GA5052590	NUT M8 NYLOC SS	4
7	GA5077840	PLUMBING COUPLING, STRAIGHT, 2" FLANGE X " FLANGE X 4 1/2" LONG, BANJO	4
8	GA5003643	WASHER 8mm FLAT SS HD	4
GA4949215 GOLDACRES		FLOW METER ASSEMBLY, LONG, RAVEN 60P HIGH PULSE WITH DEUTSCH CONNECTOR, 1 1/2" HOSE BARBS, SUIT RCM ISO BUS	REV 02

Flow Meter Assembly, Raven 60P, High Pulse

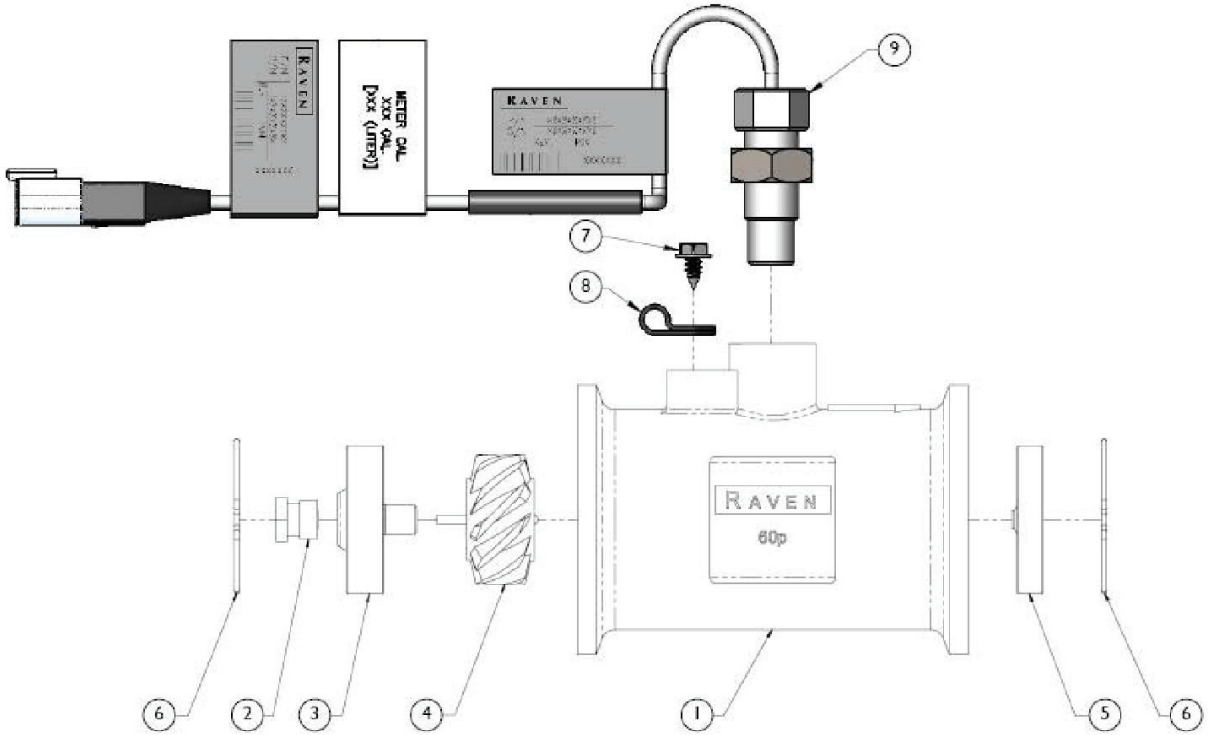

IF DESCRIPTION PREFIX IS ASSEMBLY DRAWING ONLY OR PRODUCTION DRAWING ONLY THE ITEM IS NOT FOR SALE			
ITEM	PART NUMBER	DESCRIPTION	QTY
1	GA5075890	FLOWMETER, RFM60P HIGH PULSE, RAVEN,	1
2	GA5026132	TURBINE, STUD, POLY, FLOWMETER, RFM-60	2
3	GA5075870	HUB/BEARING ASY UPSTREAM RFM60	1
4	GA5075869	ROTOR/MAGNET ASY RFM-60S	1
5	GA5075871	BEARING, DOWN STREAM END BEARING SUIT RFM60S FLOW METER, RAVEN, 0630171769	1
6	GA5026133	RETAINING RING, WIREFORM, FLOWMETER, RAVEN RFM-60	2
7	GA5076734	SCW 10-16 X 3/8 SLTD HEX	1
8	GA5076966	CLAMP CABLE PLASTIC 1/4X1/2	1
9	GA3000399	SENSOR, EXTERNAL FLOW METER, HIGH PULSE, SUIT 15P AND 60P, DEUTSCH CONNECTOR, RAVEN, 10630172458B	1
GA5075890 GOLDACRES		FLOW METER, RFM60P HIGH PULSE, RAVEN	REV 00

Boom Recirculation Valve, Assembly

OPTIONAL PARTS			
ITEM	PART NUMBER	DESCRIPTION	QTY
A	GA5077047	REPLACEMENT 12V MOTOR, SUIT TEEJET VALVE GA5077319, BARE WIRES, BEC POS 50515-22CP05	-

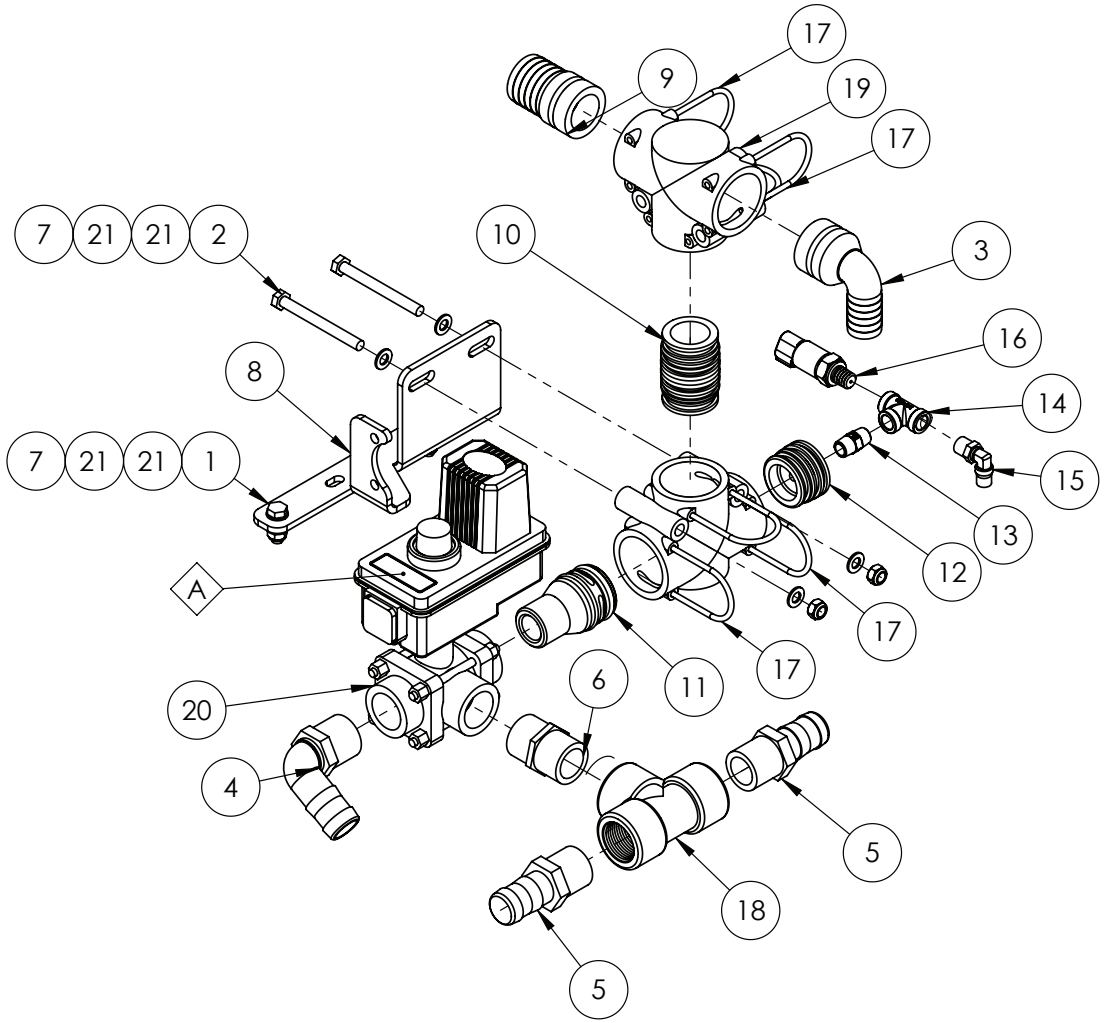

IF DESCRIPTION PREFIX IS ASSEMBLY DRAWING ONLY OR PRODUCTION DRAWING ONLY THE ITEM IS NOT FOR SALE			
ITEM	PART NUMBER	DESCRIPTION	QTY
1	GA5004711	BOLT M8 X 25 GR8.8 ZP	2
2	GA5004749	BOLT M8 X 80 GR8.8 ZP	2
3	GA5065615	HOSE BARB, ELBOW 90 DEGREE, AS40 X 25mm, ALTEK	1
4	GA5077723	HOSE BARB, ELBOW, 90 DEGREE, 1" MALE X 1" HOSE, BANJO	1
5	GA5077718	HOSE BARB, STRAIGHT, 1 MALE THREAD X 1 HOSE, BANJO	2
6	GA5077914	NIPPLE, SHORT, 1" MALE THREAD X 1" MALE THREAD, BANJO	1
7	GA5004917	NUT M8 NYLOC ZP	4
8	GA4400975	PLATE, BRACKET, FLOW DISTRIBUTER AND BOOM RECIRCULATION VALVE ASSEMBLY, 48M	1
9	GA5065590	PLUG IN HOSE TAIL AS40/39	1
10	GA5065735	PLUG IN HOSE TAIL AS40/AS40	1
11	GA2000077	PLUMBING FITTING, AS40 TO 1" NPT MALE THREAD, ALTEK	1
12	GA4582160	PLUMBING ADAPTOR, PLUG, AS40 MALE X G1/4" FEMALE THREAD, ALTEK	1
13	GA2000278	PLUMBING FITTING, NIPPLE, 1/4" BSPT, SS, STAINLESS STEEL, 150 PSI	1
14	GA2000279	PLUMBING FITTING, TEE, 1/4" FEMALE, BSP, SS, STAINLESS STEEL, 150 PSI	1
15	GA5016233	PNEUMATIC FITTING, ELBOW, 90 DEGREE, 1/4 BSP MALE X 6mm PUSH IN TYPE, METAL	1
16	GA3000199	PRESSURE TRANSDUCER, 0-250PSI, 1-5V, DEUTSCH, SEALED, RAVEN, 4220000119	1
17	GA5065690	RETAINING PIN, SAFETY CLIP, SUIT AS40 PLUMBING FITTINGS, ALTEK	6
18	GA5078151	TEE, THREADED, 1" FEMALE, BANJO	1
19	GA5065555	TEE, 3 PORT, AS40 FEMALE, NO M8 INSERTS, ALTEK	2
20	GA5077319	VALVE, ELECTRIC BALL 3 WAY, SHUTOFF/BYPASS, 1", TEEJET, 344BEC-34-COC	1
21	GA5003643	WASHER 8mm FLAT SS HD	8
GA4949455 GOLDACRES		FLOW DISTRIBUTER AND BOOM RECIRCULATION VALVE ASSEMBLY,G6, MY20	REV 01

Chemical Suction Probe

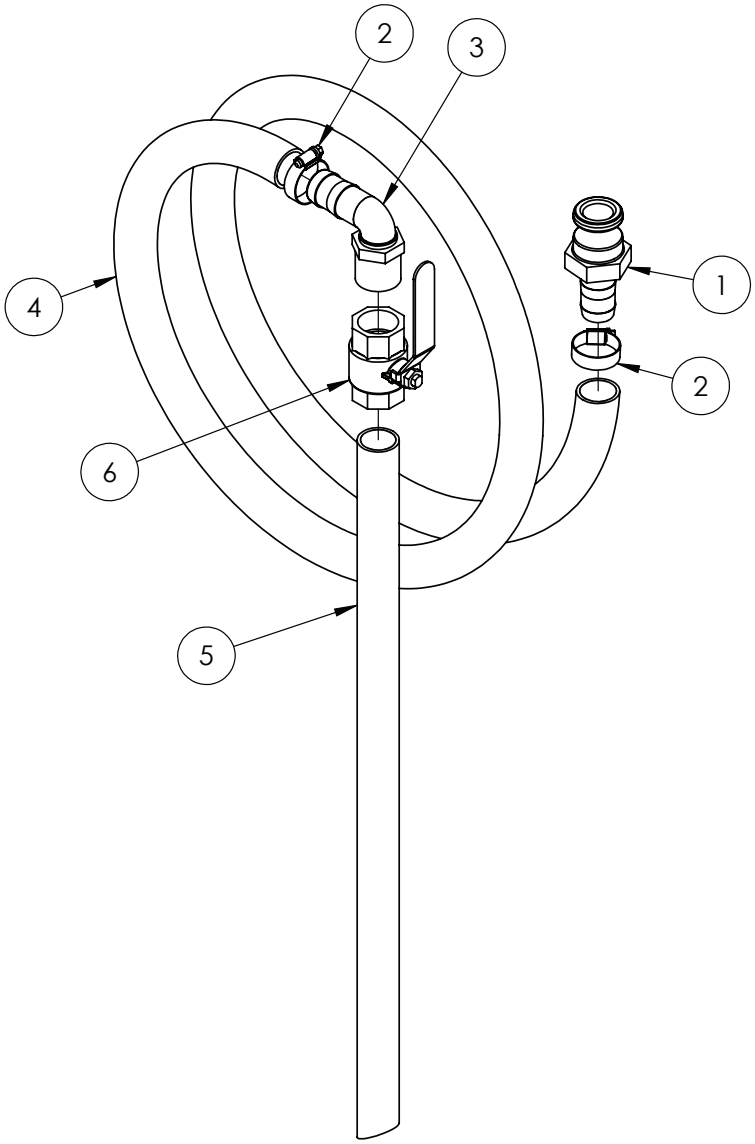

IF DESCRIPTION PREFIX IS ASSEMBLY DRAWING ONLY OR PRODUCTION DRAWING ONLY THE ITEM IS NOT FOR SALE			
ITEM	PART NUMBER	DESCRIPTION	QTY
1	GA5076011	CAM LEVER, 1 MALE COUPLING X 1 HOSE BARB, BANJO	1
2	GA5001681	HOSE CLAMP, 1" SS (20-32/12W)	2
3	GA5077723	HOSE BARB, ELBOW, 90 DEGREE, 1" MALE X 1" HOSE, BANJO	1
4	GA2000220	PVC HOSE 25mm CUT 3.2M	1
5	GA5013603	POLY PIPE 25mm CUT 630mm	1
6	GA5018319	VALVE, BALL, 25mm, 1" FEMALE, LEVER HANDLE, BRASS	1
GA4948250 GOLDACRES		PRE ASSEMBLED CHEMICAL DRUM PROBE	REV 01

Micromatic Probe, Hose Assembly

REPLACEMENT PARTS			
ITEM	PART NUMBER	DESCRIPTION	QTY
A	GA5018799	SEAL KIT, SUIT MICROMATIC / ENVIRO DRUM COUPLING	-

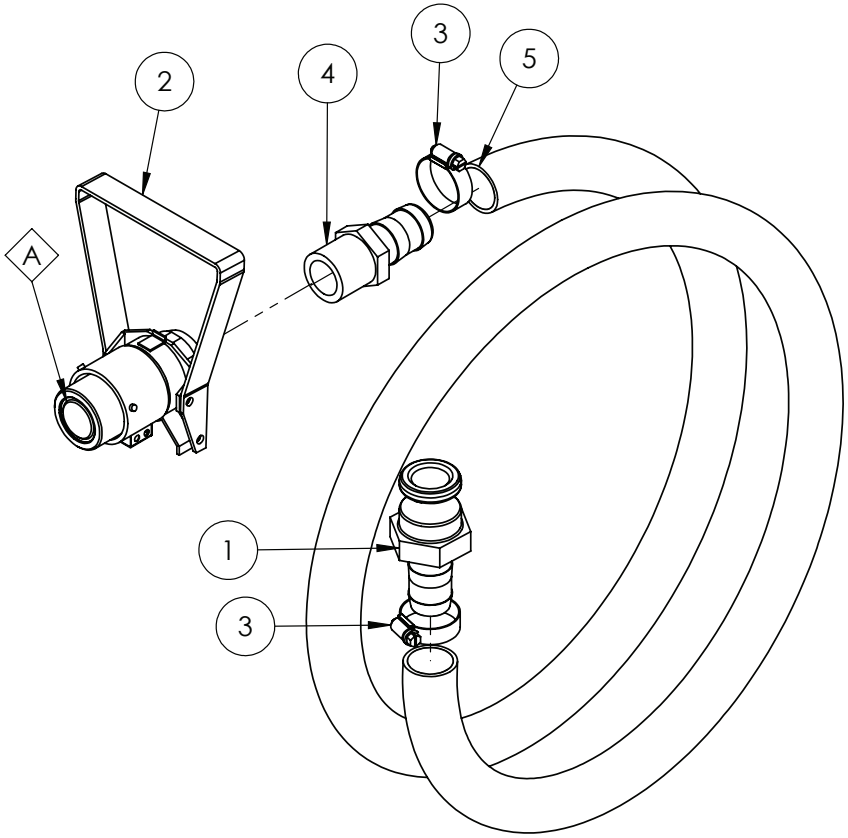

IF DESCRIPTION PREFIX IS ASSEMBLY DRAWING ONLY OR PRODUCTION DRAWING ONLY THE ITEM IS NOT FOR SALE			
ITEM	PART NUMBER	DESCRIPTION	QTY
1	GA5076011	CAM LEVER, 1 MALE COUPLING X 1 HOSE BARB, BANJO	1
2	GA5018803	COUPLER, 3 PIN, VITON FLOW CONTROL	1
3	GA5001681	HOSE CLAMP, 1" SS (20-32/12W)	2
4	GA5077718	HOSE BARB, STRAIGHT, 1 MALE THREAD X 1 HOSE, BANJO	1
5	GA2000220	PVC HOSE 25mm CUT 2840M	1
GA5020600 GOLDACRES		CHEMICAL SUCTION PROBE WITH ENVIRO	REV

Arag, 319 Series, Suction Filter

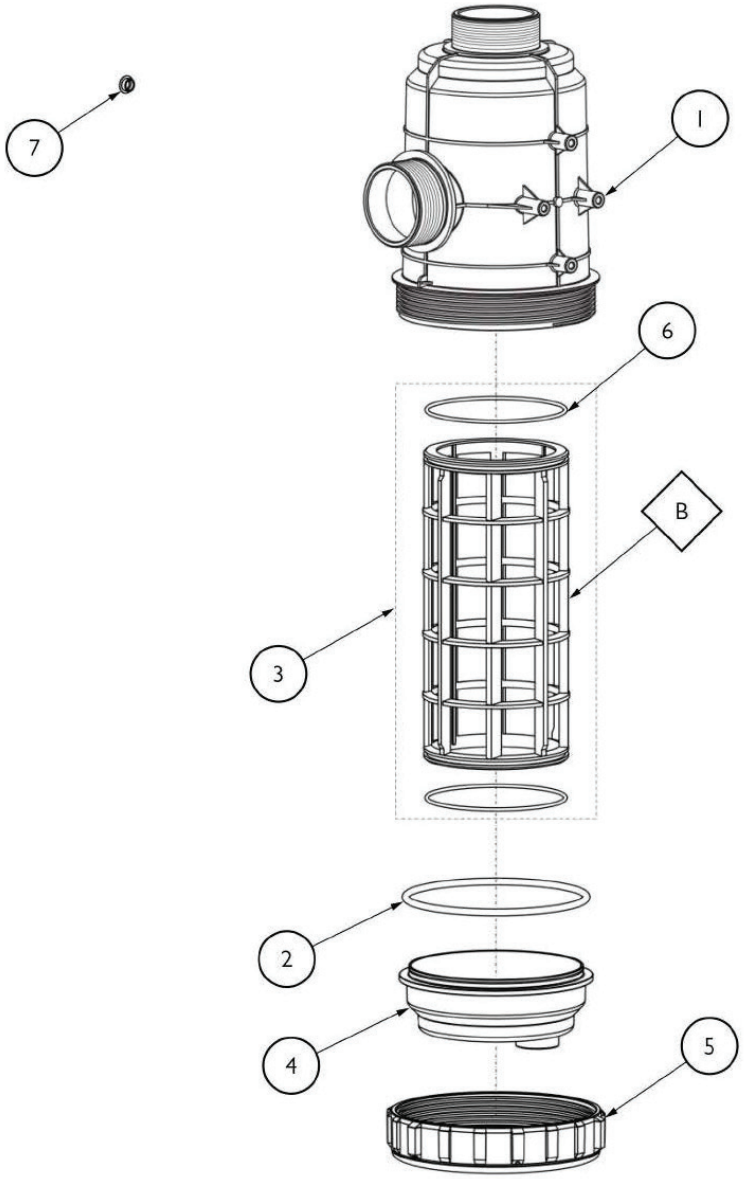

OPTIONAL PARTS			
ITEM	PART NUMBER	DESCRIPTION	QTY
A	GA4524994	SPANNER, ZINC COATED, 3" SUCTION FILTER, ARAG 319092 GA2000101	-
B	GA2000281	FILTER SCREEN, 145 X 320mm, 120 / 32 MESH, SUIT 319 3" FILTER, "GREY", ARAG	-

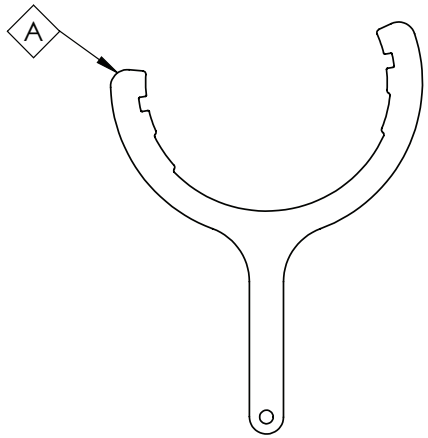

* ASSEMBLY DRAWING ONLY			
ITEM	PART NUMBER	DESCRIPTION	QTY
1	GA2000289	SUCTION FILTER BODY, SUIT ARAG 319, 319090.010	1
2	GA2000290	O RING, 6.99 X 174.6, EPDM, G11052, SUIT ARAG 319	1
	GA2000587	O-RING, 6.99 X 174.6, VITON, G11052V, SUIT ARAG GA2000101	1
3	GA2000561	FILTER SCREEN, 145 X 320mm, 32 MESH, SUIT 319 3" FILTER, "RED", ARAG	1
4	GA2000291	319 SUCTION FILTER BOWL, 319090.020	1
5	GA2000292	FLY NUT, SUCTION FILTER BODY, SUIT ARAG 319, 319090.040	1
6	GA5076863	O RING, 136.10 X 3.53, 335000.060	2
	GA5026296	O RING, 136.10 X 3.53, VITON, 335000.060V	2
7	GA2000293	LEVER PLUG, RED, SUIT ARAG 319, 4542233.055	1
GA2000101 GOLDACRES		SUCTION FILTER, 3" 32 MESH, 3" BSP MALE THREADS, VITON ORING, ARAG	REV 00.B

Arag, 330 Series, Pressure Filter

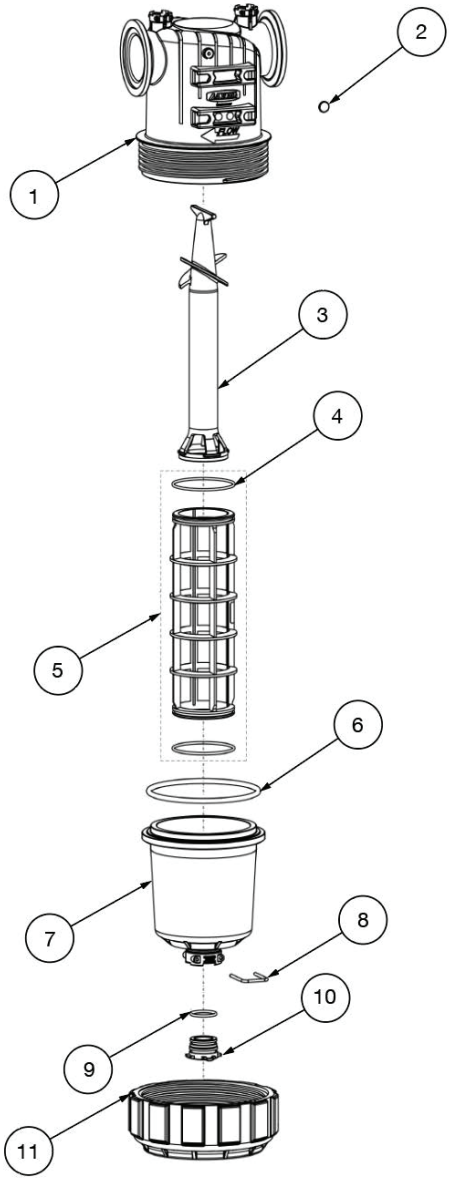

OPTIONAL PARTS			
ITEM	PART NUMBER	DESCRIPTION	QTY
A	GA4525000	SPANNER, ZINC COATED, 2" PRESSURE FILTER, ARAG 3303172V GA2000563	-

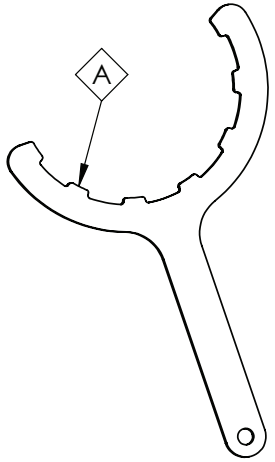

IF DESCRIPTION PREFIX IS ASSEMBLY DRAWING ONLY OR PRODUCTION DRAWING ONLY THE ITEM IS NOT FOR SALE			
ITEM	PART NUMBER	DESCRIPTION	QTY
1	GA2000246	BODY, SUIT PRESSURE FILTER GA2000563, ARAG, 3303070.010	1
2	GA5078771	YELLOW CAP, ARAG, PRESSURE FILTER, 80MM, 31020035.012	1
3	GA2000247	SELF-CLEANING CYLINDER, SUIT PRESSURE FILTER GA2000563, ARAG, 330000.050	1
4	GA2000248	O-RING, FILTER ELEMENT, SUIT PRESSURE FILTER GA2000563, ARAG, 462200.040V	1
5	GA2000347	FILTER ELEMENT, SUIT GA2000563 PRESSURE FILTER, YELLOW, 80 MESH, VITON O RINGS, ARAG	1
6	GA2000249	O-RING, BOWL, SUIT PRESSURE FILTER GA2000563, ARAG, G11100V	1
7	GA2000250	BOWL, SUIT PRESSURE FILTER GA2000563, ARAG, 3300100.020	1
8	GA2000252	FORK D.3, DIST.29, SUIT PRESSURE FILTER GA2000563, ARAG, 010003	1
9	GA2000251	O-RING, BLANK CAP, SUIT PRESSURE FILTER GA2000563, ARAG, G11058V	1
10	GA2000342	PRESSURE FILTER BOWL CAP, ARAG 330, 219130	1
11	GA2000253	LOCK RING, SUIT PRESSURE FILTER GA2000563, ARAG, 330000.040	1
GA2000563 GOLDACRES		PRESSURE FILTER, 2", 80 MESH, ARAG SERIES 330	REV 00

Nozzles - Fenceline, Solenoid Operated, 1”

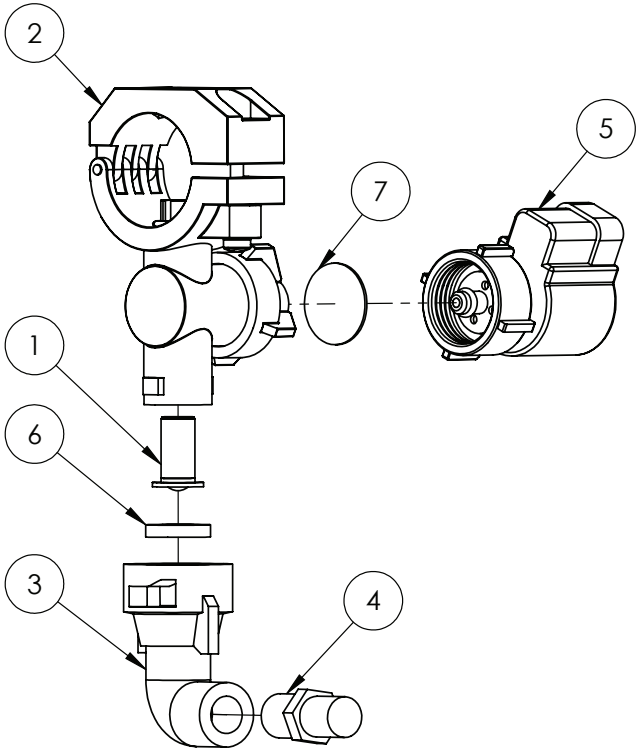

MOUNTING HARDWARE
SUITS 3/4" & 1"

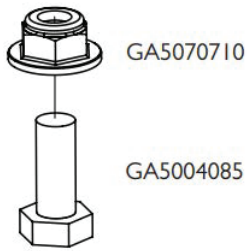

IF DESCRIPTION PREFIX IS ASSEMBLY DRAWING ONLY OR PRODUCTION DRAWING ONLY THE ITEM IS NOT FOR SALE			
ITEM	PART NUMBER	DESCRIPTION	QTY
1	GA5076947	CHECK VALVE & FILTER SCREEN, NOZZLE TIP, 5PSI VALVE, 50 MESH SCREEN, TEEJET	1
2	GA5077962	NOZZLE BODY, SINGLE, 1", TEEJET, QJ17560A-1-NYB	1
3	GA5077986	NOZZLE CAP & WASHER, 90 DEGREE CAP, 1/4" NPT FEMALE OUTLET, TEEJET, QJ4676-90-1/4-NYR	1
4	GA8100339	NOZZLE, FENCE LINE, ORANGE, POLYMER, LEFT SIDE,1/4" NPT, TEEJET, 1/4XP10L	1
5	GA5071785	SOLENOID, E-CHEMSAVER SUIT 2 PIN METRI-PACK, FENCE LINE	1
6	GA5055245	WASHER, NOZZLE CAP SEAL, RUBBER, 19 OD X 9 ID, SUIT TEE JET NOZZLE, REPLACES CP19438-EPR	1
GA7800052 GOLDACRES		FENCLINE ASSY, 1", SOLENOID, E-CHEM, ORANGE, B1/4XP10	REV 00

Nozzles - 1”, Teejet Single Body

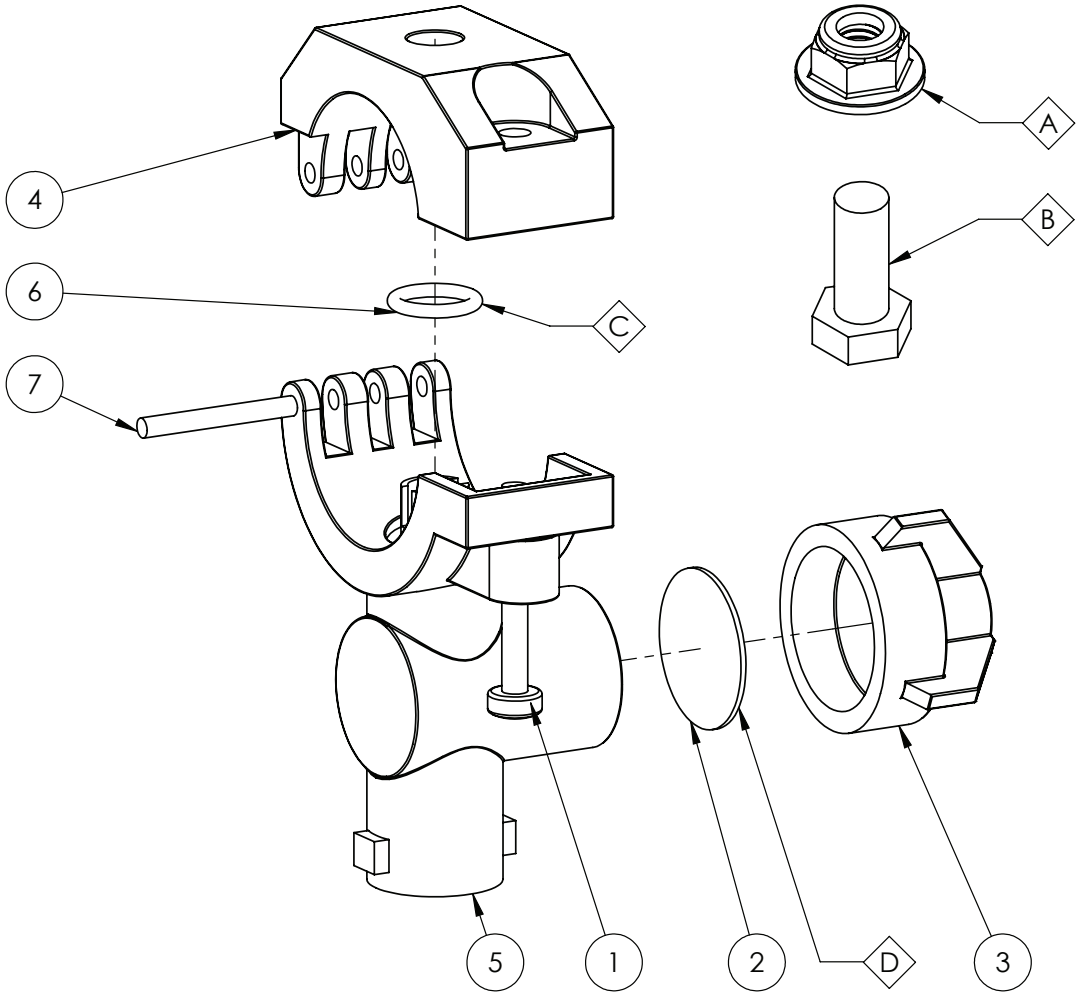

OPTIONAL PARTS			
ITEM	PART NUMBER	DESCRIPTION	QTY
A	GA5070710	NUT FLANGE PLASTIC M8 X 1.25	1
B	GA5052595	BOLT M8 X 20 SS A270	1
C	GA5077597	O-RING, VITON, CP7717-2/110-VI, SUITS QJ7421 SERIES NOZZLE BODIES	1
D	GA5077440	DIPHRAGM, VITON, NOZZLE BODY CHECK VALVE, TEEJET	1

IF DESCRIPTION PREFIX IS ASSEMBLY DRAWING ONLY OR PRODUCTION DRAWING ONLY THE ITEM IS NOT FOR SALE			
ITEM	PART NUMBER	DESCRIPTION	QTY
1	GA5049020	BOLT PAN HEAD M4 X 25 SS	1
2	GA5077439	CHEMSAVER, DIAPHRAGM, CP21953-EPR, TEEJET	1
3	GA5076670	CHEMSAVER, 10PSI, BLACK, TEEJET, 21950-10-NYB	1
4	GA5077533	NOZZLE BODY CLAMP, UPPER, 1, TEEJET, CP48222-NYB	1
5	GA5077962	NOZZLE BODY, SINGLE, 1, TEEJET, QJ17560A-1-NYB	1
6	GA5077596	O RING, 14.5 X 2.5, BUNA, CP7717-2/110-BU, SUITS QJ7421 SERIES NOZZLE BODIES.	1
7	GA5077537	PIN, NOZZLE BODY CLAMP, TEEJET, CP48256-SS	1
GA5077988 GOLDACRES		NOZZLE BODY, SINGLE, 1", TEEJET, QJ17560A-1-NYB	REV 00

NCV Control Nozzle - Hawkeye 2

REPLACEMENT PARTS			
ITEM	PART NUMBER	DESCRIPTION	QTY
A	GA3000525	NCV REPAIR SERVICE KIT, INDIVIDUAL, HAWKEYE 2, SUIT TEEJET, RAVEN, 11172005060	-
B	GA3000528	O-RING, 38 PACK, VITON BLACK SIZE -116, SUIT HAWKEYE 2 NCV, TEEJET TURRET, 12192005116M	-
C	GA3000529	O-RING, 38 PACK, VITON PURPLE SIZE -115, SUIT HAWKEYE 2 NCV, TEEJET TURRET, 12192005115M	-
-	GA3000530	NCV PLUNGERS AND SEALS HAWKEYE 2, 100 KIT, VITON, BLACK 11172005064	-
-	GA3000531	NCV SEVERE DUTY PLUNGERS AND SEALS HAWKEYE 2, 100 KIT, VITON EXTREME, YELLOW, 11171005216	-

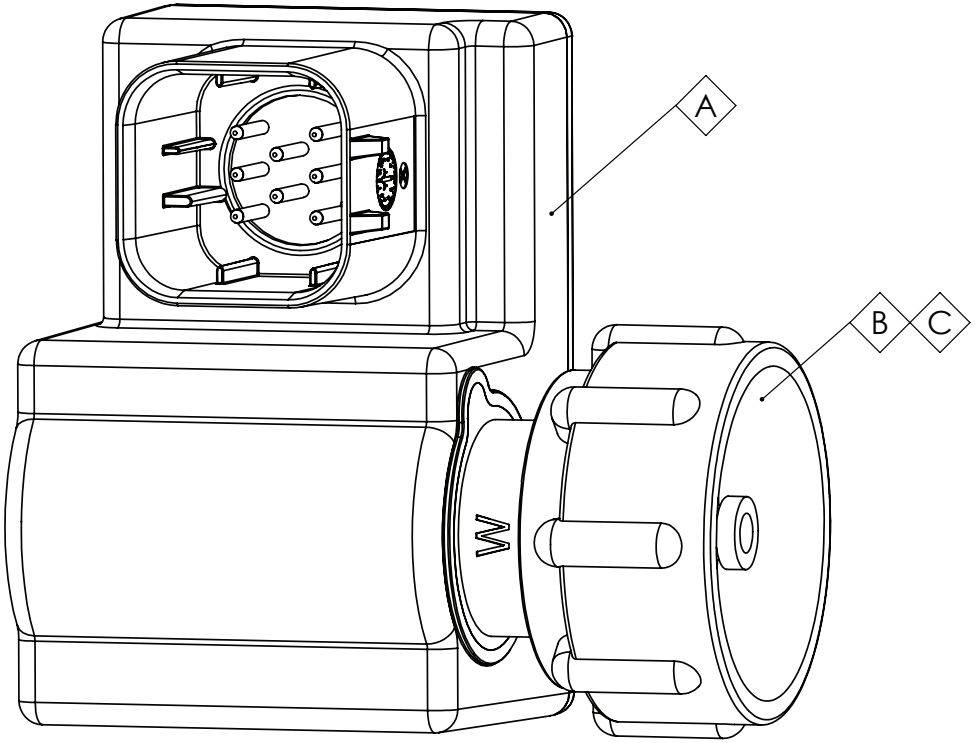

GA3000511 GOLDACRES	NCV, NOZZLE CONTROL VALVE, PWM, HAWKEYE 2, SUIT TEEJET, RAVEN 063-2005-001	REV 00.B

Nozzles - Teejet Clock Face Body

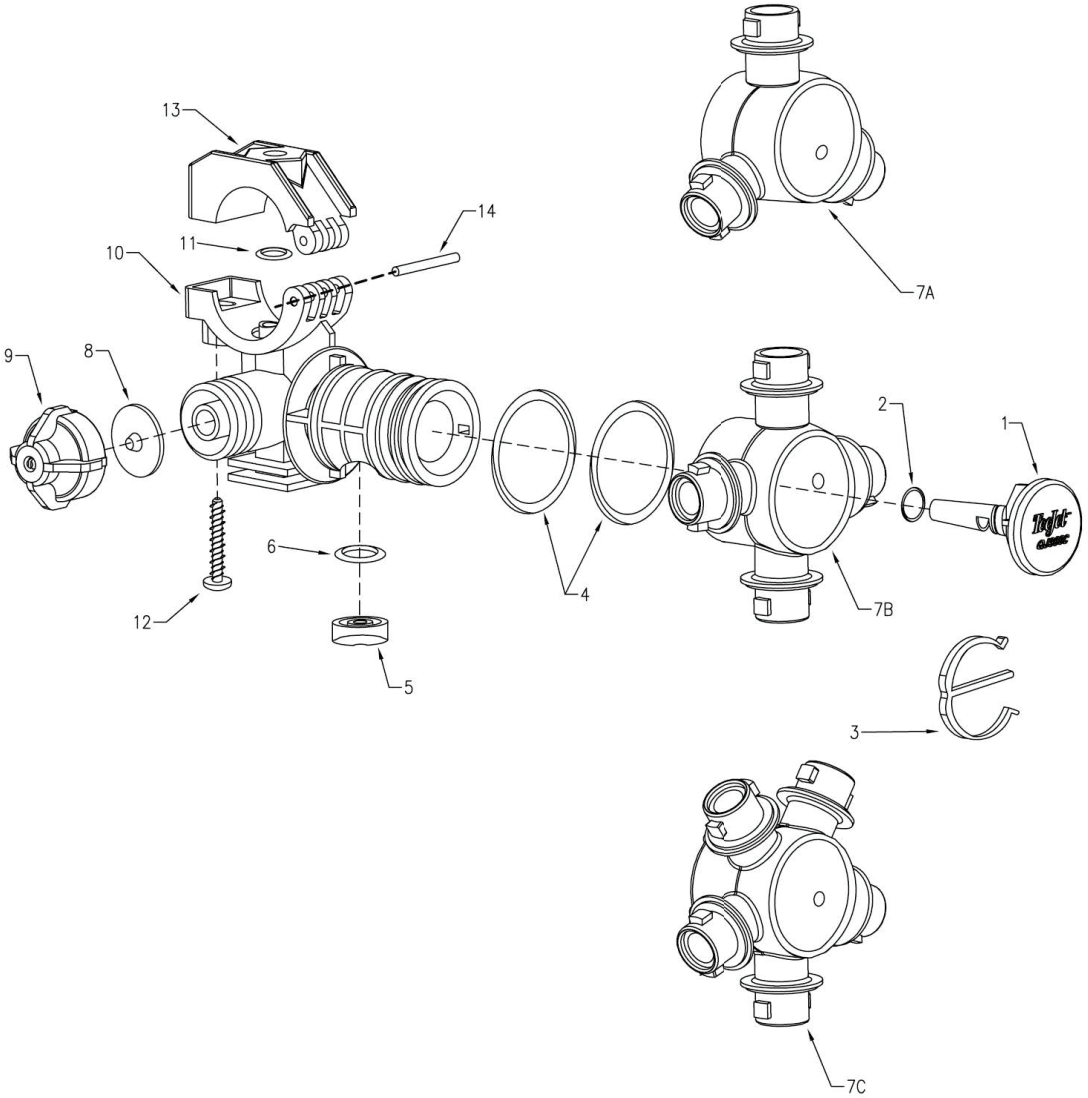

IF DESCRIPTION PREFIX IS ASSEMBLY DRAWING ONLY OR PRODUCTION DRAWING ONLY THE ITEM IS NOT FOR SALE			
ITEM	PART NUMBER	DESCRIPTION	QTY
1	GA5074440	PLUG, NYLON, TEEJET, SUIT, CLOCKFACE, CP38930-8-NYB	1
2	GA5074435	O-RING, TEEJET, CLOCKFACE, EPDM, CP7717-2-13-EPR	1
-	GA5074455	O-RING, TEEJET, CLOCKFACE, VITON, CP7717-2-13-VI	-
3	GA5077496	E CLIP, NOZZLE BODY, TEEJET, CP38931-NYB	1
4	GA5077609	O'RING, CP7717-M28X3-EPRTFE	2
-	GA5077609	O'RING, CP7717-M28X3-EPRTFE	-
5	GA5077557	QJ360 SEAL F/CF&E, CP56726-VITFE	1
6	GA5077605	O RING VITON, CP7717-2-111-VI	1
7A	GA5077491	NOZZLE BODY TURRET, 3 OUTLET CLOCK FACE STYLE, TEEJET, CP38921-2-NYB	1
7B	GA5074445	NOZZLE BODY TURRET, 4 OUTLET CLOCK FACE STYLE TEEJET, CP38922-2-NYB	-
7C	GA5074450	NOZZLE BODY TURRET, 5 OUTLET CLOCK FACE STYLE, CP38923-2-NYB	-
8	GA5077439	CHEMSAVER, DIAPHRAGM, CP21953-EPR, TEEJET	1
-	GA5077440	DIAPHRAGM, VITON, NOZZLE BODY CHECK VALVE, TEEJET	-
9	GA5076670	CHEMSAVER, 10PSI, BLACK, TEEJET, 21950-10-NYB	1
10	GA5077501	1/2 BODY FOR 360C, CP38942-2-NYB	1
-	GA5077493	3/4 360C BODY NYLON, CP38925-2-NYB	-
-	GA5077494	BODY, 360 SERIES 1", TEEJET, CP38926-2-NYB	-
11	GA5077605	O RING VITON, CP7717-2-111-VI	1
12	GA5077536	SCREW, SUIT TEEJET NOZZLE BODIES QJ360 AND QJ17560, 1-1/4 LONG, SS, CP48255-11/4-302SS	1
13	GA5077534	1/2 UPPER CLAMP, CP48223-NYB	1
-	GA5077532	CLAMP, NOZZLE BODY, 3/4, TEEJET, CP48221-NYB	-
-	GA5077533	NOZZLE BODY CLAMP, UPPER, 1, TEEJET, CP48222-NYB	-
-	GA5077535	25MM UPPER CLAMP, CP48224-NYB	-
14	GA5077537	PIN, NOZZLE BODY CLAMP, TEEJET, CP48256-SS	1
GA5077970 GOLDACRES		NOZZLE BODY, TRIPLE, TRIJET, CLOCK FACE, 1", TEEJET, QJ363C-1-NYB	REV 00

Nozzle Body, Clamp, 1” Altek

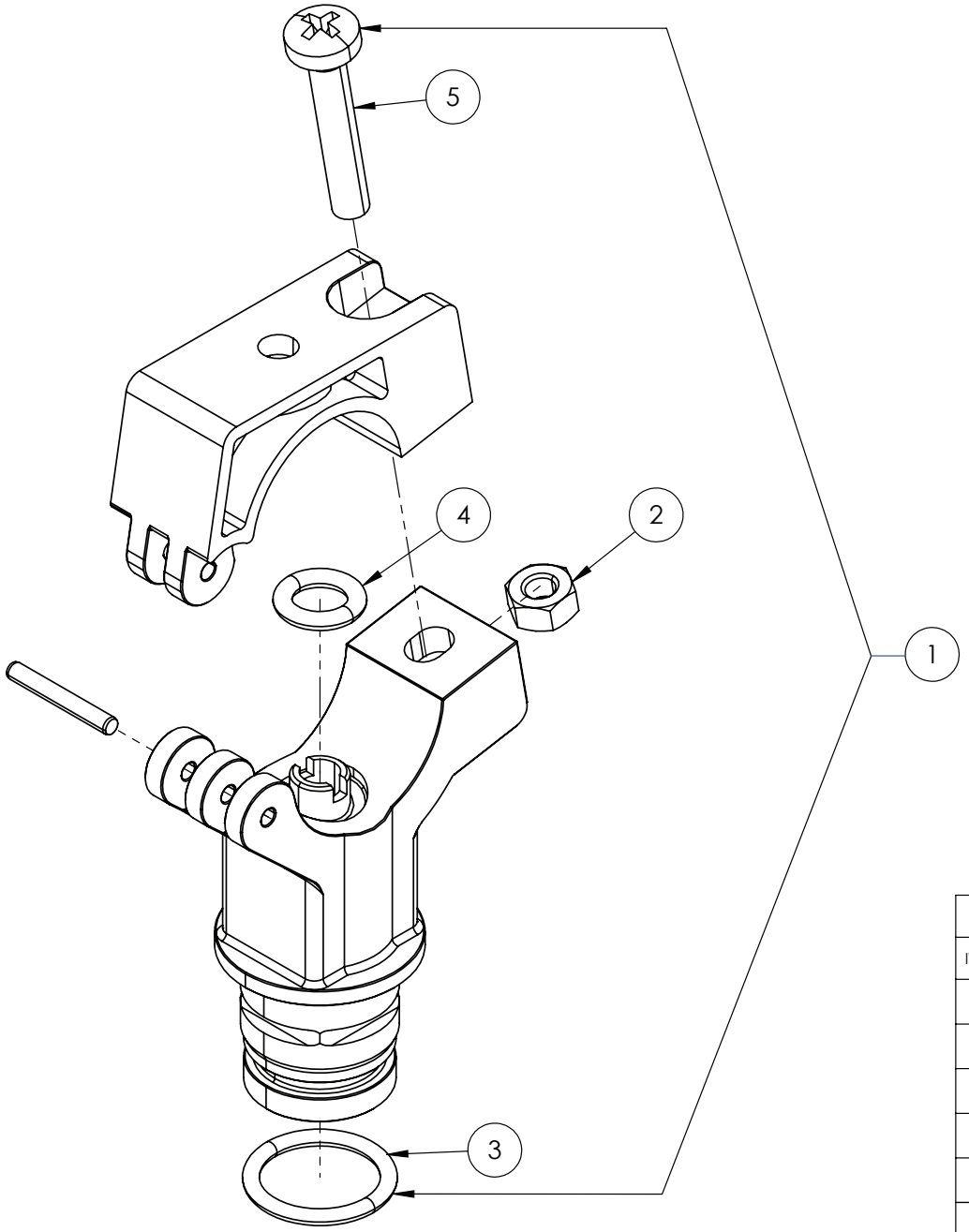

1" BOOM POLY VERSION

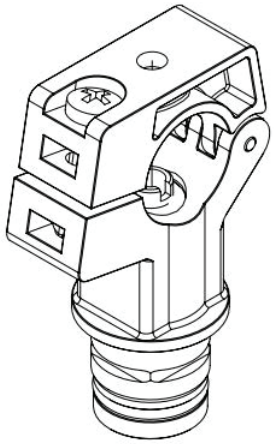

GA2000133

IF DESCRIPTION PREFIX IS ASSEMBLY DRAWING ONLY OR PRODUCTION DRAWING ONLY THE ITEM IS NOT FOR SALE			
ITEM	PART NUMBER	DESCRIPTION	QTY
1	GA2000133	CLAMP, DUAL NOZZLE BODY, SUIT 1" BOOM POLY, INCLUDES SCREW, NUT AND O RING, ALTEK	-
2	GA5004427	NUT M6 SS	1
3	GA5025245	O-RING, 19 X 2.65 mm FPM80, NOZZLE BODY CLAMP 3/4", ALTEK, 82302	1
4	GA5025240	O-RING, 9.5 X 3 mm EPDM, NOZZLE BODY CLAMP 3/4", ALTEK, 47925	
5	GA5025235	SCREW, M6, NOZZLE BODY CLAMP, ALTEK, 82491	1
GA2000133 GOLDACRES		CLAMP, DUAL NOZZLE BODY, SUIT 1" BOOM POLY, INCLUDES SCREW, NUT AND O RING, ALTEK	REV 00

Nozzles, Altek Dual Spray Body

REPLACEMENT PARTS			
ITEM	PART NUMBER	DESCRIPTION	QTY
-	GA8100664	NOZZLE BODY, TWIN / DUAL, AIR SHUT OFF, 1", SLAVE, ALTEK 82063	-

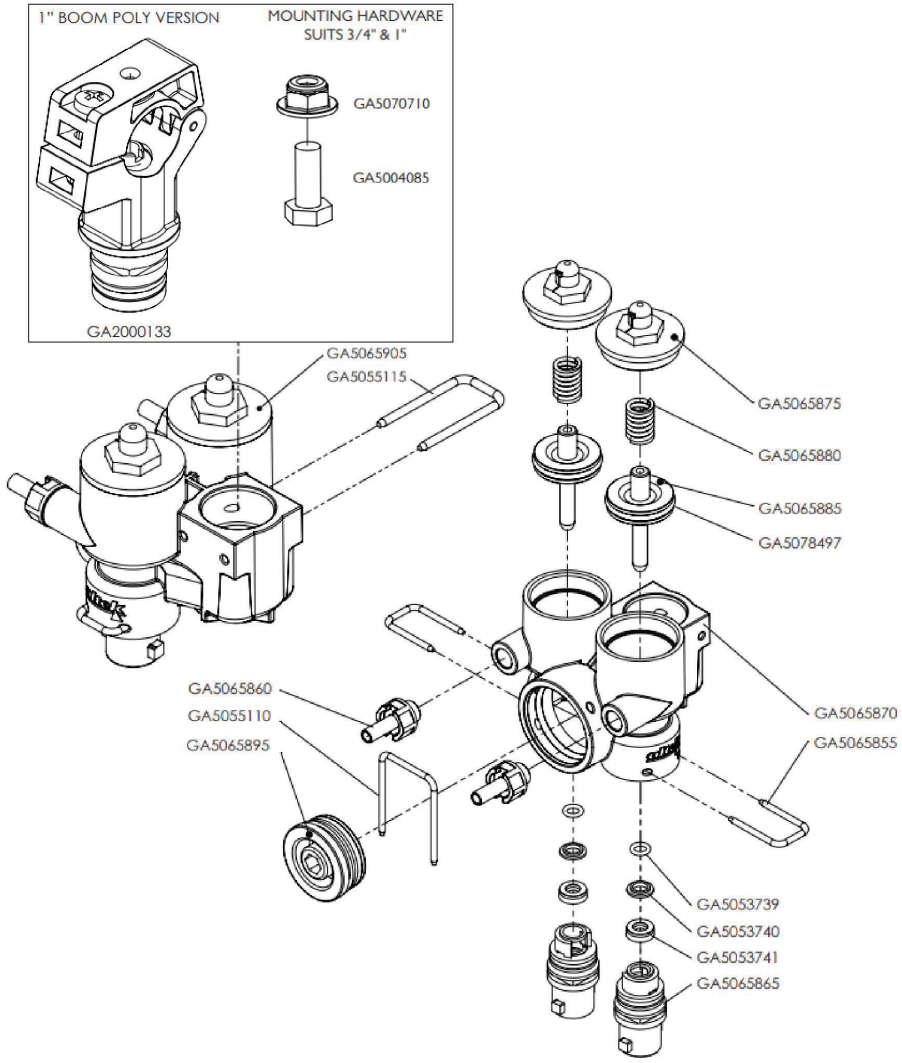

ASSEMBLY DRAWING ONLY ASSEMBLY ON FOLLOWING PAGES			
ITEM	PART NUMBER	DESCRIPTION	QTY
-	GA5070710	NUT FLANGE PLASTIC M8 X 1.25	1
-	GA5004085	BOLT M8 X 20 GR8.8 ZP	1
-	GA2000133	CLAMP, DUAL NOZZLE BODY, SUIT 1" BOOM POLY, INCLUDES SCREW, NUT AND O RING, ALTEK	1
-	GA5065905	LOWER BODY, MULTI SPRAY, ALTEK	1
-	GA5055115	U CLIP, 20 X 40 X 3 mm, 82297, SUIT ALTEK NOZZLE BODY GA5065845	1
-	GA5065875	TOP CAP, 82538, SUIT ALTEK NOZZLE BODY	2
-	GA5065880	SPRING, 47902, SUIT ALTEK NOZZLE BODY	2
-	GA5065885	PLUNGER, 82537, SUIT ALTEK NOZZLE BODY	2
-	GA5078497	O RING, 23.5 X 2.6 mm, FPM80	-
-	GA5065870	OUTER BODY HOUSING, 82418, SUIT ALTEK TWIN NOZZLE BODY	1
-	GA5065855	U-CLIP, 21931, SUIT ALTEK NOZZLE BODY	2
-	GA5065865	OUTLET, VALVE INNER, NOZZLE BODY, ALTEK, 82532	2
-	GA5065860	HOSE BARB, AIR FITTING, 6mm HOSE X MALE THREAD, 82572, SUIT ALTEK NOZZLE BODY, INCLUDES SEAL	2
-	GA5055110	U CLIP 30 X 41 X 2.5 mm, 82298, TO SUIT GA5065845	1
-	GA5065895	SHUTOFF PLUG SUIT ALTEK NOZZLE BODY, 82539	1
-	GA5053739	O RING, 5.6 X 1.8 FPM, SUIT GA5065845, ALTEK	2
-	GA5053740	RETAINING DISK, 11.8 X 6.8 X 2, SUIT GA5065845, ALTEK	2
-	GA5053741	LIP SEAL, 6 X 12 X 4.2 FPM, SUIT GA5065845, ALTEK	4
GA8100664 GOLDACRES		NOZZLE BODY, TWIN / DUAL, AIR SHUT OFF, 1", SLAVE, ALTEK 82063	REV 00

Nozzles, Altek Spray Stop, 4mm

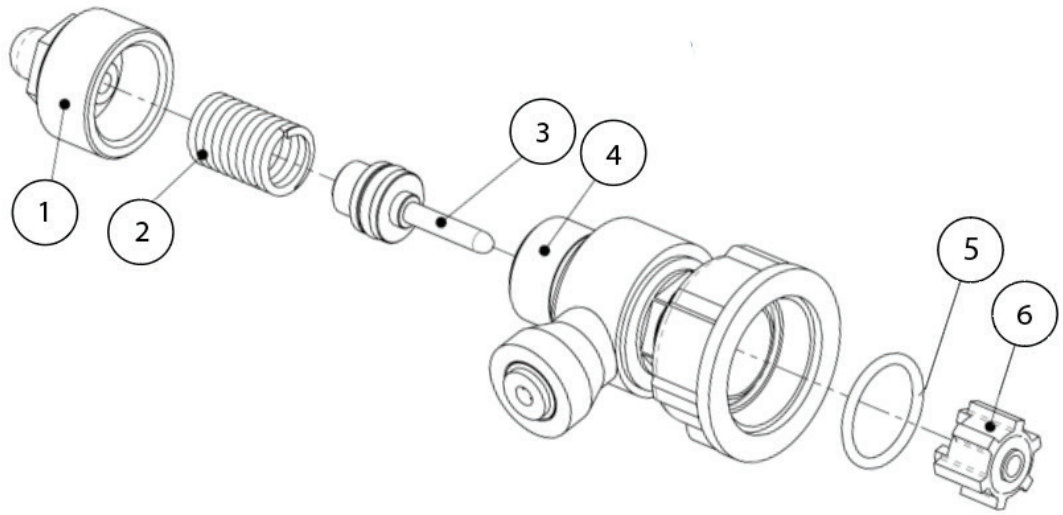

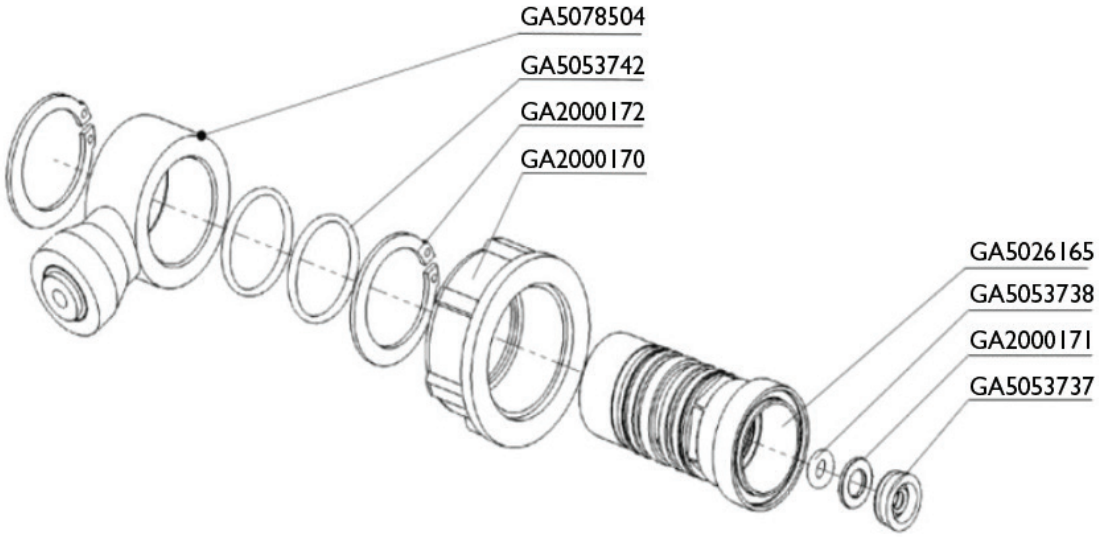

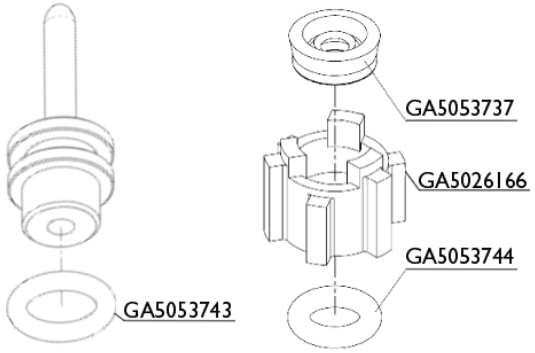

IF DESCRIPTION PREFIX IS ASSEMBLY DRAWING ONLY OR PRODUCTION DRAWING ONLY THE ITEM IS NOT FOR SALE			
ITEM	PART NUMBER	DESCRIPTION	QTY
1	GA5053731	END CAP WITH BREATHER, SUIT GA5065520 SPRAY STOP, ALTEK	1
2	GA5053732	SPRING, 10 BAR, SUIT GA5065520 GA5065525, SPRAY STOP, ALTEK	1
3	GA5053733	PISTON, SUIT GA5065520 SPRAY STOP, ALTEK	1
4	GA2000167	SPRAY STOP BODY, PUSH IN TYPE, ALTEK, 83051	1
5	GA5053735	ORING EXTERNAL, SUIT GA5065520 SPRAY STOP, ALTEK	1
6	GA5053736	PLUNGER, SUIT GA5065520 GA5065523 GA5065525 SPRAY STOP, ALTEK	1
-	GA5078504	CONNECTOR RING, SPRAY STOP, 4mm VERSION, ALTEK, 83773, 85250	1
-	GA5053742	O RING, 16 X 1.5, SUIT GA5065520 SPRAY STOP, ALTEK	1
-	GA2000172	CIRCLIP, SPRAY STOP, ALTEK, 81376	1
-	GA2000170	FLY NUT, SPRAY STOP, ALTEK, 80924	1
-	GA5026165	BODY, AIRFEED, ALTEK, 81373	1
-	GA5053738	O RING, 3.68 X 1.78 FPM 75, SUIT GA5065520 SPRAY STOP, ALTEK	1
-	GA2000171	RIVET SLICE, SPRAY STOP, ALTEK, 41162	1
-	GA5053737	NUT RING, 4 X 10 X 4.2 FPM SUIT GA5065520 SPRAY STOP, ALTEK	1
-	GA5053743	O RING, 9 X 2.5, SUIT GA5065520 SPRAY STOP, ALTEK	1
-	GA5026166	NUT, PLUNGER, NUT ONLY, ALTEK, 80926	1
-	GA5053744	O RING, 6.02 X 2.62, SUIT GA5065520 SPRAY STOP, ALTEK	1
GA5065523 GOLDACRES		SPRAY STOP, 4mm, RAPIDFIRE, SUIT TEEJET NOZZLE BODY, ALTEK	REV 00

Nozzles, Altek Spray Stop, 6mm, Suit, TeeJet Nozzle Body

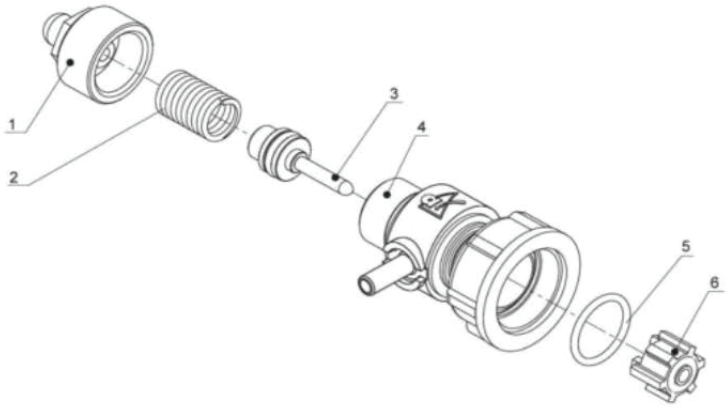

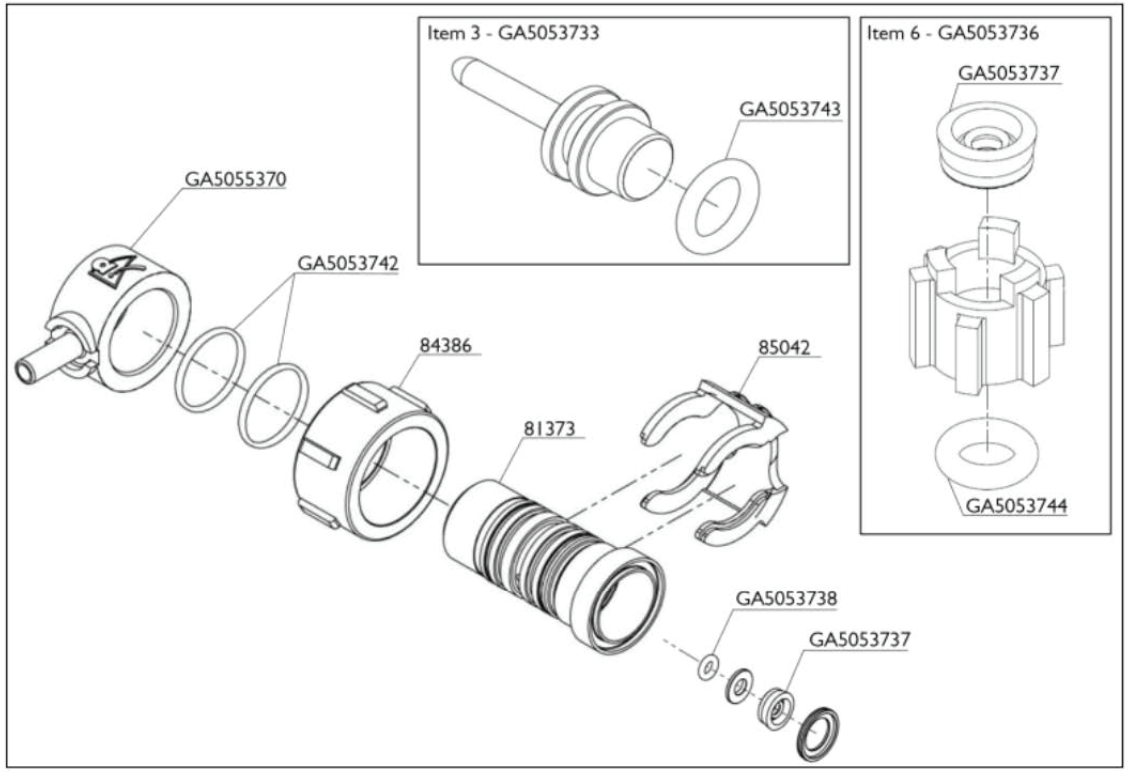

IF DESCRIPTION PREFIX IS ASSEMBLY DRAWING ONLY OR PRODUCTION DRAWING ONLY THE ITEM IS NOT FOR SALE			
ITEM	PART NUMBER	DESCRIPTION	QTY
-	GA5065520	SPRAY STOP, 6mm, RAPIDFIRE, SUIT TEEJET NOZZLE BODY, ALTEK	-
1	GA5053731	END CAP WITH BREATHER, SUIT GA5065520 SPRAY STOP, ALTEK	-
2	GA5053732	SPRING, 10 BAR, SUIT GA5065520 GA5065525, SPRAY STOP, ALTEK	1
3	GA5053733	PISTON, SUIT GA5065520 SPRAY STOP, ALTEK	1
4	GA5053734	VALVE BODY, SUIT GA5065520 SPRAY STOP, ALTEK	1
5	GA5053735	ORING EXTERNAL, SUIT GA5065520 SPRAY STOP, ALTEK	1
6	GA5053736	PLUNGER, SUIT GA5065520 GA5065523 GA5065525 SPRAY STOP, ALTEK	1
-	GA5053737	NUT RING, 4 X 10 X 4.2 FPM SUIT GA5065520 SPRAY STOP, ALTEK	1
-	GA5053738	O RING, 3.68 X 1.78 FPM 75, SUIT GA5065520 SPRAY STOP, ALTEK	1
-	GA5053742	O RING, 16 X 1.5, SUIT GA5065520 SPRAY STOP, ALTEK	1
-	GA5053743	O RING, 9 X 2.5, SUIT GA5065520 SPRAY STOP, ALTEK	1
-	GA5053744	O RING, 6.02 X 2.62, SUIT GA5065520 SPRAY STOP, ALTEK	1
-	GA5055370	NIPPLE, 6mm, SUIT GA5065520, SPRAY STOP BODY, RAPID FIRE, ALTEK	1
GA5065520 GOLDACRES		SPRAY STOP, 6mm, RAPIDFIRE, SUIT TEEJET NOZZLE BODY, ALTEK	REV 00

Nozzles, Altek Spray Stop, 6mm in 4mm Out

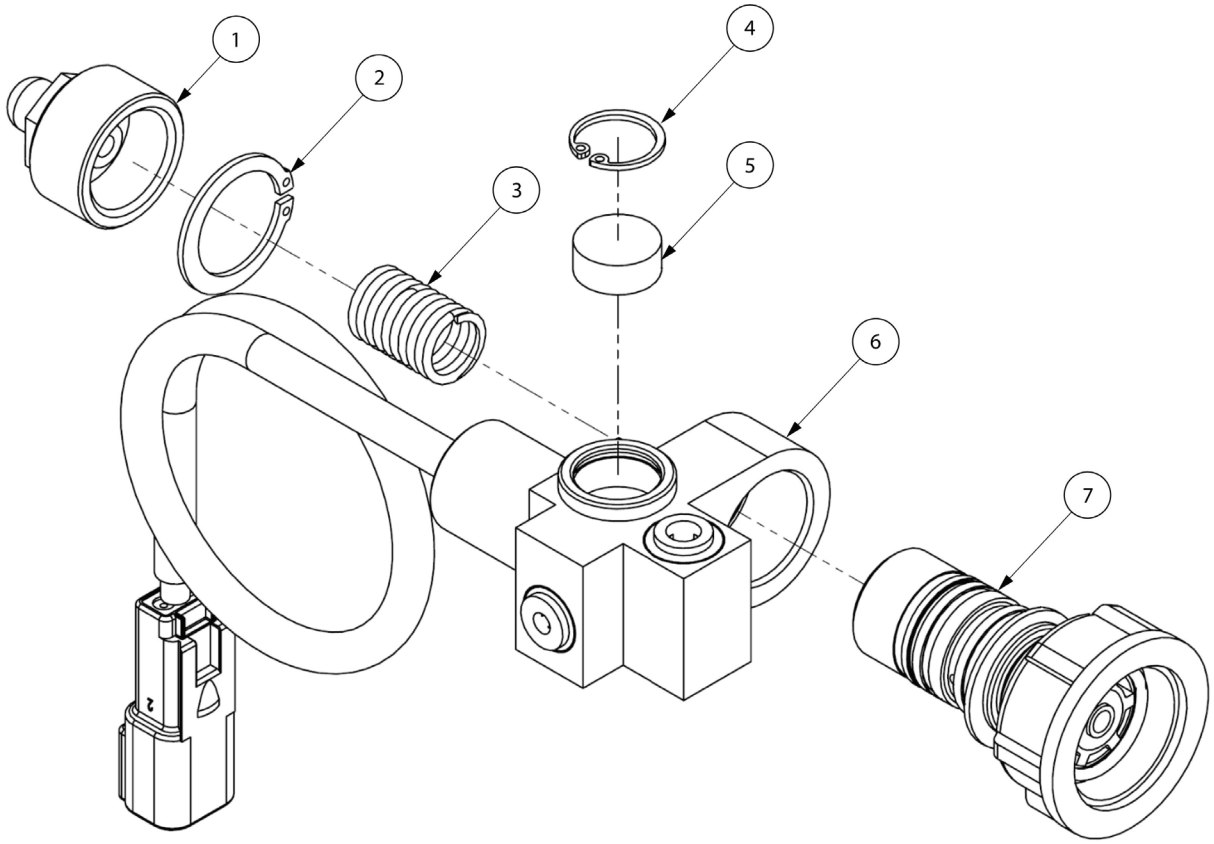

ASSEMBLY DRAWING ONLY ASSEMBLY ON FOLLOWING PAGES			
ITEM	PART NUMBER	DESCRIPTION	QTY
1	GA5053731	END CAP WITH BREATHER, SUIT GA5065520 SPRAY STOP, ALTEK	1
2	GA2000172	CIRCLIP, SPRAY STOP, ALTEK, 21x1.2 DIN-471	1
3	GA5053732	SPRING, 10 BAR, SUIT GA5065520 GA5065525, SPRAY STOP, ALTEK	1
4	GA5026167	CIRCLIP, SUIT, SPRAY STOP, ALTEK	1
5	GA5026168	PLUNGER, BODY, DIRECT CONTROL NOZZLE BODY, ALTEK, SUIT, GA5065525	1
6	GA5026169	BODY, DIRECT CONTROL, MASTER, ALTEK, SUIT, GA5065525	1
7	GA5078810	CARTRIDGE, SPRAY-STOP, ALTEK	1
GA5065525 GOLDACRES		SPRAY STOP, SOLENOID DIRECT CONTROL, RAPIDFIRE, 6mm IN, 4mm OUT, ALTEK,WITH DEUSTCH PLUG	REV 00

Nozzles, Direct Control, Dual, Altek

REPLACEMENT PARTS			
ITEM	PART NUMBER	DESCRIPTION	QTY
-	GA8100663	NOZZLE BODY, TWIN DUAL, AIR SHUT OFF, 1", MASTER, ALTEK 84743	-

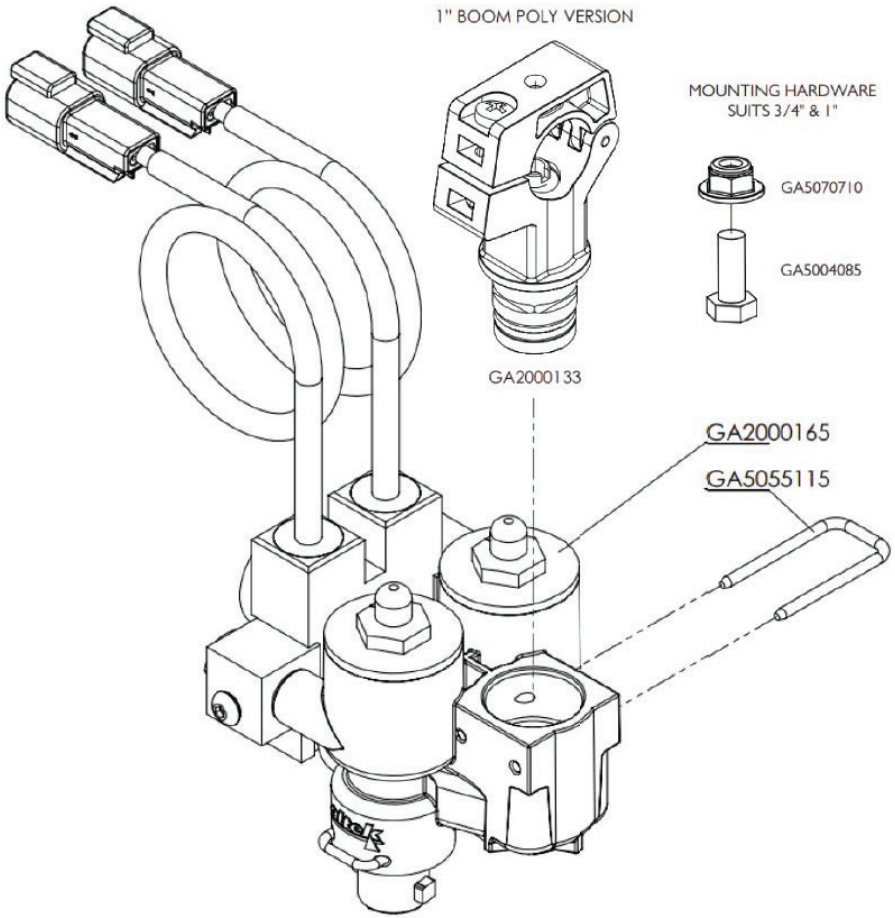

IF DESCRIPTION PREFIX IS ASSEMBLY DRAWING ONLY OR PRODUCTION DRAWING ONLY THE ITEM IS NOT FOR SALE			
ITEM	PART NUMBER	DESCRIPTION	QTY
-	GA5070710	NUT FLANGE PLASTIC M8 X 1.25	1
-	GA5004085	BOLT M8 X 20 GR8.8 ZP	1
-	GA2000133	CLAMP, DUAL NOZZLE BODY, SUIT 1" BOOM POLY, INCLUDES SCREW, NUT AND O RING, ALTEK	1
-	GA2000165	DUAL NOZZLE BODY ASSEMBLY, DIRECT CONTROL, ALTEK, 84188	1
-	GA5055115	U CLIP, 20 X 40 X 3 mm, 82297, SUIT ALTEK NOZZLE BODY GA5065845	1
GA8100663 GOLDACRES		NOZZLE BODY, TWIN / DUAL, AIR SHUT OFF, 1", MASTER, ALTEK 84743	REV 00

Nozzles, Direct Control, Dual Assembly

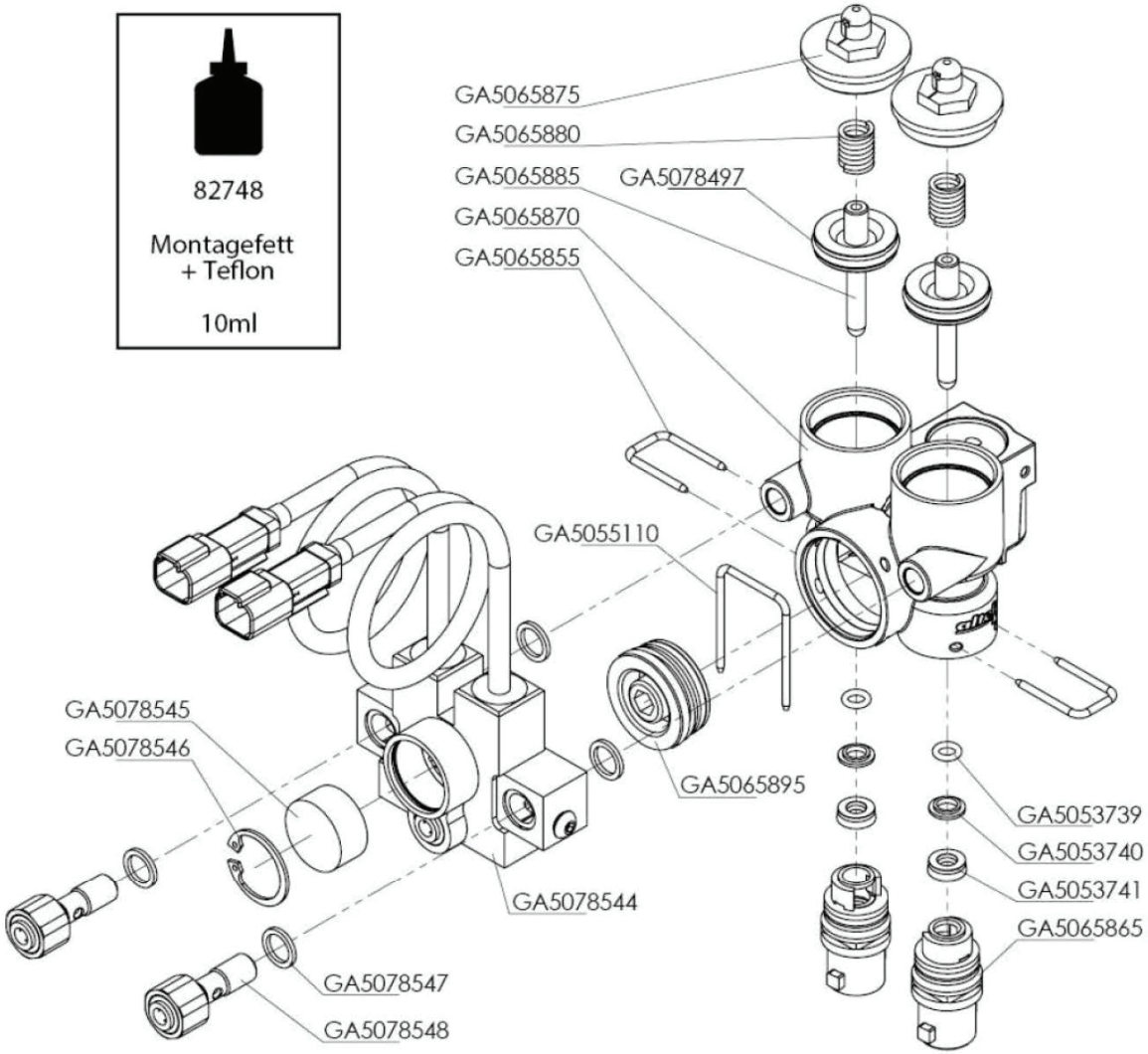

IF DESCRIPTION PREFIX IS ASSEMBLY DRAWING ONLY OR PRODUCTION DRAWING ONLY THE ITEM IS NOT FOR SALE			
ITEM	PART NUMBER	DESCRIPTION	QTY
-	GA5078544	DUAL SOLENOID VALVE, INCLUDING 200mm CABLES & DEUTSCH CONNECTORS, ALTEK, 84187	1
-	GA5065870	OUTER BODY HOUSING, 82418, SUIT ALTEK TWIN NOZZLE BODY	1
-	GA5053739	O RING, 5.6 X 1.8 FPM, SUIT GA5065845, ALTEK	2
-	GA5053740	RETAINING DISK, 11.8 X 6.8 X 2, SUIT GA5065845, ALTEK	2
-	GA5053741	LIP SEAL, 6 X 12 X 4.2 FPM, SUIT GA5065845, ALTEK	2
-	GA5065865	OUTLET, VALVE INNER, NOZZLE BODY, ALTEK, 82532	2
-	GA5065855	U-CLIP, 21931, SUIT ALTEK NOZZLE BODY	2
-	GA5065885	PLUNGER, 82537, SUIT ALTEK NOZZLE BODY	2
-	GA5078497	O RING, 23.5 X 2.6 mm, FPM80	-
-	GA5065880	SPRING, 47902, SUIT ALTEK NOZZLE BODY	2
-	GA5065875	TOP CAP, 82538, SUIT ALTEK NOZZLE BODY	2
-	GA5065895	SHUTOFF PLUG SUIT ALTEK NOZZLE BODY, 82539	1
-	GA5055110	U CLIP 30 X 41 X 2.5 mm, 82298, TO SUIT GA5065845	1
-	GA5078547	SEAL, WHITE PVC, DUAL SOLENOID VALVE, ALTEK, 83172	4
-	GA5078545	BREATHER INSERT, 25.5 X 12 X 12 mm, DUAL SOLENOID VALVE, ALTEK, 84081	1
-	GA5078546	CIRCLIP, 26 X1.2 mm, DUAL SOLENOID VALVE, ALTEK, 84078	1
-	GA5078548	PUSH FITTING, AIR LINE, 6mm, DUAL SOLENOID VALVE, ALTEK, 83733	2
GA5078544 GOLDACRES		DUAL SOLENOID VALVE, INCLUDING 200mm CABLES & DEUTSCH CONNECTORS, ALTEK, 84187	REV 00

Boom Plumbing, 24mt, Broadacre

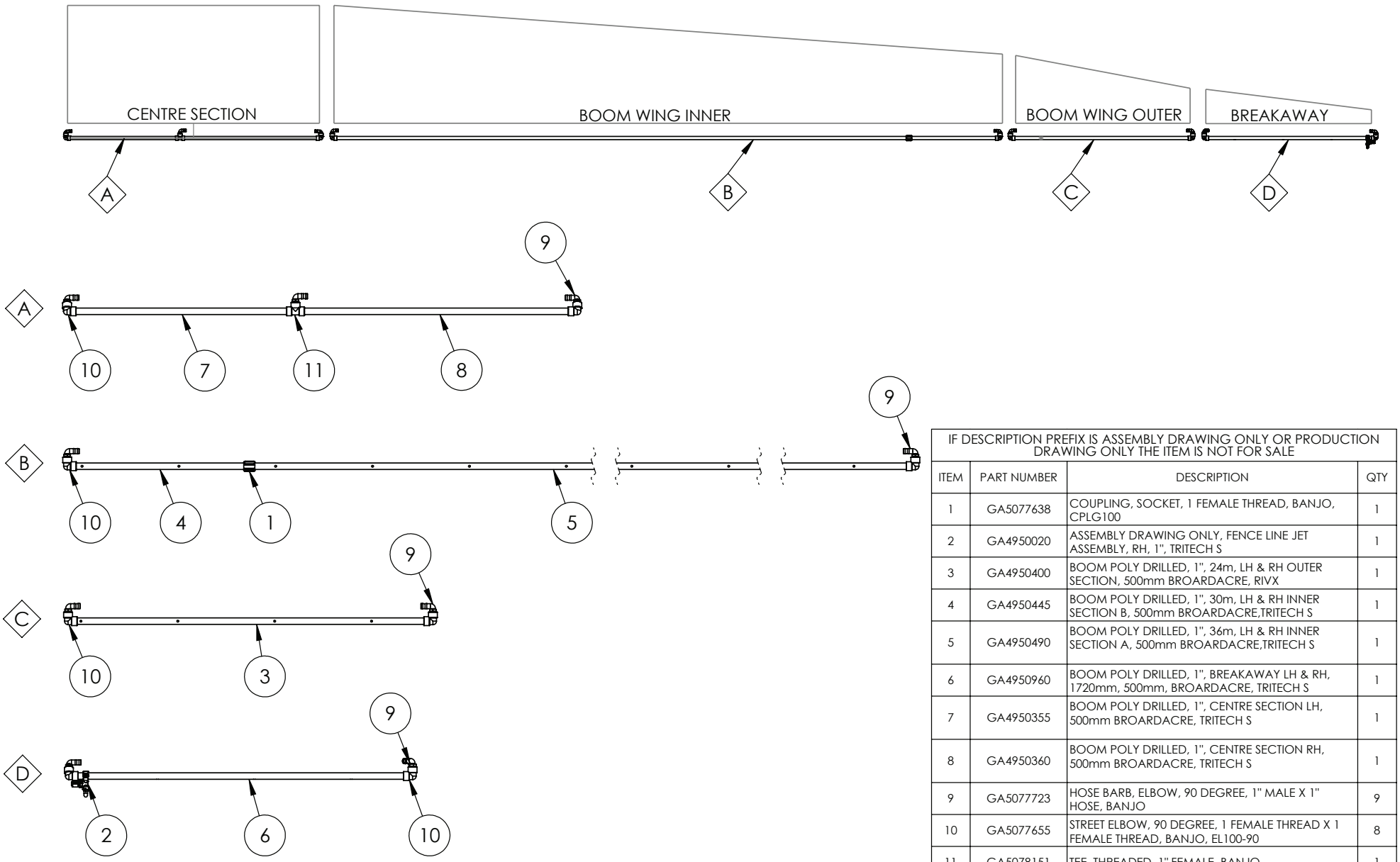

24MT, TRITECH RIVX, 500mm BROADACRE

IF DESCRIPTION PREFIX IS ASSEMBLY DRAWING ONLY OR PRODUCTION DRAWING ONLY THE ITEM IS NOT FOR SALE

ITEM	PART NUMBER	DESCRIPTION	QTY
1	GA5077638	COUPLING, SOCKET, 1 FEMALE THREAD, BANJO, CPLG100	1
2	GA4950020	ASSEMBLY DRAWING ONLY, FENCE LINE JET ASSEMBLY, RH, 1", TRITECH S	1
3	GA4950400	BOOM POLY DRILLED, 1", 24m, LH & RH OUTER SECTION, 500mm BROARDACRE, RIVX	1
4	GA4950445	BOOM POLY DRILLED, 1", 30m, LH & RH INNER SECTION B, 500mm BROARDACRE,TRITECH S	1
5	GA4950490	BOOM POLY DRILLED, 1", 36m, LH & RH INNER SECTION A, 500mm BROARDACRE,TRITECH S	1
6	GA4950960	BOOM POLY DRILLED, 1", BREAKAWAY LH & RH, 1720mm, 500mm, BROARDACRE, TRITECH S	1
7	GA4950355	BOOM POLY DRILLED, 1", CENTRE SECTION LH, 500mm BROARDACRE, TRITECH S	1
8	GA4950360	BOOM POLY DRILLED, 1", CENTRE SECTION RH, 500mm BROARDACRE, TRITECH S	1
9	GA5077723	HOSE BARB, ELBOW, 90 DEGREE, 1" MALE X 1" HOSE, BANJO	9
10	GA5077655	STREET ELBOW, 90 DEGREE, 1 FEMALE THREAD X 1 FEMALE THREAD, BANJO, EL100-90	8
11	GA5078151	TEE, THREADED, 1" FEMALE, BANJO	1
GA7800067 GOLDACRES		LAYOUT, BOOM SECTION PLUMBING, 16 SECTION, 24M, 500mm BROARDACRE, RIVX	REV 00

Boom Plumbing, 24mt, Rowcrop

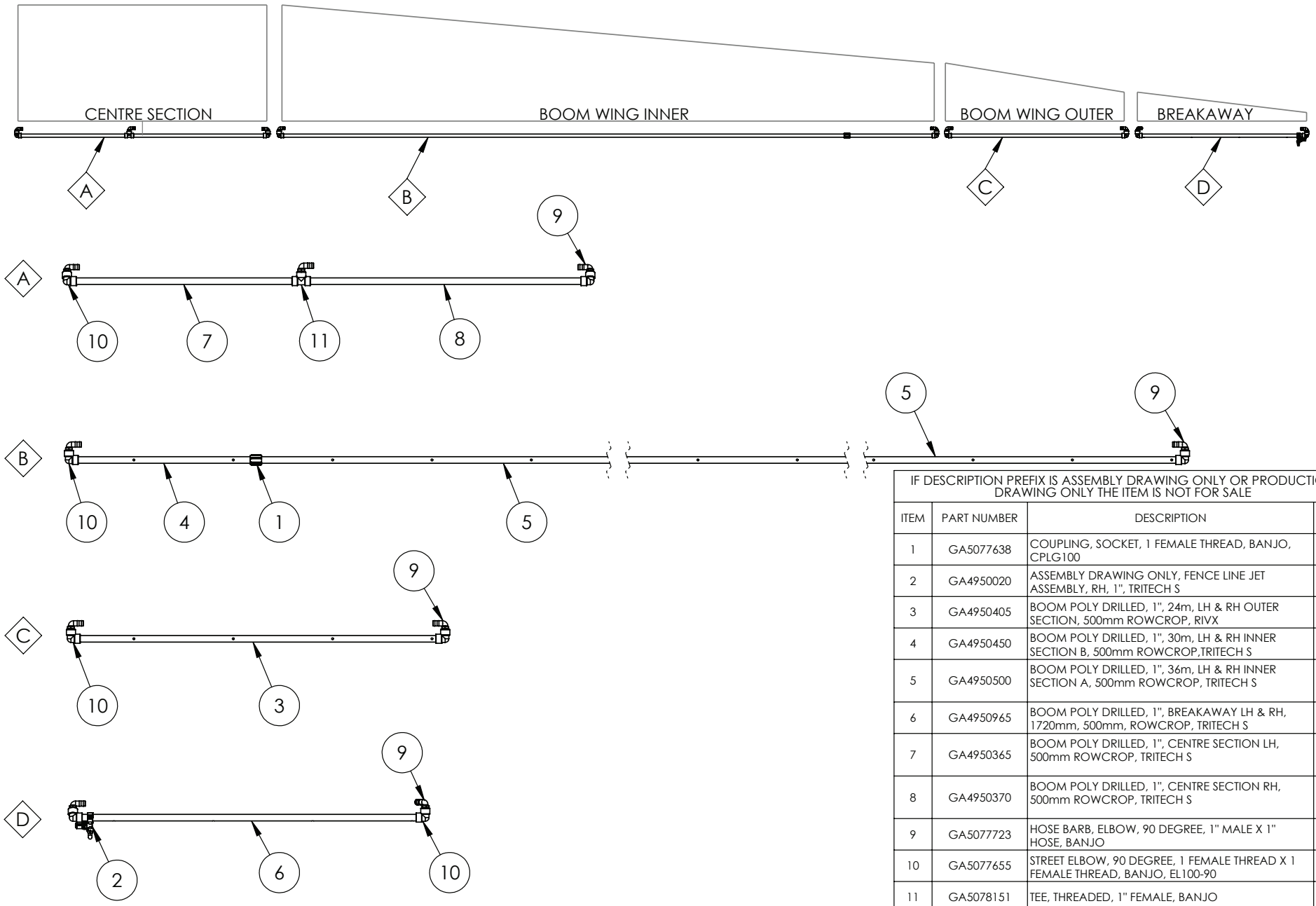

IF DESCRIPTION PREFIX IS ASSEMBLY DRAWING ONLY OR PRODUCTION DRAWING ONLY THE ITEM IS NOT FOR SALE			
ITEM	PART NUMBER	DESCRIPTION	QTY
1	GA5077638	COUPLING, SOCKET, 1 FEMALE THREAD, BANJO, CPLG100	1
2	GA4950020	ASSEMBLY DRAWING ONLY, FENCE LINE JET ASSEMBLY, RH, 1", TRITECH S	1
3	GA4950405	BOOM POLY DRILLED, 1", 24m, LH & RH OUTER SECTION, 500mm ROWCROP, RIVX	1
4	GA4950450	BOOM POLY DRILLED, 1", 30m, LH & RH INNER SECTION B, 500mm ROWCROP,TRITECH S	1
5	GA4950500	BOOM POLY DRILLED, 1", 36m, LH & RH INNER SECTION A, 500mm ROWCROP, TRITECH S	1
6	GA4950965	BOOM POLY DRILLED, 1", BREAKAWAY LH & RH, 1720mm, 500mm, ROWCROP, TRITECH S	1
7	GA4950365	BOOM POLY DRILLED, 1", CENTRE SECTION LH, 500mm ROWCROP, TRITECH S	1
8	GA4950370	BOOM POLY DRILLED, 1", CENTRE SECTION RH, 500mm ROWCROP, TRITECH S	1
9	GA5077723	HOSE BARB, ELBOW, 90 DEGREE, 1" MALE X 1" HOSE, BANJO	9
10	GA5077655	STREET ELBOW, 90 DEGREE, 1 FEMALE THREAD X 1 FEMALE THREAD, BANJO, EL100-90	8
11	GA5078151	TEE, THREADED, 1" FEMALE, BANJO	1
GA7800068 GOLDACRES		LAYOUT, BOOM SECTION PLUMBING, 16 SECTION, 24M, 500mm ROWCROP, RIVX	REV 00

24MT, TRITECH RIVX, 500MMROWCROP

Boom Plumbing, 24mt, RIVX 250mm

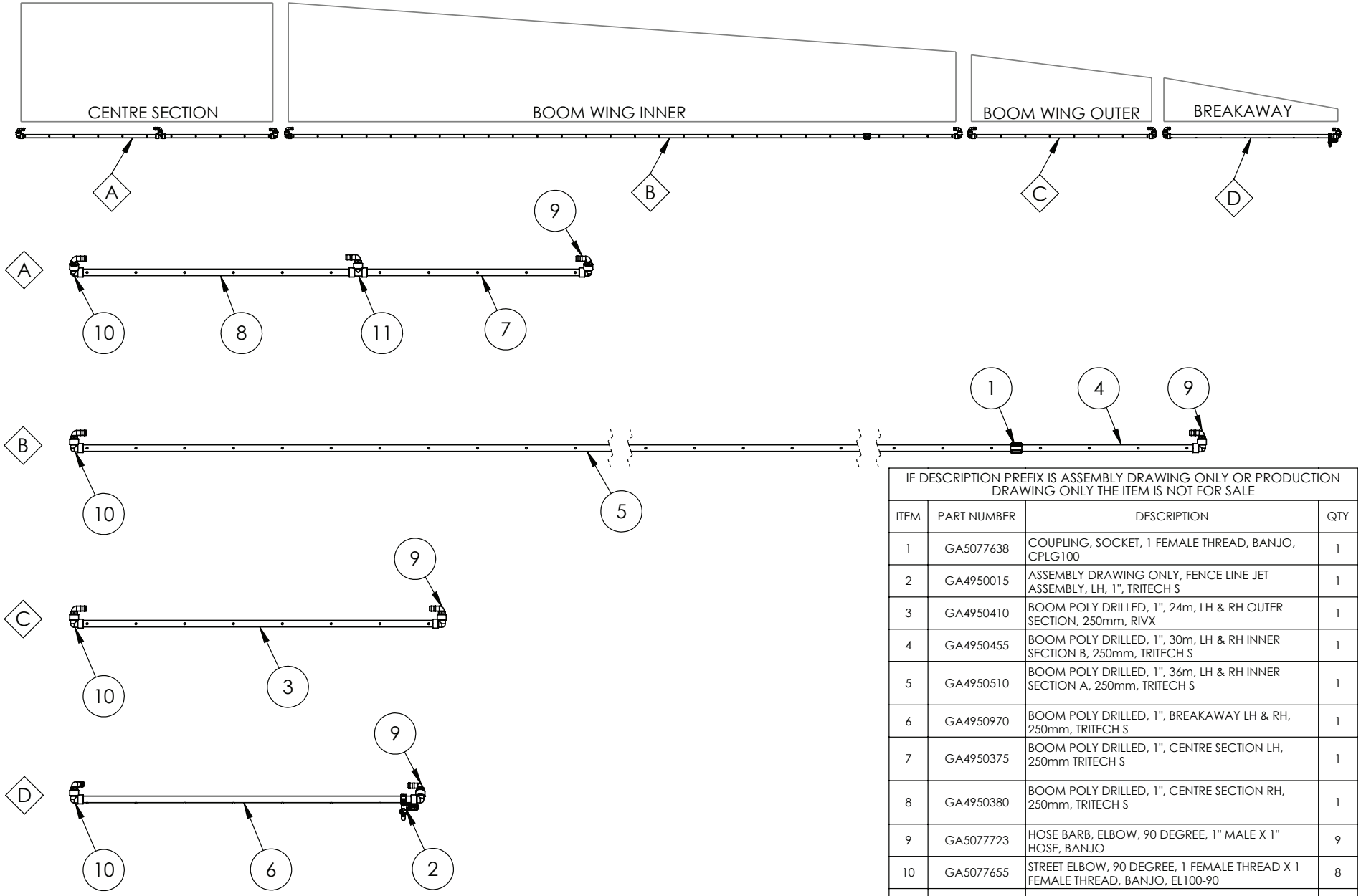

24MT, TRITECH, RIVX 250mm

IF DESCRIPTION PREFIX IS ASSEMBLY DRAWING ONLY OR PRODUCTION DRAWING ONLY THE ITEM IS NOT FOR SALE			
ITEM	PART NUMBER	DESCRIPTION	QTY
1	GA5077638	COUPLING, SOCKET, 1 FEMALE THREAD, BANJO, CPLG100	1
2	GA4950015	ASSEMBLY DRAWING ONLY, FENCE LINE JET ASSEMBLY, LH, 1", TRITECH S	1
3	GA4950410	BOOM POLY DRILLED, 1", 24m, LH & RH OUTER SECTION, 250mm, RIVX	1
4	GA4950455	BOOM POLY DRILLED, 1", 30m, LH & RH INNER SECTION B, 250mm, TRITECH S	1
5	GA4950510	BOOM POLY DRILLED, 1", 36m, LH & RH INNER SECTION A, 250mm, TRITECH S	1
6	GA4950970	BOOM POLY DRILLED, 1", BREAKAWAY LH & RH, 250mm, TRITECH S	1
7	GA4950375	BOOM POLY DRILLED, 1", CENTRE SECTION LH, 250mm TRITECH S	1
8	GA4950380	BOOM POLY DRILLED, 1", CENTRE SECTION RH, 250mm, TRITECH S	1
9	GA5077723	HOSE BARB, ELBOW, 90 DEGREE, 1" MALE X 1" HOSE, BANJO	9
10	GA5077655	STREET ELBOW, 90 DEGREE, 1 FEMALE THREAD X 1 FEMALE THREAD, BANJO, EL100-90	8
11	GA5078151	TEE, THREADED, 1" FEMALE, BANJO	1
GA7800069 GOLDACRES		LAYOUT, BOOM SECTION PLUMBING, 16 SECTION, 24M, 250mm, RIVX	REV 00

Boom Plumbing, 28mt, Broadacre

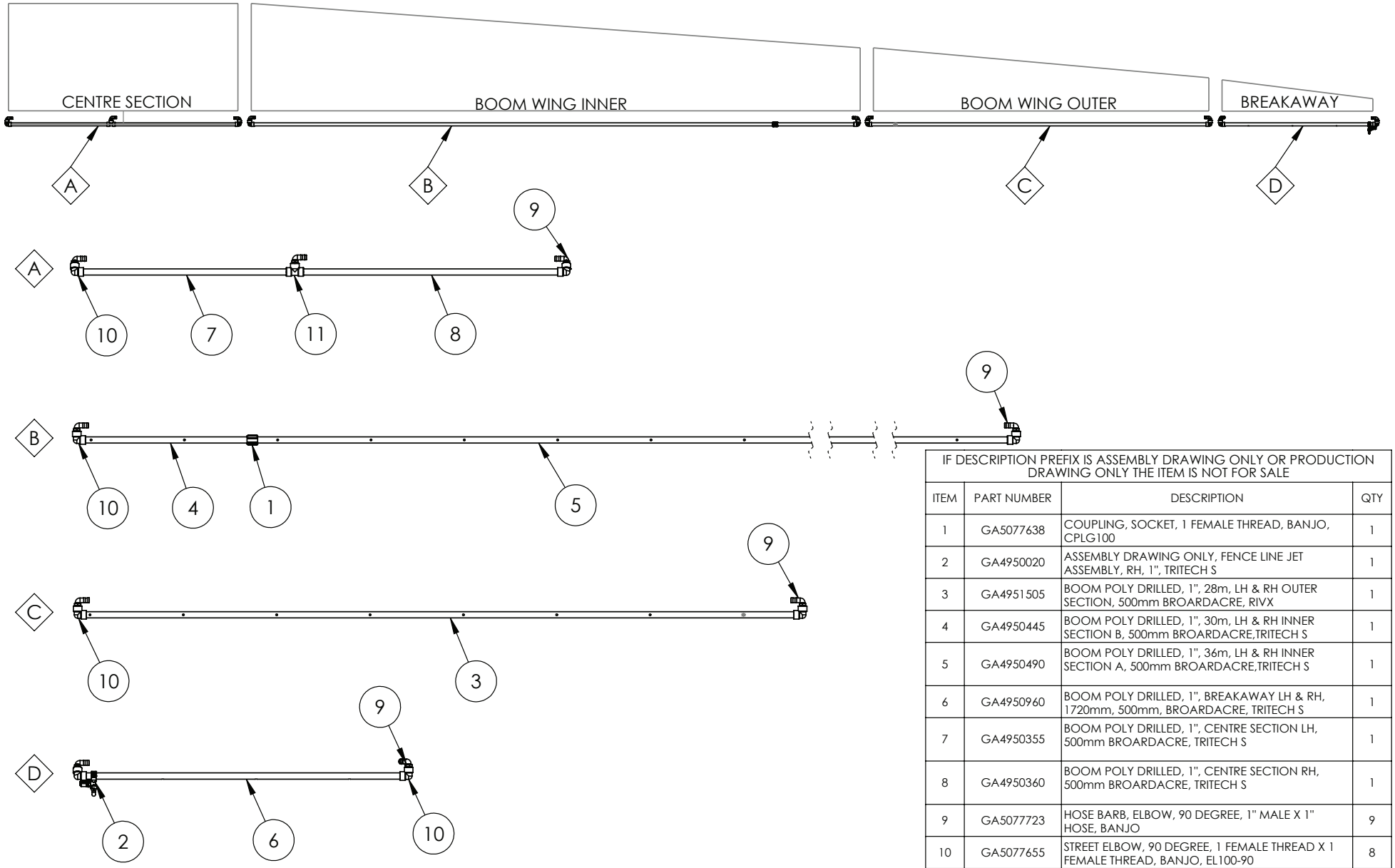

28MT, TRITECH RIVX, 500mm BROADACRE

IF DESCRIPTION PREFIX IS ASSEMBLY DRAWING ONLY OR PRODUCTION DRAWING ONLY THE ITEM IS NOT FOR SALE			
ITEM	PART NUMBER	DESCRIPTION	QTY
1	GA5077638	COUPLING, SOCKET, 1 FEMALE THREAD, BANJO, CPLG100	1
2	GA4950020	ASSEMBLY DRAWING ONLY, FENCE LINE JET ASSEMBLY, RH, 1", TRITECH S	1
3	GA4951505	BOOM POLY DRILLED, 1", 28m, LH & RH OUTER SECTION, 500mm BROARDACRE, RIVX	1
4	GA4950445	BOOM POLY DRILLED, 1", 30m, LH & RH INNER SECTION B, 500mm BROARDACRE,TRITECH S	1
5	GA4950490	BOOM POLY DRILLED, 1", 36m, LH & RH INNER SECTION A, 500mm BROARDACRE,TRITECH S	1
6	GA4950960	BOOM POLY DRILLED, 1", BREAKAWAY LH & RH, 1720mm, 500mm, BROARDACRE, TRITECH S	1
7	GA4950355	BOOM POLY DRILLED, 1", CENTRE SECTION LH, 500mm BROARDACRE, TRITECH S	1
8	GA4950360	BOOM POLY DRILLED, 1", CENTRE SECTION RH, 500mm BROARDACRE, TRITECH S	1
9	GA5077723	HOSE BARB, ELBOW, 90 DEGREE, 1" MALE X 1" HOSE, BANJO	9
10	GA5077655	STREET ELBOW, 90 DEGREE, 1 FEMALE THREAD X 1 FEMALE THREAD, BANJO, EL100-90	8
11	GA5078151	TEE, THREADED, 1" FEMALE, BANJO	1
GA7800070 GOLDACRES		LAYOUT, BOOM SECTION PLUMBING, 16 SECTION, 28M, 500mm BROARDACRE, RIVX	REV 00

Boom Plumbing, 28mt Rowcrop

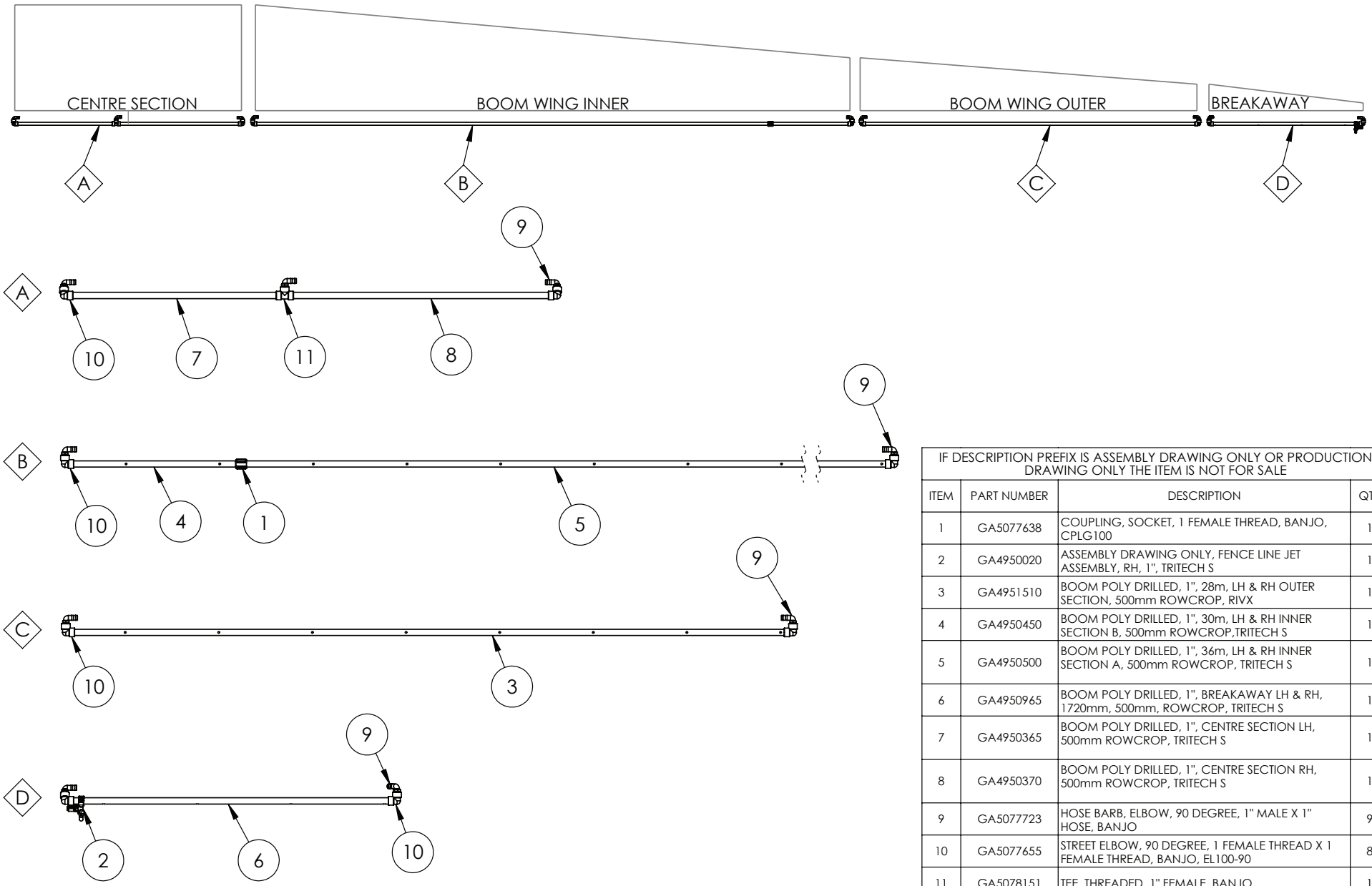

28MT, TRITECH RIVX, 500mm ROWCROP

IF DESCRIPTION PREFIX IS ASSEMBLY DRAWING ONLY OR PRODUCTION DRAWING ONLY THE ITEM IS NOT FOR SALE			
ITEM	PART NUMBER	DESCRIPTION	QTY
1	GA5077638	COUPLING, SOCKET, 1 FEMALE THREAD, BANJO, CPLG100	1
2	GA4950020	ASSEMBLY DRAWING ONLY, FENCE LINE JET ASSEMBLY, RH, 1", TRITECH S	1
3	GA4951510	BOOM POLY DRILLED, 1", 28m, LH & RH OUTER SECTION, 500mm ROWCROP, RIVX	1
4	GA4950450	BOOM POLY DRILLED, 1", 30m, LH & RH INNER SECTION B, 500mm ROWCROP,TRITECH S	1
5	GA4950500	BOOM POLY DRILLED, 1", 36m, LH & RH INNER SECTION A, 500mm ROWCROP, TRITECH S	1
6	GA4950965	BOOM POLY DRILLED, 1", BREAKAWAY LH & RH, 1720mm, 500mm, ROWCROP, TRITECH S	1
7	GA4950365	BOOM POLY DRILLED, 1", CENTRE SECTION LH, 500mm ROWCROP, TRITECH S	1
8	GA4950370	BOOM POLY DRILLED, 1", CENTRE SECTION RH, 500mm ROWCROP, TRITECH S	1
9	GA5077723	HOSE BARB, ELBOW, 90 DEGREE, 1" MALE X 1" HOSE, BANJO	9
10	GA5077655	STREET ELBOW, 90 DEGREE, 1 FEMALE THREAD X 1 FEMALE THREAD, BANJO, EL100-90	8
11	GA5078151	TEE, THREADED, 1" FEMALE, BANJO	1
GA7800071 GOLDACRES		LAYOUT, BOOM SECTION PLUMBING, 16 SECTION, 28M, 500mm ROWCROP, RIVX	REV 00

Boom Plumbing, 28mt, RIVX 250mm

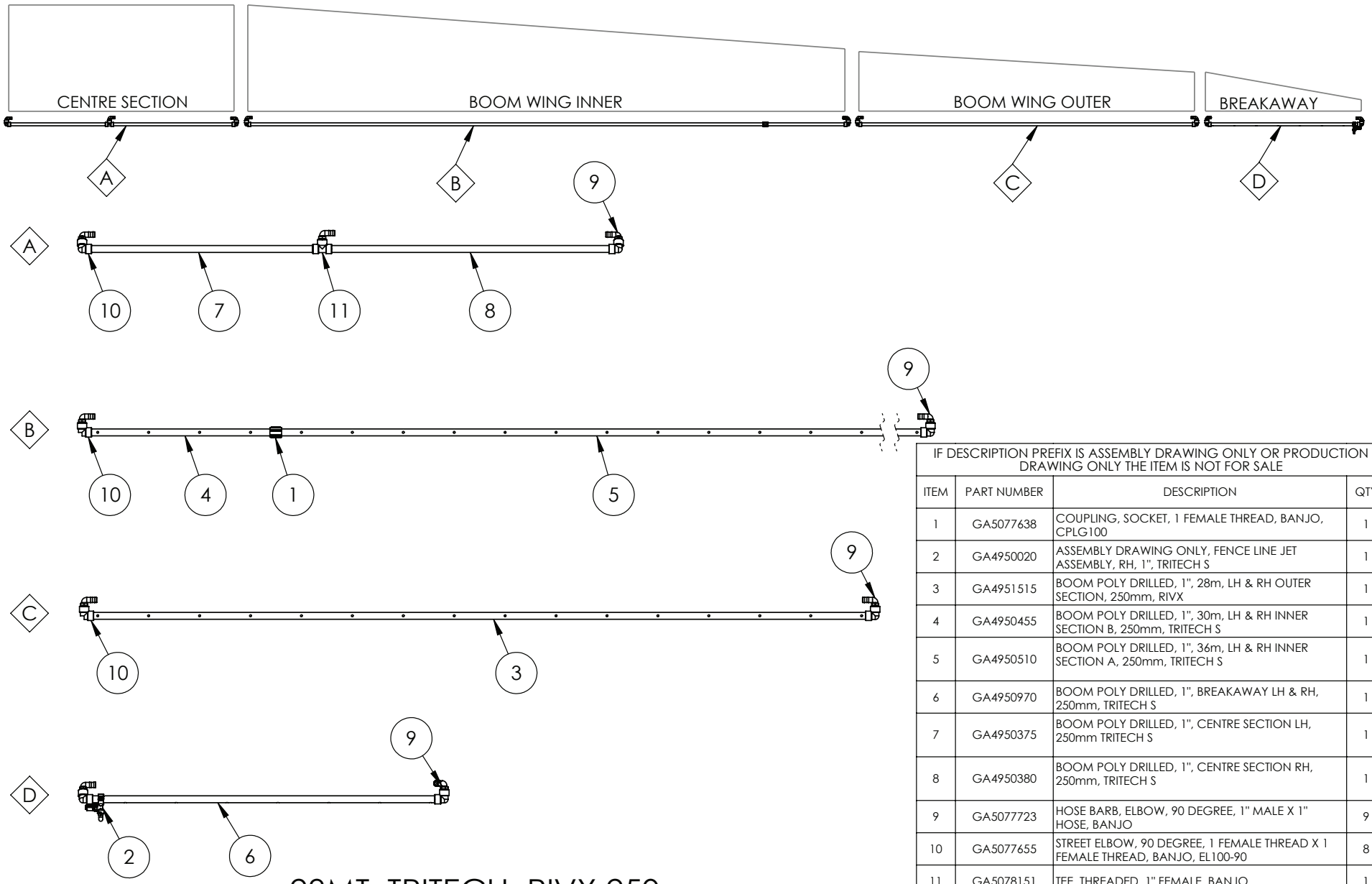

28MT, TRITECH, RIVX 250mm

IF DESCRIPTION PREFIX IS ASSEMBLY DRAWING ONLY OR PRODUCTION DRAWING ONLY THE ITEM IS NOT FOR SALE			
ITEM	PART NUMBER	DESCRIPTION	QTY
1	GA5077638	COUPLING, SOCKET, 1 FEMALE THREAD, BANJO, CPLG100	1
2	GA4950020	ASSEMBLY DRAWING ONLY, FENCE LINE JET ASSEMBLY, RH, 1", TRITECH S	1
3	GA4951515	BOOM POLY DRILLED, 1", 28m, LH & RH OUTER SECTION, 250mm, RIVX	1
4	GA4950455	BOOM POLY DRILLED, 1", 30m, LH & RH INNER SECTION B, 250mm, TRITECH S	1
5	GA4950510	BOOM POLY DRILLED, 1", 36m, LH & RH INNER SECTION A, 250mm, TRITECH S	1
6	GA4950970	BOOM POLY DRILLED, 1", BREAKAWAY LH & RH, 250mm, TRITECH S	1
7	GA4950375	BOOM POLY DRILLED, 1", CENTRE SECTION LH, 250mm TRITECH S	1
8	GA4950380	BOOM POLY DRILLED, 1", CENTRE SECTION RH, 250mm, TRITECH S	1
9	GA5077723	HOSE BARB, ELBOW, 90 DEGREE, 1" MALE X 1" HOSE, BANJO	9
10	GA5077655	STREET ELBOW, 90 DEGREE, 1 FEMALE THREAD X 1 FEMALE THREAD, BANJO, EL100-90	8
11	GA5078151	TEE, THREADED, 1" FEMALE, BANJO	1
GA7800072 GOLDACRES		LAYOUT, BOOM SECTION PLUMBING, 16 SECTION, 28M, 250mm, RIVX	REV 00

Boom Plumbing, 30mt, Broadacre

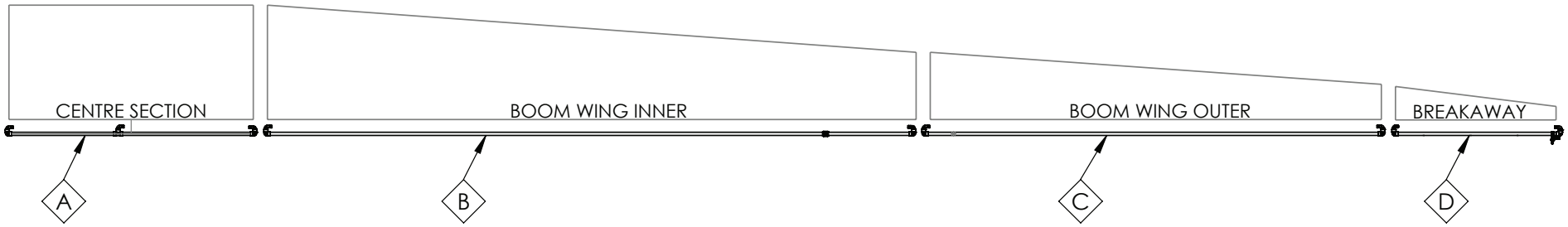

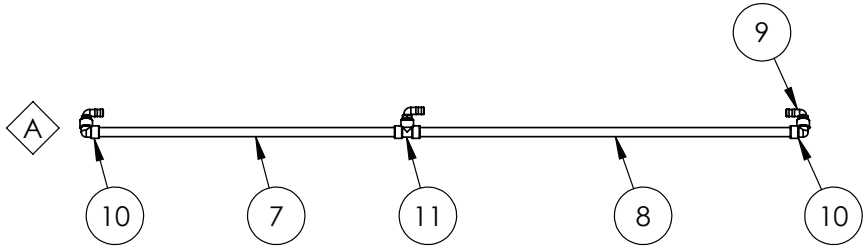

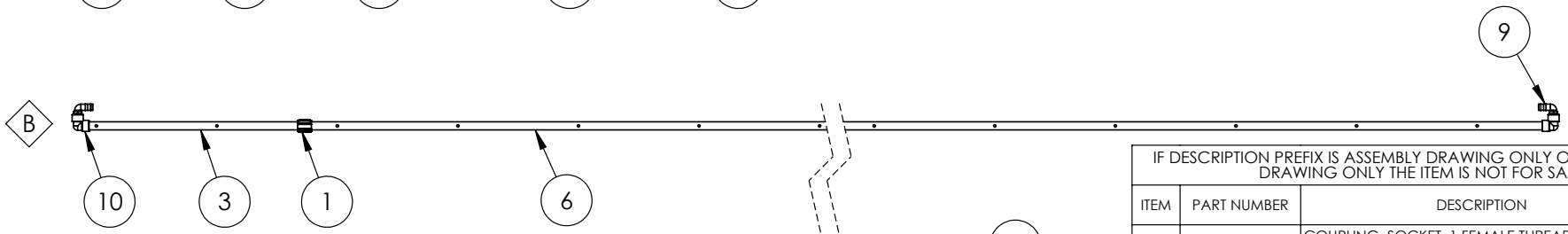

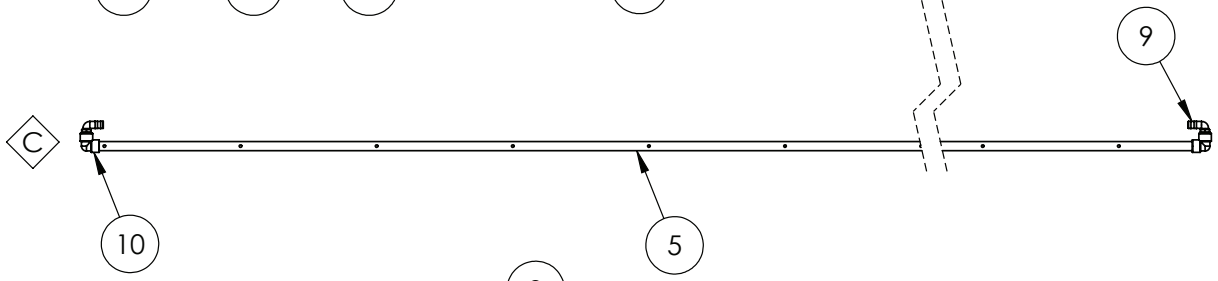

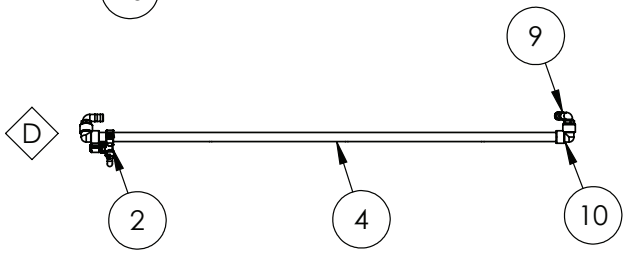

IF DESCRIPTION PREFIX IS ASSEMBLY DRAWING ONLY OR PRODUCTION DRAWING ONLY THE ITEM IS NOT FOR SALE

ITEM	PART NUMBER	DESCRIPTION	QTY
1	GA5077638	COUPLING, SOCKET, 1 FEMALE THREAD, BANJO, CPLG100	1
2	GA4950020	ASSEMBLY DRAWING ONLY, FENCE LINE JET ASSEMBLY, RH, 1", TRITECH S	1
3	GA4950445	BOOM POLY DRILLED, 1", 30m, LH & RH INNER SECTION B, 500mm BROARDACRE,TRITECH S	1
4	GA4950960	BOOM POLY DRILLED, 1", BREAKAWAY LH & RH, 1720mm, 500mm, BROARDACRE, TRITECH S	1
5	GA4950430	BOOM POLY DRILLED, 1", 30m, LH & RH OUTER SECTION, 500mm BROARDACRE, TRITECH S	1
6	GA4950490	BOOM POLY DRILLED, 1", 36m, LH & RH INNER SECTION A, 500mm BROARDACRE,TRITECH S	1
7	GA4950355	BOOM POLY DRILLED, 1", CENTRE SECTION LH, 500mm BROARDACRE, TRITECH S	1
8	GA4950360	BOOM POLY DRILLED, 1", CENTRE SECTION RH, 500mm BROARDACRE, TRITECH S	1
9	GA5077723	HOSE BARB, ELBOW, 90 DEGREE, 1" MALE X 1" HOSE, BANJO	9
10	GA5077655	STREET ELBOW, 90 DEGREE, 1 FEMALE THREAD X 1 FEMALE THREAD, BANJO, EL100-90	8
11	GA5078151	TEE, THREADED, 1" FEMALE, BANJO	1
GA7800073 GOLDACRES		LAYOUT, BOOM SECTION PLUMBING, 16 SECTION, 30M, 500mm BROARDACRE, RIVX	REV 00

30MT, TRITECH RIVX, 500mm BROADACRE

Boom Plumbing, 30mt, Rowcrop

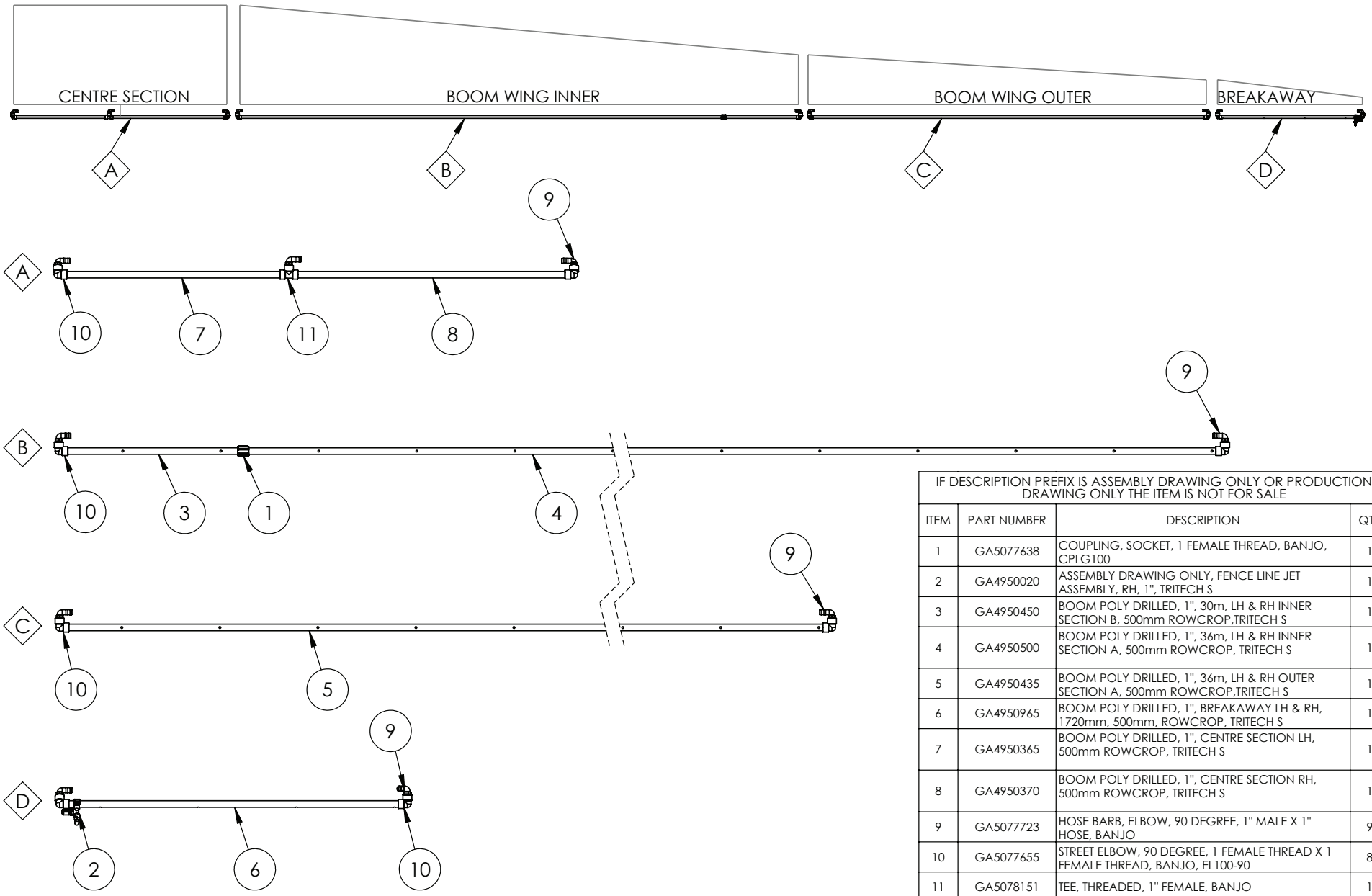

30MT, TRITECH RIVX, 500mm ROWCROP

IF DESCRIPTION PREFIX IS ASSEMBLY DRAWING ONLY OR PRODUCTION DRAWING ONLY THE ITEM IS NOT FOR SALE

ITEM	PART NUMBER	DESCRIPTION	QTY
1	GA5077638	COUPLING, SOCKET, 1 FEMALE THREAD, BANJO, CPLG100	1
2	GA4950020	ASSEMBLY DRAWING ONLY, FENCE LINE JET ASSEMBLY, RH, 1", TRITECH S	1
3	GA4950450	BOOM POLY DRILLED, 1", 30m, LH & RH INNER SECTION B, 500mm ROWCROP,TRITECH S	1
4	GA4950500	BOOM POLY DRILLED, 1", 36m, LH & RH INNER SECTION A, 500mm ROWCROP, TRITECH S	1
5	GA4950435	BOOM POLY DRILLED, 1", 36m, LH & RH OUTER SECTION A, 500mm ROWCROP,TRITECH S	1
6	GA4950965	BOOM POLY DRILLED, 1", BREAKAWAY LH & RH, 1720mm, 500mm, ROWCROP, TRITECH S	1
7	GA4950365	BOOM POLY DRILLED, 1", CENTRE SECTION LH, 500mm ROWCROP, TRITECH S	1
8	GA4950370	BOOM POLY DRILLED, 1", CENTRE SECTION RH, 500mm ROWCROP, TRITECH S	1
9	GA5077723	HOSE BARB, ELBOW, 90 DEGREE, 1" MALE X 1" HOSE, BANJO	9
10	GA5077655	STREET ELBOW, 90 DEGREE, 1 FEMALE THREAD X 1 FEMALE THREAD, BANJO, EL100-90	8
11	GA5078151	TEE, THREADED, 1" FEMALE, BANJO	1
GA7800074 GOLDACRES		LAYOUT, BOOM SECTION PLUMBING, 16 SECTION, 30M, 500mm ROWCROP, RIVX	REV 01

Boom Plumbing, 30mt, RIVX 250mm

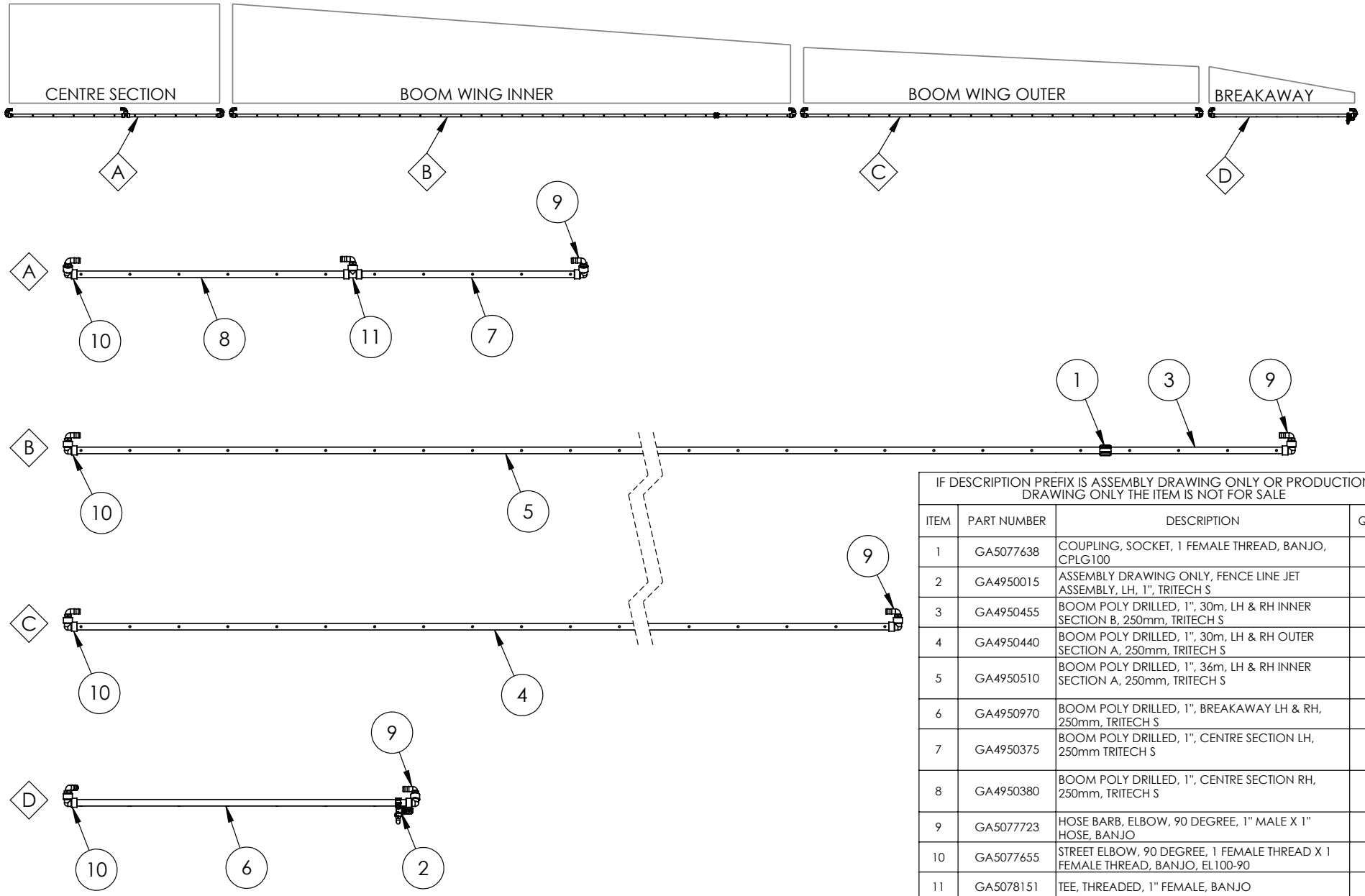

IF DESCRIPTION PREFIX IS ASSEMBLY DRAWING ONLY OR PRODUCTION DRAWING ONLY THE ITEM IS NOT FOR SALE			
ITEM	PART NUMBER	DESCRIPTION	QTY
1	GA5077638	COUPLING, SOCKET, 1 FEMALE THREAD, BANJO, CPLG100	1
2	GA4950015	ASSEMBLY DRAWING ONLY, FENCE LINE JET ASSEMBLY, LH, 1", TRITECH S	1
3	GA4950455	BOOM POLY DRILLED, 1", 30m, LH & RH INNER SECTION B, 250mm, TRITECH S	1
4	GA4950440	BOOM POLY DRILLED, 1", 30m, LH & RH OUTER SECTION A, 250mm, TRITECH S	1
5	GA4950510	BOOM POLY DRILLED, 1", 36m, LH & RH INNER SECTION A, 250mm, TRITECH S	1
6	GA4950970	BOOM POLY DRILLED, 1", BREAKAWAY LH & RH, 250mm, TRITECH S	1
7	GA4950375	BOOM POLY DRILLED, 1", CENTRE SECTION LH, 250mm TRITECH S	1
8	GA4950380	BOOM POLY DRILLED, 1", CENTRE SECTION RH, 250mm, TRITECH S	1
9	GA5077723	HOSE BARB, ELBOW, 90 DEGREE, 1" MALE X 1" HOSE, BANJO	9
10	GA5077655	STREET ELBOW, 90 DEGREE, 1 FEMALE THREAD X 1 FEMALE THREAD, BANJO, EL100-90	8
11	GA5078151	TEE, THREADED, 1" FEMALE, BANJO	1
GA7800075 GOLDACRES		LAYOUT, BOOM SECTION PLUMBING, 16 SECTION, 30M, 250mm, RIVX	REV 01

30MT, TRITECH, 250mm RIVX

Boom Plumbing, 36mt, Broadacre, 500mm Spacing

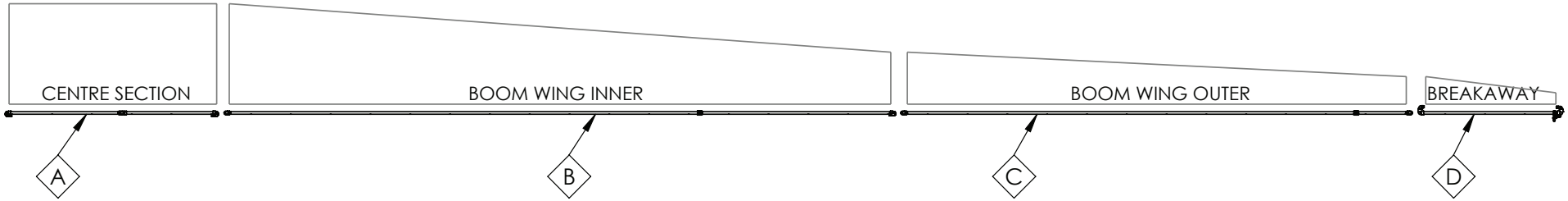

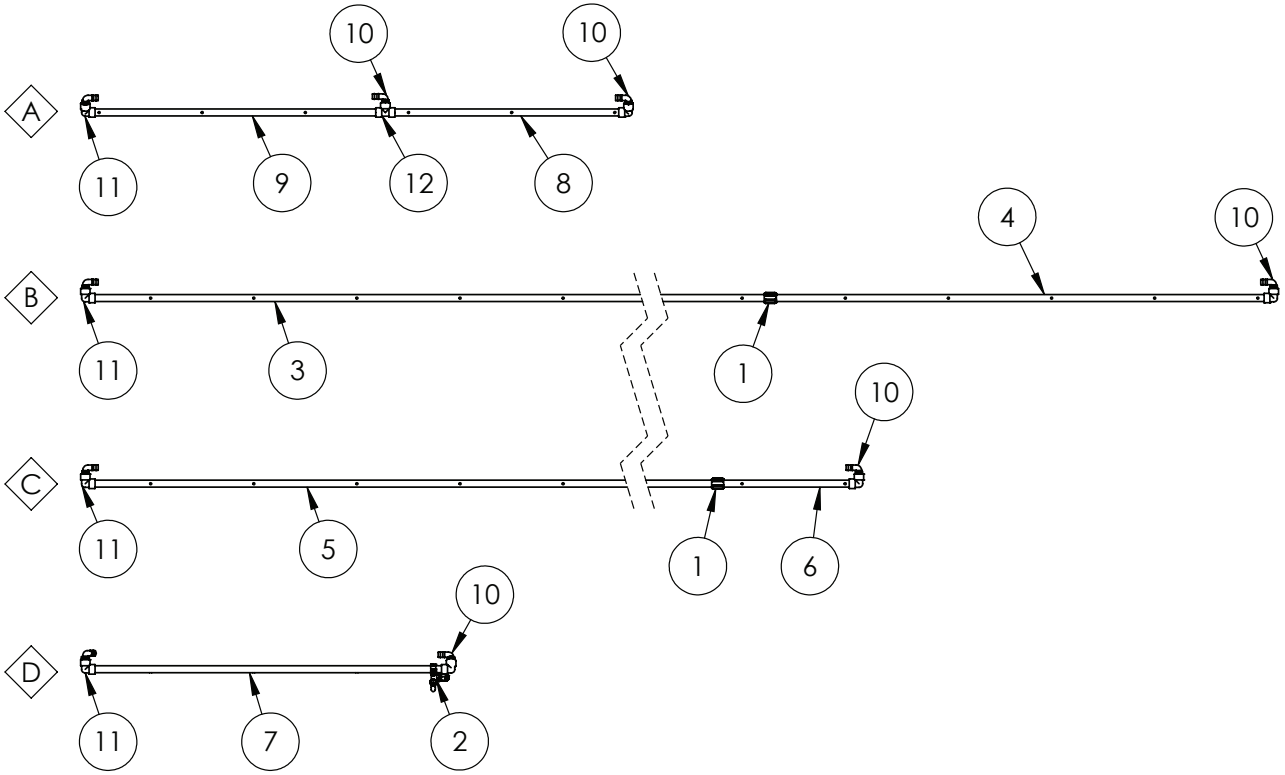

36MT, TRITECH RIVX, 500mm BROADACRE

IF DESCRIPTION PREFIX IS ASSEMBLY DRAWING ONLY OR PRODUCTION DRAWING ONLY THE ITEM IS NOT FOR SALE

ITEM	PART NUMBER	DESCRIPTION	QTY
1	GA5077638	COUPLING, SOCKET, 1 FEMALE THREAD, BANJO, CPLG100	2
2	GA4950015	ASSEMBLY DRAWING ONLY, FENCE LINE JET ASSEMBLY, LH, 1", TRITECH S	1
3	GA4950490	BOOM POLY DRILLED, 1", 36m, LH & RH INNER SECTION A, 500mm BROARDACRE,TRITECH S	1
4	GA4950495	BOOM POLY DRILLED, 1", 36m, LH & RH INNER SECTION B, 500mm BROARDACRE,TRITECH S	1
5	GA4950460	BOOM POLY DRILLED, 1", 36m, LH & RH OUTER SECTION A, 500mm BROARDACRE,TRITECH S	1
6	GA4950465	BOOM POLY DRILLED, 1", 36m, LH & RH OUTER SECTION B, 500mm BROARDACRE,TRITECH S	1
7	GA4950960	BOOM POLY DRILLED, 1", BREAKAWAY LH & RH, 1720mm, 500mm, BROARDACRE, TRITECH S	1
8	GA4950355	BOOM POLY DRILLED, 1", CENTRE SECTION LH, 500mm BROARDACRE, TRITECH S	1
9	GA4950360	BOOM POLY DRILLED, 1", CENTRE SECTION RH, 500mm BROARDACRE, TRITECH S	1
10	GA5077723	HOSE BARB, ELBOW, 90 DEGREE, 1" MALE X 1" HOSE, BANJO	9
11	GA5077655	STREET ELBOW, 90 DEGREE, 1 FEMALE THREAD X 1 FEMALE THREAD, BANJO, EL100-90	8
12	GA5078151	TEE, THREADED, 1" FEMALE, BANJO	1
GA7800012 GOLDACRES		LAYOUT, BOOM SECTION PLUMBING, 16 SECTION, 36M, TRITECH RIVX, 500mm BROARDACRE	REV 01

Boom Plumbing, 36mt, Rowcrop, 500mm Spacing

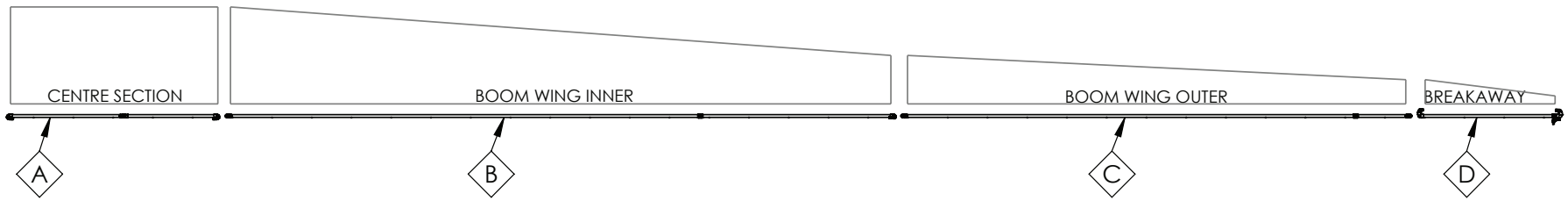

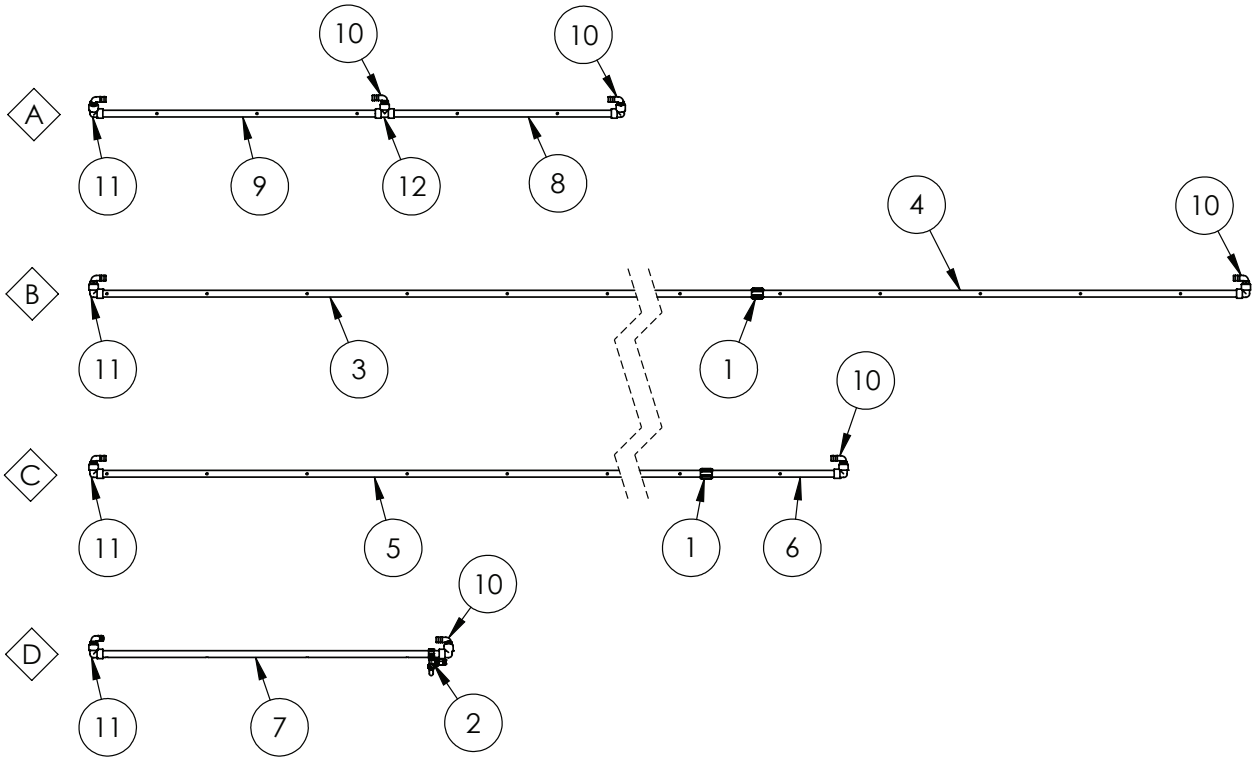

36MT, TRITECH RIVX, 500mm, ROWCROP, 16 SECTION

IF DESCRIPTION PREFIX IS ASSEMBLY DRAWING ONLY OR PRODUCTION DRAWING ONLY THE ITEM IS NOT FOR SALE			
ITEM	PART NUMBER	DESCRIPTION	QTY
1	GA5077638	COUPLING, SOCKET, 1 FEMALE THREAD, BANJO, CPLG100	2
2	GA4950015	ASSEMBLY DRAWING ONLY, FENCE LINE JET ASSEMBLY, LH, 1", TRITECH S	1
3	GA4950500	BOOM POLY DRILLED, 1", 36m, LH & RH INNER SECTION A, 500mm ROWCROP, TRITECH S	1
4	GA4950505	BOOM POLY DRILLED, 1", 36m, LH & RH INNER SECTION B, 500mm ROWCROP,TRITECH S	1
5	GA4950470	BOOM POLY DRILLED, 1", 36m, LH & RH OUTER SECTION A, 500mm ROWCROP,TRITECH S	1
6	GA4950475	BOOM POLY DRILLED, 1", 36m, LH & RH OUTER SECTION B, 500mm ROWCROP,TRITECH S	1
7	GA4950965	BOOM POLY DRILLED, 1", BREAKAWAY LH & RH, 1720mm, 500mm, ROWCROP, TRITECH S	1
8	GA4950365	BOOM POLY DRILLED, 1", CENTRE SECTION LH, 500mm ROWCROP, TRITECH S	1
9	GA4950370	BOOM POLY DRILLED, 1", CENTRE SECTION RH, 500mm ROWCROP, TRITECH S	1
10	GA5077723	HOSE BARB, ELBOW, 90 DEGREE, 1" MALE X 1" HOSE, BANJO	9
11	GA5077655	STREET ELBOW, 90 DEGREE, 1 FEMALE THREAD X 1 FEMALE THREAD, BANJO, EL100-90	8
12	GA5078151	TEE, THREADED, 1" FEMALE, BANJO	1
GA7800013 GOLDACRES		LAYOUT, BOOM SECTION PLUMBING, 16 SECTION, 36M, TRITECH RIVX, 500mm ROWCROP	REV 01

Boom Plumbing, 36mt, 250mm Spacing

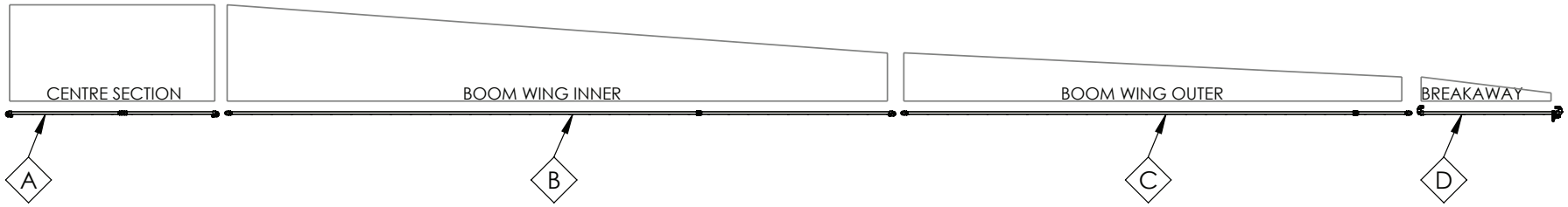

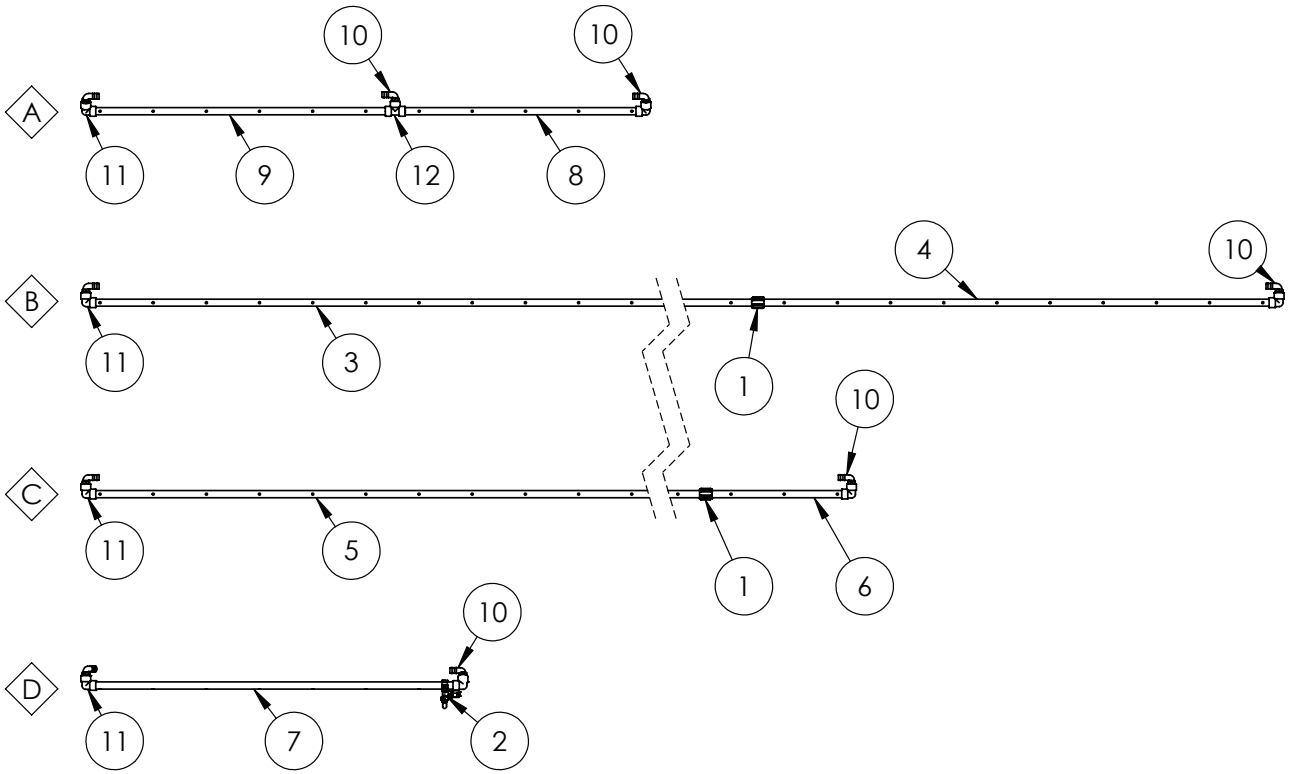

IF DESCRIPTION PREFIX IS ASSEMBLY DRAWING ONLY OR PRODUCTION DRAWING ONLY THE ITEM IS NOT FOR SALE			
ITEM	PART NUMBER	DESCRIPTION	QTY
1	GA5077638	COUPLING, SOCKET, 1 FEMALE THREAD, BANJO, CPLG100	2
2	GA4950015	ASSEMBLY DRAWING ONLY, FENCE LINE JET ASSEMBLY, LH, 1", TRITECH S	1
3	GA4950510	BOOM POLY DRILLED, 1", 36m, LH & RH INNER SECTION A, 250mm, TRITECH S	1
4	GA4950515	BOOM POLY DRILLED, 1", 36m, LH & RH INNER SECTION B, 250mm, TRITECH S	1
5	GA4950480	BOOM POLY DRILLED, 1", 36m, LH & RH OUTER SECTION A, 250mm, TRITECH S	1
6	GA4950485	BOOM POLY DRILLED, 1", 36m, LH & RH OUTER SECTION B, 250mm, TRITECH S	1
7	GA4950970	BOOM POLY DRILLED, 1", BREAKAWAY LH & RH, 250mm, TRITECH S	1
8	GA4950375	BOOM POLY DRILLED, 1", CENTRE SECTION LH, 250mm TRITECH S	1
9	GA4950380	BOOM POLY DRILLED, 1", CENTRE SECTION RH, 250mm, TRITECH S	1
10	GA5077723	HOSE BARB, ELBOW, 90 DEGREE, 1" MALE X 1" HOSE, BANJO	9
11	GA5077655	STREET ELBOW, 90 DEGREE, 1 FEMALE THREAD X 1 FEMALE THREAD, BANJO, EL100-90	8
12	GA5078151	TEE, THREADED, 1" FEMALE, BANJO	1
GA7800014 GOLDACRES	LAYOUT, BOOM SECTION PLUMBING, 16 SECTION, 36M, TRITECH RIVX, 250mm		REV 01

36MT, TRITECH RIVX, 16 SECTION, 250mm SPACING

Boom, Recirculation Poly's, 24mt - 36mt

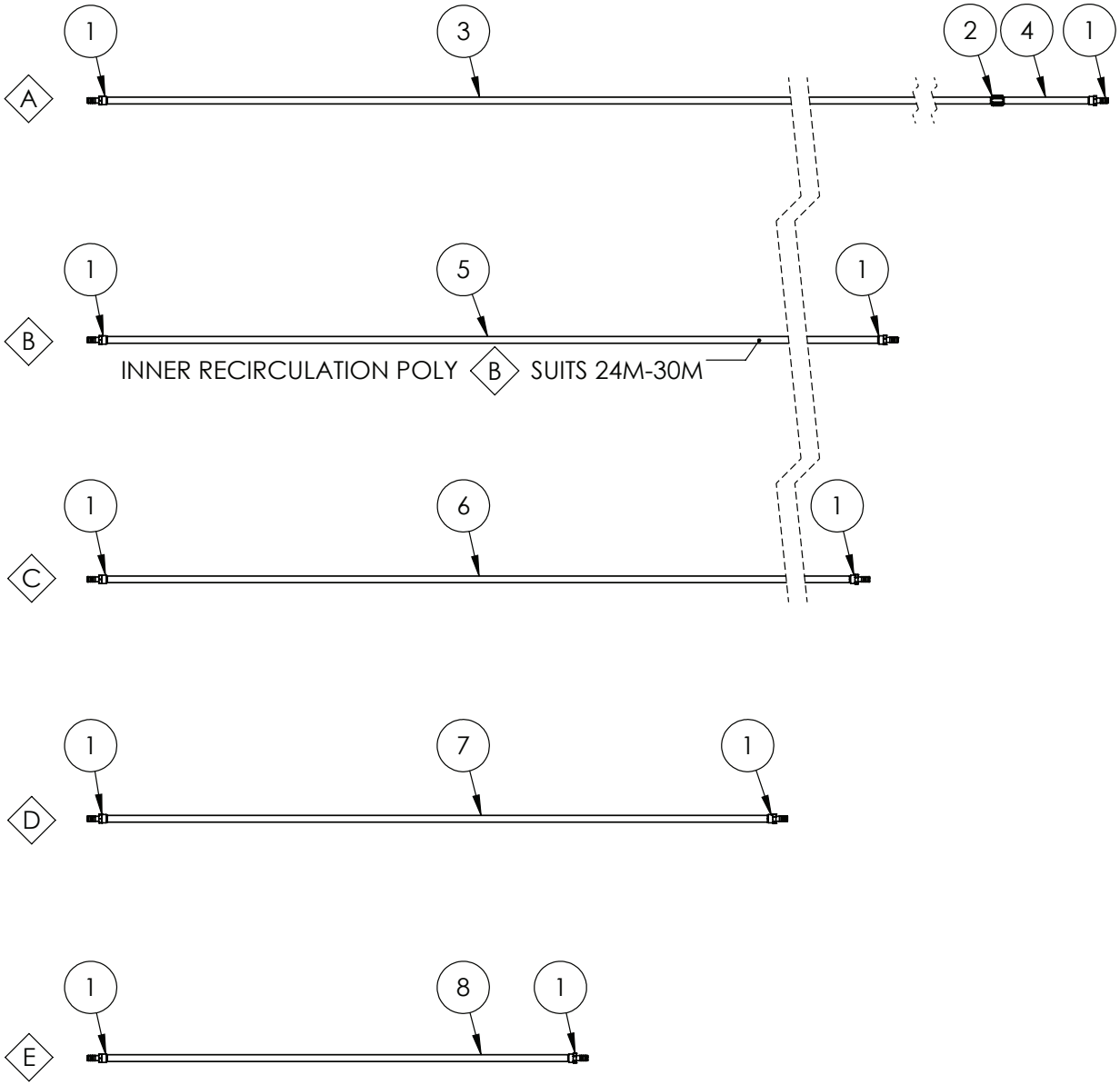

ITEM	PART NUMBER	DESCRIPTION	QTY
A	-	BOOM POLY ASSEMBLY, 1" 30m, INNER SECTION, BOOM RECIRCULATION, RIVX	1
B	-	BOOM POLY ASSEMBLY, 36M, INNER SECTION, BOOM RECIRCULATION,TRITECH S	
C	-	BOOM POLY, 1IN 36M, INNER SECTION A, BOOM RECIRCULATION, RIVX	
D	-	BOOM POLY, 1IN 36M, INNER SECTION B, BOOM RECIRCULATION, RIVX	
E	-	BOOM POLY, 1IN 30M, INNER SECTION, BOOM RECIRCULATION, RIVX	

IF DESCRIPTION PREFIX IS ASSEMBLY DRAWING ONLY OR PRODUCTION DRAWING ONLY THE ITEM IS NOT FOR SALE

ITEM	PART NUMBER	DESCRIPTION	QTY
1	GA5077747	HOSE BARB, STRAIGHT, 1 FEMALE THREAD X 1 HOSE, BANJO, HBF100	-
2	GA5077638	COUPLING, SOCKET, 1 FEMALE THREAD, BANJO, CPLG100	-
3	GA4950645	BOOM POLY, 1IN 36M, INNER SECTION A, BOOM RECIRCULATION, RIVX	-
4	GA4950650	BOOM POLY, 1IN 36M, INNER SECTION B, BOOM RECIRCULATION, RIVX	-
5	GA4950635	BOOM POLY, 1IN 30M, INNER SECTION, BOOM RECIRCULATION, RIVX	-
6	GA4950655	BOOM POLY, 1IN 36M, OUTER SECTION, BOOM RECIRCULATION, RIVX	-
7	GA4950640	BOOM POLY, 1IN 30M, OUTER SECTION, BOOM RECIRCULATION, RIVX	-
8	GA4951525	BOOM POLY, 1IN 28M, OUTER SECTION, BOOM RECIRCULATION, RIVX	-
GA7800095 GOLDACRES		BOOM POLY ASSEMBLY, RECIRCULATION, 24-36MT, RIVX, PRAIRIE PRO S2	REV 00

Boom Plumbing, 48mt

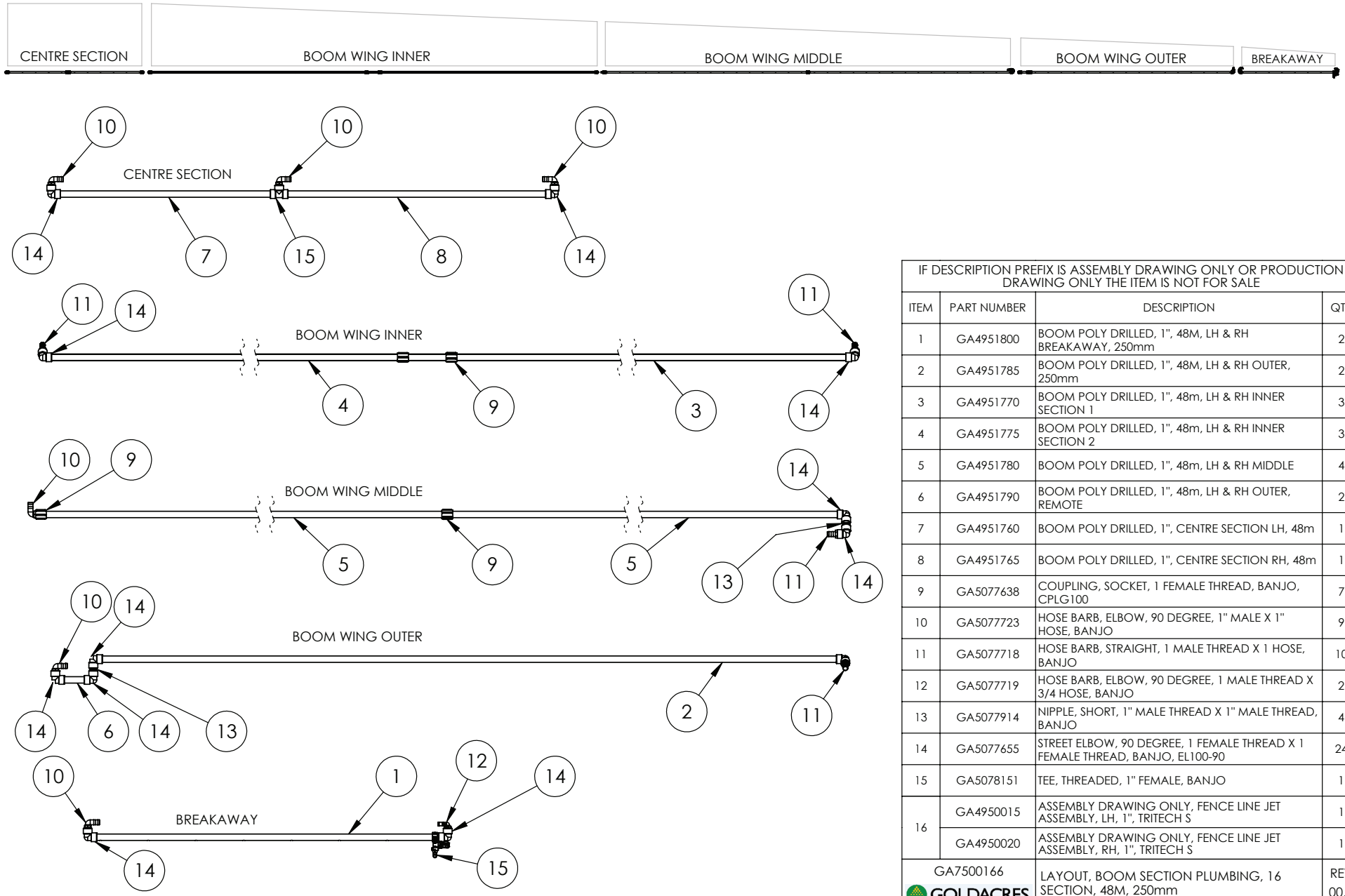

IF DESCRIPTION PREFIX IS ASSEMBLY DRAWING ONLY OR PRODUCTION DRAWING ONLY THE ITEM IS NOT FOR SALE			
ITEM	PART NUMBER	DESCRIPTION	QTY
1	GA4951800	BOOM POLY DRILLED, 1", 48M, LH & RH BREAKAWAY, 250mm	2
2	GA4951785	BOOM POLY DRILLED, 1", 48M, LH & RH OUTER, 250mm	2
3	GA4951770	BOOM POLY DRILLED, 1", 48m, LH & RH INNER SECTION 1	3
4	GA4951775	BOOM POLY DRILLED, 1", 48m, LH & RH INNER SECTION 2	3
5	GA4951780	BOOM POLY DRILLED, 1", 48m, LH & RH MIDDLE	4
6	GA4951790	BOOM POLY DRILLED, 1", 48m, LH & RH OUTER, REMOTE	2
7	GA4951760	BOOM POLY DRILLED, 1", CENTRE SECTION LH, 48m	1
8	GA4951765	BOOM POLY DRILLED, 1", CENTRE SECTION RH, 48m	1
9	GA5077638	COUPLING, SOCKET, 1 FEMALE THREAD, BANJO, CPLG100	7
10	GA5077723	HOSE BARB, ELBOW, 90 DEGREE, 1" MALE X 1" HOSE, BANJO	9
11	GA5077718	HOSE BARB, STRAIGHT, 1 MALE THREAD X 1 HOSE, BANJO	10
12	GA5077719	HOSE BARB, ELBOW, 90 DEGREE, 1 MALE THREAD X 3/4 HOSE, BANJO	2
13	GA5077914	NIPPLE, SHORT, 1" MALE THREAD X 1" MALE THREAD, BANJO	4
14	GA5077655	STREET ELBOW, 90 DEGREE, 1 FEMALE THREAD X 1 FEMALE THREAD, BANJO, EL100-90	24
15	GA5078151	TEE, THREADED, 1" FEMALE, BANJO	1
16	GA4950015	ASSEMBLY DRAWING ONLY, FENCE LINE JET ASSEMBLY, LH, 1", TRITECH S	1
	GA4950020	ASSEMBLY DRAWING ONLY, FENCE LINE JET ASSEMBLY, RH, 1", TRITECH S	1
GA7500166 GOLDACRES		LAYOUT, BOOM SECTION PLUMBING, 16 SECTION, 48M, 250mm	REV 00.B

08 - Decals

Decal Kit, GA8701568

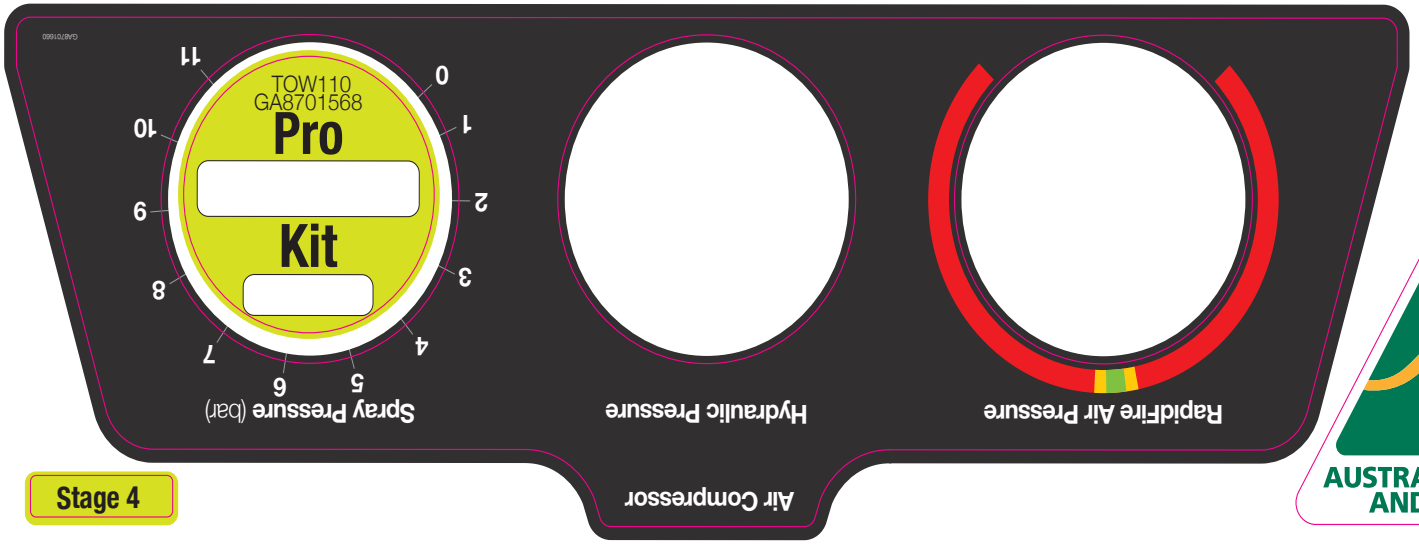

Stage 4

Warehouse

Stage 1

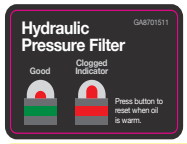

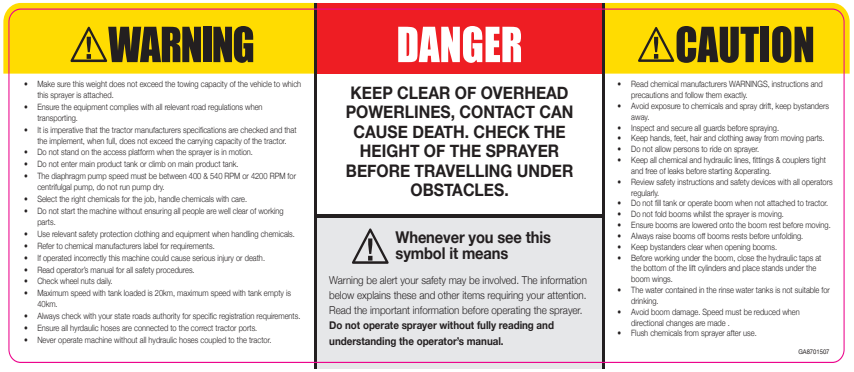

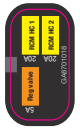

Stage 2

Decal Kit, GA8701613

Decal Kit, GA8701688

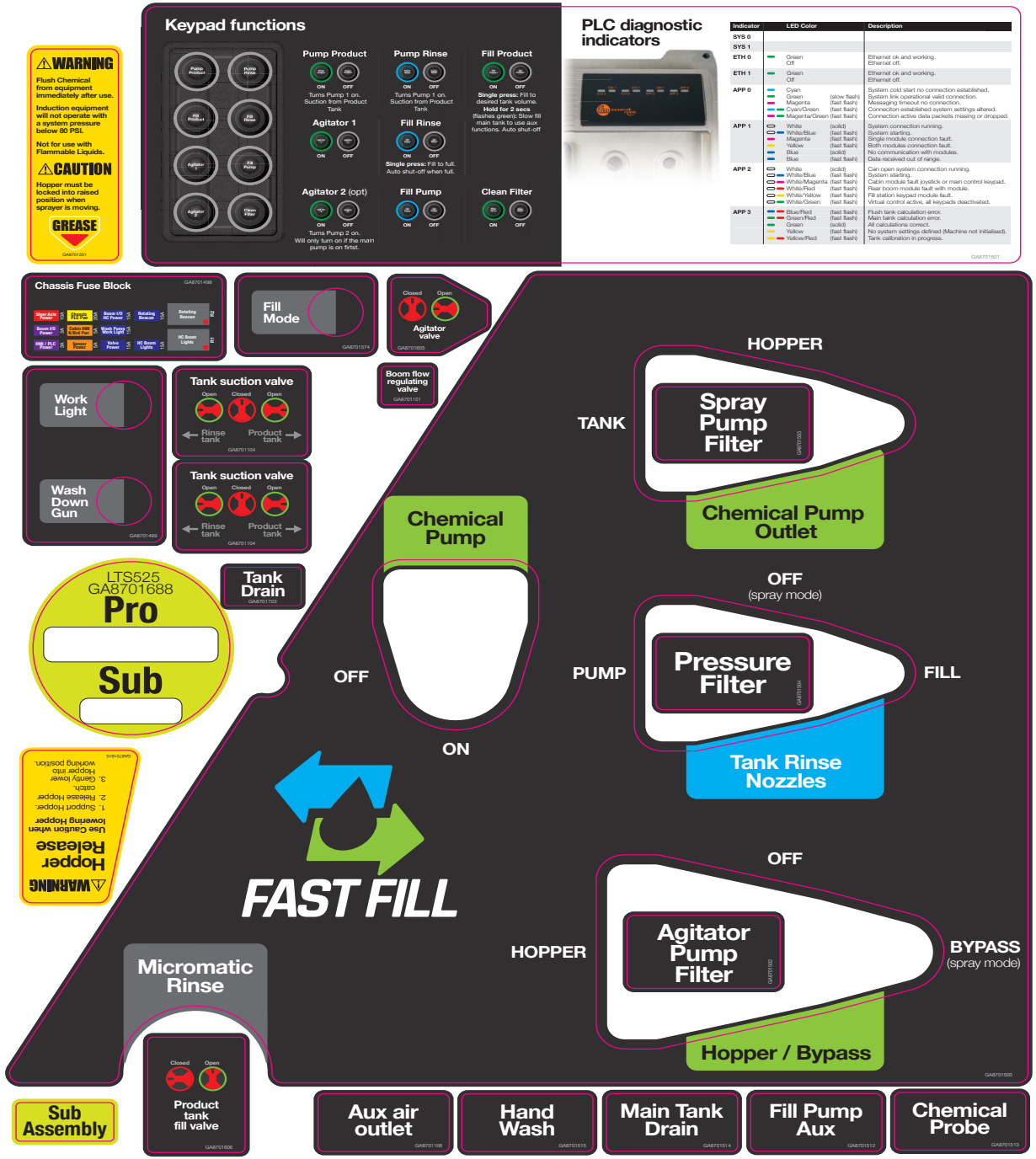

Indicator	LED Color		Description
SYS 0			
SYS 1			
ETH 0	Green Off		Ethernet ok and working. Ethernet off.
ETH 1	Green Off		Ethernet ok and working. Ethernet off.
APP 0	Cyan		System cold start no connection established.
	Green	(slow flash)	System link operational valid connection.
	Magenta	(fast flash)	Messaging timeout no connection.
	Cyan/Green	(fast flash)	Connection established system settings altered.
	Magenta/Green	(fast flash)	Connection active data packets missing or dropped.
APP 1	White	(solid)	System connection running.
	White/Blue	(fast flash)	System starting.
	Magenta	(fast flash)	Single module connection fault.
	Yellow	(fast flash)	Both modules connection fault.
	Blue	(solid)	No communication with modules.
	Blue	(fast flash)	Data received out of range.
APP 2	White	(solid)	Can open system connection running.
	White/Blue	(fast flash)	System starting.
	White/Magenta	(fast flash)	Cabin module fault joystick or main control keypad.
	White/Red	(fast flash)	Rear boom module fault with module.
	White/Yellow	(fast flash)	Fill station keypad module fault.
	White/Green	(fast flash)	Virtual control active, all keypads deactivated.
APP 3	Blue/Red	(fast flash)	Flush tank calculation error.
	Green/Red	(fast flash)	Main tank calculation error.
	Green	(solid)	All calculations correct.
	Yellow	(fast flash)	No system settings defined (Machine not initialised).
	Yellow/Red	(fast flash)	Tank calibration in progress.

Decal Kit, GA8701569

Decal, Dry Sight Tube

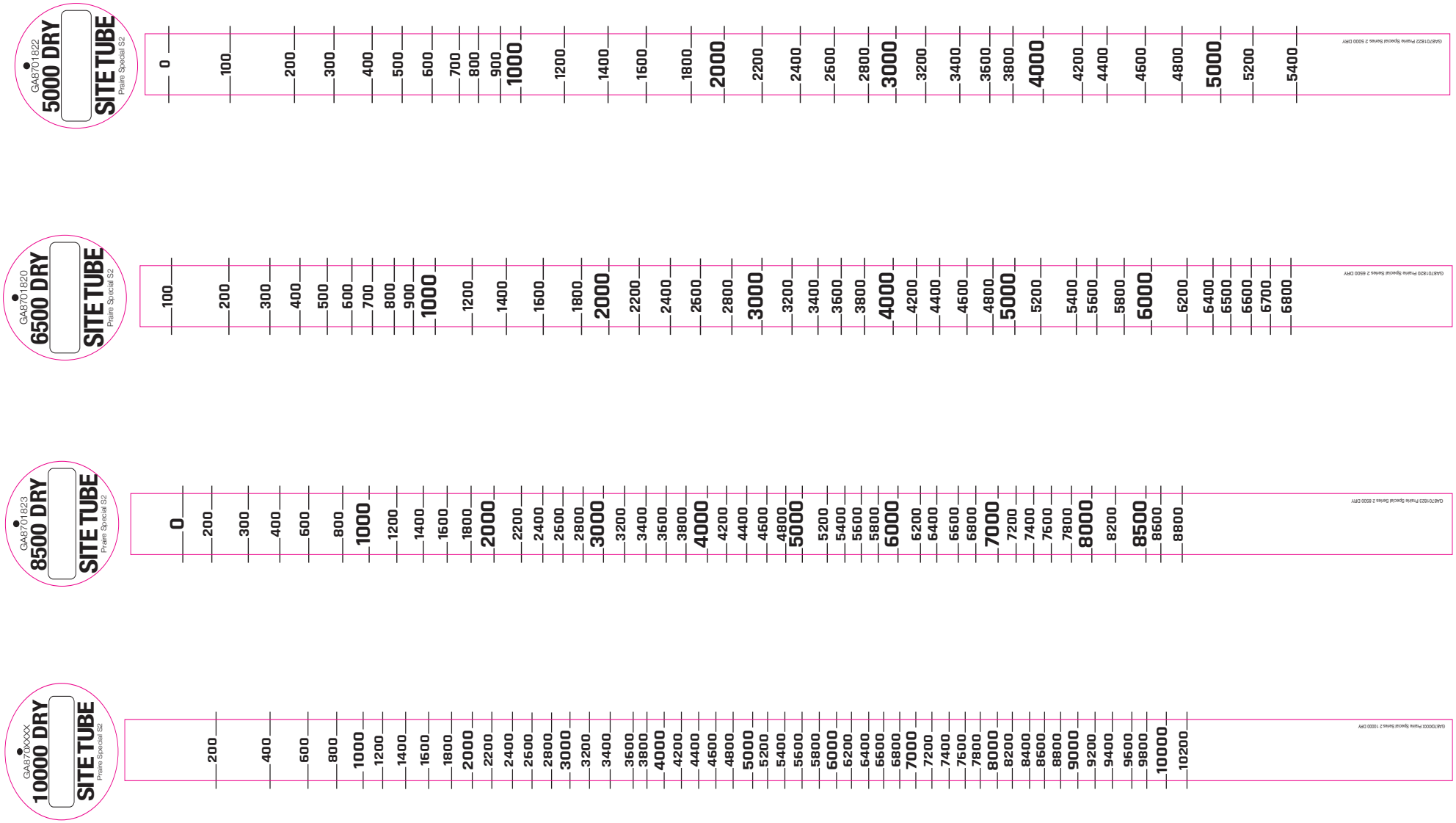

ITEM	PART NUMBER	DESCRIPTION	QTY
-	GA8701599	DECAL, TANK, KIT, 5000L, 24M, PRAIRIE PRO, MY22	-
-	GA8701598	DECAL, TANK, KIT, 5000L, 28M, PRAIRIE PRO, MY22	-
-	GA8701597	DECAL, TANK, KIT, 5000L, 30M, PRAIRIE PRO, MY22	-
-	GA8701596	DECAL, TANK, KIT, 5000L, 33M, PRAIRIE PRO, MY22	-
-	GA8701595	DECAL, TANK, KIT, 5000L, 36M, PRAIRIE PRO, MY22	-
-	GA8701594	DECAL, TANK, KIT, 6500L, 24M, PRAIRIE PRO MY22	-
-	GA8701593	DECAL, TANK, KIT, 6500L, 28M, PRAIRIE PRO, MY22	-
-	GA8701592	DECAL, TANK, KIT, 6500L, 30M, PRAIRIE PRO MY22	-
-	GA8701591	DECAL, TANK, KIT, 6500L, 33M, PRAIRIE PRO, MY22	-
-	GA8701590	DECAL, TANK, KIT, 6500L, 36M, PRAIRIE PRO, MY22	-
-	GA8701589	DECAL, TANK, KIT, 8500L, 30M, PRAIRIE PRO, MY22	-
-	GA8701588	DECAL, TANK, KIT, 8500L, 33M, PRAIRIE PRO, MY22	-
-	GA8701585	DECAL, TANK, KIT, 8500L, 36M, PRAIRIE PRO, MY22	-
-	GA8701586	DECAL, TANK, KIT, 8500L, 48M, PRAIRIE PRO, MY22	-
-	GA8701585	DECAL, TANK, KIT, 10000L, 30M, PRAIRIE PRO, MY22	-
-	GA8701584	DECAL, TANK, KIT, 10000L, 33M, PRAIRIE PRO, MY22	-
-	GA8701583	DECAL, TANK, KIT, 10000L, 36M, PRAIRIE PRO, MY22	-
-	GA8701582	DECAL, TANK, KIT, 10000L, 48M, PRAIRIE PRO, MY22	-

GA7800085 GOLDACRES	TANK DECAL, PRAIRIE PRO, MY22, BILL OF MATERIAL	REV

09 - Electrical

Electrical, Lighting - Boom Tip LED's, RIVX

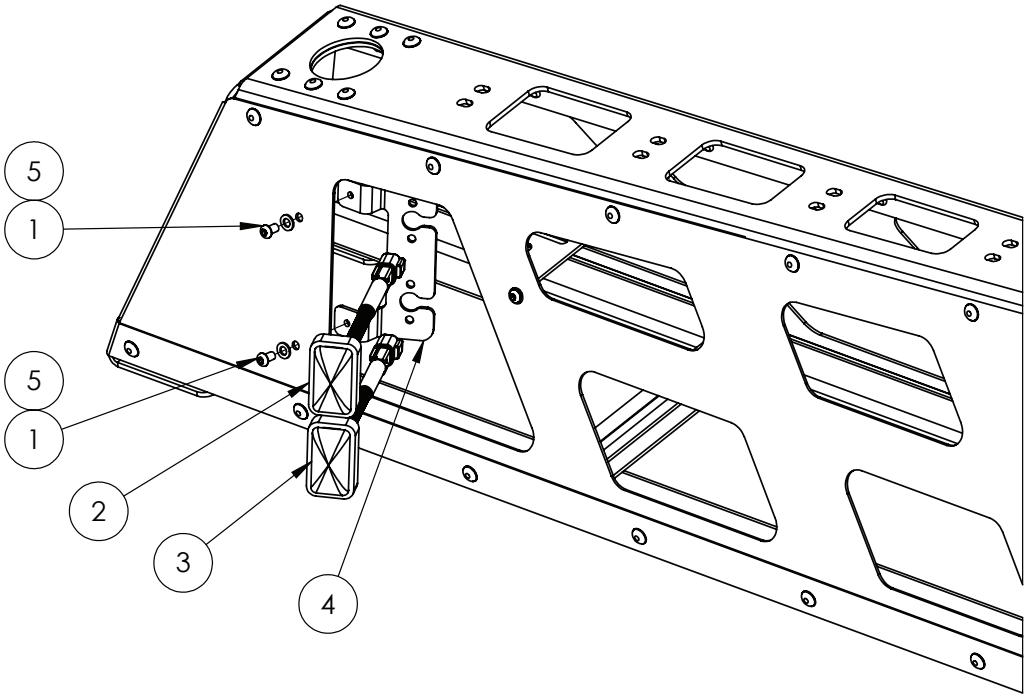

IF DESCRIPTION PREFIX IS ASSEMBLY DRAWING ONLY OR PRODUCTION DRAWING ONLY THE ITEM IS NOT FOR SALE			
ITEM	PART NUMBER	DESCRIPTION	QTY
1	GA5004023	BHCS M6 X 10 SS A2-70	2
2	GA3000267	LIGHT, LED, ORANGE, CLEARANCE, DEUTSCH CONNECTOR	1
3	GA3000266	LIGHT, LED, RED, FENCE, DEUTSCH CONNECTOR	1
4	GA4405610	PLATE, ALUMINIUM BREAKAWAY TIP, LED MOUNT, MY20	1
5	GA5004437	WASHER 6mm FLAT SS	2
GA7800046 GOLDACRES		BOOM WING ASSEMBLY, 36M RH, TRITECH S	REV 00

Electrical, Lighting - Boom Tip LED's, 48mt

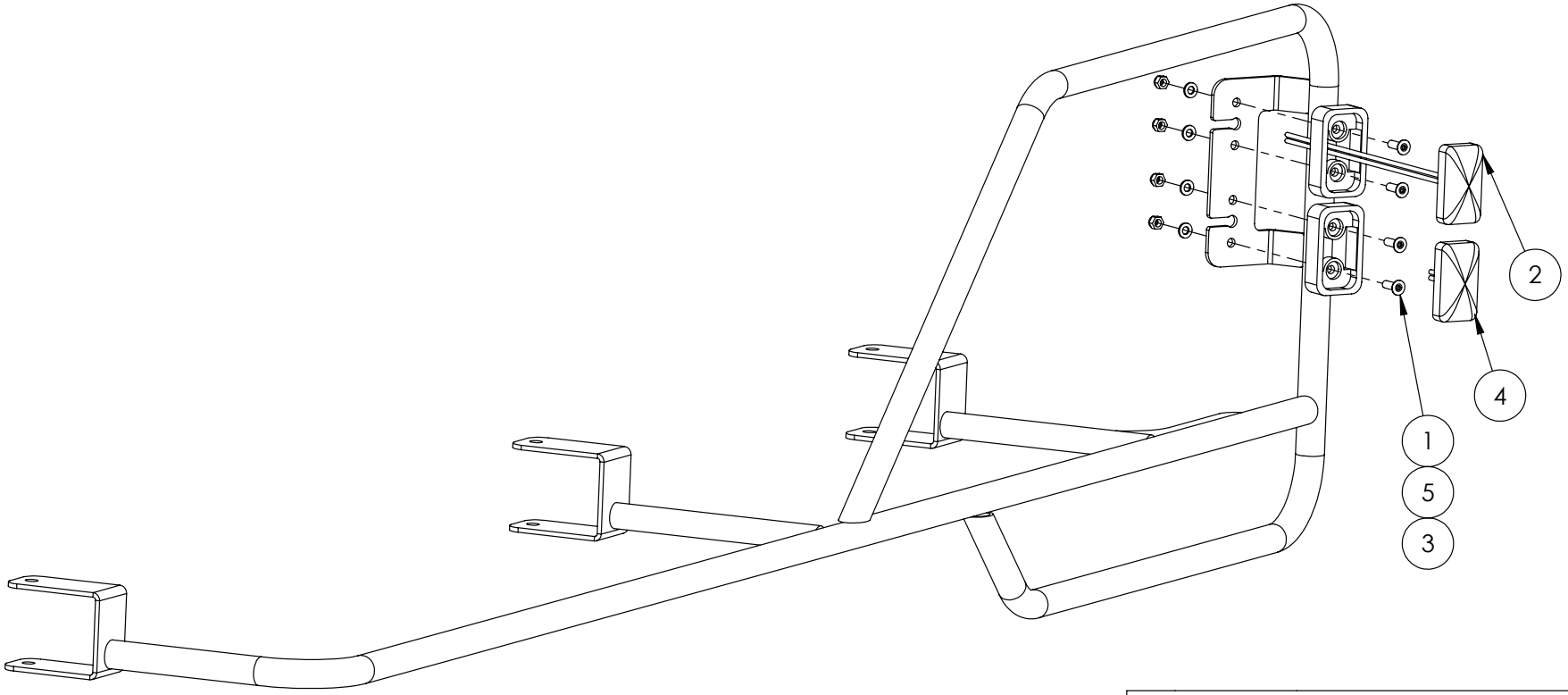

IF DESCRIPTION PREFIX IS ASSEMBLY DRAWING ONLY OR PRODUCTION DRAWING ONLY THE ITEM IS NOT FOR SALE			
ITEM	PART NUMBER	DESCRIPTION	QTY
1	GA5051230	CSCS M5 X 16 SS A2-70	4
2	GA5051345	LIGHT BOOM CLEARANCE LED (ORANGE)	1
3	GA5003974	NUT M5 NYLOC ZP	4
4	GA5075155	RED LED FENCE LINE JET CLEARANCE LIGHT (35RM)	1
5	GA5003983	WASHER 5mm FLAT SS	4
GA7800041 GOLDACRES		BREAKAWAY TIP LIGHITNG, LED's	REV

Beacon, Pre S/N 203934

REPLACEMENT PARTS			
ITEM	PART NUMBER	DESCRIPTION	QTY
-	GA5012093	GLOBE, H1 12V 55W, NARVA	-

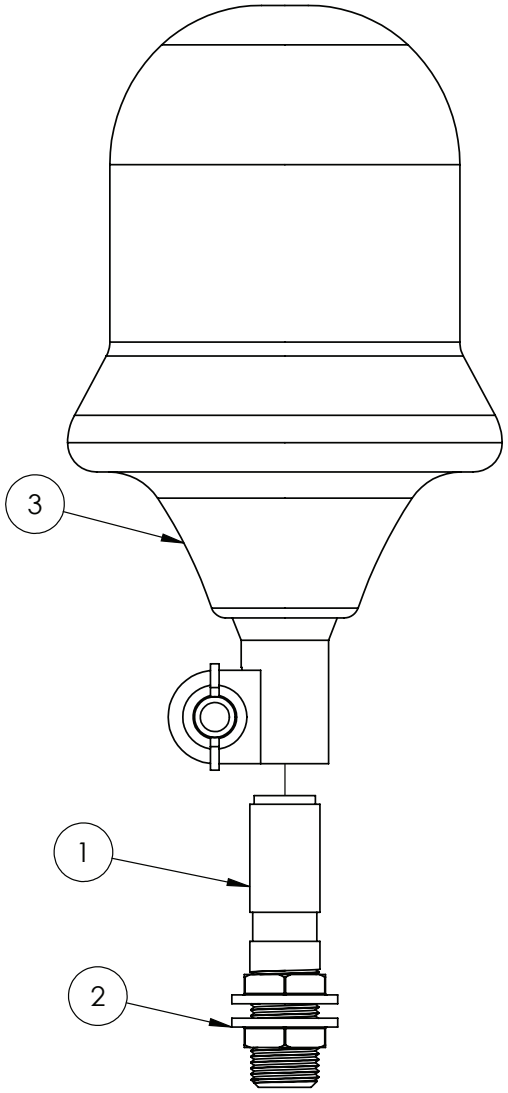

IF DESCRIPTION PREFIX IS ASSEMBLY DRAWING ONLY OR PRODUCTION DRAWING ONLY THE ITEM IS NOT FOR SALE			
ITEM	PART NUMBER	DESCRIPTION	QTY
1	GA5020411	BEACON MOUNT SCREW ON	1
2	NUT	NUT SUPPLIED WITH BEACON POST	2
3	GA5048975	ORANGE BEACON LIGHT	1
GA7800048 GOLDACRES		BEACON, ROTATING, AMBER, DIN A POLE MOUNT, WITH 12V H1 GLOBE	REV 00

Beacon, S/N 203934 Onward

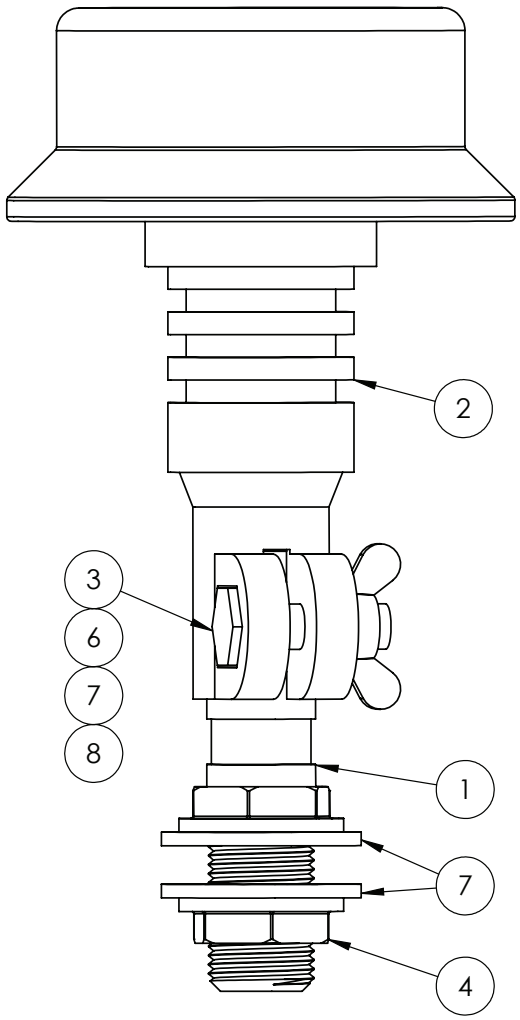

IF DESCRIPTION PREFIX IS ASSEMBLY DRAWING ONLY OR PRODUCTION DRAWING ONLY THE ITEM IS NOT FOR SALE			
ITEM	PART NUMBER	DESCRIPTION	QTY
1	GA5020411	BEACON MOUNT SCREW ON	1
2	GA5048976	BEACON, LED, AMBER, DIN A POLE MOUNT, FLEXIBLE	1
3	GA5006071	BOLT M10 X 40 GR10.9 ZP	1
4	NUT	NUT SUPPLIED WITH BEACON POST	2
5	GA5000127	NUT M10 WING NUT ZP	1
6	GA5000137	WASHER 10mm SPRING SS	1
7	GA5001891	WASHER 24mm FLAT HD SS	2
8	GA5000117	WASHER M10 FLAT SS HD	1
GA7800248 GOLDACRES		ASSEMBLY DRAWING ONLY, BEACON, LED, AMBER WITH INSERT SCREW	REV

Tail Light

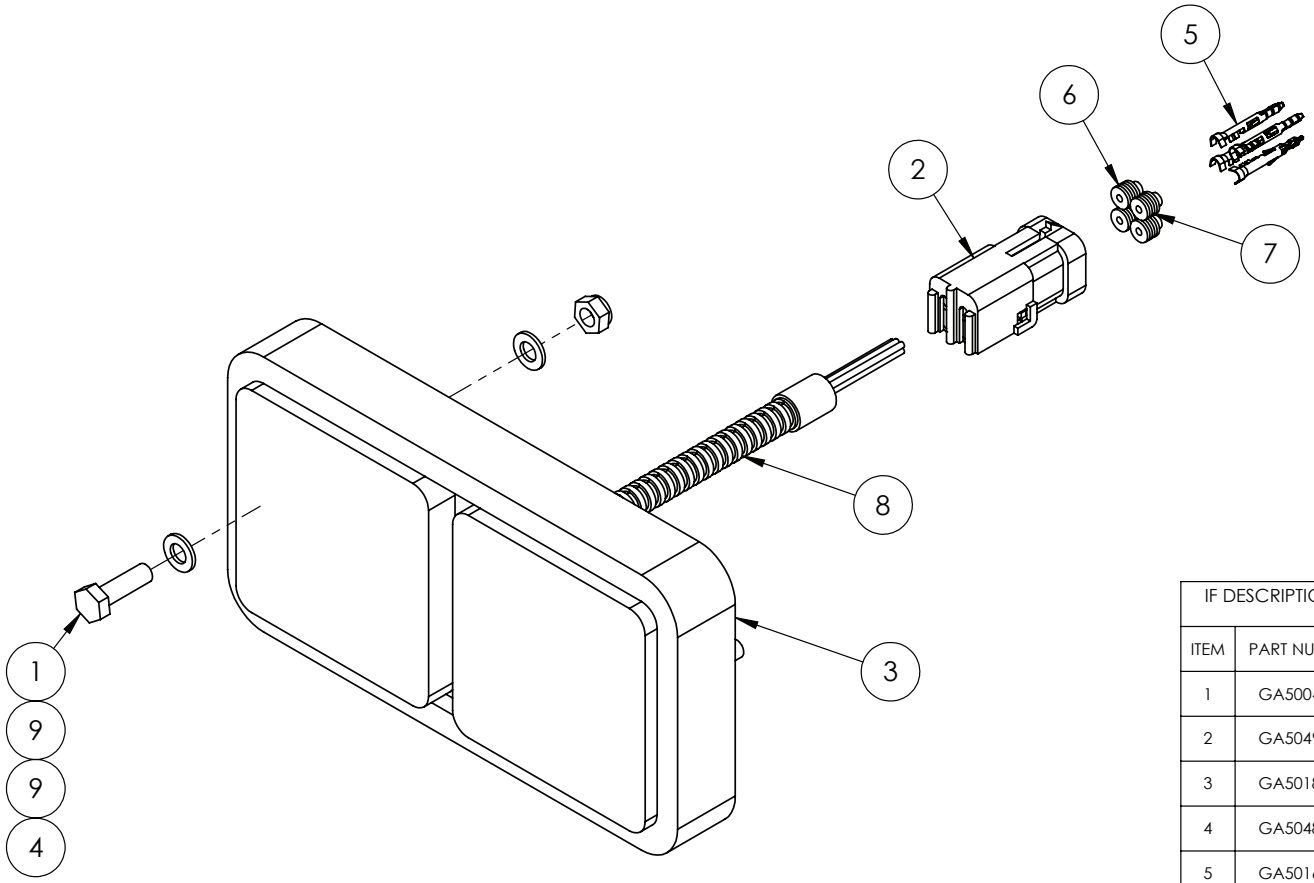

IF DESCRIPTION PREFIX IS ASSEMBLY DRAWING ONLY OR PRODUCTION DRAWING ONLY THE ITEM IS NOT FOR SALE			
ITEM	PART NUMBER	DESCRIPTION	QTY
1	GA5004063	BOLT M6 X 20 SS A-70	2
2	GA5049000	CONNECTOR, FEMALE, 4 PIN, SQUARE, WEATHER PACK	1
3	GA5018786	LAMP, LED, 12V, BRAKE / TAIL LIGHT / INDICATOR, 190 X 100	1
4	GA5048115	NUT M6 NYLOC ZP	2
5	GA5016617	PIN, MALE, SEALED, WEATHER PACK, WIRE 1.0 - 2.0mm	4
6	GA5014855	SEAL FOR WEATHER PACK CONNECTORS (BLUE)	1
7	GA5014857	SEAL FOR WEATHER PACK CONNECTORS (GREEN)	3
8	GA5012161	SPLIT TUBING, 7mm, NARVA, GA5012161 CUT TO FIT	1
9	GA5004437	WASHER 6mm FLAT SS	4
GA3000249 GOLDACRES		LED TAIL LIGHT, LARGE WITH CONNECTOR	REV 00

POD, Work Light

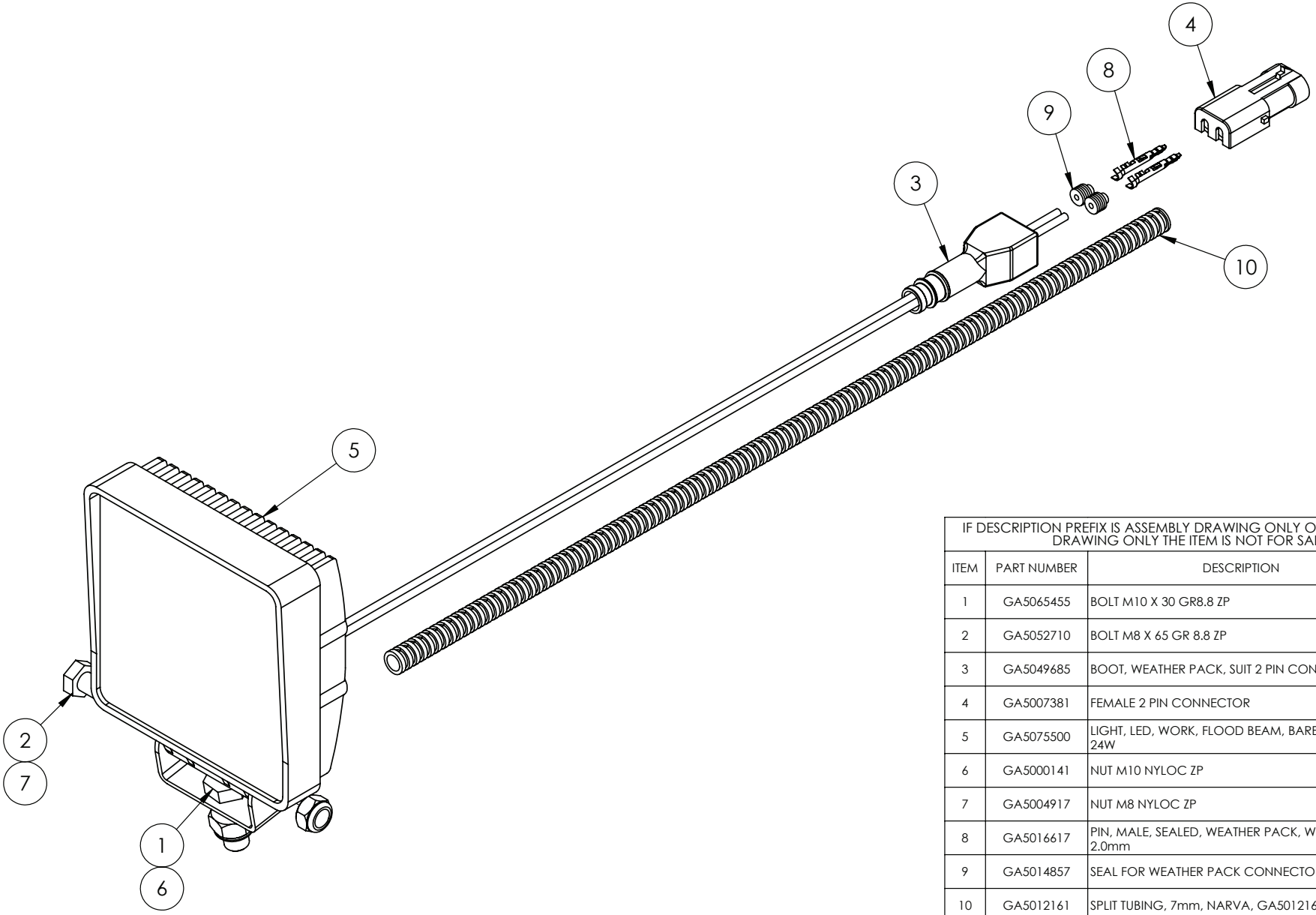

IF DESCRIPTION PREFIX IS ASSEMBLY DRAWING ONLY OR PRODUCTION DRAWING ONLY THE ITEM IS NOT FOR SALE			
ITEM	PART NUMBER	DESCRIPTION	QTY
1	GA5065455	BOLT M10 X 30 GR8.8 ZP	1
2	GA5052710	BOLT M8 X 65 GR 8.8 ZP	1
3	GA5049685	BOOT, WEATHER PACK, SUIT 2 PIN CONNECTOR	1
4	GA5007381	FEMALE 2 PIN CONNECTOR	1
5	GA5075500	LIGHT, LED, WORK, FLOOD BEAM, BARE WIRES, 12V, 24W	1
6	GA5000141	NUT M10 NYLOC ZP	1
7	GA5004917	NUT M8 NYLOC ZP	1
8	GA5016617	PIN, MALE, SEALED, WEATHER PACK, WIRE 1.0 - 2.0mm	2
9	GA5014857	SEAL FOR WEATHER PACK CONNECTORS (GREEN)	2
10	GA5012161	SPLIT TUBING, 7mm, NARVA, GA5012161 CUT TO FIT	1
GA4913495 GOLDACRES		LIGHT, POD WORK LIGHT ASSEMBLY, LED, FLOOD BEAM	REV 02

Camera, Rear View

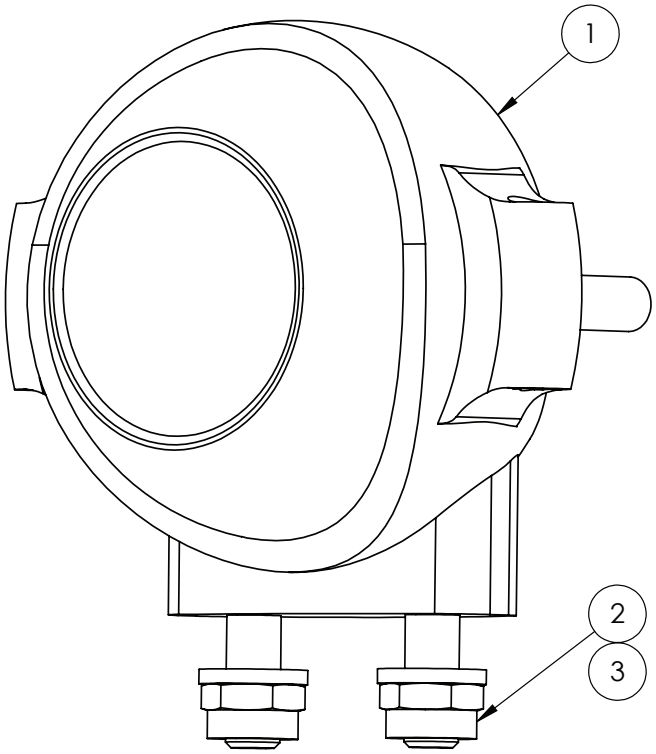

IF DESCRIPTION PREFIX IS ASSEMBLY DRAWING ONLY OR PRODUCTION DRAWING ONLY THE ITEM IS NOT FOR SALE			
ITEM	PART NUMBER	DESCRIPTION	QTY
1	GA3000400	CAMERA, REAR VIEW, IFM O2M203.	1
2	GA5048115	NUT M6 NYLOC ZP	2
3	GA5004437	WASHER 6mm FLAT SS	2
GA3000400 GOLDACRES		CAMERA, REAR VIEW, IFM O2M203.	REV 00

Boom Module

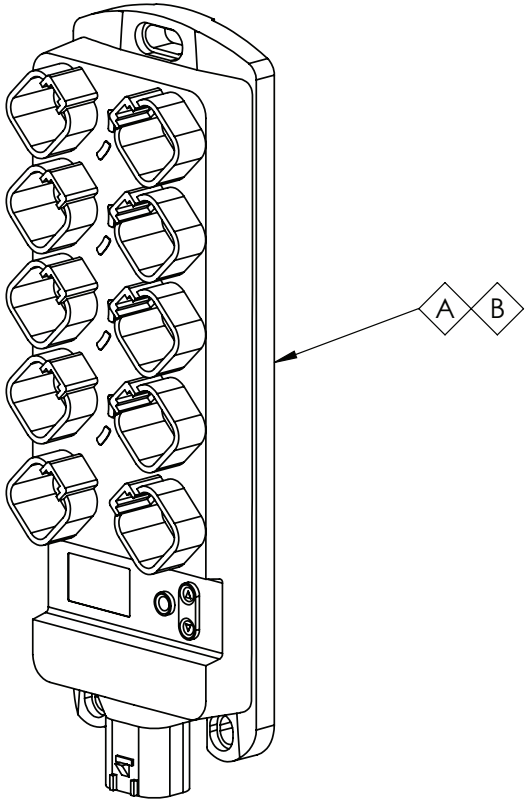

IF DESCRIPTION PREFIX IS ASSEMBLY DRAWING ONLY OR PRODUCTION DRAWING ONLY THE ITEM IS NOT FOR SALE			
ITEM	PART NUMBER	DESCRIPTION	QTY
A	GA3000309	I/O MODULE, 16 OUTPUT CHANNELS, CR2051, IFM, G6, PRAIRIE PRO, BOOM MODULE A	-
B	GA3000310	I/O MODULE, 8 OUTPUT CHANNELS, 8 INPUT CHANNELS, CR2052, IFM, G6, PRAIRIE PRO, BOOM MODULE B	-
GA3000310 GOLDACRES		I/O MODULE, 8 OUTPUT CHANNELS, 8 INPUT CHANNELS, CR2052, IFM, G6 BOOM MODULE B	REV 00

Keypad, CAN, 8 Button

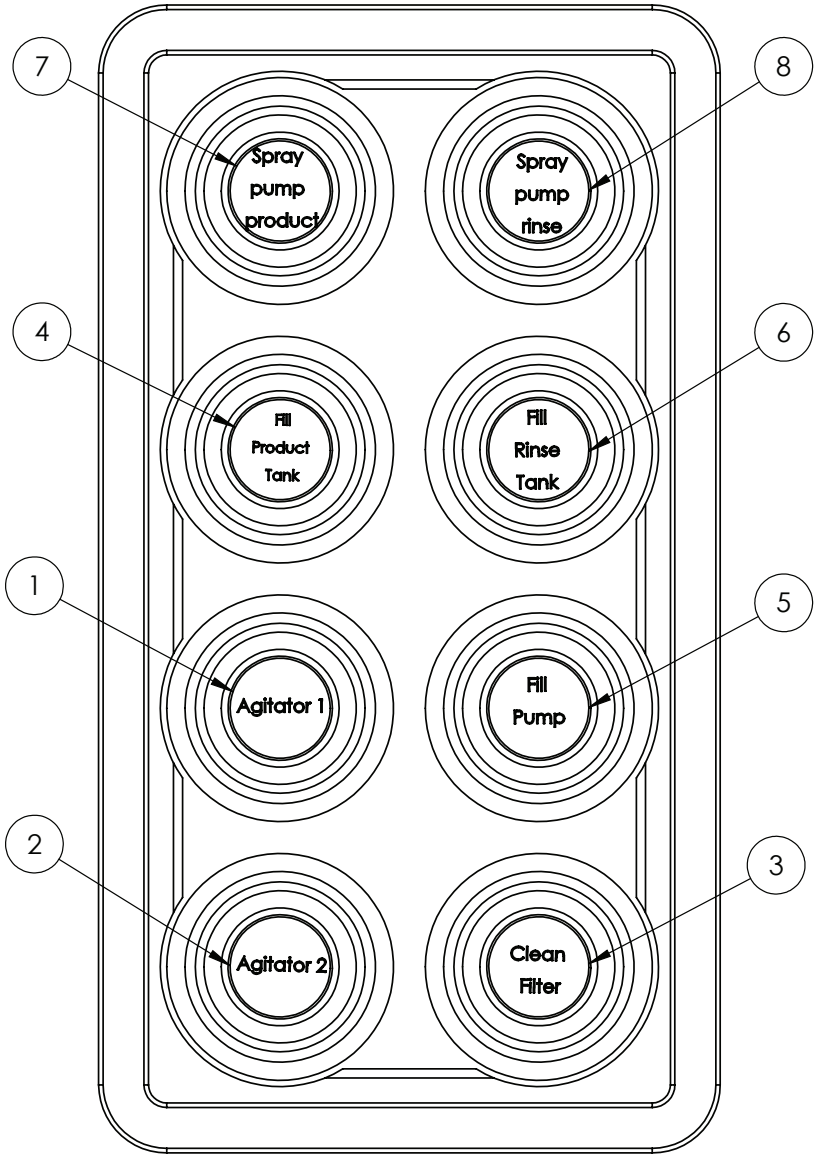

IF DESCRIPTION PREFIX IS ASSEMBLY DRAWING ONLY OR PRODUCTION DRAWING ONLY THE ITEM IS NOT FOR SALE			
ITEM	PART NUMBER	DESCRIPTION	QTY
1	GA3000444	KEYPAD SWITCH INSERT, AGITATOR 1, LASER ETCHED, PRAIRIE MY21	1
2	GA3000445	KEYPAD SWITCH INSERT, AGITATOR 2, LASER ETCHED, PRAIRIE MY21	1
3	GA3000446	KEYPAD SWITCH INSERT, CLEAN FILTER, LASER ETCHED, PRAIRIE MY21	1
4	GA3000441	KEYPAD SWITCH INSERT, FILL PRODUCT TANK, LASER ETCHED, G6 MY20	1
5	GA3000438	KEYPAD SWITCH INSERT, FILL PUMP, LASER ETCHED, G6 MY20	1
6	GA3000437	KEYPAD SWITCH INSERT, FILL RINSE TANK, LASER ETCHED, G6 MY20	1
7	GA3000440	KEYPAD SWITCH INSERT, SPRAY PUMP PRODUCT, LASER ETCHED, G6 MY20	1
8	GA3000436	KEYPAD SWITCH INSERT, SPRAY PUMP RINSE, LASER ETCHED, G6 MY20	1
9	GA3000612	KEYPAD, CAN, 8 BUTTON CANOPEN, DEUTSCH 4 PIN CONNECTOR, BLANK SWITCHES, IFM, PRAIRIE PRO CHASSIS	1
GA4950011 GOLDACRES		CAN KEYPAD ASSEMBLY, 8 WAY, SUIT MY21 PRAIRIE PRO POD	REV 01

Keypad, CAN, 12 Button

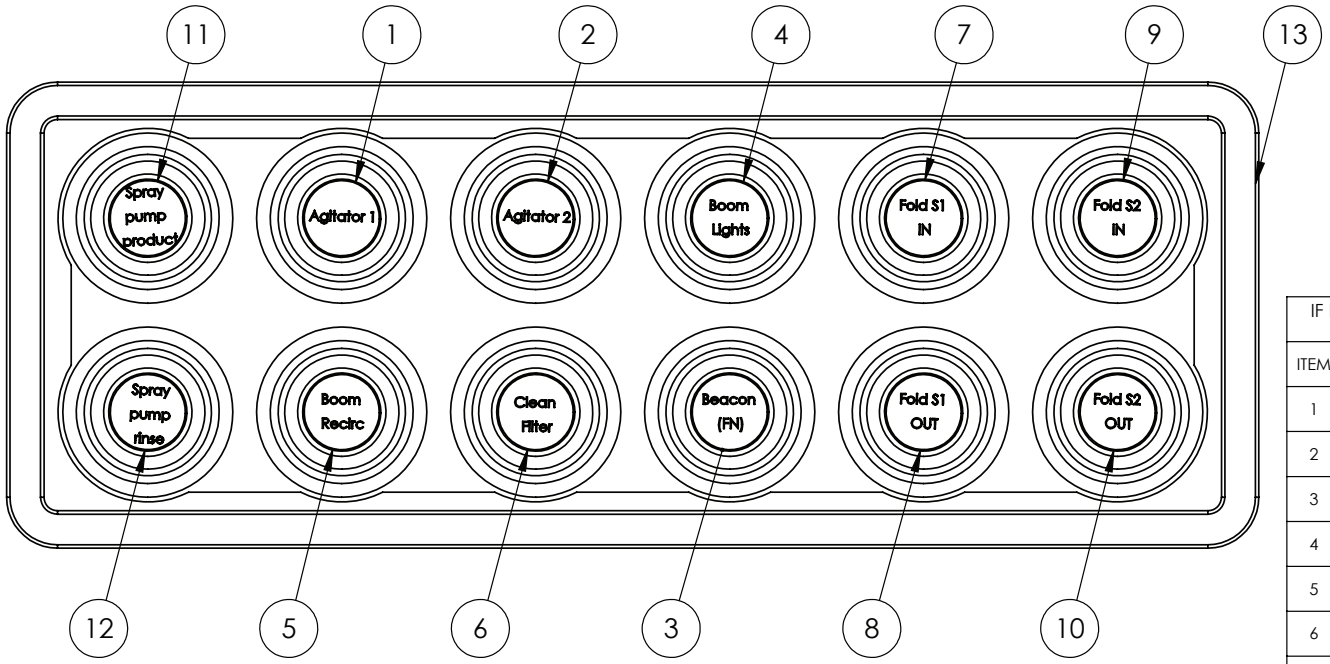

IF DESCRIPTION PREFIX IS ASSEMBLY DRAWING ONLY OR PRODUCTION DRAWING ONLY THE ITEM IS NOT FOR SALE			
ITEM	PART NUMBER	DESCRIPTION	QTY
1	GA3000444	KEYPAD SWITCH INSERT, AGITATOR 1, LASER ETCHED, PRAIRIE MY21	1
2	GA3000445	KEYPAD SWITCH INSERT, AGITATOR 2, LASER ETCHED, PRAIRIE MY21	1
3	GA3000455	KEYPAD SWITCH INSERT, BEACON (FN), LASER ETCHED, PRAIRIE MY21	1
4	GA3000457	KEYPAD SWITCH INSERT, BOOM LIGHTS, LASER ETCHED, PRAIRIE MY21	1
5	GA3000456	KEYPAD SWITCH INSERT, BOOM RECIRC, LASER ETCHED, PRAIRIE MY21	1
6	GA3000446	KEYPAD SWITCH INSERT, CLEAN FILTER, LASER ETCHED, PRAIRIE MY21	1
7	GA3000458	KEYPAD SWITCH INSERT, FOLD S1 IN, LASER ETCHED, PRAIRIE MY21	1
8	GA3000459	KEYPAD SWITCH INSERT, FOLD S1 OUT, LASER ETCHED, PRAIRIE MY21	1
9	GA3000460	KEYPAD SWITCH INSERT, FOLD S2 IN, LASER ETCHED, PRAIRIE MY21	1
10	GA3000461	KEYPAD SWITCH INSERT, FOLD S2 OUT, LASER ETCHED, PRAIRIE MY21	1
11	GA3000440	KEYPAD SWITCH INSERT, SPRAY PUMP PRODUCT, LASER ETCHED, G6 MY20	1
12	GA3000436	KEYPAD SWITCH INSERT, SPRAY PUMP RINSE, LASER ETCHED, G6 MY20	1
13	GA3000500	KEYPAD, CAN, 8 BUTTON CANOPEN, DEUTSCH 4 PIN CONNECTOR, BLANK SWITCHES IFM	1
GA4950013 GOLDACRES		CAN KEYPAD ASSEMBLY, 12 WAY, SUIT MY21 PRAIRIE NON 48M BOOM	REV 01

Keypad, CAN, 16 Button

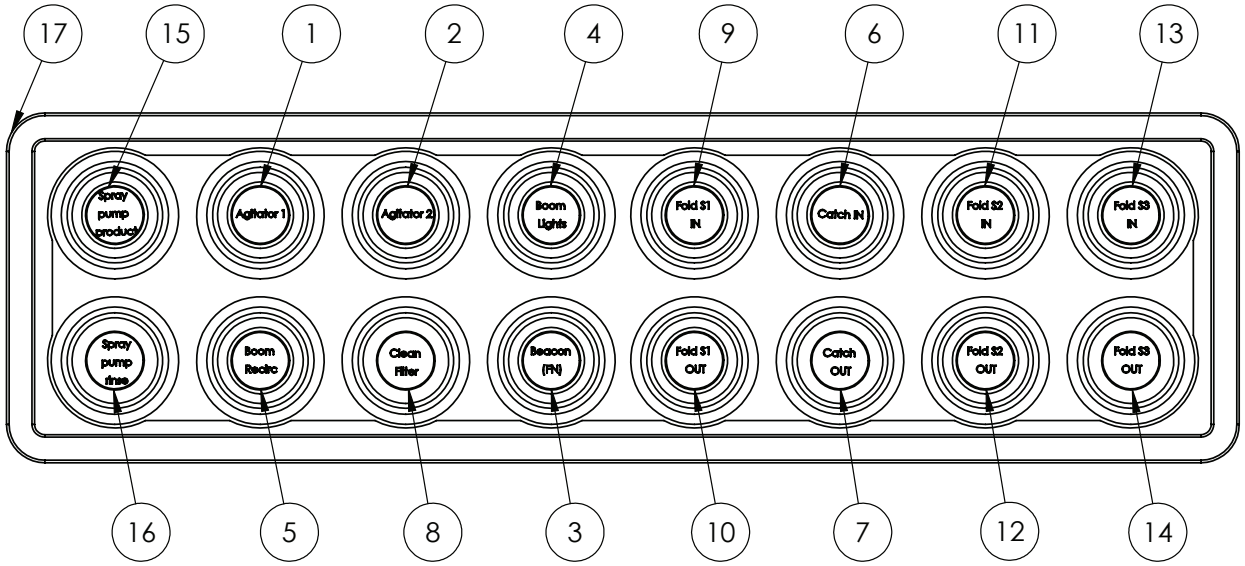

IF DESCRIPTION PREFIX IS ASSEMBLY DRAWING ONLY OR PRODUCTION DRAWING ONLY THE ITEM IS NOT FOR SALE			
ITEM	PART NUMBER	DESCRIPTION	QTY
1	GA3000444	KEYPAD SWITCH INSERT, AGITATOR 1, LASER ETCHED, PRAIRIE MY21	1
2	GA3000445	KEYPAD SWITCH INSERT, AGITATOR 2, LASER ETCHED, PRAIRIE MY21	1
3	GA3000455	KEYPAD SWITCH INSERT, BEACON (FN), LASER ETCHED, PRAIRIE MY21	1
4	GA3000457	KEYPAD SWITCH INSERT, BOOM LIGHTS, LASER ETCHED, PRAIRIE MY21	1
5	GA3000456	KEYPAD SWITCH INSERT, BOOM RECIRC, LASER ETCHED, PRAIRIE MY21	1
6	GA3000464	KEYPAD SWITCH INSERT, CATCH IN, LASER ETCHED, PRAIRIE MY21	1
7	GA3000465	KEYPAD SWITCH INSERT, CATCH OUT, LASER ETCHED, PRAIRIE MY21	1
8	GA3000446	KEYPAD SWITCH INSERT, CLEAN FILTER, LASER ETCHED, PRAIRIE MY21	1
9	GA3000458	KEYPAD SWITCH INSERT, FOLD S1 IN, LASER ETCHED, PRAIRIE MY21	1
10	GA3000459	KEYPAD SWITCH INSERT, FOLD S1 OUT, LASER ETCHED, PRAIRIE MY21	1
11	GA3000460	KEYPAD SWITCH INSERT, FOLD S2 IN, LASER ETCHED, PRAIRIE MY21	1
12	GA3000461	KEYPAD SWITCH INSERT, FOLD S2 OUT, LASER ETCHED, PRAIRIE MY21	1
13	GA3000462	KEYPAD SWITCH INSERT, FOLD S3 IN, LASER ETCHED, PRAIRIE MY21	1
14	GA3000463	KEYPAD SWITCH INSERT, FOLD S3 OUT, LASER ETCHED, PRAIRIE MY21	1
15	GA3000440	KEYPAD SWITCH INSERT, SPRAY PUMP PRODUCT, LASER ETCHED, G6 MY20	1
16	GA3000436	KEYPAD SWITCH INSERT, SPRAY PUMP RINSE, LASER ETCHED, G6 MY20	1
17	GA3000501	KEYPAD, CAN, 8 BUTTON CANOPEN, DEUTSCH 4 PIN CONNECTOR, BLANK SWITCHES IFM	1
GA4950014 GOLDACRES		CAN KEYPAD ASSEMBLY, 16 WAY, SUIT MY21 PRAIRIE 48M BOOM	REV 01

Keypad, Cabin Mount Assembly, 8 Button

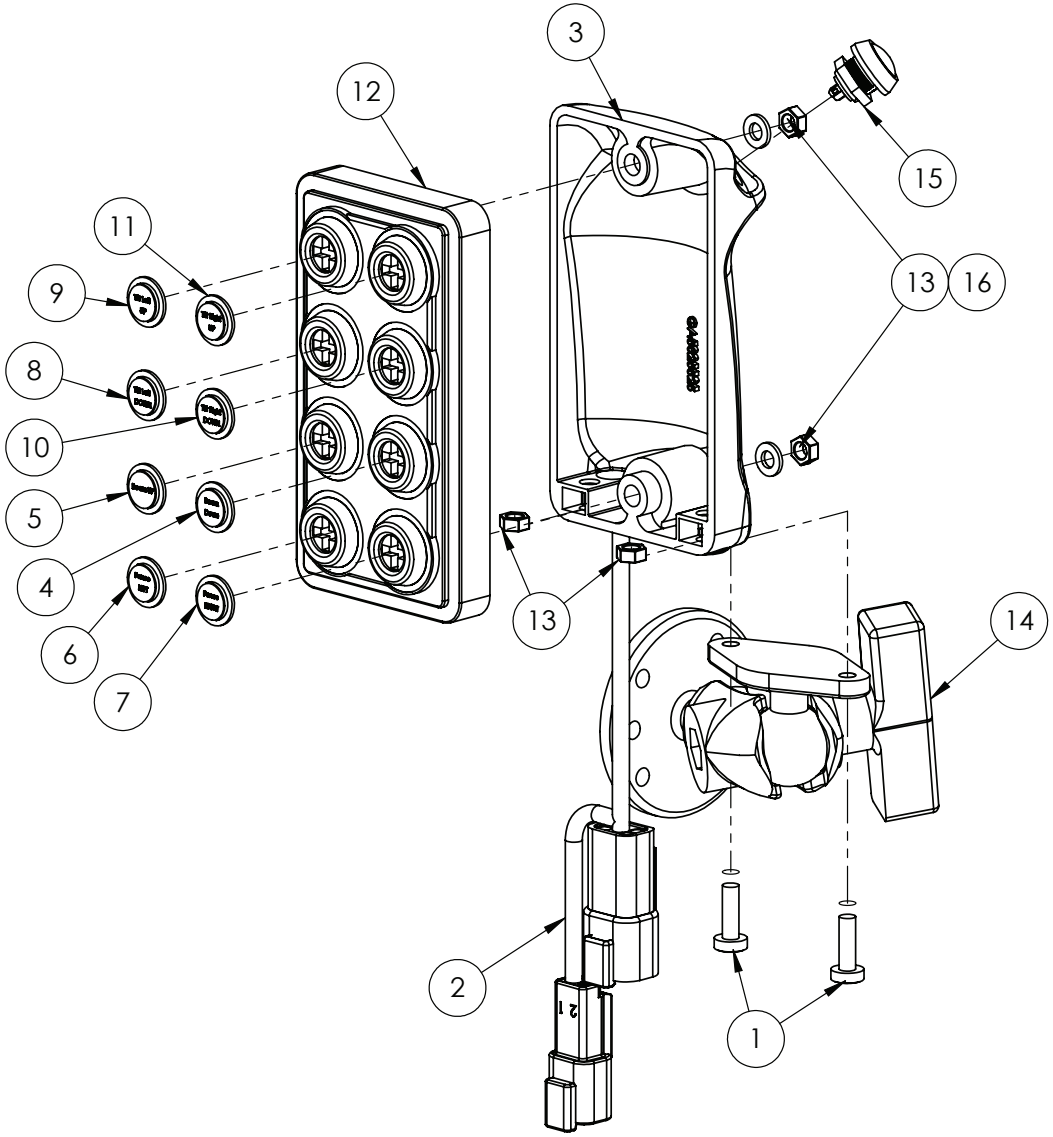

IF DESCRIPTION PREFIX IS ASSEMBLY DRAWING ONLY OR PRODUCTION DRAWING ONLY THE ITEM IS NOT FOR SALE			
ITEM	PART NUMBER	DESCRIPTION	QTY
1	GA5003977	BOLT PAN HEAD M5 X 16 SS A2-70	2
2	GA3000804	ELECTRICAL HARNESS, PRAIRIE PRO MY21, BOOM MASTER SWITCH	1
3	GA5025525	JOYSTICK HOUSING TO SUIT 8 BUTTON CAN KEYPAD, MY21	1
4	GA3000452	KEYPAD SWITCH INSERT, BOOM DOWN, LASER ETCHED, PRAIRIE MY21	1
5	GA3000451	KEYPAD SWITCH INSERT, BOOM UP, LASER ETCHED, PRAIRIE MY21	1
6	GA3000453	KEYPAD SWITCH INSERT, FENCE LEFT, LASER ETCHED, PRAIRIE MY21	1
7	GA3000454	KEYPAD SWITCH INSERT, FENCE RIGHT, LASER ETCHED, PRAIRIE MY21	1
8	GA3000448	KEYPAD SWITCH INSERT, TILT LEFT DOWN, LASER ETCHED, PRAIRIE MY21	1
9	GA3000447	KEYPAD SWITCH INSERT, TILT LEFT UP, LASER ETCHED, PRAIRIE MY21	1
10	GA3000450	KEYPAD SWITCH INSERT, TILT RIGHT DOWN, LASER ETCHED, PRAIRIE MY21	1
11	GA3000449	KEYPAD SWITCH INSERT, TILT RIGHT UP, LASER ETCHED, PRAIRIE MY21	1
12	GA3000611	KEYPAD, CAN, 8 BUTTON CANOPEN, DEUTSCH 4 PIN CONNECTOR, BLANK SWITCHES, IFM, PRAIRIE PRO CAB	1
13	GA5069695	NUT M5 ZP	4
14	GA5068930	RAM MOUNT, UNIVERSAL, ADJUSTABLE, B SIZE 1" BALL, 5" LENGTH, RAM-B-138U	1
15	GA3000803	SWITCH, DOME PUSH BUTTON, MOMENTARY N/O, BLACK	1
16	GA5003983	WASHER 5mm FLAT SS	2
GA4950012 GOLDACRES		CAN KEYPAD ASSEMBLY, 8 WAY JOYSTICK WITH BASE, SUIT MY21 PRAIRIE PRO CABIN	REV 00

Keypad & Mount, CAN, 12 & 16 Button

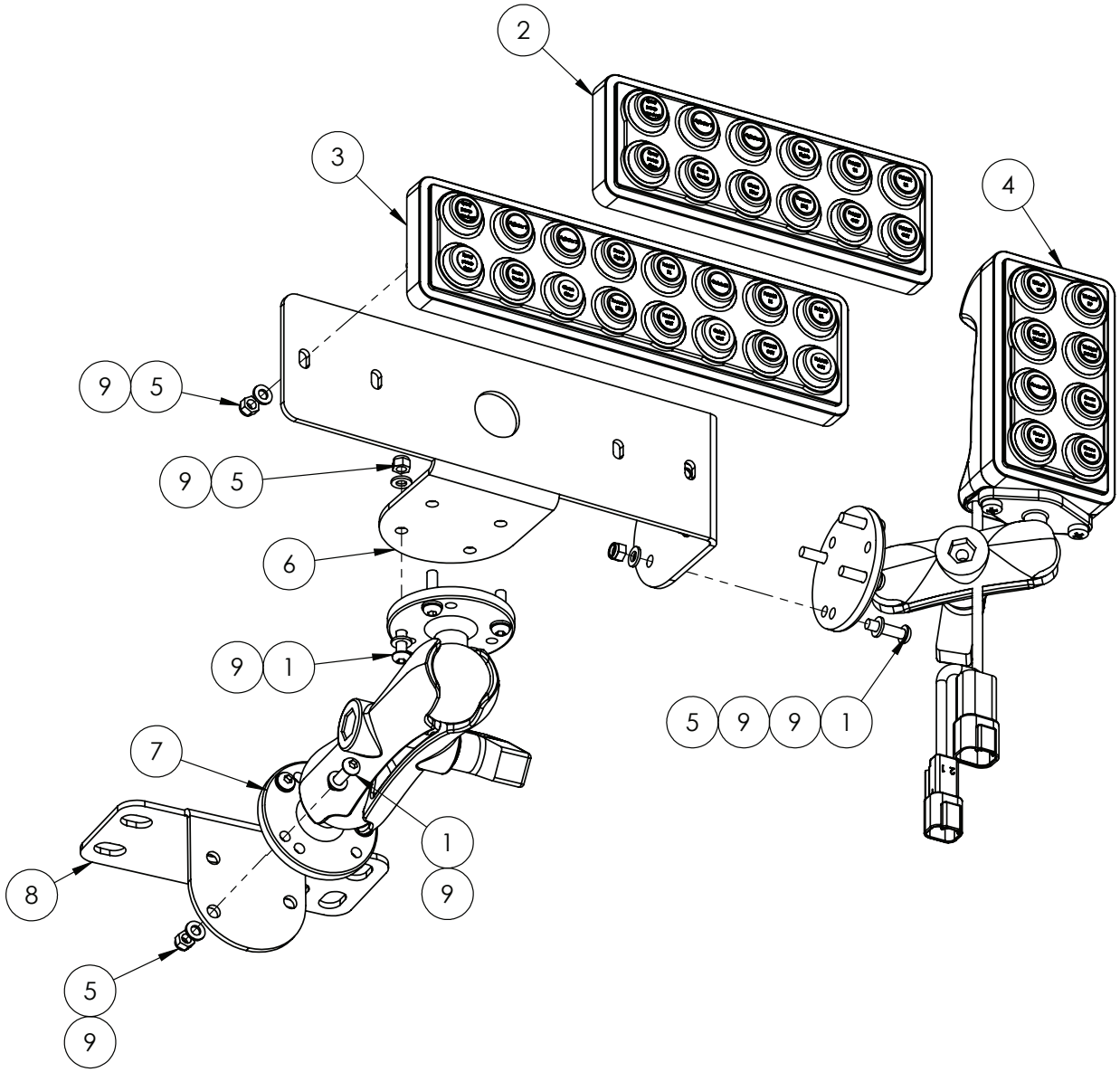

IF DESCRIPTION PREFIX IS ASSEMBLY DRAWING ONLY OR PRODUCTION DRAWING ONLY THE ITEM IS NOT FOR SALE			
ITEM	PART NUMBER	DESCRIPTION	QTY
1	GA0500004	BHCS M5 X 20 SS A2-70	11
2	GA4950013	CAN KEYPAD ASSEMBLY, 12 WAY, SUIT MY21 PRAIRIE NON 48M BOOM	1
3	GA4950014	CAN KEYPAD ASSEMBLY, 16 WAY, SUIT MY21 PRAIRIE 48M BOOM	1
4	GA4950012	CAN KEYPAD ASSEMBLY, 8 WAY JOYSTICK WITH BASE, SUIT MY21 PRAIRIE PRO CABIN	1
5	GA5003974	NUT M5 NYLOC ZP	13
6	GA4412125	PLATE, CAB CONTROLS MOUNING BRACKET, WITHOUT 12" SCREEN, PRAIRIE PRO, S2	1
7	GA5020825	RAM MOUNT	1
8	GA4522930	TRACTOR CONTROLLER RAM MOUNT BRACKET	1
9	GA5003983	WASHER 5mm FLAT SS	24
GA4951300 GOLDACRES		ASSEMBLY DRAWING ONLY, CABIN ELECTRONICS, NOT INCLUDING 12" SCREEN, PRAIRIE PRO, SERIES 2	REV 00

Display Screen, 12” Touch

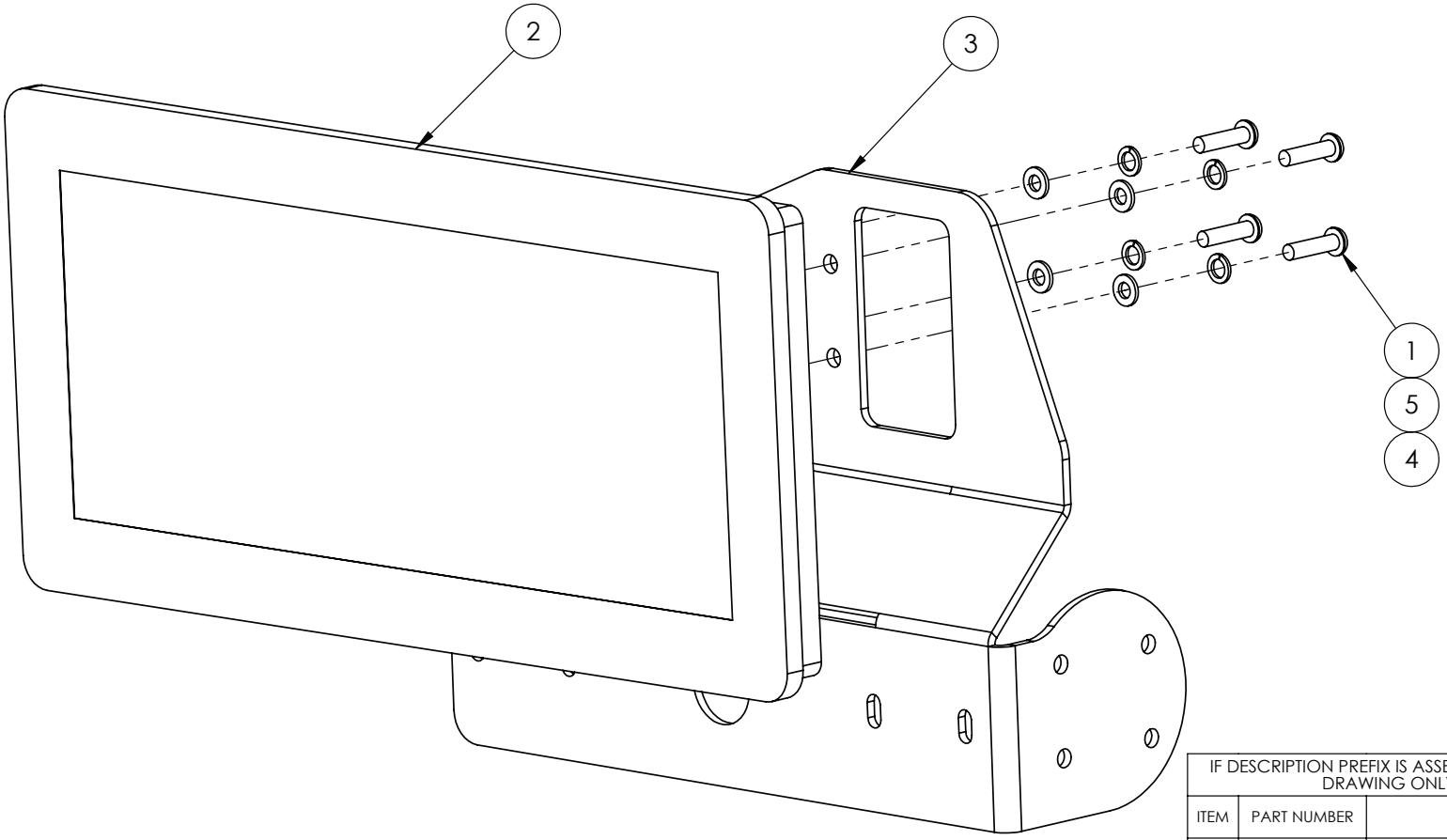

IF DESCRIPTION PREFIX IS ASSEMBLY DRAWING ONLY OR PRODUCTION DRAWING ONLY THE ITEM IS NOT FOR SALE			
ITEM	PART NUMBER	DESCRIPTION	QTY
1	GA0500004	BHCS M5 X 20 SS A2-70	4
2	GA3000621	DISPLAY SCREEN, 12", TOUCH, CR1203, IFM, PRAIRE PRO	1
3	GA4412130	PLATE, CAB CONTROLS MOUNING BRACKET, WITH 12" SCREEN, PRAIRIE PRO, S2	1
4	GA5003983	WASHER 5mm FLAT SS	4
5	GA5003629	WASHER 5mm SPRING SS	4
GA7800094 GOLDACRES		DISPLAY SCREEN, 12", TOUCH, IFM, PRAIRIE PRO	REV 00

Fuse Box, Chassis

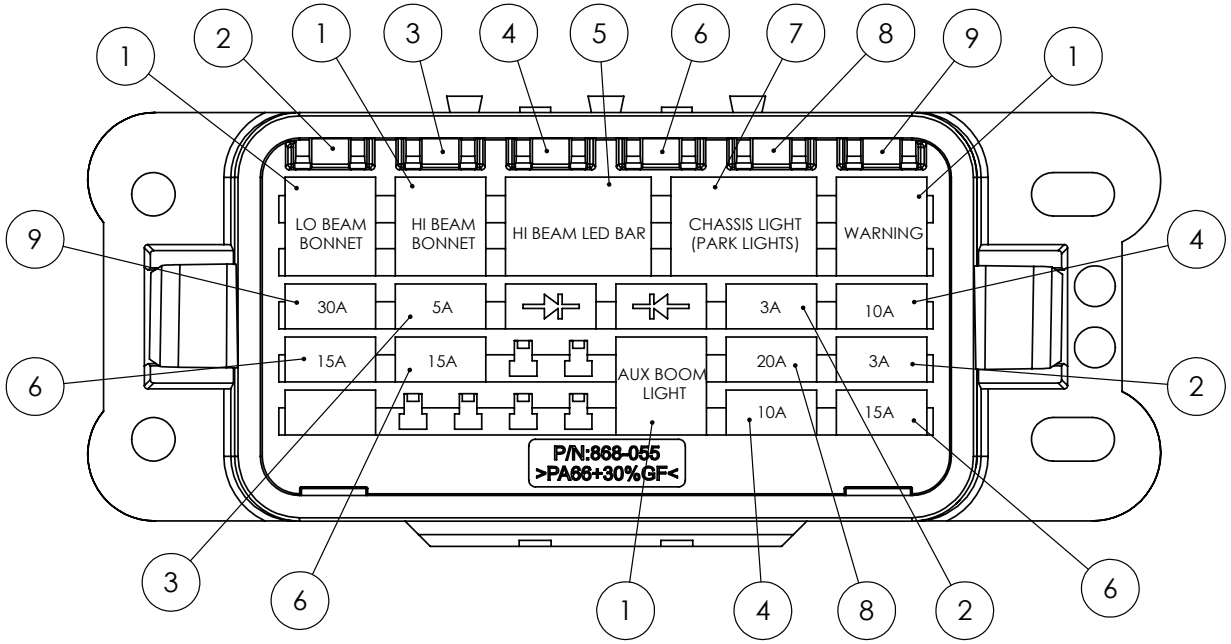

IF DESCRIPTION PREFIX IS ASSEMBLY DRAWING ONLY OR PRODUCTION DRAWING ONLY THE ITEM IS NOT FOR SALE			
ITEM	PART NUMBER	DESCRIPTION	QTY
1	GA5075035	RELAY, ULTRA MICRO ISO280, 4 PIN SQUARE, SPST, 12V 20A	1
2	GA3000395	FUSE, MINI BLADE, 3 AMP, 52703	1
3	GA3000396	FUSE, MINI BLADE, 5 AMP, 52705	1
4	GA5052510	FUSE MINI BLADE 10 AMP (52710)	1
5	GA5075030	RELAY, ULTRA MICRO ISO280, 5 PIN, SPST, 12V 20A	1
6	GA5052515	FUSE MINI BLADE 15 AMP (52715)	1
7	GA5075030	RELAY, ULTRA MICRO ISO280, 5 PIN, SPST, 12V 20A	1
8	GA5052520	FUSE MINI BLADE 20 AMP (52720)	1
9	GA5054865	FUSE MINI BLADE 30 AMP (52730)	1
GA3000287 GOLDACRES		FUSE BOX, MINI FUSE, 60 TERMINAL, BLANK, IP68, LITTELFUSE, PDM71003ZXM	REV

7 Pin Trailer Plug

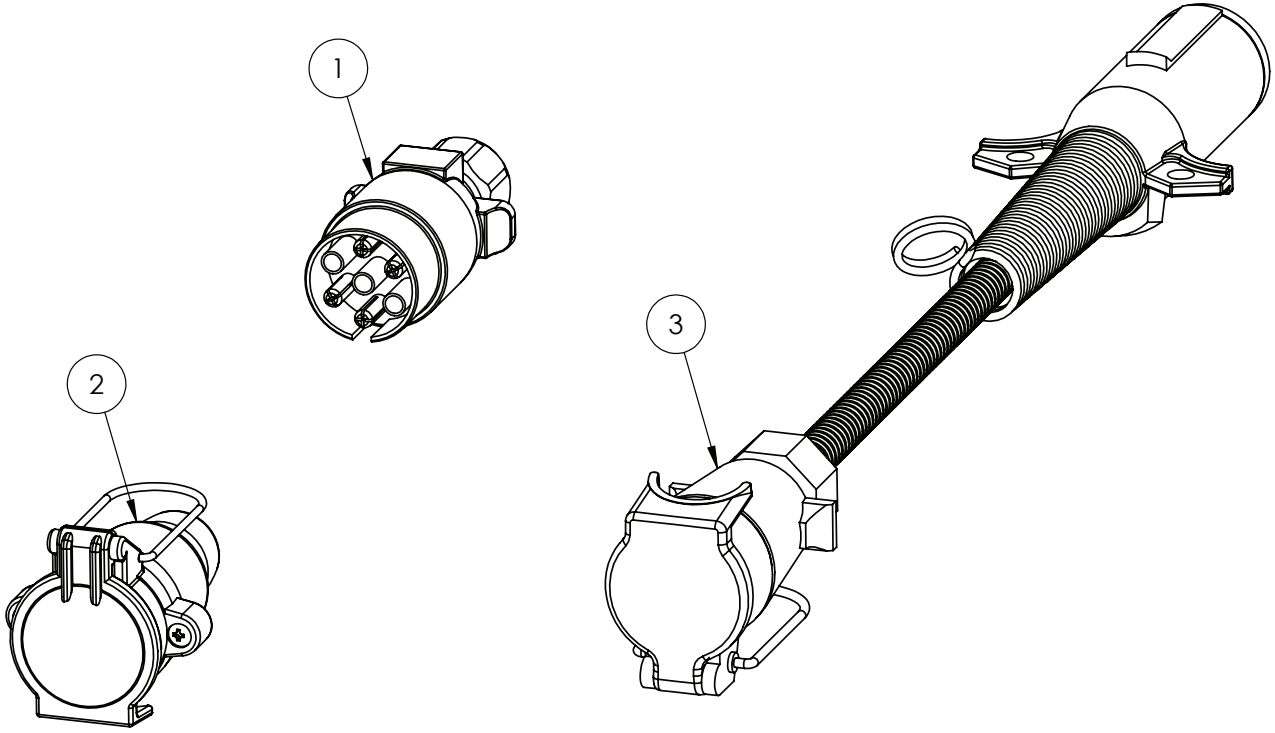

IF DESCRIPTION PREFIX IS ASSEMBLY DRAWING ONLY OR PRODUCTION DRAWING ONLY THE ITEM IS NOT FOR SALE			
ITEM	PART NUMBER	DESCRIPTION	QTY
1	GA5004477	ELECTRICAL CONNECTOR, PLUG, 7 PIN TRAILER, MALE, PLASTIC	1
2	GA5004479	ELECTRICAL CONNECTOR, PLUG, 7 PIN TRAILER, MALE, PLASTIC	1
3	GA5060350	ELECTRICAL CONNECTOR, PLUG, 7 PIN TRAILER, MALE, PLASTIC	1
GA7800042 GOLDACRES		ELECTRICAL COMPONENTS, 7 PIN PLUG	REV 00

ISO, Electrical Connectors

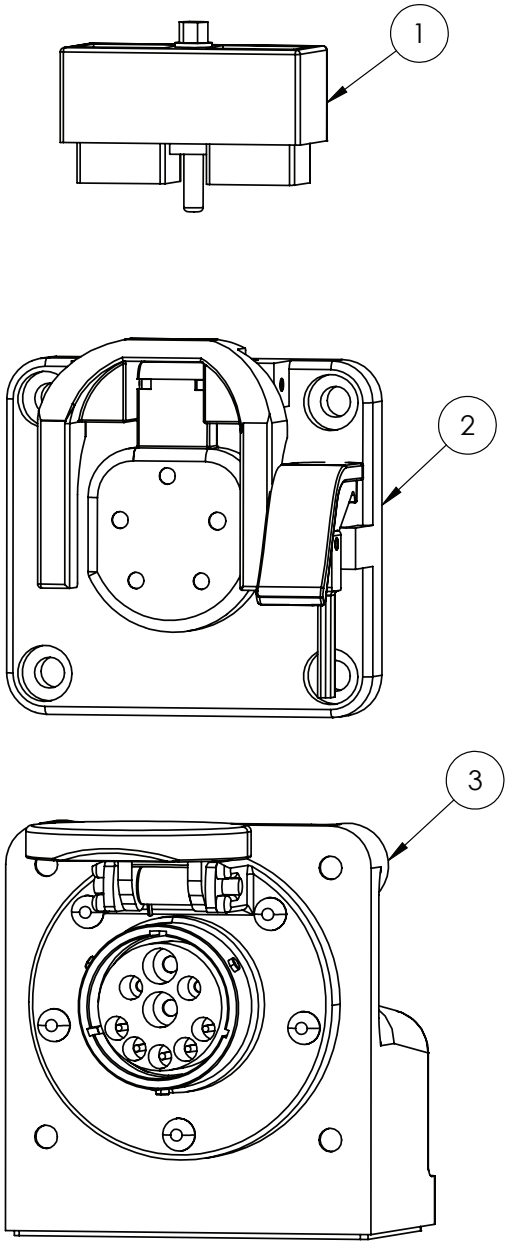

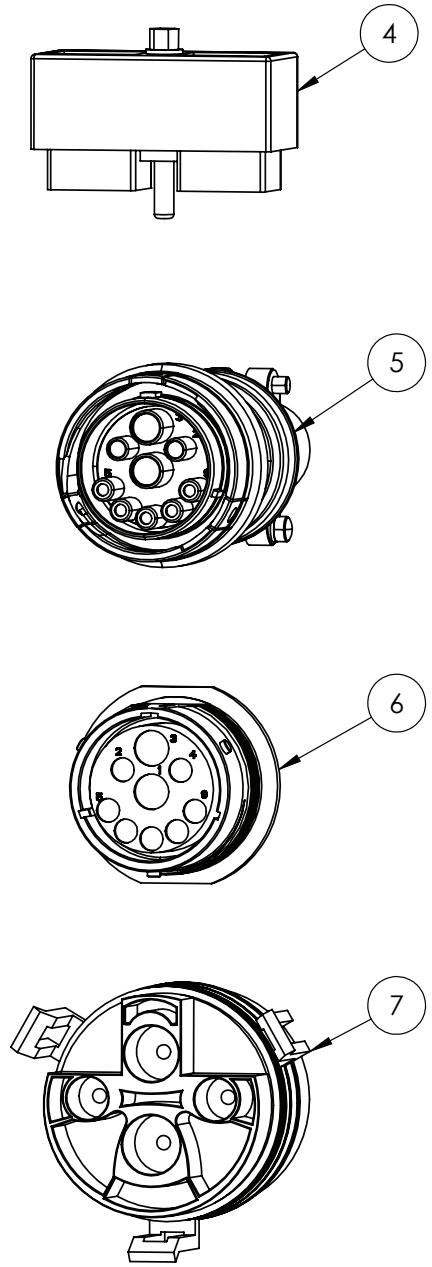

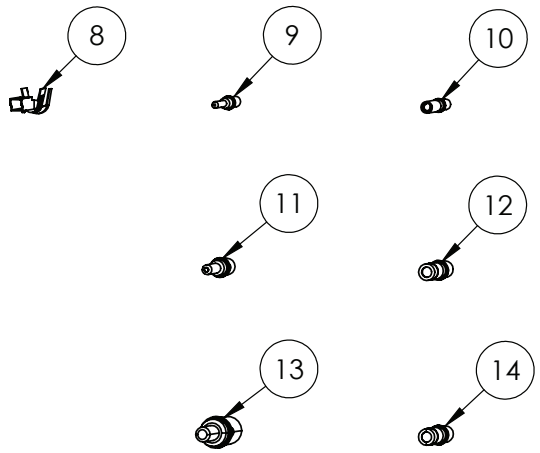

IF DESCRIPTION PREFIX IS ASSEMBLY DRAWING ONLY OR PRODUCTION DRAWING ONLY THE ITEM IS NOT FOR SALE			
ITEM	PART NUMBER	DESCRIPTION	QTY
1	GA3001152	ELECTRICAL CONNECTOR, CINCH, 30 WAY, A-K, SUIT PC1 ISO NODE, 581-01-30-029	1
2	GA3000872	ELECTRICAL CONNECTOR, ISO BUS, 11783-2, 9 PIN, BOX, IBBC BREAKAWAY 408-4002-131	1
3	GA3000870	ELECTRICAL CONNECTOR, ISO BUS, 9 PIN, HDB36-24-91SE-059	1
4	GA3001153	ELECTRICAL CONNECTOR, CINCH, 30 WAY, L-Y, SUIT PC1 ISO NODE, 581-01-30-028	1
5	GA5061225	SOCKET, FEMALE, SOLID GOLD, NUMBER 16, DEUTSCH	1
6	GA5061260	PIN, MALE, SOLID, NICKEL, NUMBER 12, DEUTSCH	1
7	GA5061220	PIN, MALE, GOLD, NUMBER 16, DEUTSCH	1
8	GA5061370	CINCH TERMINAL FEMALE 16-18AWG, 425-00-00-873	1
9	GA5061270	SOCKET, FEMALE, SOLID, NICKEL, NUMBER 12, DEUTSCH	1
10	GA3000873	ELECTRICAL CONNECTOR, ISO BUS, 4P PLUG IBRC SUIT GA3000872, 14084002132	1
11	GA3000876	PIN, MALE, SOLID, NICKEL, NUMBER 8, DEUTSCH, 0460-204-08141	1
12	GA3000877	SOCKET, FEMALE, SOLID, NICKEL, 8-10 AWG, DEUTSCH, 0462-203-08141	1
13	GA3000875	ELECTRICAL CONNECTOR, ISO BUS, 9 PIN, CABLE MOUNT HD34-24-91PN	1
14	GA3000874	ELECTRICAL CONNECTOR, ISO BUS, 11783-2, 9 PIN, BOX, JD STYLE, IBBC HDBOX-24-91PN	1
-	GA5052840	SEALING PLUG, BLANKING PIN, WHITE, SIZE 12 - 16, DEUTSCH	-
GA7800082 GOLDACRES		ELECTRICAL CONNECTORS, ISO BUS, DEUTSCH + RAVEN	REV 00

Raven, RCM & XRT Plugs

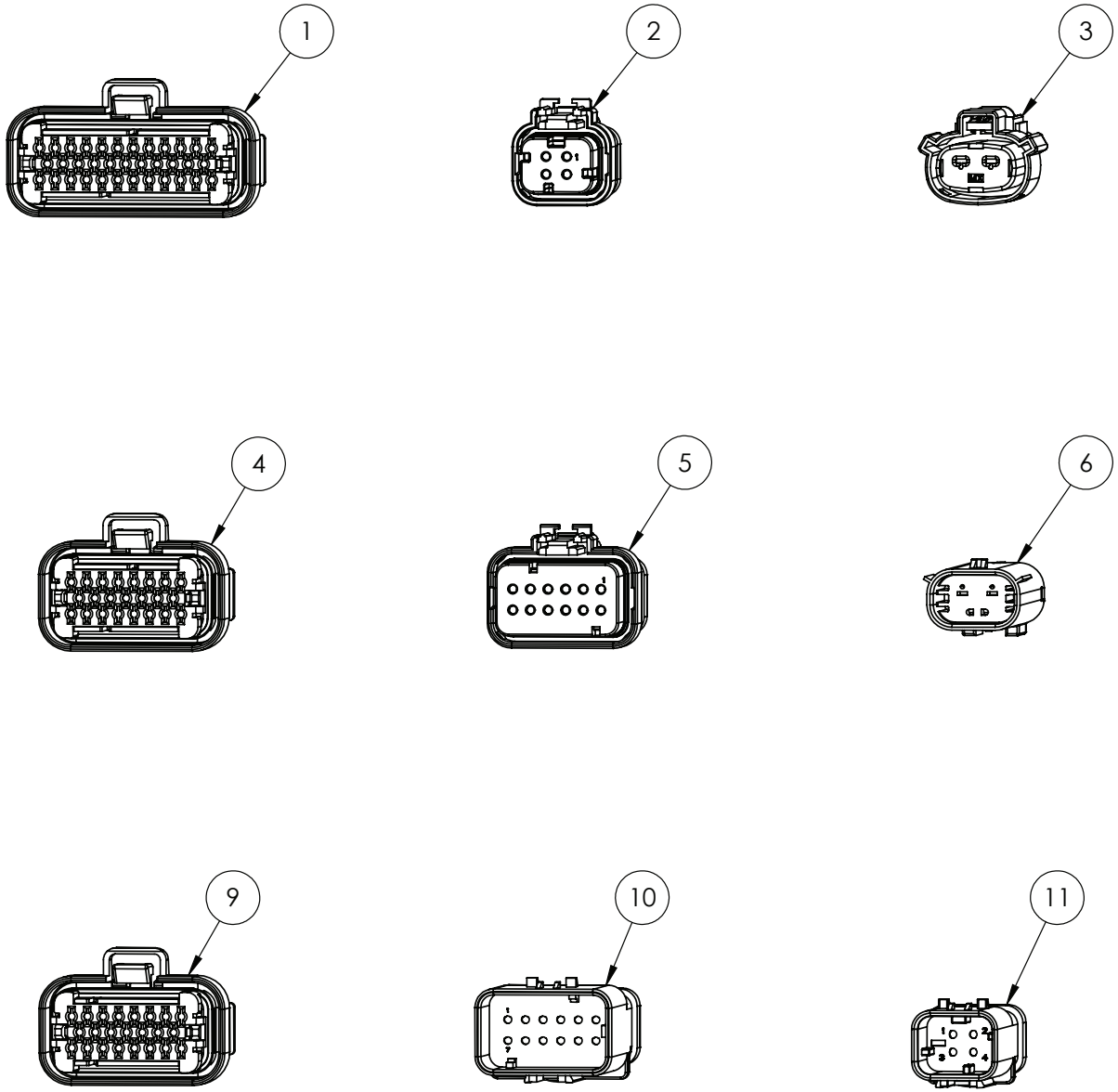

IF DESCRIPTION PREFIX IS ASSEMBLY DRAWING ONLY OR PRODUCTION DRAWING ONLY THE ITEM IS NOT FOR SALE			
ITEM	PART NUMBER	DESCRIPTION	QTY
1	GA3001135	ELECTRICAL CONNECTOR, 35 PIN PLUG, BLACK, AMPSEAL, 776164-1	1
2	GA3000839	ELECTRICAL CONNECTOR, 4 SOCKET, RED PLUG, 18-14 AWG, AMPSEAL 16, 776524-1	1
3	GA3001141	ELECTRICAL CONNECTOR, 2 PIN RECEPTACLE, MOLEX 19432-0013, SUIT 19434-0003 SOCKETS	1
4	GA3001136	ELECTRICAL CONNECTOR, 23 PIN PLUG, BLACK, AMPSEAL, 770680-1	1
5	GA3001140	ELECTRICAL CONNECTOR, 12 PIN PLUG, AMPSEAL 16, SUIT DEUTSCH 16 SOCKETS, 776437-1	1
6	GA3001142	ELECTRICAL CONNECTOR, 2 PIN PLUG, MOLEX 19433-0013, SUIT 19431-0001 PINS	1
7	GA3001143	ELECTRICAL TERMINAL CONNECTOR, FEMALE, MX150L, MOLEX, 19434-0003	1
8	GA3001138	ELECTRICAL CONTACT, AMPSEAL GOLD SOCKET, 16-20 AWG, LOOSE PIECE, 770854-3	1
9	GA3001137	ELECTRICAL CONNECTOR, 23 PIN PLUG, GREY, AMPSEAL, 770680-4	1
10	GA3001139	ELECTRICAL CONNECTOR, 12 PIN RECEPTACLE, AMPSEAL 16, SUIT DEUTSCH 16 PINS, 776438-1	1
11	GA3000840	ELECTRICAL CONNECTOR, 4 PIN, RED INTERNAL RECEPTACLE, 18-14 AWG, AMPSEAL 16, 776488-1	1
GA7800256 GOLDACRES	TITLE ELECTRICAL CONNECTORS, RAVEN HARNESS, AMPSEAL, MOLEX, PARTS DRAWING		REV 00.B

Raven, AMP Plugs

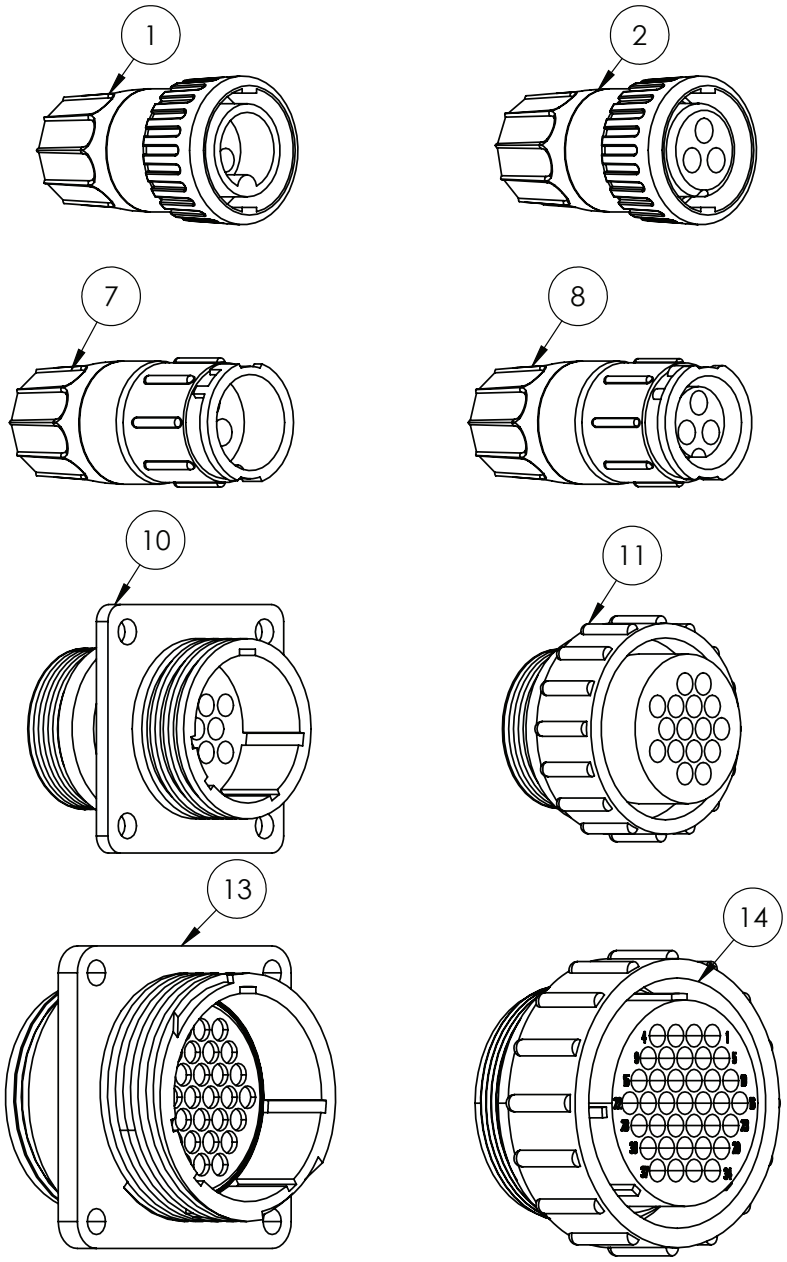

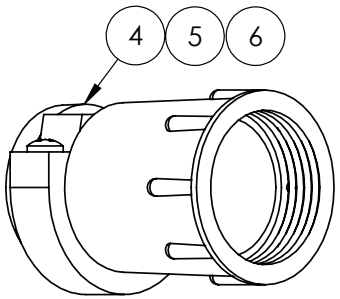

IF DESCRIPTION PREFIX IS ASSEMBLY DRAWING ONLY OR PRODUCTION DRAWING ONLY THE ITEM IS NOT FOR SALE			
ITEM	PART NUMBER	DESCRIPTION	QTY
1	GA5076920	CONNECTOR, 3 PIN KIT, SPEED SENSOR, INCLUDING MALE PINS, RAVEN, 4084001010	1
2	GA5076922	CONNECTOR, 3 PIN KIT, FLOW METER, INCLUDING FEMALE PINS, RAVEN	1
3	GA5076927	RAVEN MALE SPEED SENSOR/FLOW METER PIN	1
4	GA5049175	CONNECTOR, BACKING SHELL, SUIT 16 PIN AMP, RAVEN, 206322	1
5	GA5020560	CONNECTOR, BACKING SHELL 23, SUIT 37 PIN AMP, STANDARD SIZE	1
6	GA5020559	CONNECTOR, BACKING SHELL 23, SUIT 37 PIN AMP, LARGE SIZE	1
7	GA5076921	CONNECTOR, 3 PIN KIT, FLOW METER, INCLUDING MALE PINS, RAVEN	1
8	GA5076923	CONNECTOR, 3 PIN KIT, SPEED SENSOR, INCLUDING FEMALE PINS, RAVEN	1
9	GA5076928	RAVEN FEMALE PIN SPEED SENSOR/ FLOW METER	1
10	GA5076924	CONNECTOR, 16 PIN AMP, SQUARE FLANGE, SUIT MALE PINS, RAVEN, 4084001017, 206036-1	1
11	GA5076925	CONNECTOR, 16 PIN AMP, SUIT FEMALE PINS, RAVEN, 4084001018, 206037-1	1
12	GA5048905	PIN, 14-18 GAUGE GOLD, MALE, SUIT 16 PIN AMP, 4084001162	1
13	GA5020780	CONNECTOR, 37 PIN AMP, FEMALE	1
14	GA5020785	CONNECTOR, 37 PIN AMP, MALE, RAVEN	1
15	GA5048900	PIN, 14-18 GAUGE GOLD, FEMALE, SUIT 16 PIN AMP, 4084001163	1
-	GA5020561	CONNECTOR DUST CAP, 37 PIN AMP, MALE, RAVEN	-
-	GA5075848	DUST CAP, 16 PIN AMP CONNECTOR, FEMALE, 10630171042-E	-
-	GA5020575	DUST CAP, 16 PIN AMP CONNECTOR, MALE	-
-	GA5075927	DUST CAP 37 PIN SERIES 23 (4000 SERIES CONNECTOR DUST CAP, 37 PIN AMP, SERIES 23, RAVEN, 10630172526-B	-
GA7800040 GOLDACRES	RAVEN, AMP PLUGS		REV 00

Electrical Connectors, Weather Pack

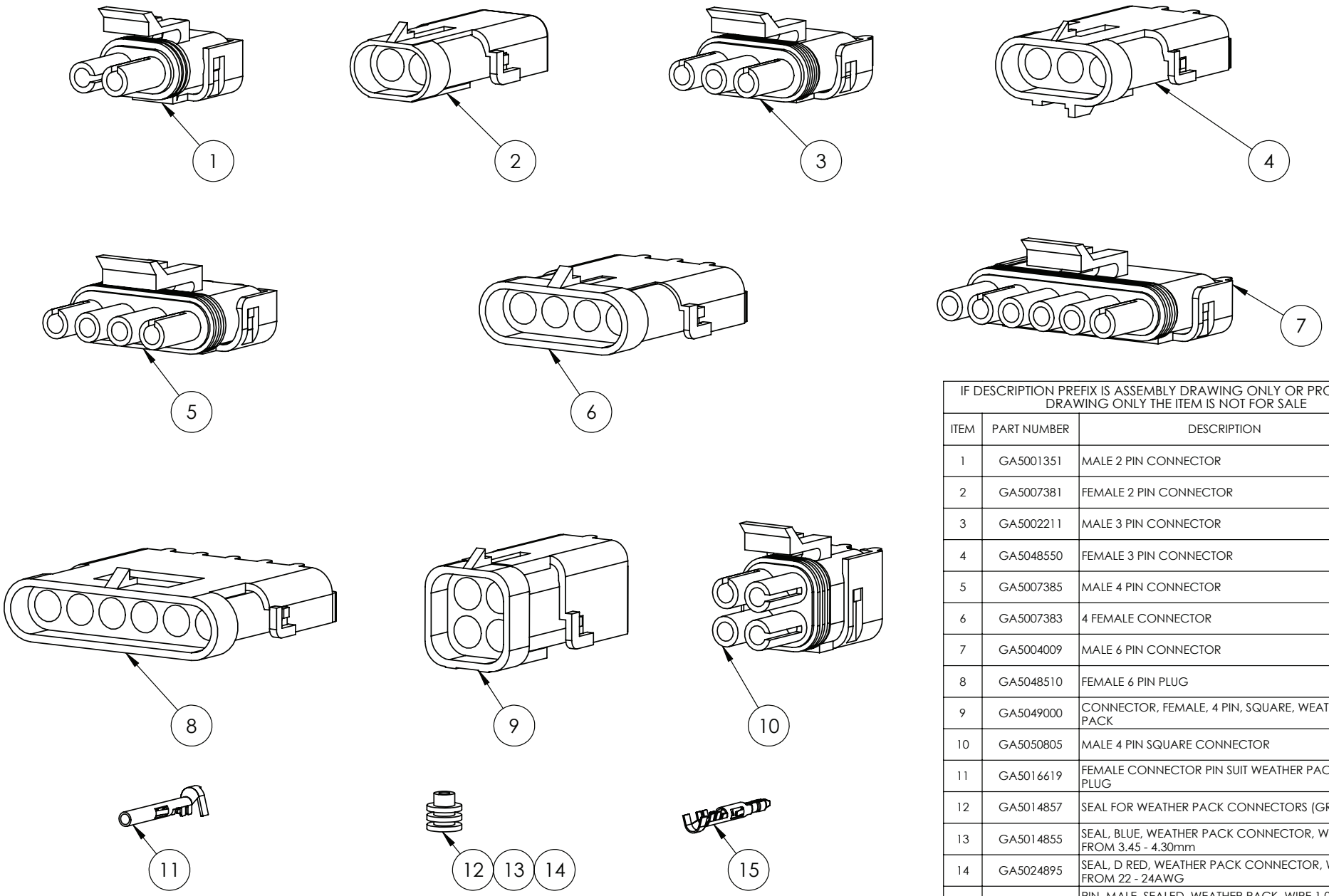

IF DESCRIPTION PREFIX IS ASSEMBLY DRAWING ONLY OR PRODUCTION DRAWING ONLY THE ITEM IS NOT FOR SALE			
ITEM	PART NUMBER	DESCRIPTION	QTY
1	GA5001351	MALE 2 PIN CONNECTOR	1
2	GA5007381	FEMALE 2 PIN CONNECTOR	1
3	GA5002211	MALE 3 PIN CONNECTOR	1
4	GA5048550	FEMALE 3 PIN CONNECTOR	1
5	GA5007385	MALE 4 PIN CONNECTOR	1
6	GA5007383	4 FEMALE CONNECTOR	1
7	GA5004009	MALE 6 PIN CONNECTOR	1
8	GA5048510	FEMALE 6 PIN PLUG	1
9	GA5049000	CONNECTOR, FEMALE, 4 PIN, SQUARE, WEATHER PACK	1
10	GA5050805	MALE 4 PIN SQUARE CONNECTOR	1
11	GA5016619	FEMALE CONNECTOR PIN SUIT WEATHER PACK PLUG	1
12	GA5014857	SEAL FOR WEATHER PACK CONNECTORS (GREEN)	1
13	GA5014855	SEAL, BLUE, WEATHER PACK CONNECTOR, WIRE FROM 3.45 - 4.30mm	1
14	GA5024895	SEAL, D RED, WEATHER PACK CONNECTOR, WIRE FROM 22 - 24AWG	1
15	GA5016617	PIN, MALE, SEALED, WEATHER PACK, WIRE 1.0 - 2.0mm	1
GA7800043 GOLDACRES		ELECTRICAL CONNECTORS, WEATHER PACK	REV 00

Electrical Connectors - Deutsch

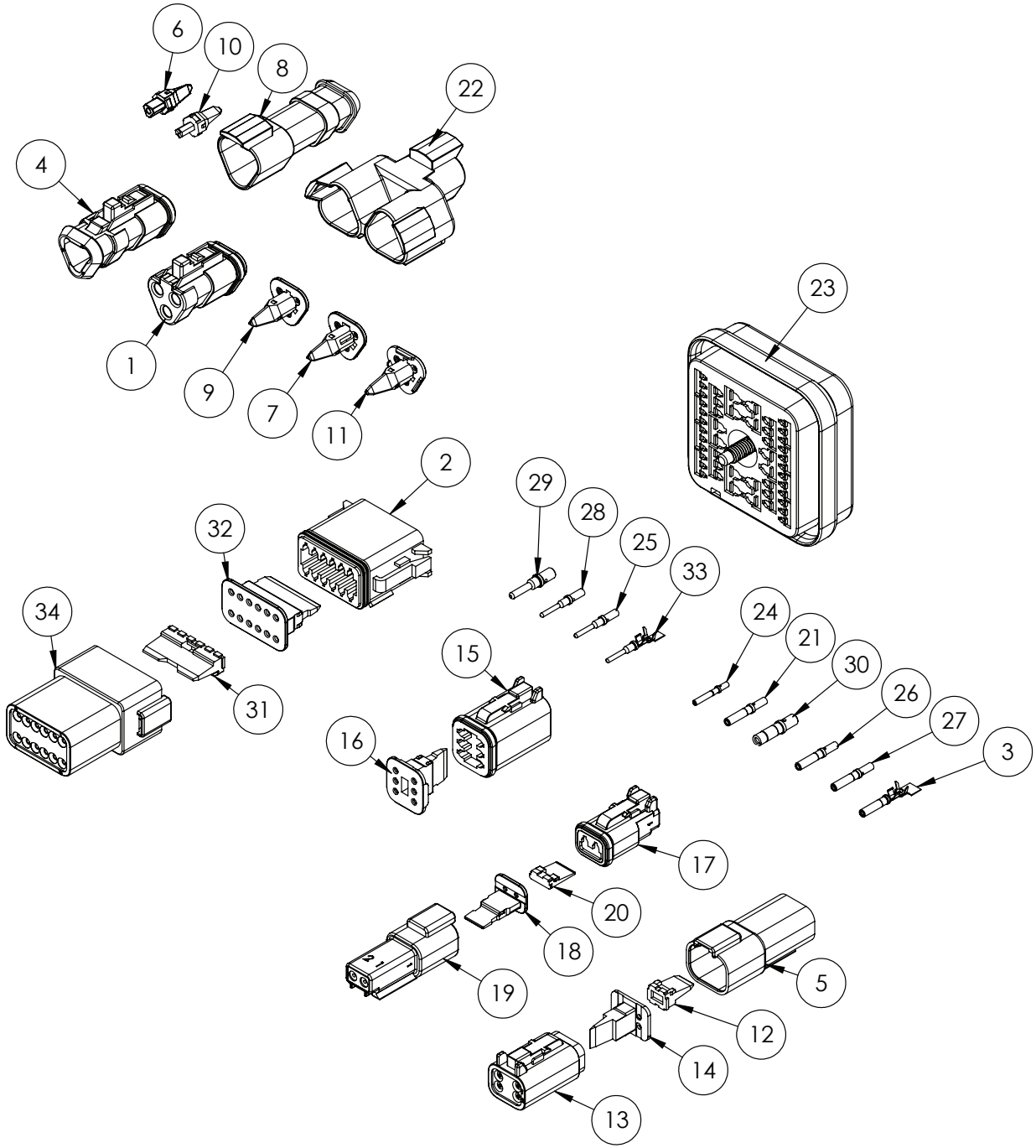

IF DESCRIPTION PREFIX IS ASSEMBLY DRAWING ONLY OR PRODUCTION DRAWING ONLY THE ITEM IS NOT FOR SALE			
ITEM	PART NUMBER	DESCRIPTION	QTY
1	GA5054350	PLUG, GREY, 120 OHM RESISTOR TERMINATOR, DEUTSCH	1
2	GA5061780	PLUG, 12 WAY SOCKETS, DT SERIES, DEUTSCH	1
3	GA3000022	SOCKET, FEMALE, NICKEL, CRIMP STYLE, NUMBER 16, DEUTSCH	1
4	GA5011831	PLUG, 3 WAY SOCKETS, SHRINK BOOT ADAPTER, DEUTSCH	1
5	GA5013783	RECEPTACLE, 4 WAY, PINS, DT SERIES DEUTSCH	1
6	GA5017719	WEDGE LOCK, BLUE, 3 PIN, SUIT TERMINATOR, DEUTSCH	1
7	GA5017721	WEDGE LOCK, BLUE, 3 SOCKET, DEUTSCH	1
8	GA5050740	RECEPTACLE, 3 PIN, SHRINK BOOT, DEUTSCH, DT04-3P-E008	1
9	GA5050750	WEDGE LOCK, ORANGE, 3 SOCKET, DEUTSCH	1
10	GA5050760	WEDGE LOCK, GREEN, 3 PIN, DEUTSCH, W3-P	1
11	GA5050761	WEDGE LOCK, GREEN, 3 SOCKET, DEUTSCH	1
12	GA5050765	WEDGE LOCK, GREEN, 4 WAY PINS, DEUTSCH	1
13	GA5050840	PLUG, 4 WAY SOCKET, DT SERIES, DEUTSCH	1
14	GA5050845	DEUTSCH 4PIN WEDGELOCK PLUG DT(W4S)	1
15	GA5050960	PLUG, 6 WAY SOCKET, DT SERIES, DEUTSCH	1
16	GA5050965	WEDGE LOCK, ORANGE, 6 WAY SOCKETS, DT SERIES, DEUTSCH	1
17	GA5052820	PLUG, 2 WAY, SOCKET, DT SERIES, DEUTSCH	1
18	GA5052825	WEDGE LOCK, 2 WAY, SOCKETS, DT SERIES, DEUTSCH	1
19	GA5052830	RECEPTACLE, 2 WAY, PINS, DT SERIES, DEUTSCH, DT04-2P	1
20	GA5052835	WEDGE LOCK, 2 WAY, DT SERIES, DEUTSCH	1
21	GA5053235	SOCKET, FEMALE, NICKEL, NUMBER 16, 14 AWG, GREEN BAND, DEUTSCH	1
22	GA5054365	RECEPTACLE, 3 WAY 3 PIN, Y SPLITTER, DEUTSCH	1
23	GA5060440	PLUG, 48 SUITS PINS, DRB SERIES, DEUTSCH	1
24	GA5061210	SOCKET, FEMALE, SOLID, NICKEL, NUMBER 20, DEUTSCH	1
25	GA5061270	SOCKET, FEMALE, SOLID, NICKEL, NUMBER 12, DEUTSCH	1
26	GA3000873	ELECTRICAL CONNECTOR, ISO BUS, 4P PLUG IBRC SUIT GA3000872, 14084002132	1
27	GA5061230	SOCKET, FEMALE, SOLID, NICKEL, NUMBER 16, DEUTSCH	1
28	GA5061240	PIN, MALE, SOLID, NICKEL, NUMBER 16, GREEN BAND, AWG 14, DEUTSCH, 0460-215-16141	1
29	GA3000876	PIN, MALE, SOLID, NICKEL, NUMBER 8, DEUTSCH, 0460-204-08141	1
30	GA3000877	SOCKET, FEMALE, SOLID, NICKEL, 8-10 AWG, DEUTSCH, 0462-203-08141	1
31	GA5070590	WEDGE LOCK, GREEN, 12 WAY SUIT PINS, DEUTSCH	1
32	GA5070595	WEDGE LOCK, GREEN, 12 WAY SOCKETS, DEUTSCH	1
33	GA5075255	PIN, MALE, NICKEL, CRIMP STYLE, NUMBER 16, DEUTSCH	1
34	GA5061785	RECEPTACLE, 12 WAY SUIT PINS, DT SERIES, DEUTSCH	1
GA7800045 GOLDACRES		ELECTRICAL CONNECTORS - DEUTSCH	REV 00

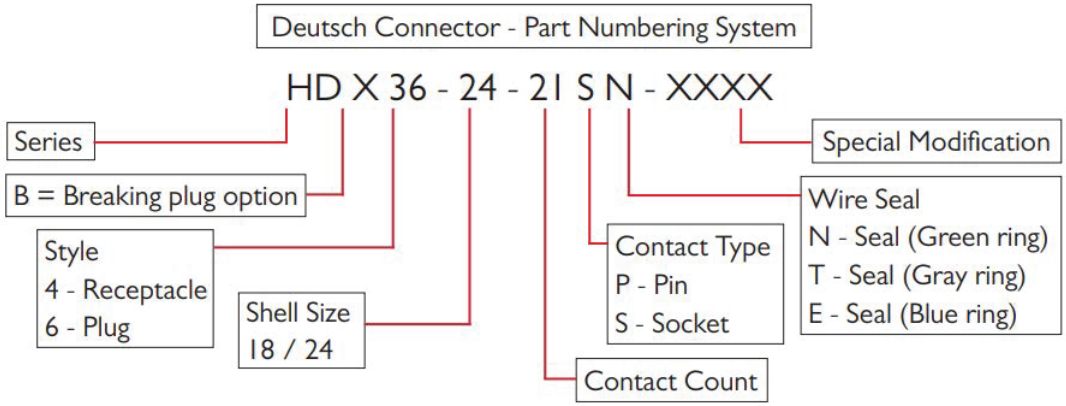

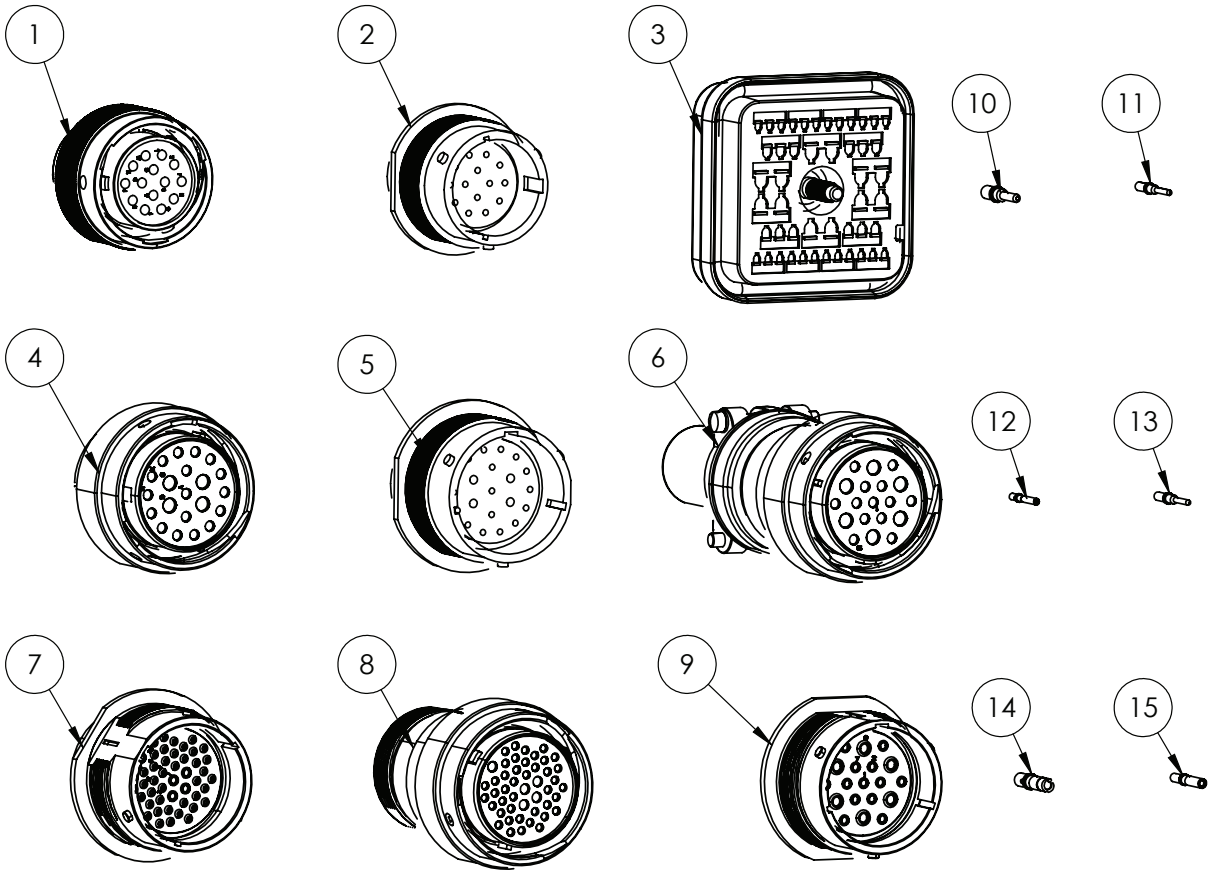

IF DESCRIPTION PREFIX IS ASSEMBLY DRAWING ONLY OR PRODUCTION DRAWING ONLY THE ITEM IS NOT FOR SALE			
ITEM	PART NUMBER	DESCRIPTION	QTY
1	GA5002663	CONNECTOR HD36-18-14SN	1
2	GA5002671	CONNECTOR HD34-18-14PN DEUTSCH	1
3	GA5060440	PLUG, 48 PIN SUITS PINS, DRB SERIES, DEUTSCH	1
4	GA5002655	CONNECTOR HD36-24-21SN-059 DEUTSCH	1
5	GA5002675	CONNECTOR HD34-24-21PN DEUTSCH	1
6	GA5021310	DEUTSCH CONNECTOR HD36-24-19SN-059 (STRAIN RELIEF)	1
7	GA5062635	DEUTSCH CONNECTOR HD34-24-47-PE	1
8	GA5062640	DEUTSCH CONNECTOR HD36-24-47-SE-059 (STRAIN RELIEF)	1
9	GA5021315	DEUTSCH CONNECTOR HD34-24-19PN	1
10	GA5061260	PIN, MALE, SOLID, NICKEL, NUMBER 12, DEUTSCH	1
11	GA5061200	PIN, MALE, SOLID, NICKEL, NUMBER 20, DEUTSCH	1
12	GA5061210	SOCKET, FEMALE, SOLID, NICKEL, NUMBER 20, DEUTSCH	1
13	GA5061240	PIN, MALE, SOLID, NICKEL, NUMBER 16, GREEN BAND, AWG 14, DEUTSCH	1
14	GA5061270	SOCKET, FEMALE, SOLID, NICKEL, NUMBER 12, DEUTSCH	1
15	GA5061230	SOCKET, FEMALE, SOLID, NICKEL, NUMBER 16, DEUTSCH	1
GA7800044 GOLDACRES		ELECTRICAL CONNECTORS - DEUTSCH	REV 00

Electrical Connectors - Deutsch

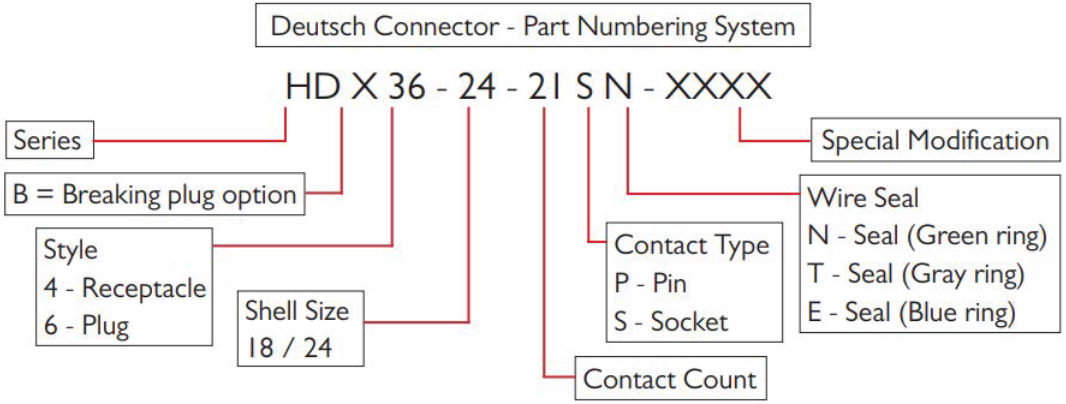

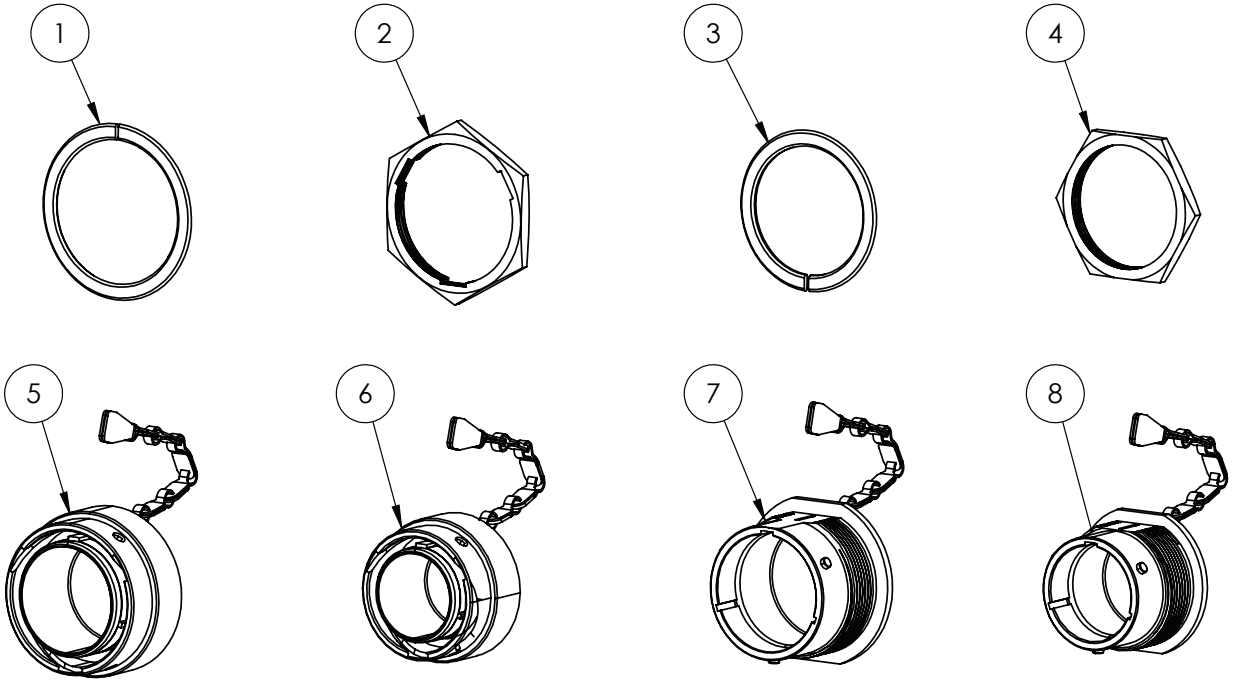

IF DESCRIPTION PREFIX IS ASSEMBLY DRAWING ONLY OR PRODUCTION DRAWING ONLY THE ITEM IS NOT FOR SALE			
ITEM	PART NUMBER	DESCRIPTION	QTY
1	GA5017621	WASHER DEUTSCH SHELL #24	1
2	GA5012399	NUT, FOR CONNECTOR, 24 SHELL, DEUTSCH	1
3	GA5009893	HD SERIES WASHER SIZE #18 SHELL	1
4	GA5009887	HD NUT SIZE #18 SHELL	1
5	GA5020925	DUST CAP, FEMALE, 24 SHELL, ALUMINIUM, DEUTSCH, HDC36-24	1
6	GA5020915	DUST CAP, SUIT HDC36-18 CONNECTOR, DEUTSCH	1
7	GA5020920	DUST CAP, MALE, 24 SHELL, ALUMINIUM, DEUTSCH, HDC34-24	1
8	GA5020910	DUST CAP, SUIT HDC34-18 CONNECTOR, DEUTSCH	1
GA7800047 GOLDACRES		ELECTRICAL CONNECTORS - DEUTSCH	REV 00

10 - Hydraulic & Pneumatics

Hydraulic Manifold Assy, Chassis Control

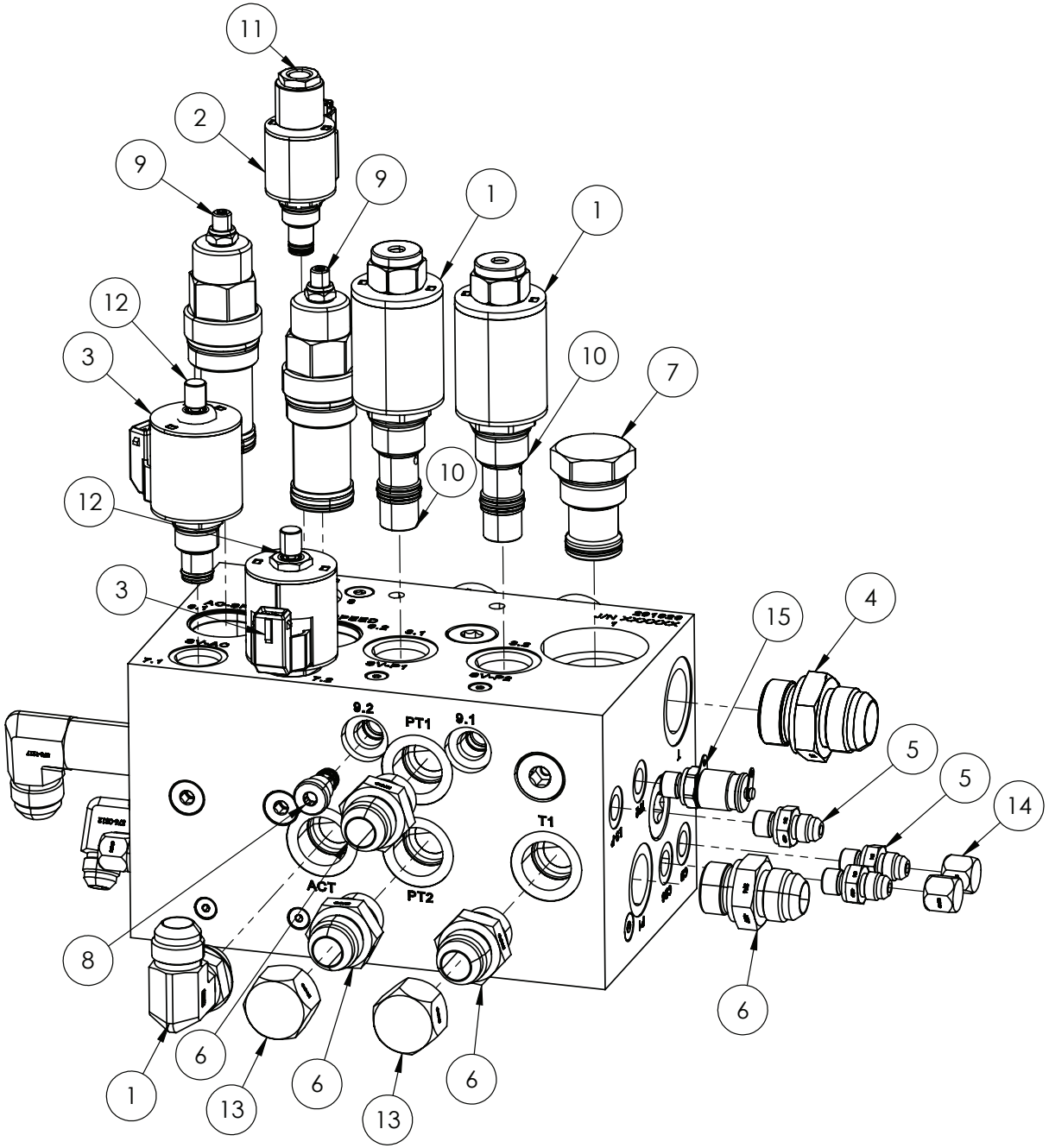

IF DESCRIPTION PREFIX IS ASSEMBLY DRAWING ONLY OR PRODUCTION DRAWING ONLY THE ITEM IS NOT FOR SALE			
ITEM	PART NUMBER	DESCRIPTION	QTY
1	GA3000578	COIL, 12V DC, OILPATH, 4303212	2
2	GA3000579	COIL, 12V DC, OILPATH, 4303612	1
3	GA3000577	COIL, 12V DC, OILPATH, 4303712	2
4	GA3500590	HYDRAULIC ADAPTOR NIPPLE, 1" BSPP X 1 5/16" JIC, S74-1621	1
5	GA3500544	HYDRAULIC ADAPTOR NIPPLE, 1/4" BSP O-RING X 9/16" JIC, S74-0409	3
6	GA3500711	HYDRAULIC ADAPTOR NIPPLE, 3/4" BSP O-RING X 1 1/16" JIC, S74-1217	5
7	GA3501192	HYDRAULIC CARTRIDGE, CHECK VALVE, OILPATH, CV16-20-0-N-5	1
	GA3500900	SEAL KIT, OILPATH, SK16-2N-T	-
8	GA3500914	HYDRAULIC CARTRIDGE, CHECK VALVE, OILPATH, HVC06-20-0-U-05	6
	GA3500915	SEAL KIT, OILPATH, SK06-2U-O	-
9	GA3501195	HYDRAULIC CARTRIDGE, FLOW CONTROL, OILPATH, VCF-06-A	2
10	GA3501193	HYDRAULIC CARTRIDGE, PROPORTIONAL VALVE, OILPATH, PV72-20AG-0-N-12ER	2
	GA3501194	SEAL KIT, OILPATH, SK-12-2N-M	-
11	GA3501197	HYDRAULIC CARTRIDGE, SOLENOID VALVE, DCV, OILPATH, SV08-28-0-N-12ER	1
	GA3500883	SEAL KIT, OILPATH, SK08-2N-M	-
12	GA3501196	HYDRAULIC CARTRIDGE, SOLENOID VALVE, DCV, OILPATH, SV10-20M-0-N-12ER	2
	GA3500910	SEAL KIT, OILPATH, SK10-2N-T	-
13	GA3500795	HYDRAULIC ADAPTOR, CAP, 1 1/16" JIC FEMALE, S65-17	2
14	GA3500793	HYDRAULIC ADAPTOR, CAP, 9/16" JIC FEMALE, S65-09	2
15	GA3500133	HYDRAULIC COUPLING, EASY TEST POINT, 1/4" BSPP	1
22	GA5026195	VALVE, NEEDLE, VTV-14M, OILPATH	1
GA3500938 GOLDACRES		HYDRAULIC MANIFOLD BLOCK, BOLT ON, OILPATH, 691926	REV 01.C

Hydraulic Manifold Assy, Chassis Control

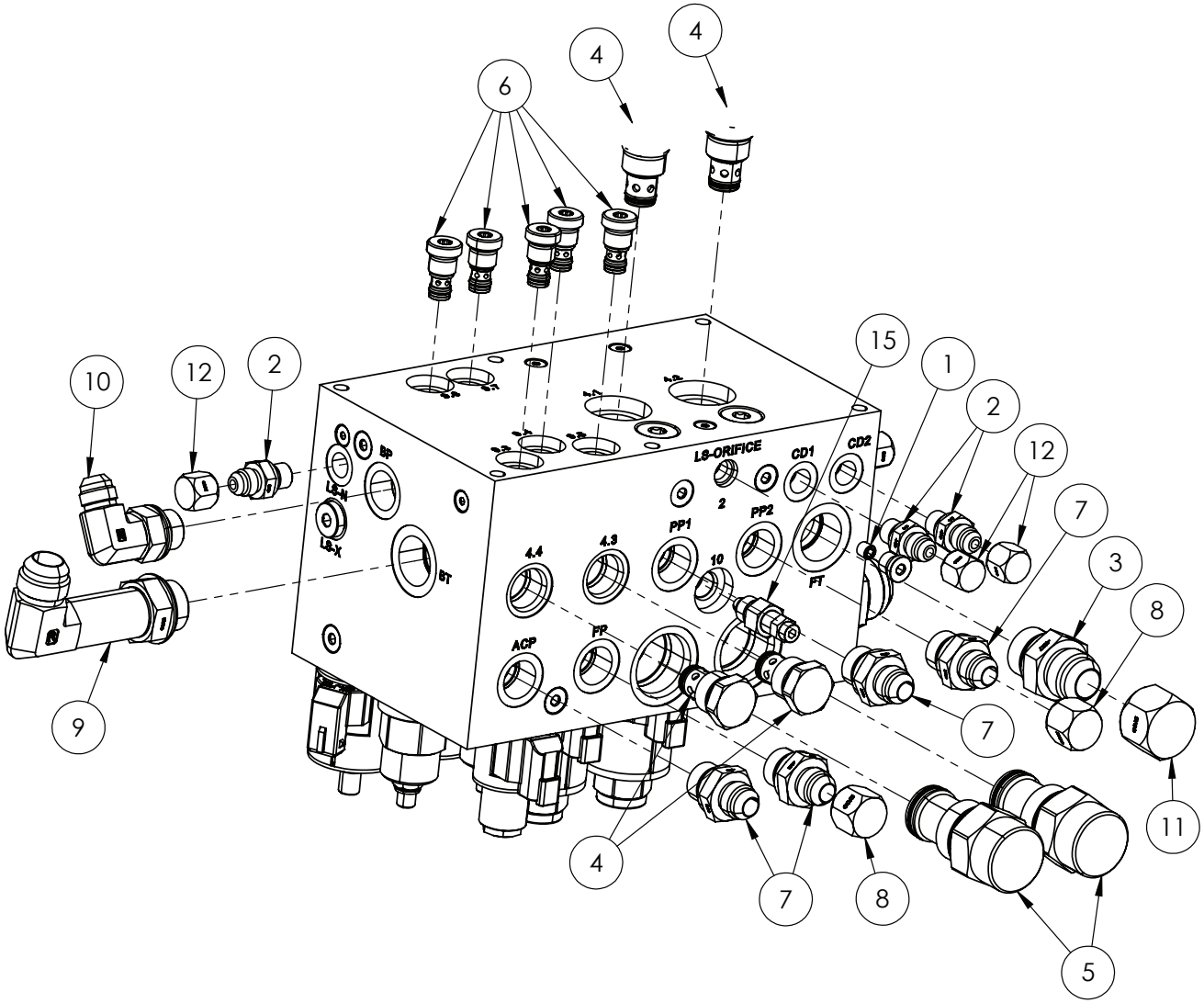

IF DESCRIPTION PREFIX IS ASSEMBLY DRAWING ONLY OR PRODUCTION DRAWING ONLY THE ITEM IS NOT FOR SALE			
ITEM	PART NUMBER	DESCRIPTION	QTY
1	GA5047691	GRUB SCREW, PLUG, 1/16 NPT	1
2	GA3500544	HYDRAULIC ADAPTOR NIPPLE, 1/4" BSP O-RING X 9/16" JIC, S74-0409	3
3	GA3500711	HYDRAULIC ADAPTOR NIPPLE, 3/4" BSP O-RING X 1 1/16" JIC, S74-1217	4
4	GA3500884	HYDRAULIC CARTRIDGE, CHECK VALVE, OILPATH, CV10-20-0-N-05	4
5	GA3500899	HYDRAULIC CARTRIDGE, CHECK VALVE, OILPATH, CV16-20T-0-N-150	2
6	GA3500914	HYDRAULIC CARTRIDGE, CHECK VALVE, OILPATH, HVC06-20-0-U-05	6
7	GA3500303	HYDRAULIC ADAPTER, NIPPLE, 1/2" BSPP O-RING MALE X 3/4" JIC MALE, S74-0812	4
8	GA3500794	HYDRAULIC ADAPTOR, CAP, 3/4" JIC FEMALE, S65-12	2
9	GA5047691	HYDRAULIC ADAPTOR, ELBOW, 90 DEGREE, EXTENSION, 1 1/16" JIC MALE X 3/4" BSPP MALE O-RING, S70-1217	1
10	GA3500722	HYDRAULIC ADAPTOR, ELBOW, 90 DEGREE, 3/4" JIC MALE X 1/2" BSPP MALE O-RING, S76-0812	1
11	GA3500795	HYDRAULIC ADAPTOR, CAP, 1 1/16" JIC FEMALE, S65-17	3
12	GA3500793	HYDRAULIC ADAPTOR, CAP, 9/16" JIC FEMALE, S65-09	3
14	GA3500133	HYDRAULIC COUPLING, EASY TEST POINT, 1/4" BSPP	1
15	GA5026195	VALVE, NEEDLE, VTV-14M, OILPATH	1
GA3500938 GOLDACRES		HYDRAULIC MANIFOLD BLOCK, BOLT ON, OILPATH, 691926	REV 01.C

Hydraulic Manifold, Chassis Control, Function Table

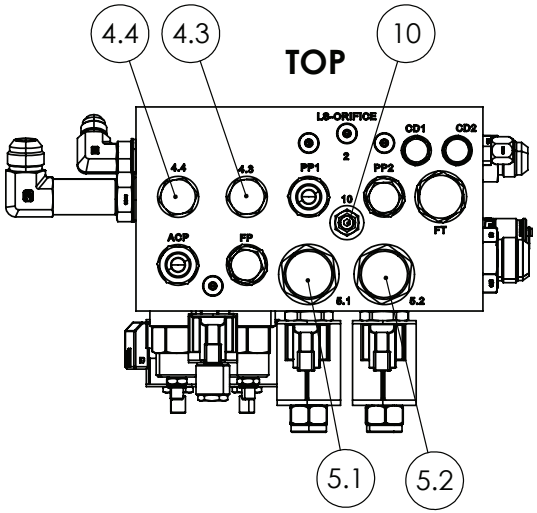

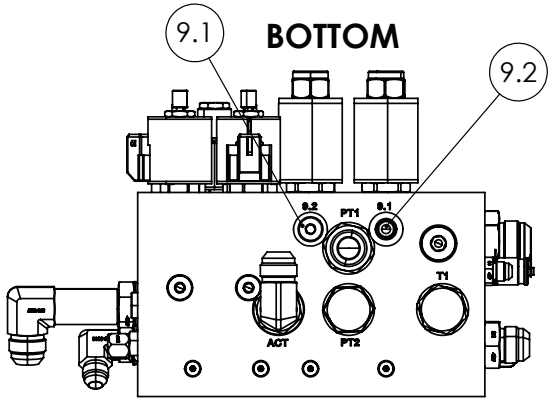

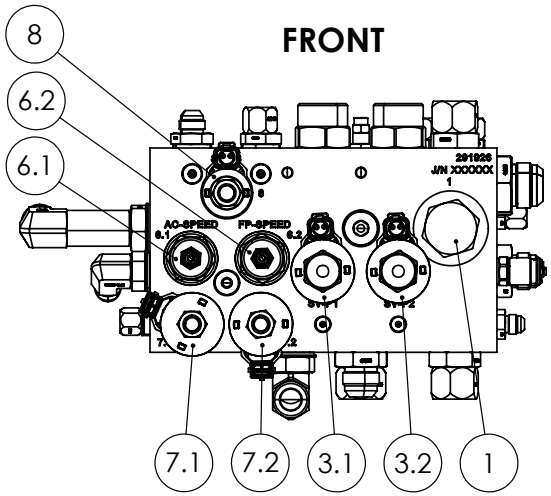

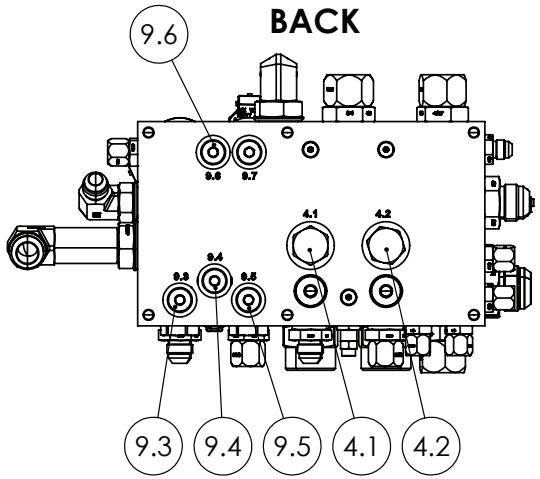

FUNCTION TABLE	
1	1 - TANK RETURN CHECK VALVE
3.1	SV P1 - SPRAY PUMP PROPORTIONAL SOLENOID VALVE
3.2	SV P2 - AGITATOR PUMP PROPORTIONAL SOLENOID VALVE
4.1	4.1 - SPRAY PUMP OVER-RUN CHECK VALVE
4.2	4.2 - AGITATOR PUMP OVER-RUN CHECK VALVE
4.3	4.3 - COMPRESSOR OVER-RUN CHECK VALVE
4.4	4.4 - FILL PUMP OVER-RUN CHECK VALKVE
5.1	5.1 - SPRAY PUMP PRESSURE LINE CHECK VALVE
5.2	5.2 - AGITATOR PUMP PRESSURE LINE CHECK VALVE
6.1	6.1 - AIR COMPRESSOR SPEED CONRTOL
6.2	6.2 - FILL PUMP SPEED CONTROL
7.1	SV AC - COMPRESSOR SOLENOID VALVE
7.2	SV FP - FILL PUMP SOLENOID VALVE
8	SV LS - LOAD SENSE SOLENOID VALVE
9.1	9.1 - SPRAY PUMP LOAD SENSE CHECK VALVE
9.2	9.2 - AGITATIR PUMP LOAD SENSE CHECK VALVE
9.3	9.3 - COMPRESSOR LOAD SENSE CHECK VALVE
9.4	9.4 - LOAD SENSE SOLENSOID CHECK VALVE
9.5	9.5 - FILL PUMP LOAD SENSE CHECK VALVE
9.6	9.6 - XRT LOAD SENSE CHECK VALVE
10	10 - NEEDLE VALVE
GA3500938 GOLDACRES	HYDRAULIC MANIFOLD BLOCK, BOLT ON, OILPATH, 691926	REV 01.C

Hydraulic Manifold Assembly, Boom Control

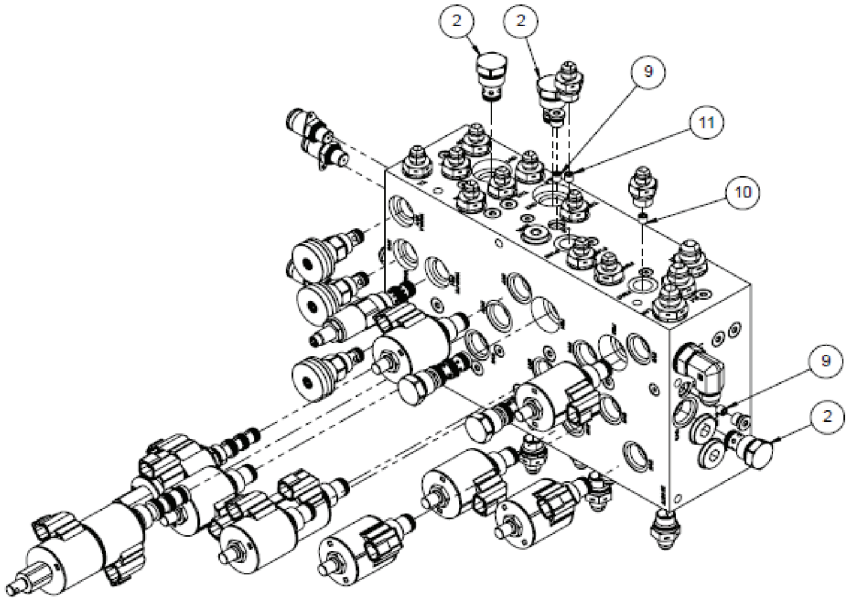

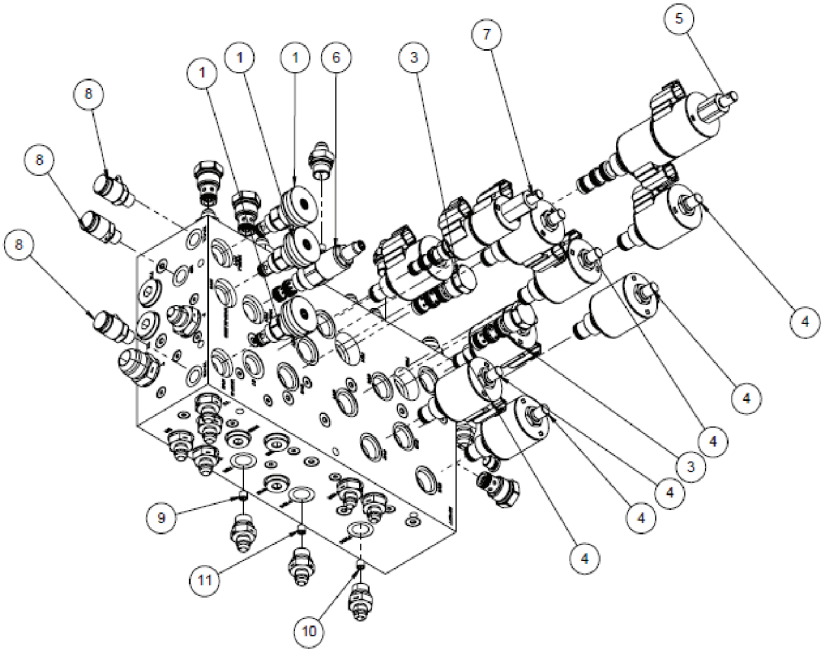

IF DESCRIPTION PREFIX IS ASSEMBLY DRAWING ONLY OR PRODUCTION DRAWING ONLY THE ITEM IS NOT FOR SALE			
ITEM	PART NUMBER	DESCRIPTION	QTY
1	GA3500882	HYDRAULIC CARTRIDGE, NEEDLE VALVE, OILPATH, NV08-23B-0-N	3
1.1	GA3500883	SEAL KIT, OILPATH, SK08-2N-M	2
2	GA3500884	HYDRAULIC CARTRIDGE, CHECK VALVE, OILPATH, CV10-20-0-N-05	3
2.1	GA3500885	SEAL KIT, OILPATH, SK-2N-T	2
3	GA3500886	HYDRAULIC CARTRIDGE, FLOW DIVIDER, OILPATH, FD50-45-0-N-22	2
3.1	GA3500887	SEAL KIT, OILPATH, SK10-4N-MMM	1
4	GA3500888	HYDRAULIC CARTRIDGE, SOLENOID VALVE, OILPATH, SV10-28M-0-N-00	8
4.1	GA3500889	SEAL KIT, OILPATH, SK10-2N-M	-
4.2	GA3000577	COIL, 12V DC, OILPATH, 4303712	-
5	GA3500890	HYDRAULIC CARTRIDGE, SOLENOID VALVE, DCV, OILPATH, HSV10-47DM-0-U-00	1
5.1	GA3500887	SEAL KIT, OILPATH, SK10-4N-MMM	-
5.2	GA3000577	COIL, 12V DC, OILPATH, 4303712	-
6	GA3500891	HYDRAULIC CARTRIDGE, PRESSURE REDUCING VALVE, OILPATH, PR08-32A-0-N-22	1
6.1	GA3500892	SEAL KIT, OILPATH, SK08-3N-BM	-
7	GA3500893	HYDRAULIC CARTRIDGE, SOLENOID VALVE, DCV, OILPATH, SV08-47DM-0-N-00	1
7.1	GA3500894	SEAL KIT, OILPATH, SK08-4N-MMM	-
7.2	GA3000579	COIL, 12V DC, OILPATH, 4303612	-
8	GA3500133	HYDRAULIC COUPLING, EASY TEST POINT, 1/4" BSPP	3
9	GA3500853	ORIFICE PLUG, 1/16", 1.5mm	3
10	GA3500896	ORIFICE PLUG, 1/16", 0.6mm	2
11	GA3500849	ORIFICE PLUG, 1/16", 0.8mm	2
GA3500677 GOLDACRES		HYDRAULIC MANIFOLD ASSEMBLY, BOOM CONTROL, G6 MY20	REV 00

Hydraulic Manifold, Boom Control, Function Table

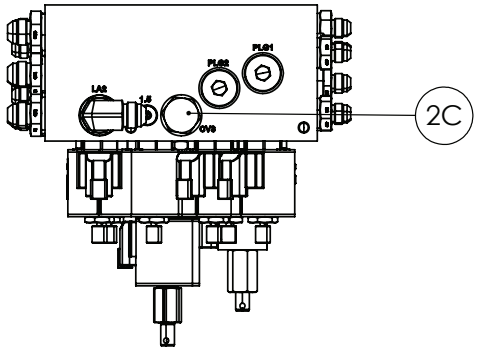

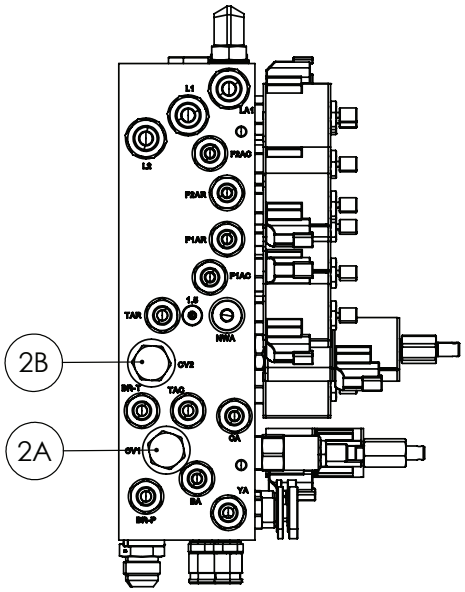

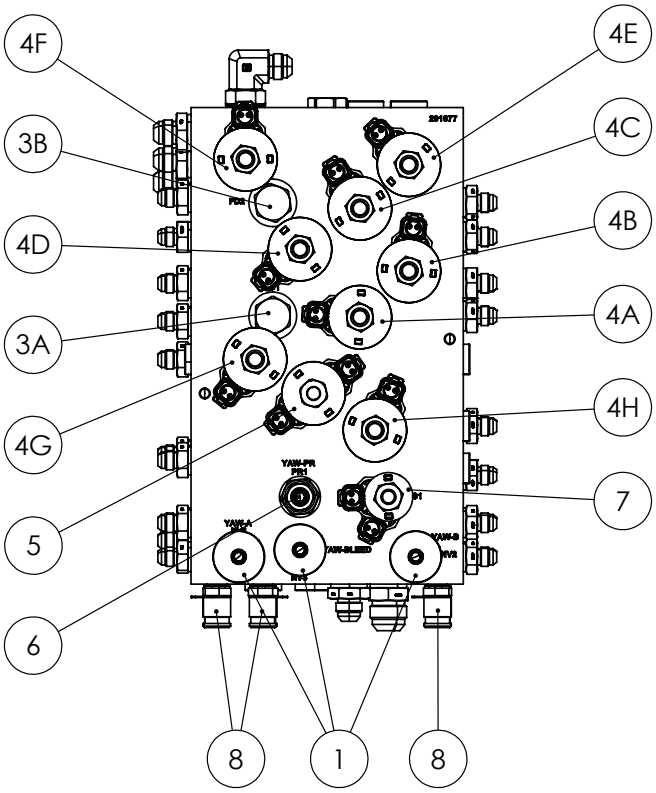

FUNCTION TABLE	
1	HYDRAULIC YAW VALVES
2A	CV1 - HYDRAULIC YAW CHECK VALVE
2B	CV2 - PRESSURE SUPPLY CHECK VALVE
2C	CV3 - BOOM LOWER CHECK VALVE
3A	FD1 - STAGE 1 FOLD FLOW DIVIDER
3B	FD2 - STAGE 2 BI FOLD FLOW DIVDER
4A	SV1 - STAGE 1 FOLD IN SOLENOID VALVE
4B	SV2 - STAGE 1 FOLD OUT SOLENOID VALVE
4C	SV3 - STAGE 2 BI FOLD IN SOLENOID VALVE
4D	SV4 - STAGE 2 BI FOLD OUT SOLENOID VALVE
4E	SV5 - LIFT / LOWER SOLENOID VALVE
4F	SV6 - LIFT ACCUMULATOR LOCKOUT SOLENOID VALVE
4G	SV7 - RIGHT TILT LIFT
4H	SV8 - LEFT TILT LIFT
5	DCV - DIRECTIONAL CONTROL VALVE, BOOM FUNCTIONS
6	PR1 - HYDRAULIC YAW PRESSURE REDUCING VALVE
7	S1 - CENTRE LEVEL SOLENOID VALVE
8	TP - GAUGE TEST POINTS
GA3500677 GOLDACRES	HYDRAULIC MANIFOLD ASSEMBLY, BOOM CONTROL, G6 MY20 — REV 00

Hydraulic Manifold, Boom Control, Factory Set Positions

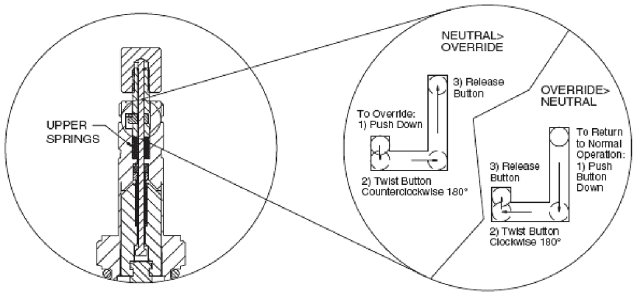

Exaggerated illustration of operation of Manual Override "M" option

FACTORY SET POSITIONS OF MANUAL OVERRIDES

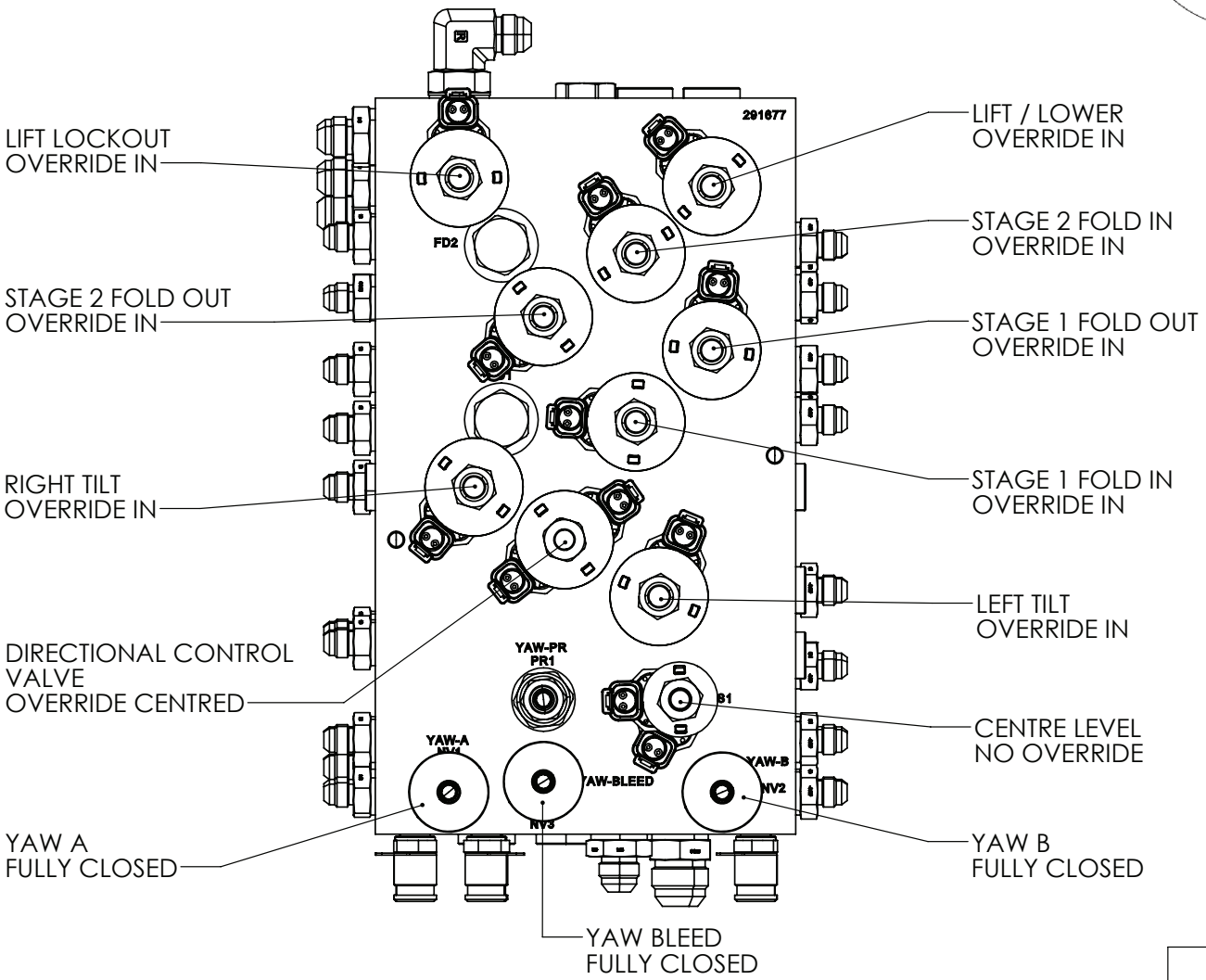

GA3500677 GOLDACRES	HYDRAULIC MANIFOLD ASSEMBLY, BOOM CONTROL, G6 MY20	REV 00

Hydraulic Manifold, Raven XRT

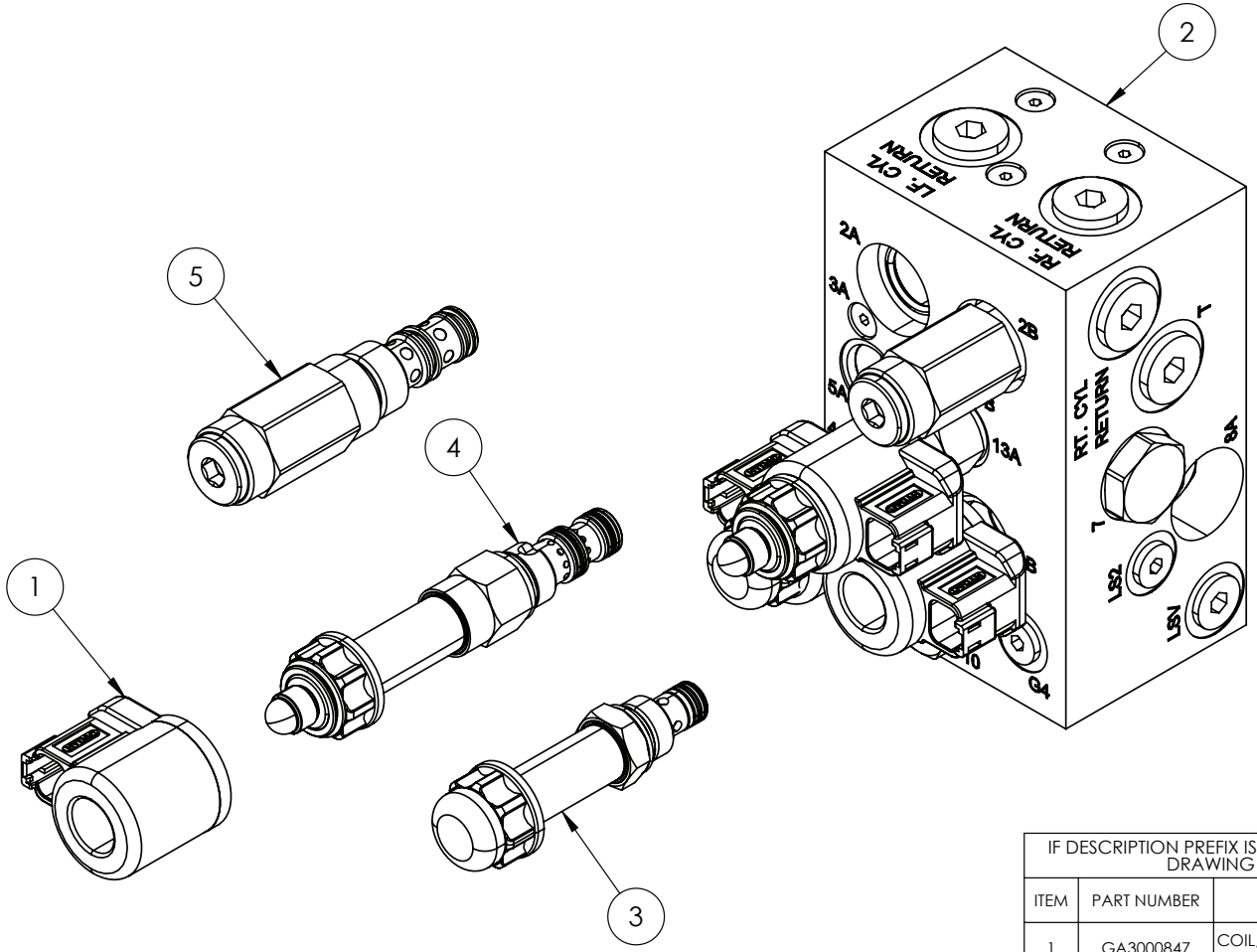

IF DESCRIPTION PREFIX IS ASSEMBLY DRAWING ONLY OR PRODUCTION DRAWING ONLY THE ITEM IS NOT FOR SALE			
ITEM	PART NUMBER	DESCRIPTION	QTY
1	GA3000847	COIL, 12V DC, DEUSTCH, CONNECTOR, XRT, 13340002118	4
2	GA3000385	VALVE, HYDRAULIC, RAVEN XRT ULTRAGLIDE, LOAD SENSE, 334-0235-002	1
3	GA5076857	VALVE, CARTRIDGE HYDRAULIC BLOCKER DBL 08, RAVEN, 3340002107	2
4	GA5076856	VALVE, CARTRIDGE HYDRAULIC PROPORTIONAL RDC/RLVG 08, RAVEN ULTRAGLIDE, 13340002106	2
5	GA5076858	VALVE, CARTRIDGE HYDRAULIC SEQUENCE 10, RAVEN, 3340002108	2
GA3000385 GOLDACRES		VALVE, HYDRAULIC, RAVEN XRT ULTRAGLIDE, LOAD SENSE, 334-0235-002	REV 00.C

Hydraulic Manifold, Boom Control, 48mt

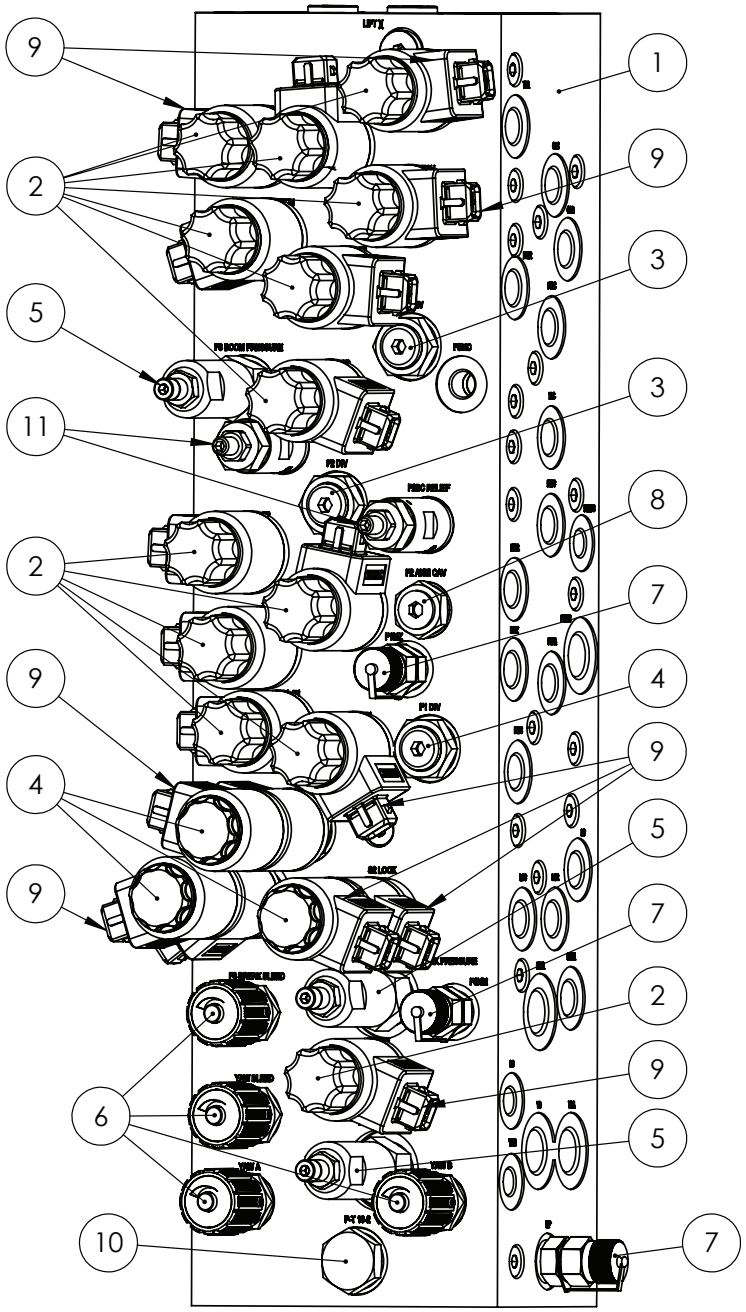

IF DESCRIPTION PREFIX IS ASSEMBLY DRAWING ONLY OR PRODUCTION DRAWING ONLY THE ITEM IS NOT FOR SALE			
ITEM	PART NUMBER	DESCRIPTION	QTY
1	GA3500603	HYDRAULIC CONTROL MANIFOLD, 48m BOOM	1
2	GA3500935	HYDRAULIC CARTRIDGE, POPPET VALVE, HYDAC, WSM06020W-01-C-N-0	13
3	GA3500934	HYDRAULIC CARTRIDGE, FLOW DIVIDER, HYDAC, ST10-01-C-N-11, 562884	3
4	GA3501808	HYDRAULIC FLOW DIVIDER/COMBINER, HYDAC, ST10-01-C-N-22, 562885	1
5	GA3501669	PRESSURE REDUCING VALVE, HYDAC, SCREW-IN CARTRIDGE, 3120534	3
6	GA3501671	HYDRAULIC NEEDLE VALVE, HYDAC, DV5E-01-X, 710300	4
7	GA3501672	TEST PORT, HYDRAULIC, HYDAC, ISO-228-G 1/4", 680107	3
8	GA3501673	HYDRAULIC CARTRIDGE, DIRECT ACTING, POPPET, HYDAC, RV08A-01-C-N-05, 560084	5
9	GA5056515	COIL, 12V DC, HYDAC, 12DN-40-1836, 3012600	19
10	GA3501674	HYDRAULIC CAVITY PLUG, HYDAC, FP102-0-N, 3014157	1
11	GA3501675	RELIEF VALVE POPPET, DIRECT ACTING, DB4E-01X-250V, 716143	2
GA3500603 GOLDACRES		HYDRAULIC CONTROL MANIFOLD, 48m BOOM	REV 00

Hydraulic Manifold, 48mt, Funcation Table

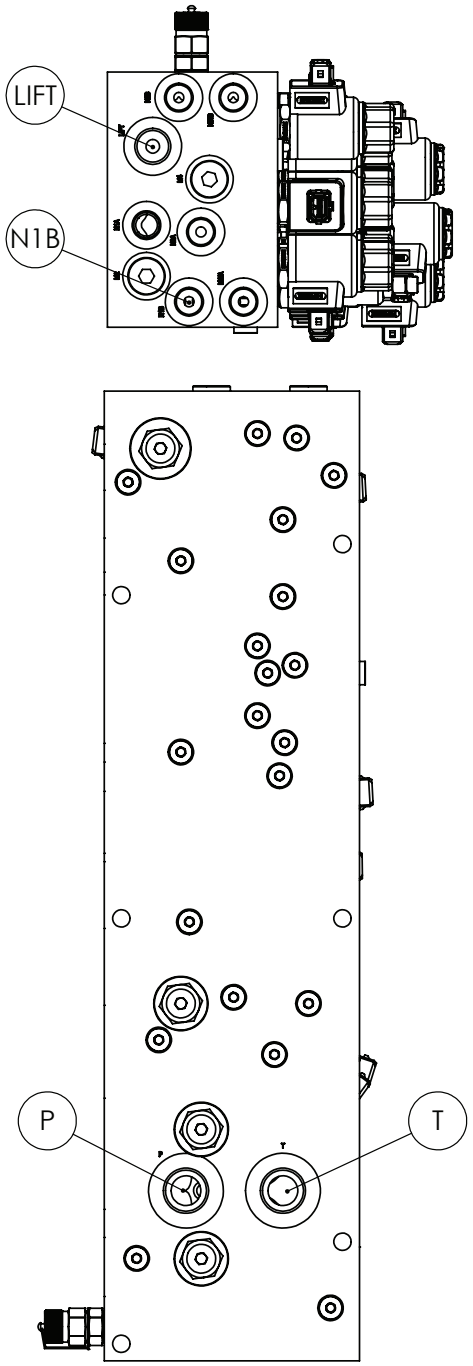

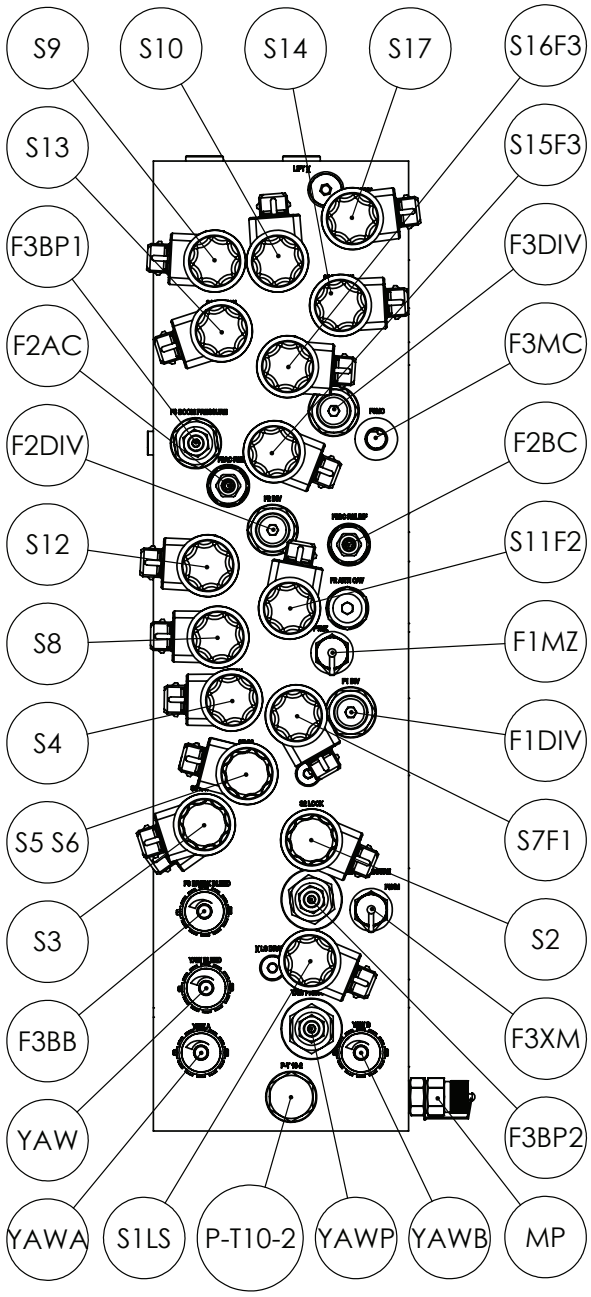

FUNCTION TABLE	
S1LS	HYDRAULIC YAW
S2	CENTRE LOCK
S3	BOOM LATCH
S4	FIRST STAGE FOLD - RETURN
S5 S6	BOOM OPERATIONS (MASTER)
S7F1	FIRST STAGE FOLD - RIGHT HAND SIDE
S8	FIRST STAGE FOLD - LEFT HAND SIDE
S9	BOOM TILT - RIGHT HAND SIDE
S10	BOOM TILT - LEFT HAND SIDE
S11F2	SECOND STAGE FOLD - RIGHT HAND SIDE
S12	SECOND STAGE FOLD - LEFT HAND SIDE
S13	BOOM CATCH - RIGHT HAND SIDE
S14	BOOM CATCH - LEFT HAND SIDE
S15F3	THIRD STAGE FOLD - RIGHT HAND SIDE
S16F3	THIRD STAGE FOLD - LEFT HAND SIDE
S17	BOOM LIFT
F1DIV	FIRST STAGE FOLD FLOW DIVIDER
F1MZ	FIRST STAGE FOLD TEST PORT
F2AC	SECOND STAGE FOLD - RIGHT HAND SIDE PRESSURE REFLIEF
F2BC	SECOND STAGE FOLD - LEFT HAND SIDE PRESSURE REFLIEF
F2DIV	SECOND STAGE FOLD FLOW DIVIDER
F3BB	THIRD STAGE FOLD BREAK BLEED
F3BP1	THIRD STAGE FOLD BOOM PRESSURE
F3BP2	THIRD STAGE BREAK PRESSURE
F3DIV	THIRD STAGE FOLD FLOW DIVIDER
F3MC	THIRD STAGE FOLD ACCUMULATOR
F3XM	THIRD STAGE FOLD TEST PORT
LIFT	LIFT CYLINDERS
N1B	RAVEN ULTRAGLIDE XRT
MP	TEST PORT
P-T10-2	RAVEN ULTRAGLIDE XRT
YAW	YAW BLEED
YAW A	YAW CONTROL - RIGHT HAND SIDE
YAW B	YAW CONTROL - LEFT HAND SIDE
YAW P	YAW PRESSURE
P	RAVEN ULTRAGLIDE XRT - LEFT HAND SIDE
T	RAVEN ULTRAGLIDE XRT - RIGHT HAND SIDE
GA7800158 GOLDACRES	HYDRAULIC CONTROL MANIFOLD, 48m BOOM	REV 00

Cylinder, Hydraulic, Boom Lift, 5000L & 6500L

REPLACEMENT PARTS			
ITEM	PART NUMBER	DESCRIPTION	QTY
A	GA3501576	SEAL KIT, HYDRAULIC CYLINDER, SUIT, GA3500682 & GA3500593, "BICELLI GECO" BRAND ONLY	-
	GA3501632	SEAL KIT, SUIT, HYDRAULIC CYLINDER, GA3500682, "MOTUS" BRAND ONLY, SK300250	-

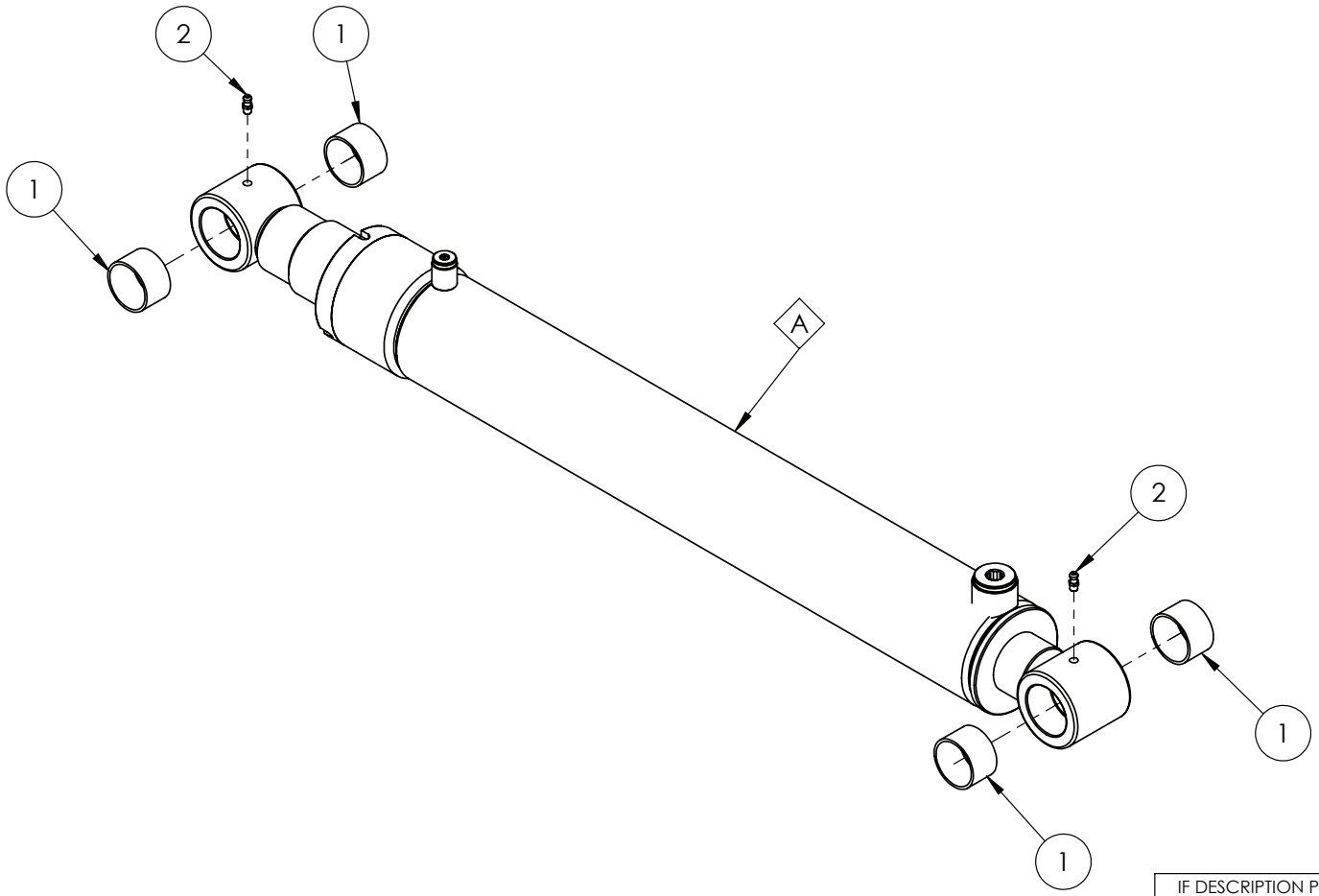

IF DESCRIPTION PREFIX IS ASSEMBLY DRAWING ONLY OR PRODUCTION DRAWING ONLY THE ITEM IS NOT FOR SALE			
ITEM	PART NUMBER	DESCRIPTION	QTY
1	GA1700027	BEARING, GLACIER BUSH, 1 1/2" ID X 1" LONG	4
2	GA5050450	GREASE NIPPLE, 6mm	2
GA3500682 GOLDACRES		HYDRAULIC CYLINDER, DISPLACEMENT, 3" BORE, 2.5" ROD 21" STROKE, 1 1/2" PIN EYES	REV 01.B

BICELLI GECO BRAND SHOWN

Cylinder, Hydraulic, Boom Lift, 8500L & 10,000L

REPLACEMENT PARTS			
ITEM	PART NUMBER	DESCRIPTION	QTY
A	GA3501576	SEAL KIT, HYDRAULIC CYLINDER, SUITS GA3500593, "BICELLI GECO" BRAND ONLY	1
	GA5052731	SEAL KIT, SUIT 3" BORE X 2 1/2" ROD, SUITS GA3500593, "HYPOWER" BRAND ONLY	1

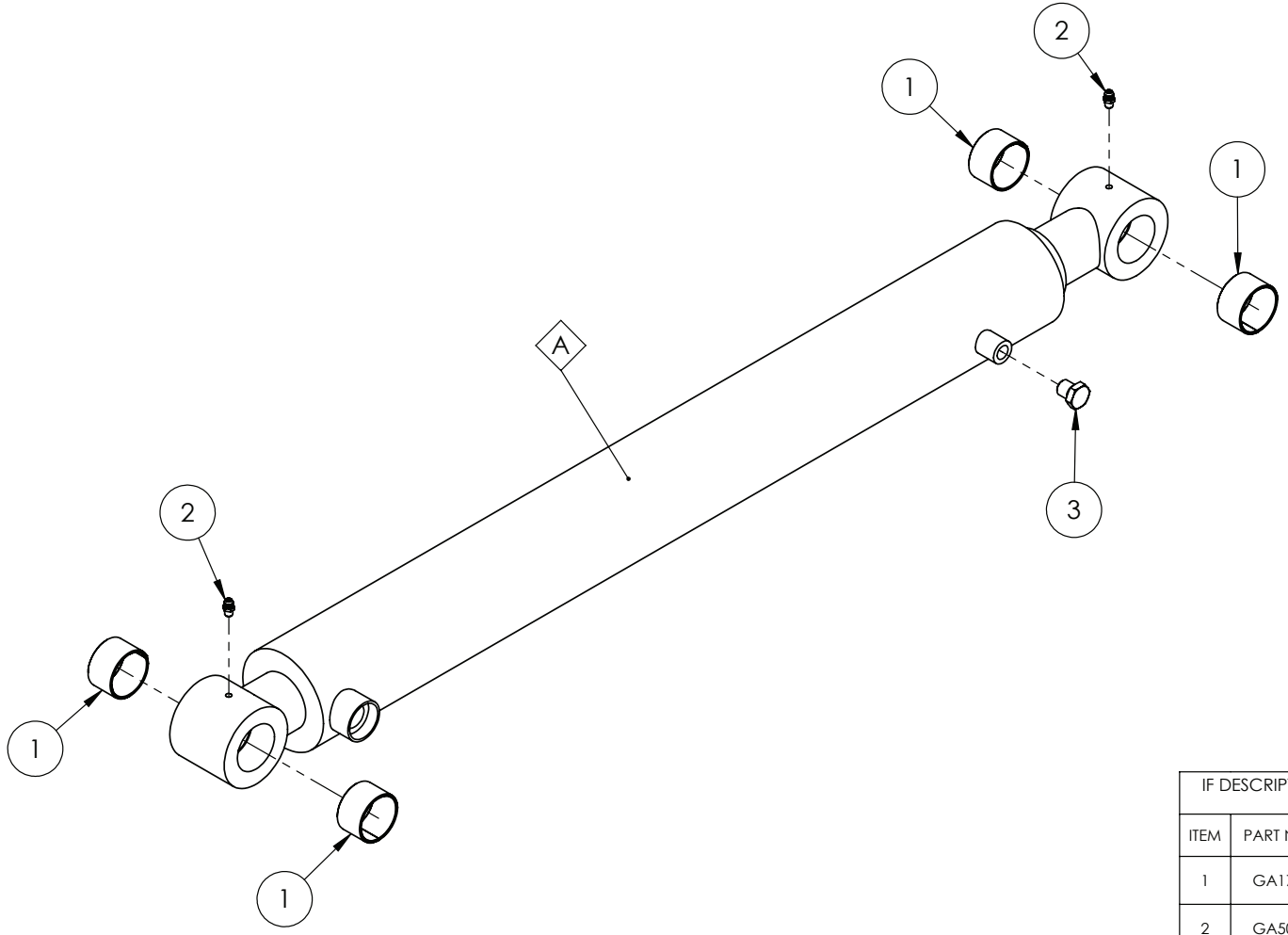

IF DESCRIPTION PREFIX IS ASSEMBLY DRAWING ONLY OR PRODUCTION DRAWING ONLY THE ITEM IS NOT FOR SALE			
ITEM	PART NUMBER	DESCRIPTION	QTY
1	GA1700027	BEARING, GLACIER BUSH, 1 1/2" ID X 1" LONG	4
2	GA5012203	GREASE NIPPLE 1/4" UNF SHORT	2
3	GA3500299	HYDRAULIC ADAPTOR, PLUG, 1/4" BSPP MALE, S73-04	1
GA3500593 GOLDACRES		HYDRAULIC CYLINDER, DISPLACEMENT, 3" BORE, 2.5" ROD, 26" STROKE SUIT 1.5" PINS	REV 01

Cylinder, Hydraulic, Jack

REPLACEMENT PARTS			
ITEM	PART NUMBER	DESCRIPTION	QTY
A	GA5025886	KIT, SEAL, SUIT, HYDRAULIC CYLINDER, "MOTUS", GA3501073	-
B	GA3501795	KIT, CHECK VALVE, DOUBLE LOCK, SUIT, "MOTUS" CYLINDER GA3501073	-

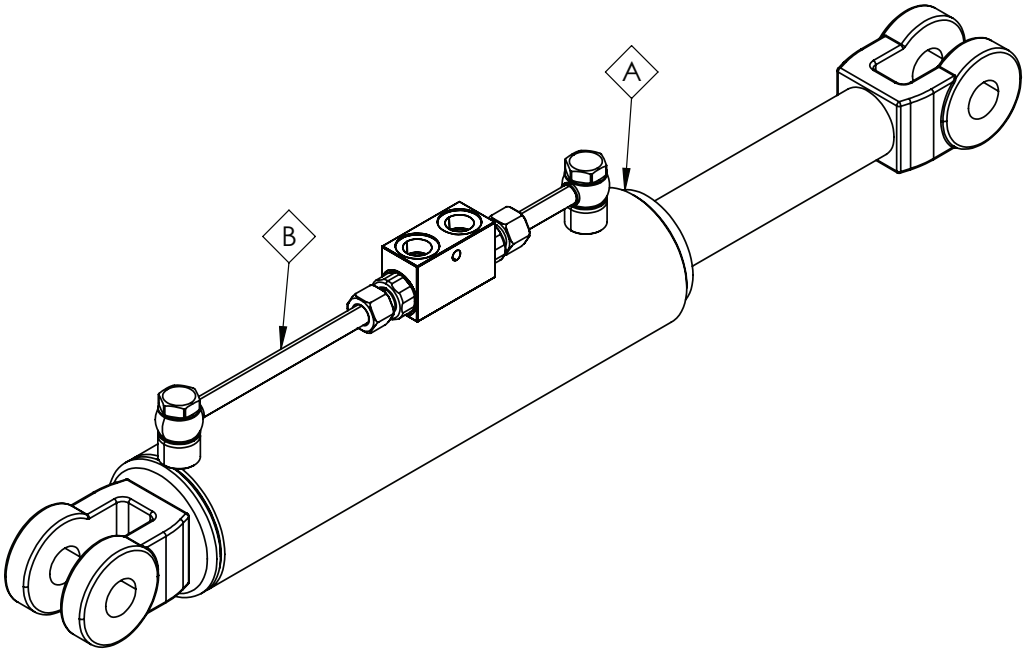

GA3501073 GOLDACRES	HYDRAULIC CYLINDER, BORE 3.0", ROD 1.75", STROKE 12", CLEVIS ENDS, DOUBLE PILOT CHECK VALVE	REV 01

Cylinder, Hydraulic, Yaw, 36mt

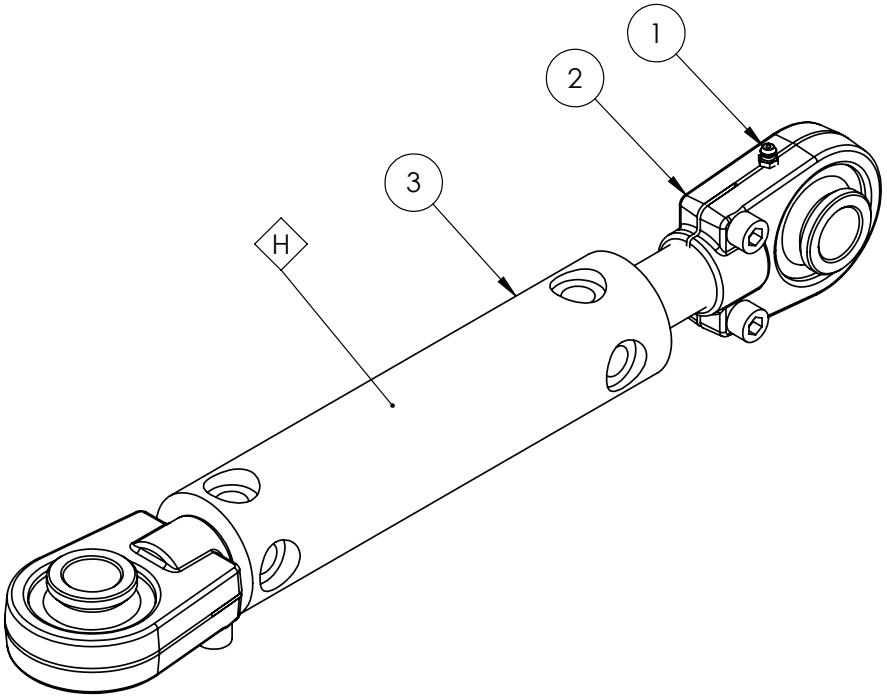

REPLACEMENT PARTS			
ITEM	PART NUMBER	DESCRIPTION	QTY
A	GA5052965	BEARING, ROSE END HOUSING, M28 SCREW ON, SUIT HYDRAULIC CYLINDER & DELTA LINK, INC. BUSHES	1
B	GA5050450	GREASE NIPPLE, 6mm	1
C	GA5021925	SMALL BEARING BUSH, SUIT SCREW ON ROSE END, HYPOWER, R-10424	2
D	GA5006131	SHCS M10 X 30 SS A2-70	2
E	GA5067605	BEARING, RADIAL SPHERICAL PLAIN, 30mm ID X 55mm OD X 32mm THICK, GEG 30 ES 2RS	1
F	GA5067610	CIRCLIP, SUIT BEARING SCREW ON ROSE END, RTW 55	2
G	GA5052966	SALES KIT, BEARING KIT, SUIT SCREW ON ROSE END, CYLINDERS AND DELTA LINKS	-
H	GA5074330	SEAL KIT, SUIT, HYDRAULIC YAW CYLINDER, 2" X 1.25", MOTUS GA5060817	-

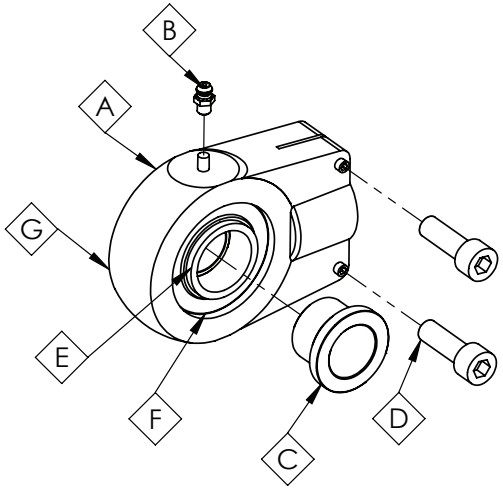

IF DESCRIPTION PREFIX IS ASSEMBLY DRAWING ONLY OR PRODUCTION DRAWING ONLY THE ITEM IS NOT FOR SALE			
ITEM	PART NUMBER	DESCRIPTION	QTY
1	GA5012203	GREASE NIPPLE 1/4" UNF SHORT	2
2	GA5052965	HEAVY DELTA LINK ROSE END	2
3	GA5060817	HYDRAULIC CYLINDER, BORE 2", ROD 1.25", STROKE 117.5mm	1
GA5060817 GOLDACRES		HYDRAULIC CYLINDER, BORE 2", ROD 1.25", STROKE 117.5mm	REV 00

Cylinder, Hydraulic Boom Tilt

REPLACEMENT PARTS			
ITEM	PART NUMBER	DESCRIPTION	QTY
A	GA4551645	BUSH, SPACER, BALL END, ROD, TILT CYLINDER	2
B	GA5012203	GREASE NIPPLE, SHORT, 1/4 UNF, MACH0207	1
C	GA1700029	BEARING, BALL END, 40mm, GE40ES-2RS	1
D	GA5078782	CIRCLIP 62 INTERNAL	1
E	GA3501148	SEAL KIT, HYDRAULIC TILT CYLINDER, GA3500835	-

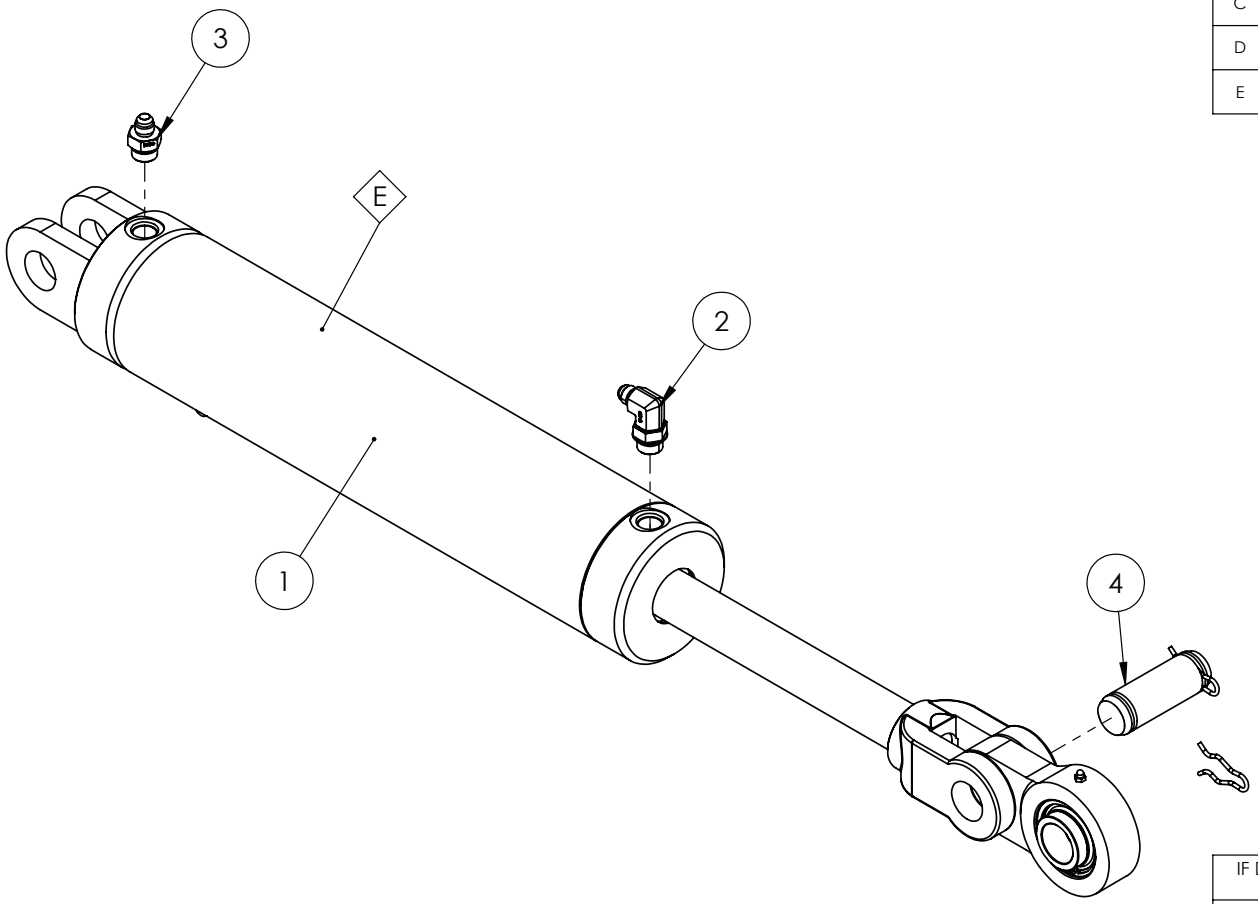

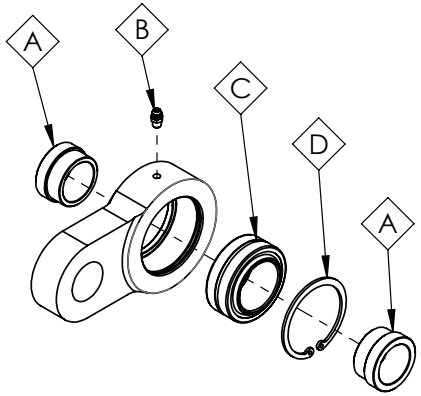

IF DESCRIPTION PREFIX IS ASSEMBLY DRAWING ONLY OR PRODUCTION DRAWING ONLY THE ITEM IS NOT FOR SALE			
ITEM	PART NUMBER	DESCRIPTION	QTY
1	GA3500835	HYDRAULIC CYLINDER, BORE 4", ROD 1.5", STROKE 300mm	1
2	GA3500700	HYDRAULIC ADAPTOR, ELBOW, 90 DEGREE, 9/16" JIC MALE X 3/4" UN MALE O-RING, S91-0912	1
3	GA3500147	HYDRAULIC ADAPTOR, NIPPLE, 9/16" JIC MALE X 3/4" UN MALE O-RING, S90-0912	1
4	GA4551875	PIN, 1 1/4" X 68mm LONG, TILT CYLINDER KNUCKLE	1
GA7800058 GOLDACRES		HYDRAULIC CYLINDER, BORE 4", ROD 1.5", STROKE 300mm, TILT	REV 00

Cylinder, Cushion, Fold, Flange Base Mount

REPLACEMENT PARTS			
ITEM	PART NUMBER	DESCRIPTION	QTY
A	GA3500673	SEAL KIT, HYDRAULIC CYLINDER, SUIT GA3500656, EUREKA ENGINEERED PRODUCTS	-
B	GA5050450	GREASE NIPPLE, 6mm	-
C	GA5052965	BEARING, ROSE END HOUSING, M28 SCREW ON, SUIT HYDRAULIC CYLINDER & DELTA LINK, INC. BUSHES	-
D	GA5052966	SALES KIT, BEARING KIT, SUIT SCREW ON ROSE END, CYLINDERS AND DELTA LINKS	-
E	GA5067605	BEARING, RADIAL SPHERICAL PLAIN, 30mm ID X 55mm OD X 32mm THICK, GEG 30 ES 2RS	-
F	GA5067610	CIRCLIP, SUIT BEARING SCREW ON ROSE END, RTW 55	-
G	GA5021925	SMALL BEARING BUSH, SUIT SCREW ON ROSE END, HYPOWER, R-10424	-
H	GA5006131	SHCS M10 X 30 SS A2-70	-

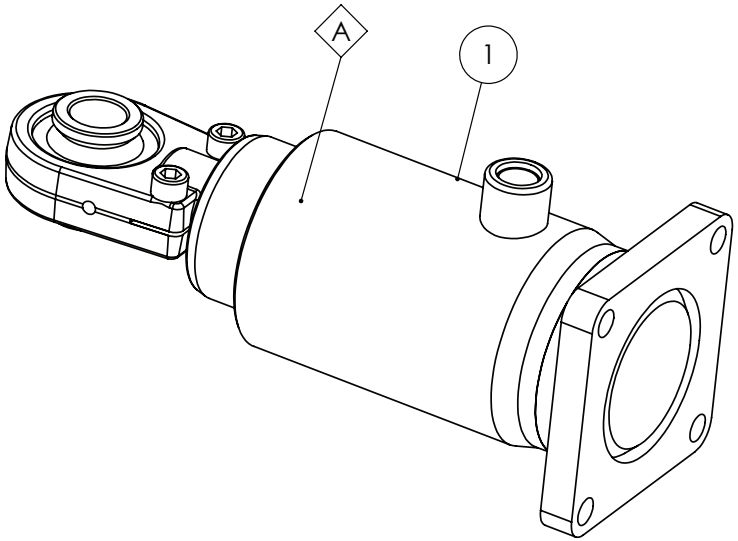

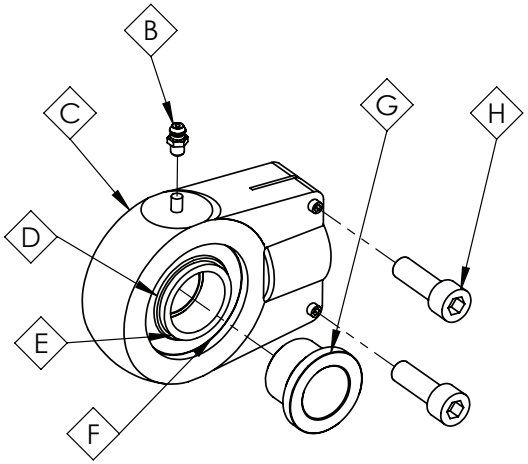

IF DESCRIPTION PREFIX IS ASSEMBLY DRAWING ONLY OR PRODUCTION DRAWING ONLY THE ITEM IS NOT FOR SALE			
ITEM	PART NUMBER	DESCRIPTION	QTY
1	GA3500656	HYDRAULIC CYLINDER, DISPLACEMENT (CUSHION), 3.25" BORE, 3" ROD, FLANGE BASE MOUNT, 1" ROSE END	1
GA3500656 GOLDACRES		HYDRAULIC CYLINDER, DISPLACMENT (CUSHION), 3.25" BORE, 3" ROD, FLANGE BASE MOUNT, 1" ROSE END	REV 00

Cylinder, Hydraulic, Fold, Flange Base Mount, REV-05

REPLACEMENT PARTS			
ITEM	PART NUMBER	DESCRIPTION	QTY
A	GA5025907	SEAL KIT, SUIT, HYDRAULIC CYLINDER, "MOTUS" BRAND ONLY, GA3500655-REV04	-
B	GA5025896	BEARING SPHERICAL, GE25ES-2RS, SUIT, ROSE END, SK35ES-60006461	1
C	GA5025991	BUSH, 40X35X25, SUIT, HYDRAULIC CYLINDER, "MOTUS", GA3500681	2
D	GA5050450	GREASE NIPPLE, 6mm	1

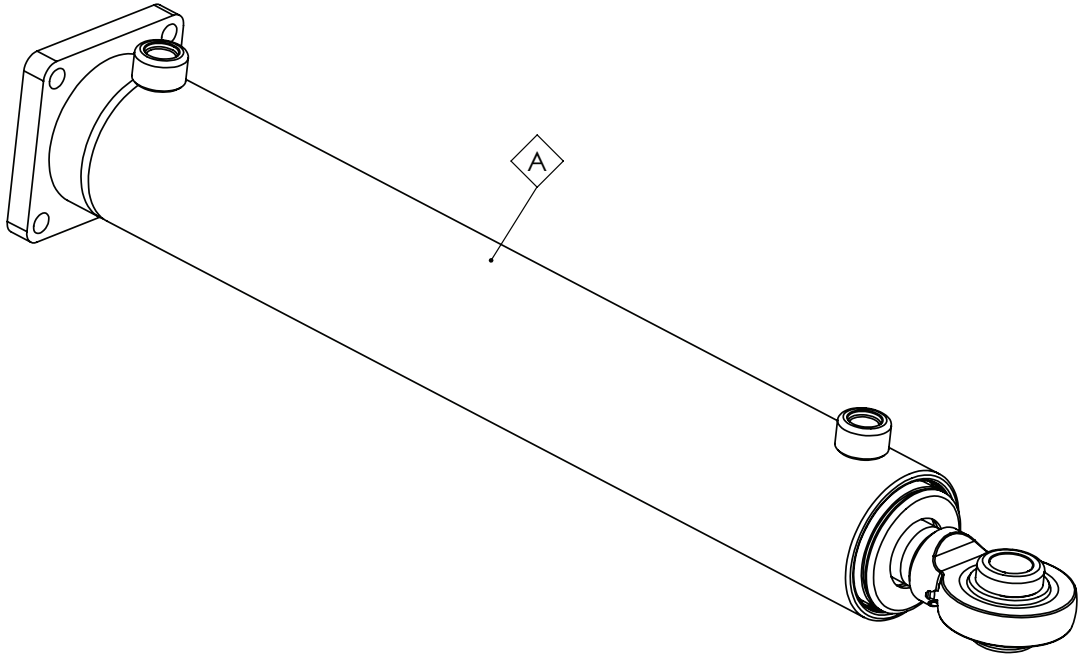

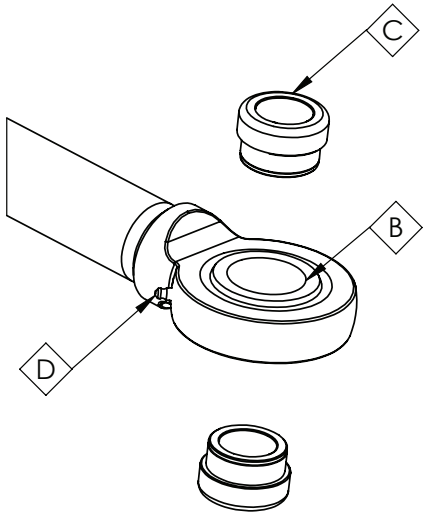

ITEM B IS A PRESSED BEARING

GA3500655 GOLDACRES	HYDRAULIC CYLINDER, DOUBLE ACTING, 3.25" BORE, 1.5" ROD, FLANGE BASE MOUNT, 1" ROSE END	REV 00.D

Cylinder, Hydraulic, Fold, Flange Base Mount, REV-06

REPLACEMENT PARTS			
ITEM	PART NUMBER	DESCRIPTION	QTY
A	GA5025907	SEAL KIT, SUIT, HYDRAULIC CYLINDER, "MOTUS" BRAND ONLY, GA3500655	-
B	GA5050450	GREASE NIPPLE, 6mm	1
C	GA5067605	BEARING, RADIAL SPHERICAL PLAIN, 30mm ID X 55mm OD X 32mm THICK, GEG 30 ES 2RS	1
D	GA5067610	CIRCLIP, SUIT BEARING SCREW ON ROSE END, RTW 55	2
E	GA5026034	BUSH, ROSE END, 30OD X 25ID	2

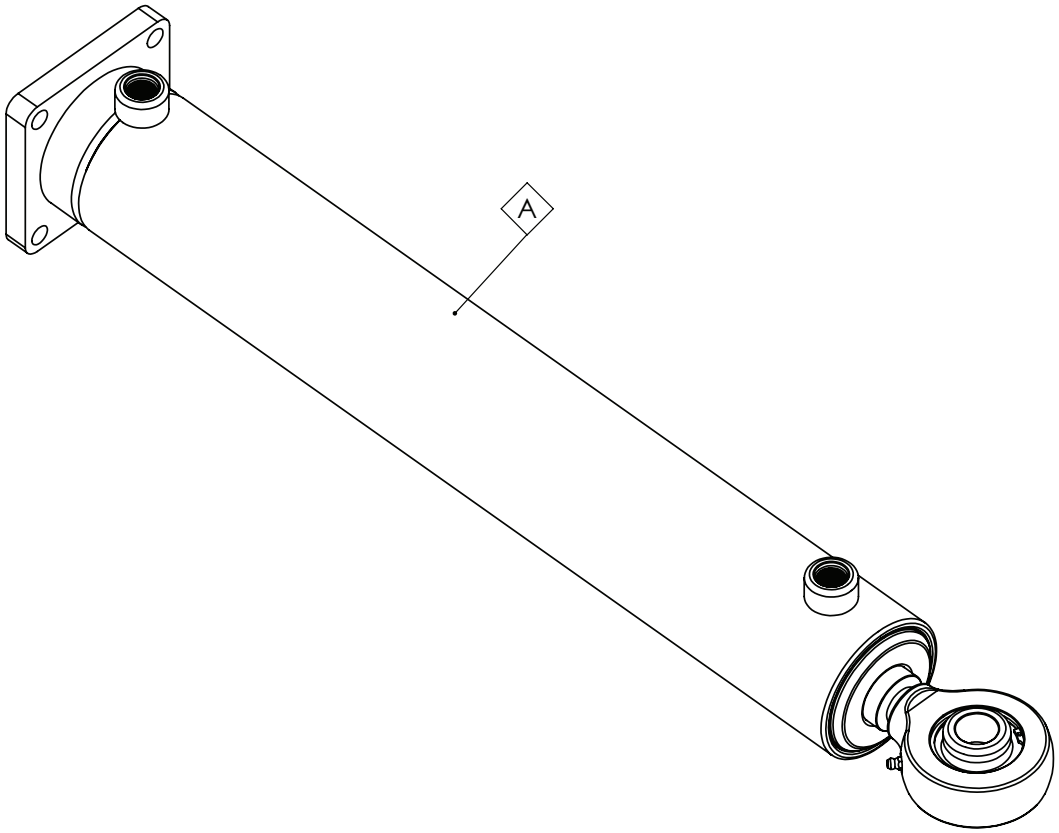

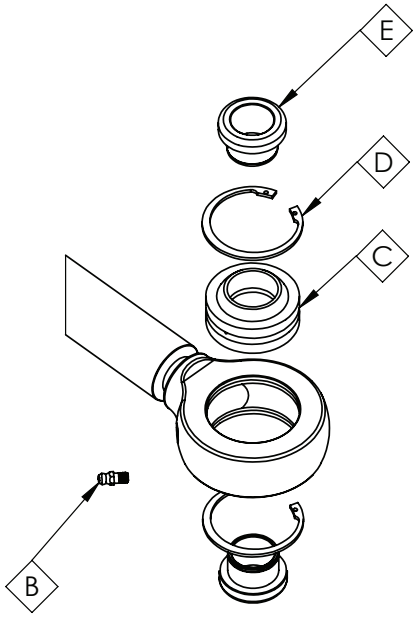

GA3500655 GOLDACRES	HYDRAULIC CYLINDER, DOUBLE ACTING, 3.25" BORE, 1.5" ROD, FLANGE BASE MOUNT, 1" ROSE END	REV 06

Cylinder, Hydraulic Yaw, 42mt & 48mt

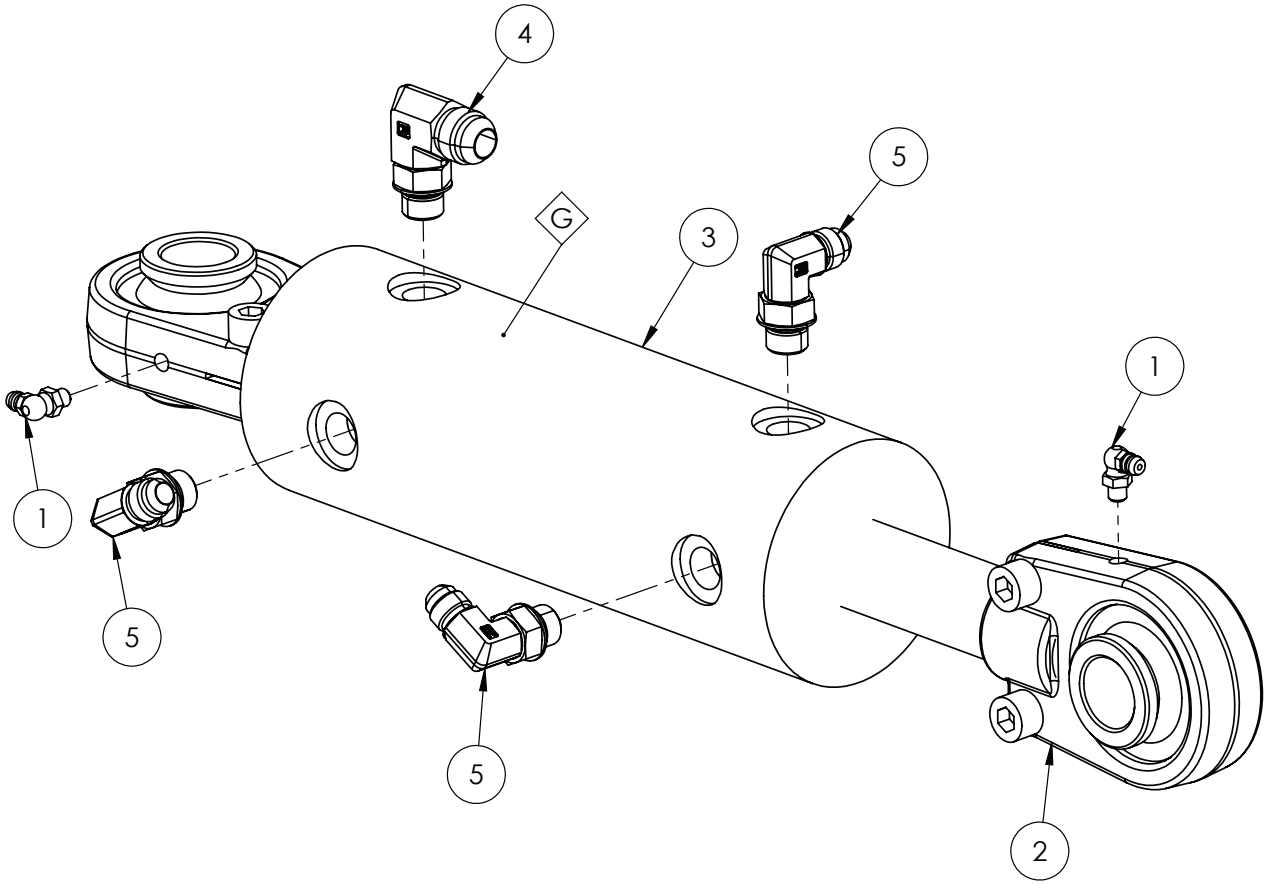

REPLACEMENT PARTS			
ITEM	PART NUMBER	DESCRIPTION	QTY
A	GA5052965	BEARING, ROSE END HOUSING, M28 SCREW ON, SUIT HYDRAULIC CYLINDER & DELTA LINK, INC. BUSHES	1
B	GA5050450	GREASE NIPPLE, 6mm	1
C	GA5021925	SMALL BEARING BUSH, SUIT SCREW ON ROSE END, HYPOWER, R-10424	2
D	GA5006131	SHCS M10 X 30 SS A2-70	2
E	GA5067605	BEARING, RADIAL SPHERICAL PLAIN, 30mm ID X 55mm OD X 32mm THICK, GEG 30 ES 2RS	1
F	GA5067610	CIRCLIP, SUIT BEARING SCREW ON ROSE END, RTW 55	1
G	GA3501270	SEAL KIT, SUIT, HYDRAULIC CYLINDER, GA5018540 & GA5060818, "MOTUS", SK300125	-
-	GA5052966	SALES KIT, BEARING KIT, SUIT SCREW ON ROSE END, CYLINDERS AND DELTA LINKS	-

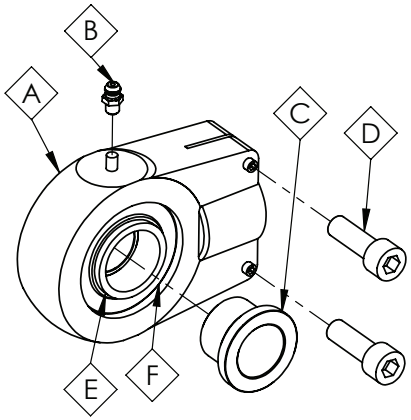

IF DESCRIPTION PREFIX IS ASSEMBLY DRAWING ONLY OR PRODUCTION DRAWING ONLY THE ITEM IS NOT FOR SALE			
ITEM	PART NUMBER	DESCRIPTION	QTY
1	GA5009637	GREASE NIPPLE, ELBOW, 90 DEGREE, 1/4 UNF MALE, MACH0207	2
2	GA5052965	HEAVY DELTA LINK ROSE END	2
3	GA5060818	HYDRAULIC CYLINDER, BORE 3", ROD 1.25", STROKE 117.5mm	1
4	GA3500802	HYDRAULIC ADAPTOR, ELBOW, 90 DEGREE, 3/4" JIC MALE X 9/16" UN MALE O-RING, S91-1209	1
5	GA3500716	HYDRAULIC ADAPTOR, ELBOW, 90 DEGREE, 9/16" JIC MALE X 9/16" UN MALE O-RING, S91-0909	3
GA5060818 GOLDACRES		HYDRAULIC YAW CYLINDER LARGE 3" WITH BALL ENDS	REV 00

Cylinder, Hydraulic Boom Tilt, 48m

REPLACEMENT PARTS			
ITEM	PART NUMBER	DESCRIPTION	QTY
A	GA5026270	SEAL KIT, SUIT, HYDRAULIC CYLINDER, GA3501852, "EUREKA ENG" BRAND ONLY	-
B	GA5026281	KIT, BUSH & BEARING, WITH CIRCLIP, SUIT, 'EUREKA BRAND' GA3501852	-

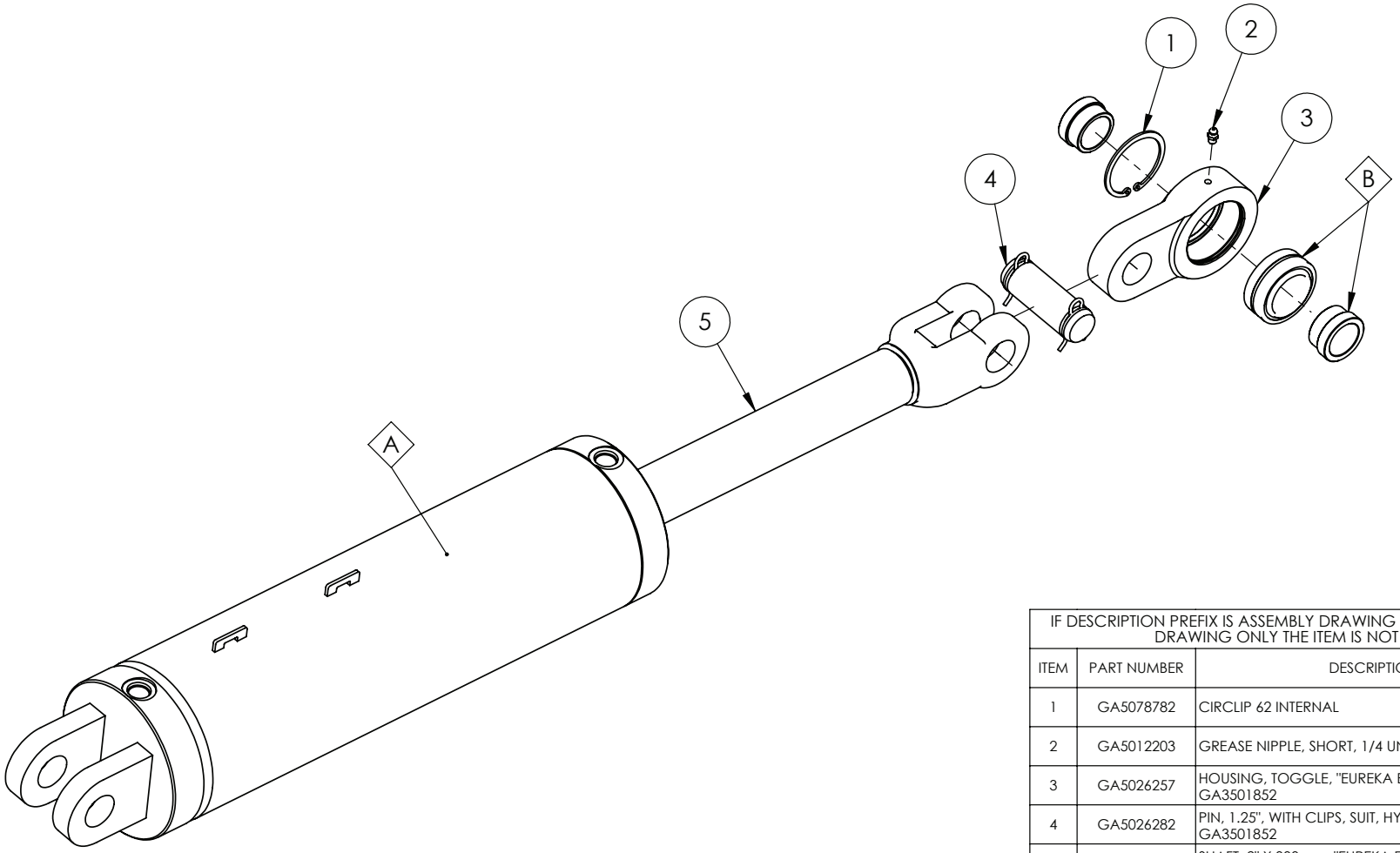

IF DESCRIPTION PREFIX IS ASSEMBLY DRAWING ONLY OR PRODUCTION DRAWING ONLY THE ITEM IS NOT FOR SALE			
ITEM	PART NUMBER	DESCRIPTION	QTY
1	GA5078782	CIRCLIP 62 INTERNAL	1
2	GA5012203	GREASE NIPPLE, SHORT, 1/4 UNF, MACH0207	1
3	GA5026257	HOUSING, TOGGLE, "EUREKA ENG", SUITS, GA3501852	1
4	GA5026282	PIN, 1.25", WITH CLIPS, SUIT, HYDRAULIC CYLINDER, GA3501852	1
5	GA5026255	SHAFT, 2" X 300mm, "EUREKA ENG", SUIT, GA3501852	1
GA3501852 GOLDACRES		HYDRAULIC CYLINDER, BORE 5", ROD 2.0", STROKE 300mm	REV 00

Cylinder, Hydraulic, Second Stage Fold, 48mt

REPLACEMENT PARTS			
ITEM	PART NUMBER	DESCRIPTION	QTY
A	GA3500684	SEAL KIT, HYDRAULIC CYLINDER, SUIT GA3500476, EUREKA ENGINEERED PRODUCTS	-
	GA3501584	SEAL KIT, SUIT, HYDRAULIC CYLINDER, GA3501082, "MOTUS" BRAND	-

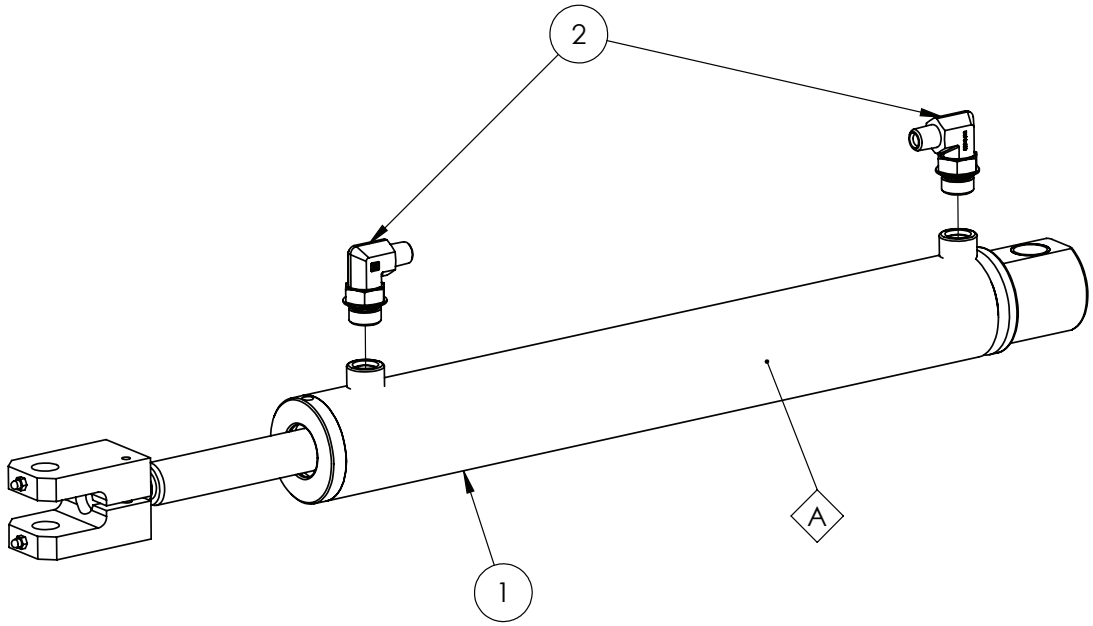

IF DESCRIPTION PREFIX IS ASSEMBLY DRAWING ONLY OR PRODUCTION DRAWING ONLY THE ITEM IS NOT FOR SALE			
ITEM	PART NUMBER	DESCRIPTION	QTY
1	GA3500476	HYDRAULIC CYLINDER, BORE 2", ROD 1", STROKE 395mm, EUREKA ENGINEERING BRAND	1
	GA3501082	HYDRAULIC CYLINDER, 2.5" X 1.25" X 395mm STROKE, 3RD STAGE FOLD, 48M	1
2	GA3500348	HYDRAULIC ADAPTOR, ELBOW, 90 DEGREE, 1/4" BSPT MALE X 3/4" UN MALE O-RING	2
GA7800161 GOLDACRES		HYDRAULIC CYLINDER, 2" BORE, 1" ROD, 395mm STROKE, 48MT, THIRD STAGE FOLD	REV 00

GA3501082: SERIAL BREAK

PRAIRIE PRO S2 - FROM S/N 203743

Cylinder, Hydraulic, Third Stage Fold, 48mt

REPLACEMENT PARTS			
ITEM	PART NUMBER	DESCRIPTION	QTY
A	GA3501584	SEAL KIT, SUIT, HYDRAULIC CYLINDER, GA3501082, "MOTUS" BRAND	-

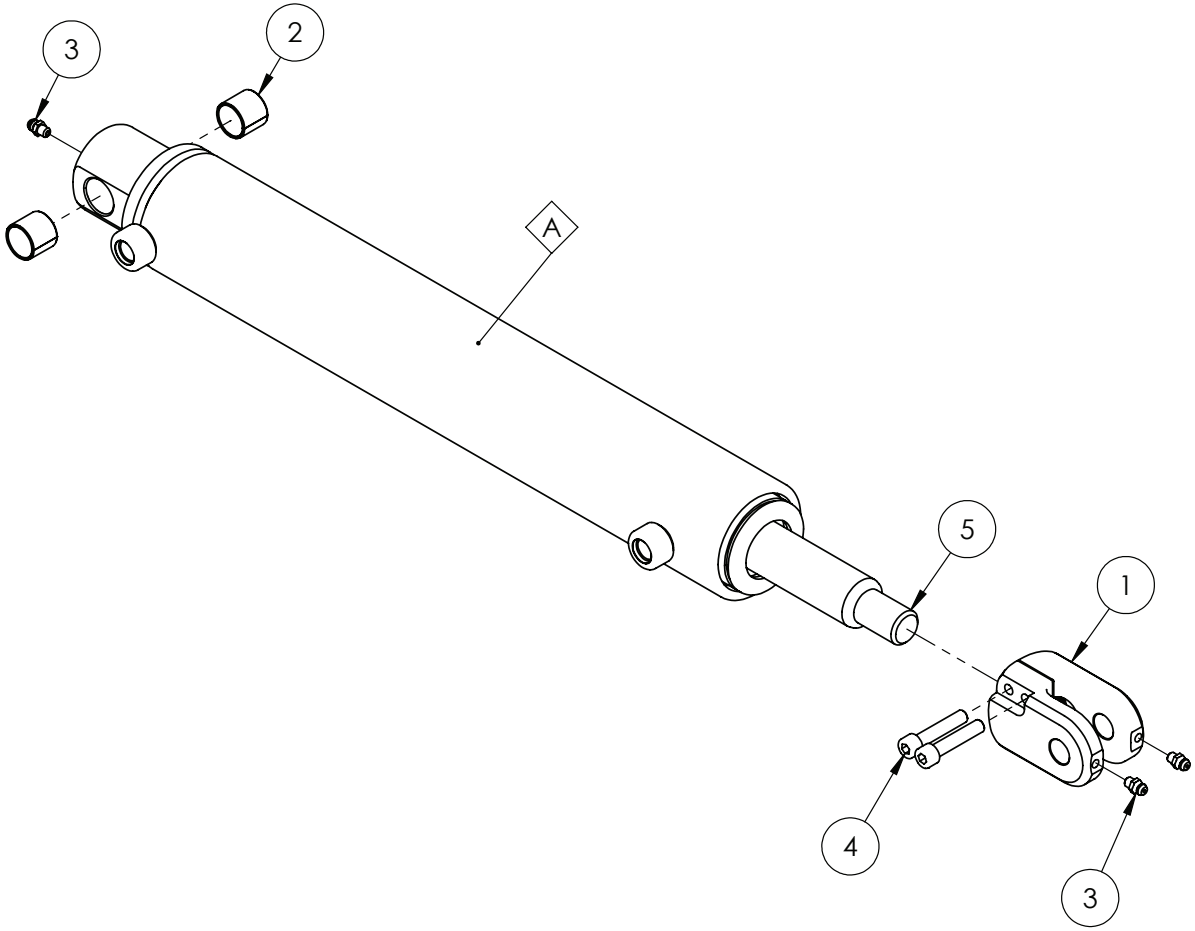

IF DESCRIPTION PREFIX IS ASSEMBLY DRAWING ONLY OR PRODUCTION DRAWING ONLY THE ITEM IS NOT FOR SALE			
ITEM	PART NUMBER	DESCRIPTION	QTY
1	GA3501886	CLEVIS, SUIT, HYDRAULIC CYLINDER, "MOTUS", GA3501082	1
2	GA3501888	GLACIER BUSH 20 X 23 X 20W	2
3	GA5050450	GREASE NIPPLE, 6mm	3
4	GA5011487	SHCS M8 X 40 GR 12.9 ZP	2
5	GA3501885	SHAFT, 1.25", SUIT, HYDRAULIC CYLINDER, "MOTUS" BRAND ONLY, GA3501082	1
GA3501082 GOLDACRES		HYDRAULIC CYLINDER, 2.5" X 1.25" X 395, 3RD STAGE FOLD, 48m	REV 00

Cylinder, Hydraulic, Bi-Fold, RIVX

REPLACEMENT PARTS			
ITEM	PART NUMBER	DESCRIPTION	QTY
A	GA3501077	SEAL KIT, HYDRAULIC CYLINDER, BI-FOLD CUSHION, GA3500681	1

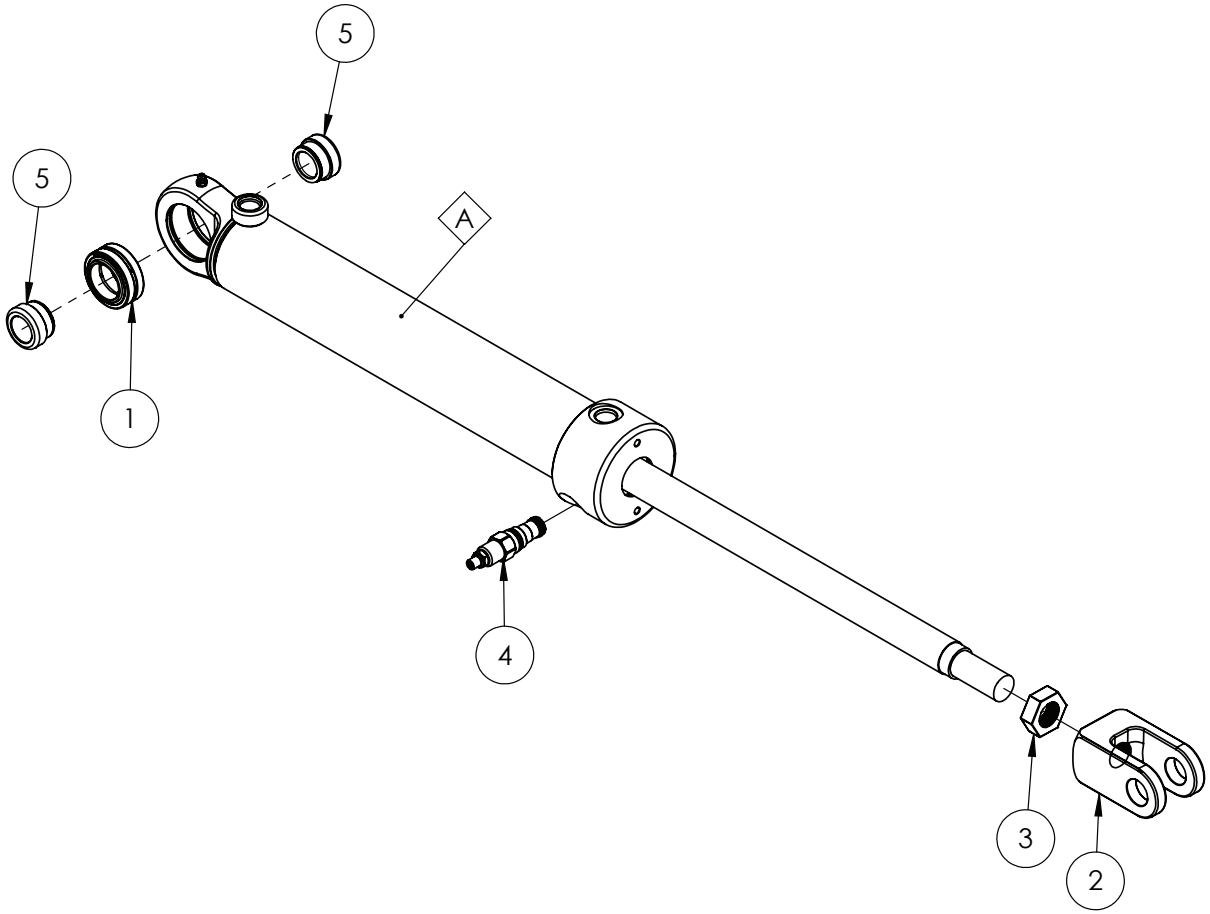

IF DESCRIPTION PREFIX IS ASSEMBLY DRAWING ONLY OR PRODUCTION DRAWING ONLY THE ITEM IS NOT FOR SALE			
ITEM	PART NUMBER	DESCRIPTION	QTY
1	GA3501081	BEARING, SPHERICAL, HYDRAULIC CYLINDER, GA3500681	1
2	GA3501078	CLEVIS, SCREW ON 1 1/2" UNF, HYDRAULIC CYLINDER, GA3500681	1
3	GA3501079	LOCK NUT, 1 1/2" UNF, HYDRAULIC CYLINDER, GA3500681	1
4	GA3501080	NEEDLE VALVE, HYDRAULIC CYLINDER CUSHION CONTROL, GA3500681	1
5	GA5025991	BUSH, 40X35X25, SUIT, HYDRAULIC CYLINDER, "MOTUS", GA3500681	2
GA3500681 GOLDACRES		HYDRAULIC CYLINDER, 2.5" BORE, 1 1/4" ROD, 350mm STROKE, 50mm CUSHION, BI-FOLD, TRITECH, MY20	REV 03

Cylinder, Breakaway

REPLACEMENT PARTS			
ITEM	PART NUMBER	DESCRIPTION	QTY
A	GA5074565	SEAL KIT, SUIT, HYDRAULIC CYLINDER, 11/2" BORE 1" ROD, BREAKAWAY, GA3500683	-

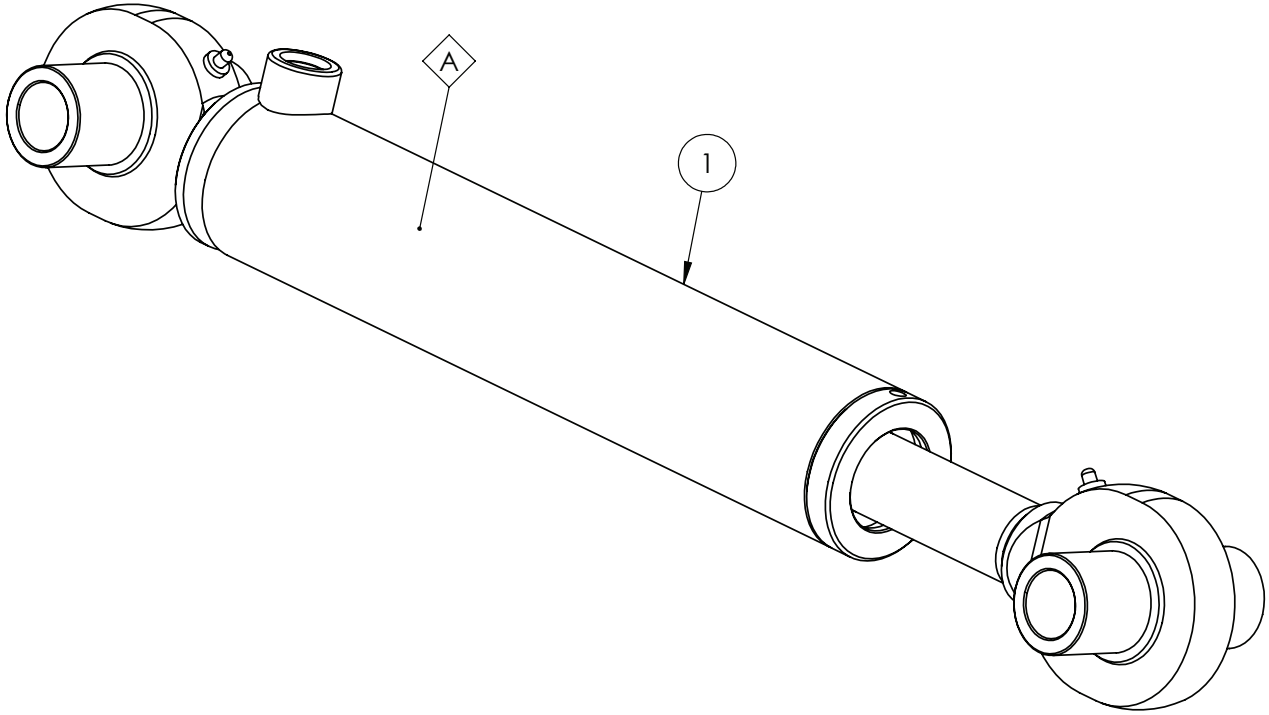

IF DESCRIPTION PREFIX IS ASSEMBLY DRAWING ONLY OR PRODUCTION DRAWING ONLY THE ITEM IS NOT FOR SALE			
ITEM	PART NUMBER	DESCRIPTION	QTY
1	GA3500683	HYDRAULIC CYLINDER, 1 1/2" BORE, 1" ROD, 182mm STROKE, BI-FOLD BREAKAWAY, TRITECH, MY20	1
GA3500683 GOLDACRES		HYDRAULIC CYLINDER, 1 1/2" BORE, 1" ROD, 182mm STROKE, BI-FOLD BREAKAWAY, TRITECH, MY20	REV

Cylinder, Hydraulic, Centre Level

REPLACEMENT PARTS			
ITEM	PART NUMBER	DESCRIPTION	QTY
A	GA3501580	SEAL KIT, SUIT, HYDRAULIC CYLINDER, GA3500477, "BICELLI GECO" BRAND ONLY, 6325.SK	-

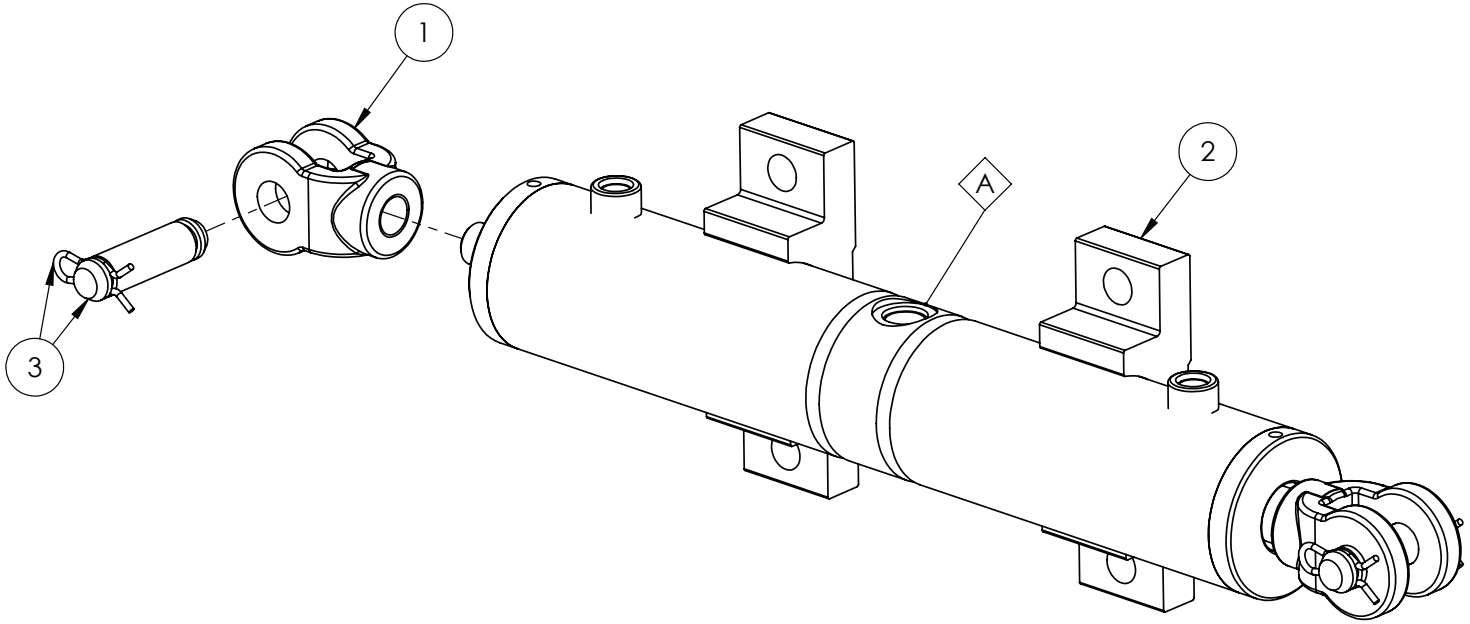

IF DESCRIPTION PREFIX IS ASSEMBLY DRAWING ONLY OR PRODUCTION DRAWING ONLY THE ITEM IS NOT FOR SALE			
ITEM	PART NUMBER	DESCRIPTION	QTY
1	GA5026493	CLEVIS, 72X36X46, SUIT, HYDRAULIC CYLINDER, "BICELLI GECO", GA3500477	2
2	GA3501581	FOOT PAD, HYDRAULIC CYLINDER, CENTRE LEVEL, GA3500477, "BICELLI GECO" BRAND ONLY	2
3	GA3501582	PIN, 3/4" X 14mm, HYDRAULIC CYLINDER, GA3500477, "BICELLI GECO", BRAND ONLY	2
GA3500477 GOLDACRES		HYDRAULIC CYLINDER, CENTRE LEVEL 2016	REV 00.B

Cylinder, Hydraulic, Boom Latch

REPLACEMENT PARTS			
ITEM	PART NUMBER	DESCRIPTION	QTY
A	GA3500671	SEAL KIT, HYDRAULIC CYLINDER, SUIT GA3500480, EUREKA ENGINEERED PRODUCTS	-
B	GA3501802	SEAL KIT, SUIT, HYDRAULIC CYLINER, "MOTUS" BRAND ONLY, GA3500480	-

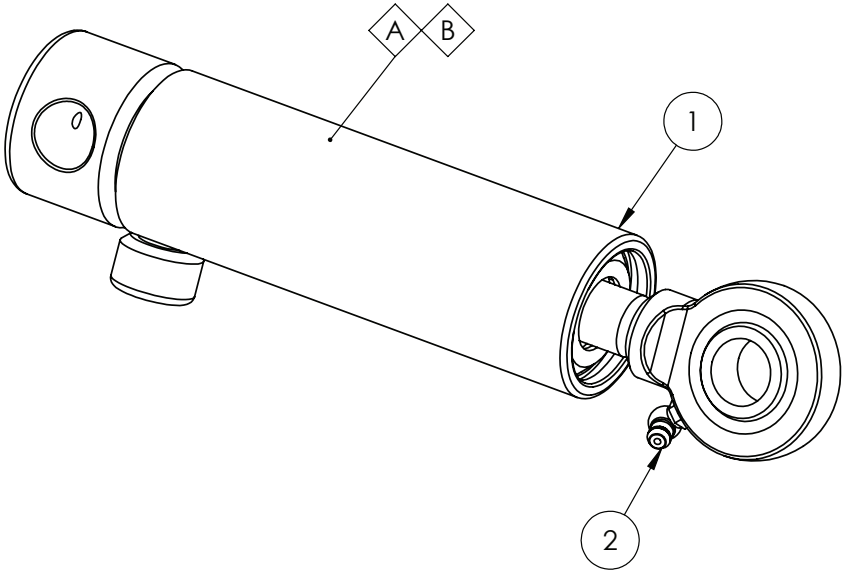

WARNING!
HEAD UNDER SPRING FORCE.
TAKE CARE ON ASSEMBLY AND DISASSEMBELY

IF DESCRIPTION PREFIX IS ASSEMBLY DRAWING ONLY OR PRODUCTION DRAWING ONLY THE ITEM IS NOT FOR SALE			
ITEM	PART NUMBER	DESCRIPTION	QTY
1	GA3500480	HYDRAULIC CYLINDER, BORE 1.5", ROD 0.75", STROKE 28mm, DISPLACEMENT, SPRING RETURN	1
2	GA5051970	GREASE NIPPLE, 6mm, 90 DEG	1
GA3500480 GOLDACRES		HYDRAULIC CYLINDER, BORE 1.5", ROD 0.75", STROKE 28mm, DISPLACEMENT, SPRING RETURN	REV 04

Hydraulic Pressure Filter, Hydac

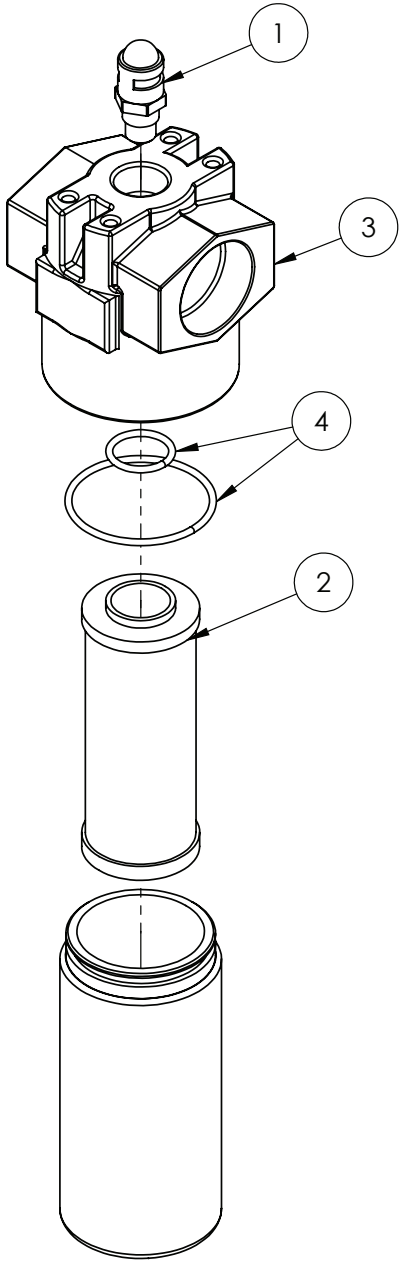

IF DESCRIPTION PREFIX IS ASSEMBLY DRAWING ONLY OR PRODUCTION DRAWING ONLY THE ITEM IS NOT FOR SALE			
ITEM	PART NUMBER	DESCRIPTION	QTY
1	GA3501115	CLOGGING INDICATOR, HYDRAULIC PRESSURE FILTER, PRO S2, HYDAC, 316885	1
2	GA3501114	FILTER ELEMENT, HYDRAULIC PRESSURE FILTER, PRO, S2, HYDAC, 1250491	1
3	GA3500939	HYDRAULIC PRESSURE FILTER, 10 MICRON, MANUAL CLOGGING INDICATOR, HYDAC DF240	1
4	GA3501116	REPAIR SEAL KIT, HYDRAULIC PRESSURE FILTER, PRO S2, HYDAC, 305264	1
GA3500939 GOLDACRES		HYDRAULIC PRESSURE FILTER, 10 MICRON, MANUAL CLOGGING INDICATOR, HYDAC DF240	REV 00

Hydraulic Fitting, Tractor Remote

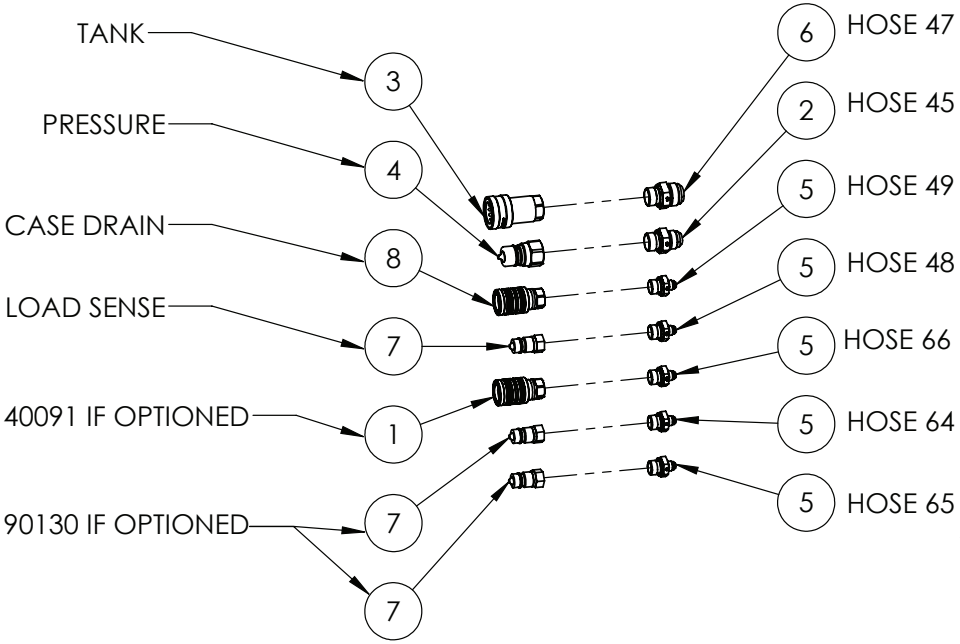

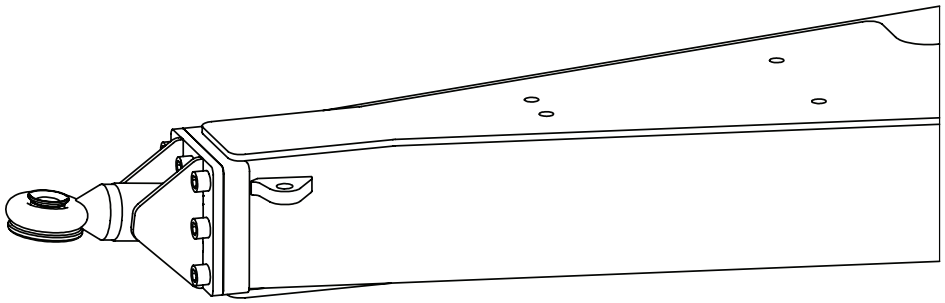

IF DESCRIPTION PREFIX IS ASSEMBLY DRAWING ONLY OR PRODUCTION DRAWING ONLY THE ITEM IS NOT FOR SALE			
ITEM	PART NUMBER	DESCRIPTION	QTY
1	GA5077999	08 BSPPF FEMALE QRC/POPPET, R81-08F	1
2	GA3500711	HYDRAULIC ADAPTOR NIPPLE, 3/4" BSP O-RING X 1 1/16" JIC, S74-1217	1
3	GA3501093	HYDRAULIC ADAPTOR, 3/4" TYPE A QUICK COUPLER FEMALE X 3/4" BSPP FEMALE, R82-12F	1
4	GA3501092	HYDRAULIC ADAPTOR, 3/4" TYPE A QUICK COUPLER MALE X 3/4" BSPP FEMALE, R82-12M	1
5	GA3500718	HYDRAULIC ADAPTER, NIPPLE, 1/2" BSPP MALE X 9/16" JIC, S74-0809	5
6	GA3501140	HYDRAULIC ADAPTER, NIPPLE, 3/4" BSPP O-RING MALE X 1 5/16" JIC MALE, S74-1221	1
7	GA5078000	QUICK CONNECT FITTING, 1/2" MALE TIP X 1/2" FEMALE THREAD, R81-08M	3
8	GA5078001	QUICK RELEASE COUPLING, BALL CHECK VALVE, PUSH/PULL, FEMALE BODY, 1/2" BSPP FEMALE, R81-08P	1
GA4951570 GOLDACRES		ASSEMBLY DRAWING ONLY, TRACTOR REMOTES, HYDRAULIC FITTINGS, PRAIRIE PRO S2	REV 00.A

Hydraulic, ID Tags

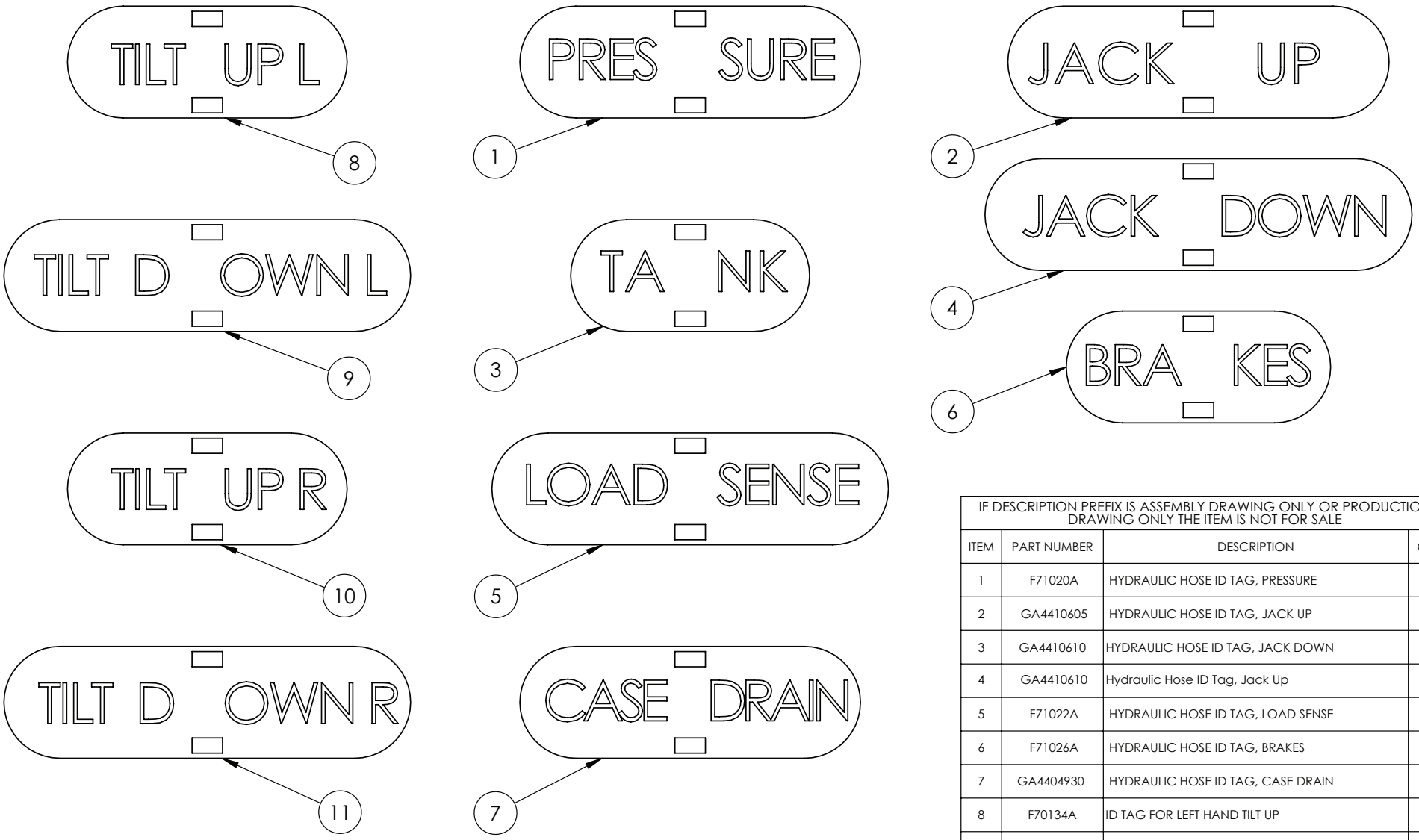

FIT 8 9 10 11
IF 30001 AND 30030 OPTIONED

IF DESCRIPTION PREFIX IS ASSEMBLY DRAWING ONLY OR PRODUCTION DRAWING ONLY THE ITEM IS NOT FOR SALE			
ITEM	PART NUMBER	DESCRIPTION	QTY
1	F71020A	HYDRAULIC HOSE ID TAG, PRESSURE	1
2	GA4410605	HYDRAULIC HOSE ID TAG, JACK UP	1
3	GA4410610	HYDRAULIC HOSE ID TAG, JACK DOWN	1
4	GA4410610	Hydraulic Hose ID Tag, Jack Up	1
5	F71022A	HYDRAULIC HOSE ID TAG, LOAD SENSE	1
6	F71026A	HYDRAULIC HOSE ID TAG, BRAKES	1
7	GA4404930	HYDRAULIC HOSE ID TAG, CASE DRAIN	1
8	F70134A	ID TAG FOR LEFT HAND TILT UP	1
9	GA4000407	ID TAG FOR LEFT HAND TILT DOWN	1
10	F70135A	ID TAG FOR RIGHT HAND TILT UP	1
11	GA4000408	ID TAG FOR RIGHT HAND TILT DOWN	1
GA7800084 GOLDACRES		HYDRAULIC HOSE LABELS, TRAILING SPRAYER	REV 01

Pneumatic Manifold

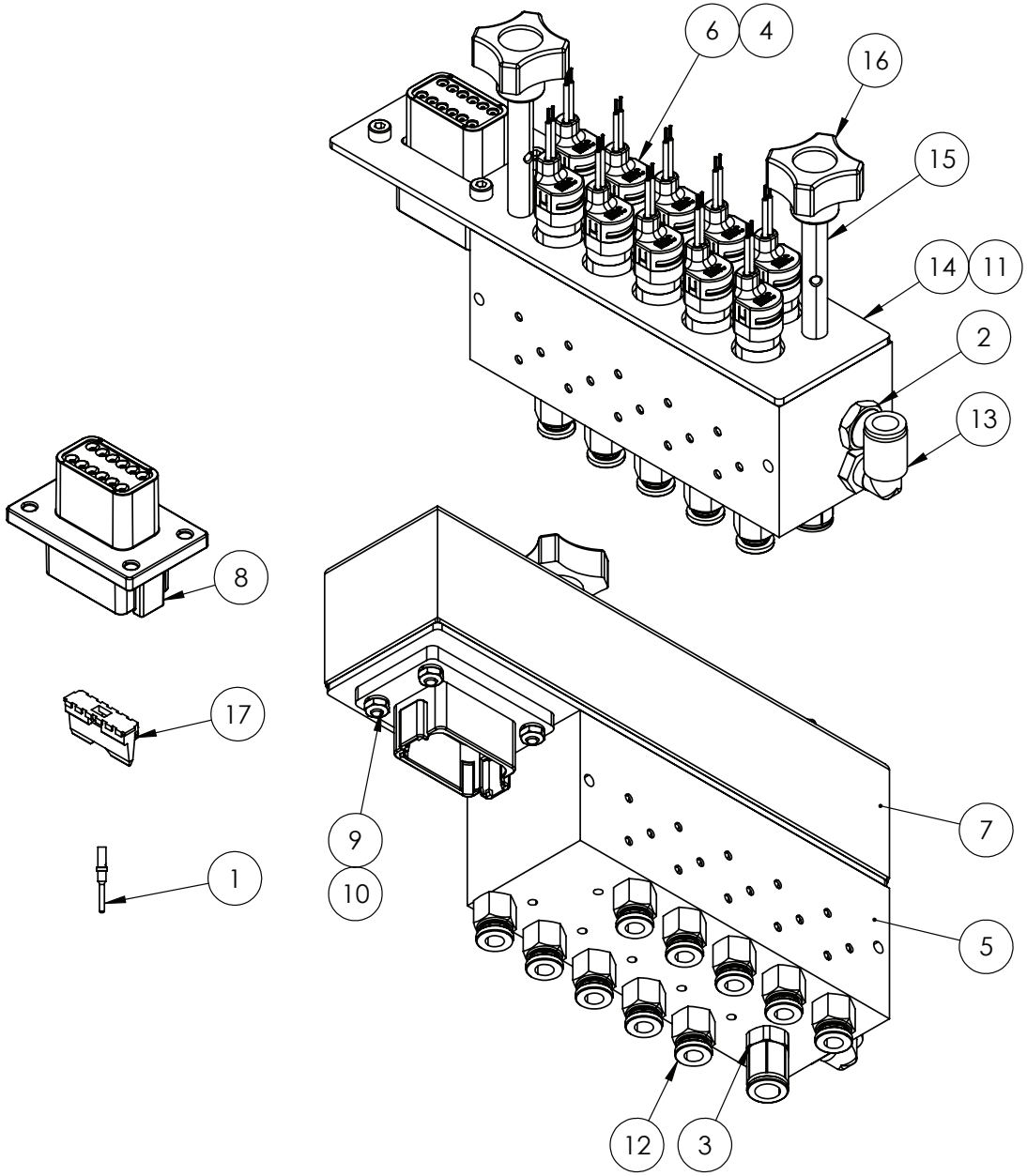

IF DESCRIPTION PREFIX IS ASSEMBLY DRAWING ONLY OR PRODUCTION DRAWING ONLY THE ITEM IS NOT FOR SALE			
1	GA5061200	PIN, MALE, SOLID, NICKEL, NUMBER 20, DEUTSCH	12
2	GA5071207	BREATHER, SILENCER, 1/4 BUTTON	1
3	GA3501188	PLUG, 1/4 BSPP, INTERNAL HEX	1
4	GA5074425	O-RING, NITRILE, BULLET VALVE 3/2, GA7000082	10
5	GA7000081	MANIFOLD, 10 SECTION, BLACK, GA7000029	1
6	GA7000082	PNEUMATIC VALVE, 3/2 BULLET, WITH DIODE AND LED, MAC	10
7	GA5074405	COVER, PNEUMATIC MANIFOLD, 10 SECTION, GA7000029	1
8	GA3000878	RECEPTACLE, 12 PINS, DT FLANGE MOUNT, DEUTSCH, DT04-12PA-L012	1
9	GA5049025	NUT M4 NYLOC SS	4
10	GA5011363	SHCS M4 X 16 GR12.9 ZP	4
11	GA5074410	GASKET, MANIFOLD COVER, 1.5mm RUBBER, GA7000029	1
12	GA5071195	STRAIGHT ADAPTOR PUSH IN 6mm X 1/8 MALE THREAD	10
13	GA5052690	PNEUMATIC FITTING, ELBOW, 90 DEGREE, 1/4 BSP MALE X 8mm PUSH IN TYPE, METAL	1
14	GA5074415	RETAINER PLATE, BULLET VALVE, GA7000029	1
15	GA5074420	ROD, COVER MOUNT, BULLET VALVE MANIFOLD, M6 MALE X M6 FEMALE, GA7000029	2
16	GA0500124	STAR BOLT, M6 X 10mm MALE	2
17	GA5070590	WEDGE LOCK, GREEN, 12 WAY SUIT PINS, DEUTSCH	1
GA7000029 GOLDACRES		PNEUMATIC MANIFOLD, RAPID FIRE, 10 SECTION, BULLET VALVE	REV 00.C

Air Tank, 0.9L, 10 Bar, Rapid Fire

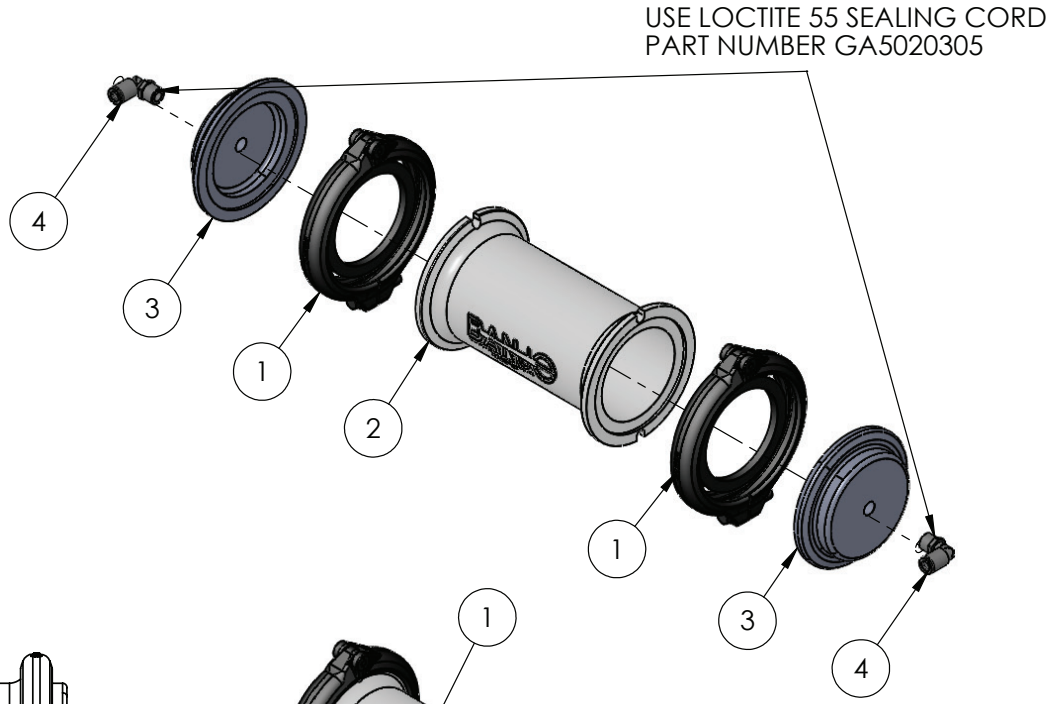

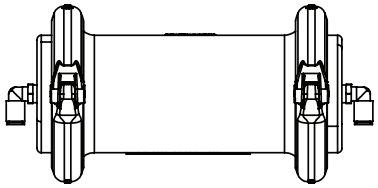

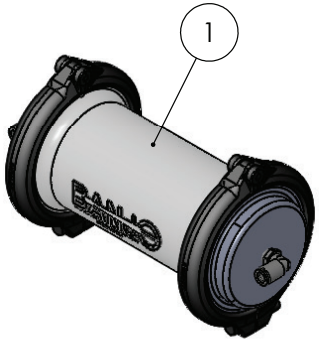

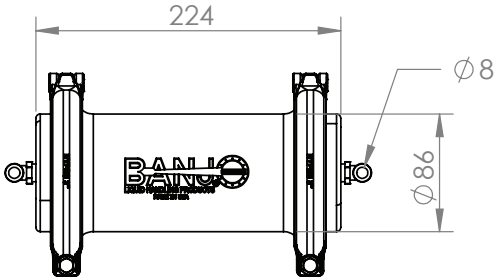

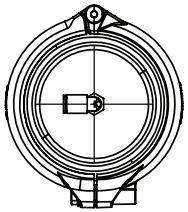

IF DESCRIPTION PREFIX IS ASSEMBLY DRAWING ONLY OR PRODUCTION DRAWING ONLY THE ITEM IS NOT FOR SALE			
ITEM	PART NUMBER	DESCRIPTION	QTY
1	GA2000116	FLANGE CLAMP, AND GASKET, 3", SERIES 300, HYPRO	2
2	GA2000139	PLUMBING FITTING, 3" X 3" FULL PORT FLANGE X 7" LONG, BANJO M300CPG7	1
3	GA2000140	PLUMBING FITTING, 3' MANIFOLD PLUG WITH 1/4" BSP FEMALE, FLANGE, MADE FROM GA5077880 BANJO M300PLG	2
4	GA5052690	PNEUMATIC FITTING, ELBOW, 90 DEGREE, 1/4 BSP MALE X 8mm PUSH TYPE, METAL	2
GA4949330 GOLDACRES		AIR TANK, 0.9L, PLASTIC, 10 BAR, SUIT RAPID FIRE 3TS PRO	REV 01

Air Filter, 1”

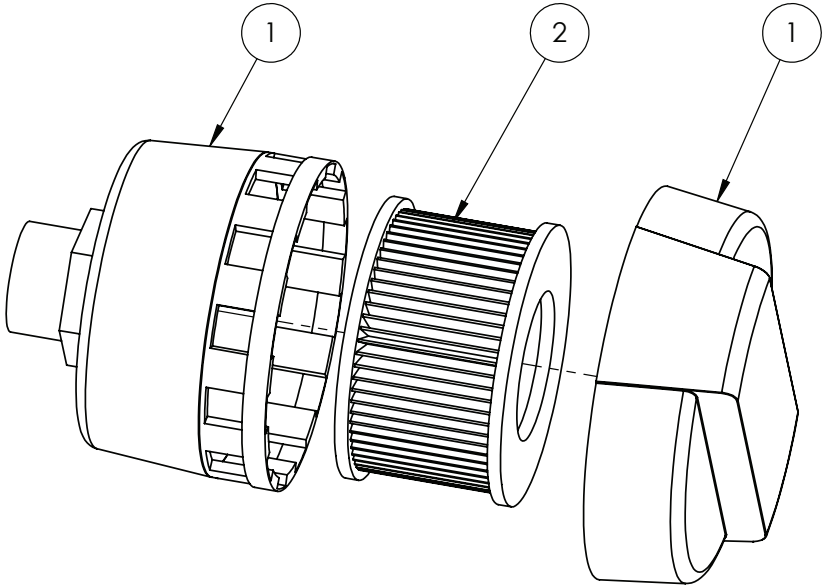

ITEM 1 COMES COMPLETE
WITH FILTER ELEMENT

IF DESCRIPTION PREFIX IS ASSEMBLY DRAWING ONLY OR PRODUCTION DRAWING ONLY THE ITEM IS NOT FOR SALE			
ITEM	PART NUMBER	DESCRIPTION	QTY
1	GA5005259	AIR FILTER, 1 BSP MALE THREAD	1
2	GA5049460	FILTER ELEMENT, SUIT GA5005259, HYDAC	1
GA5005259 GOLDACRES		AIR FILTER ASSEMBLY	REV

11 - Boom Centre

Boom Centre Build Options

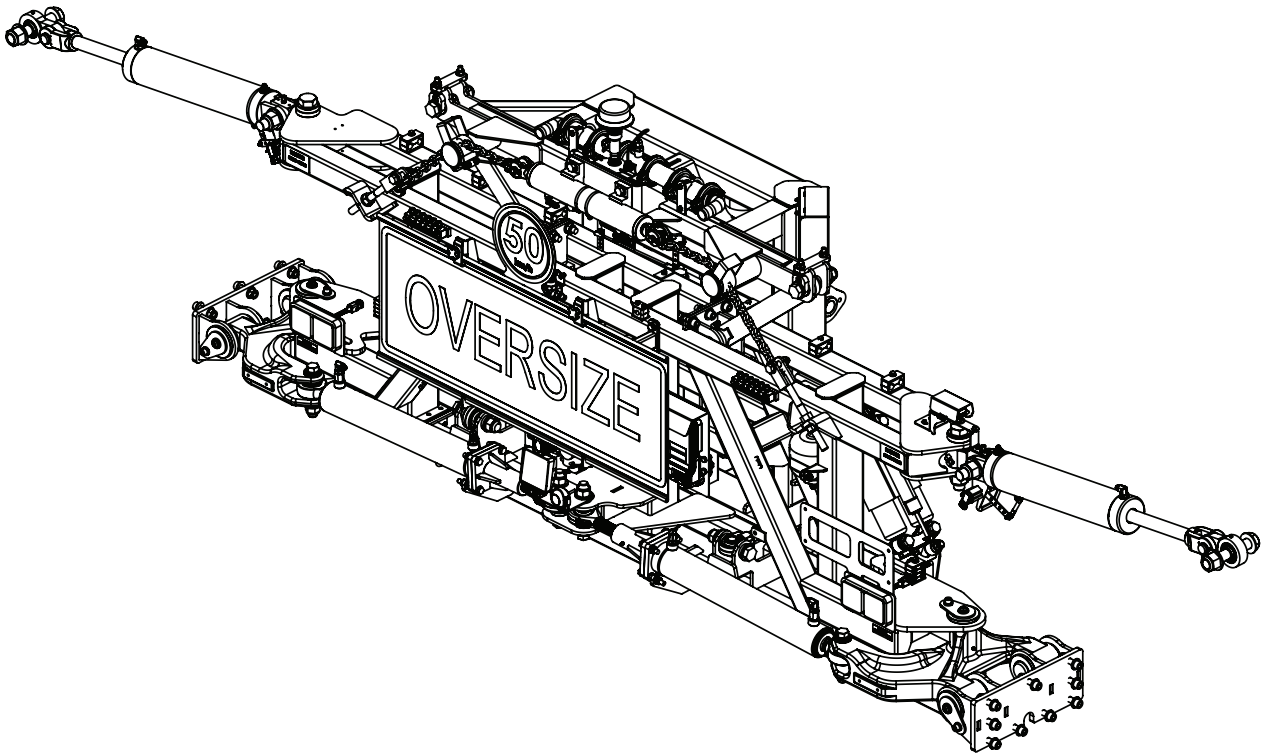

BUILD OPTIONS:
10210 - TRI-TECH RIVX SERIES BOOM - 24M
10220 - TRI-TECH RIVX SERIES BOOM - 28M
10230 - TRI-TECH RIVX SERIES BOOM - 30M
10250 - TRI-TECH RIVX SERIES BOOM - 36M
10041 - 3TS RAPID FIRE WITH RAPID FLOW 500mm SPACING (INLINE)
10061 - 3TS RAPID FIRE AND RAPID FLOW 250mm SPACING (STAGGERED)
10067 - 3TS RAPID FIRE WITH RAPID FLOW 250mm SPACING (STAGGERED) WITH TRIJETS ON TIER 1
10069 - 3TS RAPID FIRE WITH RAPID FLOW 250mm SPACING (STAGGERED) WITH TRIJETS ON TIERS 1 & 2
26020 - BOOM PLUMBED IN 10 SECTION USING CENTRAL SOLENOID VALVE BANK
30074 - XRT AUTO HEIGHT CONTROLLER WITH 5 SENSORS
65500 - G-HUB 12" INTERNAL SCREEN AND REAR VIEW CAMERA KIT

GA6101110 GOLDACRES	CENTRE AND PARALIFT REAR ASSEMBLY, 36M BOOM, PRAIRIE PRO, MY22	REV 14

Paralift Arms, 5000L & 6500L

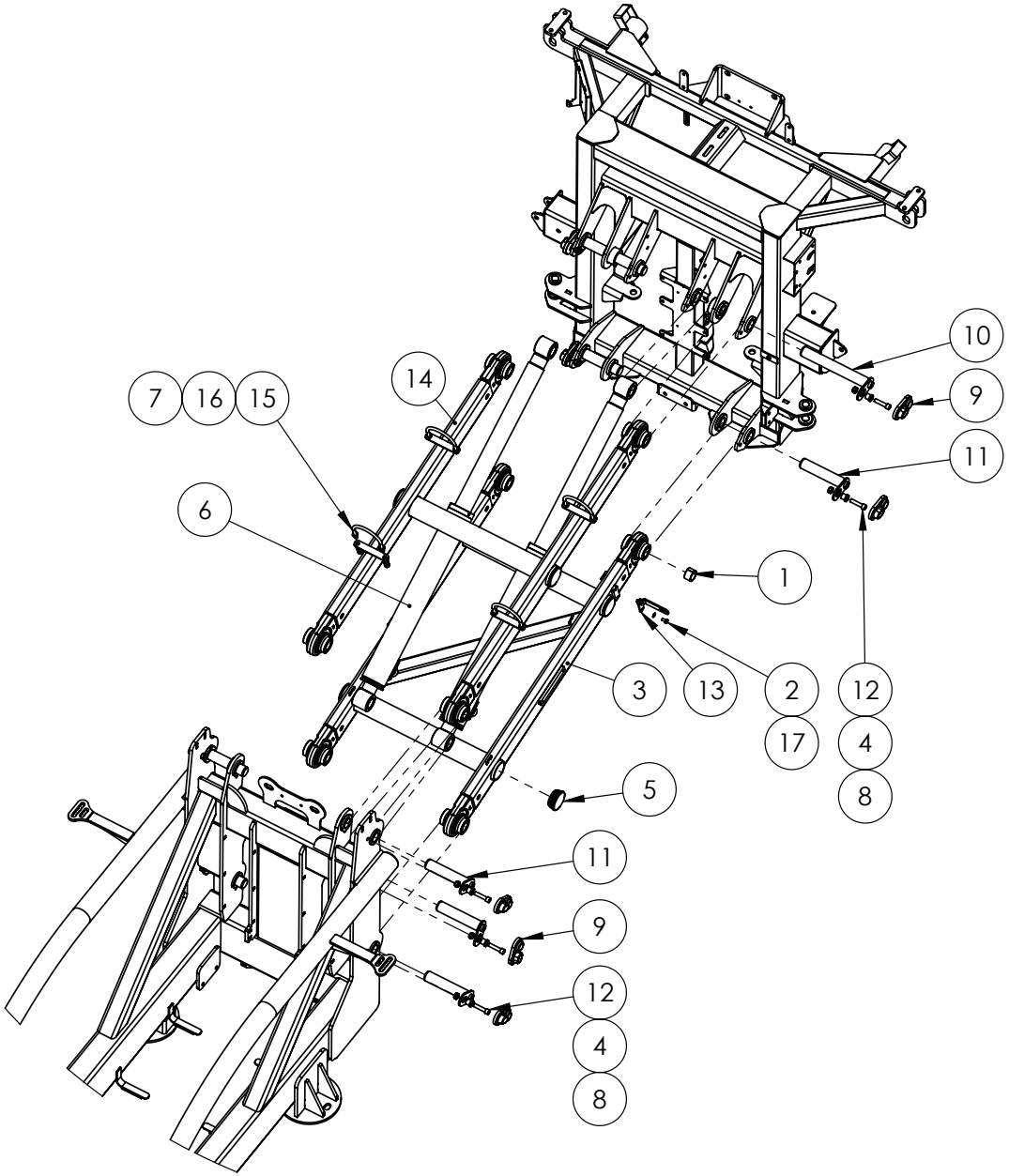

NOTE: ONLY FIT ITEMS 13 2 17 IF PRAIRIE PRO

IF DESCRIPTION PREFIX IS ASSEMBLY DRAWING ONLY OR PRODUCTION DRAWING ONLY THE ITEM IS NOT FOR SALE			
ITEM	PART NUMBER	DESCRIPTION	QTY
1	GA1700027	BEARING, GLACIER BUSH, 1 1/2" ID X 1" LONG	16
2	GA5011465	BOLT M8 X 16 GR8.8 ZP	2
3	GA4659311	BOTTOM PARALIFT ARM MY19	1
4	MACH0152	BUSH WITH SHOULDER, 12.3 ID X 25 OD X 21 LONG, SUIT PARALIFT PIN BOLTS	10
5	GA5050355	INSERT TO SUIT 65NB TUBE	6
6	GA4951285	LIFT HYDRAULIC CYLINDER ASSEMBLY, PRAIRIE PRO, SERIES 2, SUIT 5000L & 6500L	2
7	GA5000141	NUT M10 NYLOC ZP	8
8	GA5012461	NUT M12 NYLOC ZP	10
9	GA5067885	PIN COVER - PLASTIC	10
10	GA5073465	PIN, 1 1/2", SUIT PARALIFT ARM AND CYLINDER, CHROME PLATED	2
11	GA5073460	PIN, 1 1/2", SUIT PARALIFT ARM, CHROME PLATED	8
12	GA5051470	SHCS M12 X 50 GR12.9 ZP	10
13	GA4537185	SENSOR BRACKET STAND OFF, BOLT ON, SUIT PARALIFT HEIGHT, BOOM FOLD	1
14	GA4659306	TOP PARALIFT ARM MY19	1
15	GA5070905	U BOLT SUIT PARALIFT ARM HYDRAULIC HOSE	4
16	GA5000117	WASHER 10mm FLAT SS HD	8
17	GA5003643	WASHER 8mm FLAT SS HD	2
GA7800098 GOLDACRES	ASSEMBLY DRAWING ONLY. 4000, 5000, 6500 PARALIFT ARMS		REV 00.B

Cylinder, Hydraulic, Lift, 5000L - 6500L

REPLACEMENT PARTS			
ITEM	PART NUMBER	DESCRIPTION	QTY
A	GA3501583	SEAL KIT, HYDRAULIC CYLINDER, GA3500682 & GA3500593, "BICELLI GECO" BRAND ONLY, 8063SPL.SK	-

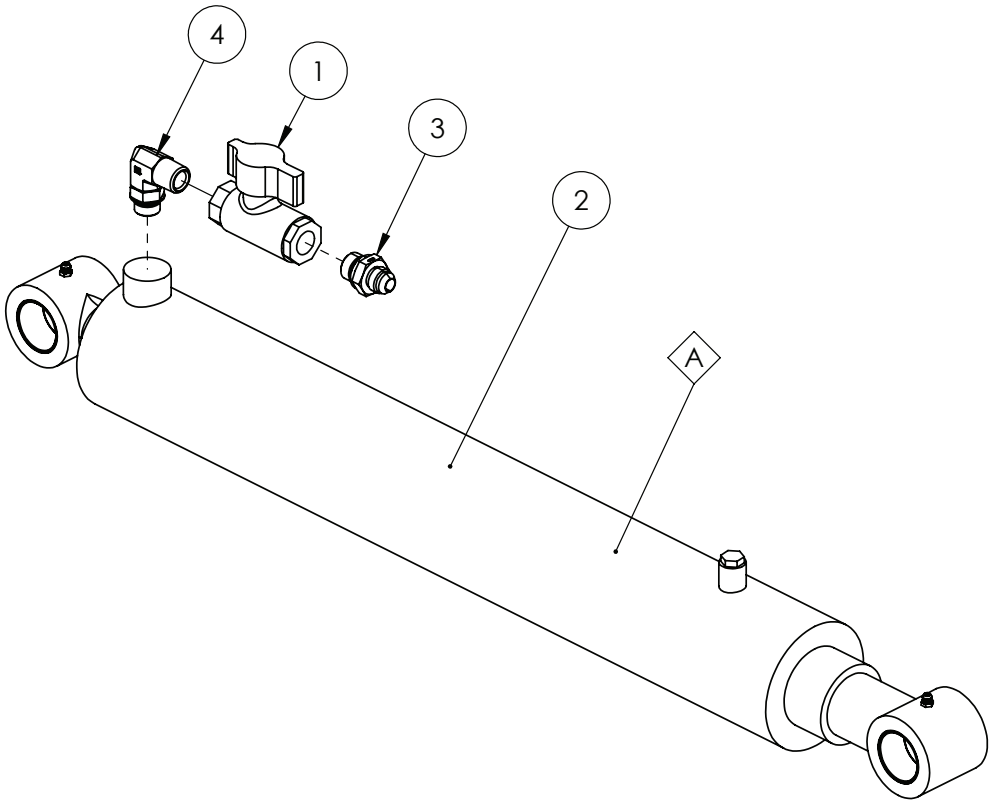

IF DESCRIPTION PREFIX IS ASSEMBLY DRAWING ONLY OR PRODUCTION DRAWING ONLY THE ITEM IS NOT FOR SALE			
ITEM	PART NUMBER	DESCRIPTION	QTY
1	GA5000835	BALL VALVE HYDRAULIC 1/2" FF	1
2	GA3500682	HYDRAULIC CYLINDER, DISPLACEMENT, 3" BORE, 2.5" ROD 21" STROKE, 1 1/2" PIN EYES	1
3	GA3500303	HYDRAULIC ADAPTER, NIPPLE, 1/2" BSPP O-RING MALE X 3/4" JIC MALE, S74-0812	1
4	GA3500349	HYDRAULIC ADAPTOR, ELBOW, 90 DEGREE, 1/2" BSPT MALE X 3/4" UN MALE O-RING	1
GA4951285 GOLDACRES		LIFT HYDRAULIC CYLINDER ASSEMBLY, PRAIRIE PRO, SERIES 2, SUIT 5000L & 6500L	REV 00

Paralift Arms, 8500L - 10,000L

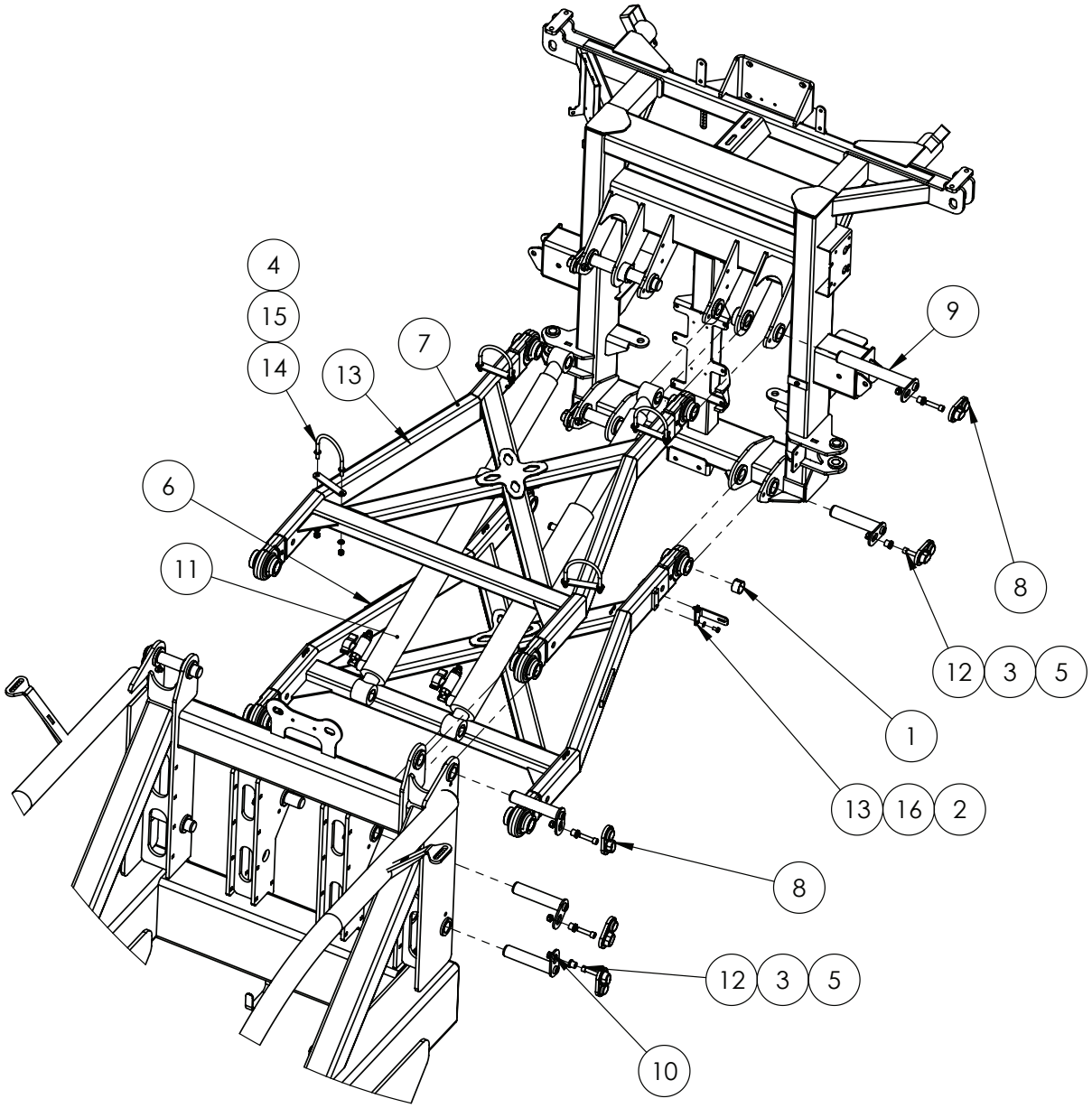

NOTE: ONLY FIT ITEMS 13 16 2 IF PRAIRIE PRO

IF DESCRIPTION PREFIX IS ASSEMBLY DRAWING ONLY OR PRODUCTION DRAWING ONLY THE ITEM IS NOT FOR SALE			
ITEM	PART NUMBER	DESCRIPTION	QTY
1	GA1700027	BEARING, GLACIER BUSH, 1 1/2" ID X I" LONG	16
2	GA5011465	BOLT M8 X 16 GR8.8 ZP	2
3	MACH0152	BUSH WITH SHOULDER, 12.3 ID X 25 OD X 21 LONG, SUIT PARALIFT PIN BOLTS	10
4	GA5000141	NUT M10 NYLOC ZP	8
5	GA5012461	NUT M12 NYLOC ZP	10
6	GA4603305	PARALIFT ARM, BOTTOM, PRAIRIE PRO, 8500/10000L, S2	1
7	GA4661320	PARALIFT ARM, PRAIRIE PRO, 8500L, 2019	1
8	GA5067885	PIN COVER - PLASTIC	10
9	GA5073465	PIN, 1 1/2", SUIT PARALIFT ARM AND CYLINDER, CHROME PLATED	2
10	GA5073460	PIN, 1 1/2", SUIT PARALIFT ARM, CHROME PLATED	8
11	GA4950580	PRODUCTION DRAWING ONLY, LIFT HYDRAULIC CYLINDER ASSEMBLY, G6 MY20	2
12	GA5051470	SHCS M12 X 50 GR12.9 ZP	10
13	GA4537185	SENSOR BRACKET STAND OFF, BOLT ON, SUIT PARALIFT HEIGHT, BOOM FOLD	1
14	GA5070905	U BOLT SUIT PARALIFT ARM HYDRAULIC HOSE	4
15	GA5000117	WASHER 10mm FLAT SS HD	8
16	GA5003643	WASHER 8mm FLAT SS HD	2
GA7800099 GOLDACRES	ASSEMBLY DRAWING ONLY. 8500, 10000 PARALIFT ARMS		REV 00.B

Cylinder, Hydraulic, Lift, 8500L - 10,000L

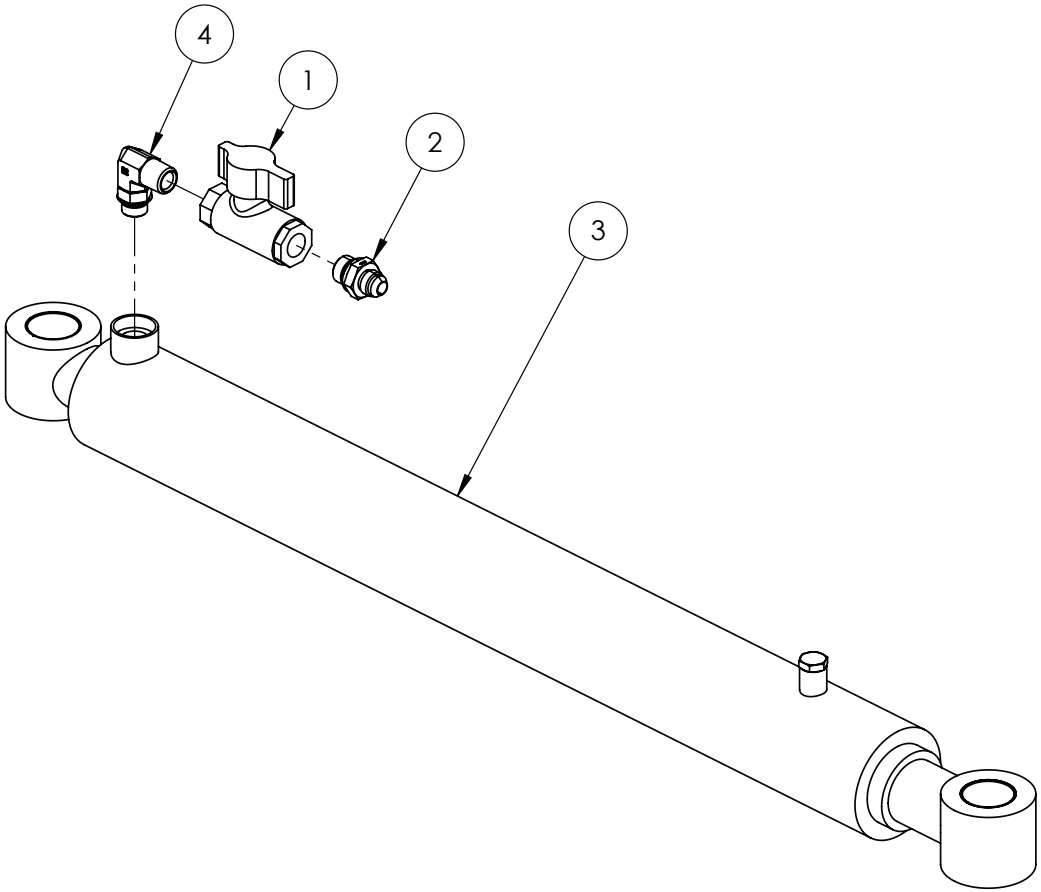

IF DESCRIPTION PREFIX IS ASSEMBLY DRAWING ONLY OR PRODUCTION DRAWING ONLY THE ITEM IS NOT FOR SALE			
ITEM	PART NUMBER	DESCRIPTION	QTY
1	GA5000835	BALL VALVE HYDRAULIC 1/2" FF	1
2	GA3500303	HYDRAULIC ADAPTOR NIPPLE, 1/2" BSPP TO 3/4" JIC	1
3	GA3500593	HYDRAULIC CYLINDER, DISPLACEMENT, 3" BORE, 2.5" ROD, 26" STROKE SUIT 1.5" PINS	1
4	GA3500349	HYDRAULIC ADAPTOR, ELBOW, 90 DEGREE, 1/2" BSPT MALE X 3/4" UN MALE O-RING	1
GA4950580 GOLDACRES		PRODUCTION DRAWING ONLY, LIFT HYDRAULIC CYLINDER	REV 00

Paralift, 24-36mt

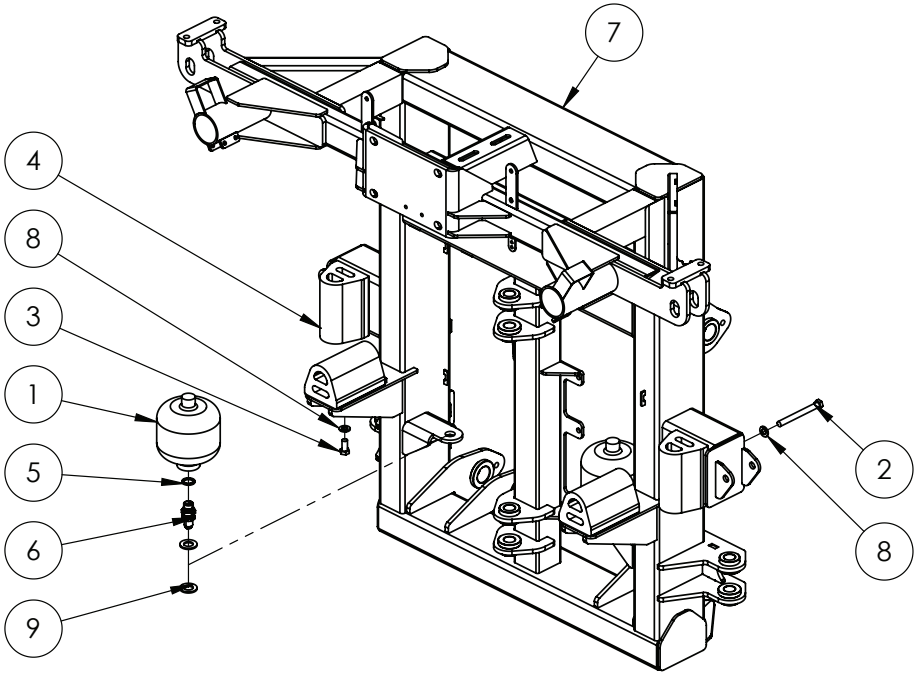

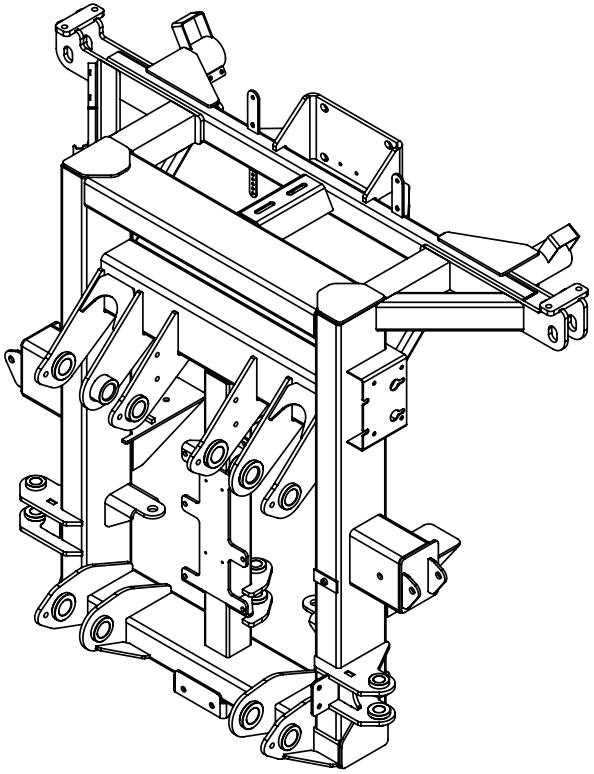

IF DESCRIPTION PREFIX IS ASSEMBLY DRAWING ONLY OR PRODUCTION DRAWING ONLY THE ITEM IS NOT FOR SALE			
ITEM	PART NUMBER	DESCRIPTION	QTY
1	GA5007787	ACCUMULATOR 1.0L PRECHARGE 70 BAR	2
2	GA5000265	BOLT M12 X 120 GR8.8 ZP	2
3	GA5011229	BOLT M12 X 25 GR8.8 ZP	2
4	GA5075240	BUMP STOP RUBBER WITH THREADED INSERT	4
5	GA3500159	HYDRAULIC SEAL, BONDED, 1/2", RL21D-08	2
6	GA3500717	HYDRAULIC ADAPTOR, BULKHEAD NIPPLE, 1/2" BSPP MALE X 3/4" JIC MALE, S130P-0812	2
7	GA4602460	PARALIFT REAR, TRITECH, MY20	1
8	GA5000577	WASHER 12mm FLAT SS HD	4
9	GA5001741	WASHER 20mm FLAT SS HD	4
GA6101110-01 GOLDACRES		CENTRE AND PARALIFT REAR ASSEMBLY, 36M BOOM, PRAIRIE PRO, MY22	REV 01.B

Paralift, 48mt

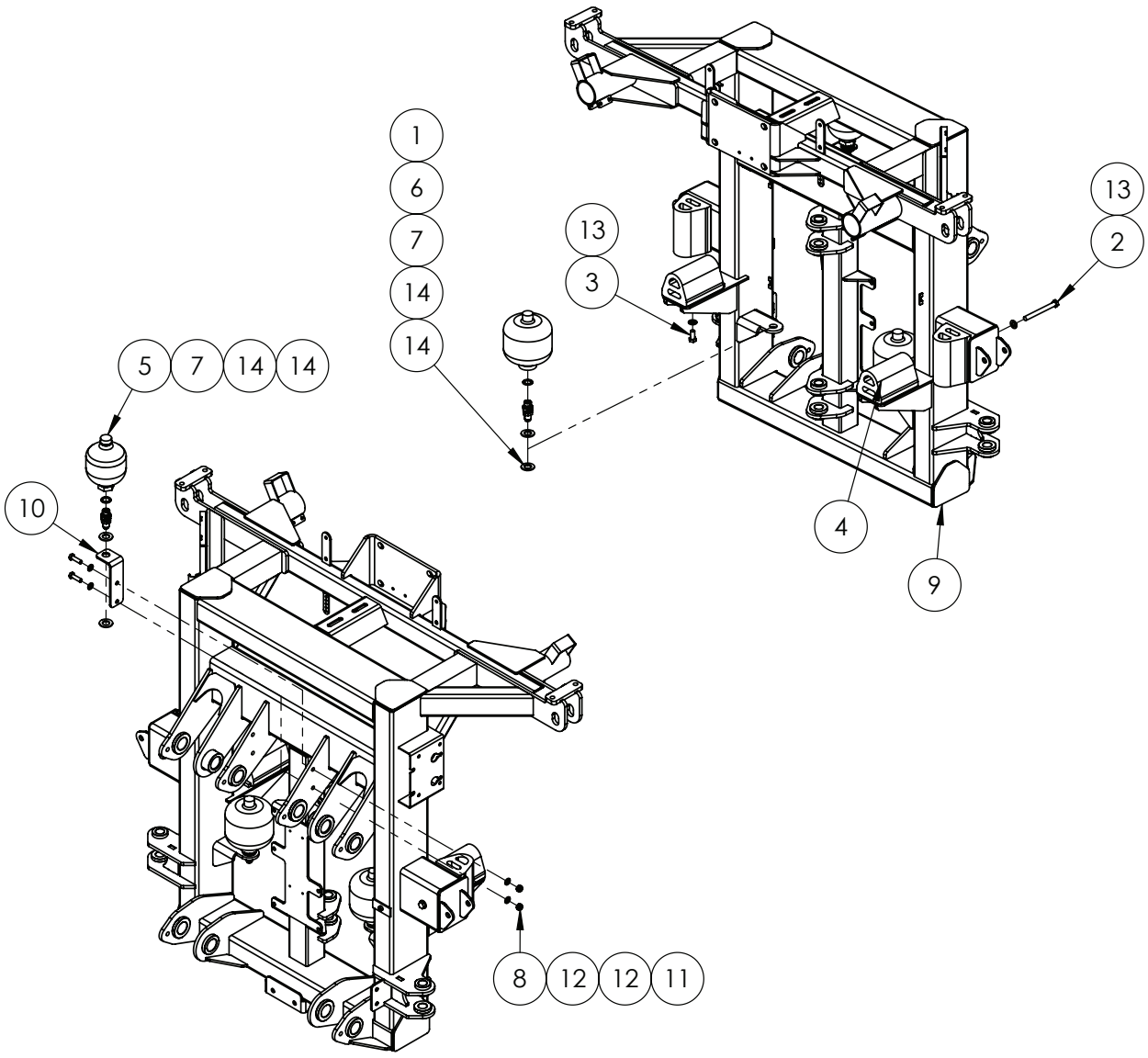

48MT PARALIFT REAR

IF DESCRIPTION PREFIX IS ASSEMBLY DRAWING ONLY OR PRODUCTION DRAWING ONLY THE ITEM IS NOT FOR SALE			
ITEM	PART NUMBER	DESCRIPTION	QTY
1	GA5007787	ACCUMULATOR 1.0L PRECHARGE 70 BAR	2
2	GA5000265	BOLT M12 X 120 GR8.8 ZP	2
3	GA5011229	BOLT M12 X 25 GR8.8 ZP	2
4	GA5075240	BUMP STOP RUBBER WITH THREADED INSERT	4
5	GA3501087	HYDRAULIC ACCUMULATOR, 0.6L, 90 BAR PRECHARGE, HYDAC	1
6	GA3500159	HYDRAULIC SEAL, BONDED, 1/2", RL21D-08	3
7	GA3500717	HYDRAULIC ADAPTOR, BULKHEAD NIPPLE, 1/2" BSPP MALE X 3/4" JIC MALE, S130P-0812	3
8	GA5000141	NUT M10 NYLOC ZP	2
9	GA4602460	PARALIFT REAR, TRITECH, MY20	1
10	GA4411685	PLATE, ACCUMULATOR MOUNT, 48M BOOM	1
11	GA5006111	SET SCREW M10 X 35 GR8.8 ZP	2
12	GA5000117	WASHER 10mm FLAT SS HD	4
13	GA5000577	WASHER 12mm FLAT SS HD	4
14	GA5001741	WASHER 20mm FLAT SS HD	6
GA6100830-01 GOLDACRES	CENTRE AND PARALIFT REAR ASSEMBLY, 48M BOOM, CONFIGURABLE, G6, MY20		REV 02.B

Long Delta Links, Mounting

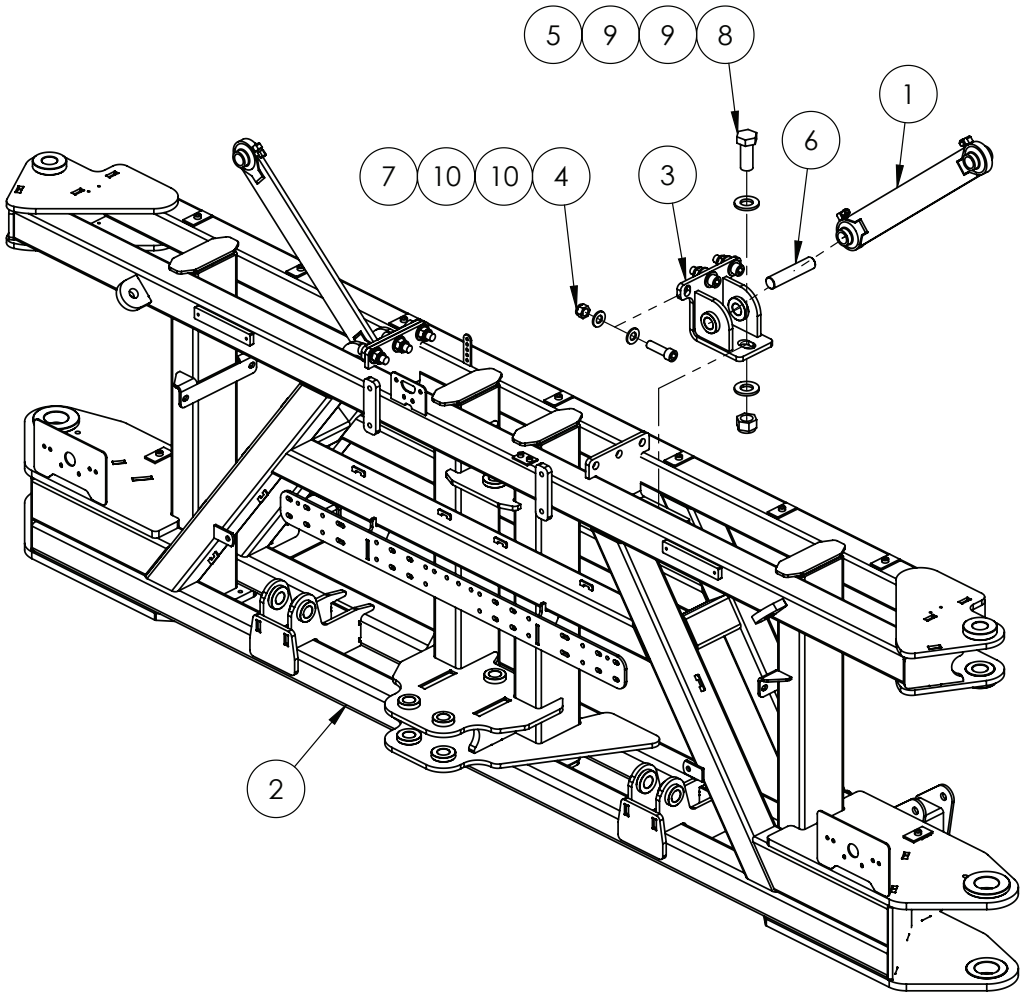

IF DESCRIPTION PREFIX IS ASSEMBLY DRAWING ONLY OR PRODUCTION DRAWING ONLY THE ITEM IS NOT FOR SALE			
ITEM	PART NUMBER	DESCRIPTION	QTY
1	GA4951545	ASSEMBLY DRAWING ONLY, DELTA LINK, LONG, PRAIRIE PRO, MY22	2
2	GA4600601	CENTRE SECTION, 36m - 48m BOOM, MY20	1
3	GA4600605	DELTA LINK MOUNT, CENTRE SECTION, 48m BOOM	2
4	GA5001029	NUT M16 NYLOC ZP	6
5	GA5012446	NUT, 1", UNF, 12 TPI, NYLOC ZP	2
6	GA4550495	PIN, DELTA LINK CENTRE SECTION MOUNT, 1" OD X 120mm LONG	2
7	GA5003687	SHCS M16 X 55 GR12.9 ZP	6
8	GA0500027	SET SCREW, 1" X 2 1/2" UNF 12 TPI, ZP	2
9	GA5017659	WASHER 1 FLAT ZP HD (5mm THICK)	4
10	GA5001043	WASHER 16mm FLAT SS HD	12
GA6101110-02 GOLDACRES		CENTRE AND PARALIFT REAR ASSEMBLY, 36M BOOM, PRAIRIE PRO, MY22	REV 01

Delta Link, Long

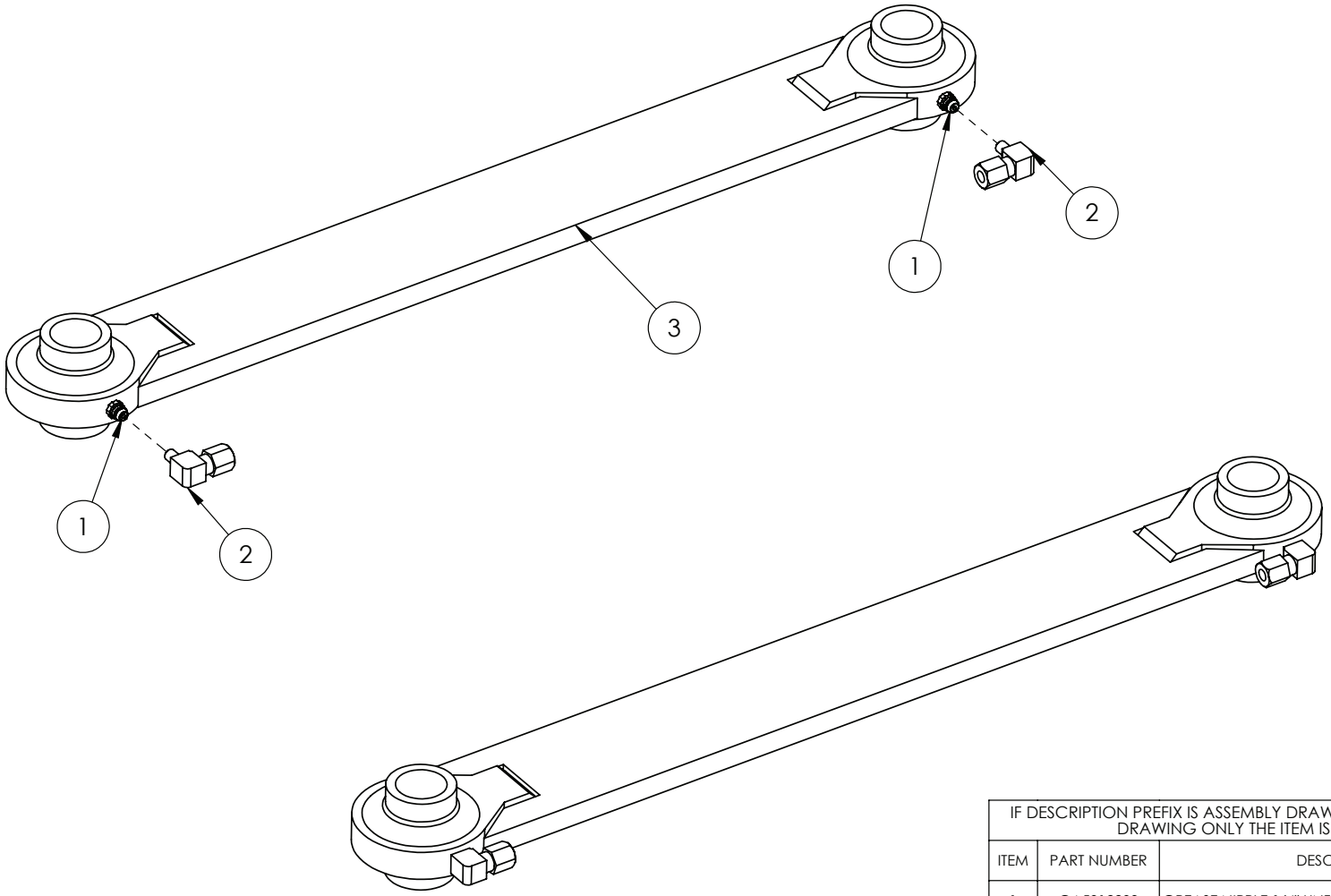

IF DESCRIPTION PREFIX IS ASSEMBLY DRAWING ONLY OR PRODUCTION DRAWING ONLY THE ITEM IS NOT FOR SALE			
ITEM	PART NUMBER	DESCRIPTION	QTY
1	GA5012203	GREASE NIPPLE 1/4" UNF SHORT	2
2	GA5069995	GREASE FITTING LINE CONNECTOR ELBOW 6mm	2
3	GA4656240	LONG DELTA LINK	1
GA4951545 GOLDACRES		ASSEMBLY DRAWING ONLY, DELTA LINK, LONG, PRAIRIE PRO, MY22	REV 01

Short Delta Links, Mounting

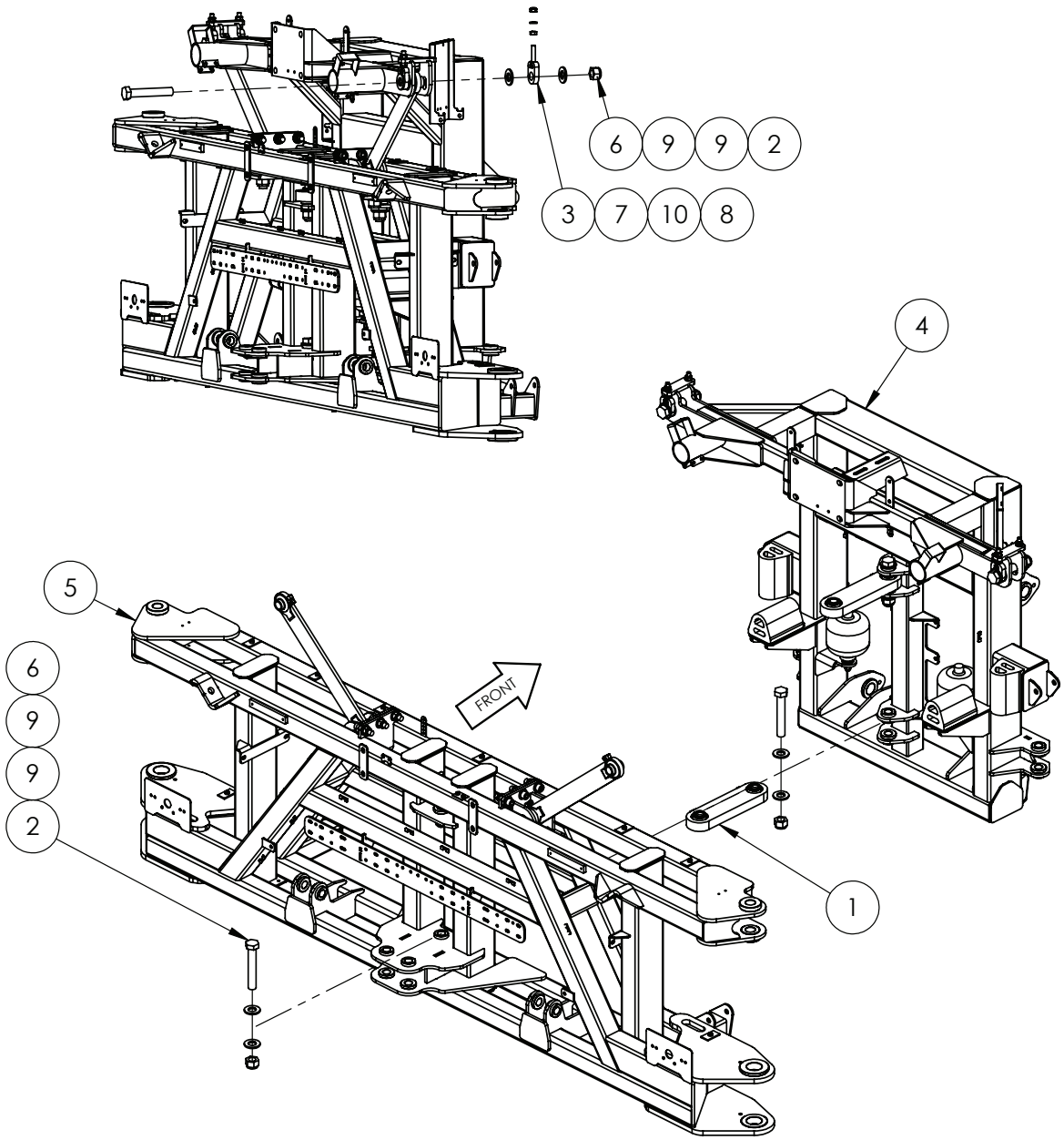

IF DESCRIPTION PREFIX IS ASSEMBLY DRAWING ONLY OR PRODUCTION DRAWING ONLY THE ITEM IS NOT FOR SALE			
ITEM	PART NUMBER	DESCRIPTION	QTY
1	GA4951550	ASSEMBLY DRAWING ONLY, DELTA LINK, SHORT, PRAIRIE PRO, MY22	2
2	GA4683145	BOLT 1 UNC X 6 CUT DOWN FROM 7	6
3	GA4656260	BOOM DELTA HANGER ADJUSTER BOLT	4
4	GA6101110-01	CENTRE AND PARALIFT REAR ASSEMBLY, 36M BOOM, PRAIRIE PRO, MY22	1
5	GA6101110-02	CENTRE AND PARALIFT REAR ASSEMBLY, 36M BOOM, PRAIRIE PRO, MY22	1
6	GA5012439	NUT 1" NYLOC UNC ZP	6
7	GA5000559	NUT M12 HEX ZP	4
8	GA5012461	NUT M12 NYLOC ZP	4
9	GA5017659	WASHER 1 FLAT ZP HD (5mm THICK)	16
10	GA5000577	WASHER 12mm FLAT SS HD	4
GA6101110-03 GOLDACRES		CENTRE AND PARALIFT REAR ASSEMBLY, 36M BOOM, PRAIRIE PRO, MY22	REV 00

Delta Link, Short

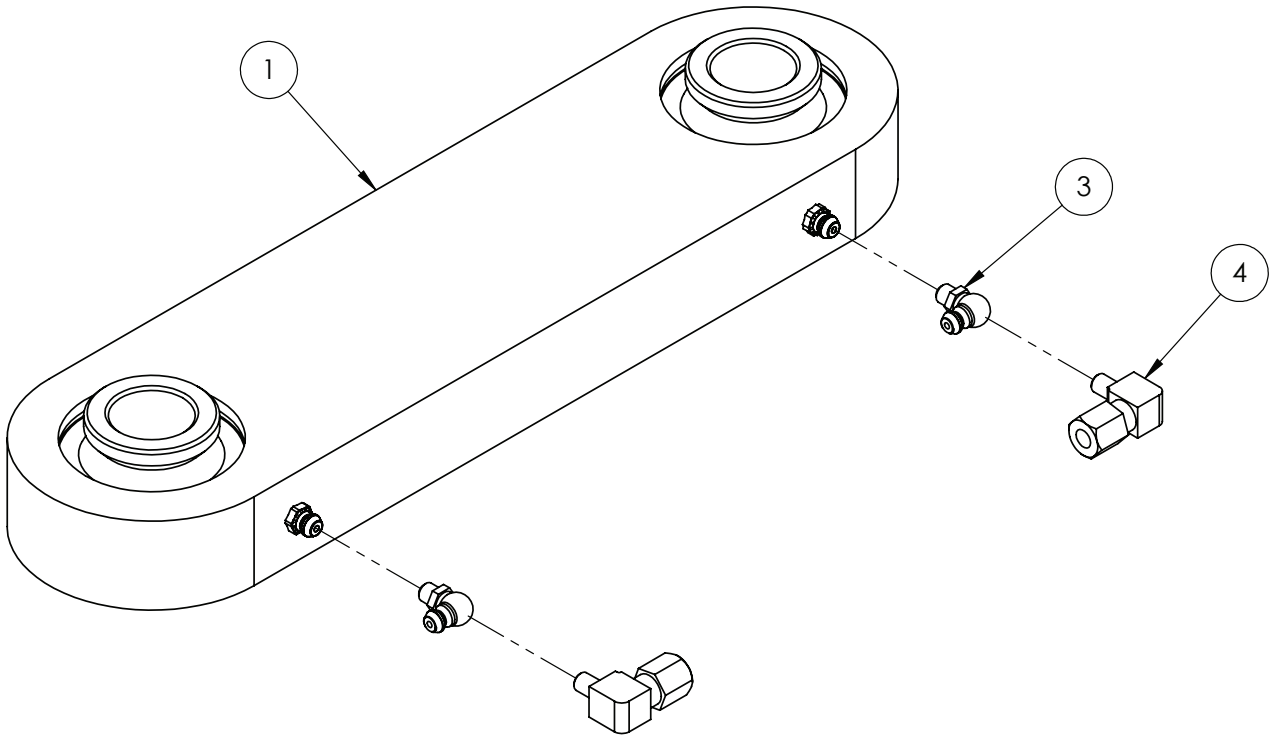

IF DESCRIPTION PREFIX IS ASSEMBLY DRAWING ONLY OR PRODUCTION DRAWING ONLY THE ITEM IS NOT FOR SALE			
ITEM	PART NUMBER	DESCRIPTION	QTY
1	GA5067855	DELTA LINK, SHORT, HEAVY DUTY	1
2	GA5012203	GREASE NIPPLE 1/4" UNF SHORT	2
3	GA5051970	GREASE NIPPLE, 6mm, 90 DEG	2
4	GA5069995	GREASE FITTING LINE CONNECTOR ELBOW 6mm	2
GA4951550 GOLDACRES		ASSEMBLY DRAWING ONLY, DELTA LINK, SHORT, PRAIRIE PRO, MY22	REV 02

Hydraulic Yaw Mounting, 36mt

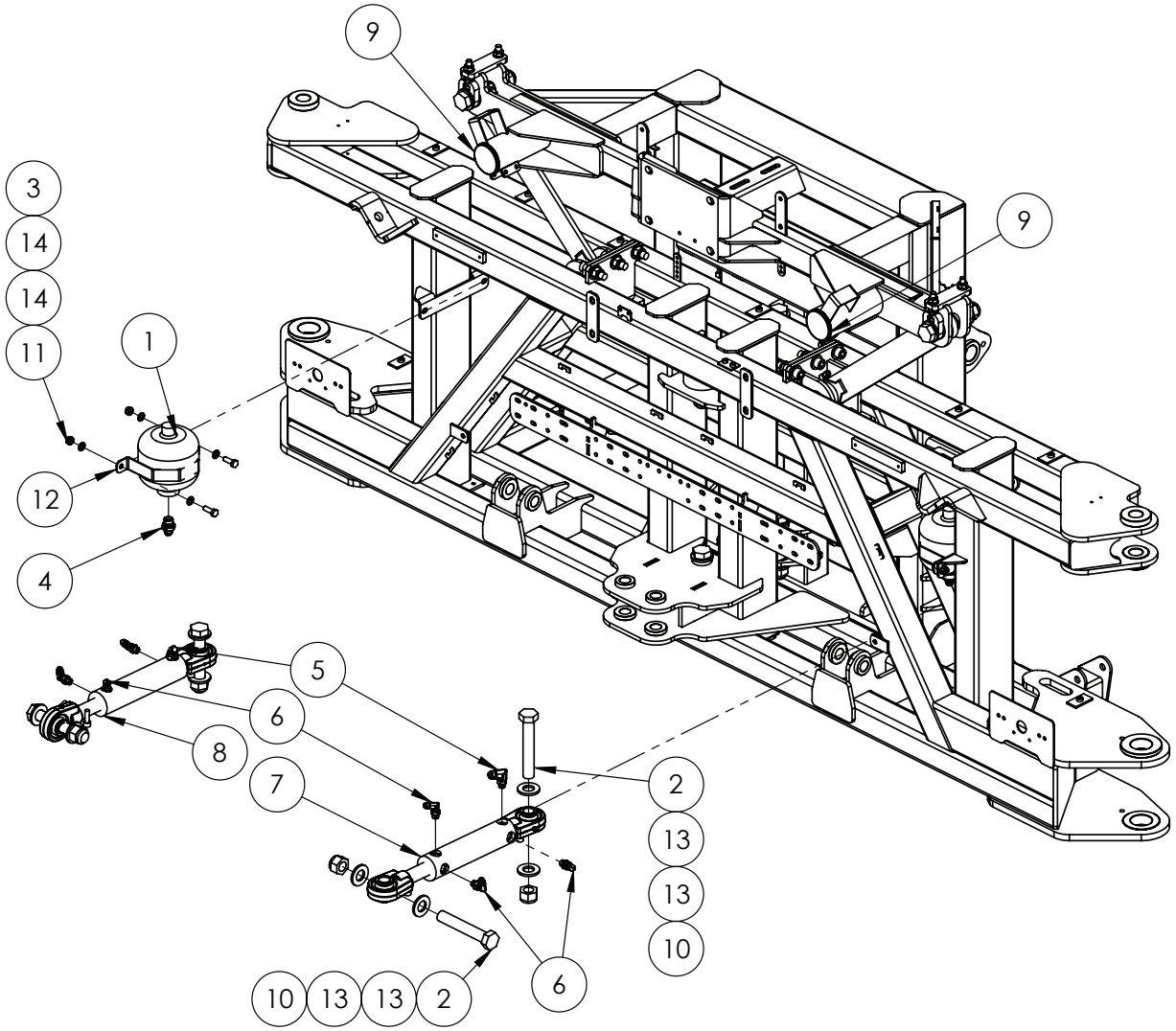

IF DESCRIPTION PREFIX IS ASSEMBLY DRAWING ONLY OR PRODUCTION DRAWING ONLY THE ITEM IS NOT FOR SALE			
ITEM	PART NUMBER	DESCRIPTION	QTY
1	GA5007787	ACCUMULATOR 1.0L PRECHARGE 70 BAR	2
2	GA4683145	BOLT 1 UNC X 6 CUT DOWN FROM 7	4
3	GA5065455	BOLT M10 X 30 GR8.8 ZP	4
4	GA3500303	HYDRAULIC ADAPTER, NIPPLE, 1/2" BSPP O-RING MALE X 3/4" JIC MALE, S74-0812	2
5	GA3500802	HYDRAULIC ADAPTOR, ELBOW, 90 DEGREE, 3/4" JIC MALE X 9/16" UN MALE O-RING, S91-1209	2
6	GA3500716	HYDRAULIC ADAPTOR, ELBOW, 90 DEGREE, 9/16" JIC MALE X 9/16" UN MALE O-RING, S91-0909	6
7	GA5060817	HYDRAULIC YAW CYLINDER WITH BALL ENDS	1
8	GA5060817	HYDRAULIC YAW CYLINDER WITH BALL ENDS	1
9	GA5050355	INSERT TO SUIT 65NB TUBE	2
10	GA5012439	NUT 1" NYLOC UNC ZP	4
11	GA5000141	NUT M10 NYLOC ZP	4
12	GA4406410	PLATE, 1L ACCUMULATOR MOUNT STRAP, CENTRE SECTION	2
13	GA5017659	WASHER 1 FLAT ZP HD (5mm THICK)	8
14	GA5000117	WASHER 10mm FLAT SS HD	8
GA6101110-04 GOLDACRES		CENTRE AND PARALIFT REAR ASSEMBLY, 36M BOOM, PRAIRIE PRO, MY22	REV 00

Roll Shockers

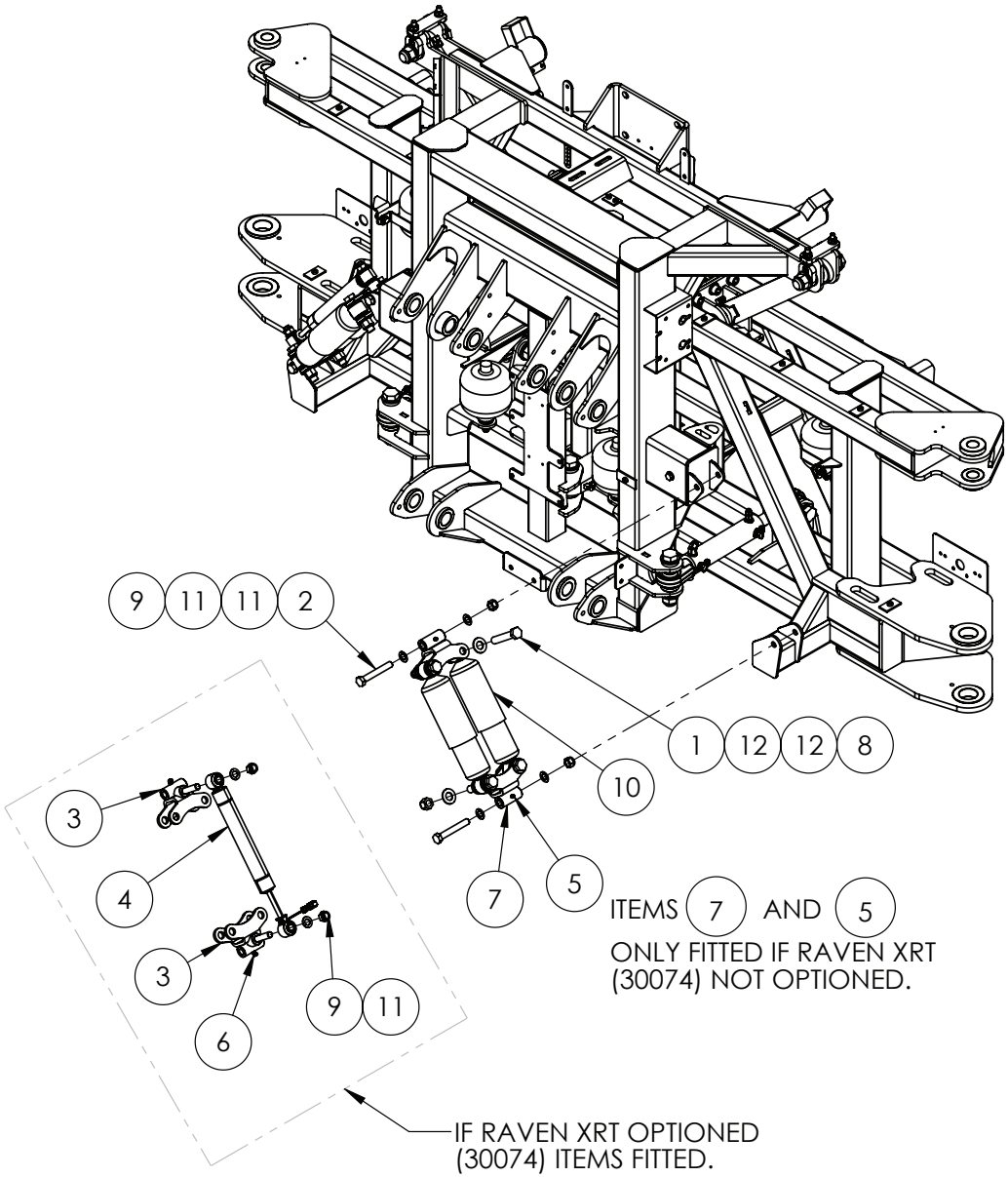

IF DESCRIPTION PREFIX IS ASSEMBLY DRAWING ONLY OR PRODUCTION DRAWING ONLY THE ITEM IS NOT FOR SALE			
ITEM	PART NUMBER	DESCRIPTION	QTY
1	GA5049490	BOLT 3/4" UNC X 4" HT ZP	8
2	GA5000855	BOLT M16 X 110 GR8.8 ZP	4
3	GA4602475	CENTRE ROLL SHOCKER MOUNT WITH RAVEN XRT VARIABLE DAMPER MOUNT	4
4	GA3000379	DAMPER, VARIABLE, RAVEN	2
5	GA5012203	GREASE NIPPLE, SHORT, 1/4 UNF, MACH0207	4
6	GA5009637	GREASE NIPPLE, ELBOW, 90 DEGREE, 1/4 UNF MALE, MACH0207	4
7	GA4659360	MOUNTING BRACKET, DUAL ROLL SHOCK ABSORBER, CENTRE	4
8	GA5048430	NUT 3/4 UNC NYLOC ZP	8
9	GA5001029	NUT M16 NYLOC ZP	8
10	GA5015139	SHOCK ABSORBER, DOUBLE EYE, 19mm EYE, 82mm OD, BLACK	4
11	GA5001055	WASHER 16mm FLAT SS	12
12	GA5001045	WASHER, 3/4" FLAT, HD ZP	16
GA6101110-05 GOLDACRES		CENTRE AND PARALIFT REAR ASSEMBLY, 36M BOOM, PRAIRIE PRO, MY22	REV 00

Boom Centre, Boom Mount Hinge Bracket

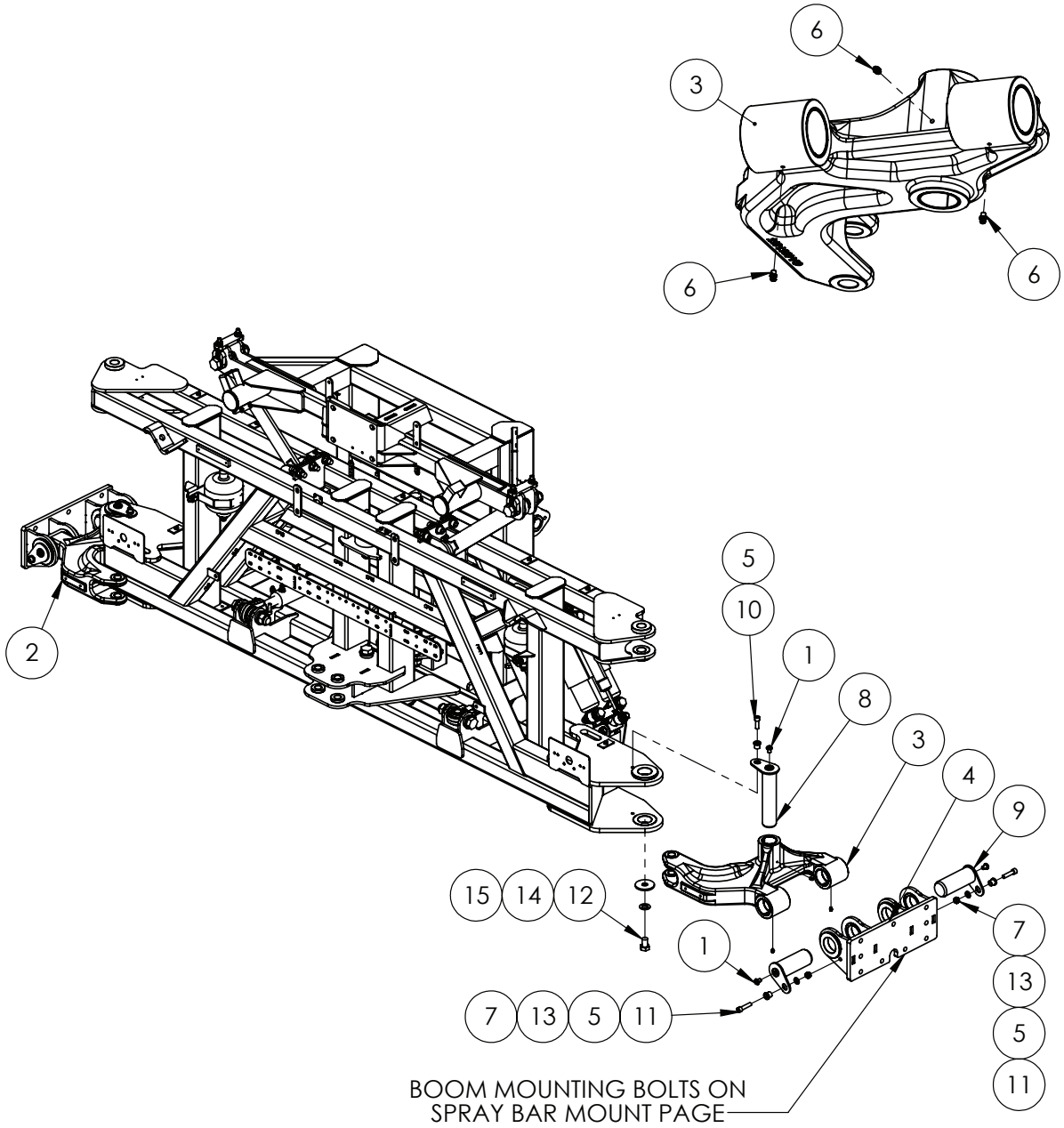

IF DESCRIPTION PREFIX IS ASSEMBLY DRAWING ONLY OR PRODUCTION DRAWING ONLY THE ITEM IS NOT FOR SALE			
ITEM	PART NUMBER	DESCRIPTION	QTY
1	GA5069890	BHCS M12 X 16 GR12.9 ZP	6
2	GA4909160	BOOM MOUNT HINGE ASSEMBLY, LH	1
3	GA4909155	BOOM MOUNT HINGE ASSEMBLY, RH	1
4	GA4602100	BOOM MOUNT, INNER WING, TRITECH, MY20	2
5	MACH0152	BUSH WITH SHOULDER, 12.3 ID X 25 OD X 21 LONG, SUIT PARALIFT PIN BOLTS	6
6	GA5050450	GREASE NIPPLE, 6mm	6
7	GA5012461	NUT M12 NYLOC ZP	4
8	GA4600620	PIN, BOOM FOLD PIVOT, 50mm OD, FABRICATED,	2
9	GA4600625	PIN, BOOM TILT PIVOT, 60mm OD, FABRICATED, 48M	4
10	GA5000313	SHCS M12 X 35 GR12.9 ZP	2
11	GA5051470	SHCS M12 X 50 GR12.9 ZP	4
12	GA5011323	SET SCREW M20 X 30 GR8.8 ZP	2
13	GA5000577	WASHER 12mm FLAT SS HD	4
14	GA5001741	WASHER 20mm FLAT SS HD	2
15	L073A	WASHER SUIT DRAWBAR PIN	2
GA6101110-06 GOLDACRES		CENTRE AND PARALIFT REAR ASSEMBLY, 36M BOOM, PRAIRIE PRO, MY22	REV 00

LH Boom Mount Hinge

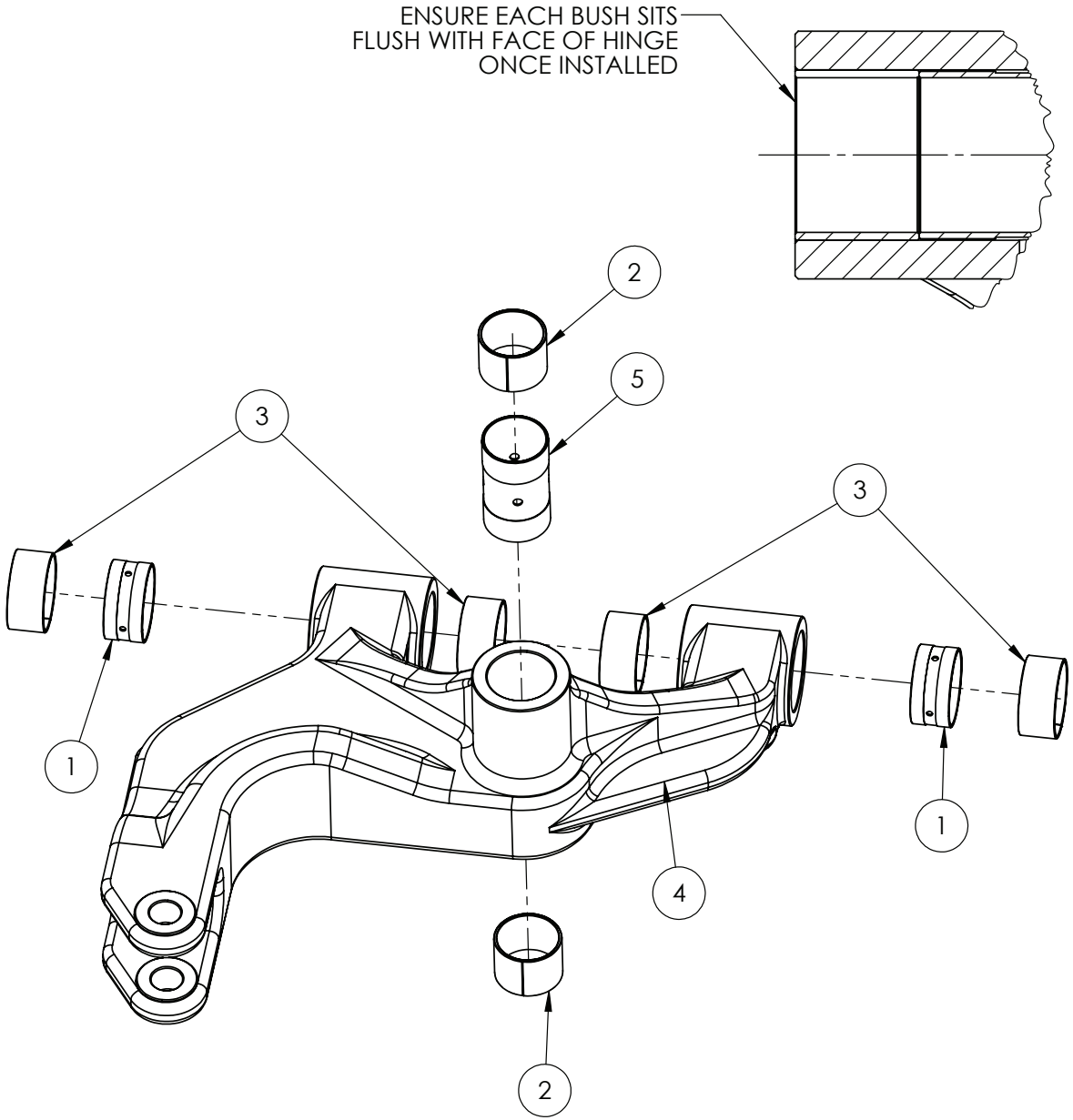

IF DESCRIPTION PREFIX IS ASSEMBLY DRAWING ONLY OR PRODUCTION DRAWING ONLY THE ITEM IS NOT FOR SALE			
ITEM	PART NUMBER	DESCRIPTION	QTY
1	GA4551460	BEARING, GLACIER BUSH SPACER, 60mm ID X 32mm LONG, 48M BOOM TILT PIVOT	2
2	GA1700012	BEARING, GLACIER BUSH, 50mm ID X 40mm LONG	2
3	GA1700011	BEARING, GLACIER BUSH, 60mm ID X 30mm LONG	4
4	GA4551450	BOOM MOUNT HINGE, LH, CAST. 48M BOOM	1
5	GA4551635	BUSH, BOOM MOUNT HINGE, FOLD AXIS, GLACIER BUSH SPACER	1
GA4909160 GOLDACRES		BOOM MOUNT HINGE ASSEMBLY, LH	REV 00

RH Boom Mount Hinge

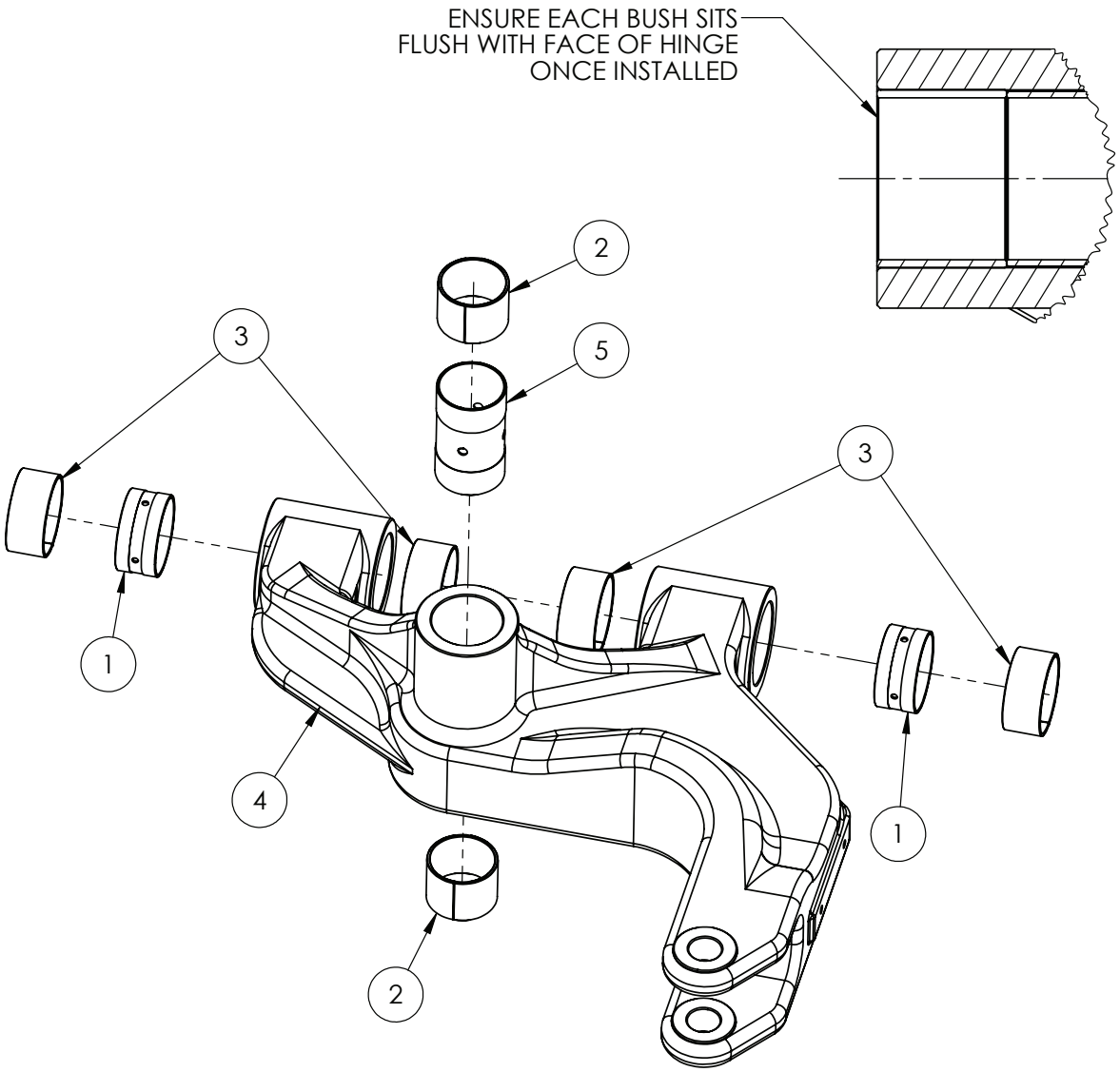

IF DESCRIPTION PREFIX IS ASSEMBLY DRAWING ONLY OR PRODUCTION DRAWING ONLY THE ITEM IS NOT FOR SALE			
ITEM	PART NUMBER	DESCRIPTION	QTY
1	GA4551460	BEARING, GLACIER BUSH SPACER, 60mm ID X 32mm LONG, 48M BOOM TILT PIVOT	2
2	GA1700012	BEARING, GLACIER BUSH, 50mm ID X 40mm LONG	2
3	GA1700011	BEARING, GLACIER BUSH, 60mm ID X 30mm LONG	4
4	GA4551455	BOOM MOUNT HINGE, RH,CAST, 48M BOOM	1
5	GA4551635	BUSH, BOOM MOUNT HINGE, FOLD AXIS, GLACIER BUSH SPACER	1
GA4909155 GOLDACRES		BOOM MOUNT HINGE ASSEMBLY, RH	REV 00

Hydraulic Tilt & Fold, RIVX, 24mt - 36mt

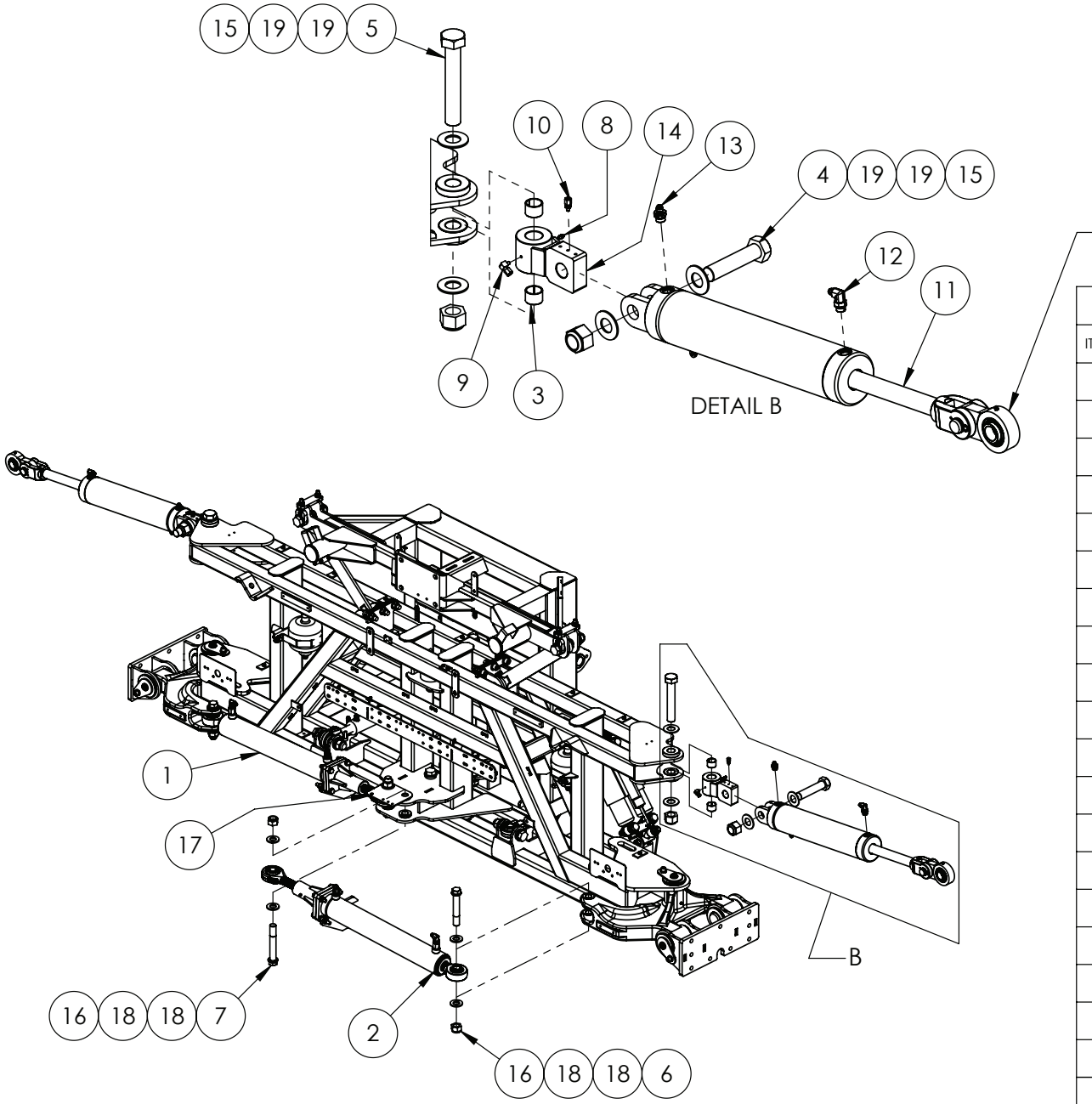

IF DESCRIPTION PREFIX IS ASSEMBLY DRAWING ONLY OR PRODUCTION DRAWING ONLY THE ITEM IS NOT FOR SALE			
ITEM	PART NUMBER	DESCRIPTION	QTY
1	GA3500667	ASSEMBLY DRAWING ONLY, HYDRAULIC CYLINDER, FOLD, 24 - 36M, G6, MY20	1
2	GA3500667	ASSEMBLY DRAWING ONLY, HYDRAULIC CYLINDER, FOLD, 24 - 36M, G6, MY20	1
3	GA5073725	BEARING, GLACIER BUSH, 1 1/2" ID X I" LONG	4
4	GA0500073	BOLT, 1 1/4" X 5 1/2" UNC, ZP, GR8	2
5	GA0500138	BOLT, 1 1/4" X 7 1/2" UNC, ZP, GR8	2
6	GA4553238	BOLT, 1" UNC X 6", EN26, ZP	2
7	GA4553243	BOLT, 1" UNC X 6 1/2", EN26, ZP	2
8	GA5050450	GREASE NIPPLE, 6mm	2
9	GA5069995	GREASE FITTING LINE CONNECTOR ELBOW 6mm	2
10	GA5069985	GREASE FITTING LINE CONNECTOR STRAIGHT 6mm	2
11	GA3500835	HYDRAULIC CYLINDER, BORE 4", ROD 1.5", STROKE 300mm	2
12	GA3500700	HYDRAULIC ADAPTOR, ELBOW, 90 DEGREE, 9/16" JIC MALE X 3/4" UN MALE O-RING, S91-0912	2
13	GA3500147	HYDRAULIC ADAPTOR, NIPPLE, 9/16" JIC MALE X 3/4" UN MALE O-RING, S90-0912	2
14	GA4602930	KNUCKLE, CENTRE SECTION, TILT CYLINDER, TRITECH, MY20	2
15	GA0500071	NUT 1 1/4", NYLOC, ZP, UNC	4
16	GA5012439	NUT 1" NYLOC UNC ZP	4
17	GA4406820	PLATE, REVERSE LIGHT AND CAMERA MOUNT	1
18	GA5017659	WASHER 1 FLAT ZP HD (5mm THICK)	8
19	GA0500072	WASHER, 1 1/4", FLAT, OD 66 X ID 33.3 X 5mm, ZP	8
GA6101110-07 GOLDACRES		CENTRE AND PARALIFT REAR ASSEMBLY, 36M BOOM, PRAIRIE PRO, MY22	REV 04

Hydraulic Cylinder Assembly, Fold, 24mt - 36mt

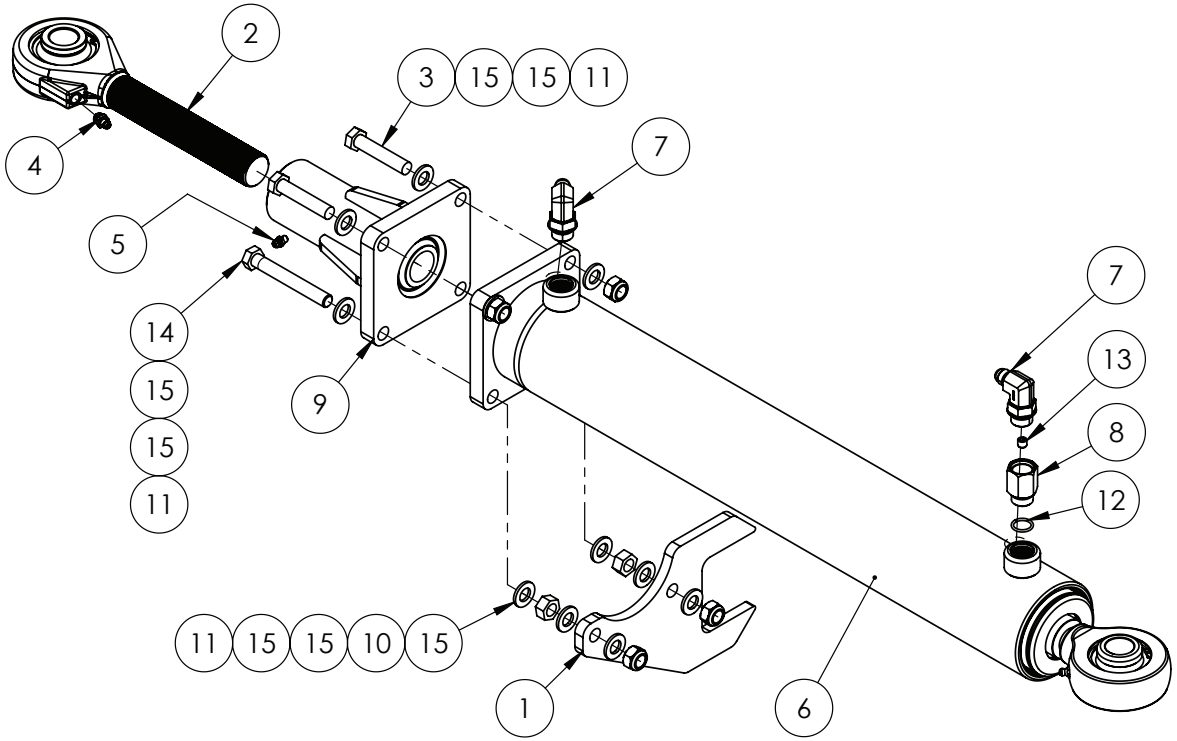

SEE HYDRAULICS FOR CYLINDER SUB-ASSEMBLY

IF DESCRIPTION PREFIX IS ASSEMBLY DRAWING ONLY OR PRODUCTION DRAWING ONLY THE ITEM IS NOT FOR SALE

ITEM	PART NUMBER	DESCRIPTION	QTY
1	GA5073235	ANTI ROTATION BRACKET, HYDRAULIC FOLD CYLINDER, 48m BOOM	1
2	GA5078654	BEARING END, ASSEMBLY, 1 1/4-12 UNF THREAD, C/W GEH 35 ES-2RS BEARING, BUSHED DIA. 25.5	1
3	GA5000335	BOLT M12 X 60 GR8.8 ZP	2
4	GA5069980	GREASE NIPPLE, 1/8 BSPP, STRAIGHT	1
5	GA5050450	GREASE NIPPLE, 6mm	1
6	GA3500655	HYDRAULIC CYLINDER, DOUBLE ACTING, 3.25" BORE, 1.5" ROD, FLANGE BASE MOUNT, 1" ROSE END	1
7	GA3500700	HYDRAULIC ADAPTOR, ELBOW, 90 DEGREE, 9/16" JIC MALE X 3/4" UN MALE O-RING, S91-0912	2
8	GA4551930	MACHINED HYDRAULIC FITTING, 3/4" UN O-RING MALE X 3/4" UN O-RING FEMALE, SUIT INTERNAL ORIFICE PLUG.	1
9	GA4601820	MOUNT, FOLD CYLINDER BASE, 24 - 36m TRITECH, MY19	1
10	GA5000559	NUT M12 HEX ZP	2
11	GA5012461	NUT M12 NYLOC ZP	4
12	GA5078123	O-RING UNO 3/4", ROD-UN12	1
13	GA3500851	PLUG, ORIFICE, 1/16 NPT X 1.0mm	1
14	GA0500081	SET SCREW M12 X 90 GR8.8, ZP	2
15	GA5000577	WASHER 12mm FLAT SS HD	12
GA3500667 GOLDACRES		ASSEMBLY DRAWING ONLY, HYDRAULIC CYLINDER, FOLD, G6, MY20	REV 03

RIGHT HAND CONFIGURATION SHOWN

Hydraulic Tilt & Fold, RIVX, 48mt

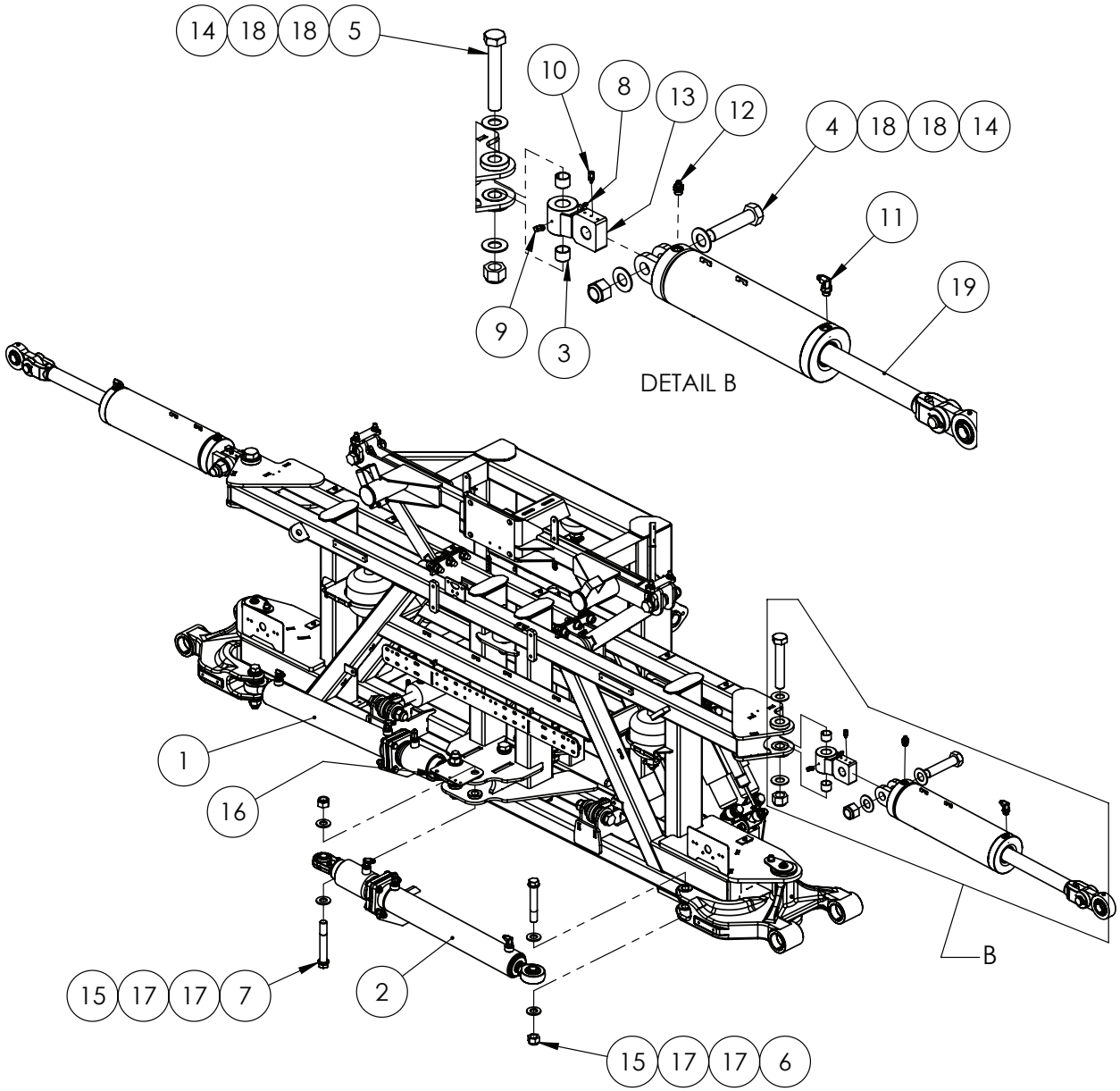

IF DESCRIPTION PREFIX IS ASSEMBLY DRAWING ONLY OR PRODUCTION DRAWING ONLY THE ITEM IS NOT FOR SALE			
ITEM	PART NUMBER	DESCRIPTION	QTY
1	GA3500840	ASSEMBLY DRAWING ONLY, HYDRAULIC CYLINDER, LH FOLD, 48M, G6, MY20 LEFT	1
2	GA3500840	ASSEMBLY DRAWING ONLY, HYDRAULIC CYLINDER, RH FOLD, 48M, G6, MY20 RIGHT	1
3	GA5073725	BEARING, GLACIER BUSH, 1 1/2" ID X I" LONG	4
4	GA0500073	BOLT, 1 1/4" X 5 1/2" UNC, ZP, GR8	2
5	GA0500138	BOLT, 1 1/4" X 7 1/2" UNC, ZP, GR8	2
6	GA4553238	BOLT, 1" UNC X 6", EN26, ZP	2
7	GA4553243	BOLT, 1" UNC X 6 1/2", EN26, ZP	2
8	GA5050450	GREASE NIPPLE, 6mm	2
9	GA5069995	GREASE FITTING LINE CONNECTOR ELBOW 6mm	2
10	GA5069985	GREASE FITTING LINE CONNECTOR STRAIGHT 6mm	2
11	GA3500700	HYDRAULIC ADAPTOR, ELBOW, 90 DEGREE, 9/16" JIC MALE X 3/4" UN MALE O-RING, S91-0912	2
12	GA3500147	HYDRAULIC ADAPTOR, NIPPLE, 9/16" JIC MALE X 3/4" UN MALE O-RING, S90-0912	2
13	GA4602930	KNUCKLE, CENTRE SECTION, TILT CYLINDER, TRITECH, MY20	2
14	GA0500071	NUT 1 1/4", NYLOC, ZP, UNC	4
15	GA5012439	NUT 1" NYLOC UNC ZP	4
16	GA4406820	PLATE, REVERSE LIGHT AND CAMERA MOUNT	1
17	GA5017659	WASHER 1 FLAT ZP HD (5mm THICK)	8
18	GA0500072	WASHER, 1 1/4", FLAT, OD 66 X ID 33.3 X 5mm, ZP	8
19	GA3501852	HYDRAULIC CYLINDER, BORE 5", ROD 2.0", STROKE 300mm	2
GA6100830-07 GOLDACRES		CENTRE AND PARALIFT REAR ASSEMBLY, 48M BOOM, CONFIGURABLE, G6, MY20	REV 04

Hydraulic Cylinder Assembly, Fold, 48mt

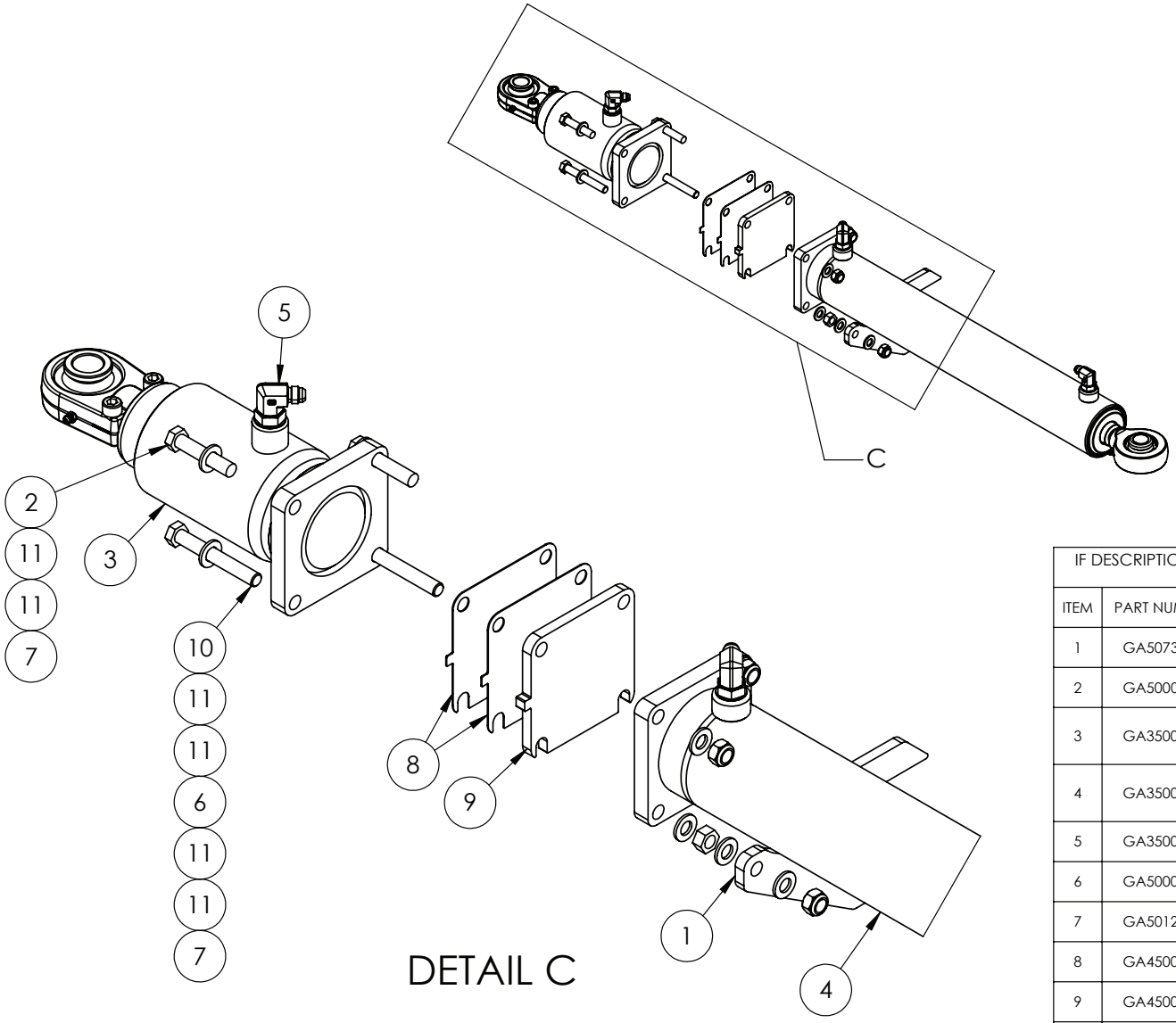

SEE HYDRAULICS FOR CYLINDER SUB-ASSEMBLY

IF DESCRIPTION PREFIX IS ASSEMBLY DRAWING ONLY OR PRODUCTION DRAWING ONLY THE ITEM IS NOT FOR SALE

ITEM	PART NUMBER	DESCRIPTION	QTY
1	GA5073235	ANTI ROTATION BRACKET, HYDRAULIC FOLD CYLINDER, 48m BOOM	1
2	GA5000335	BOLT M12 X 60 GR8.8 ZP	2
3	GA3500656	HYDRAULIC CYLINDER, DISPLACMENT (CUSHION), 3.25" BORE, 3" ROD, FLANGE BASE MOUNT, 1" ROSE END	1
4	GA3500655	HYDRAULIC CYLINDER, DOUBLE ACTING, 3.25" BORE, 1.5" ROD, FLANGE BASE MOUNT, 1" ROSE END	1
5	GA3500700	HYDRAULIC ADAPTOR, ELBOW, 90 DEGREE, 9/16" JIC MALE X 3/4" UN MALE O-RING, S91-0912	3
6	GA5000559	NUT M12 HEX ZP	2
7	GA5012461	NUT M12 NYLOC ZP	4
8	GA4500975	PLATE, SHIM, FOLD CYLINDER, 48M BOOM	2
9	GA4500976	PLATE, SHIM, 10mm, FOLD CYLINDER, 48M BOOM	1
10	GA0500081	SET SCREW M12 X 90 GR8.8, ZP	2
11	GA5000577	WASHER 12mm FLAT SS HD	12
GA3500840 GOLDACRES		ASSEMBLY DRAWING ONLY, HYDRAULIC CYLINDER, FOLD, 48M, G6, MY20	REV 00.C

Hydraulic, Centre Leveling

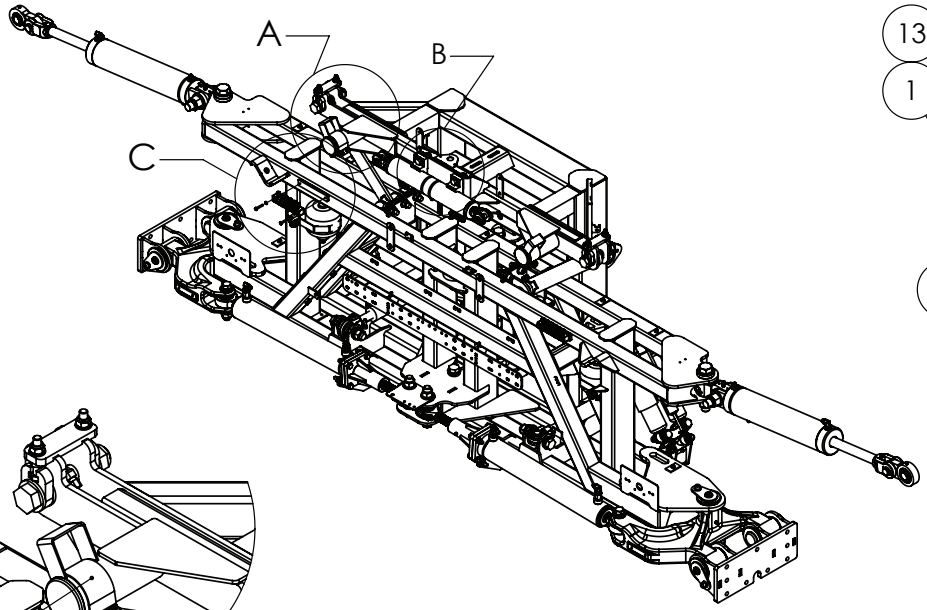

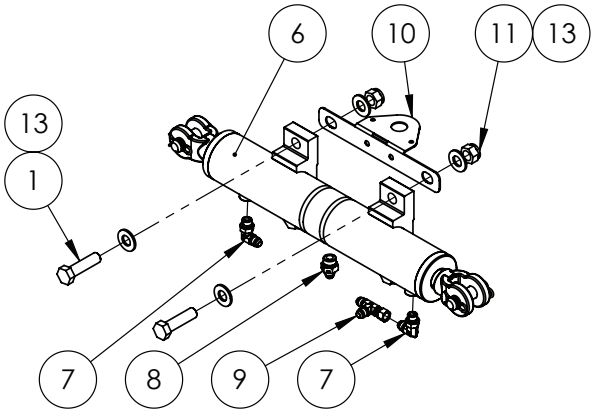

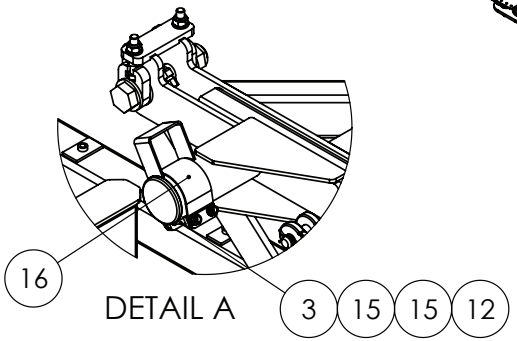

DETAIL A

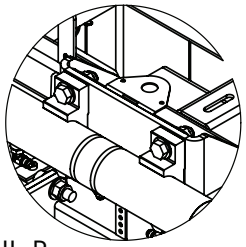

DETAIL B

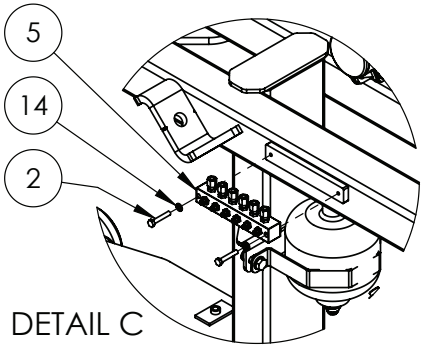

DETAIL C

IF DESCRIPTION PREFIX IS ASSEMBLY DRAWING ONLY OR PRODUCTION DRAWING ONLY THE ITEM IS NOT FOR SALE			
ITEM	PART NUMBER	DESCRIPTION	QTY
1	GA5000941	BOLT M16 X 60 GR8.8 ZP	4
2	GA5011405	BOLT M6 X 35 GR8.8 ZP	4
3	GA5052710	BOLT M8 X 65 GR 8.8 ZP	1
4	GA5004749	BOLT M8 X 80 GR8.8 ZP	3
5	GA5070000	GREASE FITTING HEADER BLOCK 6 WAY, INC. 6mm LINE ADAPTORS AND STRAIGHT GREASE NIPPLES AND PLUGS	2
6	GA3500477	HYDRAULIC CYLINDER, CENTRE LEVEL 2016	1
7	GA3500716	HYDRAULIC ADAPTOR, ELBOW, 90 DEGREE, 9/16" JIC MALE X 9/16" UN MALE O-RING, S91-0909	2
8	GA3500147	HYDRAULIC ADAPTOR, NIPPLE, 9/16" JIC MALE X 3/4" UN MALE O-RING, S90-0912	1
9	GA3500144	HYDRAULIC ADAPTOR, TEE, 9/16" JIC MALE X 9/16" JIC MALE X 9/16" JIC FEMALE SWIVEL, S67-090909	1
10	GA4525240	MOUNTING PLATE, BOLT ON BEACON SUIT CENTRE SECTION	1
11	GA5001029	NUT M16 NYLOC ZP	4
12	GA5004917	NUT M8 NYLOC ZP	4
13	GA5001043	WASHER 16mm FLAT SS HD	8
14	GA5004437	WASHER 6mm FLAT SS	4
15	GA5003643	WASHER 8mm FLAT SS HD	8
16	GA4506750	WEAR STRIP SS FOR CENTRE LEVELING CABLES	2
GA6101110-08 GOLDACRES		CENTRE AND PARALIFT REAR ASSEMBLY, 36M BOOM, PRAIRIE PRO, MY22	REV 01

Hydraulic Manifold Mounting, Centre Section, 24mt - 36mt

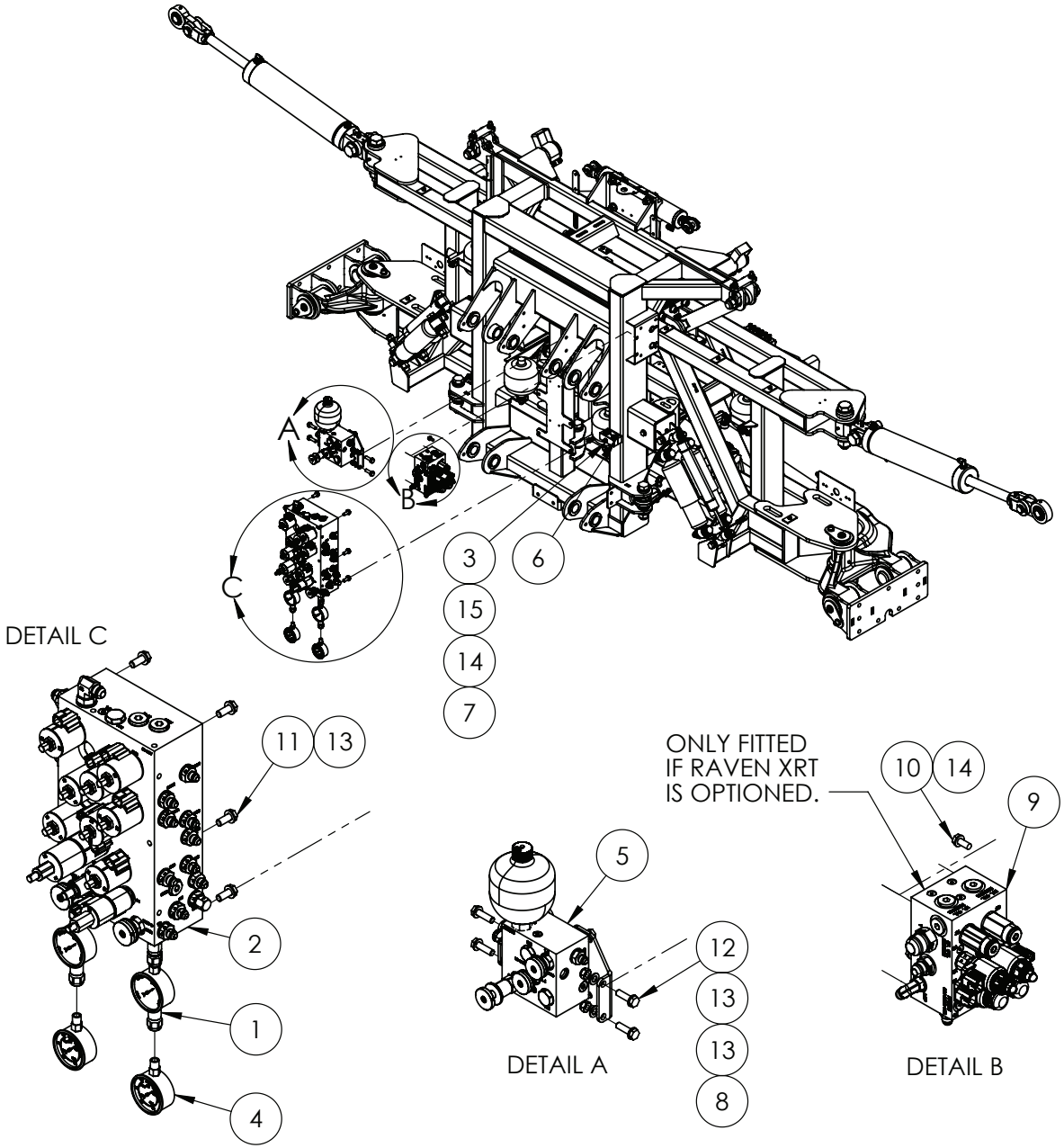

IF DESCRIPTION PREFIX IS ASSEMBLY DRAWING ONLY OR PRODUCTION DRAWING ONLY THE ITEM IS NOT FOR SALE			
ITEM	PART NUMBER	DESCRIPTION	QTY
1	GA5077350	ADAPTOR, DIRECT GAUGE, M16 X 2.0 FEMALE X 1/4" BSPP FEMALE	2
2	GA6101260	ASSEMBLY DRAWING ONLY. HYDRAULIC MANIFOLD ASSEMBLY, BOOM CONTROL, MY20	1
3	GA5004727	BOLT M8 X 50 GR8.8 ZP	1
4	GA5078076	GAUGE, PRESSURE, 250 BAR, 3500PSI	2
5	GA4949530	HYDRAULIC MANIFOLD ASSEMBLY, BREAKAWAY WITH MOUNT PLATE, G6 MY20	1
6	GA5073800	MOUNTING CLAMP, DOUBLE TYPE, JAW, PAIR, GROUP 4, 30mm, BLACK, RCD-30J	1
7	GA5078049	MOUNTING CLAMP, DOUBLE TYPE, PLATE, TOP, GROUP 4, RCD-4PT	1
8	GA5000141	NUT M10 NYLOC ZP	4
9	GA4949620	PRODUCTION DRAWING ONLY. VALVE, HYDRAULIC, RAVEN XRT ULTRAGLIDE, LOAD SENSE	1
10	GA5048485	SET SCREW 5/16 BSW X 3/4 SS A2-70	3
11	GA5006161	SET SCREW M10 X 25 GR8.8 ZP	6
12	GA5006111	SET SCREW M10 X 35 GR8.8 ZP	4
13	GA5000117	WASHER 10mm FLAT SS HD	14
14	GA5003643	WASHER 8mm FLAT SS HD	4
15	GA5004919	WASHER 8mm SPRING SS	1
GA6101110-09 GOLDACRES		CENTRE AND PARALIFT REAR ASSEMBLY, 36M BOOM, PRAIRIE PRO, MY22	REV 00

Hydraulic Manifold, Mounting Bracket, Breakaway

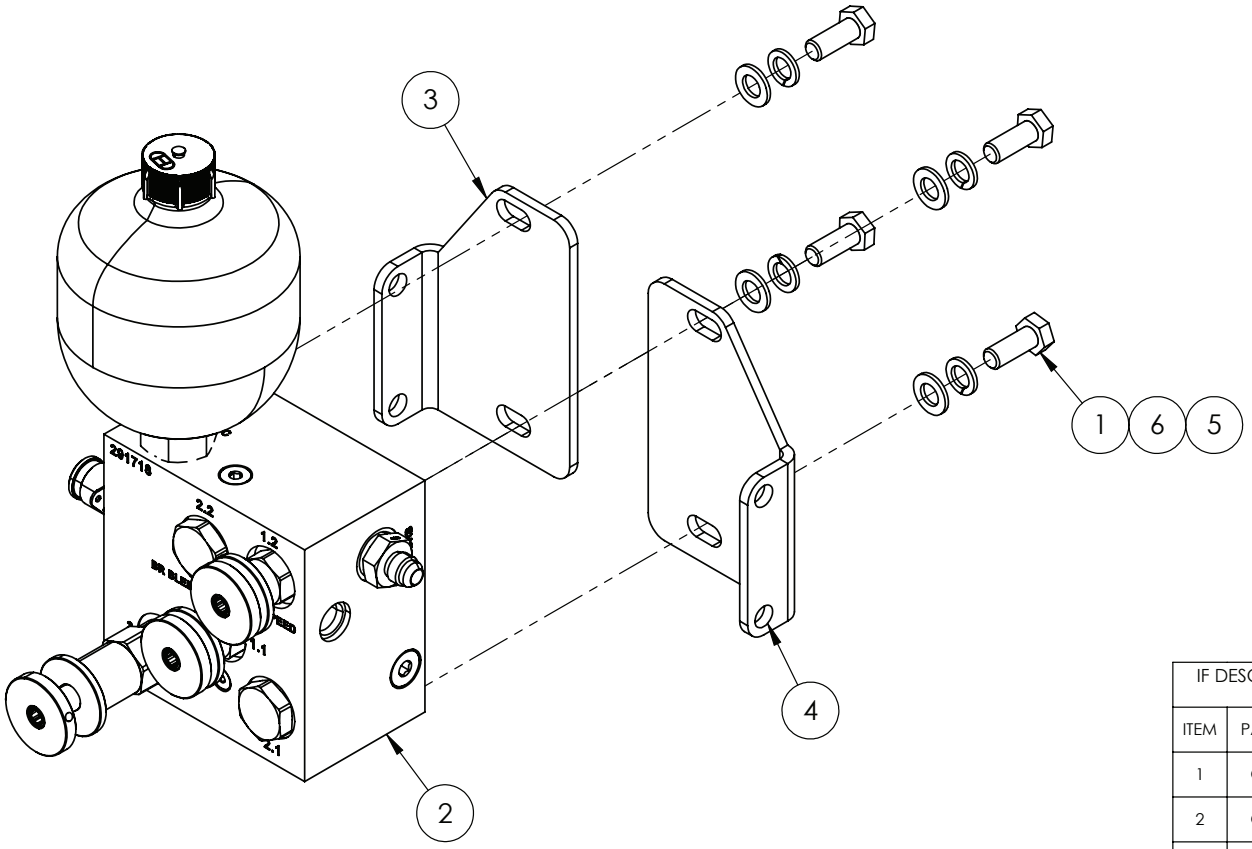

IF DESCRIPTION PREFIX IS ASSEMBLY DRAWING ONLY OR PRODUCTION DRAWING ONLY THE ITEM IS NOT FOR SALE			
ITEM	PART NUMBER	DESCRIPTION	QTY
1	GA5006161	BOLT M10 X 25 GR8.8 ZP	4
2	GA3500704	HYDRAULIC MANIFOLD ASSEMBLY, BOOM BREAKAWAY, G6 MY20	1
3	GA4407650	PLATE, PLATE, BREAKAWAY HYDRAULIC MANIFOLD MOUNT, LH, G6 MY20	1
4	GA4407655	PLATE, PLATE, BREAKAWAY HYDRAULIC MANIFOLD MOUNT, RH, G6 MY20	1
5	GA5000117	WASHER 10mm FLAT SS HD	4
6	GA5000137	WASHER 10mm SPRING SS	4
GA4949530 GOLDACRES		HYDRAULIC MANIFOLD ASSEMBLY, BREAKAWAY WITH MOUNT PLATE, G6 MY20	REV 01

Hydraulic Manifold Mounting, Centre Section, 48mt

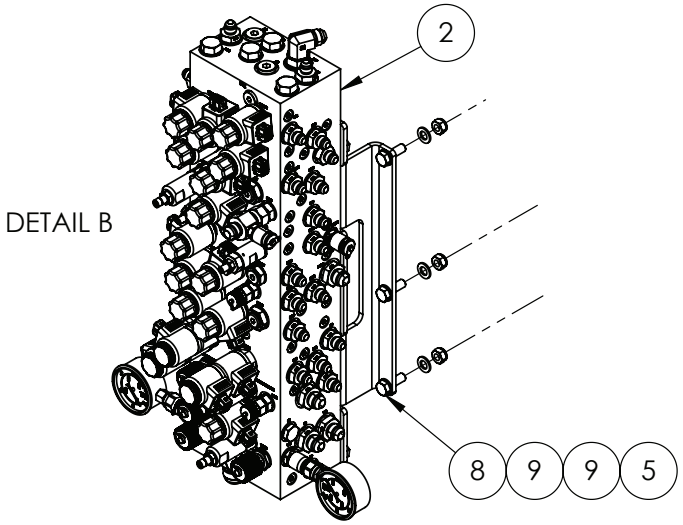

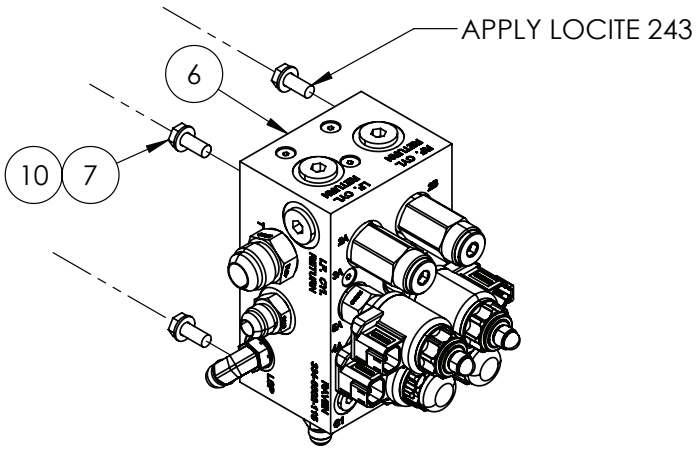

DETAIL A

ONLY FITTED IF RAVEN XRT IS OPTIONED.

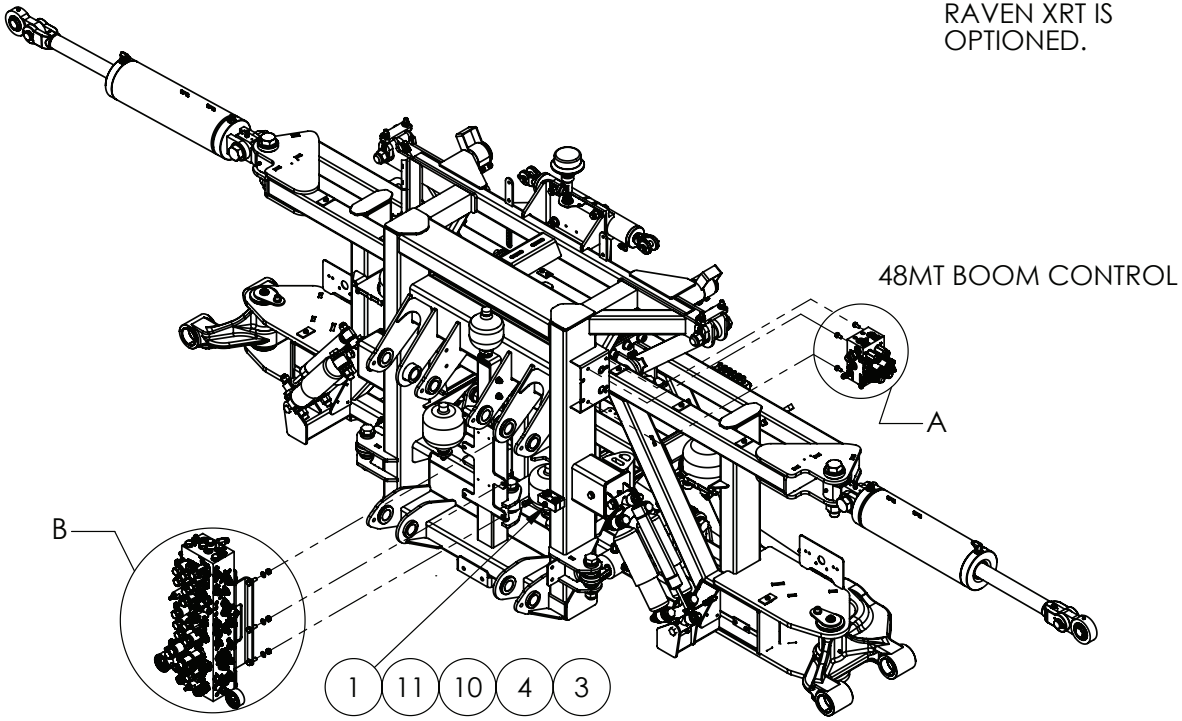

IF DESCRIPTION PREFIX IS ASSEMBLY DRAWING ONLY OR PRODUCTION DRAWING ONLY THE ITEM IS NOT FOR SALE			
ITEM	PART NUMBER	DESCRIPTION	QTY
1	GA5004727	BOLT M8 X 50 GR8.8 ZP	1
2	GA4949550	HYDRAULIC CONTROL MANIFOLD ASSEMBLY, 48M BOOM, MY20	1
3	GA5073800	MOUNTING CLAMP, DOUBLE TYPE, JAW, PAIR, GROUP 4, 30mm, BLACK, RCD-30J	1
4	GA5078049	MOUNTING CLAMP, DOUBLE TYPE, PLATE, TOP, GROUP 4, RCD-4PT	1
5	GA5000141	NUT M10 NYLOC ZP	6
6	GA4949620	PRODUCTION DRAWING ONLY. VALVE, HYDRAULIC, RAVEN XRT ULTRAGLIDE, LOAD SENSE	1
7	GA5048485	SET SCREW 5/16 BSW X 3/4 SS A2-70	3
8	GA5065455	SET SCREW M10 X 30 GR8.8 ZP	6
9	GA5000117	WASHER 10mm FLAT SS HD	12
10	GA5003643	WASHER 8mm FLAT SS HD	4
11	GA5004919	WASHER 8mm SPRING SS	1
GA6100830-09 GOLDACRES	CENTRE AND PARALIFT REAR ASSEMBLY, 48M BOOM, CONFIGURABLE, G6, MY20		REV 00.C

Hydraulic Manifold, Adaptor Fittings, Raven XRT

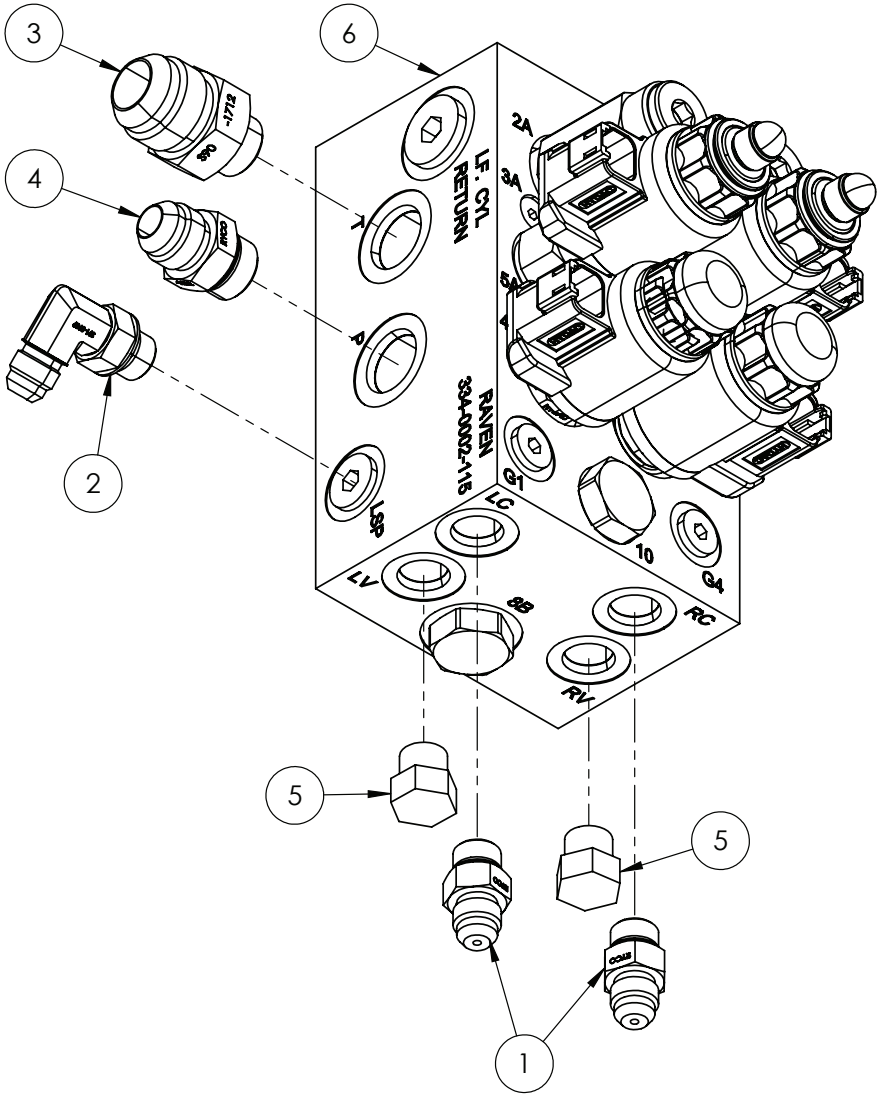

IF DESCRIPTION PREFIX IS ASSEMBLY DRAWING ONLY OR PRODUCTION DRAWING ONLY THE ITEM IS NOT FOR SALE			
ITEM	PART NUMBER	DESCRIPTION	QTY
1	GA3500146	HYDRAULIC ADAPTOR, 9/16" JICM, 9/16" UNOM, S90-0909, RYCO	2
2	GA3500716	HYDRAULIC ADAPTOR, ELBOW, 90 DEGREE, 9/16" JIC MALE X 9/16" UN MALE O-RING, S91-0909	1
3	GA3500738	HYDRAULIC ADAPTOR, NIPPLE, 1 1/16" JIC MALE X 3/4" UN MALE O-RING, S90-1712	1
4	GA3500739	HYDRAULIC ADAPTOR, NIPPLE, 3/4" JIC MALE X 3/4" UN MALE O-RING, S90-1212	1
5	GA3500380	HYDRAULIC ADAPTOR, PLUG, 9/16" UN MALE O-RING, S97-09	2
6	GA3000385	VALVE, HYDRAULIC, RAVEN XRT ULTRAGLIDE, LOAD SENSE, 334-0235-002	1
GA4949620 GOLDACRES		PRODUCTION DRAWING ONLY. VALVE, HYDRAULIC, RAVEN XRT ULTRAGLIDE, LOAD SENSE	REV 01

Hydraulic Manifold, Boom Control without Raven XRT, 24m - 30m

OPTION 10210 - 24m RIVX BOOM
OPTION 10220 - 28m RIVX BOOM
OPTION 10230 - 30m RIVX BOOM

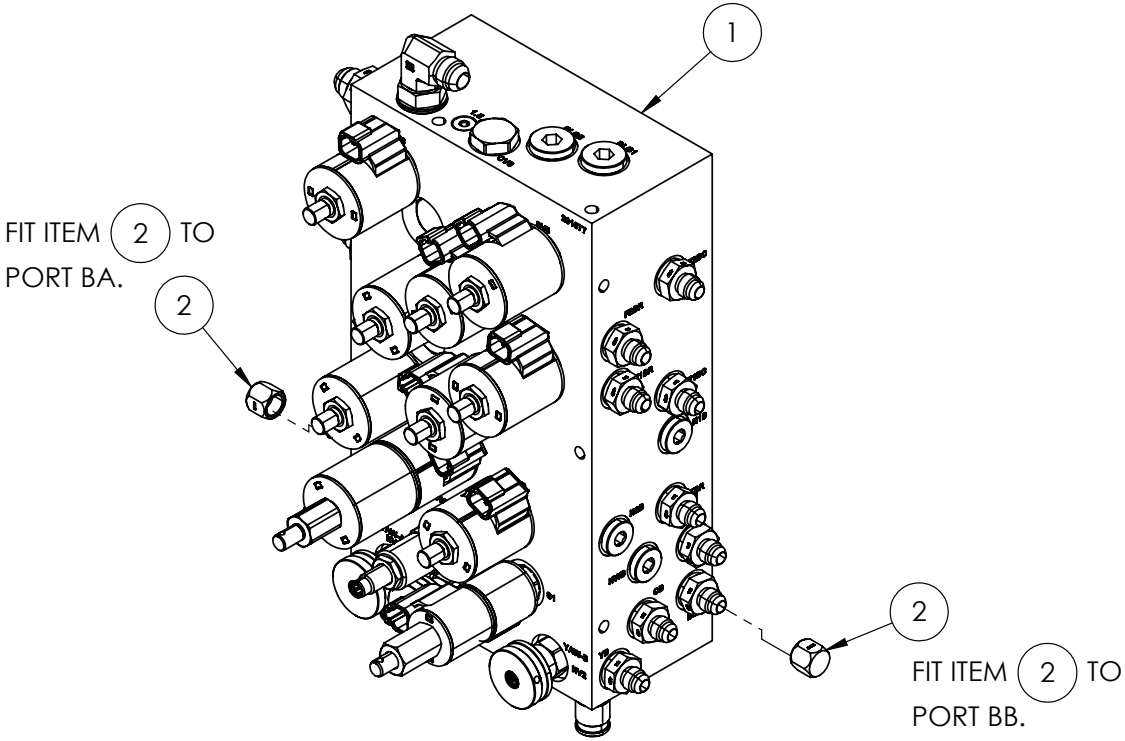

IF DESCRIPTION PREFIX IS ASSEMBLY DRAWING ONLY OR PRODUCTION DRAWING ONLY THE ITEM IS NOT FOR SALE			
ITEM	PART NUMBER	DESCRIPTION	QTY.
1	GA3500677	HYDRAULIC MANIFOLD ASSEMBLY, BOOM CONTROL, G6 MY20	1
2	GA3500793	HYDRAULIC ADAPTOR, PLUG, 9/16" JIC FEMALE, S65-09	2
GA6101260 GOLDACRES		ASSEMBLY DRAWING ONLY. HYDRAULIC MANIFOLD ASSEMBLY, BOOM CONTROL, MY20	REV 00

Hydraulic Manifold, Boom Control with Raven XRT, 24mt

OPTION 30074 - RAVEN XRT
OPTION 10210 - 24m RIVX BOOM

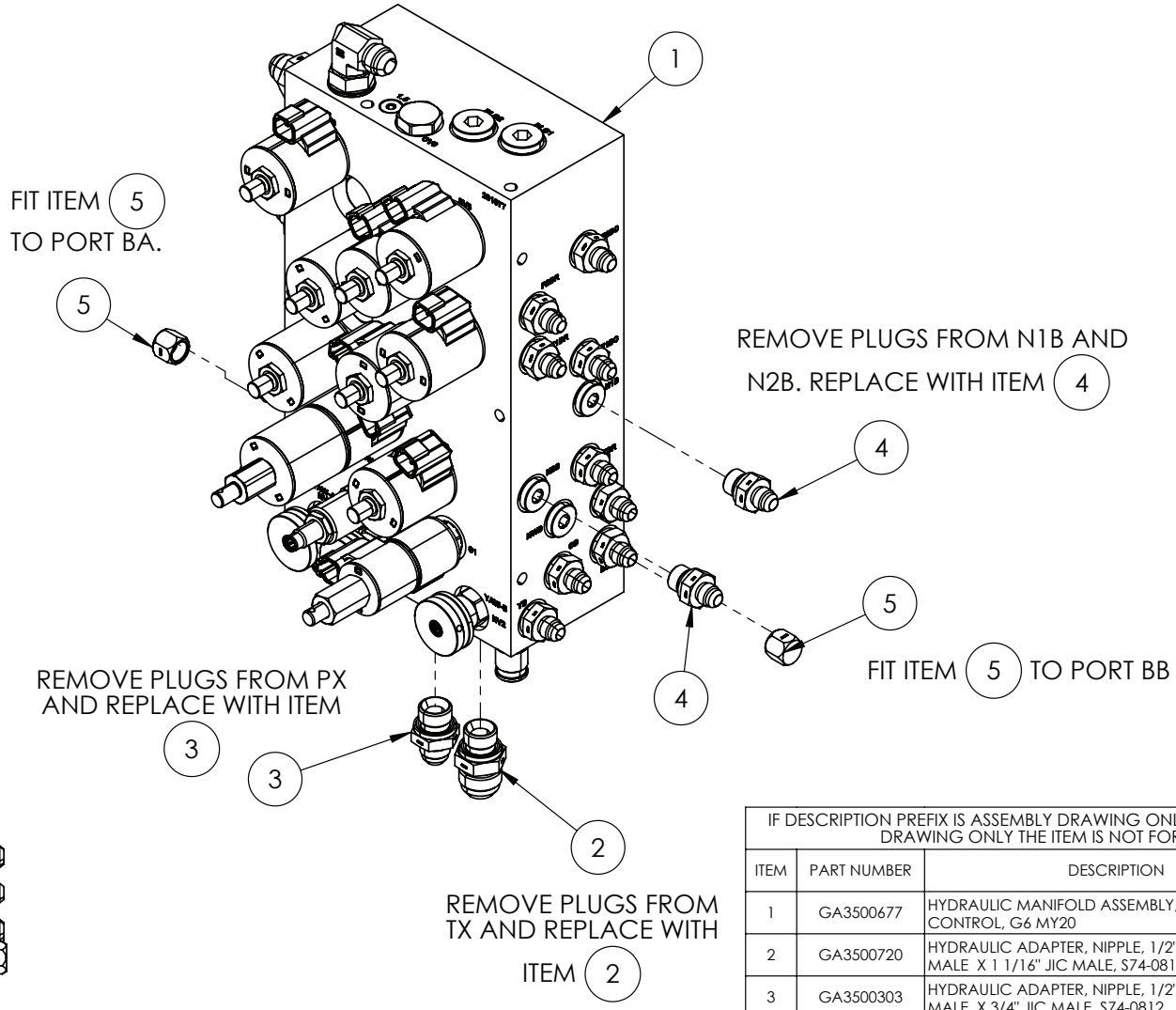

BOTTOM VIEW

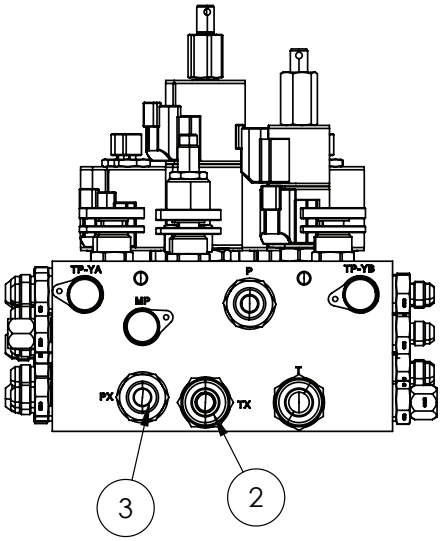

IF DESCRIPTION PREFIX IS ASSEMBLY DRAWING ONLY OR PRODUCTION DRAWING ONLY THE ITEM IS NOT FOR SALE			
ITEM	PART NUMBER	DESCRIPTION	QTY
1	GA3500677	HYDRAULIC MANIFOLD ASSEMBLY, BOOM CONTROL, G6 MY20	1
2	GA3500720	HYDRAULIC ADAPTER, NIPPLE, 1/2" BSPP O-RING MALE X 1 1/16" JIC MALE, S74-0817	1
3	GA3500303	HYDRAULIC ADAPTER, NIPPLE, 1/2" BSPP O-RING MALE X 3/4" JIC MALE, S74-0812	1
4	GA3500145	HYDRAULIC ADAPTOR, NIPPLE, 3/8" BSPP O-RING MALE X 9/16" JIC MALE, S74-0609	2
5	GA3500793	HYDRAULIC ADAPTOR, PLUG, 9/16" JIC FEMALE, S65-09	2
GA6101260 GOLDACRES		ASSEMBLY DRAWING ONLY. HYDRAULIC MANIFOLD ASSEMBLY, BOOM CONTROL, MY20	REV 01

Hydraulic Manifold, Boom Control with Raven XRT, 28mt - 42mt

OPTION 30074 - RAVEN XRT
OPTION 10220 - 28m RIVX BOOM
OPTION 10230 - 30m RIVX BOOM
OPTION 10250 - 36m RIVX BOOM
OPTION 10260 - 42m RIVX BOOM

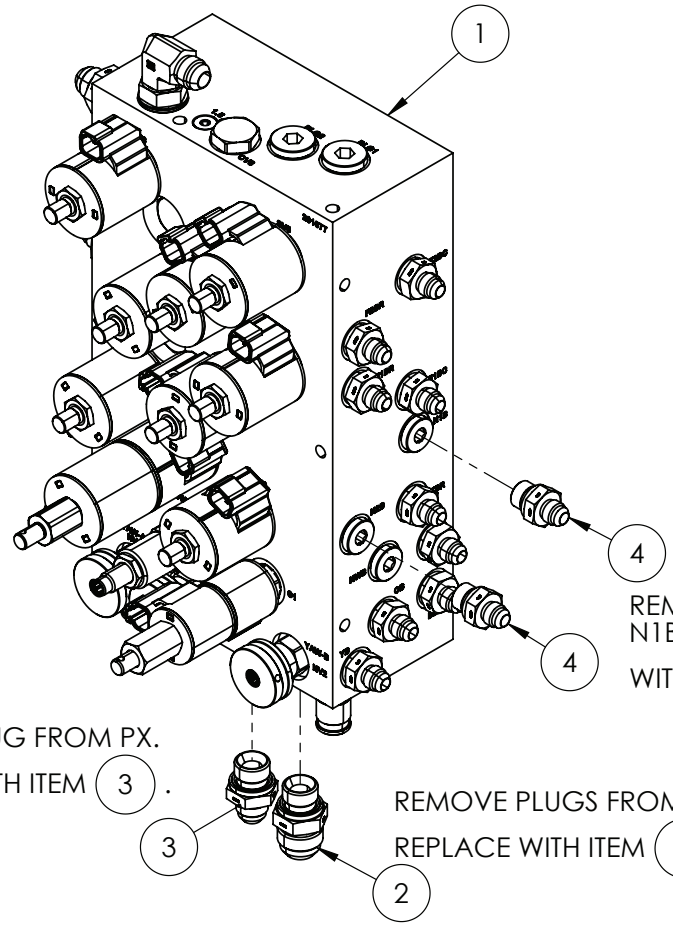

REMOVE PLUGS FROM N1B AND N2B. REPLACE WITH ITEM (4).

REMOVE PLUG FROM PX. REPLACE WITH ITEM (3).

REMOVE PLUGS FROM TX. REPLACE WITH ITEM (2).

BOTTOM VIEW

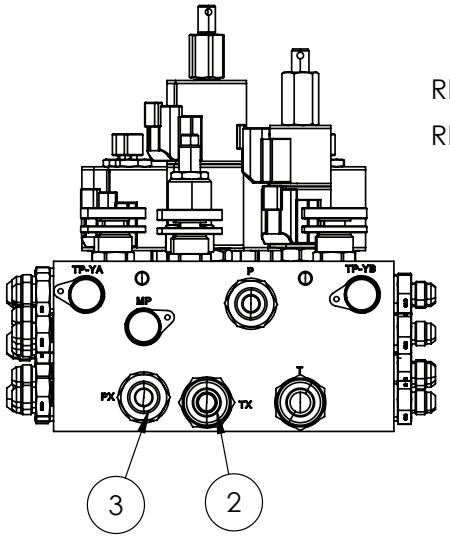

IF DESCRIPTION PREFIX IS ASSEMBLY DRAWING ONLY OR PRODUCTION DRAWING ONLY THE ITEM IS NOT FOR SALE			
ITEM	PART NUMBER	DESCRIPTION	QTY.
1	GA3500677	HYDRAULIC MANIFOLD ASSEMBLY, BOOM CONTROL, G6 MY20	1
2	GA3500720	HYDRAULIC ADAPTER, NIPPLE, 1/2" BSPP O-RING MALE X 1 1/16" JIC MALE, S74-0817	1
3	GA3500303	HYDRAULIC ADAPTER, NIPPLE, 1/2" BSPP O-RING MALE X 3/4" JIC MALE, S74-0812	1
4	GA3500145	HYDRAULIC ADAPTOR, NIPPLE, 3/8" BSPP O-RING MALE X 9/16" JIC MALE, S74-0609	2
GA6101260 GOLDACRES		ASSEMBLY DRAWING ONLY. HYDRAULIC MANIFOLD ASSEMBLY, BOOM CONTROL, MY20	REV 01

Hydraulic Manifold, Boom Control Assembly, 48mt (Front View)

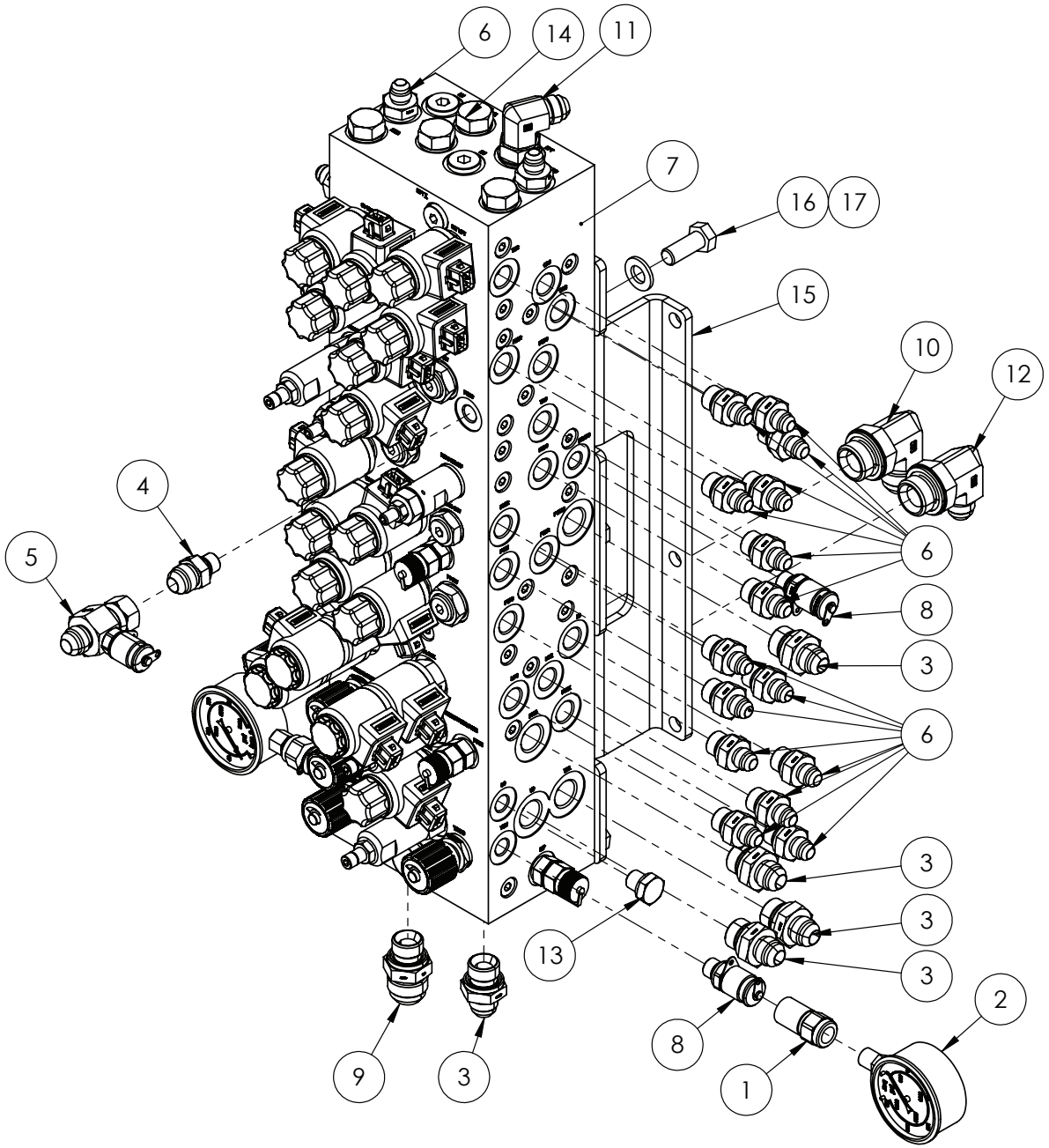

IF DESCRIPTION PREFIX IS ASSEMBLY DRAWING ONLY OR PRODUCTION DRAWING ONLY THE ITEM IS NOT FOR SALE			
ITEM	PART NUMBER	DESCRIPTION	QTY
1	GA5077350	ADAPTOR, DIRECT GAUGE, M16 X 2.0 FEMALE X 1/4" BSPP FEMALE	2
2	GA5078076	GAUGE, PRESSURE, 250 BAR, 3500PSI	2
3	GA3500303	HYDRAULIC ADAPTOR NIPPLE, 1/2" BSPP TO 3/4" JIC	7
4	GA3501089	HYDRAULIC ADAPTOR, 1/4" BSPP MALE X 3/4" JIC MALE, S74-0412	1
5	GA3501091	HYDRAULIC ADAPTOR, 3/4" JIC FEMALE SWIVEL X 3/4" JIC MALE X TEST POINT, S159-121216	1
6	GA3500145	HYDRAULIC ADAPTOR, 3/8" BSPPOM, 9/16" JICM, NIPPLE, S74-0609, RYCO	30
7	GA3500603	HYDRAULIC CONTROL MANIFOLD, 48m BOOM	1
8	GA3500133	HYDRAULIC COUPLING, EASY TEST POINT, 1/4" BSPP	4
9	GA3500720	HYDRAULIC ADAPTER, NIPPLE, 1/2" BSPP O-RING MALE X 1 1/16" JIC MALE, S74-0817	1
10	GA3500900	SEAL KIT, OILPATH, SK16-2N-T	1
11	GA3501193	HYDRAULIC CARTRIDGE, PROPORTIONAL VALVE, OILPATH, PV72-20AG-0-N-12ER	1
12	GA3500733	HYDRAULIC ADAPTOR, ELBOW, 90 DEGREE, 3/4" JIC MALE X 3/4" BSPP MALE O-RING, S76-1212	1
13	GA3500299	HYDRAULIC ADAPTOR, PLUG, 1/4" BSPP MALE, 6119171	1
14	GA3500300	HYDRAULIC ADAPTOR, PLUG, 3/8" BSPP MALE	4
15	GA4406405	PLATE, MOUNT, HYDRAULIC MANIFOLD, 48m BOOM, CENTRE SECTION	1
16	GA5000305	SET SCREW M12 X 30 GR8.8 ZP	6
17	GA5000577	WASHER 12mm FLAT SS HD	6
GA4949550 GOLDACRES		HYDRAULIC CONTROL MANIFOLD ASSEMBLY, 48M BOOM, MY20	REV 03

Hydraulic Manifold, Boom Control Assembly, 48mt (Rear View)

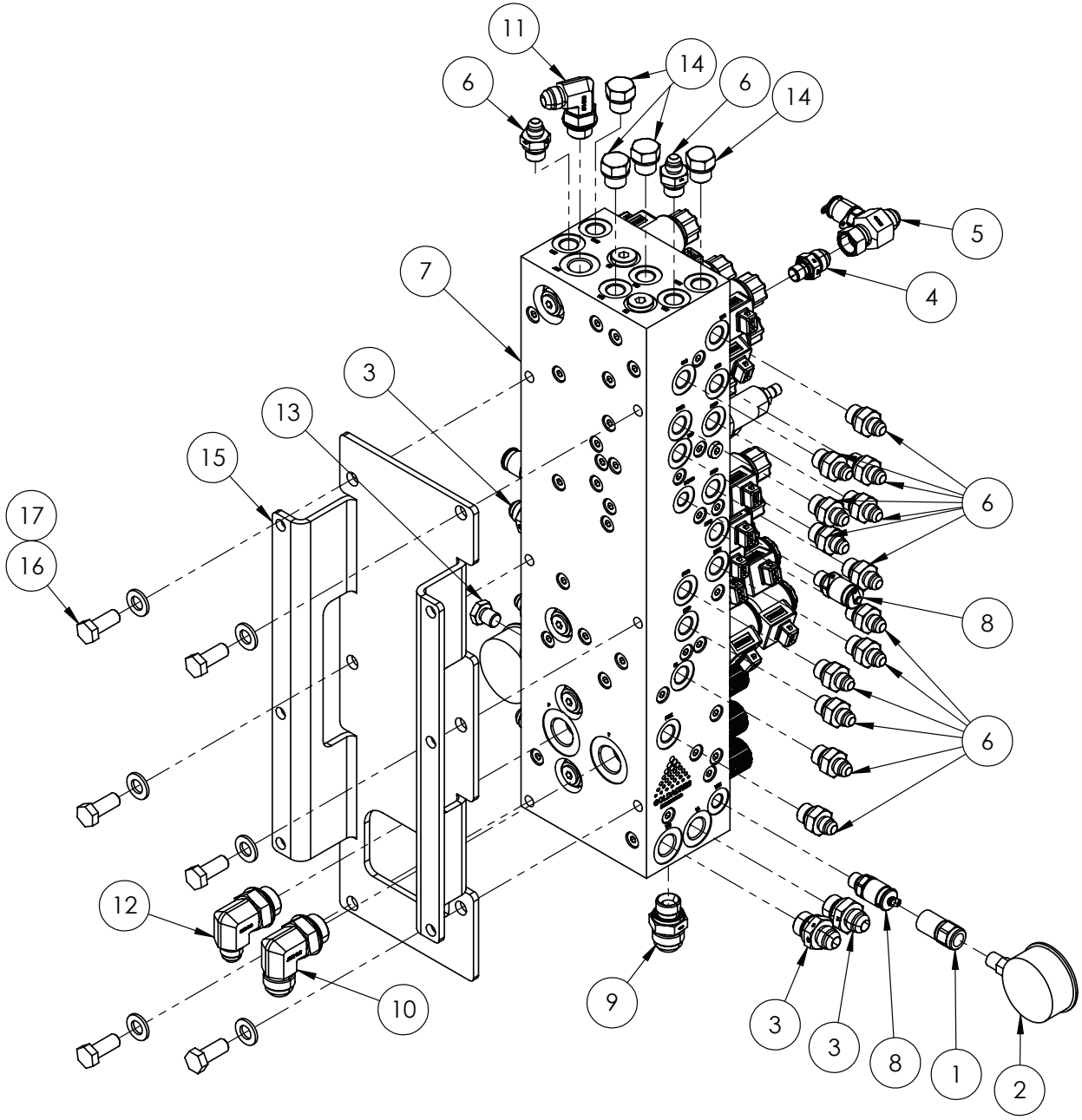

IF DESCRIPTION PREFIX IS ASSEMBLY DRAWING ONLY OR PRODUCTION DRAWING ONLY THE ITEM IS NOT FOR SALE			
ITEM	PART NUMBER	DESCRIPTION	QTY
1	GA5077350	ADAPTOR, DIRECT GAUGE, M16 X 2.0 FEMALE X 1/4" BSPP FEMALE	2
2	GA5078076	GAUGE, PRESSURE, 250 BAR, 3500PSI	2
3	GA3500303	HYDRAULIC ADAPTOR NIPPLE, 1/2" BSPP TO 3/4" JIC	7
4	GA3501089	HYDRAULIC ADAPTOR, 1/4" BSPP MALE X 3/4" JIC MALE, S74-0412	1
5	GA3501091	HYDRAULIC ADAPTOR, 3/4" JIC FEMALE SWIVEL X 3/4" JIC MALE X TEST POINT, S159-121216	1
6	GA3500145	HYDRAULIC ADAPTOR, 3/8" BSPPOM, 9/16" JICM, NIPPLE, S74-0609, RYCO	30
7	GA3500603	HYDRAULIC CONTROL MANIFOLD, 48m BOOM	1
8	GA3500133	HYDRAULIC COUPLING, EASY TEST POINT, 1/4" BSPP	4
9	GA3500720	HYDRAULIC ADAPTER, NIPPLE, 1/2" BSPP O-RING MALE X 1 1/16" JIC MALE, S74-0817	1
10	GA3500900	SEAL KIT, OILPATH, SK16-2N-T	1
11	GA3501193	HYDRAULIC CARTRIDGE, PROPORTIONAL VALVE, OILPATH, PV72-20AG-0-N-12ER	1
12	GA3500733	HYDRAULIC ADAPTOR, ELBOW, 90 DEGREE, 3/4" JIC MALE X 3/4" BSPP MALE O-RING, S76-1212	1
13	GA3500299	HYDRAULIC ADAPTOR, PLUG, 1/4" BSPP MALE, 6119171	1
14	GA3500300	HYDRAULIC ADAPTOR, PLUG, 3/8" BSPP MALE	4
15	GA4406405	PLATE, MOUNT, HYDRAULIC MANIFOLD, 48m BOOM, CENTRE SECTION	1
16	GA5000305	SET SCREW M12 X 30 GR8.8 ZP	6
17	GA5000577	WASHER 12mm FLAT SS HD	6
GA4949550 GOLDACRES		HYDRAULIC CONTROL MANIFOLD ASSEMBLY, 48M BOOM, MY20	REV 03

Boom Centre Level, Chain Assembly & Mounting Clamps

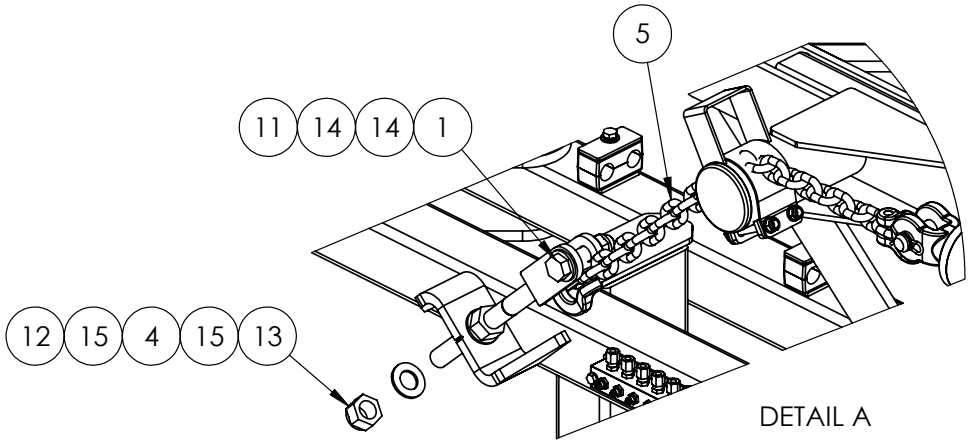

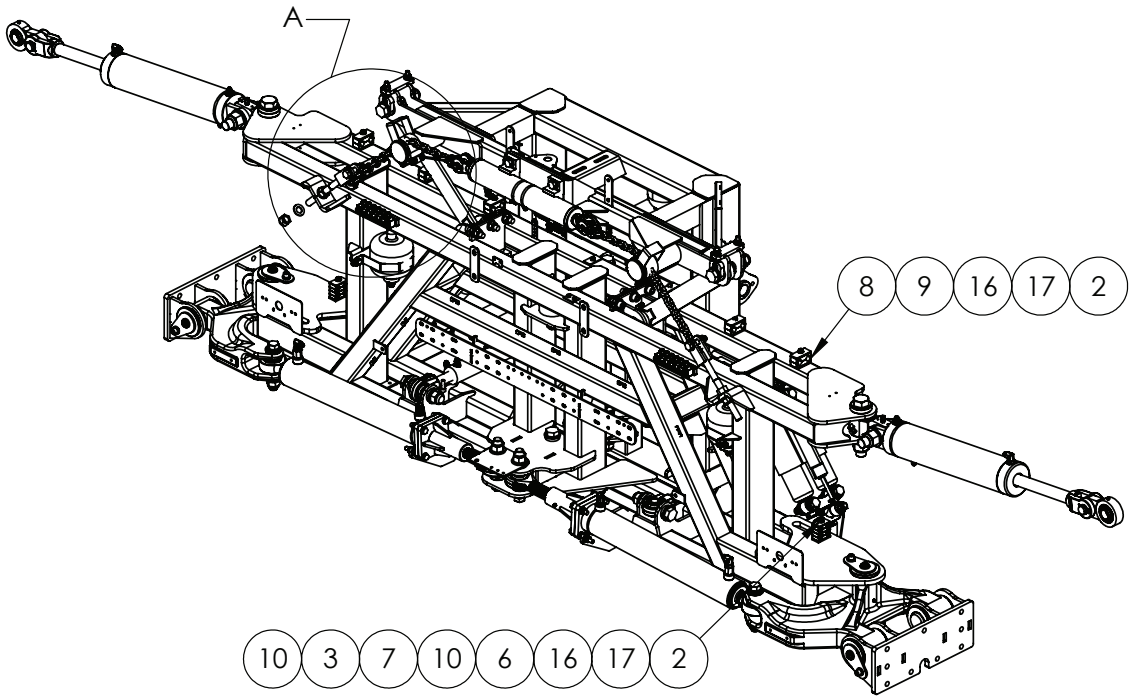

IF DESCRIPTION PREFIX IS ASSEMBLY DRAWING ONLY OR PRODUCTION DRAWING ONLY THE ITEM IS NOT FOR SALE			
ITEM	PART NUMBER	DESCRIPTION	QTY
1	GA5000949	BOLT M16 X 70 GR8.8 ZP	2
2	GA5048655	BOLT M8 X 40 GR8.8 ZP	8
3	GA5070740	BUILD UP BOLT, STACKING, M8 X 20 HYDAC	2
4	GA5020320	CABLE ADJUSTER 20mm THREADED	2
5	GA0500096	CHAIN ASSEMBLY, CENTRE LEVEL, 570mm EYE TO EYE, 8mm WITH EYELETS	2
6	GA5078042	MOUNTING CLAMP, DOUBLE TYPE, PLATE, TOP, GROUP 2, RCD-2PT	2
7	GA5070760	LOCKING PLATE SUIT HYDAC CLAMPS, BUILD UP BOLT, STACKING	2
8	GA5073795	MOUNTING CLAMP, DOUBLE TYPE, JAW, PAIR, GROUP 3, 19mm, BLACK, RCD-19J	6
9	GA5078046	MOUNTING CLAMP, DOUBLE TYPE, PLATE, TOP, GROUP 3, RCD-3PT	6
10	GA5078031	MOUNTING CLAMP, DOUBLE TYPE, JAW, PAIR, GROUP 2, 14mm, RCD-14J	4
11	GA5001029	NUT M16 NYLOC ZP	2
12	GA5001709	NUT M20 COARSE ZP	2
13	GA5048125	NUT M20 NYLOC COARSE ZP	2
14	GA5001043	WASHER 16mm FLAT SS HD	4
15	GA5001741	WASHER 20mm FLAT SS HD	4
16	GA5003643	WASHER 8mm FLAT SS HD	8
17	GA5004919	WASHER 8mm SPRING SS	8
GA6101110-10 GOLDACRES		CENTRE AND PARALIFT REAR ASSEMBLY, 36M BOOM, PRAIRIE PRO, MY22	REV 01

Rate Control, Camera & Working Light Mounting Locations

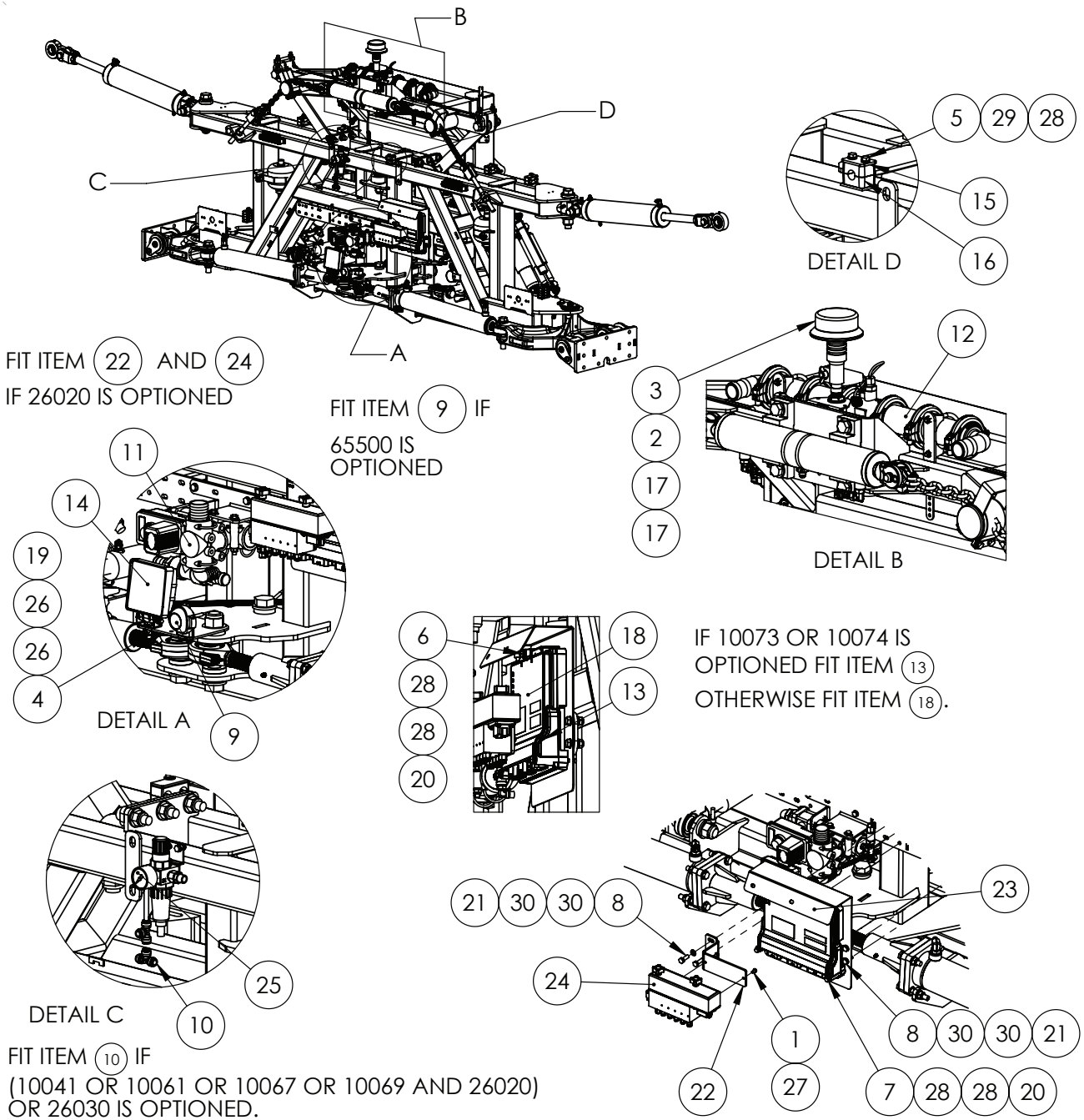

IF DESCRIPTION PREFIX IS ASSEMBLY DRAWING ONLY OR PRODUCTION DRAWING ONLY THE ITEM IS NOT FOR SALE			
ITEM	PART NUMBER	DESCRIPTION	QTY
1	GA0500092	BHCS M5 X 12 GR12.9 ZP	2
2	GA5020411	BEACON MOUNT SCREW ON	1
3	GA5048976	BEACON, LED, AMBER, DIN A POLE MOUNT, FLEXIBLE	1
4	GA5006161	SET SCREW M10 X 25 GR8.8 ZP	1
5	GA5004081	BOLT M6 X 40 GR8.8 ZP	2
6	GA5050175	BOLT M6 X 65 GR8.8 ZP	1
7	GA5011439	BOLT M6 X 80 GR8.8 ZP	2
8	GA5004711	BOLT M8 X 25 GR8.8 ZP	6
9	GA3000400	CAMERA, REAR VIEW, 4:3 PAL, 640X480 PX, 188 X 89 DEG, 12-32V, HEATED, IFM	1
10	GA5067010	EQUAL TEE PUSH IN 8mm	1
11	GA4949455	FLOW DISTRIBUTER AND BOOM RECIRCULATION VALVE ASSEMBLY,G6, MY20	1
12	GA4949215	FLOW METER ASSEMBLY, LONG, RAVEN 60P HIGH PULSE WITH DEUTSCH CONNECTOR, 1 1/2" HOSE BARBS, SUIT RCM ISO BUS	1
13	GA3000510	ISO NODE, RCM, HAWKEYE 2 HD, GOLDACRES, RAVEN, 063-0173-956	1
14	GA4913495	LIGHT, POD WORK LIGHT ASSEMBLY, LED, FLOOD BEAM	1
15	GA5078068	MOUNTING CLAMP, SINGLE TYPE, PLATE, TOP, GROUP 2	1
16	GA5078058	MOUNTING CLAMP, SINGLE TYPE, JAW, PAIR, GROUP 3, 14mm, RCS-14J	2
17	NUT	NUT SUPPLIED WITH BEACON POST	2
18	GA3000202	NODE, RCM, ISOBUS, RATE CONTROL MODULE, LEVEL 2 3TS UNLOCK, RAVEN, 063-0173-942	1
19	GA5000141	NUT M10 NYLOC ZP	1
20	GA5048115	NUT M6 NYLOC ZP	3
21	GA5004917	NUT M8 NYLOC ZP	6
22	GA4412365	PLATE, BRACKET, PNEUMATIC MANIFOLD BULLET VALVE MOUNT, MY22	1
23	GA4404570	PLATE, MOUNT, RCM NODE	1
24	GA7000029	PNEUMATIC MANIFOLD, RAPID FIRE, 10 SECTION, BULLET VALVE	1
25	GA4949595	PRODUCTION DRAWING ONLY. AIR PRESSURE REGULATOR, MY20	1
26	GA5000117	WASHER 10mm FLAT SS HD	2
27	GA5003983	WASHER 5mm FLAT SS	2
28	GA5004437	WASHER 6mm FLAT SS	8
29	GA5004447	WASHER 6mm SPRING SS	2
30	GA5003643	WASHER 8mm FLAT SS HD	12
GA6101110-11 GOLDACRES		CENTRE AND PARALIFT REAR ASSEMBLY, 36M BOOM, PRAIRIE PRO, MY22	REV 00

Pneumatic Manifold Mounting, Rapid Fire, 3TS, 10 Section

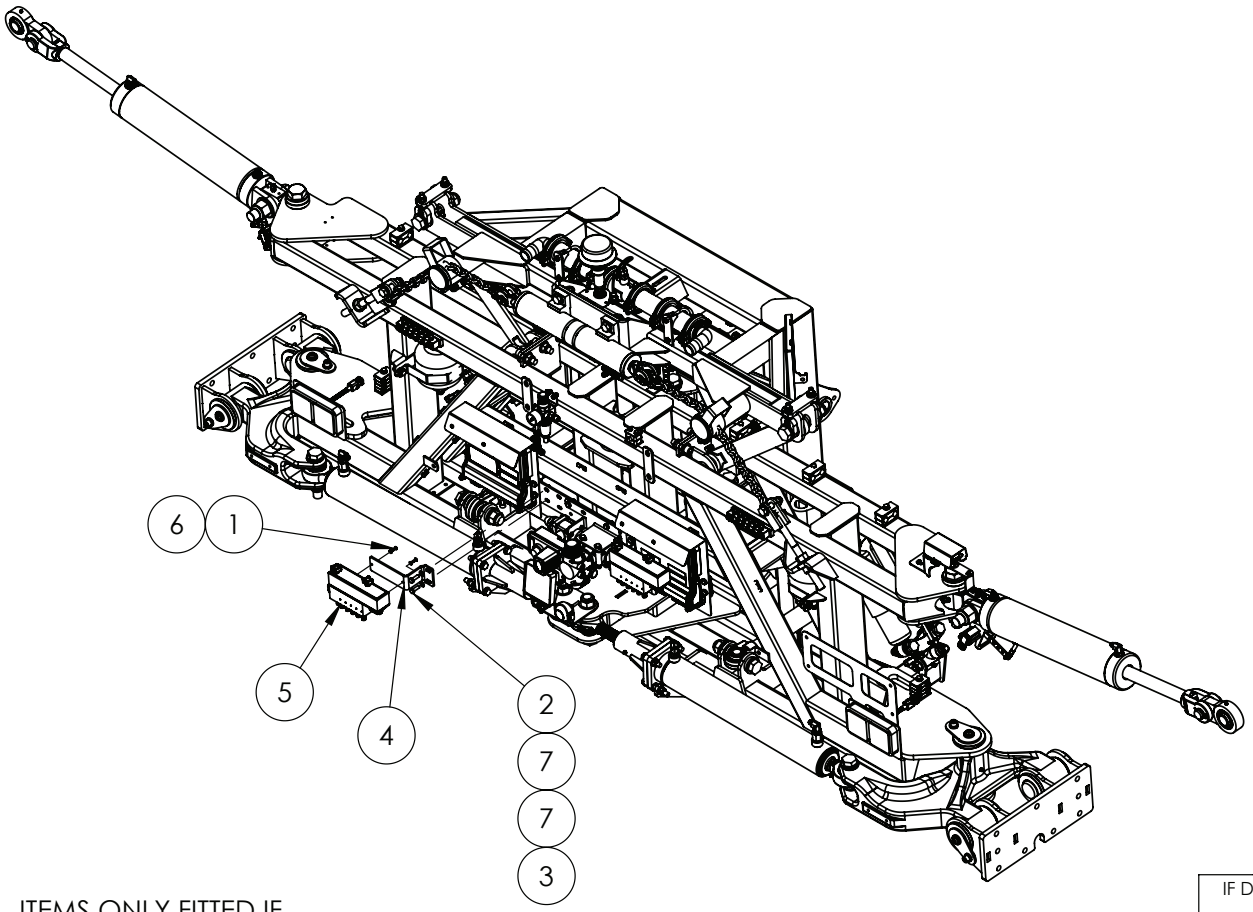

ITEMS ONLY FITTED IF
10041 OR
10061 OR
10067 OR
10069
AND 26020 ARE OPTIONED.

IF DESCRIPTION PREFIX IS ASSEMBLY DRAWING ONLY OR PRODUCTION DRAWING ONLY THE ITEM IS NOT FOR SALE			
ITEM	PART NUMBER	DESCRIPTION	QTY
1	GA0500092	BHCS M5 X 12 GR12.9 ZP	2
2	GA5004711	BOLT M8 X 25 GR8.8 ZP	2
3	GA5004917	NUT M8 NYLOC ZP	2
4	GA4412365	PLATE, BRACKET, PNEUMATIC MANIFOLD BULLET VALVE MOUNT, MY22	1
5	GA7000029	PNEUMATIC MANIFOLD, RAPID FIRE, 10 SECTION, BULLET VALVE	1
6	GA5003983	WASHER 5mm FLAT SS	2
7	GA5003643	WASHER 8mm FLAT SS HD	4
GA6101110-14 GOLDACRES	CENTRE AND PARALIFT REAR ASSEMBLY, 36M BOOM, PRAIRIE PRO, MY22		REV 00

Air Pressure Regulator

REPLACEMENT PARTS			
ITEM	PART NUMBER	DESCRIPTION	QTY
A	GA5054620	BOWL C/W DRAIN, SUIT AIR DRYER / OILER GA5068806	-

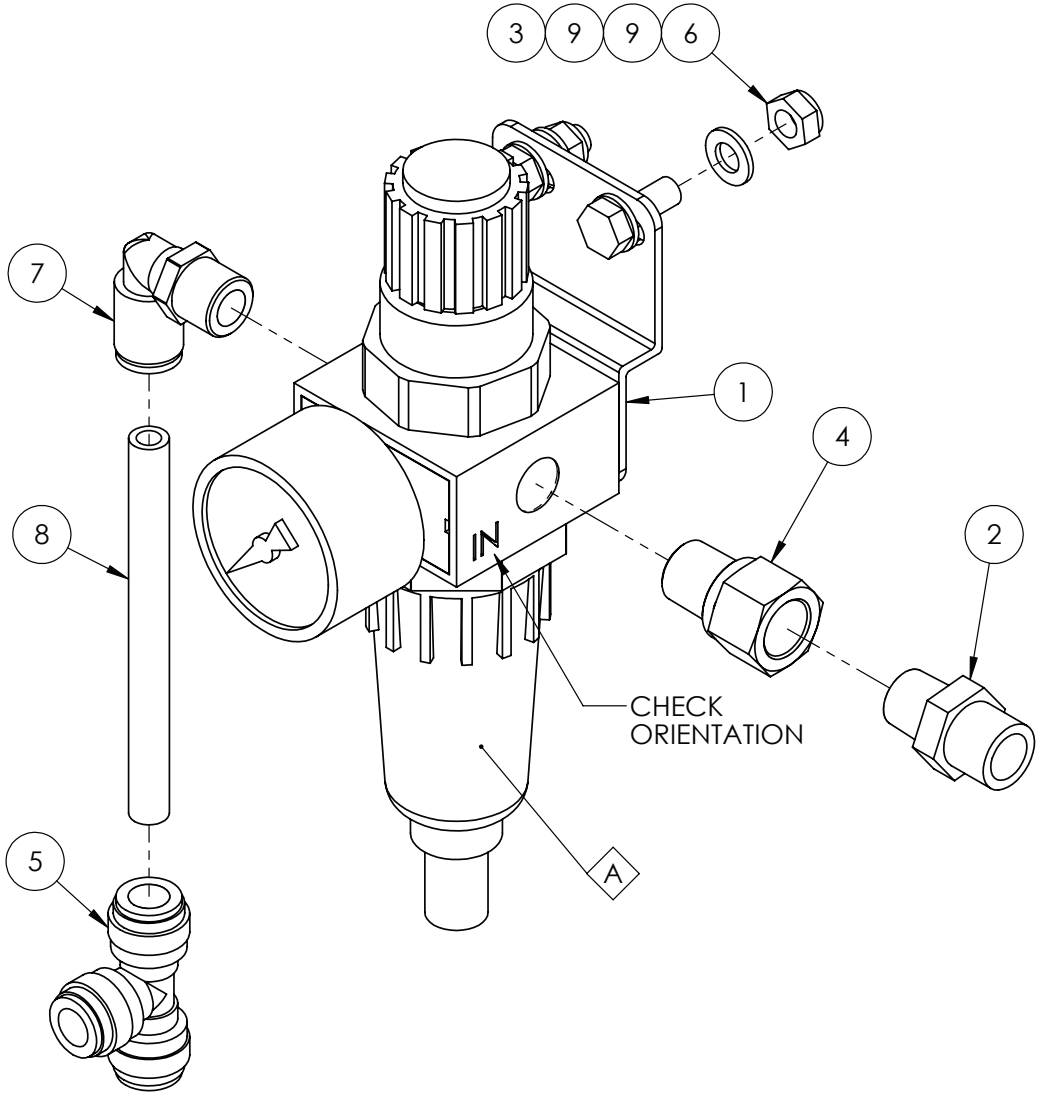

IF DESCRIPTION PREFIX IS ASSEMBLY DRAWING ONLY OR PRODUCTION DRAWING ONLY THE ITEM IS NOT FOR SALE			
ITEM	PART NUMBER	DESCRIPTION	QTY
1	GA5078550	AIR FILTER REGULATOR, G1/4, SEMI AUTO DRAIN, C/W BRACKET, LEGRIS 6700.04.13	1
2	GA5078517	AIR FITTING, STRAIGHT, 3/8" TUBE, 1/4" NPT MALE, PUSH IN, BRASS, ALKON - AQ68-DOT-6X4	1
3	GA5004041	BOLT M6 X 16 GR8.8 ZP	2
4	GA5024510	BRASS ADAPTOR, 1/4" BSPP MALE TO 1/4" NPT FEMALE	1
5	GA5067010	EQUAL TEE PUSH IN 8mm	1
6	GA5048115	NUT M6 NYLOC ZP	2
7	GA5052690	PNEUMATIC FITTING, ELBOW, 90 DEGREE, 1/4 BSP MALE X 8mm PUSH TYPE, METAL	1
8	GA7000017	TUBE, NYLON, 8mm, BLACK, GA5004382 X 90mm	1
9	GA5004437	WASHER 6mm FLAT SS	4
GA4949595 GOLDACRES		PRODUCTION DRAWING ONLY. AIR PRESSURE REGULATOR, MY20	REV 00

Tilt Sensor, Centre Section, Mounting

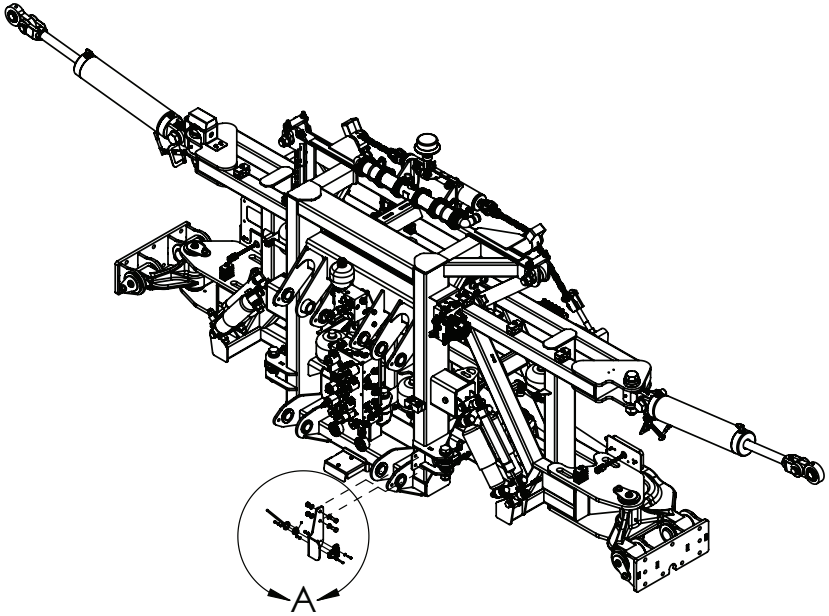

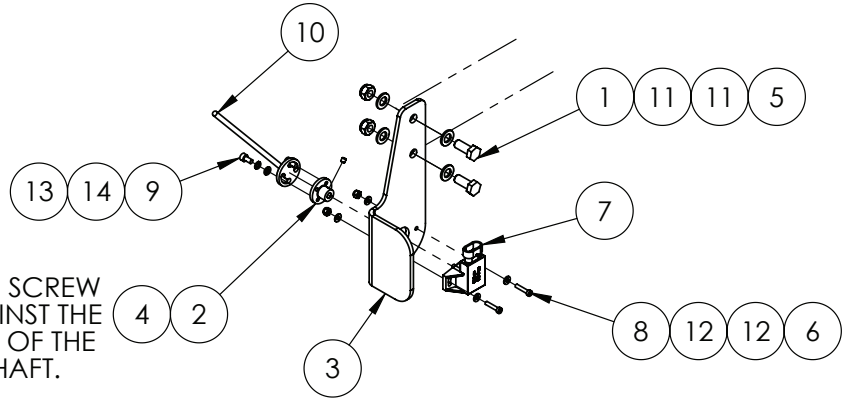

ENSURE GRUB SCREW IS FITTED AGAINST THE FLAT SECTION OF THE SENSOR "D" SHAFT.

IF DESCRIPTION PREFIX IS ASSEMBLY DRAWING ONLY OR PRODUCTION DRAWING ONLY THE ITEM IS NOT FOR SALE			
ITEM	PART NUMBER	DESCRIPTION	QTY
1	GA5006161	SET SCREW M10 X 25 GR8.8 ZP	2
2	GA4552855	BUSH, TILT SENSOR SWITCH, SP 2011	1
3	GA4537180	LIFT HEIGHT SENSOR BRACKET LYKKETRONIC	1
4	GA5069970	M5 GRUB SCREW X 5mm LONG S/S	1
5	GA5000141	NUT M10 NYLOC ZP	2
6	GA5049025	NUT M4 NYLOC SS	2
7	GA5069457	POTENTIOMETER, 120 DEGREE, ELOBAU, GATMC	1
8	GA5069375	SHCS M4 X 20 SS 304	2
9	GA5069975	SHCS M5 X 10 SS A2-70	2
10	GA4659191	TILT SENSOR ARM-PARA LIFT ARMS SP 2011	1
11	GA5000117	WASHER 10mm FLAT SS HD	4
12	GA5020510	WASHER 4mm FLAT SS	4
13	GA5003983	WASHER 5mm FLAT SS	2
14	GA5003629	WASHER 5mm SPRING SS	2
GA6101110-15 GOLDACRES	CENTRE AND PARALIFT REAR ASSEMBLY, 36M BOOM, PRAIRIE PRO, MY22		REV 01

Spray Bar, Mounting Brackets with Boom Mounting & Tilt Bolts

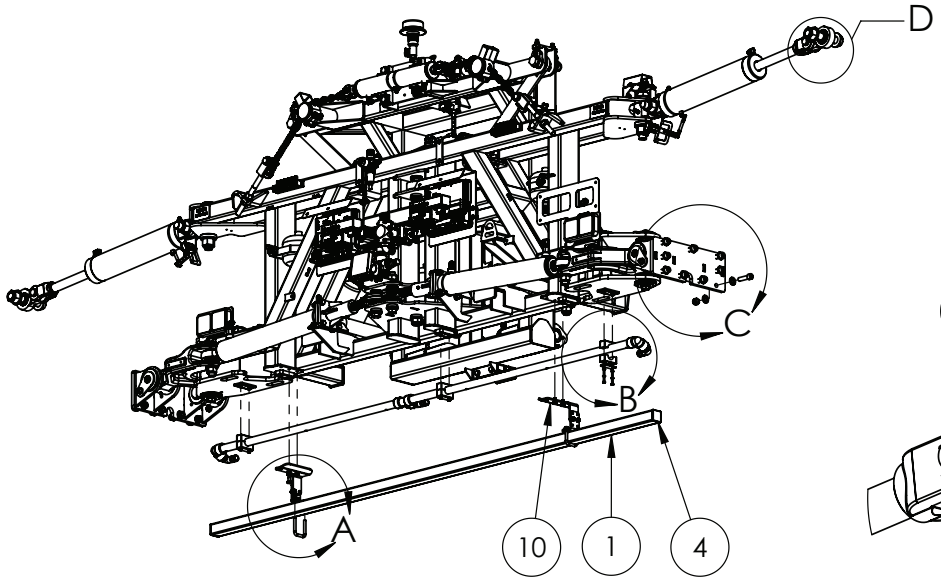

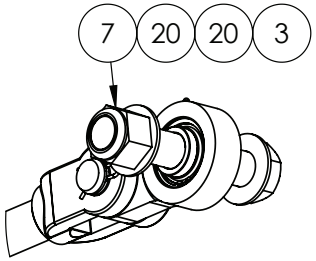

DETAIL D

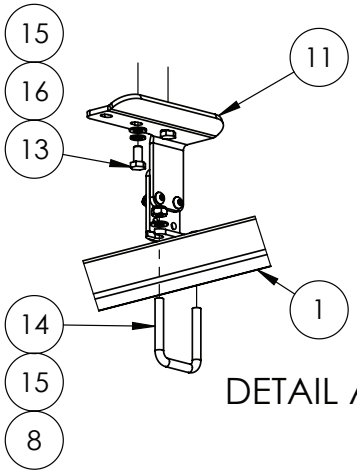

DETAIL A

DETAIL B

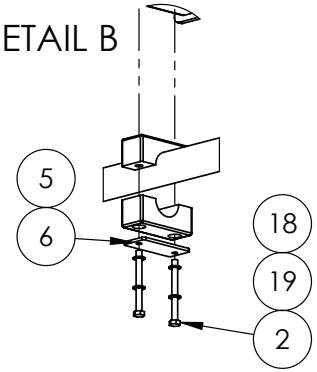

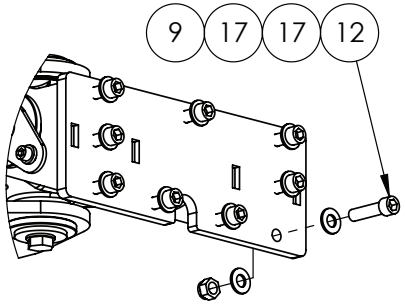

DETAIL C

IF DESCRIPTION PREFIX IS ASSEMBLY DRAWING ONLY OR PRODUCTION DRAWING ONLY THE ITEM IS NOT FOR SALE			
ITEM	PART NUMBER	DESCRIPTION	QTY
1	GA5072175	ALUMINIUM SQUARE HOLLOW EXTRUSION, 50 X 50 X 3, RADIUS EDGE, RHS, 6351 T5, 7M	2.75
2	GA5050175	BOLT M6 X 65 GR8.8 ZP	6
3	GA0500074	BOLT, 1 1/4" X 7" UNC, ZP, GR8	2
4	GA5024720	END CAP, PLASTIC, BLACK, INSERT, RHS. 50 X 50, 2.4 - 4.0mm WALL	2
5	GA3500699	MOUNTING CLAMP, SINGLE TYPE, JAW, PAIR, GROUP 5, 33.7mm, RCS-33.5J	3
6	GA5078075	MOUNTING CLAMP, SINGLE TYPE, PLATE, TOP, GROUP 5, RCS-5PT	3
7	GA0500071	NUT 1 1/4", NYLOC, ZP, UNC	2
8	GA5051445	NUT M10 NYLOC SS	4
9	GA5001029	NUT M16 NYLOC ZP	18
10	GA4909478	PRODUCTION DRAWING ONLY, NOZZLE GUARD MOUNTING, RIVX BOOM, CENTRE SECTION, LHS	1
11	GA4909477	PRODUCTION DRAWING ONLY, NOZZLE GUARD MOUNTING, RIVX BOOM, CENTRE SECTION, RHS	1
12	GA5048680	SHCS M16 X 60 GR12.9 ZP	18
13	GA5006113	SET SCREW M10 X 20 GR8.8 ZP	4
14	GA5053645	U BOLT SQUARE TOP M10 X 52 X 75	2
15	GA5000117	WASHER 10mm FLAT SS HD	8
16	GA5000137	WASHER 10mm SPRING SS	4
17	GA5001043	WASHER 16mm FLAT SS HD	36
18	GA5004437	WASHER 6mm FLAT SS	6
19	GA5004447	WASHER 6mm SPRING SS	6
20	GA0500072	WASHER, 1 1/4", FLAT, OD 66 X ID 33.3 X 5mm, ZP	4
GA6101110-17 GOLDACRES		CENTRE AND PARALIFT REAR ASSEMBLY, 36M BOOM, PRAIRIE PRO, MY22	REV 04

Centre Section, Mounting Clamps

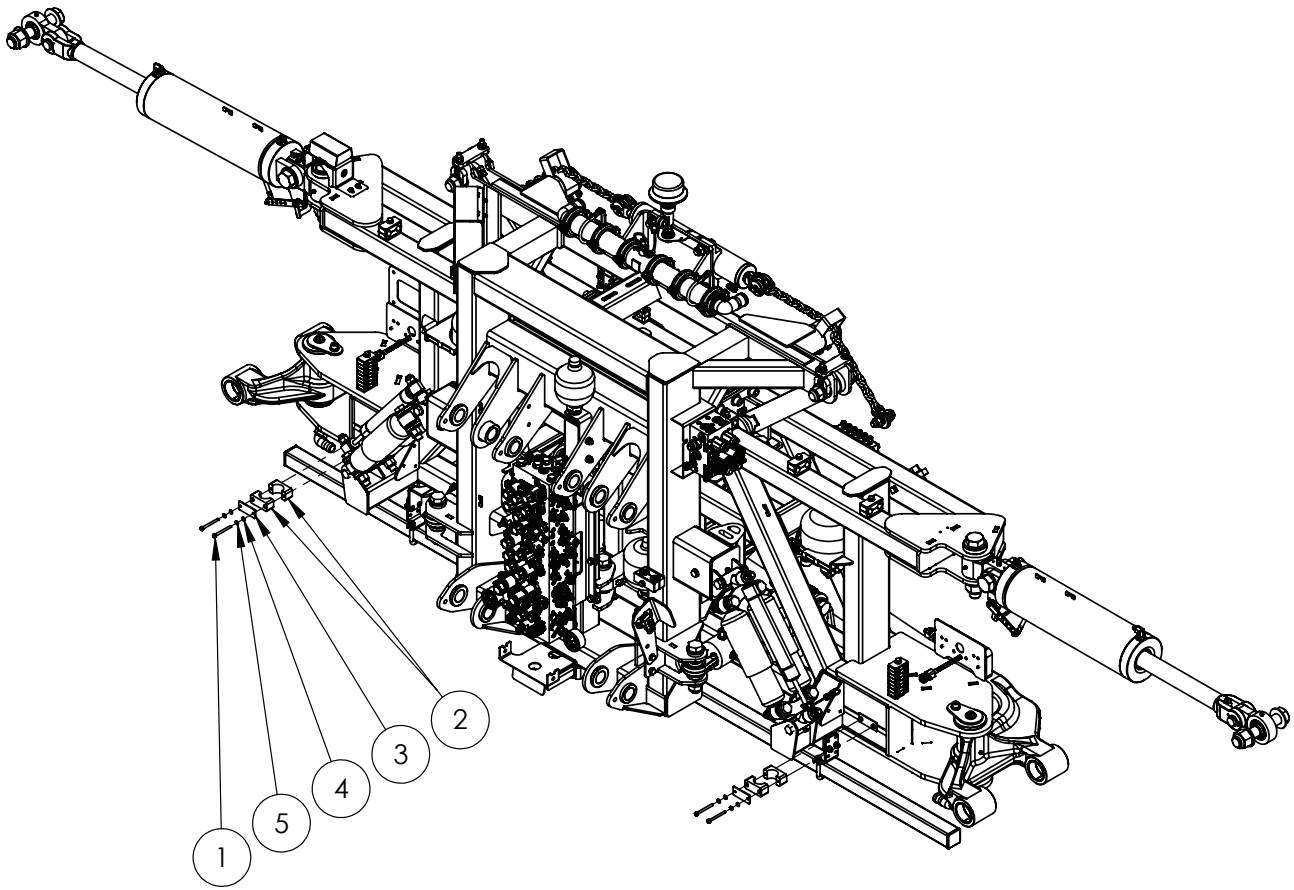

IF DESCRIPTION PREFIX IS ASSEMBLY DRAWING ONLY OR PRODUCTION DRAWING ONLY THE ITEM IS NOT FOR SALE			
ITEM	PART NUMBER	DESCRIPTION	QTY
1	GA5050175	BOLT M6 X 65 GR8.8 ZP	4
2	GA5078070	MOUNTING CLAMP, SINGLE TYPE, JAW, PAIR, GROUP 5, 38mm, RCS-38J	2
3	GA5078075	MOUNTING CLAMP, SINGLE TYPE, PLATE, TOP, GROUP 5, RCS-5PT	7
4	GA5004437	WASHER M6 FLAT SS HD	14
5	GA5004447	WASHER M6 SPRING SS	14
GA6100830-16 GOLDACRES		CENTRE AND PARALIFT REAR ASSEMBLY, 48M BOOM, CONFIGURABLE	REV 07

Cover, Centre Section Manifold, 24mt - 36mt

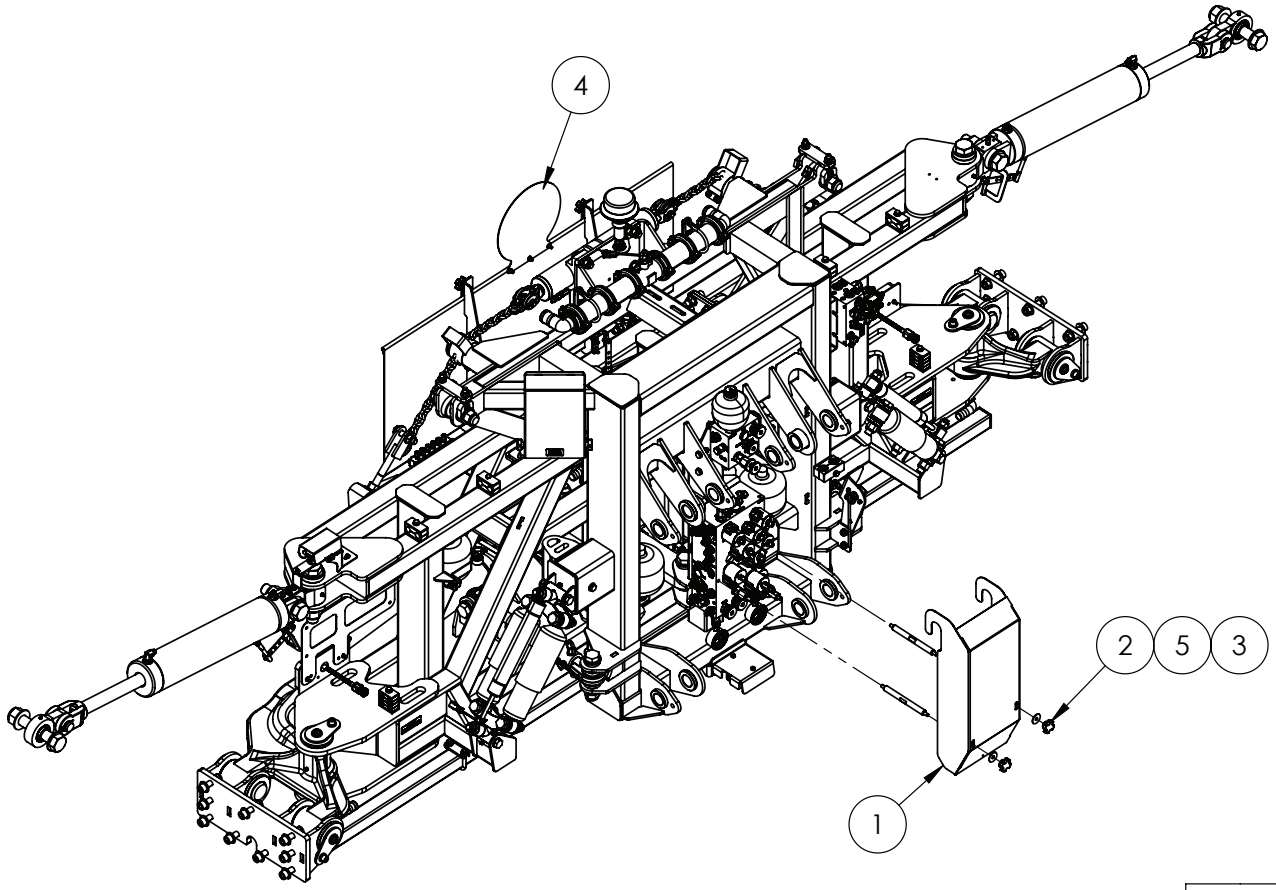

IF DESCRIPTION PREFIX IS ASSEMBLY DRAWING ONLY OR PRODUCTION DRAWING ONLY THE ITEM IS NOT FOR SALE			
ITEM	PART NUMBER	DESCRIPTION	QTY
1	GA4409050	COVER, CENTRE MANIFOLD COVER, RIVX, SUIT 36-42m	1
2	GA5069875	KNOB-STAR GRIP M8 X 40 DIA	2
3	GA4551600	LINK, CENTRE MANIFOLD COVER, SPACER ROD, RIVX, SUIT 36-42m	2
4	GA4909510	PRODUCTION DRAWING ONLY, OVER SIZE SIGN, ASSEMBLY, RIVX	1
5	GA5003645	WASHER FLAT SS 5-16 X 1 1-4	2
GA6101110-18 GOLDACRES		CENTRE AND PARALIFT REAR ASSEMBLY, CONFIGURABLE, PRAIRIE PRO, MY22	REV 01

Cover, Centre Section Manifold, 48mt

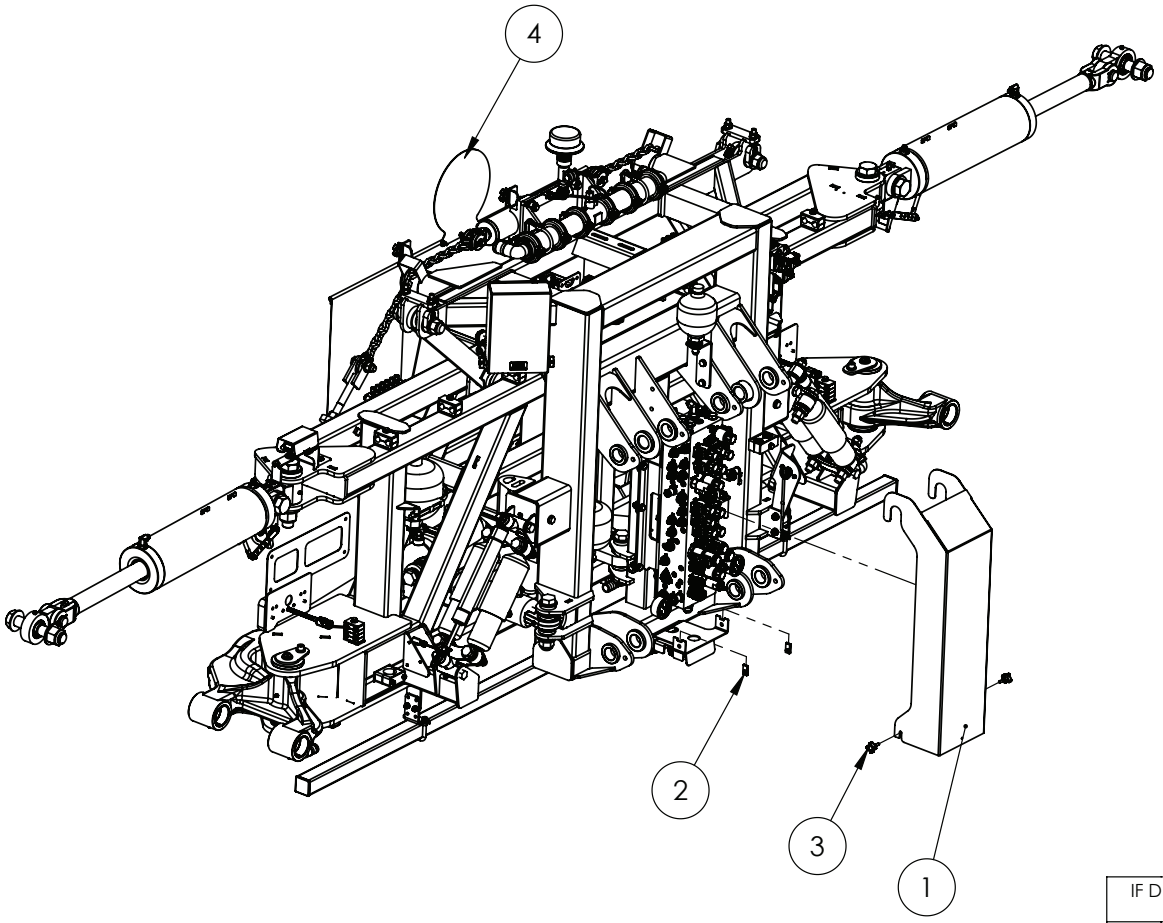

IF DESCRIPTION PREFIX IS ASSEMBLY DRAWING ONLY OR PRODUCTION DRAWING ONLY THE ITEM IS NOT FOR SALE			
ITEM	PART NUMBER	DESCRIPTION	QTY
1	GA4409120	COVER, CENTRE MANIFOLD DEFLECTOR, TRITECH MY20, SUIT 48m	1
2	GA5066830	SPEED CLIP M6	2
3	GA5069965	STAR KNOB 40 OD M6 X 20	2
4	GA4909510	PRODUCTION DRAWING ONLY, OVER SIZE SIGN, ASSEMBLY, RIVX	1
GA6100830-17 GOLDACRES		CENTRE AND PARALIFT REAR ASSEMBLY, 48M BOOM, CONFIGURABLE, G6, MY20	REV 01.A

Oversize Sign (Old)

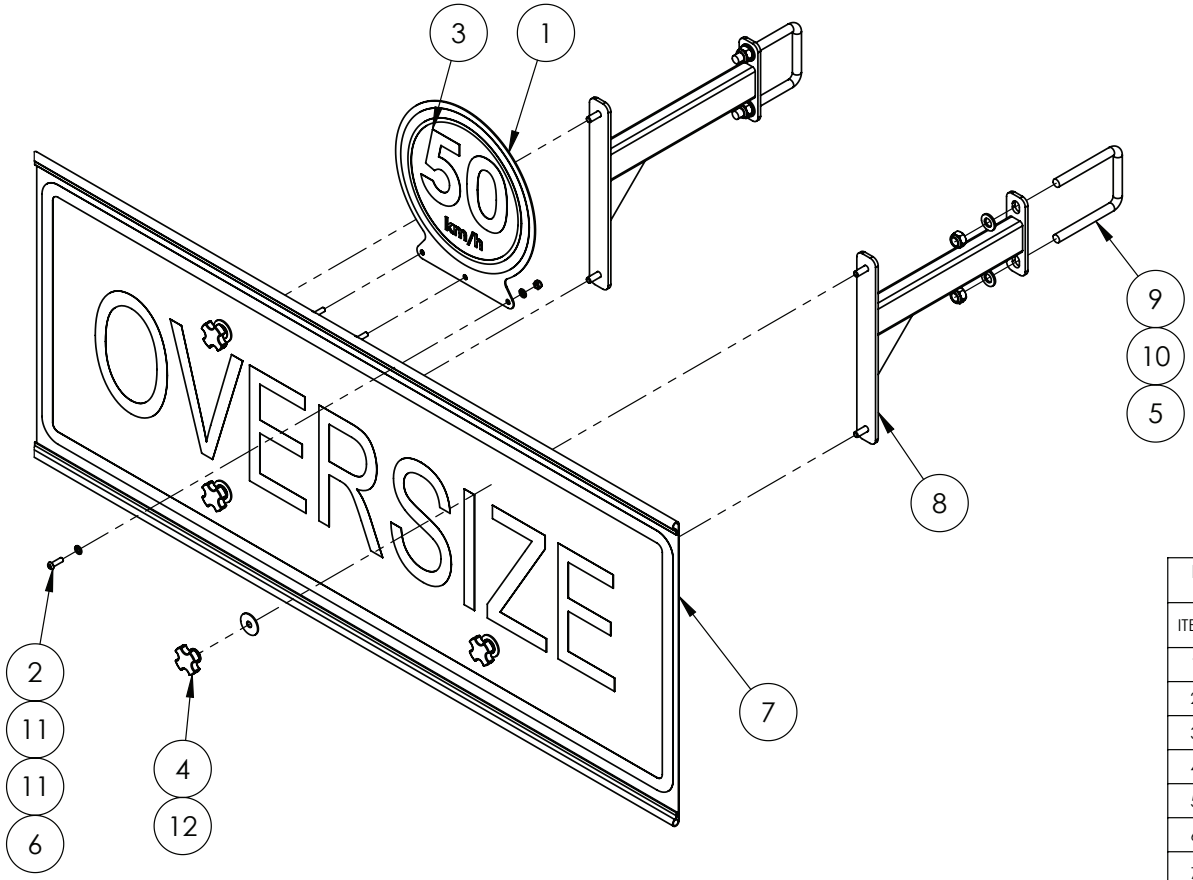

IF DESCRIPTION PREFIX IS ASSEMBLY DRAWING ONLY OR PRODUCTION DRAWING ONLY THE ITEM IS NOT FOR SALE			
ITEM	PART NUMBER	DESCRIPTION	QTY
1	F70906A	50km/H STICKER HOLDER PLATE 1.6mm SS	1
2	GA5004053	BHCS M6 X 20 SS A2-70	3
3	GA5063830	DECAL, 50km/H	1
4	GA5069875	KNOB-STAR GRIP M8 X 40 DIA	4
5	GA5012461	NUT M12 NYLOC ZP	4
6	GA5048115	NUT M6 NYLOC ZP	3
7	GA5009613	OVERSIZE SIGN, YELLOW, REFLECTIVE WITH FOLDED EDGES	1
8	GA4658150	OVERSIZE MOUNT BRACKET SUIT 2011 CENTRE	2
9	GA5011259	U BOLT SQUARE TOP M12 X 76mm X 110mm	2
10	GA5000577	WASHER 12mm FLAT SS HD	4
11	GA5004437	WASHER 6mm FLAT SS	6
12	GA5003645	WASHER FLAT SS 5-16 X 1 1-4	4
GA4949805 GOLDACRES	OVER SIZE SIGN 2020		REV 00

Oversize Sign (New)

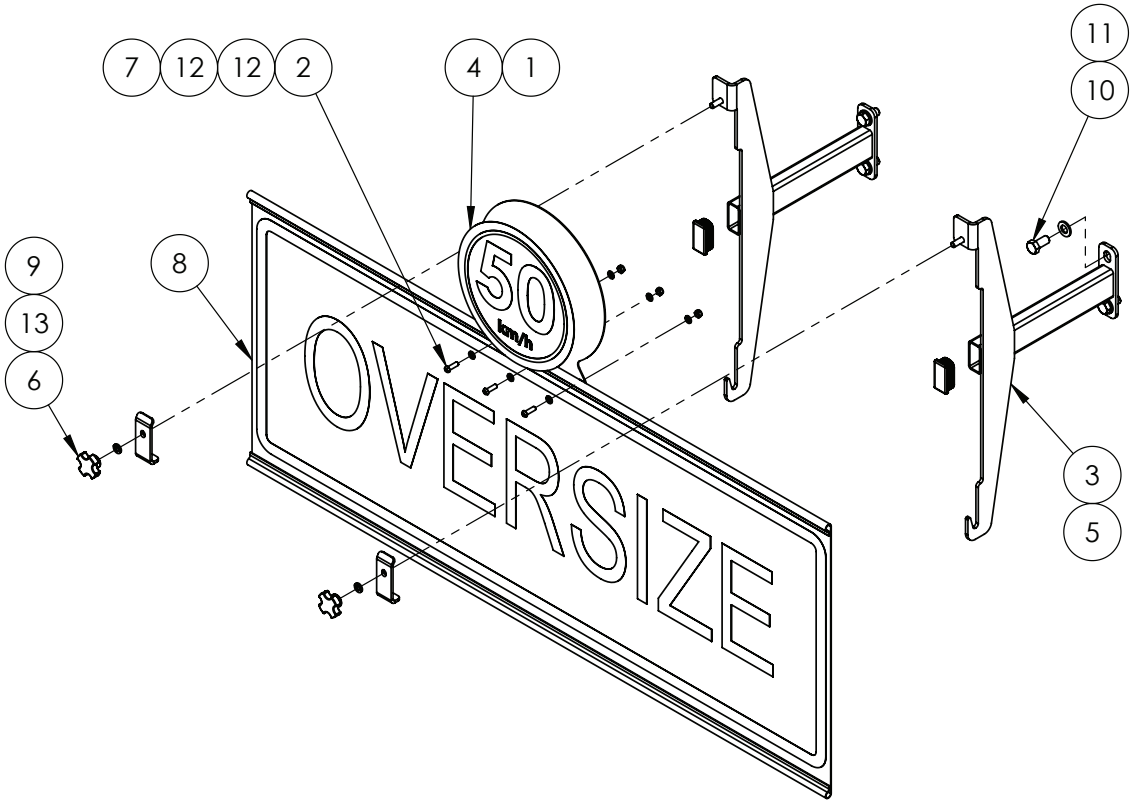

IF DESCRIPTION PREFIX IS ASSEMBLY DRAWING ONLY OR PRODUCTION DRAWING ONLY THE ITEM IS NOT FOR SALE			
ITEM	PART NUMBER	DESCRIPTION	QTY
1	F70906A	50km/H STICKER HOLDER PLATE 1.6mm SS	1
2	GA5004053	BHCS M6 X 20 SS A2-70	3
3	GA4605053	BRACKET, OVERSIZE SIGN MOUNT	2
4	GA5063830	DECAL, 50km/H	1
5	GA5003733	END CAP, 50X25 RHS	2
6	GA5069875	KNOB-STAR GRIP M8 X 40 DIA	2
7	GA5048115	NUT M6 NYLOC ZP	3
8	GA5009613	OVERSIZE SIGN, YELLOW, REFLECTIVE WITH FOLDED EDGES	1
9	GA4000255	PLATE, OVERSIZE SIGN CLAMP	2
10	GA5011229	SET SCREW M12 X 25 GR8.8 ZP	4
11	GA5000577	WASHER 12mm FLAT SS HD	4
12	GA5004437	WASHER 6mm FLAT SS	6
13	GA5004919	WASHER M8 SPRING SS	2
GA4909510 GOLDACRES	OVER SIZE SIGN 2020 PRODUCTION DRAWING ONLY, OVER SIZE SIGN, ASSEMBLY, RIVX		REV 00

12 - Boom Wings

Boom Wings, 24mt - 36mt

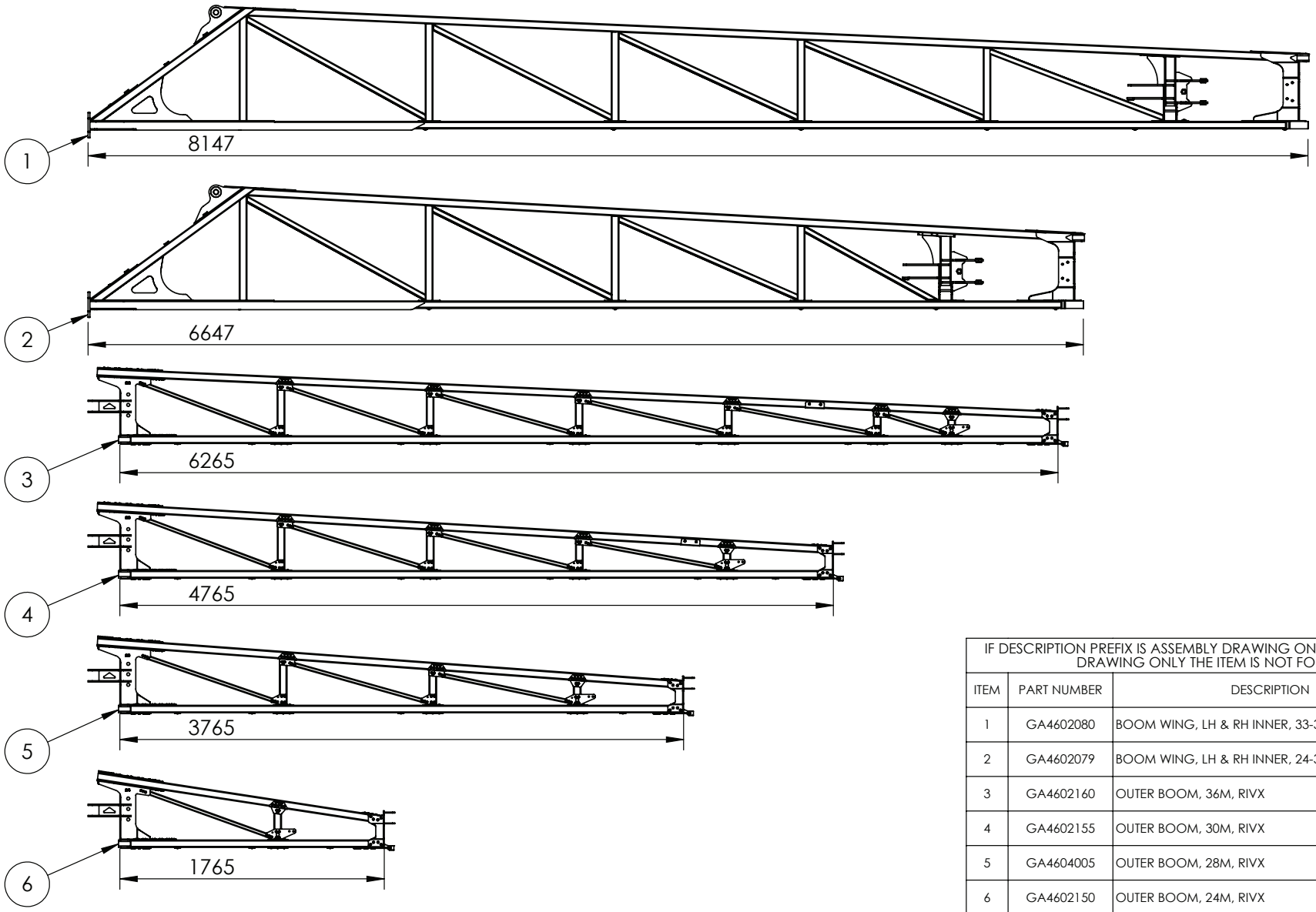

IF DESCRIPTION PREFIX IS ASSEMBLY DRAWING ONLY OR PRODUCTION DRAWING ONLY THE ITEM IS NOT FOR SALE			
ITEM	PART NUMBER	DESCRIPTION	QTY
1	GA4602080	BOOM WING, LH & RH INNER, 33-36M, RIVX	1
2	GA4602079	BOOM WING, LH & RH INNER, 24-30M, RIVX	1
3	GA4602160	OUTER BOOM, 36M, RIVX	1
4	GA4602155	OUTER BOOM, 30M, RIVX	1
5	GA4604005	OUTER BOOM, 28M, RIVX	1
6	GA4602150	OUTER BOOM, 24M, RIVX	1
GA7800086 GOLDACRES		PARTS MANUAL DRAWING, BOOMS, RIVX, PRAIRIE PRO	REV 00

Breakaways

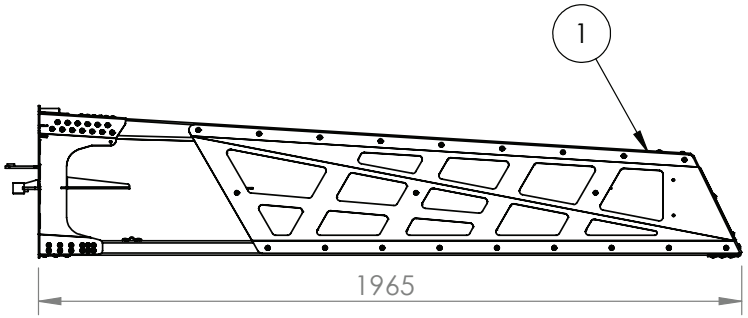

BREAKAWAY IS STANDARD FOR 24-36m BOOMS

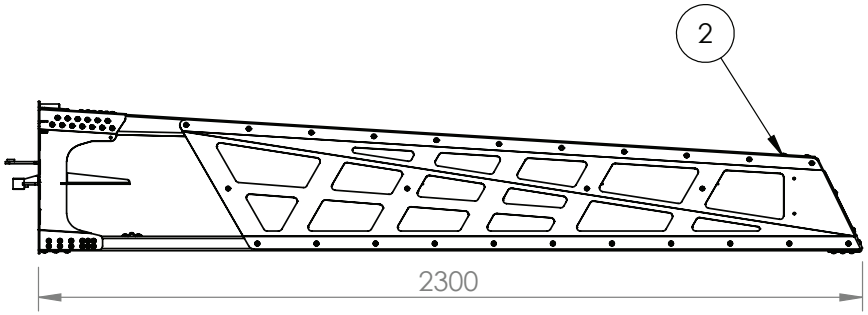

BREAKAWAY TIP IS REQUIRED FOR 10" SPACINGS 120'

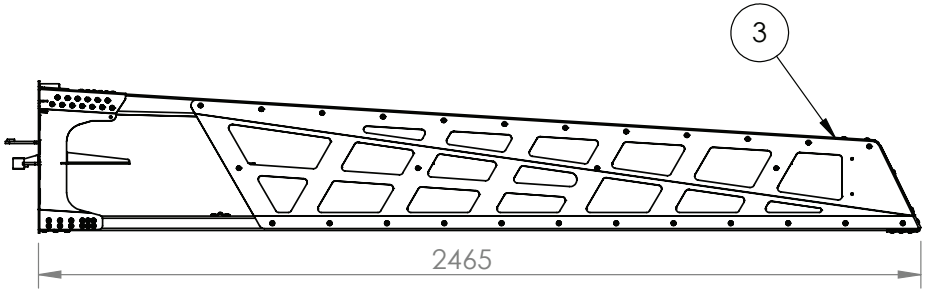

BREAKAWAY TIP IS FOR CUSTOM CONFIGURATIONS ONLY. NOT COMPATIBLE WITH BI-FOLD

IF DESCRIPTION PREFIX IS ASSEMBLY DRAWING ONLY OR PRODUCTION DRAWING ONLY THE ITEM IS NOT FOR SALE			
ITEM	PART NUMBER	DESCRIPTION	QTY
1	GA4951555	BREAKAWAY TIP ASSEMBLY 2M, BARE, RIVX, MY22	1
2	GA4951560	BREAKAWAY TIP ASSEMBLY 2.3M, BARE, RIVX, MY22	1
3	GA4951565	BREAKAWAY TIP ASSEMBLY, 2.5M BARE, RIVX, MY22	1
GA7800093 GOLDACRES		BREAKAWAY TIP ASSEMBLY 2M, BARE, TRITECH, MY22	REV 00

Boom, Breakaway Tip Assembly, 2mt

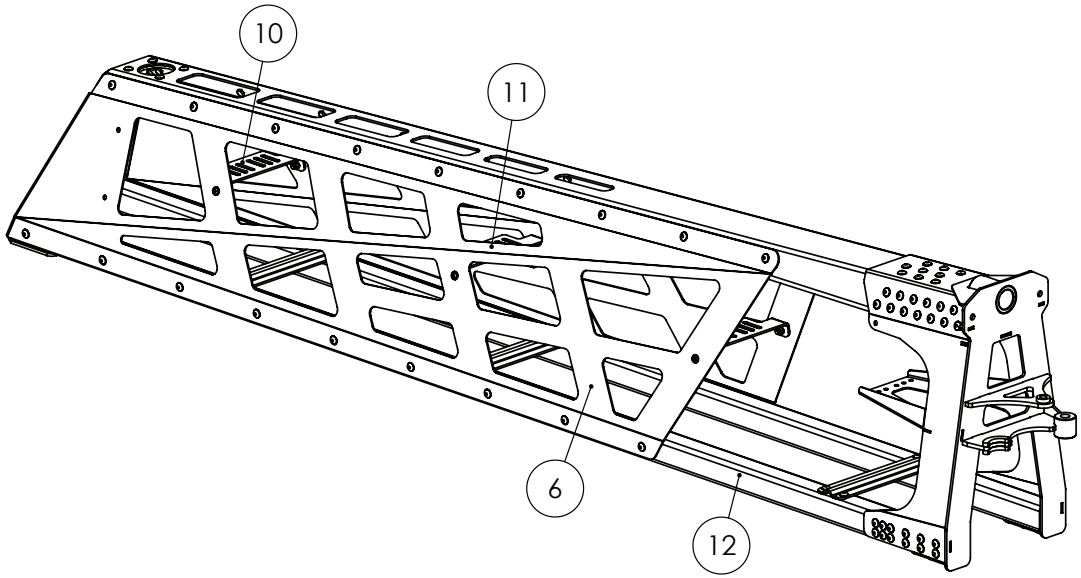

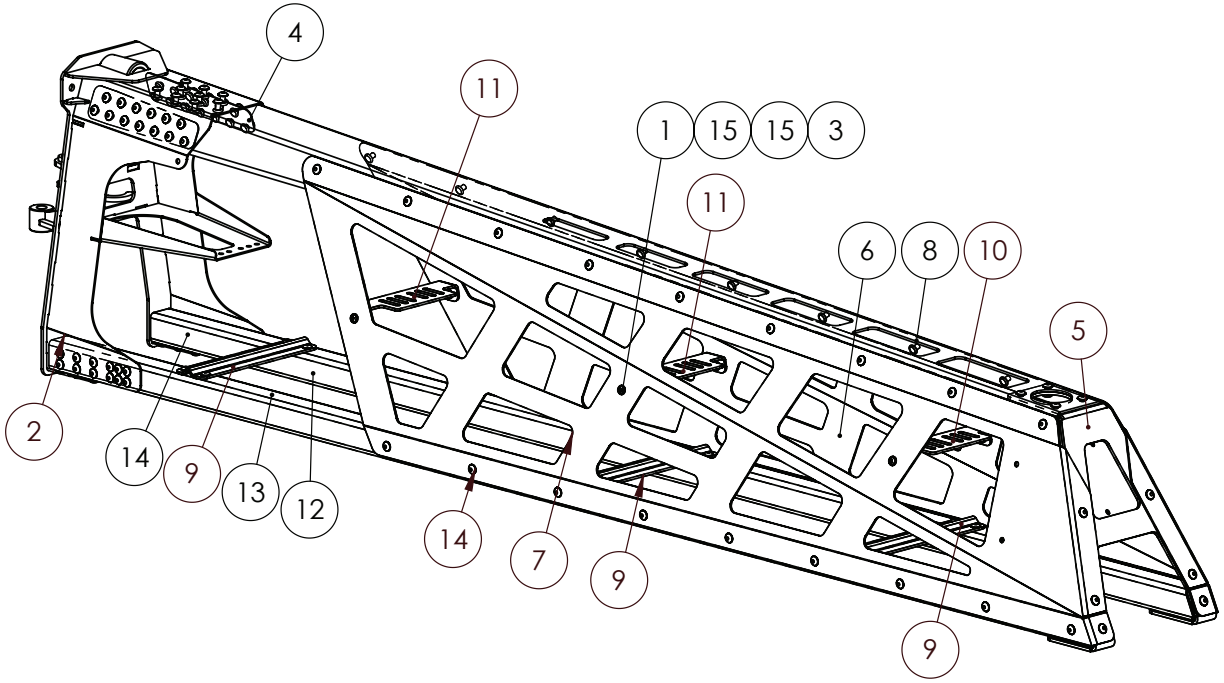

IF DESCRIPTION PREFIX IS ASSEMBLY DRAWING ONLY OR PRODUCTION DRAWING ONLY THE ITEM IS NOT FOR SALE			
ITEM	PART NUMBER	DESCRIPTION	QTY
1	GA5004050	BHCS M6 X 16 SS A2-70	6
2	GA4603980	MOUNT ASSEMBLY, BREAKAWAY TIP, TRITECH, MY22	1
3	GA5004429	NUT M6 NYLOC SS	6
4	GA4412205	PLATE, ALUMINIUM BREAKAWAY TIP, BACKING, MY22	2
5	GA4412200	PLATE, ALUMINIUM BREAKAWAY TIP, END, MY22	1
6	GA4412190	PLATE, ALUMINIUM BREAKAWAY TIP, SIDE A, MY22	1
7	GA4412185	PLATE, ALUMINIUM BREAKAWAY TIP, SIDE B, MY22	1
8	GA4412195	PLATE, ALUMINIUM BREAKAWAY TIP, TOP, 2M, MY22	1
9	GA4411275	PLATE, ALUMINIUM BREAKAWAY TIP, TRIANGLE CROSS BRACE, MY21	3
10	GA4412295	PLATE, BREAKAWAY TIP POLY MOUNT, 2m #1, MY22	1
11	GA4412290	PLATE, BREAKAWAY TIP POLY MOUNT, MY22	2
12	GA4702011	RHS ALUMINIUM, 40 X 40 X 3mm, CUT 1953mm RTD	1
13	GA4702010	RHS ALUMINIUM, 40 X 40 X 3mm, CUT 1953mm RTD	1
14	GA0500080	RIVET, 1/4" DIA, 4.7 - 11.1mm GRIP RANGE, STEEL, HUCKLOK	139
15	GA5004437	WASHER 6mm FLAT SS	10
GA4951555 GOLDACRES		BREAKAWAY TIP ASSEMBLY 2M, BARE, RIVX, MY22	REV 01.B

Boom, Breakaway Tip Assembly, 2.3mt

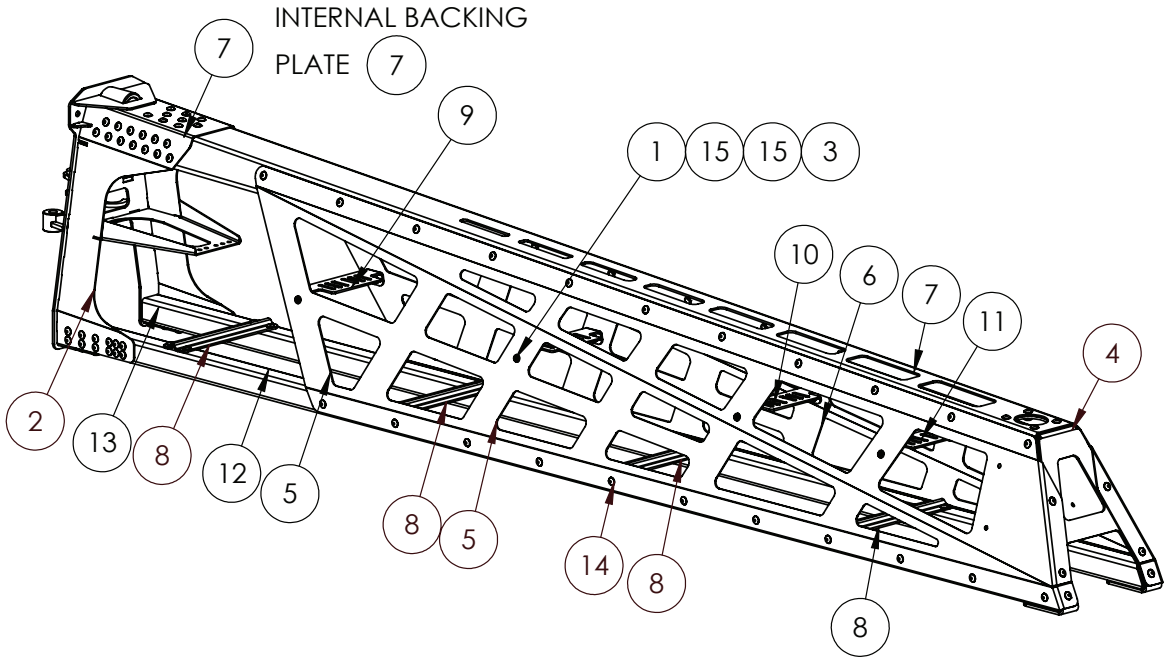

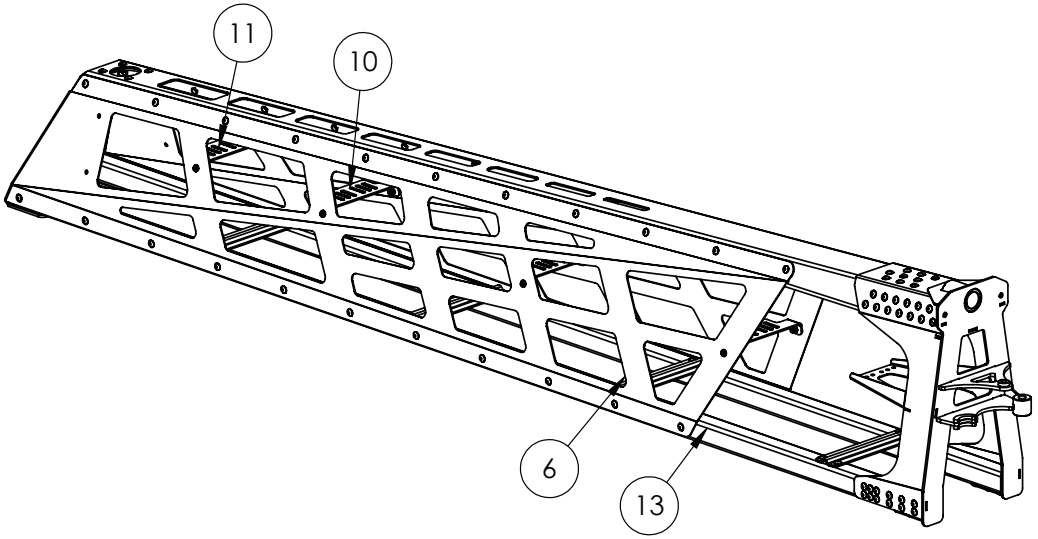

IF DESCRIPTION PREFIX IS ASSEMBLY DRAWING ONLY OR PRODUCTION DRAWING ONLY THE ITEM IS NOT FOR SALE			
ITEM	PART NUMBER	DESCRIPTION	QTY
1	GA5004050	BHCS M6 X 16 SS A2-70	8
2	GA4603980	MOUNT ASSEMBLY, BREAKAWAY TIP, TRITECH, MY22	1
3	GA5004429	NUT M6 NYLOC SS	8
4	GA4412250	PLATE, ALUMINIUM BREAKAWAY TIP, END, MY22	1
5	GA4412260	PLATE, ALUMINIUM BREAKAWAY TIP, SIDE A, MY22	1
6	GA4412265	PLATE, ALUMINIUM BREAKAWAY TIP, SIDE B, MY22	1
7	GA4412255	PLATE, ALUMINIUM BREAKAWAY TIP, TOP, MY22	1
8	GA4411275	PLATE, ALUMINIUM BREAKAWAY TIP, TRIANGLE CROSS BRACE, MY21	4
9	GA4412290	PLATE, BREAKAWAY TIP POLY MOUNT, MY22	2
10	GA4412305	PLATE, BREAKAWAY TIP POLY MOUNT, MIDDLE, MY22	1
11	GA4412300	PLATE, BREAKAWAY TIP POLY MOUNT, OUTER, MY22	1
12	GA4702995	RHS AL, 40X40X3, CUT 2287, RTD	1
13	GA4702990	RHS AL, 40X40X3, CUT 2287, RTD	1
14	GA0500080	RIVET, 1/4" DIA, 4.7 - 11.1mm GRIP RANGE, STEEL, HUCKLOK	151
15	GA5004437	WASHER 6mm FLAT SS	14
GA4951560 GOLDACRES		BREAKAWAY TIP ASSEMBLY 2.3M, BARE, TRITECH, MY22	REV 01

Boom, Breakaway Tip Assembly, 2.5mt

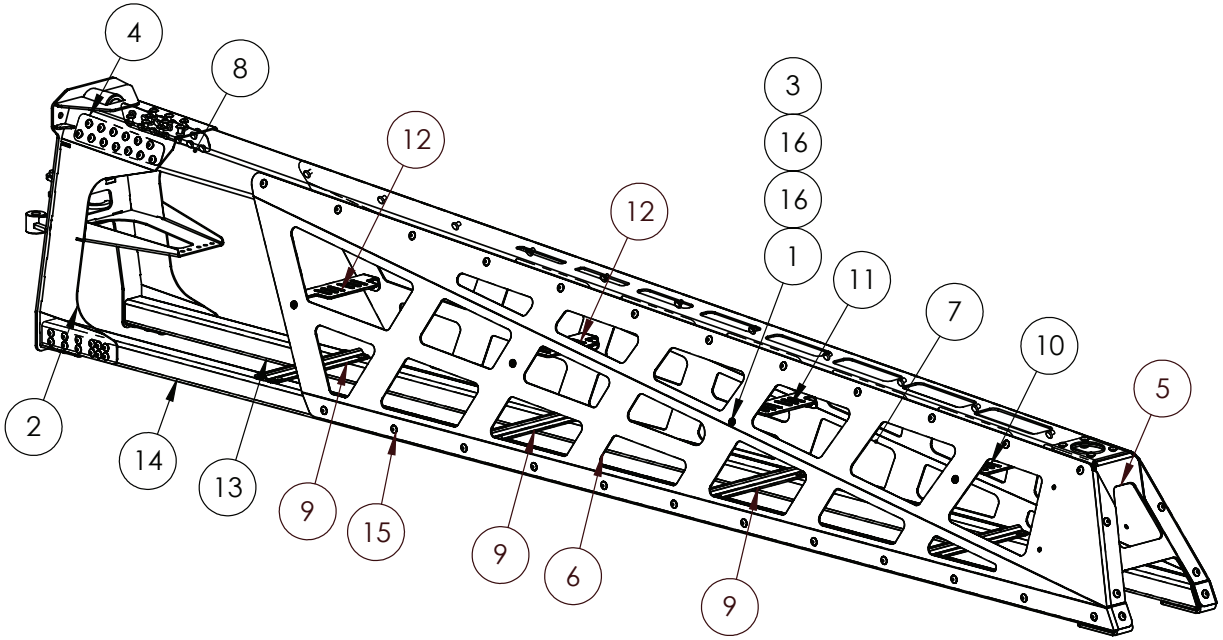

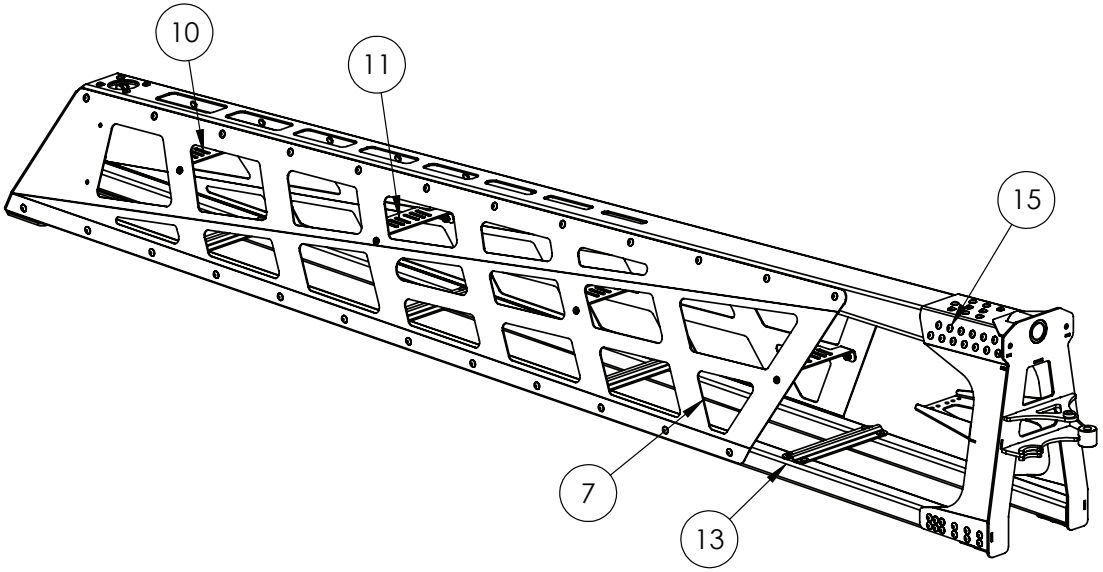

IF DESCRIPTION PREFIX IS ASSEMBLY DRAWING ONLY OR PRODUCTION DRAWING ONLY THE ITEM IS NOT FOR SALE			
ITEM	PART NUMBER	DESCRIPTION	QTY
1	GA5004050	BHCS M6 X 16 SS A2-70	8
2	GA4603980	MOUNT ASSEMBLY, BREAKAWAY TIP, TRITECH, MY22	1
3	GA5004429	NUT M6 NYLOC SS	8
4	GA4412205	PLATE, ALUMINIUM BREAKAWAY TIP, BACKING, MY22	2
5	GA4412270	PLATE, ALUMINIUM BREAKAWAY TIP, END, MY22	1
6	GA4412280	PLATE, ALUMINIUM BREAKAWAY TIP, SIDE A, MY22	1
7	GA4412285	PLATE, ALUMINIUM BREAKAWAY TIP, SIDE B, MY22	1
8	GA4412275	PLATE, ALUMINIUM BREAKAWAY TIP, TOP, MY22	1
9	GA4411275	PLATE, ALUMINIUM BREAKAWAY TIP, TRIANGLE CROSS BRACE, MY21	4
10	GA4412315	PLATE, BREAKAWAY TIP POLY MOUNT, MY22	1
11	GA4412310	PLATE, BREAKAWAY TIP POLY MOUNT, MY22	1
12	GA4412290	PLATE, BREAKAWAY TIP POLY MOUNT, MY22	2
13	GA4702700	RHS AL, 50X50X3, CUT 2423, RTD	1
14	GA4702705	RHS AL, 50X50X3, CUT 2423, RTD	1
15	GA0500080	RIVET, 1/4" DIA, 4.7 - 11.1mm GRIP RANGE, STEEL, HUCKLOK	155
16	GA5004437	WASHER 6mm FLAT SS	14
GA4951565 GOLDACRES		BREAKAWAY TIP ASSEMBLY, 2.5M BARE, TRITECH, MY22	REV 01

Breakaway, Plumbing Mounting Clamps & LED Lights

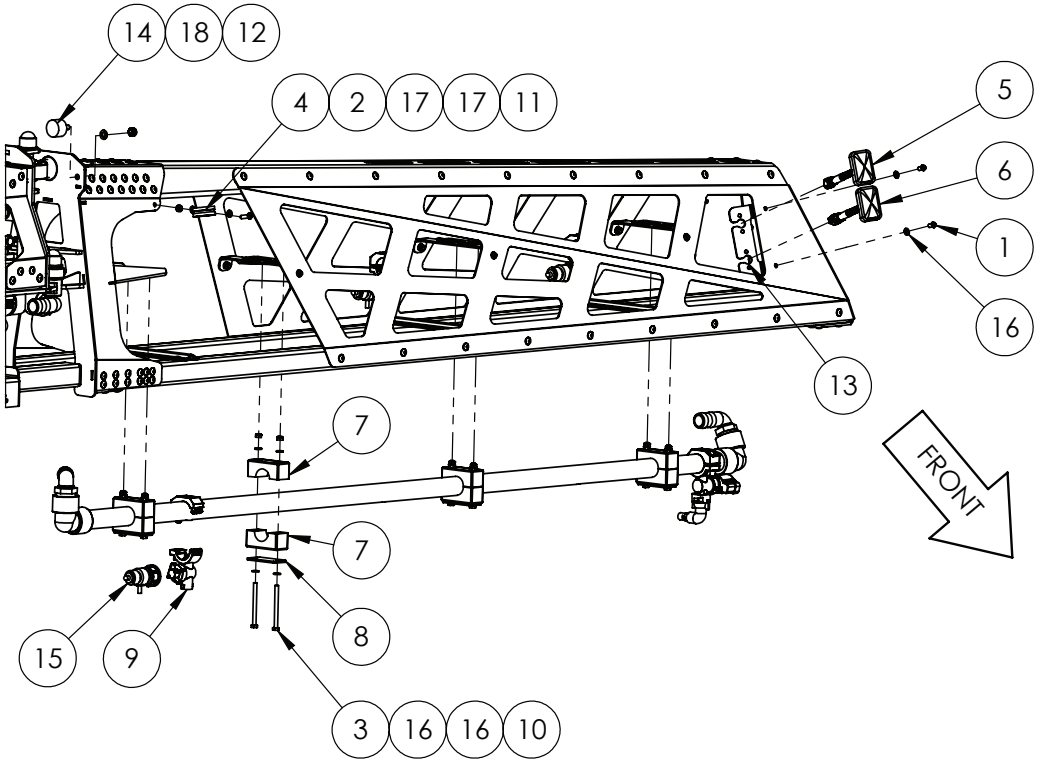

IF DESCRIPTION PREFIX IS ASSEMBLY DRAWING ONLY OR PRODUCTION DRAWING ONLY THE ITEM IS NOT FOR SALE			
ITEM	PART NUMBER	DESCRIPTION	QTY
1	GA5004023	BHCS M6 X 10 SS A2-70	2
2	GA5004053	BHCS M6 X 20 SS A2-70	1
3	GA0500115	BOLT M6 X 75 SS A2-70	8
4	GA5048090	CLAMP P 35mm 56487	1
5	GA3000267	LIGHT, LED, ORANGE, CLEARANCE, DEUTSCH CONNECTOR	1
6	GA3000266	LIGHT, LED, RED, FENCE, DEUTSCH CONNECTOR	1
7	GA3500699	MOUNTING CLAMP, SINGLE TYPE, JAW, PAIR, GROUP 5, 33.7mm, RCS-33.5J	4
8	GA5078075	MOUNTING CLAMP, SINGLE TYPE, PLATE, TOP, GROUP 5, RCS-5PT	4
9	GA5077962	NOZZLE BODY, SINGLE, 1", TEEJET, QJ17560A-1-NYB	3
10	GA5004429	NUT M6 NYLOC SS	8
11	GA5004429	NUT M6 NYLOC SS	1
12	GA5052590	NUT M8 NYLOC SS	2
13	GA4405610	PLATE, ALUMINIUM BREAKAWAY TIP, LED MOUNT, MY20	1
14	GA5014613	RUBBER BUFFER DIA 30 HT 20	2
15	GA5065520	SPRAY STOP, RAPIDFIRE, SUIT TEEJET NOZZLE BODY, ALTEK	3
16	GA5004437	WASHER 6mm FLAT SS	18
17	GA5004437	WASHER M6 FLAT SS HD	2
18	GA5003651	WASHER M8 FLAT SS	2
GA4950700-06 GOLDACRES		ASSEMBLY DRAWING ONLY. BOOM BREAKAWAY ASSEMBLY, 24M LH, RIVX SERIES 2 MY21	REV 02.A

Boom, 24mt - 30mt, Bi-Fold Assembly, RIVX

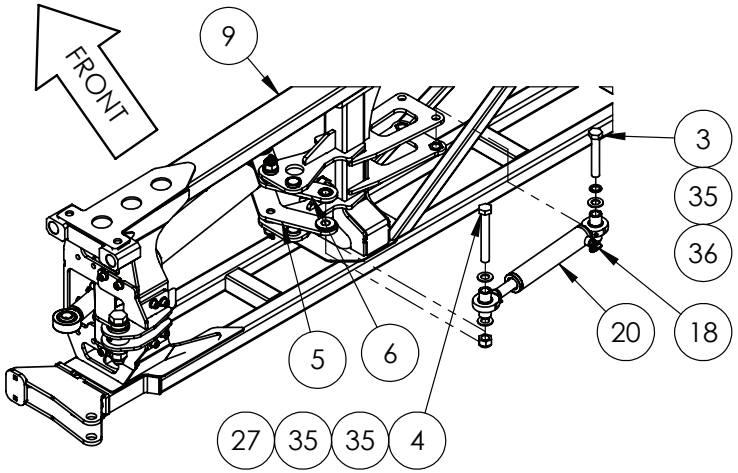

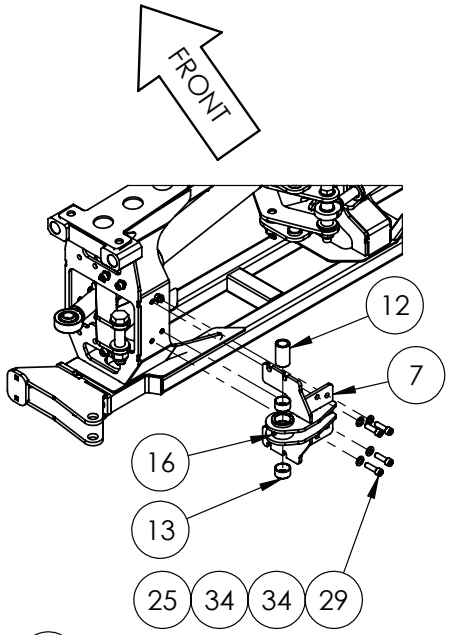

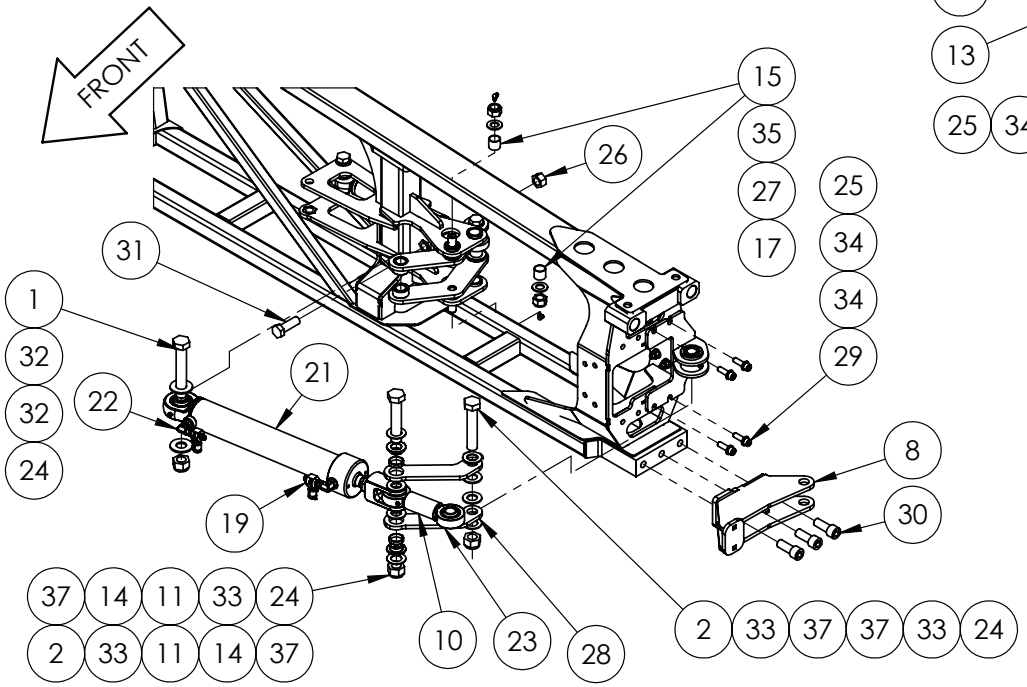

IF DESCRIPTION PREFIX IS ASSEMBLY DRAWING ONLY OR PRODUCTION DRAWING ONLY THE ITEM IS NOT FOR SALE

ITEM	PART NUMBER	DESCRIPTION	QTY
1	GA5006033	BOLT 1" UNC X 6" ZP	1
2	GA5006031	BOLT 1" X 5" UNC GR8 ZP	2
3	GA5048110	BOLT M20 X 120 GR8.8 ZP	1
4	GA5001531	BOLT M20 X 150 GR8.8 ZP	1
5	GA4602215	BOOM BI-FOLD BREAKAWAY LINK A, TRITECH MY20	1
6	GA4602220	BOOM BI-FOLD BREAKAWAY LINK B, TRITECH MY20	1
7	GA4602175	BOOM BI-FOLD LINKAGE MOUNT, TRITECH, MY20	1
8	GA4602140	BOOM HINGE MOUNT, BOLT ON, LOWER, TRITECH, MY19	1
9	GA4602079	BOOM WING, LH & RH INNER, 24-30M, RIVX	1
10	GA4551290	BUSH, BI-FOLD ADJUSTER LINK, 1 1/4"UNF X 90mm LONG, MY20 BOOM	1
11	GA4551535	BUSH, BOOM LINKAGE PIVOT, TRITECH S	2
12	GA4550210	BUSH, FOLD LINK BOOM END, TRITECH BOOM 2015	1
13	GA5055650	GLACIER BUSH, ID 35 X OD 39 X 20 LONG	2
14	GA5078612	GLACIER BUSH, 36mm OD X 32mm ID X 9mm LONG	2
15	GA5065487	GLACIER BUSH, 1" ID, 1.125" OD, 1" LONG	2
16	GA5012203	GREASE NIPPLE, SHORT, 1/4 UNF, MACH0207	1
17	GA5051970	GREASE NIPPLE, 6mm, 90 DEG	2
18	GA3500716	HYDRAULIC ADAPTOR ELBOW, 9/16" UNO TO 9/16" JIC, 90 DEG, S91-0909	1
19	GA3501090	HYDRAULIC ADAPTOR, 9/16" JIC FEMALE SWIVEL X 9/16" JIC MALE X TEST POINT, S159-090916	2
20	GA3500683	HYDRAULIC CYLINDER, 1 1/2" BORE, 1" ROD BI-FOLD BREAKAWAY, TRITECH, MY20	
21	GA3500681	HYDRAULIC CYLINDER, 2.5" BORE, 1 1/4" ROD, 350mm STROKE, 50mm CUSHION, BI-FOLD, TRITECH, MY20	1
22	GA3500700	HYDRAULIC ADAPTOR, ELBOW, 90 DEGREE, 9/16" JIC MALE X 3/4" UN MALE O-RING, S91-0912	2
23	GA5070530	LARGE ROSE END 1" X 1 1/4" UNF BB074-VM16	2
24	GA5012439	NUT 1" NYLOC UNC ZP	3
25	GA5012461	NUT M12 NYLOC ZP	8
26	GA5001709	NUT M20 COARSE ZP	1
27	GA5048125	NUT M20 NYLOC COARSE ZP	3
28	GA4404865	PLATE, BOOM BI-FOLD MECHANISM, TRITECH, MY20	2
29	GA5000321	SHCS M12 X 40 GR12.9 ZP	8
30	GA0500028	SHCS, M20 X 50, ZP GR12.9	3
31	GA5001557	SET SCREW M20 X 60 ZP GR8.8	1
32	GA5017659	WASHER 1 FLAT ZP HD (5mm THICK)	2
33	GA5001893	WASHER 1" X 1 7/8" FLAT ZP	4
34	GA5000577	WASHER 12mm FLAT SS HD	16
35	GA5001741	WASHER 20mm FLAT SS HD	5
36	GA5001721	WASHER 20mm SPRING SS	1
37	GA0500078	WASHER, 1" ID X 1 7/8" OD X 1/8" THICK, NYLON	4
GA4951540 GOLDACRES	ASSEMBLY DRAWING ONLY. BOOM BI FOLD ASSEMBLY, 30M LH, RIVX SERIES 2 MY21		REV 03

Boom, 36mt, Bi-Fold Assembly, RIVX

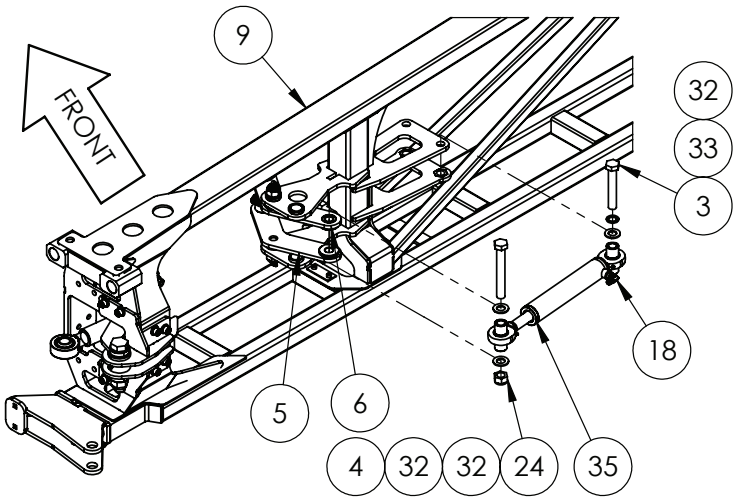

ITEM 9	INNER BOOM RIVX
GA4602079	24-30 M
GA4602080	36 M
GA4602170	42 M

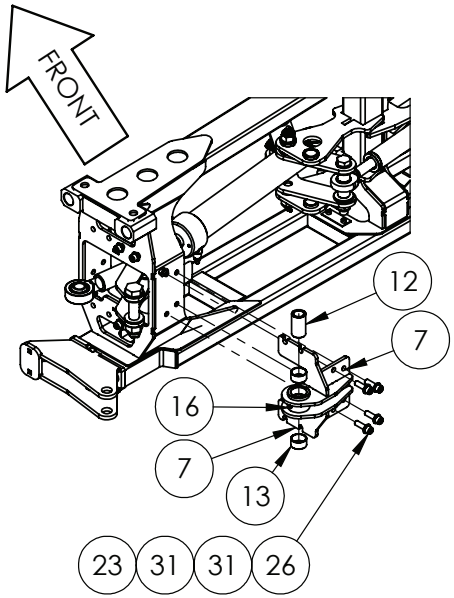

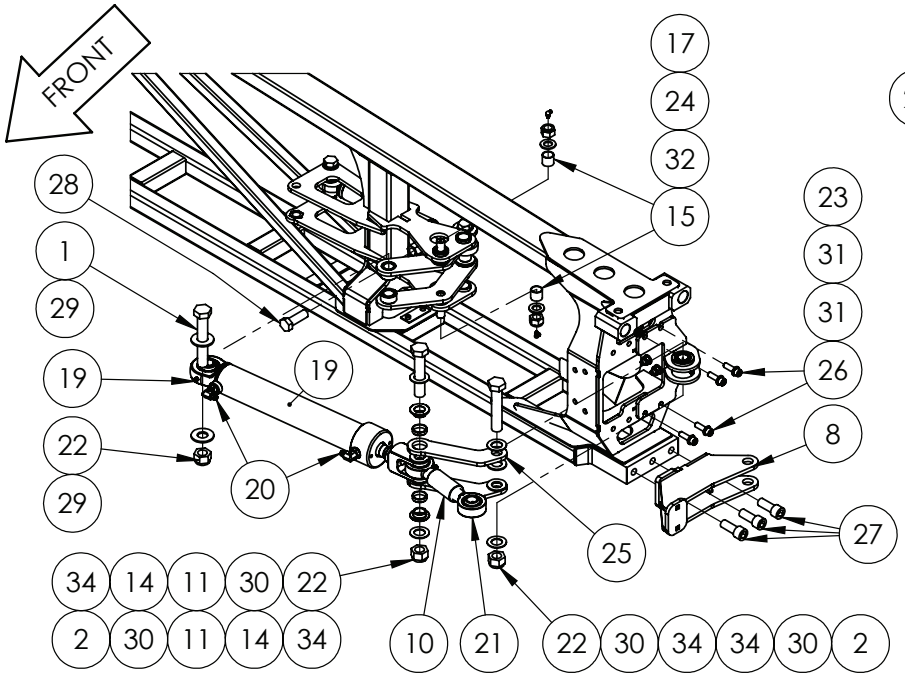

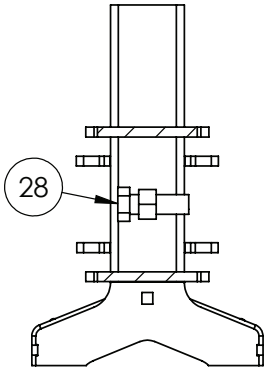

STOPPER BOLT LOCATION

IF DESCRIPTION PREFIX IS ASSEMBLY DRAWING ONLY OR PRODUCTION DRAWING ONLY THE ITEM IS NOT FOR SALE

ITEM	PART NUMBER	DESCRIPTION	QTY.
1	GA5006033	BOLT 1" UNC X 6" ZP	1
2	GA5006031	BOLT 1" X 5" UNC GR8 ZP	2
3	GA5048110	BOLT M20 X 120 GR8.8 ZP	1
4	GA5001531	BOLT M20 X 150 GR8.8 ZP	1
5	GA4602215	BOOM BI-FOLD BREAKAWAY LINK A, TRITECH MY20	1
6	GA4602220	BOOM BI-FOLD BREAKAWAY LINK B, TRITECH MY20	1
7	GA4602175	BOOM BI-FOLD LINKAGE MOUNT, TRITECH, MY20	1
8	GA4602140	BOOM HINGE MOUNT, BOLT ON, LOWER, TRITECH, MY19	1
9	GA4602080	BOOM WING, LH & RH INNER, 33-36M, RIVX	1
10	GA4551290	BUSH, BI-FOLD ADJUSTER LINK, 1 1/4"UNF X 90mm LONG, MY20 BOOM	1
11	GA4551535	BUSH, BOOM LINKAGE PIVOT, TRITECH S	2
12	GA4550210	BUSH, FOLD LINK BOOM END, TRITECH BOOM 2015	1
13	GA5055650	GLACIER BUSH, ID 35 X OD 39 X 20 LONG	2
14	GA5078612	GLACIER BUSH, 36mm OD X 32mm ID X 9mm LONG	2
15	GA5065487	GLACIER BUSH, 1" ID, 1.125" OD, 1" LONG	2
16	GA5012203	GREASE NIPPLE, SHORT, 1/4 UNF, MACH0207	1
17	GA5051970	GREASE NIPPLE, 6mm, 90 DEG	2
18	GA3500716	HYDRAULIC ADAPTOR ELBOW, 9/16" UNO TO 9/16" JIC, 90 DEG, S91-0909	1
19	GA3500681	HYDRAULIC CYLINDER, 2.5" BORE, 1 1/4" ROD, 350mm STROKE, 50mm CUSHION, BI-FOLD, TRITECH, MY20	1
20	GA3500700	HYDRAULIC ADAPTOR, ELBOW, 90 DEGREE, 9/16" JIC MALE X 3/4" UN MALE O-RING, S91-0912	2
21	GA5070530	LARGE ROSE END 1" X 1 1/4" UNF BB074-VM16	2
22	GA5012439	NUT 1" NYLOC UNC ZP	3
23	GA5012461	NUT M12 NYLOC ZP	8
24	GA5048125	NUT M20 NYLOC COARSE ZP	3
25	GA4404865	PLATE, BOOM BI-FOLD MECHANISM, TRITECH, MY20	2
26	GA5000321	SHCS M12 X 40 GR12.9 ZP	8
27	GA0500028	SHCS, M20 X 50, ZP GR12.9	3
28	GA5001557	SET SCREW M20 X 60 ZP GR8.8	1
29	GA5017659	WASHER 1 FLAT ZP HD (5mm THICK)	2
30	GA5001893	WASHER 1" X 1 7/8" FLAT ZP	4
31	GA5000577	WASHER 12mm FLAT SS HD	16
32	GA5001741	WASHER 20mm FLAT SS HD	5
33	GA5001721	WASHER 20mm SPRING SS	1
34	GA0500078	WASHER, 1" ID X 1 7/8" OD X 1/8" THICK, NYLON	4
35	GA3500683	HYDRAULIC CYLINDER, 1 1/2" BORE, 1" ROD, 182mm STROKE, BI-FOLD BREAKAWAY, TRITECH, MY20	1
GA4950720-01 GOLDACRES		ASSEMBLY DRAWING ONLY, BOOM BI FOLD ASSEMBLY, 36M LH, RIVX, SERIES 2 MY21	REV 05

Recirculation Poly, 24mt - 30mt & Hydraulic Boom Line Tubing

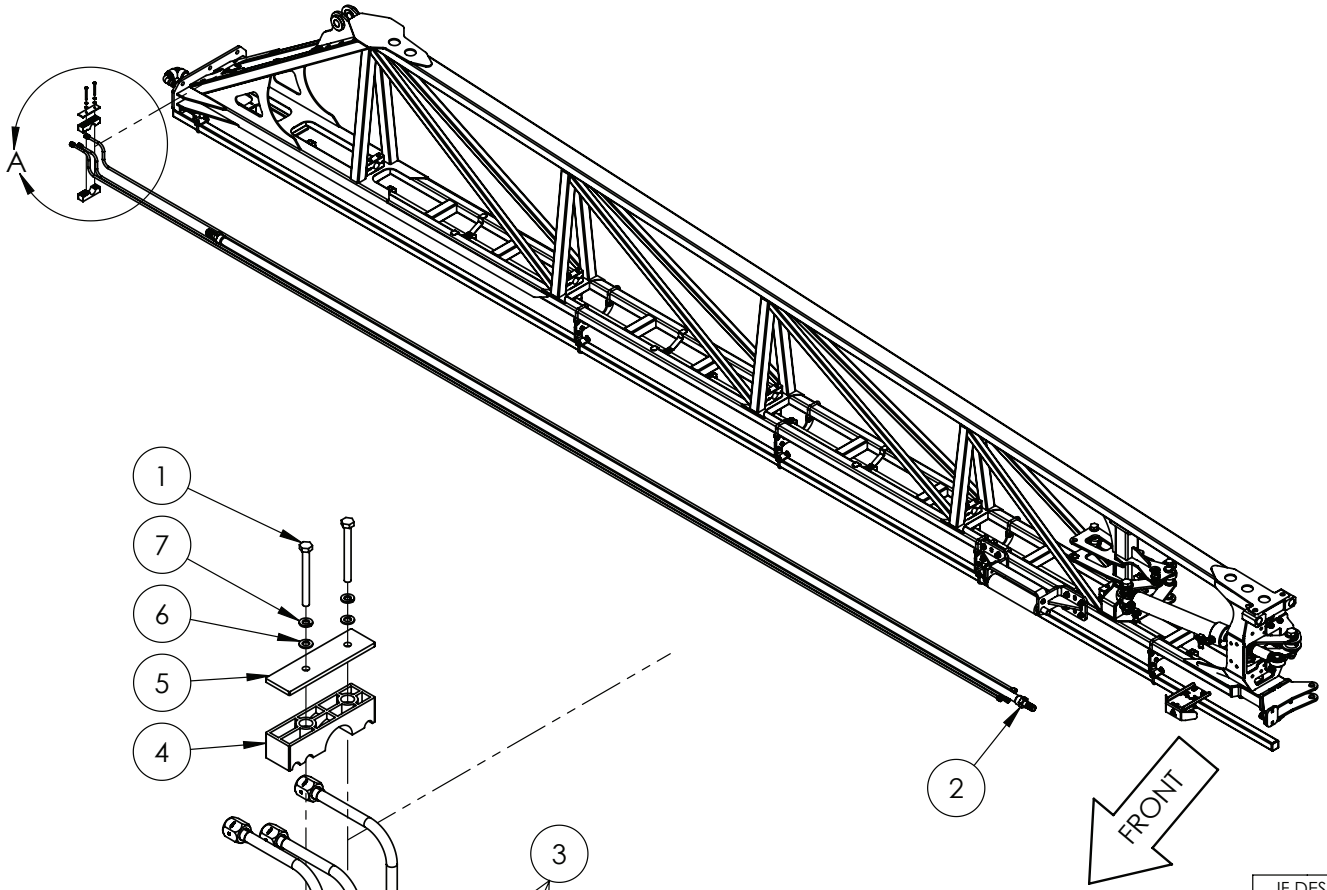

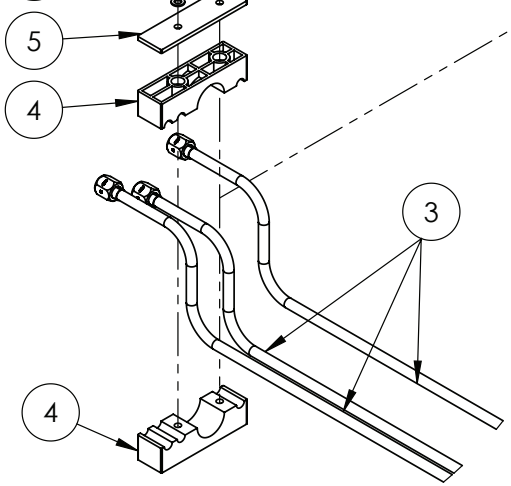

DETAIL A

IF DESCRIPTION PREFIX IS ASSEMBLY DRAWING ONLY OR PRODUCTION DRAWING ONLY THE ITEM IS NOT FOR SALE			
ITEM	PART NUMBER	DESCRIPTION	QTY
1	GA0500085	BOLT M6 X 60 SS	12
2	GA5077747	HOSE BARB, STRAIGHT, 1 FEMALE THREAD X 1 HOSE, BANJO, HBF100	1
3	GA3500695	HYDRAULIC TUBE, 3/8" TUBE, 9/16" JIC FEMALE ENDS, BOOM SECTION A, TRITECH, MY20	3
4	GA3500707	MOUNTING CLAMP, JAW, SINGLE, GROUP 5, 33.7mm CENTRE WITH 3 X 10mm	12
5	GA4406140	PLATE, BOOM PLUMBING AND HYDRAULIC LINE CLAMP, TOP PLATE	6
6	GA5004437	WASHER 6mm FLAT SS	12
7	GA5004447	WASHER M6 SPRING SS	12
GA4951435 GOLDACRES	ASSEMBLY DRAWING ONLY, BOOM INNER ASSEMBLY, 24-30M, LH, RIVX SERIES 2 MY21		REV 03

Nudge Bar, Inner, 24mt - 30mt, RIVX

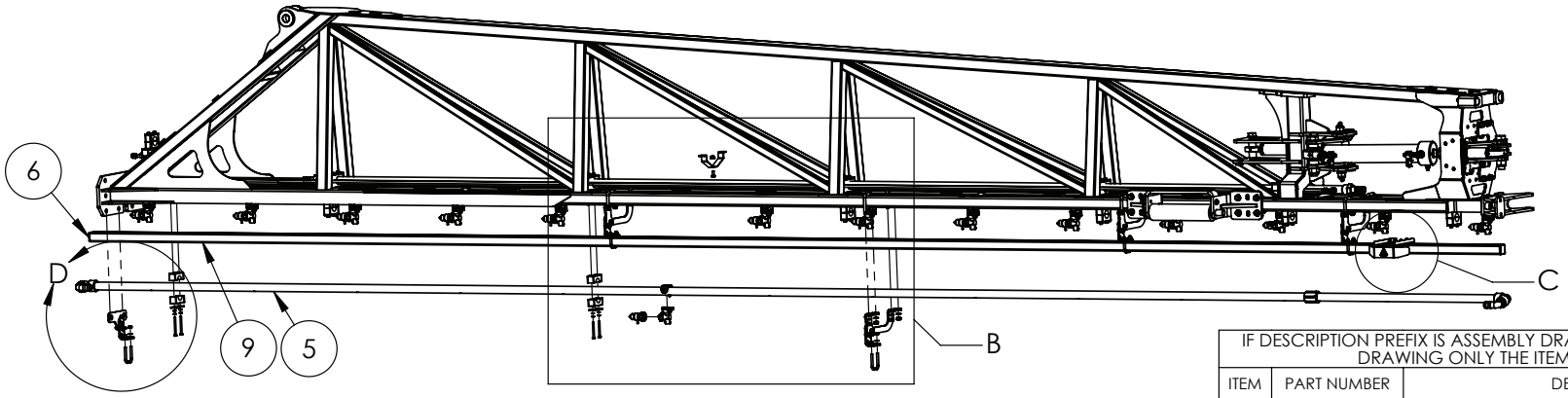

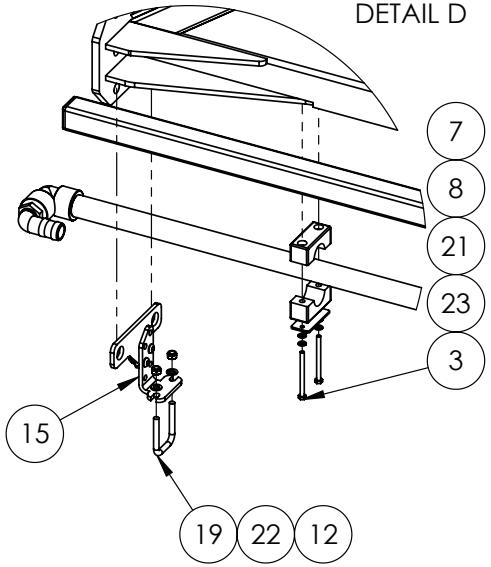

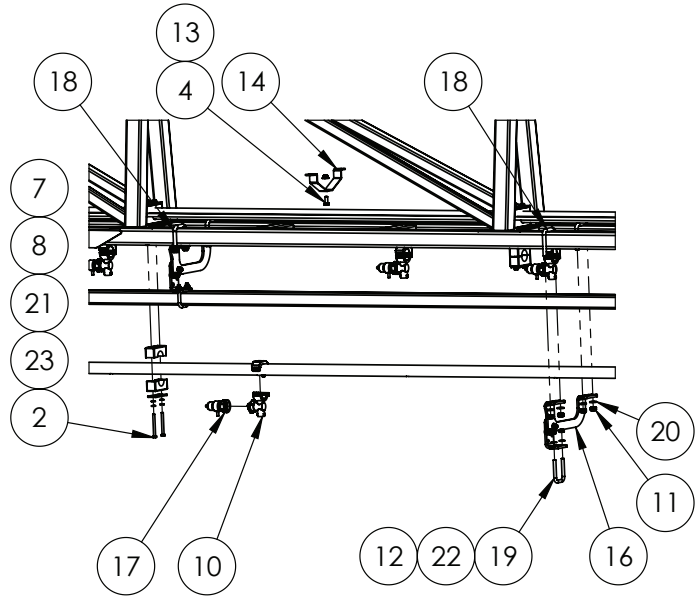

DETAIL B
FRONT VIEW

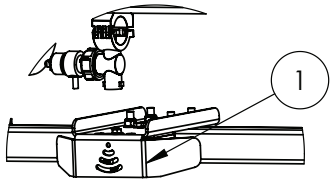

DETAIL C

IF DESCRIPTION PREFIX IS ASSEMBLY DRAWING ONLY OR PRODUCTION DRAWING ONLY THE ITEM IS NOT FOR SALE			
ITEM	PART NUMBER	DESCRIPTION	QTY
1	GA4912625	ASSEMBLY DRAWING ONLY, BRACKET, SENSOR, RAVEN XRT 107-0235-001	1
2	GA0500116	BOLT M6 X 65 SS A2-70	12
3	GA0500115	BOLT M6 X 75 SS A2-70	2
4	GA5004085	BOLT M8 X 20 GR8.8 ZP	3
5	GA4950110	BOOM POLY ASSEMBLY, BARE, 30M, LH INNER SECTION, DRILLED 500mm BROARDACRE,TRITECH	1
6	GA5002963	INSERT 38X38MM CAP	2
7	GA3500699	MOUNTING CLAMP, SINGLE TYPE, JAW, PAIR, GROUP 5, 33.7mm, RCS-33.5J	7
8	GA5078075	MOUNTING CLAMP, SINGLE TYPE, PLATE, TOP, GROUP 5, RCS-5PT	7
9	GA4702455	NUDGE BAR, 24-30M INNER, RIVX	1
10	GA5077962	NOZZLE BODY, SINGLE, 1", TEEJET, QJ17560A-1-NYB	14
11	GA5051445	NUT M10 NYLOC SS	16
12	GA5052590	NUT M8 NYLOC SS	10
13	GA5070710	NUT WITH FLANGE, PLASTIC, M8 X 1.25	3
14	GA4411215	PLATE, BOOM POLY SUPPORT MOUNT, INNER WING, TRITECH, MY21	3
15	GA4953950	PRODUCTION DRAWING ONLY, NOZZLE GUARD MOUNT, RIVX BOOM, INNER	1
16	GA4953945	PRODUCTION DRAWING ONLY, NOZZLE GUARD MOUNTING, RIVX BOOM, INNER	4
17	GA5065520	SPRAY STOP, RAPIDFIRE, SUIT TEEJET NOZZLE BODY, ALTEK	14
18	GA5053645	U BOLT SQUARE TOP M10 X 52 X 75	8
19	GA0500084	U BOLT SQUARE TOP M8 X 42 X 65, 304 SS	5
20	GA5000117	WASHER 10mm FLAT SS HD	16
21	GA5004437	WASHER 6mm FLAT SS	14
22	GA5003643	WASHER 8mm FLAT SS HD	12
23	GA5004447	WASHER M6 SPRING SS	14
GA4951435 GOLDACRES		ASSEMBLY DRAWING ONLY, BOOM INNER ASSEMBLY, 24-30M, LH, RIVX SERIES 2 MY21	REV 04

Bracket, Nozzle Guard, Tri-Tech, Up To (S/N 203888) (Old Style)

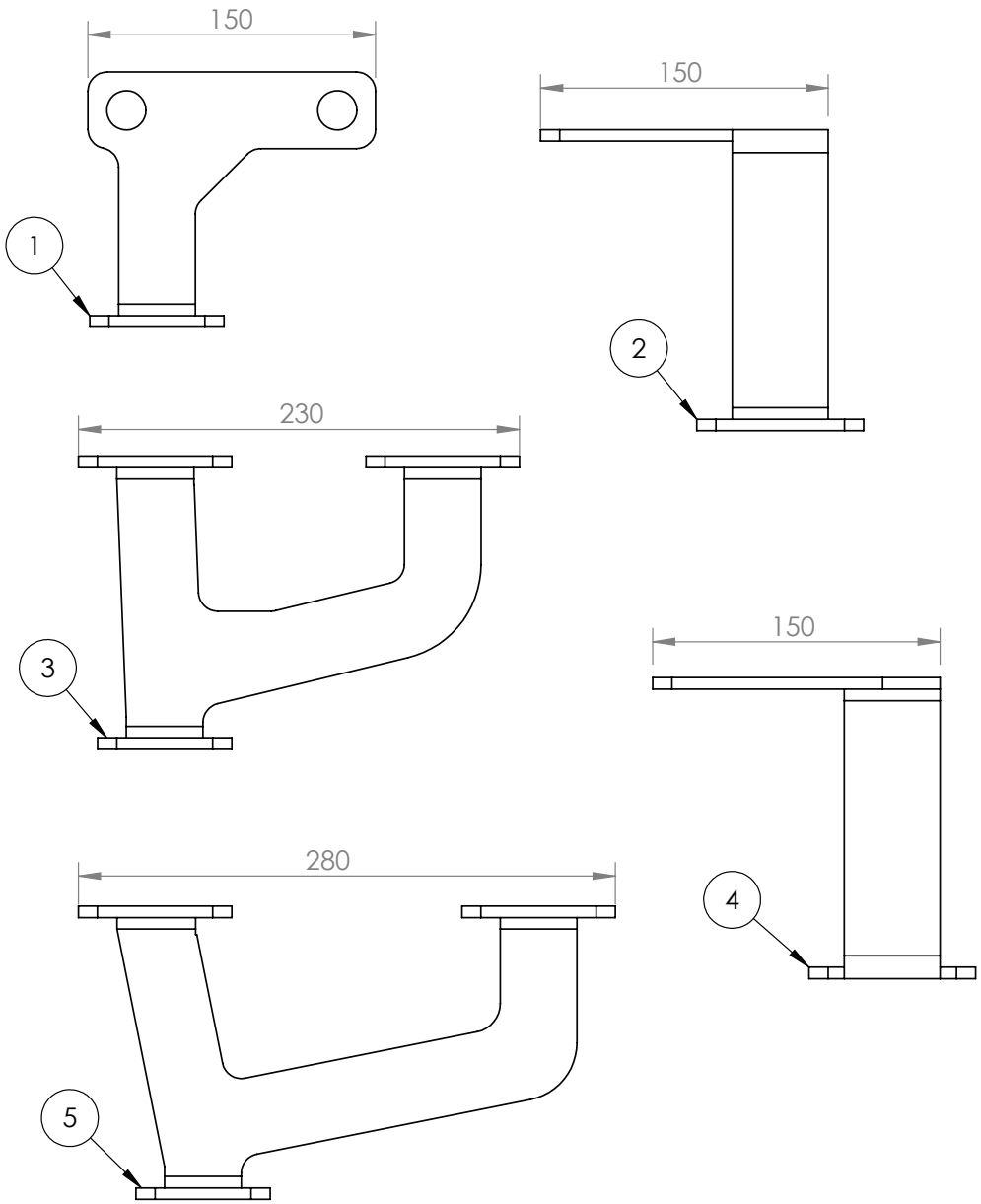

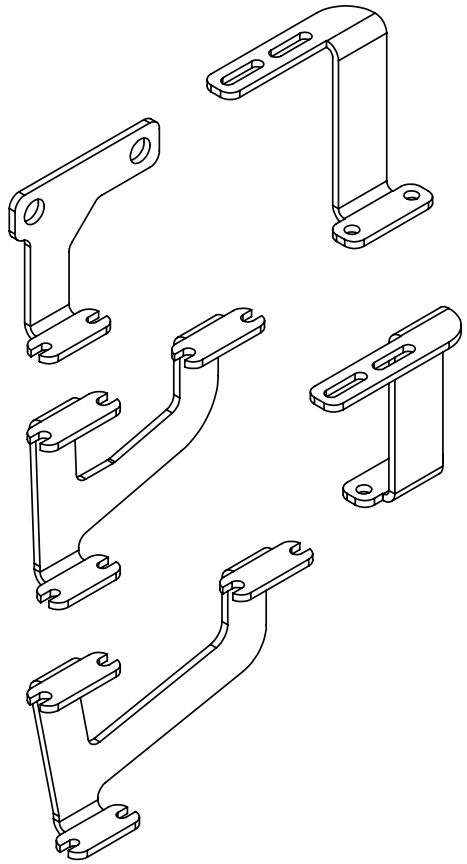

IF DESCRIPTION PREFIX IS ASSEMBLY DRAWING ONLY OR PRODUCTION DRAWING ONLY THE ITEM IS NOT FOR SALE			
ITEM	PART NUMBER	DESCRIPTION	QTY
1	GA4406135	PLATE, BOOM NUDGE BAR MOUNT, INNER END, TRITECH, MY20	1
2	GA4407320	BRACKET, SPRAY BAR MOUNT A, TRITECH CENTRE SECTION, MY20	1
3	GA4406130	PLATE, BOOM NUDGE BAR MOUNT, OUTER, TRITECH, MY20	1
4	GA4407325	BRACKET, SPRAY BAR MOUNT B, TRITECH CENTRE SECTION, MY20	1
5	GA4406125	PLATE, BOOM NUDGE BAR MOUNT, INNER, TRITECH, MY20	1
GA7800381 GOLDACRES		PARTS DRAWING ONLY, NUDGE BAR BRACKETS, TRI-TECH, MY20	REV

Bracket, Nozzle Guard, RIVX Boom, Inner Wing, From (S/N 203889)

MOUNTING LOCATION TO BE SELECTED
TO SO THAT THE NUDGE BAR COVERS
THE NOZZEL ON THE HIGHEST SETTING

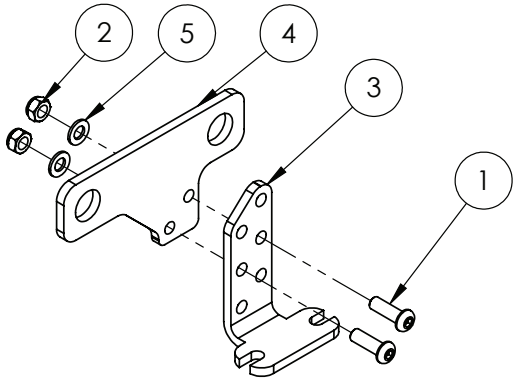

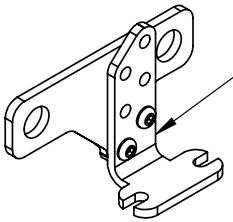

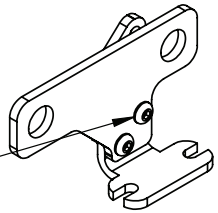

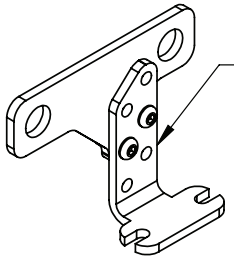

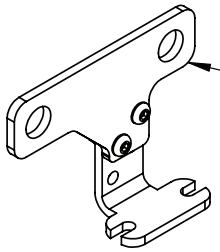

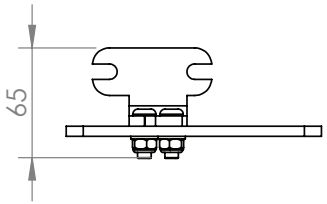

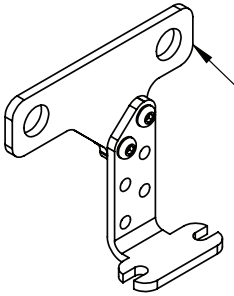

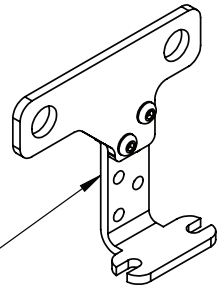

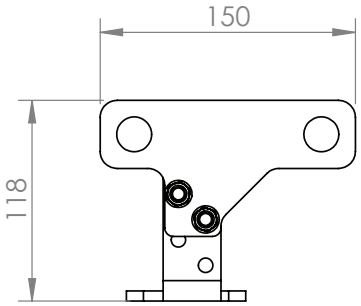

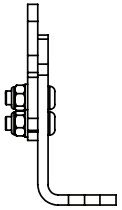

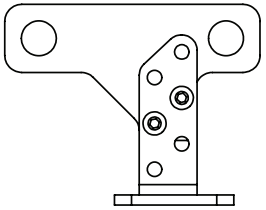

IF DESCRIPTION PREFIX IS ASSEMBLY DRAWING ONLY OR PRODUCTION DRAWING ONLY THE ITEM IS NOT FOR SALE			
ITEM	PART NUMBER	DESCRIPTION	QTY
1	GA5011473	BHCS M8 X 25 SS A2-70	2
2	GA5052590	NUT M8 NYLOC SS	2
3	GA4415520	PLATE, BOOM NUDGE BAR MOUNT, ADJUSTIBLE, LOWER, INSIDE END, TRITECH	1
4	GA4415515	PLATE, BOOM NUDGE BAR MOUNT, ADJUSTIBLE, TOP, INSIDE END, TRITECH	1
5	GA5003651	WASHER 8mm FLAT SS	2
GA4953950 GOLDACRES		PRODUCTION DRAWING ONLY, NOZZLE GUARD MOUNT, RIVX BOOM, INNER	REV 00

Bracket, Nozzle Guard, RIVX Boom, Inner Wing, From (S/N 203889)

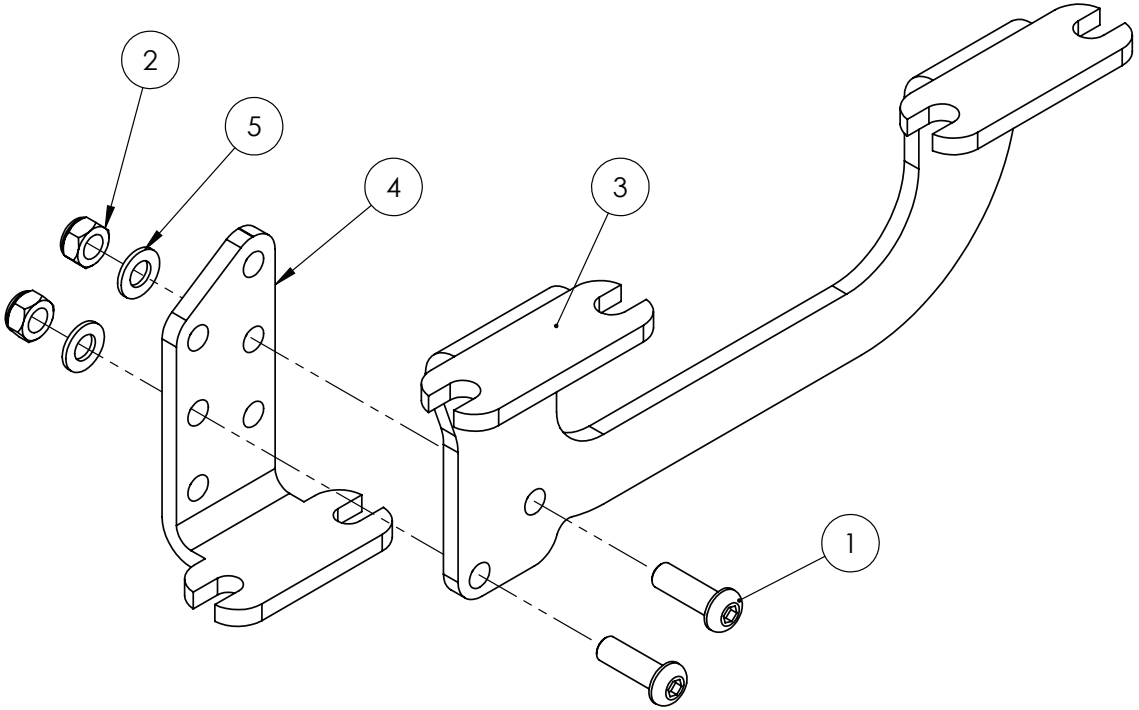

MOUNTING LOCATION TO BE SELECTED
SO THAT THE NUDGE BAR COVERS
THE NOZZLE ON HIGHEST SETTING

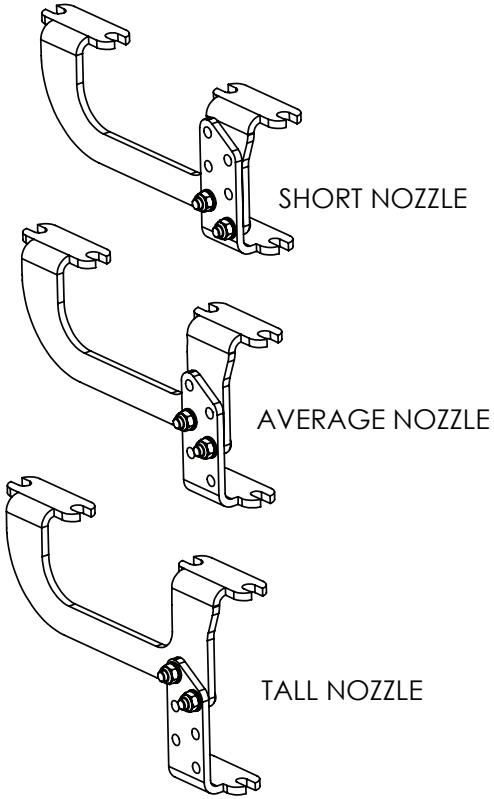

IF DESCRIPTION PREFIX IS ASSEMBLY DRAWING ONLY OR PRODUCTION DRAWING ONLY THE ITEM IS NOT FOR SALE			
ITEM	PART NUMBER	DESCRIPTION	QTY
1	GA5011473	BHCS M8 X 25 SS A2-70	2
2	GA5052590	NUT M8 NYLOC SS	2
3	GA4415500	PLATE, BOOM NUDGE BAR MOUNT, ADJUSTABLE, TOP, INNER, TRITECH	1
4	GA4415505	PLATE, BOOM NUDGE BAR MOUNT, ADJUSTIBLE, LOWER, TRITECH	1
5	GA5003651	WASHER 8mm FLAT SS	2
GA4953945 GOLDACRES		PRODUCTION DRAWING ONLY, NOZZLE GUARD MOUNTING, RIVX BOOM, INNER	REV 00.E

Bracket, Nozzle Guard, RIVX Boom, Outer Wing, From (S/N 203889)

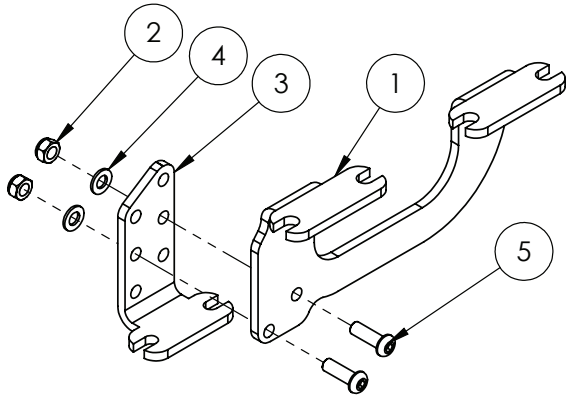

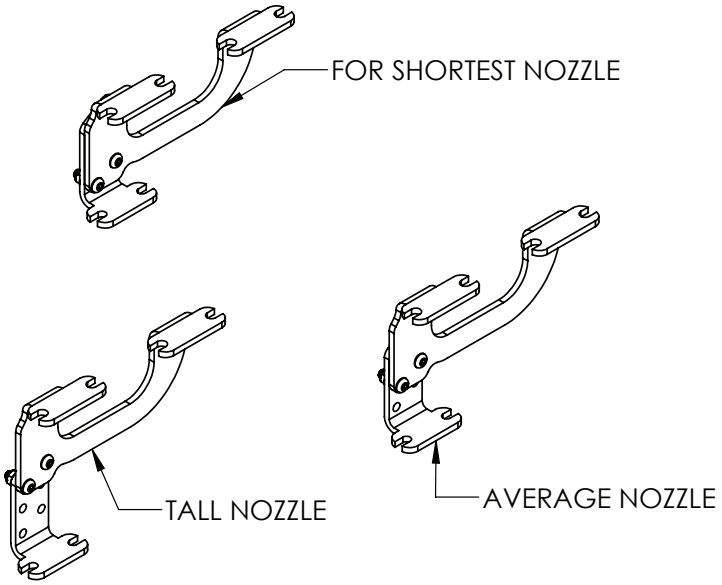

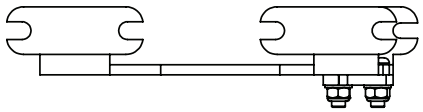

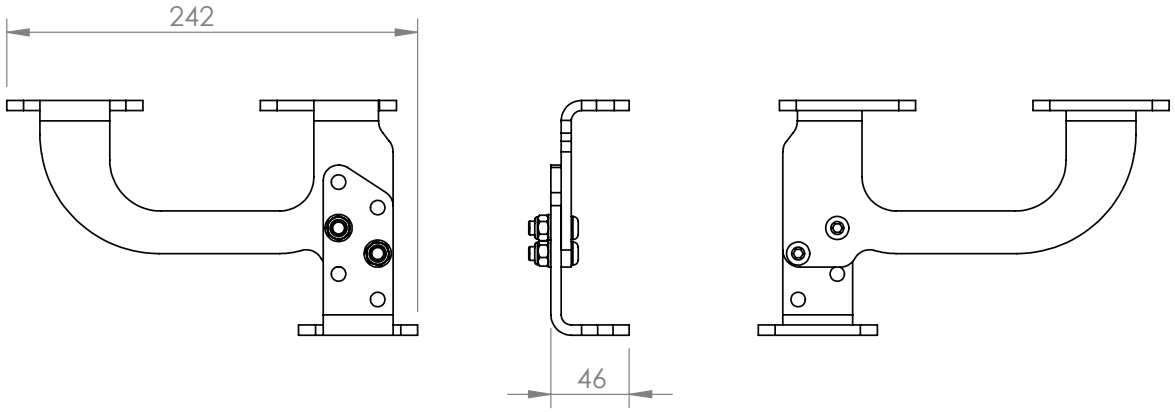

IF DESCRIPTION PREFIX IS ASSEMBLY DRAWING ONLY OR PRODUCTION DRAWING ONLY THE ITEM IS NOT FOR SALE			
ITEM	PART NUMBER	DESCRIPTION	QTY
1	GA4415510	PLATE, BOOM NUDGE BAR MOUNT, ADJUSTABLE, TOP, OUTER, TRITECH	1
2	GA5052590	NUT M8 NYLOC SS	2
3	GA4415505	PLATE, BOOM NUDGE BAR MOUNT, ADJUSTIBLE, LOWER, TRITECH	1
4	GA5003651	WASHER 8mm FLAT SS	2
5	GA5011473	BHCS M8 X 25 SS A2-70	2
GA4953940 GOLDACRES		PRODUCTION DRAWING ONLY, NOZZLE GUARD MOUNTING, RIVX BOOM, OUTER	REV 00

Boom Outer, RIVX, 24mt, Boom Poly Mounting

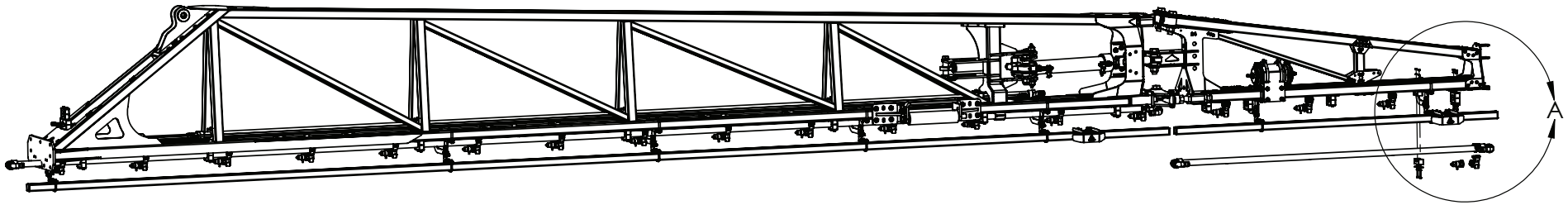

FRONT VIEW

DETAIL A

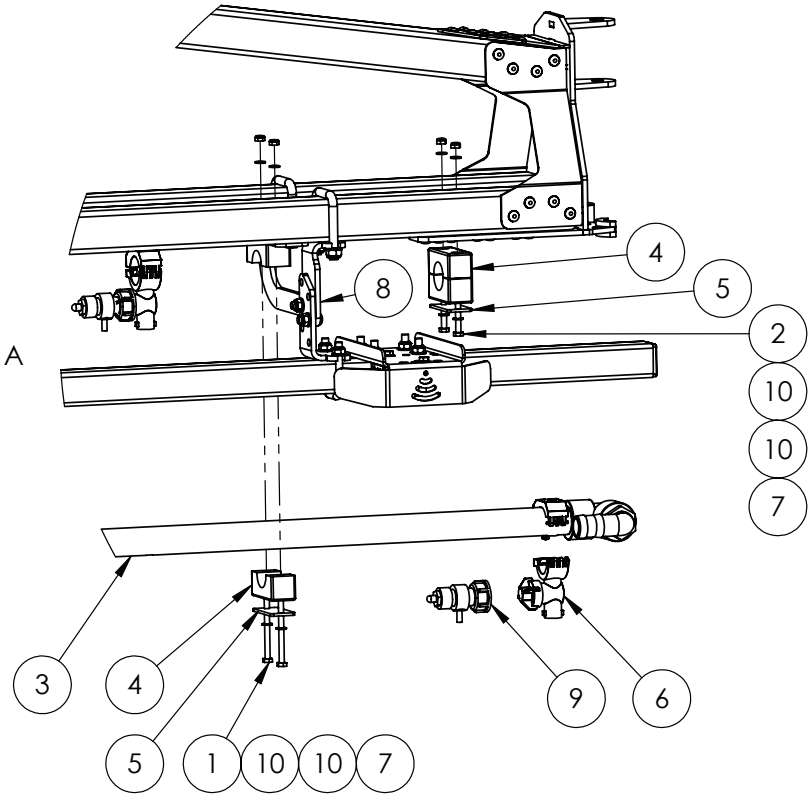

IF DESCRIPTION PREFIX IS ASSEMBLY DRAWING ONLY OR PRODUCTION DRAWING ONLY THE ITEM IS NOT FOR SALE			
ITEM	PART NUMBER	DESCRIPTION	QTY
1	GA0500115	BOLT M6 X 75 SS A2-70	6
2	GA5011439	BOLT M6 X 80 GR8.8 ZP	4
3	GA4950085	BOOM POLY ASSEMBLY, BARE, 24M, LH OUTER SECTION, DRILLED 500mm BROADACRE, RIVX	1
4	GA3500699	MOUNTING CLAMP, SINGLE TYPE, JAW, PAIR, GROUP 5, 33.7mm, RCS-33.5J	5
5	GA5078075	MOUNTING CLAMP, SINGLE TYPE, PLATE, TOP, GROUP 5, RCS-5PT	5
6	GA5077962	NOZZLE BODY, SINGLE, 1", TEEJET, QJ17560A-1-NYB	4
7	GA5004429	NUT M6 NYLOC SS	10
8	GA4953940	PRODUCTION DRAWING ONLY, NOZZLE GUARD MOUNTING, RIVX BOOM, OUTER	2
9	GA5065520	SPRAY STOP, RAPIDFIRE, SUIT TEEJET NOZZLE BODY, ALTEK	4
10	GA5004437	WASHER 6mm FLAT SS	20
GA4950700-04 GOLDACRES		ASSEMBLY DRAWING ONLY, BOOM OUTER ASSEMBLY, 24M LH, RIVX SERIES 2 MY21	REV 03.A

Boom Outer, RIVX, XRT Bracket & Air Tank Mount, 24mt

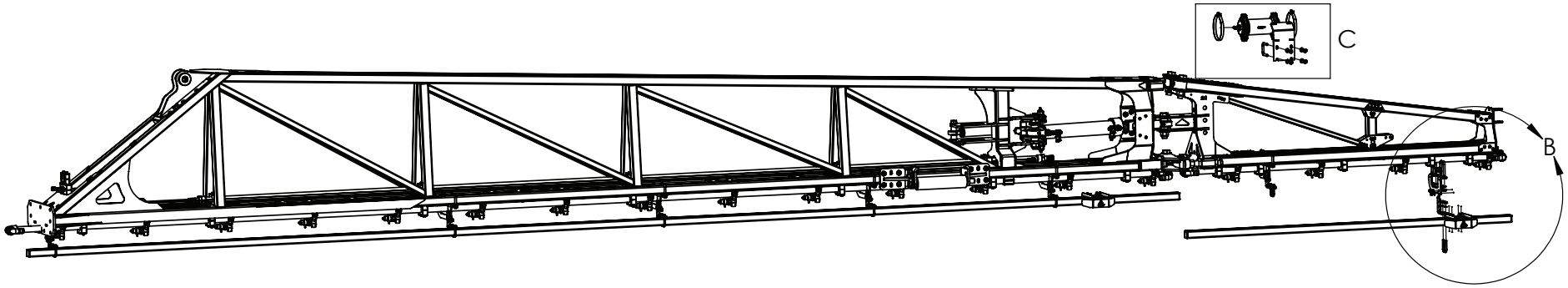

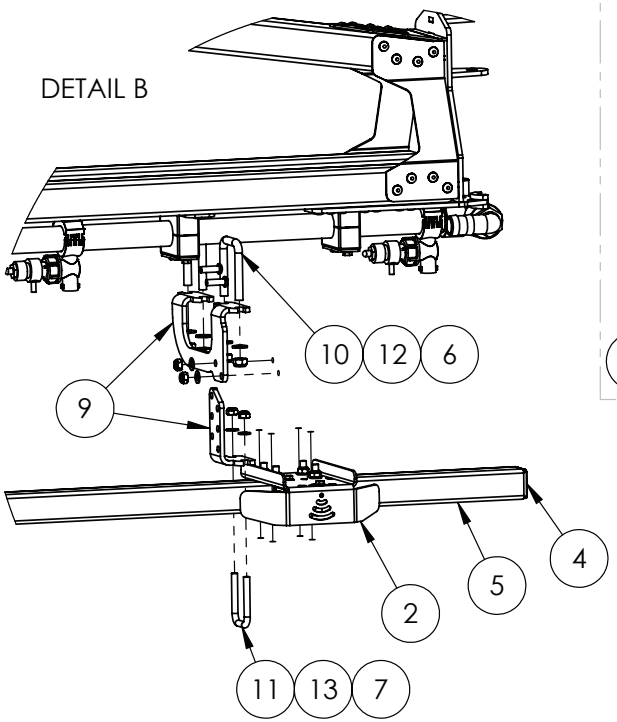

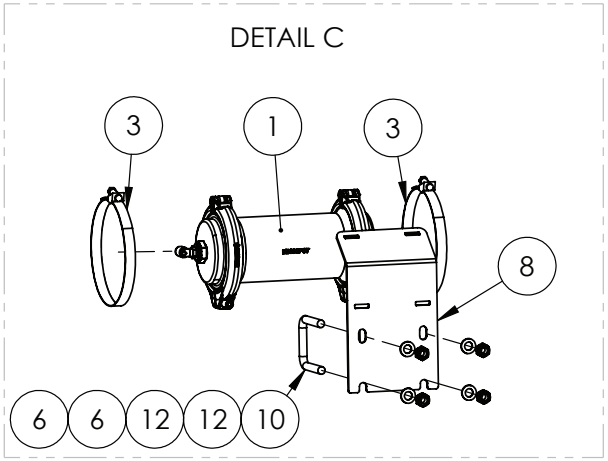

ITEMS SHOWN IN BOX ARE FITTED ONLY IF 10072 OPTIONED.

IF DESCRIPTION PREFIX IS ASSEMBLY DRAWING ONLY OR PRODUCTION DRAWING ONLY THE ITEM IS NOT FOR SALE			
ITEM	PART NUMBER	DESCRIPTION	QTY
1	GA4949330	AIR TANK, 0.9L, PLASTIC, 10 BAR, SUIT RAPID FIRE 3TS PRO	1
2	GA4912625	ASSEMBLY DRAWING ONLY, BRACKET, SENSOR, RAVEN XRT 107-0235-001	1
3	GA5053945	HOSE CLAMP 51mm-130mm - QUICK RELEASE	2
4	GA5002963	INSERT 38X38MM CAP	2
5	GA4703265	NUDGE BAR, 24M OUTER, RIVX	1
6	GA5051445	NUT M10 NYLOC SS	12
7	GA5052590	NUT M8 NYLOC SS	4
8	GA4414755	PLATE, MOUNT BOOM, 3TS PRO AIR TANK	1
9	GA4953940	PRODUCTION DRAWING ONLY, NOZZLE GUARD MOUNTING, RIVX BOOM, OUTER	2
10	GA5053645	U BOLT SQUARE TOP M10 X 52 X 75	6
11	GA0500084	U BOLT SQUARE TOP M8 X 42 X 65, 304 SS	2
12	GA5000117	WASHER 10mm FLAT SS HD	12
13	GA5003643	WASHER 8mm FLAT SS HD	4
GA4950700-04 GOLDACRES		ASSEMBLY DRAWING ONLY, BOOM OUTER ASSEMBLY, 24M LH, RIVX SERIES 2 MY21	REV 03.A

Boom Wing, Bi-Fold, RIVX

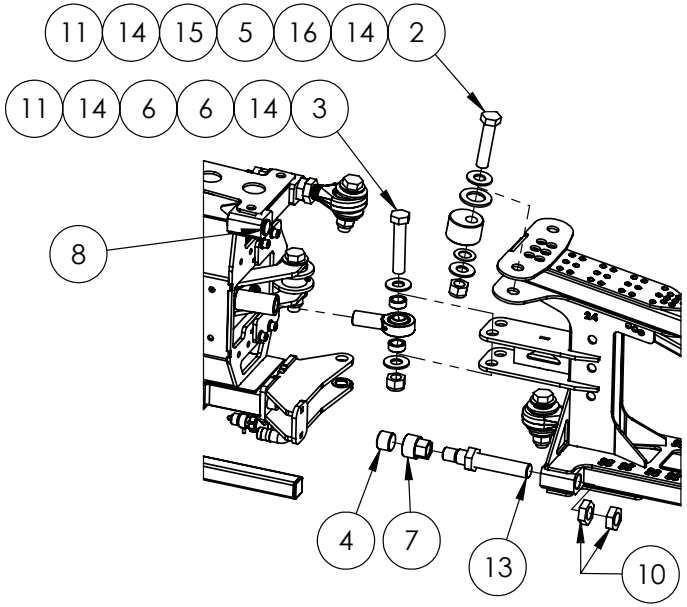

FRONT VIEW

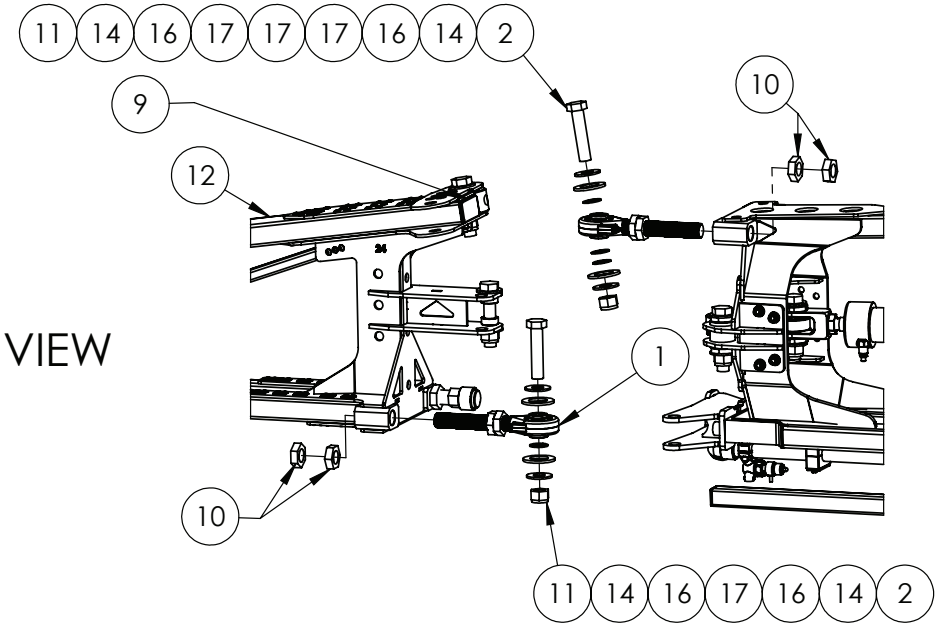

REAR VIEW

IF DESCRIPTION PREFIX IS ASSEMBLY DRAWING ONLY OR PRODUCTION DRAWING ONLY THE ITEM IS NOT FOR SALE			
ITEM	PART NUMBER	DESCRIPTION	QTY
1	GA4909310	ASSEMBLY DRAWING ONLY, ROSE END BEARING, FORGED	2
2	GA5006149	BOLT 1 UNC X 4 1/2 GR8 ZP	3
3	GA5006031	BOLT 1" X 5" UNC GR8 ZP	1
4	GA4551330	BOOM STOPPER, DIAMETER 40mm X 30mm LONG, URETHANE, RED	1
5	GA4572500	BOOM FOLD ADJUSTER BUSH MY13	1
6	GA4551160	BUSH, 25.7mm ID X 37mm OD X 14.5mm LONG, CRUSH TUBE ZP	2
7	GA4551100	BUSH, BOOM STOPPER BOLT	1
8	GA5078635	END CAP, PLASTIC, BLACK, INSERT, ROUND. 33.7mm, 1 - 3mm WALL	2
9	GA5078601	END CAP, PLASTIC, BLACK, INSERT, RHS. 100 X 50, 2.0 - 4.0mm WALL	1
10	GA5010963	NUT 1 1/4 UNF 12 TPI ZP LOCK NUT	7
11	GA5012439	NUT 1" NYLOC UNC ZP	4
12	GA4602150	OUTER BOOM, 24M, RIVX	1
13	GA4550645	THREADED BOOM PIVOT ADJUSTER, 1 1/4" UNF AND M28 THREADS, 48m BOOM	1
14	GA5017659	WASHER 1 FLAT ZP HD (5mm THICK)	8
15	GA5001893	WASHER 1" X 1 7/8" FLAT ZP	1
16	GA4407825	WASHER, PLASTIC DISC, ROSE END SPACER, TRITECH MY20	5
17	GA4522315	WASHER, GENERAL SPACER	4
GA4950700-03 GOLDACRES		ASSEMBLY DRAWING ONLY, OUTER BOOM ATTACHMENT, 24M LH, RIVX SERIES 2 MY21	REV 03

Boom Stopper, Rubber, with Mounting Plate, 24mt - 30mt

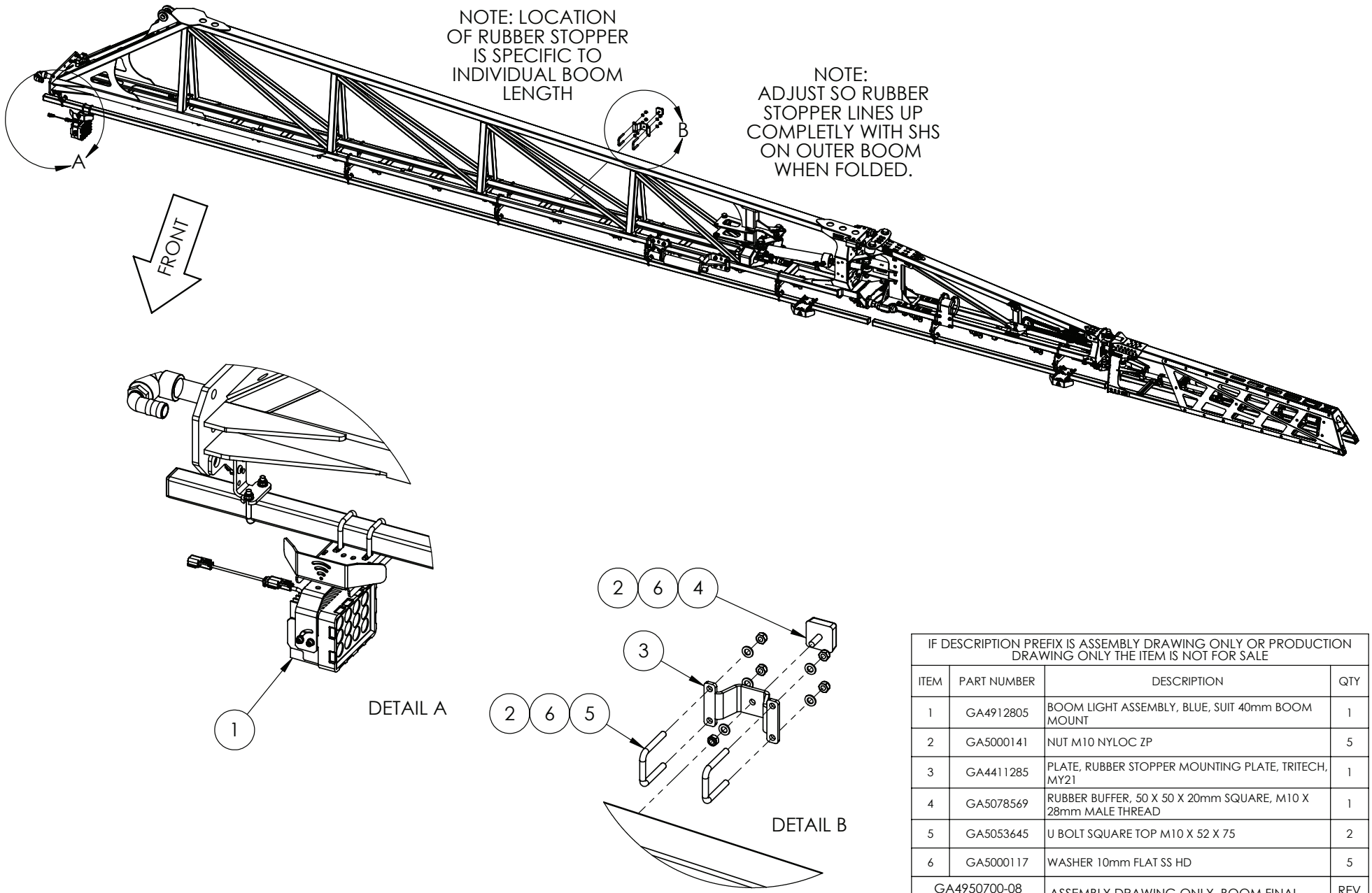

IF DESCRIPTION PREFIX IS ASSEMBLY DRAWING ONLY OR PRODUCTION DRAWING ONLY THE ITEM IS NOT FOR SALE			
ITEM	PART NUMBER	DESCRIPTION	QTY
1	GA4912805	BOOM LIGHT ASSEMBLY, BLUE, SUIT 40mm BOOM MOUNT	1
2	GA5000141	NUT M10 NYLOC ZP	5
3	GA4411285	PLATE, RUBBER STOPPER MOUNTING PLATE, TRITECH, MY21	1
4	GA5078569	RUBBER BUFFER, 50 X 50 X 20mm SQUARE, M10 X 28mm MALE THREAD	1
5	GA5053645	U BOLT SQUARE TOP M10 X 52 X 75	2
6	GA5000117	WASHER 10mm FLAT SS HD	5
GA4950700-08 GOLDACRES		ASSEMBLY DRAWING ONLY. BOOM FINAL ASSEMBLY, 24M LH, RIVX SERIES 2 MY21	REV 01

Boom Light Assembly, Blue

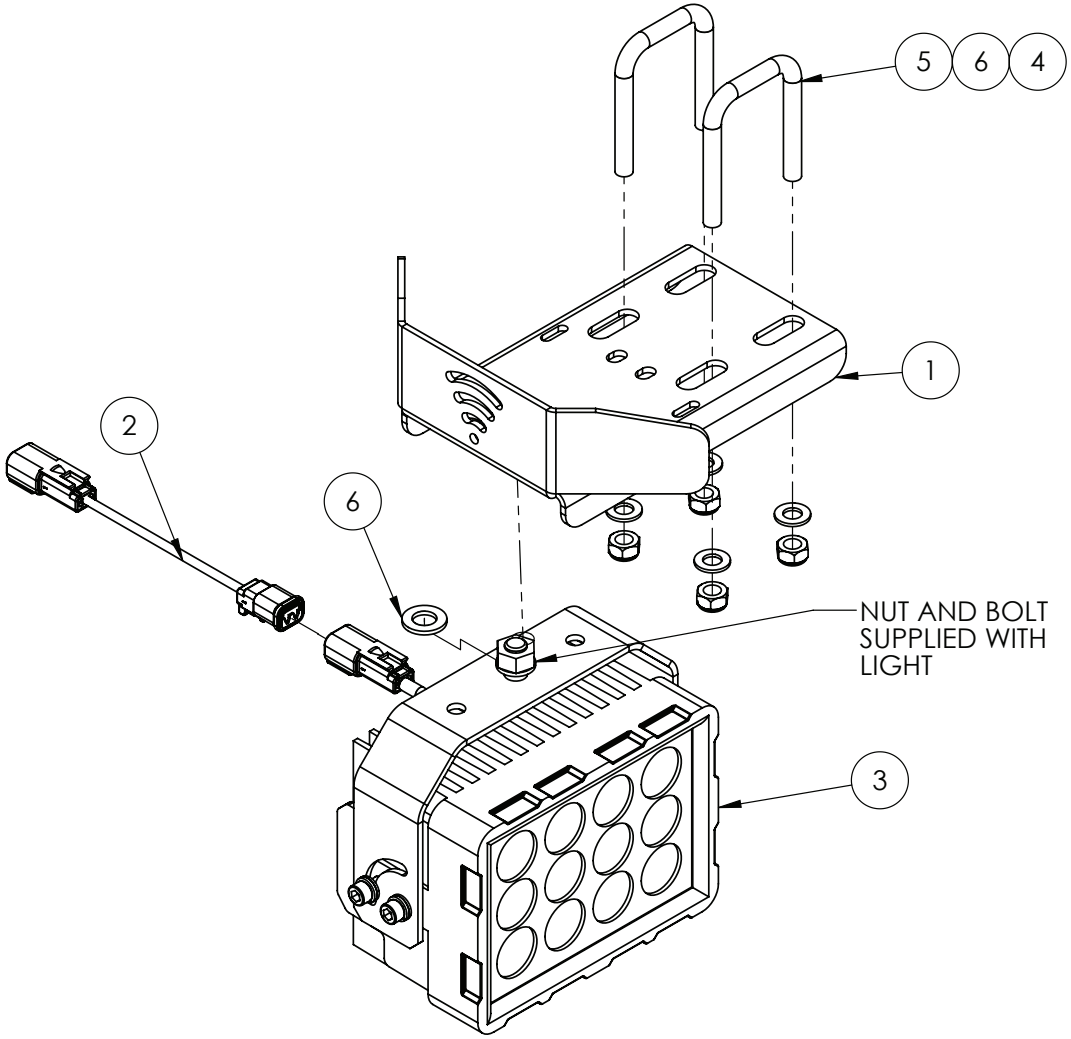

IF DESCRIPTION PREFIX IS ASSEMBLY DRAWING ONLY OR PRODUCTION DRAWING ONLY THE ITEM IS NOT FOR SALE			
ITEM	PART NUMBER	DESCRIPTION	QTY
1	GA4411280	BRACKET, RAVEN XRT RADAR SENSOR / LIGHT MOUNT, BOOM, WITH FRONT SHIELD	1
2	GA3000574	ELECTRICAL HARNESS, RCM NOZZLE EXTENSION, 1000mm	1
3	GA3000333	LIGHT, LED, BLUE, SPOT BEAM, 60 WATT, GLASS FRONT	1
4	GA5000141	NUT M10 NYLOC ZP	4
	GA5052590	NUT M8 NYLOC SS	4
5	GA5053645	U BOLT SQUARE TOP M10 X 52 X 75	2
	GA0500084	U BOLT SQUARE TOP M8 X 42 X 65, 304 SS	2
6	GA5000117	WASHER 10mm FLAT SS HD	5
	GA5003643	WASHER 8mm FLAT SS HD	4
GA4912805 GOLDACRES		BOOM LIGHT ASSEMBLY, BLUE, SUIT 40mm BOOM MOUNT	REV 01

NOTE:
M8 U BOLT FITTED TO RIVX BOOM
M10 U BOLT FITTED TO 48M BOOM

Boom, Bi-Fold Catch Mounting & Boom Protectors

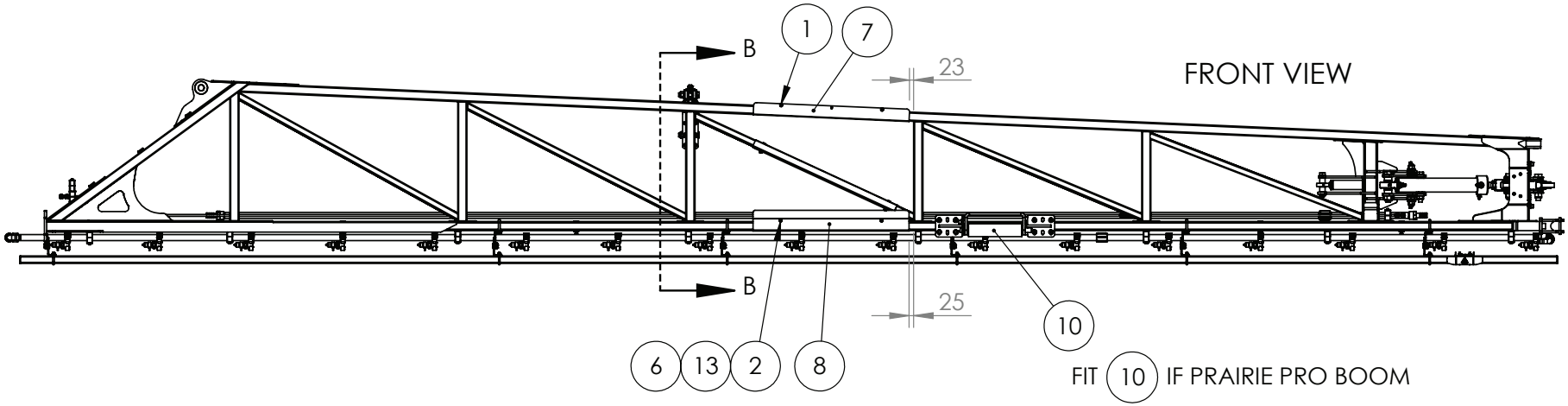

FIT (10) IF PRAIRIE PRO BOOM

FIT NUDGE BAR MOUNT UNLESS BEHIND ROLLER

FIT (8) (7) (9) IF G6 BOOM

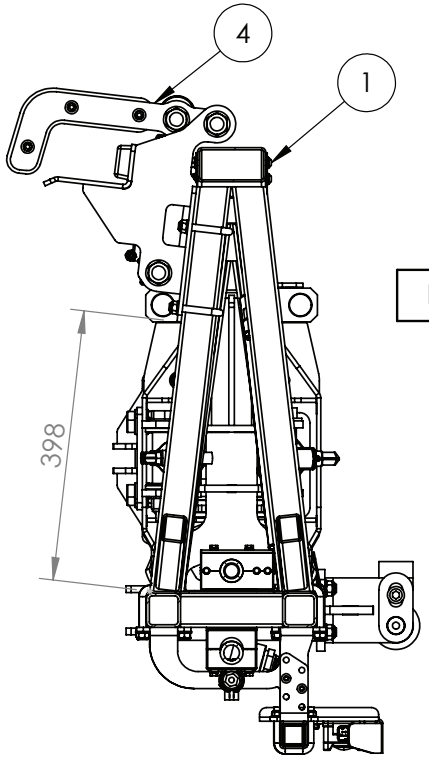

SECTION B-B

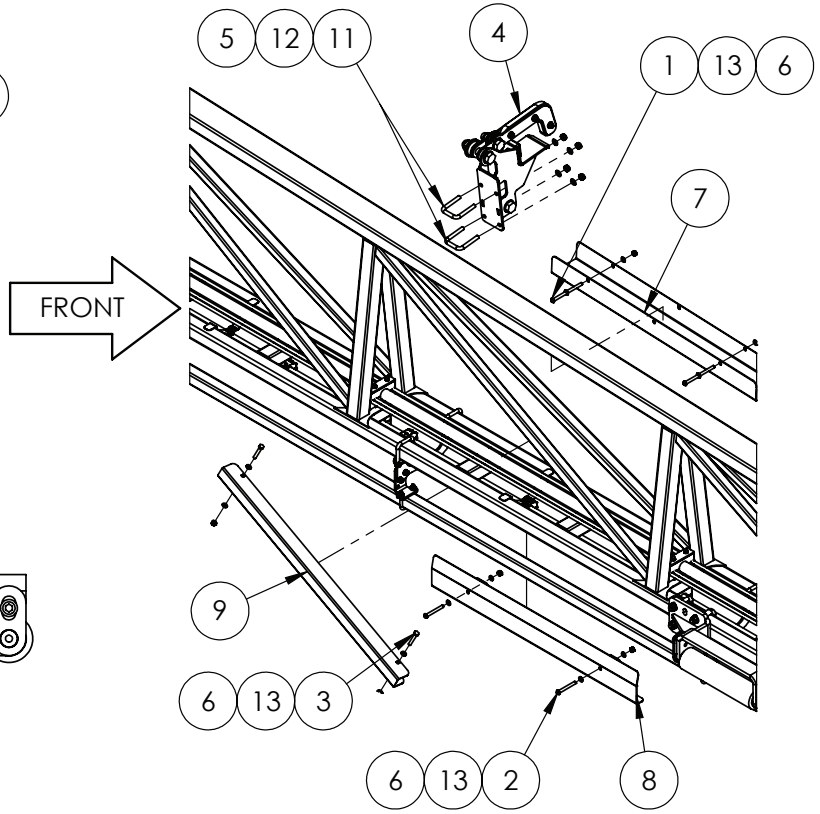

IF DESCRIPTION PREFIX IS ASSEMBLY DRAWING ONLY OR PRODUCTION DRAWING ONLY THE ITEM IS NOT FOR SALE			
ITEM	PART NUMBER	DESCRIPTION	QTY
1	GA0500187	BHCS M8 X 120 SS A2-70	2
2	GA5078889	BHCS M8 X 70 SS A2-70	2
3	GA5004727	BOLT M8 X 50 GR8.8 ZP	2
4	GA4949740	BOOM BIFOLD CATCH ASSEMBLY, MY20	1
5	GA5051445	NUT M10 NYLOC SS	4
6	GA5052590	NUT M8 NYLOC SS	6
7	GA4408155	PROTECTOR, BOOM CORD, SUIT 100 X 50, 600mm, SS	1
8	GA4402215	PROTECTOR, BOOM CORD, SUIT 50 X 50, EXTENDED GUIDE, SS	1
9	GA4000242	PROTECTOR, BOOM DIAGONAL BRACE, SUIT 35 X 35, 300mm, SS	1
10	GA4951165	SUB ASSEMBLY, BOOM REST, RIVX ROLLER, PRAIRIE PRO, 2021	1
11	GA5053645	U BOLT SQUARE TOP M10 X 52 X 75	2
12	GA5000117	WASHER 10mm FLAT SS HD	4
13	GA5003643	WASHER 8mm FLAT SS HD	12
GA4950720-02 GOLDACRES		ASSEMBLY DRAWING ONLY, BOOM INNER ASSEMBLY, 36M LH, RIVX SERIES 2 MY21	REV 09

Boom, Bi-fold Catch Assembly, Single Rubber Buffer

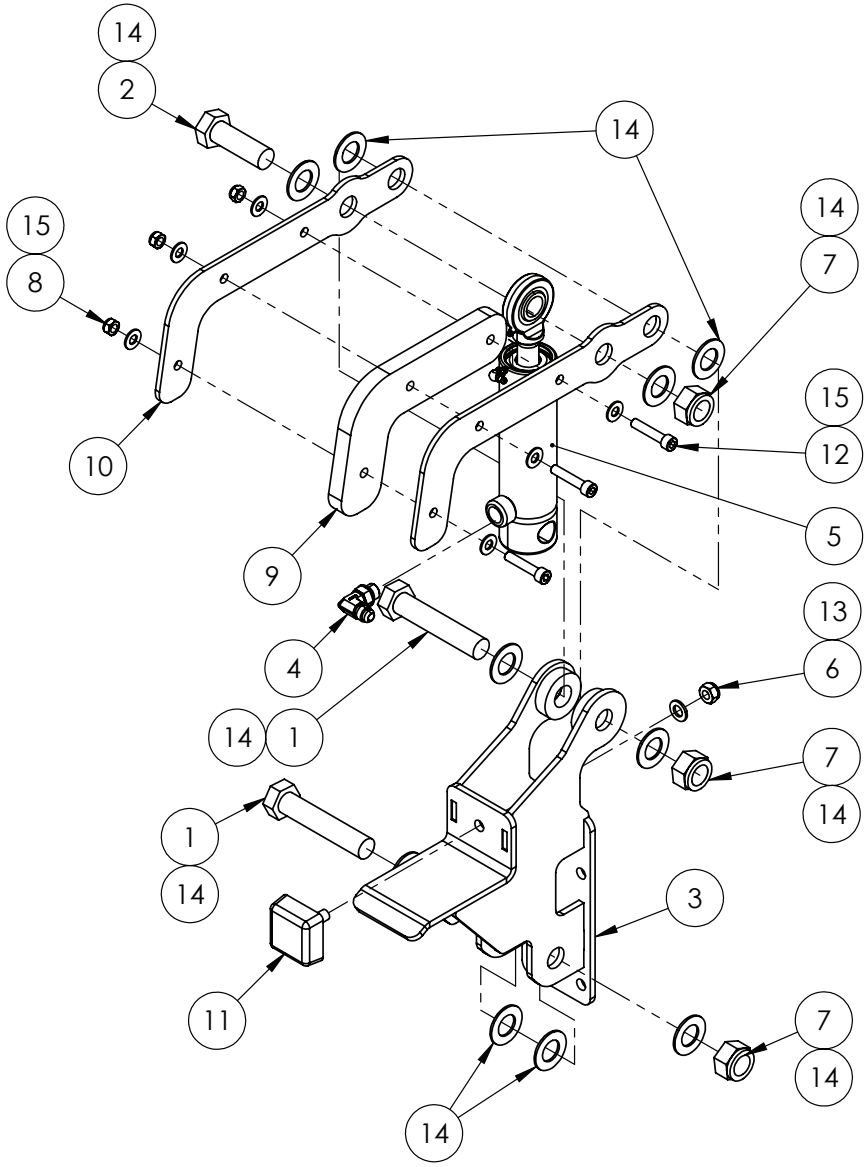

IF DESCRIPTION PREFIX IS ASSEMBLY DRAWING ONLY OR PRODUCTION DRAWING ONLY THE ITEM IS NOT FOR SALE			
ITEM	PART NUMBER	DESCRIPTION	QTY
1	GA5048355	BOLT M20 X 100 GR8.8 ZP	2
2	GA5011333	BOLT M20 X 60 GR8.8 ZP	1
3	GA4602690	BOOM BIFOLD CATCH BRACKET, MY20	1
4	GA3500716	HYDRAULIC ADAPTOR ELBOW, 9/16" UNO TO 9/16" JIC, 90 DEG, S91-0909	1
5	GA3500480	HYDRAULIC CYLINDER, BORE 1.5", ROD 0.75", STROKE 28mm, DISPLACEMENT, SPRING RETURN	1
6	GA5000141	NUT M10 NYLOC ZP	1
7	GA5048125	NUT M20 NYLOC COARSE ZP	3
8	GA5052590	NUT M8 NYLOC SS	1
9	GA5078598	PLASTIC BOOM BIFOLD CATCH HOOK, MY20	1
10	GA4403556	PLATE, LATCH BRACKET, BOOM LATCH, RIVEX BOOM	2
11	GA5078569	RUBBER BUFFER, 50 X 50 X 20mm SQUARE, M10 X 28mm MALE THREAD	1
12	GA5011487	SHCS M8 X 40 GR 12.9 ZP	3
13	GA5000117	WASHER 10mm FLAT SS HD	1
14	GA5001742	WASHER 20mm FLAT SS 2.0mm	10
15	GA5003643	WASHER 8mm FLAT SS HD	6
GA4949740 GOLDACRES		BOOM BIFOLD CATCH ASSEMBLY, MY20	REV 04

Boom, Bi-fold Catch Assy, Dual Rubber, 28mt - 42mt (From S/N 203944)

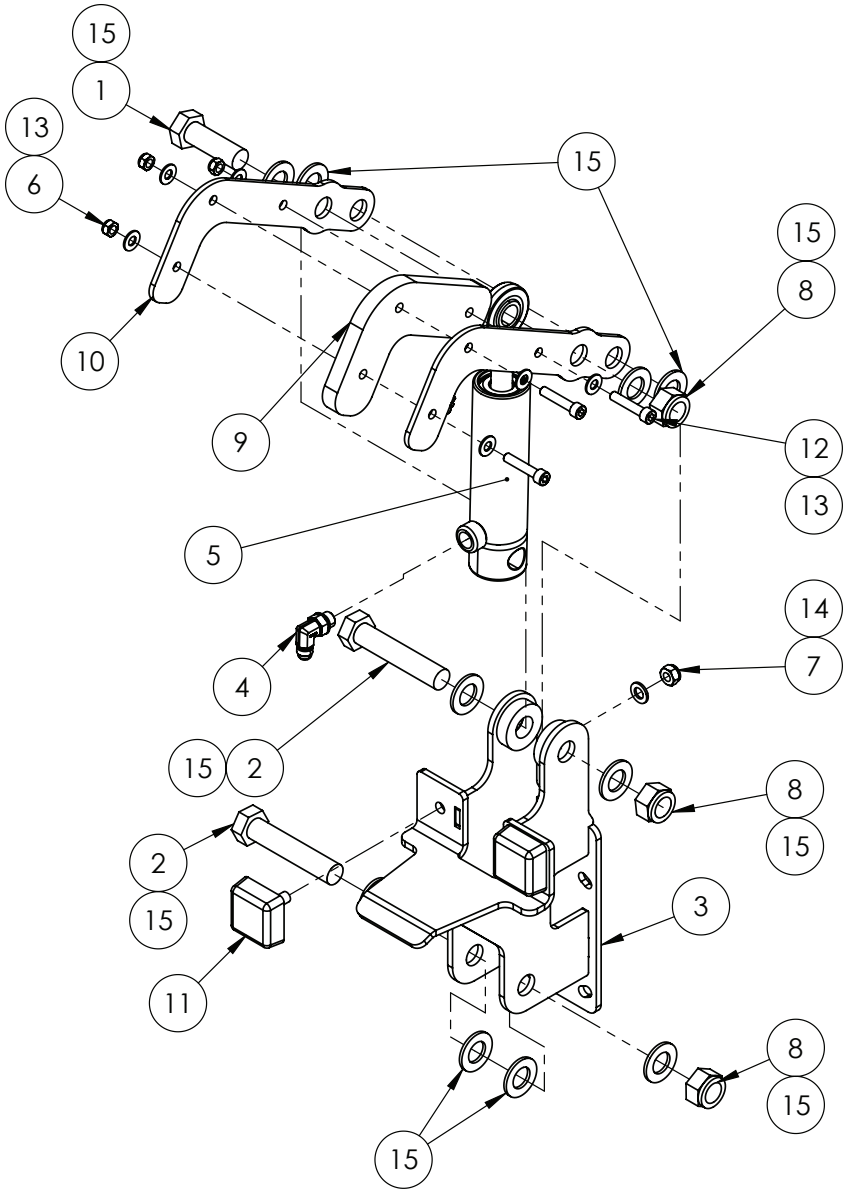

IF DESCRIPTION PREFIX IS ASSEMBLY DRAWING ONLY OR PRODUCTION DRAWING ONLY THE ITEM IS NOT FOR SALE			
ITEM	PART NUMBER	DESCRIPTION	QTY
1	GA5011333	BOLT M20 X 60 GR8.8 ZP	1
2	GA5048355	BOLT M20 X 100 GR8.8 ZP	2
3	GA5078976	BOOM BIFOLD CATCH BRACKET, WIDE	1
4	GA3500716	HYDRAULIC ADAPTOR ELBOW, 9/16" UNO TO 9/16" JIC, 90 DEG, S91-0909	1
5	GA3500480	HYDRAULIC CYLINDER, BORE 1.5", ROD 0.75", STROKE 28mm, DISPLACEMENT, SPRING RETURN	1
6	GA5052590	NUT M8 NYLOC SS	1
7	GA5000141	NUT M10 NYLOC ZP	2
8	GA5048125	NUT M20 NYLOC COARSE ZP	3
9	GA5078934	PLASTIC BOOM BIFOLD CATCH HOOK, RIVX	1
10	GA4415680	PLATE, LATCH BRACKET, BOOM LATCH, WIDE, RIVX BOOM	2
11	GA5078569	RUBBER BUFFER, 50 X 50 X 20mm SQUARE, M10 X 28mm MALE THREAD	2
12	GA5011487	SHCS M8 X 40 GR 12.9 ZP	3
13	GA5003643	WASHER 8mm FLAT SS HD	6
14	GA5000117	WASHER 10mm FLAT SS HD	2
15	GA5001741	WASHER 20mm FLAT SS HD	10
16	GA5051970	GREASE NIPPLE, 6mm, 90 DEG	1
GA4949742 GOLDACRES		BOOM BIFOLD CATCH ASSEMBLY, WIDE	REV 01

Recirculation Poly, 36mt & Hydraulic Boom Line Tubing

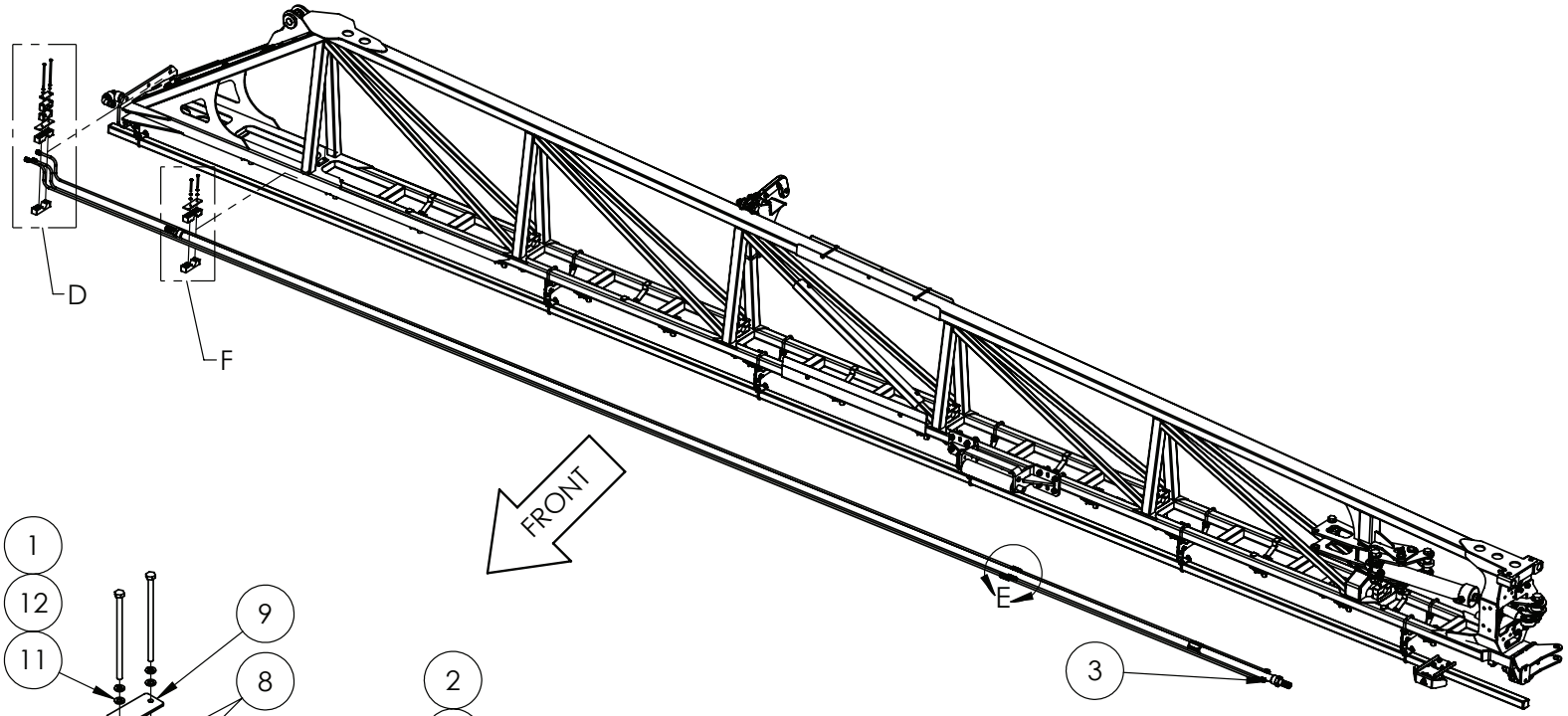

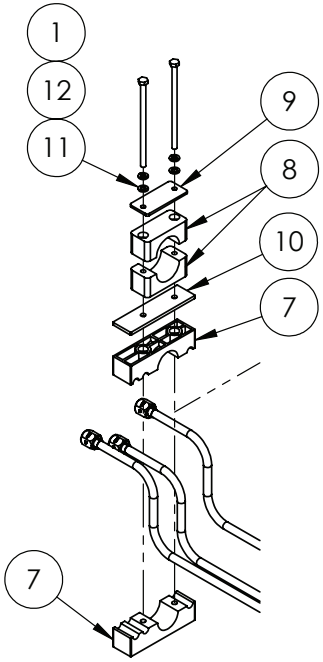

DETAIL D

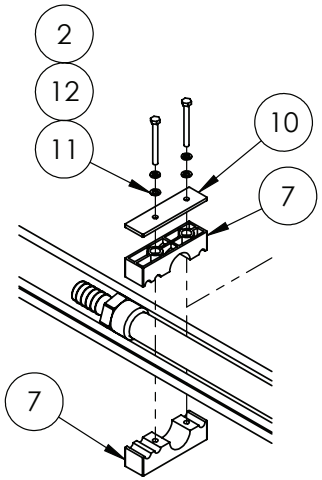

DETAIL F

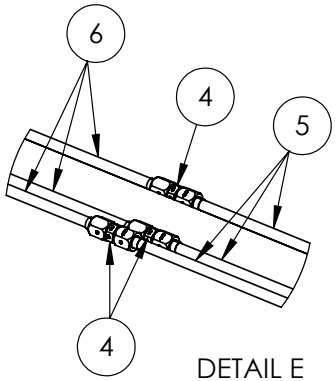

DETAIL E

IF DESCRIPTION PREFIX IS ASSEMBLY DRAWING ONLY OR PRODUCTION DRAWING ONLY THE ITEM IS NOT FOR SALE			
ITEM	PART NUMBER	DESCRIPTION	QTY
1	GA5011389	BOLT M6 X 120 GR8.8 ZP	2
2	GA0500085	BOLT M6 X 60 SS	12
3	GA4950605	BOOM POLY ASSEMBLY, 36M, INNER SECTION, BOOM RECIRCULATION,RIVX	1
4	GA3500202	HYDRAULIC ADAPTOR NIPPLE. 9/16" JIC TO 9/16" JIC, S17-0909	3
5	GA3500696	HYDRAULIC TUBE, 3/8" TUBE, 9/16" JIC FEMALE ENDS, BOOM SECTION B, TRITECH, MY20	3
6	GA3500695	HYDRAULIC TUBE, 3/8" TUBE, 9/16" JIC FEMALE ENDS, BOOM SECTION A, TRITECH, MY20	3
7	GA3500707	MOUNTING CLAMP, JAW, SINGLE, GROUP 5, 33.7mm CENTRE WITH 3 X 10mm	14
8	GA5078070	MOUNTING CLAMP, SINGLE TYPE, JAW, PAIR, GROUP 5, 38mm, RCS-38J	1
9	GA5078075	MOUNTING CLAMP, SINGLE TYPE, PLATE, TOP, GROUP 5, RCS-5PT	1
10	GA4406140	PLATE, BOOM PLUMBING AND HYDRAULIC LINE CLAMP, TOP PLATE	7
11	GA5004437	WASHER 6mm FLAT SS	14
12	GA5004447	WASHER M6 SPRING SS	14
GA4950720-02 GOLDACRES	ASSEMBLY DRAWING ONLY, BOOM INNER ASSEMBLY, 36M LH, RIVX SERIES 2 MY21		REV 09

Nudge Bar, Inner, 36mt

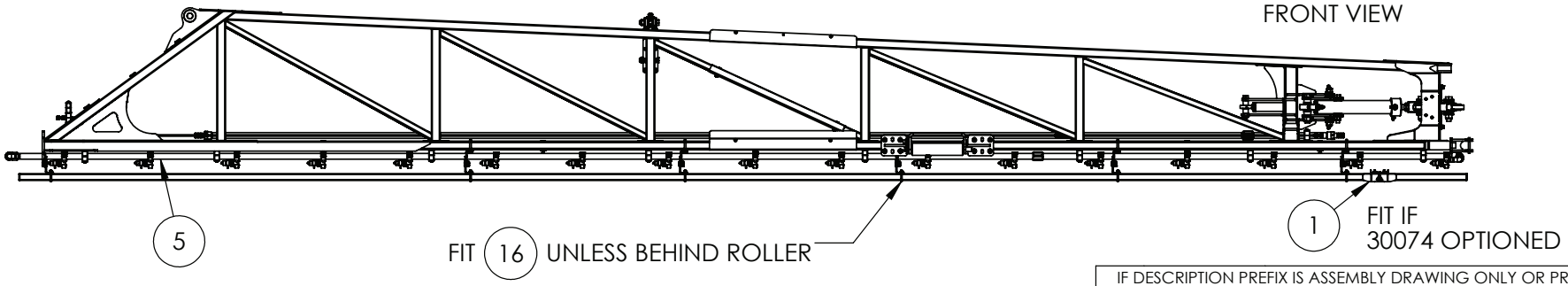

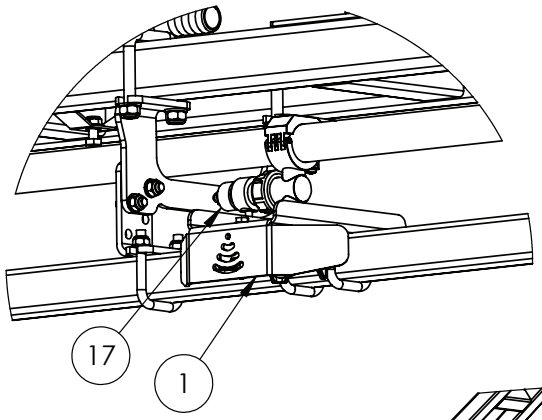

ITEM 1 RAVEN XRT

MOUNTING BRACKET IS POSITIONED AS CLOSE AS POSSIBLE TO NUDGE BAR MOUNTING BRACKET.

FIT IF
30074 OPTIONED

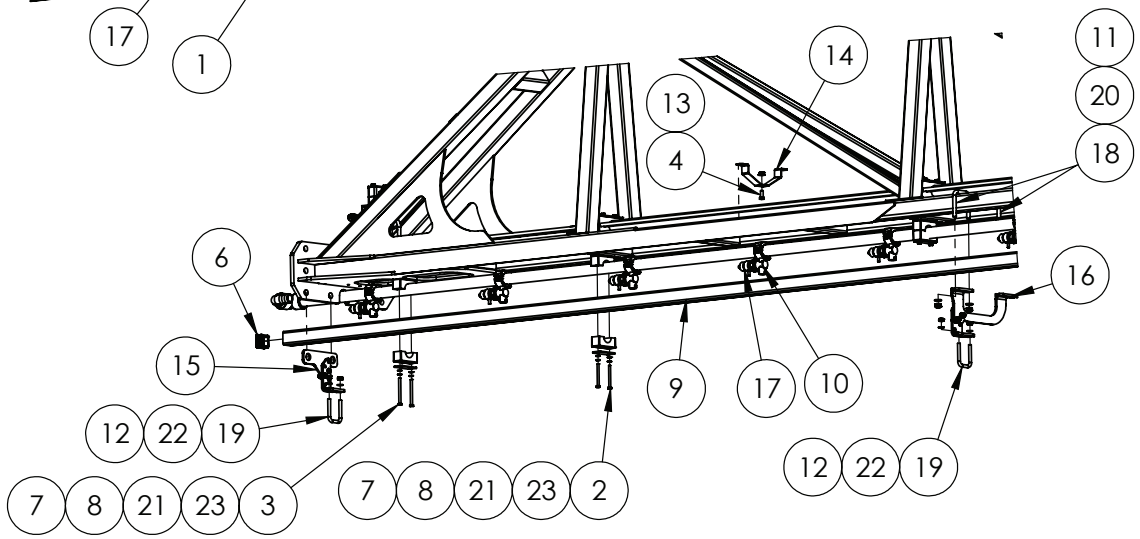

IF DESCRIPTION PREFIX IS ASSEMBLY DRAWING ONLY OR PRODUCTION DRAWING ONLY THE ITEM IS NOT FOR SALE			
ITEM	PART NUMBER	DESCRIPTION	QTY
1	GA4912625	ASSEMBLY DRAWING ONLY, BRACKET, SENSOR, RAVEN XRT 107-0235-001	1
2	GA0500116	BOLT M6 X 65 SS A2-70	14
3	GA0500115	BOLT M6 X 75 SS A2-70	2
4	GA5004085	BOLT M8 X 20 GR8.8 ZP	6
5	GA4950130	BOOM POLY ASSEMBLY. BARE, 36M. LH INNER SECTION, DRILLED 500mm BROADACRE,TRITECH	1
6	GA5002963	INSERT 38X38MM CAP	2
7	GA3500699	MOUNTING CLAMP, SINGLE TYPE, JAW, PAIR, GROUP 5, 33.7mm, RCS-33.5J	8
8	GA5078075	MOUNTING CLAMP, SINGLE TYPE, PLATE, TOP, GROUP 5, RCS-5PT	8
9	GA4553237	NUDGE BAR, 36M INNER, RIVX	1
10	GA5077962	NOZZLE BODY, SINGLE, 1", TEEJET, QJ17560A-1-NYB	17
11	GA5051445	NUT M10 NYLOC SS	20
12	GA5052590	NUT M8 NYLOC SS	12
13	GA5070710	NUT WITH FLANGE, PLASTIC, M8 X 1.25	6
14	GA4411215	PLATE, BOOM POLY SUPPORT MOUNT, INNER WING, TRITECH, MY21	6
15	GA4953950	PRODUCTION DRAWING ONLY, NOZZLE GUARD MOUNT, RIVX BOOM, INNER	1
16	GA4953945	PRODUCTION DRAWING ONLY, NOZZLE GUARD MOUNTING, RIVX BOOM, INNER	5
17	GA5065520	SPRAY STOP, RAPIDFIRE, SUIT TEEJET NOZZLE BODY, ALTEK	17
18	GA5053645	U BOLT SQUARE TOP M10 X 52 X 75	10
19	GA0500084	U BOLT SQUARE TOP M8 X 42 X 65, 304 SS	6
20	GA5000117	WASHER 10mm FLAT SS HD	20
21	GA5004437	WASHER 6mm FLAT SS	16
22	GA5003643	WASHER 8mm FLAT SS HD	12
23	GA5004447	WASHER M6 SPRING SS	16
GA4950720-02 GOLDACRES		ASSEMBLY DRAWING ONLY, BOOM INNER ASSEMBLY, 36M LH, RIVX SERIES 2 MY21	REV 09

Nudge Bar, Outer, 36mt

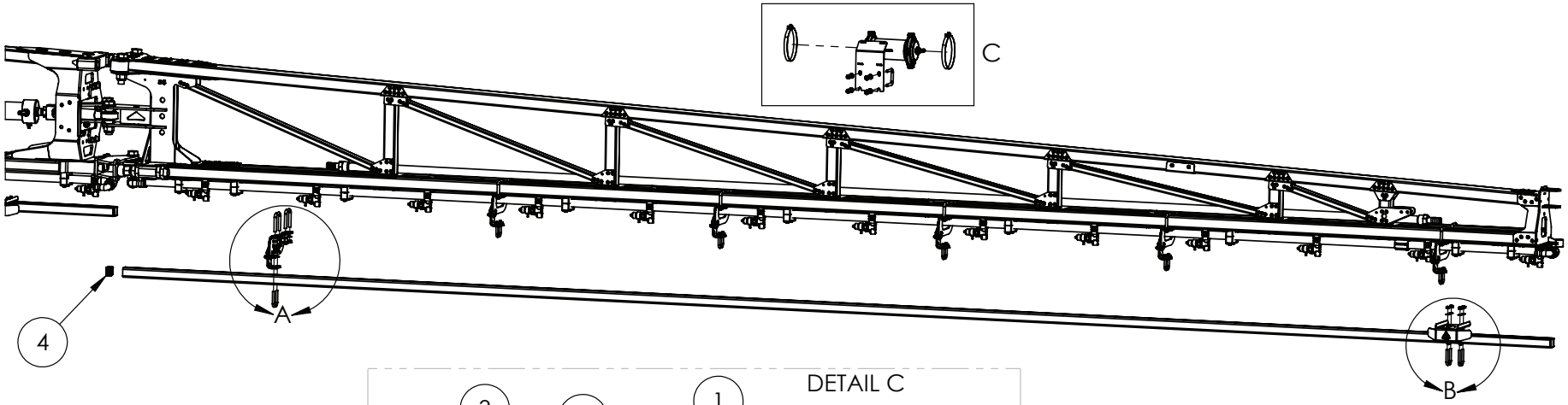

**ONLY FITTED IF 30074 OPTIONED

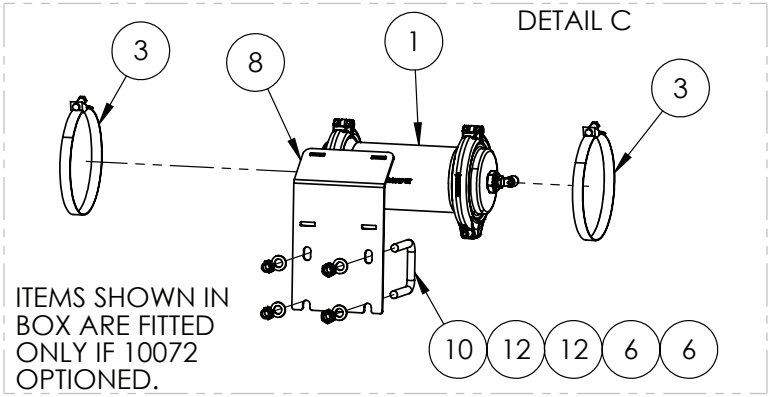

ITEMS SHOWN IN BOX ARE FITTED ONLY IF 10072 OPTIONED.

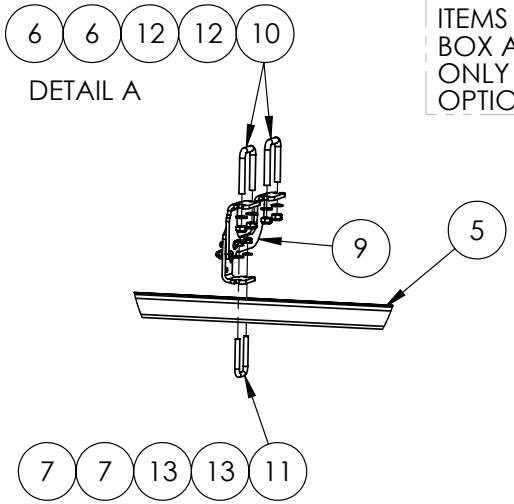

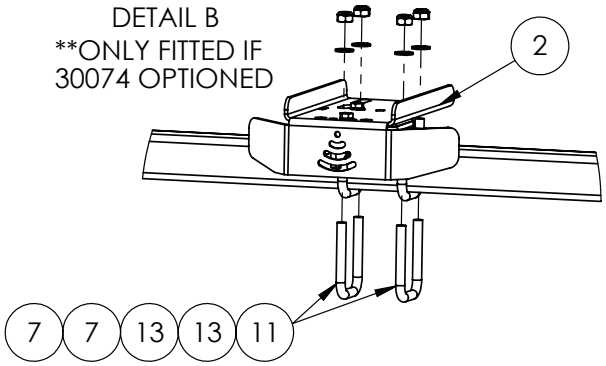

IF DESCRIPTION PREFIX IS ASSEMBLY DRAWING ONLY OR PRODUCTION DRAWING ONLY THE ITEM IS NOT FOR SALE			
ITEM	PART NUMBER	DESCRIPTION	QTY
1	GA4949330	AIR TANK, 0.9L, PLASTIC, 10 BAR, SUIT RAPID FIRE 3TS PRO	1
2	GA4912625	ASSEMBLY DRAWING ONLY, BRACKET, SENSOR, RAVEN XRT 107-0235-001	1
3	GA5053945	HOSE CLAMP 51mm-130mm - QUICK RELEASE	2
4	GA5002963	INSERT 38X38MM CAP	2
5	GA4702475	NUDGE BAR, 36M OUTER, RIVX	1
6	GA5051445	NUT M10 NYLOC SS	28
7	GA5052590	NUT M8 NYLOC SS	16
8	GA4414755	PLATE, MOUNT BOOM, 3TS PRO AIR TANK	1
9	GA4953940	PRODUCTION DRAWING ONLY, NOZZLE GUARD MOUNTING, RIVX BOOM, OUTER	6
10	GA5053645	U BOLT SQUARE TOP M10 X 52 X 75	14
11	GA0500084	U BOLT SQUARE TOP M8 X 42 X 65, 304 SS	8
12	GA5000117	WASHER 10mm FLAT SS HD	28
13	GA5003643	WASHER 8mm FLAT SS HD	16
GA4950720-04 GOLDACRES	ASSEMBLY DRAWING ONLY, BOOM OUTER ASSEMBLY, 36M LH, RIVX SERIES 2 MY21		REV 04.A

Poly Clamp, Recirculation, 36mt, Outer

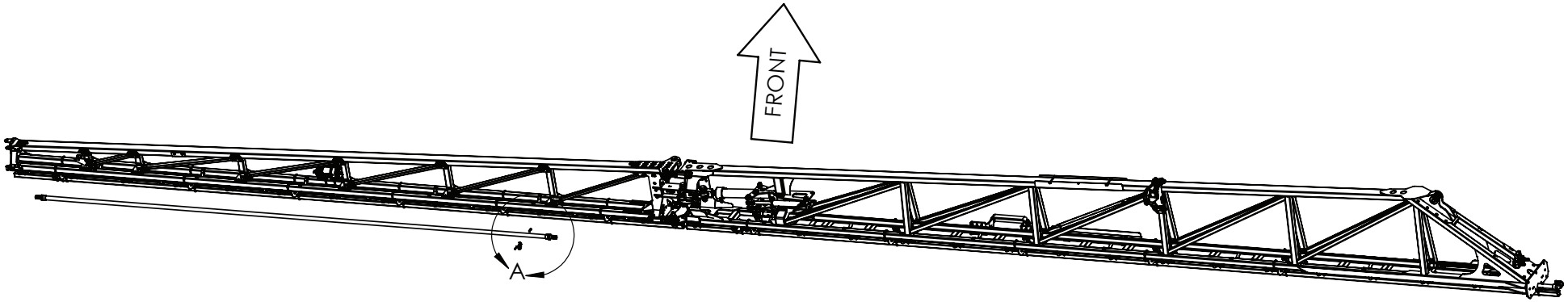

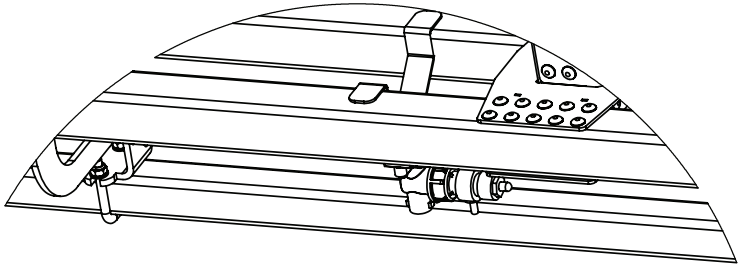

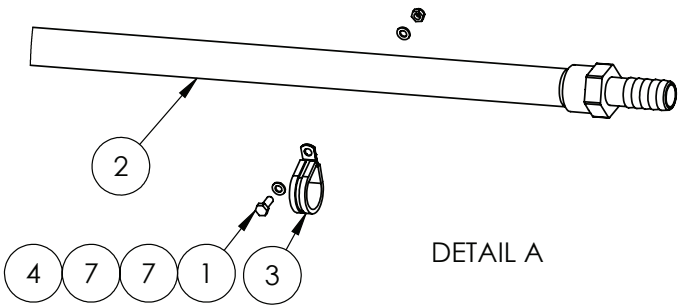

DETAIL A

IF DESCRIPTION PREFIX IS ASSEMBLY DRAWING ONLY OR PRODUCTION DRAWING ONLY THE ITEM IS NOT FOR SALE			
ITEM	PART NUMBER	DESCRIPTION	QTY
1	GA5011395	BOLT M6 X 16 SS A2-70	6
2	GA4950635	BOOM POLY, 1IN 30M, INNER SECTION, BOOM RECIRCULATION, RIVX	1
3	GA5048090	CLAMP P 35mm 56487	6
4	GA5048115	NUT M6 NYLOC ZP	6
5	GA5052590	NUT M8 NYLOC SS	4
6	GA0500084	U BOLT SQUARE TOP M8 X 42 X 65, 304 SS	2
7	GA5004437	WASHER 6mm FLAT SS	12
8	GA5003643	WASHER 8mm FLAT SS HD	4
GA4950720-04 GOLDACRES		ASSEMBLY DRAWING ONLY, BOOM OUTER ASSEMBLY, 36M LH, RIVX SERIES 2 MY21	REV 04.A

Breakaway Assembly, RIVX

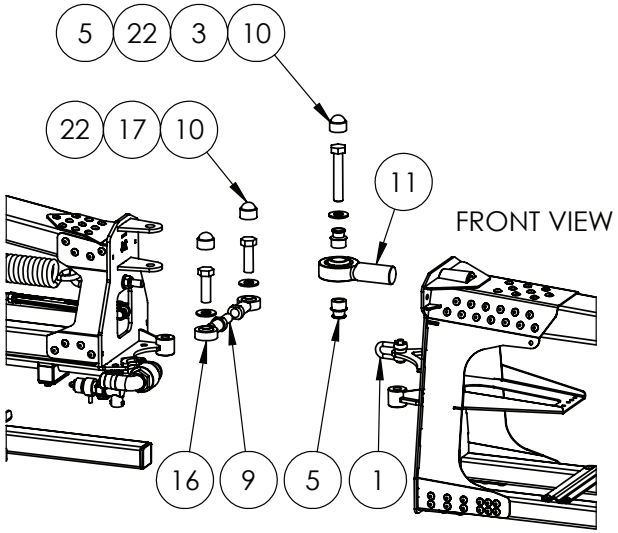

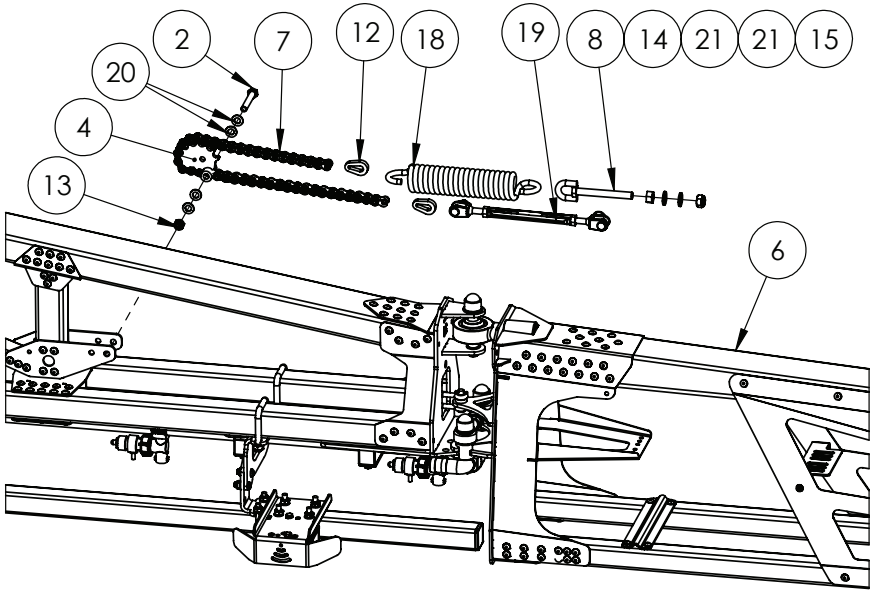

IF DESCRIPTION PREFIX IS ASSEMBLY DRAWING ONLY OR PRODUCTION DRAWING ONLY THE ITEM IS NOT FOR SALE			
ITEM	PART NUMBER	DESCRIPTION	QTY
1	GA5071060	10mm UTILITY CLEVIS 24CST002	1
2	GA5011163	BOLT M10 X 70 GR8.8 ZP	1
3	GA5011297	BOLT M16 X 90 GR8.8 ZP	1
4	GA4659800	BREAK AWAY CENTRE PIVOT FAB ASSEM	1
5	GA4552225	BREAKAWAY ROSE END SPACER BUSH 3D 2.0	2
6	GA4951555	BREAKAWAY TIP ASSEMBLY 2M, BARE, RIVX, MY22	1
7	GA5068985	CHAIN, 5/8", 41 PITCH BREAKAWAY HINGE	1
8	GA5075150	EYE BOLT 12mm X 100mm SHORT	1
9	GA5071105	GRUB SCREW M16 X 50	1
10	GA5075080	HEX NUT PROTECTION CAP SUIT M16 BLACK	3
11	GA5070530	LARGE ROSE END 1" X 1 1/4" UNF BB074-VM16	1
12	GA4505695	LINK PLATE CHAIN END	2
13	GA5051445	NUT M10 NYLOC SS	1
14	GA5000559	NUT M12 HEX ZP	1
15	GA5012461	NUT M12 NYLOC ZP	1
16	GA5014469	ROD END FEMALE 16mm	2
17	GA5000933	SET SCREW M16 X 50 GR8.8 ZP	2
18	GA5025170	SPRING, TENSION, 50 OD X 260 LONG X 9mm, BREAKAWAY, MY20	1
19	GA5070505	TURNBUCKLE, S/S 10.mm JAW/JAW	1
20	GA5000117	WASHER 10mm FLAT SS HD	4
21	GA5000577	WASHER 12mm FLAT SS HD	2
22	GA5001043	WASHER 16mm FLAT SS HD	3
GA4950700-05 GOLDACRES	ASSEMBLY DRAWING ONLY. BOOM BREAKAWAY ATTACHMENT, 24M LH, RIVX SERIES 2 MY21		REV 01

Boom Rest, RIVX Roller

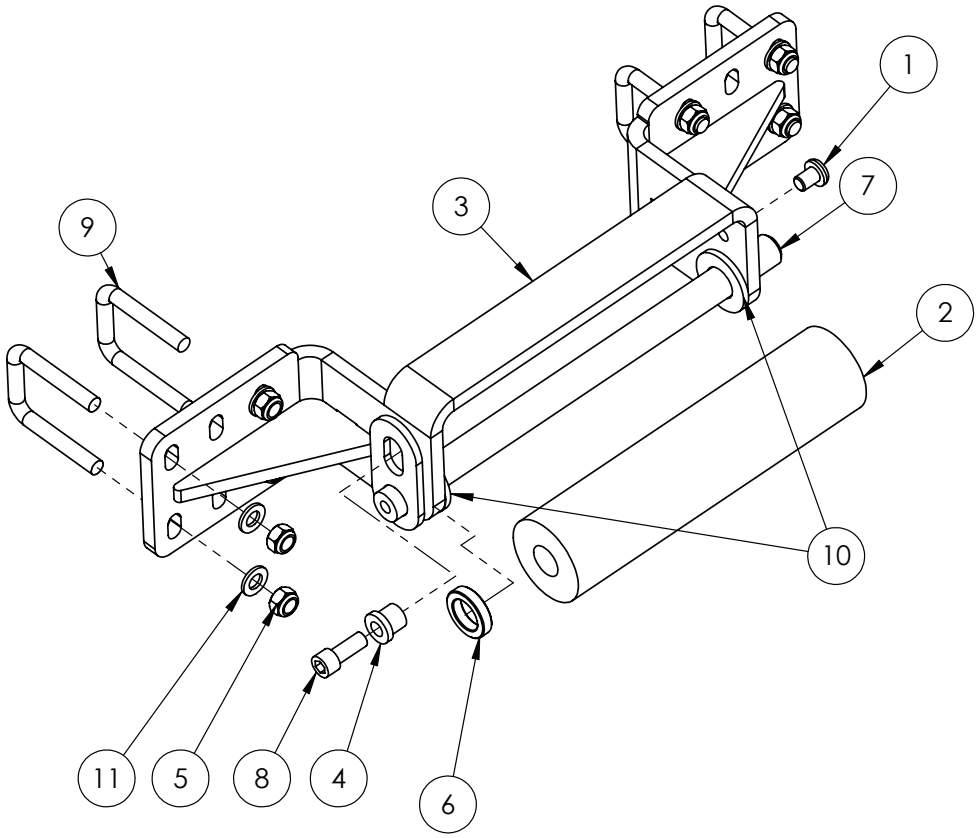

ITEM 6 FITTED ON SHAFT BETWEEN SHAFT PLATE & REST BODY

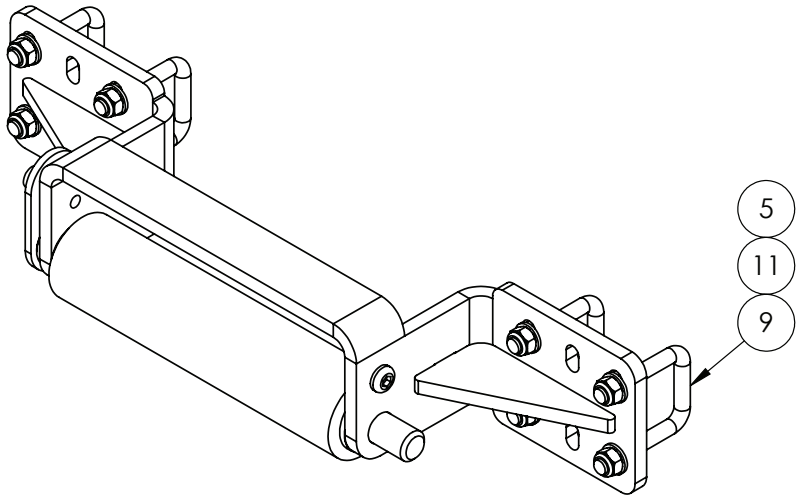

IF DESCRIPTION PREFIX IS ASSEMBLY DRAWING ONLY OR PRODUCTION DRAWING ONLY THE ITEM IS NOT FOR SALE			
ITEM	PART NUMBER	DESCRIPTION	QTY
1	GA5069890	BHCS M12 X 16 GR12.9 ZP	1
2	GA5070700	BOOM REST ROLLER, BLACK, 290mm LONG SUIT PRAIRIE	1
3	GA4603260	BOOM REST, RIVX ROLLER, PRAIRIE PRO, 2021	1
4	MACH0152	BUSH WITH SHOULDER, 12.3 ID X 25 OD X 21 LONG, SUIT PARALIFT PIN BOLTS	1
5	GA5001030	NUT M12 NYLOC GALVANISED	8
6	GA4572135	PARALIFT SPACER BUSH	1
7	GA4658745	PIN - SUIT BOOM REST ROLLER	1
8	GA5000307	SHCS M12 X 30 GR12.9 ZP	1
9	GA5011251	U BOLT SQUARE TOP M12 X 52mm X 80mm	4
10	GA5017659	WASHER 1 FLAT ZP HD (5mm THICK)	2
11	GA5000577	WASHER 12mm FLAT SS HD	8
GA4951165 GOLDACRES		SUB ASSEMBLY, BOOM REST, RIVX ROLLER, PRAIRIE PRO, 2021	REV 01

Boom Wings, 48mtr

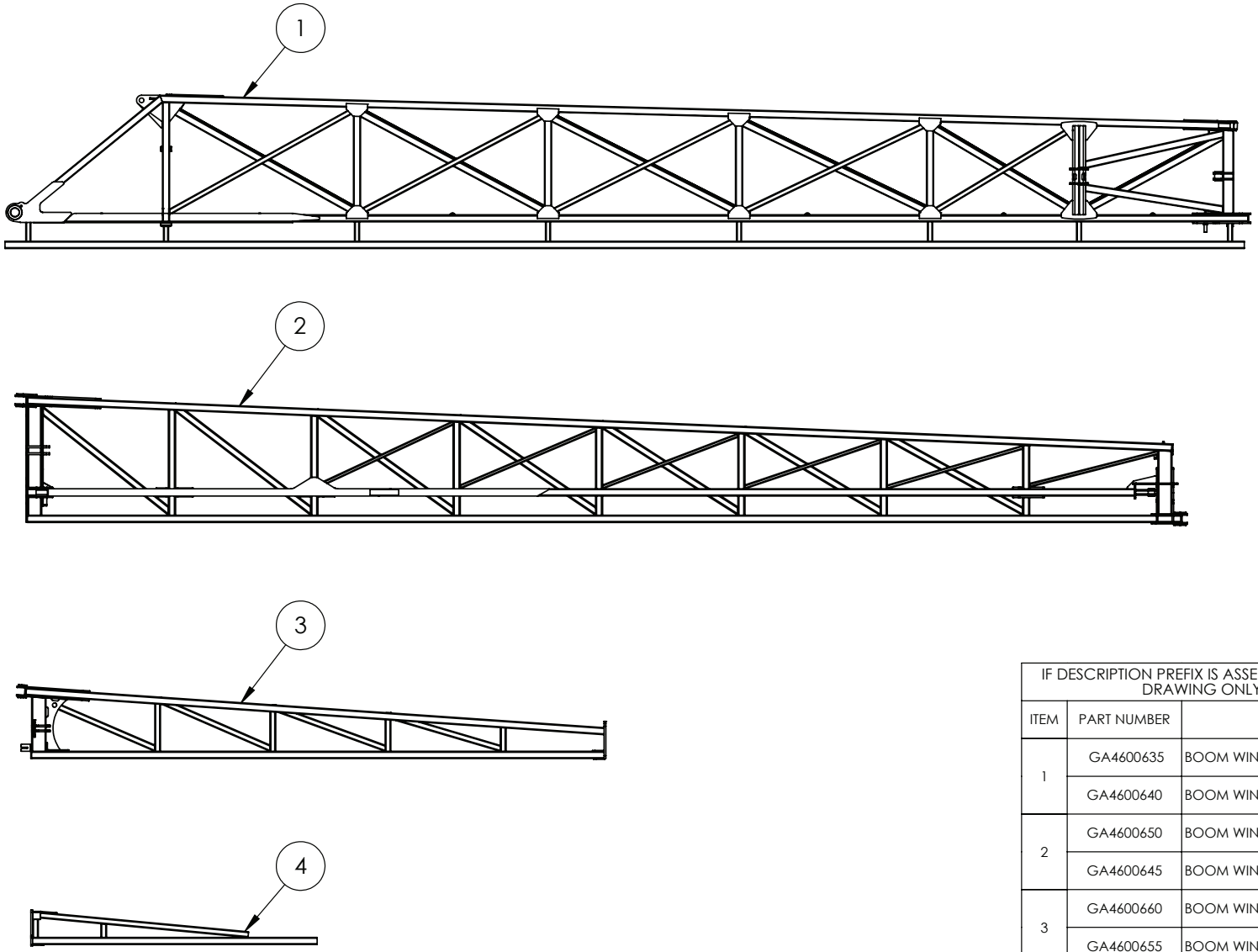

IF DESCRIPTION PREFIX IS ASSEMBLY DRAWING ONLY OR PRODUCTION DRAWING ONLY THE ITEM IS NOT FOR SALE			
ITEM	PART NUMBER	DESCRIPTION	QTY
1	GA4600635	BOOM WING, INNER, 48M, LH, STEEL	1
	GA4600640	BOOM WING, INNER, 48M, RH, STEEL	
2	GA4600650	BOOM WING, MID, 48M, RH, ALUMINIUM	1
	GA4600645	BOOM WING, MID, 48M, LH, ALUMINIUM	1
3	GA4600660	BOOM WING, OUTER, 48M, RH, ALUMINIUM	1
	GA4600655	BOOM WING, OUTER, 48M, LH, ALUMINIUM	1
4	GA4656123	ALUM BREAKAWAY 2M, SUIT 3D BREAKAWAY 2.0	1
GA7800103 GOLDACRES		BOOM WINGS, 48MT	REV 00

Boom, Inner, Mounting Hardware, 48mt

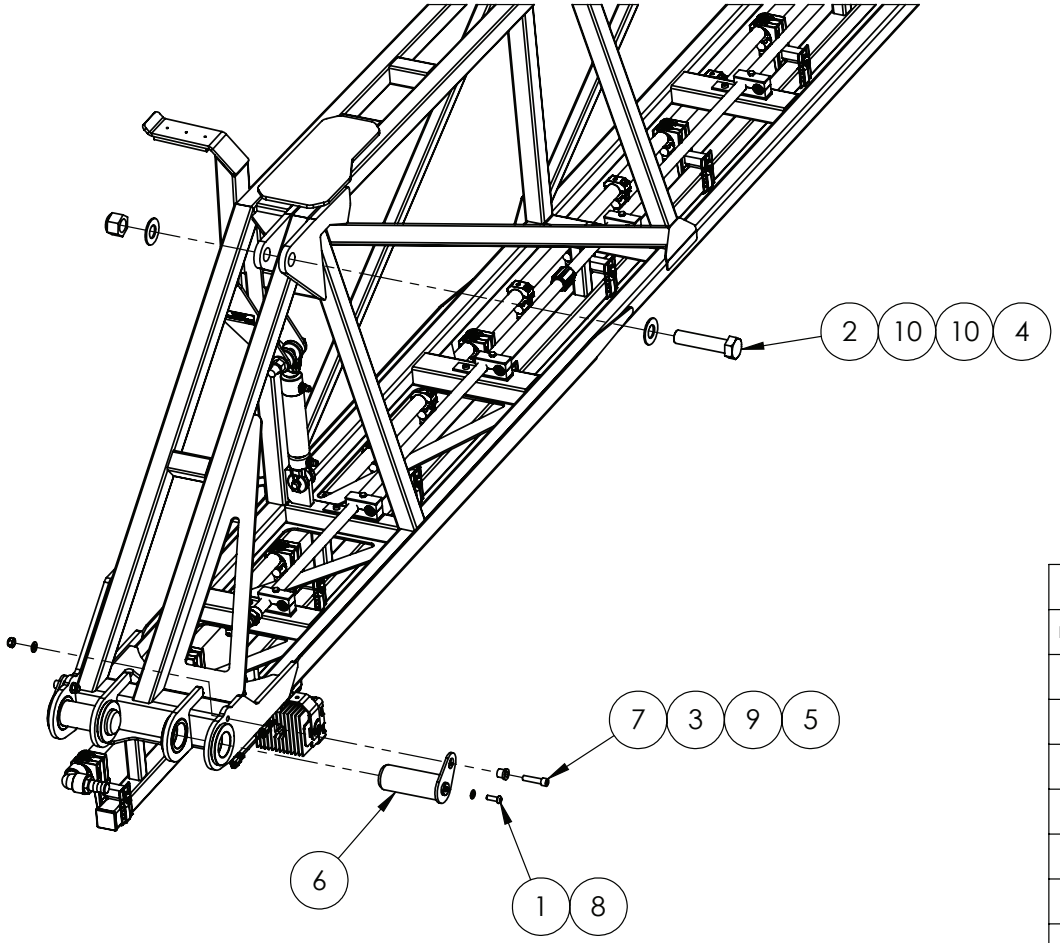

IF DESCRIPTION PREFIX IS ASSEMBLY DRAWING ONLY OR PRODUCTION DRAWING ONLY THE ITEM IS NOT FOR SALE			
ITEM	PART NUMBER	DESCRIPTION	QTY
1	GA5048120	BHCS M10 X 30 SS A2-70	2
2	GA0500073	BOLT, 1 1/4" X 5 1/2" UNC, ZP, GR8	1
3	MACH0152	BUSH WITH SHOULDER, 12.3 ID X 25 OD X 21 LONG, SUIT PARALIFT PIN BOLTS	2
4	GA0500071	NUT 1 1/4", NYLOC, ZP, UNC	1
5	GA5012461	NUT M12 NYLOC ZP	2
6	GA4600625	PIN, BOOM TILT PIVOT, 60mm OD, FABRICATED, 48M	2
7	GA0500052	SHCS, M12 X 50 GR10.9, ZP	2
8	GA5000117	WASHER 10mm FLAT SS HD	2
9	GA5000577	WASHER 12mm FLAT SS HD	2
10	GA0500072	WASHER, 1 1/4", FLAT, OD 66 X ID 33.3 X 5mm, ZP	2
GA4951600-11 GOLDACRES		ASSEMBLY DRAWING ONLY, BOOM WING, 48M LH	REV 00

Boom Catch, 48mt

NOTE:

G8 ITEM (8) FITTED

G6/PRAIRIE PRO ITEM (6) FITTED

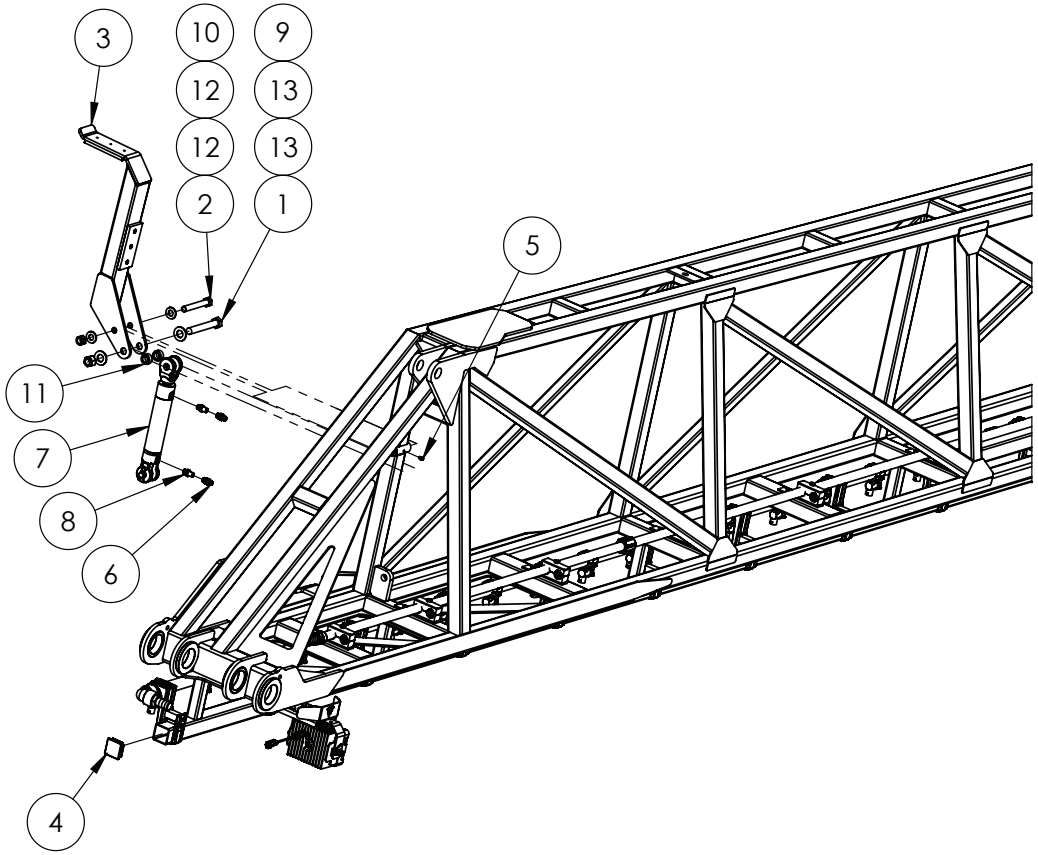

IF DESCRIPTION PREFIX IS ASSEMBLY DRAWING ONLY OR PRODUCTION DRAWING ONLY THE ITEM IS NOT FOR SALE			
ITEM	PART NUMBER	DESCRIPTION	QTY
1	GA5070335	BOLT 3/4 UNC X 5 1/2 GR8 ZP	1
2	GA5011275	BOLT M16 X 120 GR8.8 ZP	1
3	GA4949075	BOOM CATCH ASSEMBLY, 48M BOOM	1
4	GA5024720	END CAP, PLASTIC, BLACK, INSERT, RHS. 50 X 50, 2.4 - 4.0mm WALL	2
5	GA5012203	GREASE NIPPLE, SHORT, 1/4 UNF, MACH0207	1
6	GA3500146	HYDRAULIC ADAPTOR, 9/16" JICM, 9/16" UNOM, S90-0909, RYCO	2
7	GA3500601	HYDRAULIC CYLINDER , DOUBLE ACTING, 1.5" BORE, 0.875" ROD, 4" STROKE	1
8	GA3500358	HYDRAULIC ADAPTOR, NIPPLE, 1/4" BSPT MALE X 9/16" UN MALE O-RING	2
9	GA5048430	NUT 3/4 UNC NYLOC ZP	1
10	GA5001029	NUT M16 NYLOC ZP	1
11	GA4553270	SPACER, ID19.5, OD40, 48m BOOM CATCH RAM SPACER	2
12	GA5001043	WASHER 16mm FLAT SS HD	2
13	GA5001045	WASHER, 3/4" FLAT, HD ZP	2
GA4951600-06 GOLDACRES		ASSEMBLY DRAWING ONLY, BOOM WING, 48M LH	REV 01.L

Boom Catch Arm Assembly, 48mt

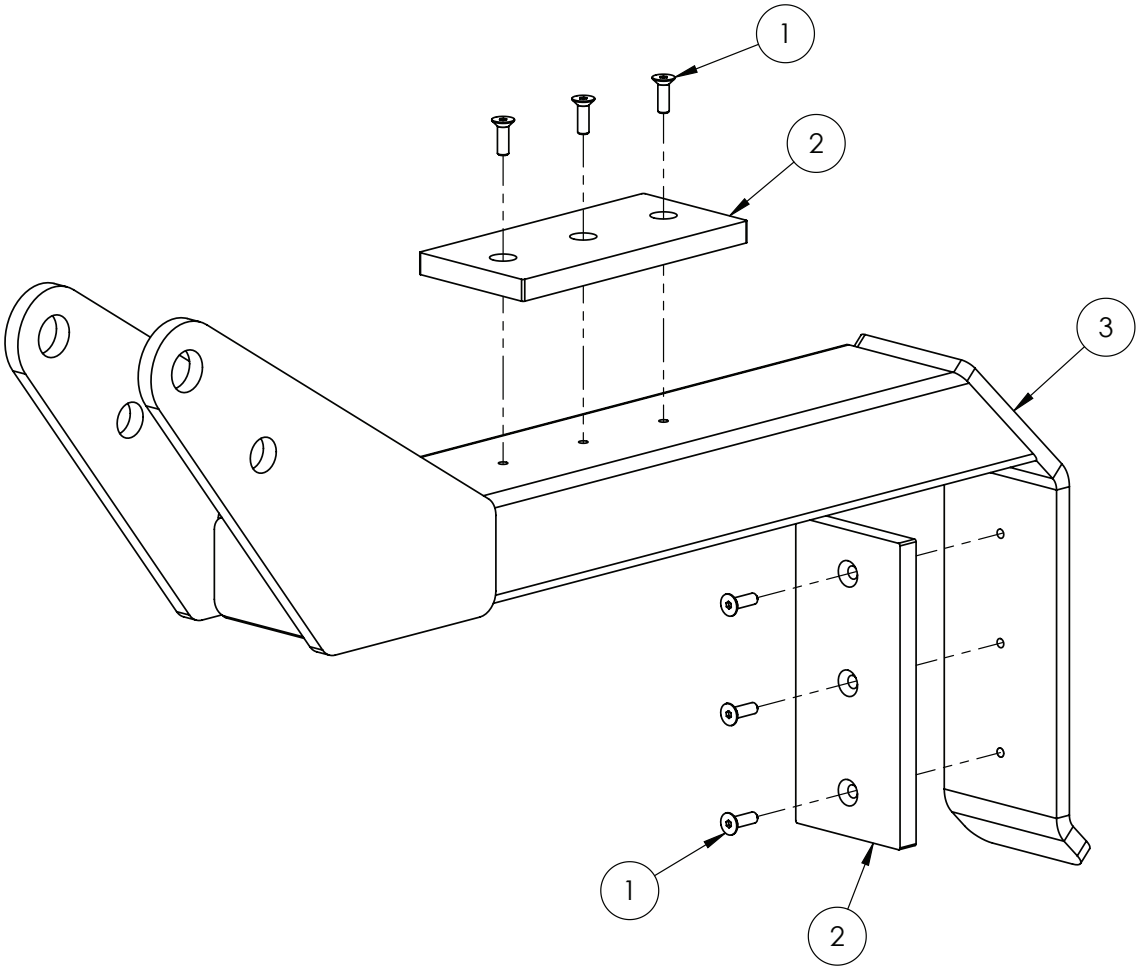

IF DESCRIPTION PREFIX IS ASSEMBLY DRAWING ONLY OR PRODUCTION DRAWING ONLY THE ITEM IS NOT FOR SALE			
ITEM	PART NUMBER	DESCRIPTION	QTY
1	GA5051230	CSCS M5 X 16 SS A2-70	6
2	GA5072450	PLASTIC WEAR STRIP BOOM REST POLYSTONE 7000SR 65 X 140 X 10mm	2
3	GA4600730	TRANSPORT CATCH ARM, 48M BOOM	1
GA4949075 GOLDACRES		BOOM CATCH ASSEMBLY, 48M BOOM	REV 00

Second Stage Fold, 48mt

NOTE:

IF G8 FIT ITEM 13

IF G6 OR PRAIRIE PRO FIT ITEM 14

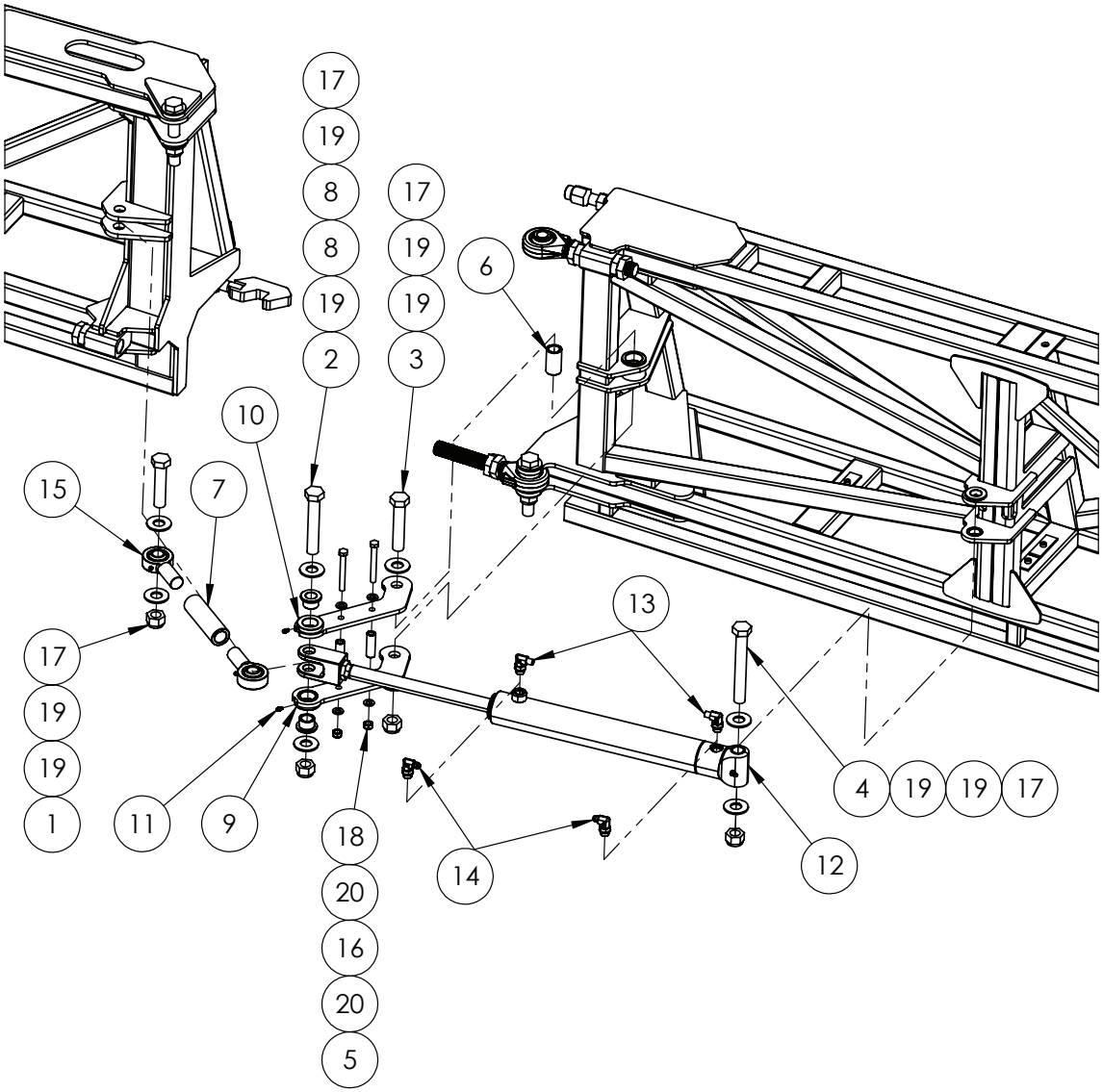

IF DESCRIPTION PREFIX IS ASSEMBLY DRAWING ONLY OR PRODUCTION DRAWING ONLY THE ITEM IS NOT FOR SALE			
ITEM	PART NUMBER	DESCRIPTION	QTY
1	GA5006149	BOLT 1 UNC X 4 1/2 GR8 ZP	1
2	GA5006033	BOLT 1" UNC X 6" ZP	1
3	GA5006031	BOLT 1" X 5" UNC GR8 ZP	1
4	GA5006037	BOLT 1" X 7.5" UNC GR8 ZP	1
5	GA5000259	BOLT M12 X 100 GR8.8 ZP	2
6	GA4550210	BUSH, FOLD LINK BOOM END, TRITECH BOOM 2015	1
7	GA4550230	BUSH, ROSE END LINK, 1 1/4"UNF, 150mm LONG, TRITECH BOOM 2015	1
8	GA4550205	FLANGE BUSH, ROD END PIVOT, TRITECH BOOM 2015	2
9	GA4601005	FOLD LINK A, TOP, ROD END, TRITECH BOOM 2015	1
10	GA4601010	FOLD LINK B, TOP, ROD END, TRITECH BOOM 2015	1
11	GA5012203	GREASE NIPPLE, SHORT, 1/4 UNF, MACH0207	2
12	GA3500060	HYDRAULIC CYLINDER, BORE 2.5", ROD 1.25", STROKE 400mm	1
13	GA3500348	HYDRAULIC ADAPTOR, ELBOW, 90 DEGREE, 1/4" BSPT MALE X 3/4" UN MALE O-RING	2
14	GA3500700	HYDRAULIC ADAPTOR, ELBOW, 90 DEGREE, 9/16" JIC MALE X 3/4" UN MALE O-RING, S91-0912	2
15	GA5070530	LARGE ROSE END 1" X 1 1/4" UNF BB074-VM16	2
16	GA4550215	LINK SPACER, TRITECH BOOM 2015	2
17	GA5012439	NUT 1" NYLOC UNC ZP	4
18	GA5012461	NUT M12 NYLOC ZP	2
19	GA5017659	WASHER 1 FLAT ZP HD (5mm THICK)	8
20	GA5000577	WASHER 12mm FLAT SS HD	4
GA4951600-04 GOLDACRES		ASSEMBLY DRAWING ONLY, BOOM WING, 48M LH	REV 00

Latch Assembly, Second Stage Fold, 48m

NOTE:
IF G8 FIT ITEM 6
IF G6 OR PRAIRIE PRO FIT
ITEM 4

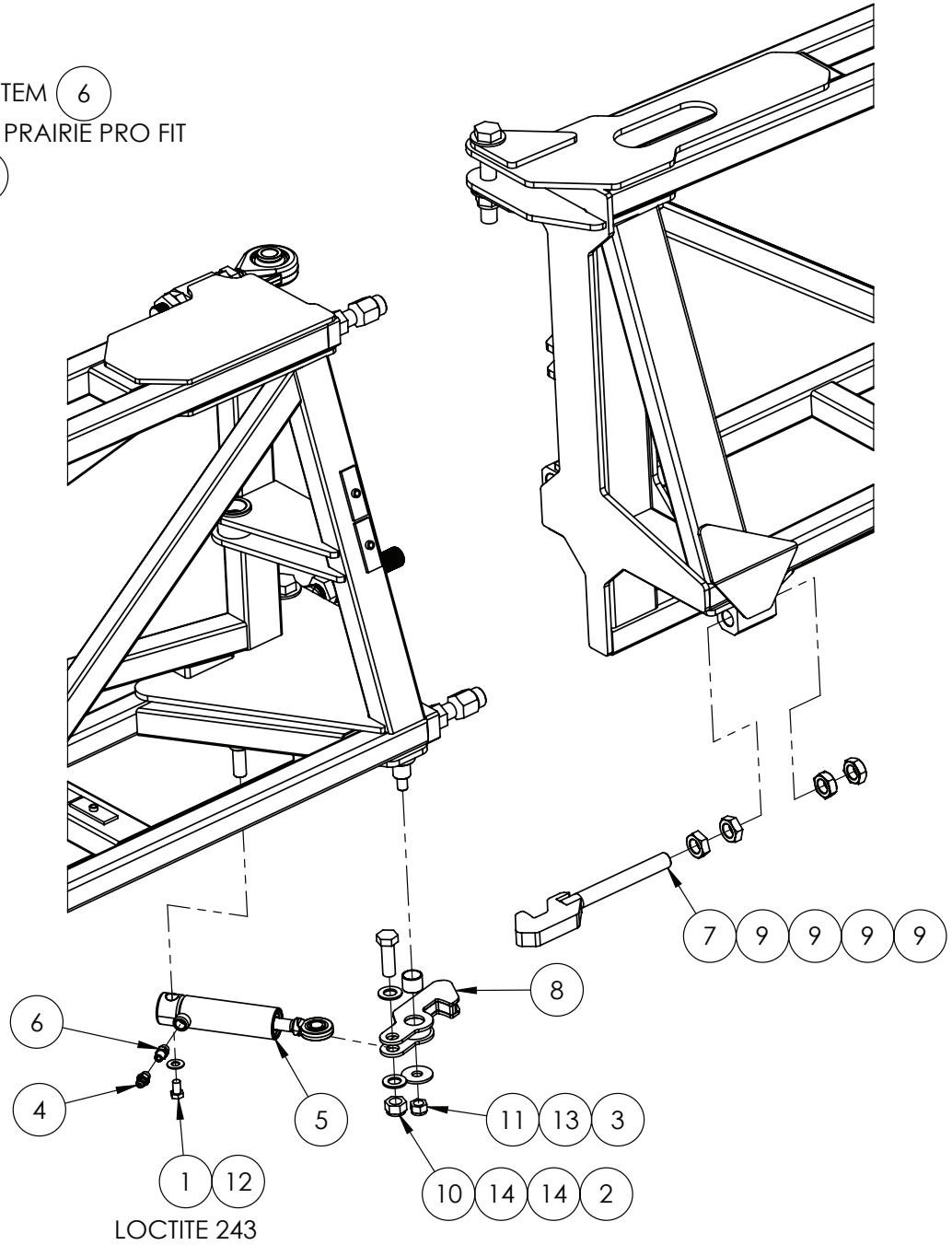

IF DESCRIPTION PREFIX IS ASSEMBLY DRAWING ONLY OR PRODUCTION DRAWING ONLY THE ITEM IS NOT FOR SALE			
ITEM	PART NUMBER	DESCRIPTION	QTY
1	GA5011227	BOLT M12 X 20 GR8.8 ZP	1
2	GA5011333	BOLT M20 X 60 GR8.8 ZP	1
3	GA5074375	GLACIER BUSH, 28 ID X 25 LONG, PG283225F	1
4	GA3500146	HYDRAULIC ADAPTOR, 9/16" JICM, 9/16" UNOM, S90-0909, RYCO	1
5	GA3500480	HYDRAULIC CYLINDER, BORE 1.5", ROD 0.75", STROKE 28mm, DISPLACEMENT, SPRING RETURN	1
6	GA3500358	HYDRAULIC ADAPTOR, NIPPLE, 1/4" BSPT MALE X 9/16" UN MALE O-RING	1
7	GA4600725	LATCH HOOK, ADJUSTER, 48m BOOM	1
8	GA4604055	LATCH HOOK, 28mm PIVOT, 48M BOOM, MY22	1
9	GA0500048	LOCK NUT, 1" UNF 12 TPI, ZP	4
10	GA5012467	M20 NYLOC NUT	1
11	GA5012463	NUT M16 NYLOC SS	1
12	GA5017673	WASHER 1/2" HIGH TENSILE	1
13	GA5011955	WASHER 16mm X 50 X 4 MUDGUARD ZP	1
14	GA5001741	WASHER 20mm FLAT SS HD	2
GA4951600-04 GOLDACRES		ASSEMBLY DRAWING ONLY, BOOM WING, 48M LH	REV 00

Rose Ends & Boom Stops, Second Stage Fold, 48m

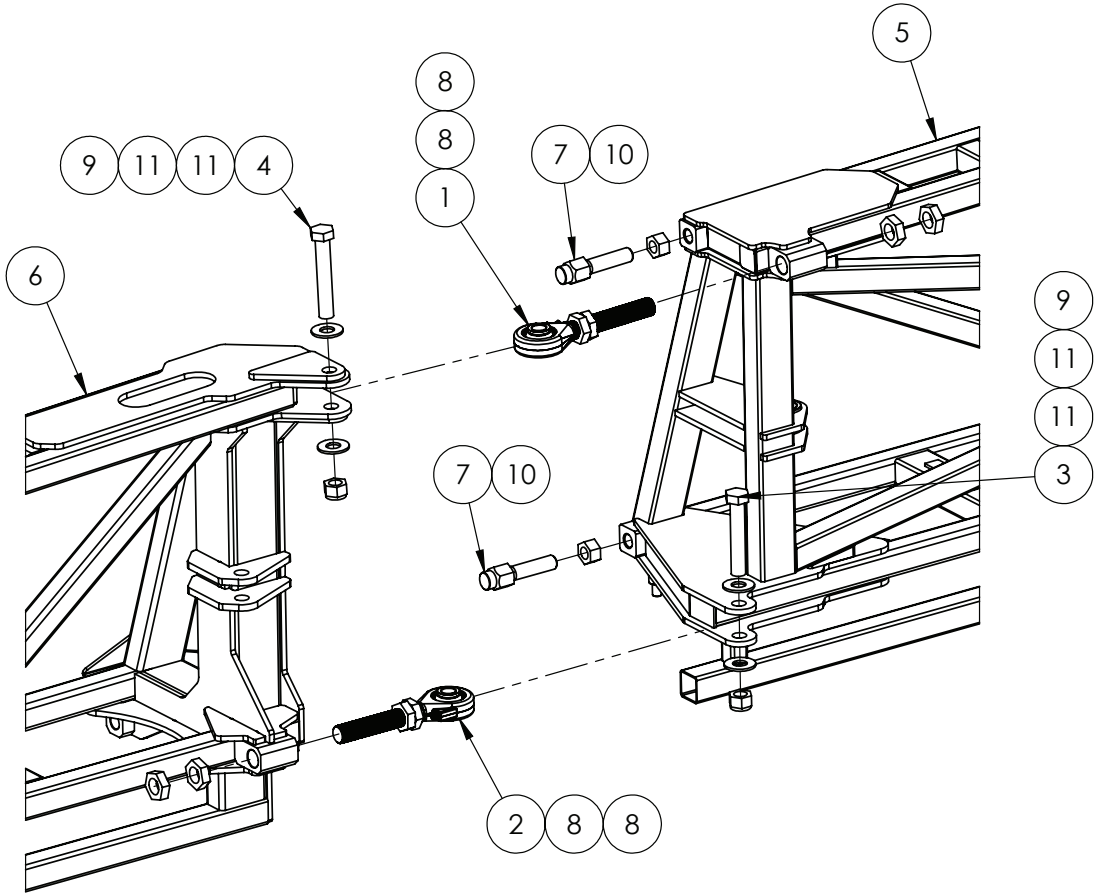

IF DESCRIPTION PREFIX IS ASSEMBLY DRAWING ONLY OR PRODUCTION DRAWING ONLY THE ITEM IS NOT FOR SALE			
ITEM	PART NUMBER	DESCRIPTION	QTY
1	GA4914385	ASSEMBLY DRAWING ONLY, ROSE END BEARING, BOOM 48M, FORGED, TOP	1
2	GA4914375	ASSEMBLY DRAWING ONLY, ROSE END BEARING, BOOM 48M, FORGED	1
3	GA5048175	BOLT 1 UNC X 5 1/2 GR8 ZP	1
4	GA5006033	BOLT 1" UNC X 6" ZP	1
5	GA4600635	BOOM WING, INNER, 48M, LH, STEEL	1
6	GA4603615	BOOM WING, MID, 48M, LH, ALUMINIUM, ANGLE OUTER FOLD	1
7	GA4572495	BOOM DRUM STOPPER BOLT 1" UNF 12 TPI	2
8	GA5010963	NUT 1 1/4 UNF 12 TPI ZP LOCK NUT	4
9	GA5012439	NUT 1" NYLOC UNC ZP	2
10	GA5010991	NUT, 1" UNF, 12 TPI, ZP	2
11	GA5017659	WASHER 1 FLAT ZP HD (5mm THICK)	4
GA4951600-04 GOLDACRES		ASSEMBLY DRAWING ONLY, BOOM WING, 48M LH	REV 00

Rose End Assembly, Forged, Top

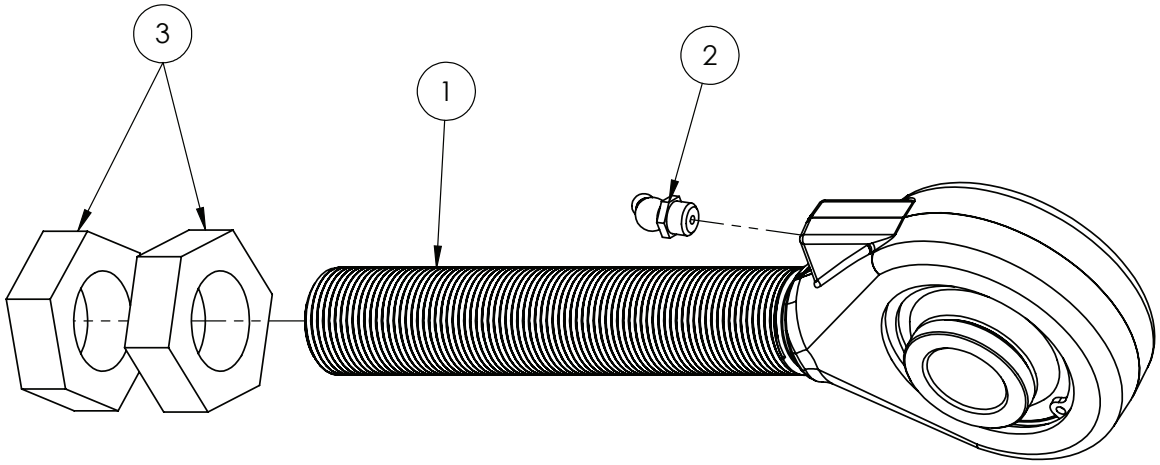

IF DESCRIPTION PREFIX IS ASSEMBLY DRAWING ONLY OR PRODUCTION DRAWING ONLY THE ITEM IS NOT FOR SALE			
ITEM	PART NUMBER	DESCRIPTION	QTY
1	GA5078654	BEARING END, ASSEMBLY, 1 1/4-12 UNF THREAD, C/W GEH 35 ES-2RS BEARING, BUSHED DIA. 25.5	1
2	GA5055125	GREASE NIPPLE, ELBOW, 45 DEGREE, 1/8 BSP MALE	1
3	GA5010963	NUT 1 1/4 UNF 12 TPI ZP LOCK NUT	2
GA4914385 GOLDACRES		ASSEMBLY DRAWING ONLY, ROSE END BEARING, BOOM 48M, FORGED, TOP	REV 00

Rose End Assembly, Forged, Bottom

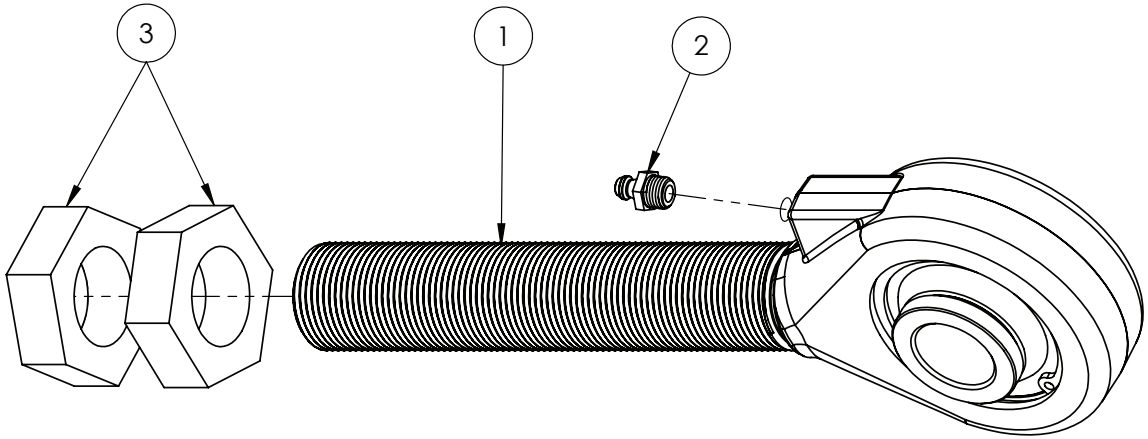

IF DESCRIPTION PREFIX IS ASSEMBLY DRAWING ONLY OR PRODUCTION DRAWING ONLY THE ITEM IS NOT FOR SALE			
ITEM	PART NUMBER	DESCRIPTION	QTY
1	GA5078654	BEARING END, ASSEMBLY, 1 1/4-12 UNF THREAD, C/W GEH 35 ES-2RS BEARING, BUSHED DIA. 25.5	1
2	GA5069980	GREASE NIPPLE, 1/8 BSPP, STRAIGHT	1
3	GA5010963	NUT 1 1/4 UNF 12 TPI ZP LOCK NUT	2
GA4914375 GOLDACRES		ASSEMBLY DRAWING ONLY, ROSE END BEARING, BOOM 48M, FORGED	REV 00

Rose End, Forged

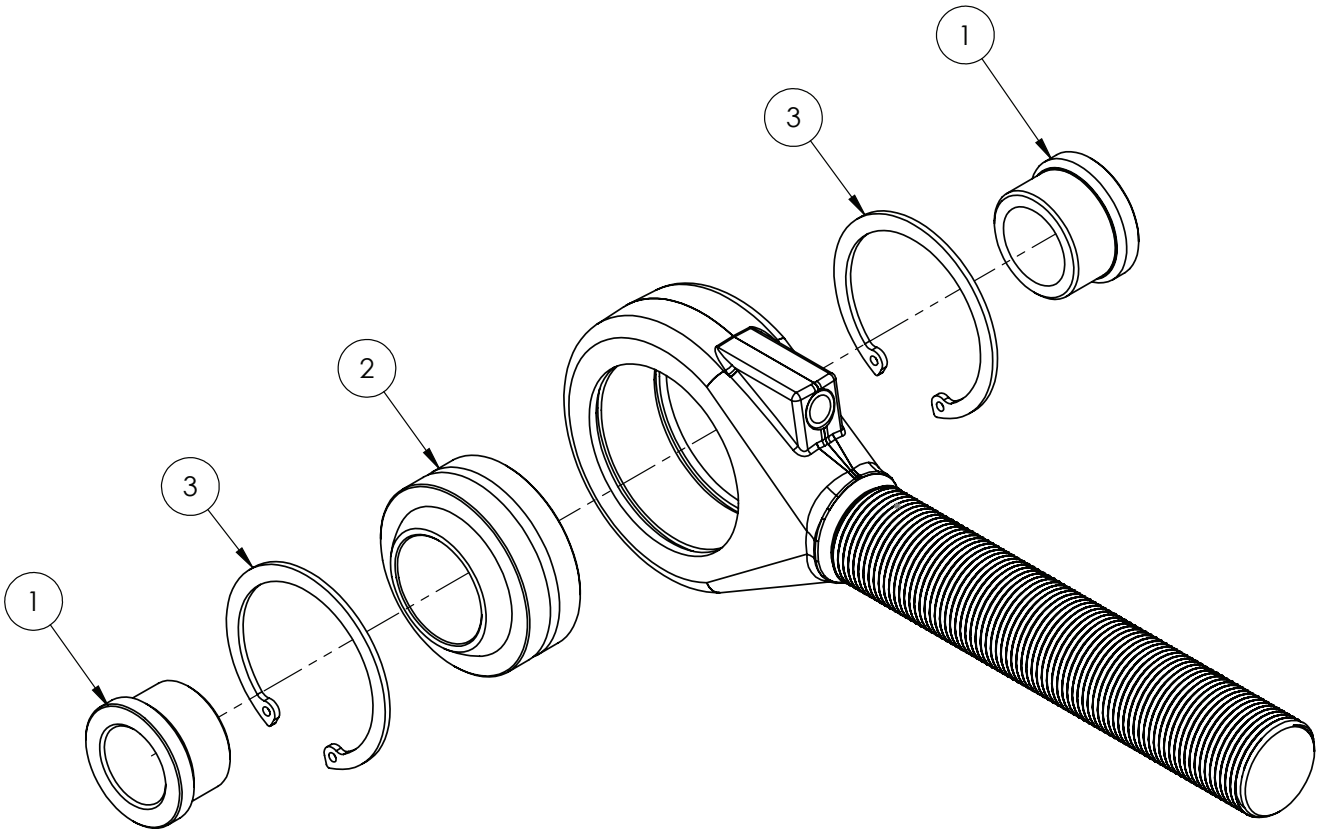

IF DESCRIPTION PREFIX IS ASSEMBLY DRAWING ONLY OR PRODUCTION DRAWING ONLY THE ITEM IS NOT FOR SALE			
ITEM	PART NUMBER	DESCRIPTION	QTY
1	GA4583505	BEARING BUSH, FLANGED, ID 25.5, OD 35	2
2	GA5078655	BEARING, RADIAL SPHERICAL PLAIN, ID 35, OD 62, NOMINAL WIDTH 35, GEH 35 ES-2RS	1
3	GA5078656	CIRCLIP, SUIT 62mm BORE, 62MM-INT	2
GA5078654 GOLDACRES		BEARING END, ASSEMBLY, 1 1/4-12 UNF THREAD, C/W GEH 35 ES-2RS BEARING, BUSHED DIA. 25.5	REV 00.D

Rose End Link, Heavy Duty, (Old Style)

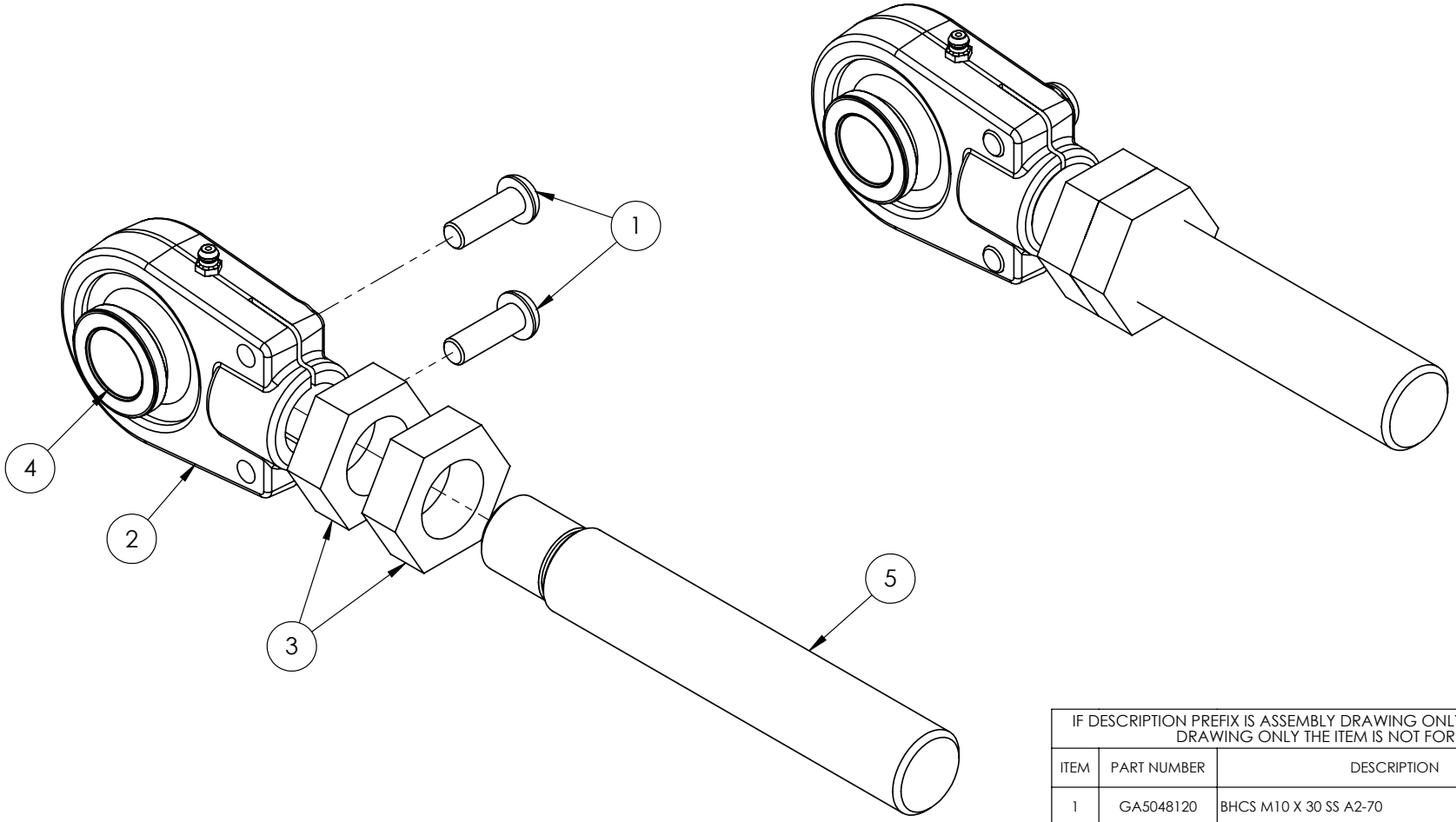

IF DESCRIPTION PREFIX IS ASSEMBLY DRAWING ONLY OR PRODUCTION DRAWING ONLY THE ITEM IS NOT FOR SALE			
ITEM	PART NUMBER	DESCRIPTION	QTY
1	GA5048120	BHCS M10 X 30 SS A2-70	2
2	GA5052965	HEAVY DELTA LINK ROSE END	1
3	GA5010963	NUT 1 1/4 UNF 12 TPI ZP LOCK NUT	2
4	GA5021925	SMALL BEARING BUSH, SUIT HYDRAULIC CYLINDER END, HYPOWER, R-10424	2
5	GA4550645	THREADED BOOM PIVOT ADJUSTER, 1 1/4" UNF AND M28 THREADS, 48m BOOM	1
GA7800137 GOLDACRES		BEARING END WITH 1 1/4" UNF THREADED ADJUSTER ASSEMBLY, BOOM HINGE	REV 01

Boom Protectors, 48m

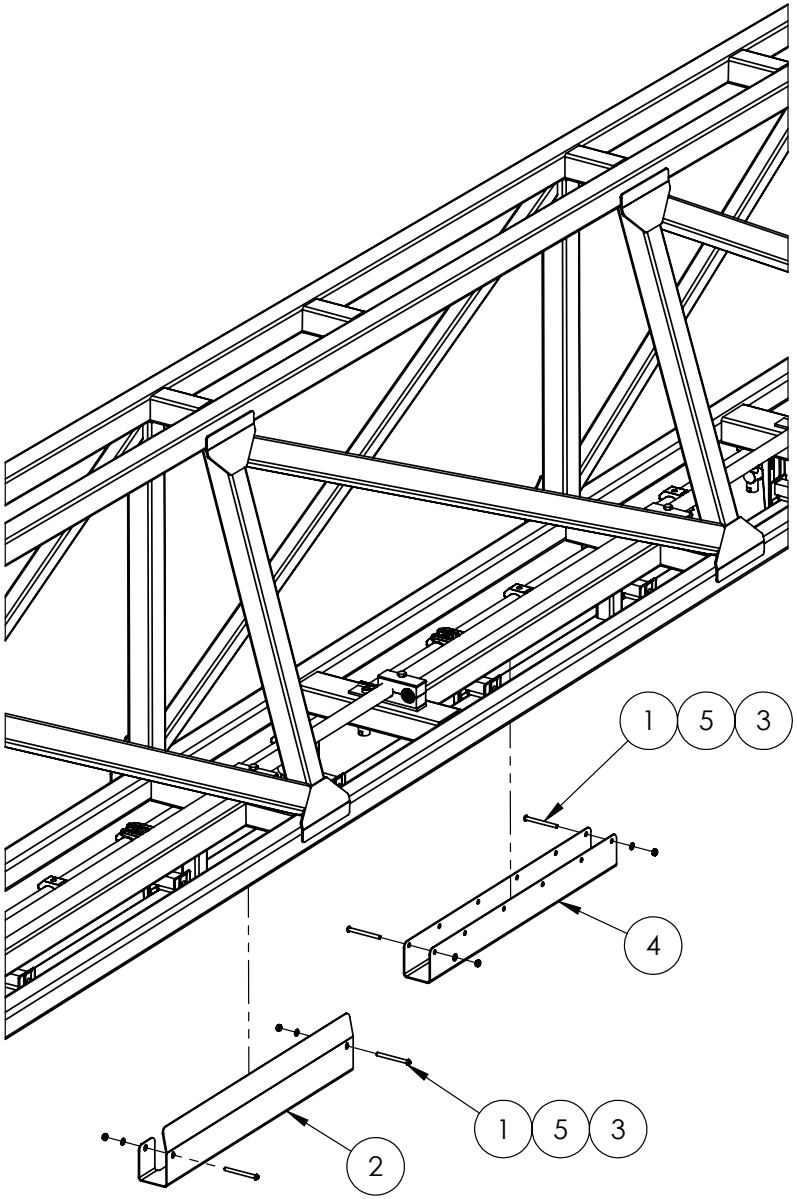

IF DESCRIPTION PREFIX IS ASSEMBLY DRAWING ONLY OR PRODUCTION DRAWING ONLY THE ITEM IS NOT FOR SALE			
ITEM	PART NUMBER	DESCRIPTION	QTY
1	GA0500067	BHCS M6 X 65 GR12.9 ZP	4
2	GA4402215	BOOM PROTECTOR SS FITS OVER GUSSET MY17	1
3	GA5048115	NUT M6 NYLOC ZP	4
4	F70799A	PROTECTOR, BOOM CORD, SUIT 50 X 50, 600mm, SS	1
5	GA5004437	WASHER 6mm FLAT SS	4
GA4951600-06 GOLDACRES		ASSEMBLY DRAWING ONLY, BOOM WING, 48M LH	REV 01

Boom Protector Position, Large, 48mt

PRAIRIE PRO

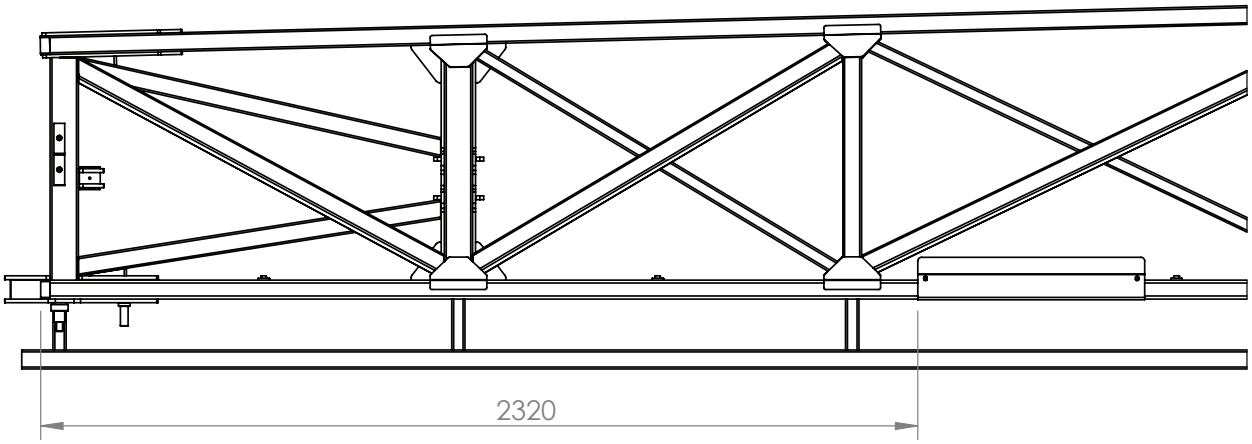

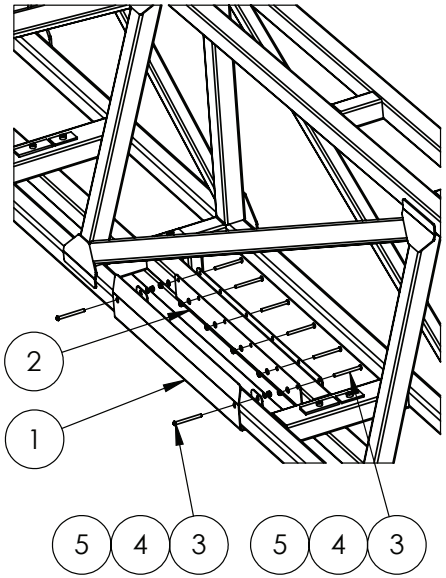

IF DESCRIPTION PREFIX IS ASSEMBLY DRAWING ONLY OR PRODUCTION DRAWING ONLY THE ITEM IS NOT FOR SALE			
ITEM	PART NUMBER	DESCRIPTION	QTY
1	GA4402215	BOOM PROTECTOR SS FITS OVER GUSSET MY17	1
2	F70799A	PROTECTOR, BOOM CORD, SUIT 50 X 50, 600mm, SS	1
3	GA0500067	BHCS M6 X 65 GR12.9 ZP	8
4	GA5004437	WASHER 6mm FLAT SS	8
5	GA5048115	NUT M6 NYLOC ZP	8
GA4909105 GOLDACRES		BOOM WING ASSEMBLY, 48M, RH, 2021	REV 03

Boom Support Bracket & Cord Protector Position, Small, 48mt

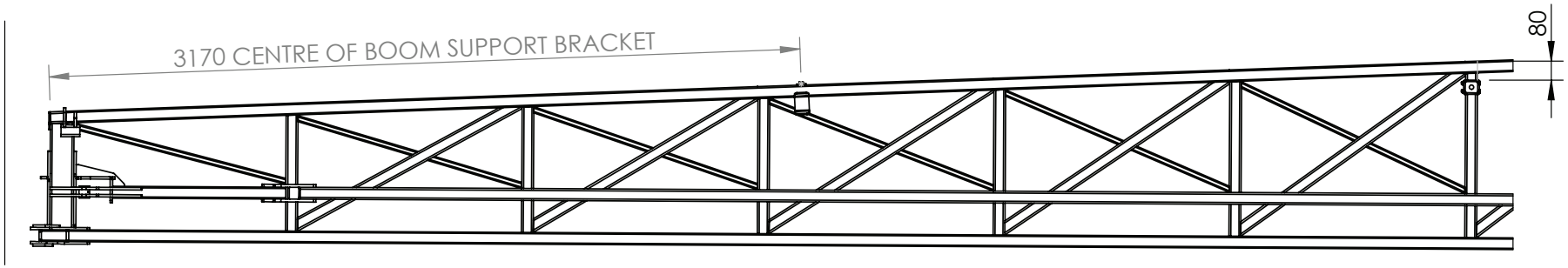

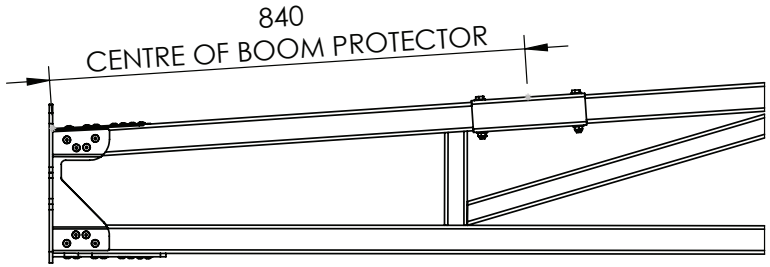

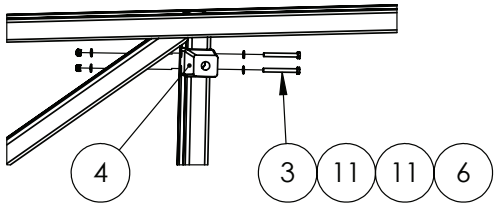

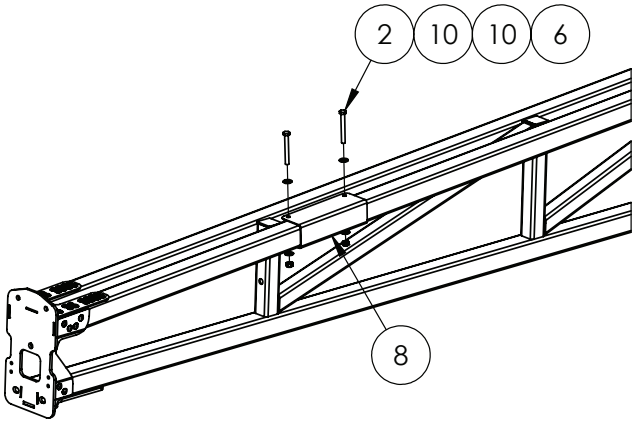

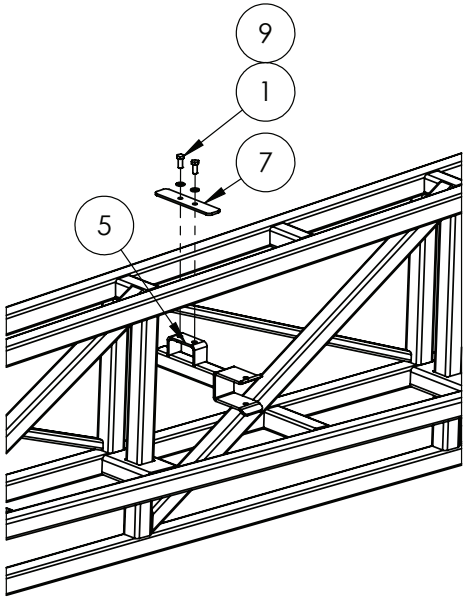

IF DESCRIPTION PREFIX IS ASSEMBLY DRAWING ONLY OR PRODUCTION DRAWING ONLY THE ITEM IS NOT FOR SALE			
ITEM	PART NUMBER	DESCRIPTION	QTY
1	GA5006161	BOLT M10 X 25 GR8.8 ZP	2
2	GA5004737	BOLT M8 X 70 SS A2-70	2
3	GA5052600	BOLT M8 X 75 SS A2-70	2
4	GA4908815	BOOM STOPPER 110mm LONG	1
5	GA4603651	BOOM SUPPORT BRACKET, 48M, OUTER WING, MY21	1
6	GA5052590	NUT M8 NYLOC SS	4
7	GA4409765	PLATE, CLAMP, BOOM SUPPORT BRACKET, 48M, OUTER WING, MY21	1
8	F70294A	PROTECTOR, BOOM CORD, SUIT 50 X 50, 200mm, SS	1
9	GA5000117	WASHER 10mm FLAT SS HD	2
10	GA5003643	WASHER 8mm FLAT SS HD	4
11	GA5003643	WASHER 8mm FLAT SS HD	4
GA4909105 GOLDACRES		BOOM WING ASSEMBLY, 48M, RH, 2021	REV 03

Rapid Fire Air Tank & XRT Sensor Mounting, 48mt

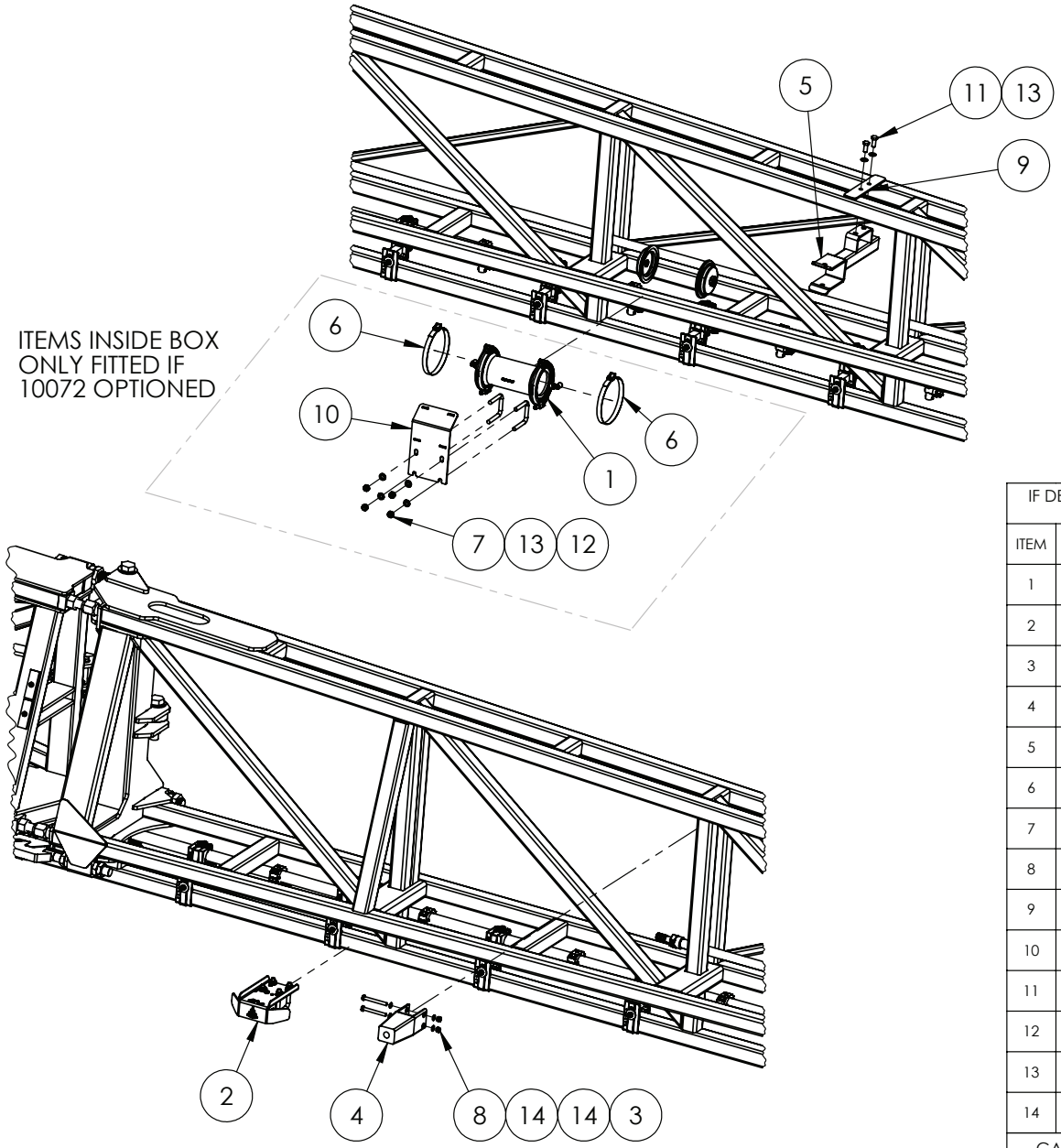

IF DESCRIPTION PREFIX IS ASSEMBLY DRAWING ONLY OR PRODUCTION DRAWING ONLY THE ITEM IS NOT FOR SALE			
ITEM	PART NUMBER	DESCRIPTION	QTY
1	GA4949330	AIR TANK, 0.9L, PLASTIC, 10 BAR, SUIT RAPID FIRE 3TS PRO	1
2	GA4952700	ASSEMBLY DRAWING ONLY, BRACKET, SENSOR, RAVEN XRT, SUITS TRITECH MY23	1
3	GA5052600	BOLT M8 X 75 SS A2-70	2
4	GA4908815	BOOM STOPPER 110mm LONG	1
5	GA4603651	BOOM SUPPORT BRACKET, 48M, OUTER WING, MY21	1
6	GA5053945	HOSE CLAMP 51mm-130mm - QUICK RELEASE	2
7	GA5051445	NUT M10 NYLOC SS	4
8	GA5052590	NUT M8 NYLOC SS	2
9	GA4409765	PLATE, CLAMP, BOOM SUPPORT BRACKET, 48M, OUTER WING, MY21	1
10	GA4414755	PLATE, MOUNT BOOM, 3TS PRO AIR TANK	1
11	GA5006161	SET SCREW M10 X 25 GR8.8 ZP	2
12	GA5053645	U BOLT SQUARE TOP M10 X 52 X 75	2
13	GA5000117	WASHER 10mm FLAT SS HD	6
14	GA5003643	WASHER 8mm FLAT SS HD	4
GA4951600-09 GOLDACRES		ASSEMBLY DRAWING ONLY, BOOM WING, 48M LH	REV 01

3rd Stage Fold, 48mt

NOTE:

IF G8 ITEM (6) FITTED

IF G6/ PRAIRIE PRO ITEM (7) FITTED

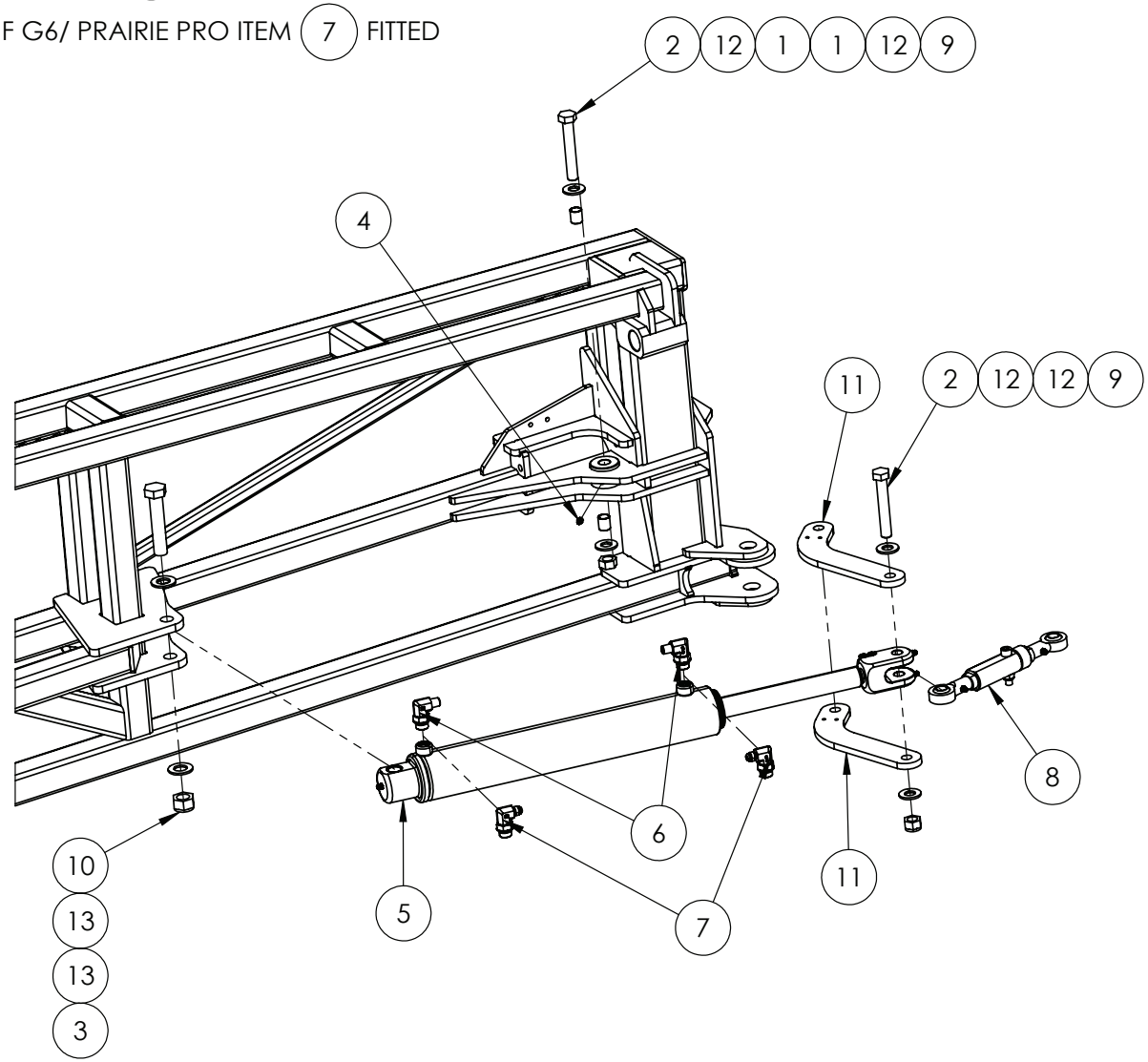

IF DESCRIPTION PREFIX IS ASSEMBLY DRAWING ONLY OR PRODUCTION DRAWING ONLY THE ITEM IS NOT FOR SALE			
ITEM	PART NUMBER	DESCRIPTION	QTY
1	GA1700013	BEARING, GLACIER BUSH, 16mm ID X 20mm LONG	2
2	GA5011269	BOLT M16 X 100 GR8.8 ZP	2
3	GA5048355	BOLT M20 X 100 GR8.8 ZP	1
4	GA5050450	GREASE NIPPLE, 6mm	1
5	GA3501082	HYDRAULIC CYLINDER, 2.5" X 1.25" X 395, 3RD STAGE FOLD, 48m	1
6	GA3500348	HYDRAULIC ADAPTOR, ELBOW, 90 DEGREE, 1/4" BSPT MALE X 3/4" UN MALE O-RING	2
7	GA3500700	HYDRAULIC ADAPTOR, ELBOW, 90 DEGREE, 9/16" JIC MALE X 3/4" UN MALE O-RING, S91-0912	2
8	GA4902265	LINK ASSEMBLY, THIRD STAGE FOLD, 48M BOOM	1
9	GA5012463	NUT M16 NYLOC SS	2
10	GA5048125	NUT M20 NYLOC COARSE ZP	1
11	GA4401080	PLATE, FOLD LINK, OUTER FOLD, 48m BOOM	2
12	GA5001043	WASHER 16mm FLAT SS HD	4
13	GA5001741	WASHER 20mm FLAT SS HD	2
GA4951600-07 GOLDACRES		ASSEMBLY DRAWING ONLY, BOOM WING, 48M LH	REV 00.B

Boom Link Assembly, 48mt

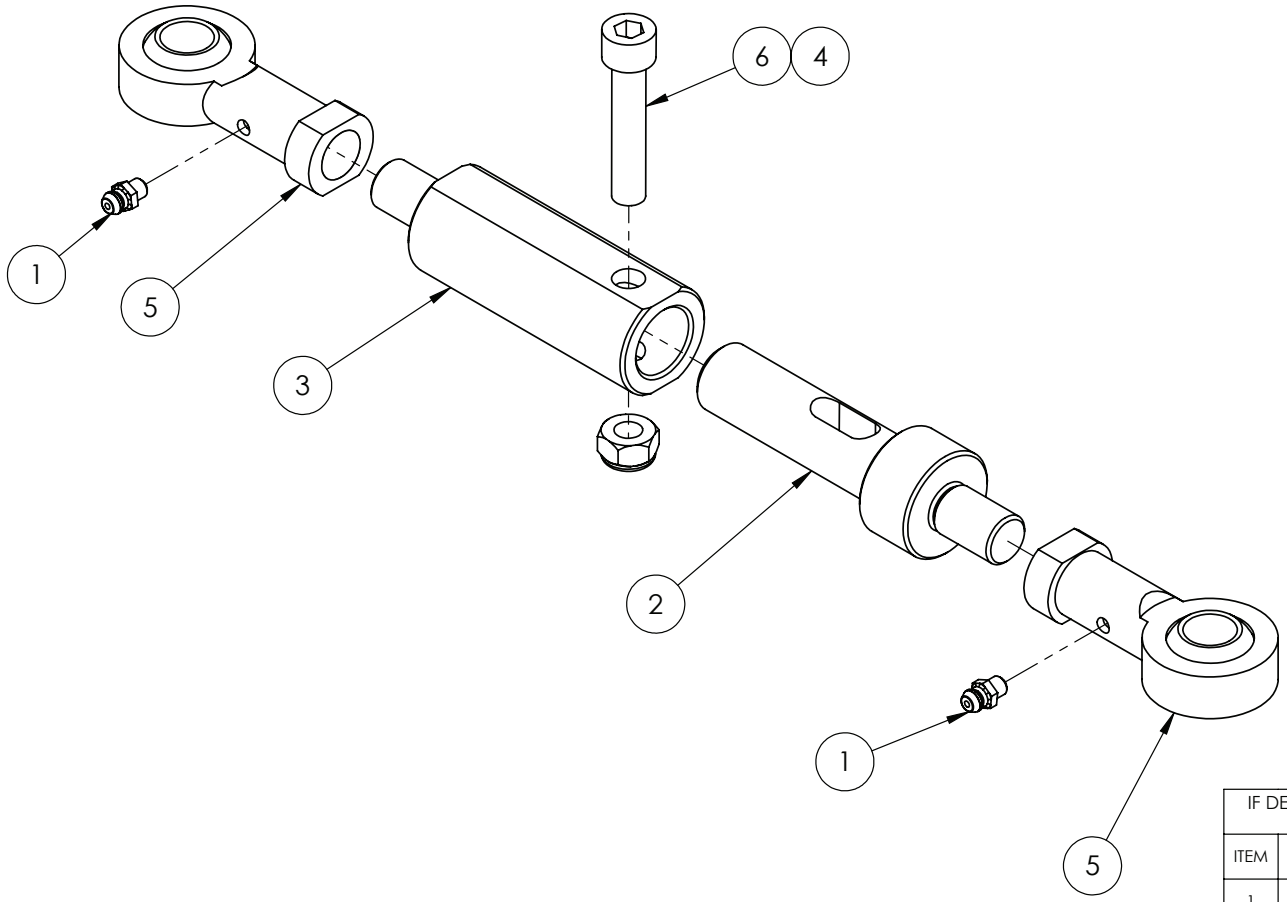

IF DESCRIPTION PREFIX IS ASSEMBLY DRAWING ONLY OR PRODUCTION DRAWING ONLY THE ITEM IS NOT FOR SALE			
ITEM	PART NUMBER	DESCRIPTION	QTY
1	GA5050450	GREASE NIPPLE, 6mm	2
2	GA4550905	LINK, INNER, THIRD FOLD, 48m BOOM	1
3	GA4550900	LINK, OUTER, THIRD FOLD, 48m BOOM	1
4	GA5000141	NUT M10 NYLOC ZP	1
5	GA5014469	ROD END FEMALE 16mm	2
6	GA5049990	SHCS M10 X 50 GR 12.9 ZP	1
GA4902265 GOLDACRES		LINK ASSEMBLY, THIRD STAGE FOLD, 48M BOOM	REV 00

Third Stage Fold, Rose Ends, 48m

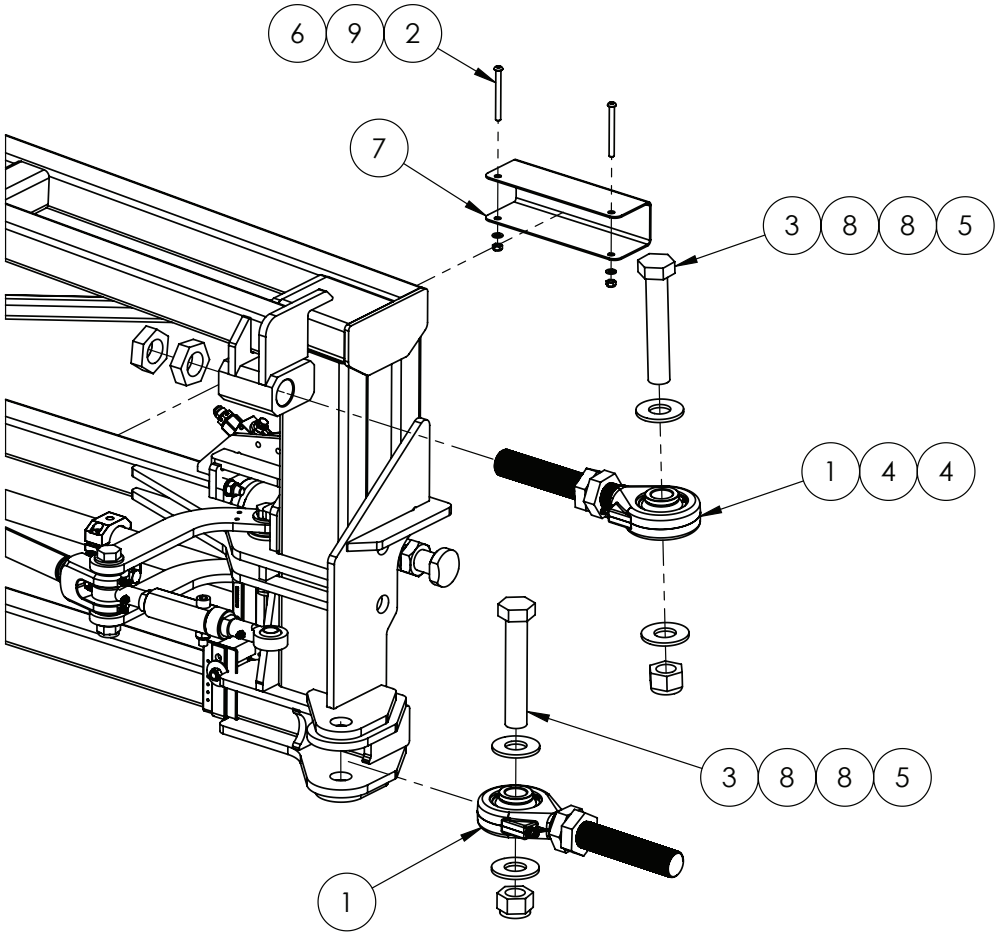

IF DESCRIPTION PREFIX IS ASSEMBLY DRAWING ONLY OR PRODUCTION DRAWING ONLY THE ITEM IS NOT FOR SALE			
ITEM	PART NUMBER	DESCRIPTION	QTY
1	GA4914375	ASSEMBLY DRAWING ONLY, ROSE END BEARING, BOOM 48M, FORGED	2
2	GA0500067	BHCS M6 X 65 GR12.9 ZP	2
3	GA5048175	BOLT 1 UNC X 5 1/2 GR8 ZP	2
4	GA5010963	NUT 1 1/4 UNF 12 TPI ZP LOCK NUT	2
5	GA5012439	NUT 1" NYLOC UNC ZP	2
6	GA5048115	NUT M6 NYLOC ZP	2
7	F70294A	PROTECTOR, BOOM CORD, SUIT 50 X 50, 200mm, SS	1
8	GA5017659	WASHER 1 FLAT ZP HD (5mm THICK)	4
9	GA5004437	WASHER 6mm FLAT SS	2
GA4951600-09 GOLDACRES		ASSEMBLY DRAWING ONLY, BOOM WING, 48M LH	REV 01

Third Stage Fold, Rose End Linkage, 48mt

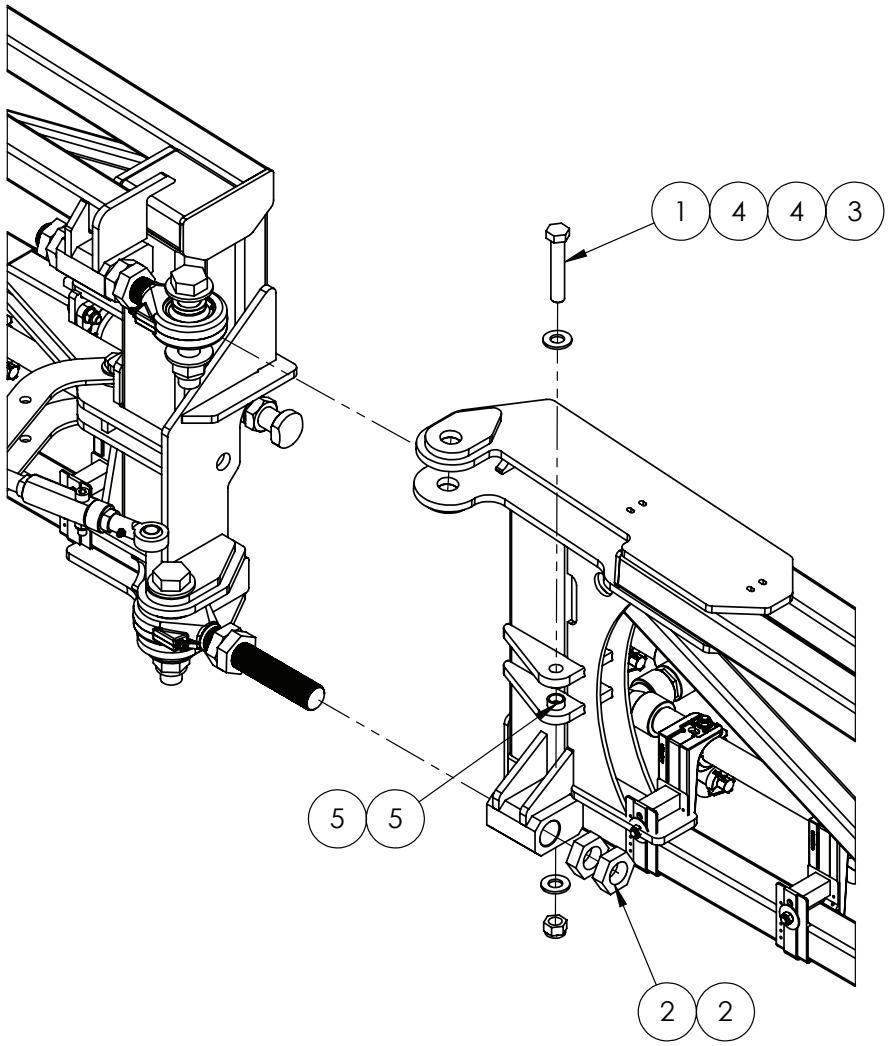

IF DESCRIPTION PREFIX IS ASSEMBLY DRAWING ONLY OR PRODUCTION DRAWING ONLY THE ITEM IS NOT FOR SALE			
ITEM	PART NUMBER	DESCRIPTION	QTY
1	GA5011297	BOLT M16 X 90 GR8.8 ZP	1
2	GA5010963	NUT 1 1/4 UNF 12 TPI ZP LOCK NUT	2
3	GA5012463	NUT M16 NYLOC SS	1
4	GA5001043	WASHER 16mm FLAT SS HD	2
5	GA4552070	CRUSH TUBE 16.2X20.5X9.5	2
GA4951600-12 GOLDACRES		ASSEMBLY DRAWING ONLY, BOOM WING, 48M LH	REV 00

Hydraulic Cylinder Mounting Assembly, Third Stage Fold, 48m

NOTE:

IF G8 ITEM (5) FITTED

IF G6/ PRAIRIE PRO ITEM (6) FITTED

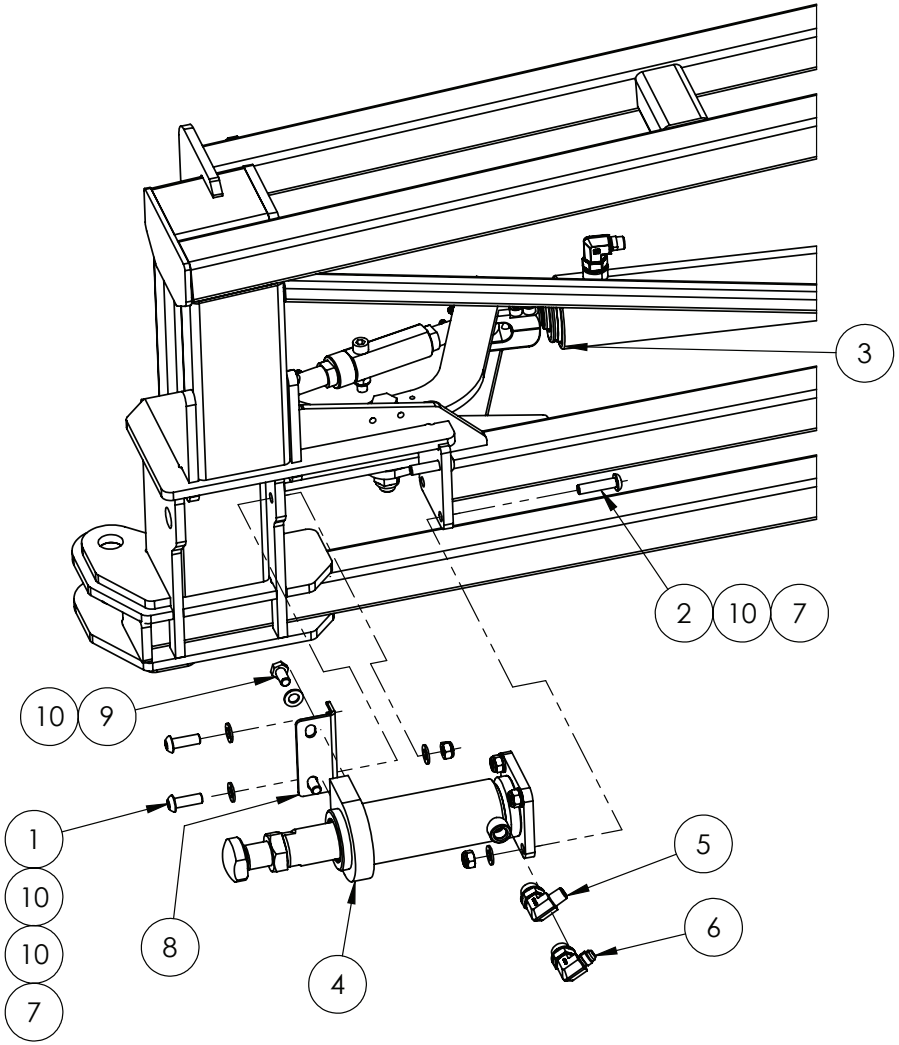

IF DESCRIPTION PREFIX IS ASSEMBLY DRAWING ONLY OR PRODUCTION DRAWING ONLY THE ITEM IS NOT FOR SALE			
ITEM	PART NUMBER	DESCRIPTION	QTY
1	GA5048120	BHCS M10 X 30 SS A2-70	2
2	GA5006059	BHCS M10 X 40 GR12.9 ZP	4
3	GA3501082	HYDRAULIC CYLINDER, 2.5" X 1.25" X 395, 3RD STAGE FOLD, 48m	1
4	GA3500479	HYDRAULIC CYLINDER, 2", BORE 1.5", ROD, 80mm STROKE, BREAKAWAY, 48M BOOM	1
5	GA3500348	HYDRAULIC ADAPTOR, ELBOW, 90 DEGREE, 1/4" BSPT MALE X 3/4" UN MALE O-RING	3
6	GA3500700	HYDRAULIC ADAPTOR, ELBOW, 90 DEGREE, 9/16" JIC MALE X 3/4" UN MALE O-RING, S91-0912	3
7	GA5051445	NUT M10 NYLOC SS	6
8	GA4401860	PLATE, MOUNT BRACKET, BREAKAWAY CYLINDER SUPPORT, 48m BOOM	1
9	GA5006113	SET SCREW M10 X 20 GR8.8 ZP	2
10	GA5000117	WASHER 10mm FLAT SS HD	10
GA4951600-07 GOLDACRES		ASSEMBLY DRAWING ONLY, BOOM WING, 48M LH	REV 00.B

Chain Assembly, Breakaway, 48m

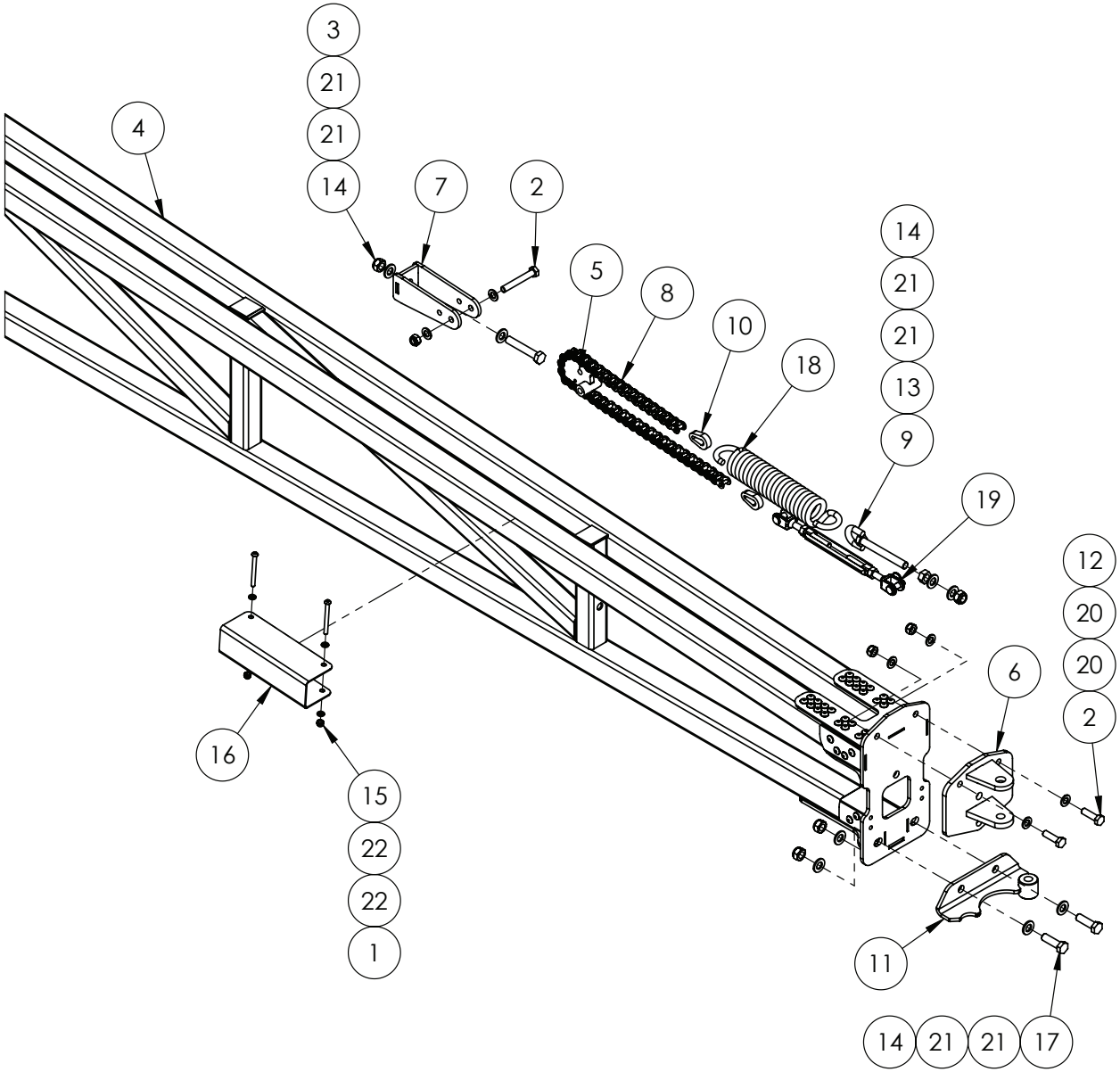

IF DESCRIPTION PREFIX IS ASSEMBLY DRAWING ONLY OR PRODUCTION DRAWING ONLY THE ITEM IS NOT FOR SALE			
ITEM	PART NUMBER	DESCRIPTION	QTY
1	GA0500067	BHCS M6 X 65 GR12.9 ZP	2
2	GA5011163	BOLT M10 X 70 GR8.8 ZP	3
3	GA5000347	BOLT M12 X 70 GR8.8 ZP	1
4	GA4603625	BOOM WING, OUTER, 48M, LH, ALUMINIUM, ANGLE FOLD	1
5	GA4659800	BREAK AWAY CENTRE PIVOT FAB ASSEM	1
6	GA4656131	BREAKAWAY MK3.1 ROSE END CLEVIS	1
7	GA4659805	BREAKAWAY MOUNT	1
8	GA5068985	CHAIN, 5/8", 41 PITCH BREAKAWAY HINGE	1
9	GA5075150	EYE BOLT 12mm X 100mm SHORT	1
10	GA4505695	LINK PLATE CHAIN END	2
11	GA4659336	LOWER PIVOT BRACKET MK3.3	1
12	GA5000141	NUT M10 NYLOC ZP	3
13	GA5000559	NUT M12 HEX ZP	1
14	GA5012461	NUT M12 NYLOC ZP	4
15	GA5048115	NUT M6 NYLOC ZP	2
16	F70294A	PROTECTOR, BOOM CORD, SUIT 50 X 50, 200mm, SS	1
17	GA5000319	SET SCREW M12 X 40 GR8.8 ZP	2
18	GA5025170	SPRING, TENSION, 50 OD X 260 LONG X 9mm, BREAKAWAY, MY20	1
19	GA5070505	TURNBUCKLE, S/S 10.mm JAW/JAW	1
20	GA5000117	WASHER 10mm FLAT SS HD	6
21	GA5000577	WASHER 12mm FLAT SS HD	8
22	GA5004437	WASHER M6 FLAT SS HD	4
GA4951600-01 GOLDACRES		ASSEMBLY DRAWING ONLY, BOOM WING, 48M LH	REV 01

Pivot Assembly, Breakaway, 48m

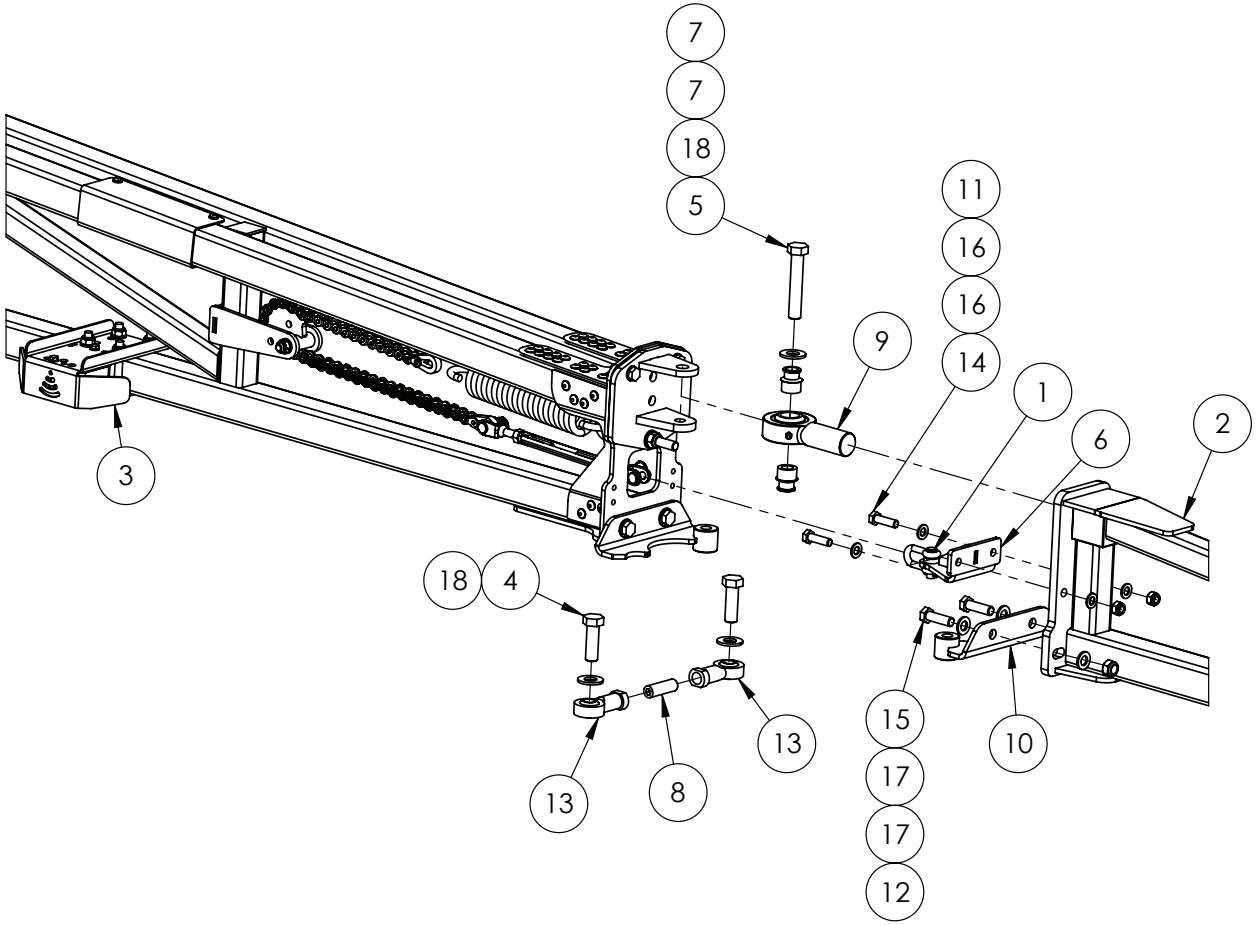

IF DESCRIPTION PREFIX IS ASSEMBLY DRAWING ONLY OR PRODUCTION DRAWING ONLY THE ITEM IS NOT FOR SALE			
ITEM	PART NUMBER	DESCRIPTION	QTY
1	GA5071060	10mm UTILITY CLEVIS 24CST002	1
2	GA4656123	ALUM BREAKAWAY 2M, SUIT 3D BREAKAWAY 2.0	1
3	GA4952700	ASSEMBLY DRAWING ONLY, BRACKET, SENSOR, RAVEN XRT, SUITS TRITECH MY23	1
4	GA5000931	BOLT M16 X 50 GR8.8 ZP	2
5	GA5011297	BOLT M16 X 90 GR8.8 ZP	1
6	GA4659810	BREAKAWAY ROSE END CLEVIS 3D 2.0	1
7	GA4552225	BREAKAWAY ROSE END SPACER BUSH 3D 2.0	2
8	GA5071105	GRUB SCREW M16 X 50	1
9	GA5070530	LARGE ROSE END 1" X 1 1/4" UNF BB074-VM16	1
10	GA4659336	LOWER PIVOT BRACKET MK3.3	1
11	GA5000141	NUT M10 NYLOC ZP	2
12	GA5012461	NUT M12 NYLOC ZP	2
13	GA5014469	ROD END FEMALE 16mm	2
14	GA5006111	SET SCREW M10 X 35 GR8.8 ZP	2
15	GA5000319	SET SCREW M12 X 40 GR8.8 ZP	2
16	GA5000117	WASHER 10mm FLAT SS HD	4
17	GA5000577	WASHER 12mm FLAT SS HD	4
18	GA5001043	WASHER 16mm FLAT SS HD	3
GA4951600-02 GOLDACRES		ASSEMBLY DRAWING ONLY, BOOM WING, 48M LH	REV 00.B

Nozzle Body & Blue LED Working Light Mounting, 48mt

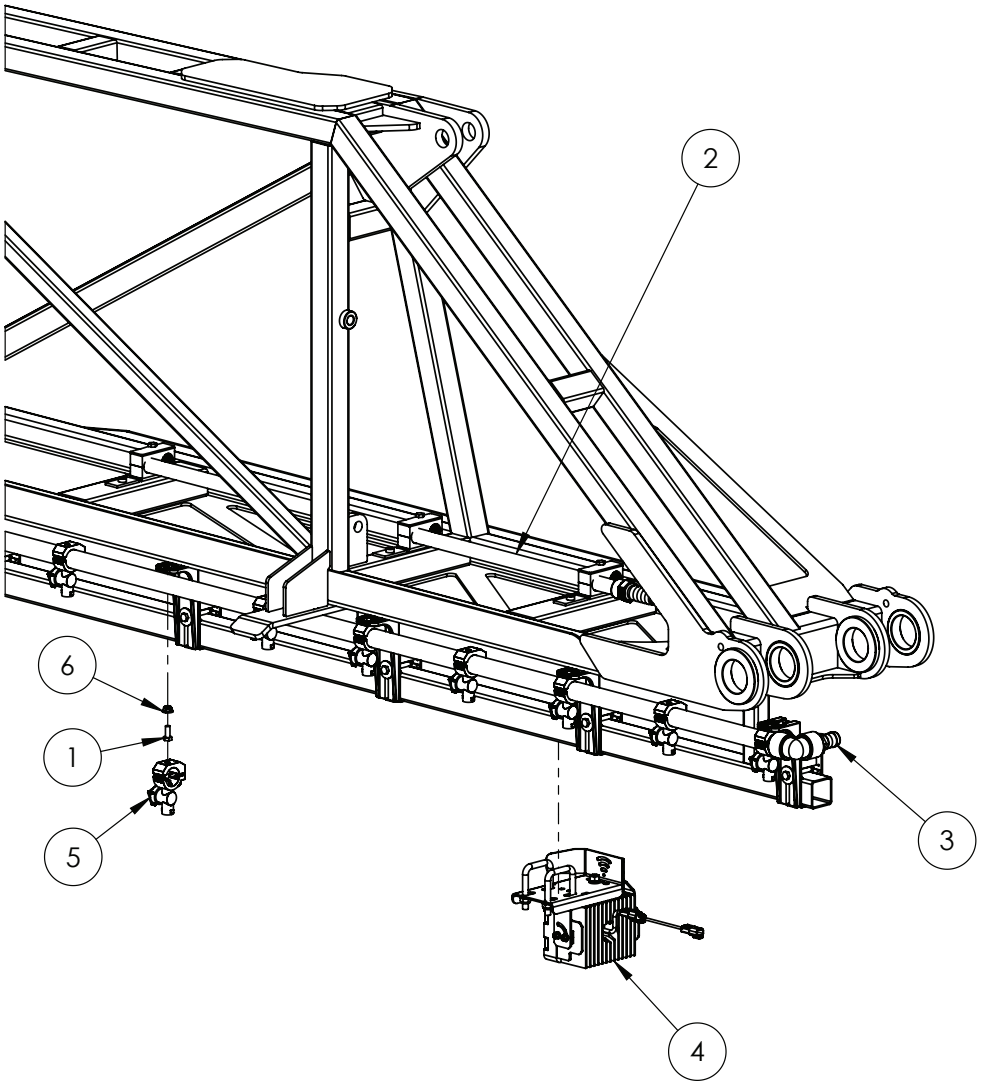

IF DESCRIPTION PREFIX IS ASSEMBLY DRAWING ONLY OR PRODUCTION DRAWING ONLY THE ITEM IS NOT FOR SALE			
ITEM	PART NUMBER	DESCRIPTION	QTY
1	GA5004085	BOLT M8 X 20 GR8.8 ZP	18
2	GA4951805	BOOM POLY ASSEMBLY, 48M, INNER SECTION, BOOM RECIRCULATION	1
3	GA4951720	BOOM POLY ASSEMBLY. BARE, 48M, LH INNER	1
4	GA4912810	BOOM LIGHT ASSEMBLY, BLUE, SUIT 50mm BOOM MOUNT	1
5	GA5077962	NOZZLE BODY, SINGLE, 1", TEEJET, QJ17560A-1-NYB	35
6	GA5070710	NUT WITH FLANGE, PLASTIC, M8 X 1.25	18
GA4951600-05 GOLDACRES		ASSEMBLY DRAWING ONLY, BOOM WING, 48M LH	REV 01

Working Light Assembly, Blue LED

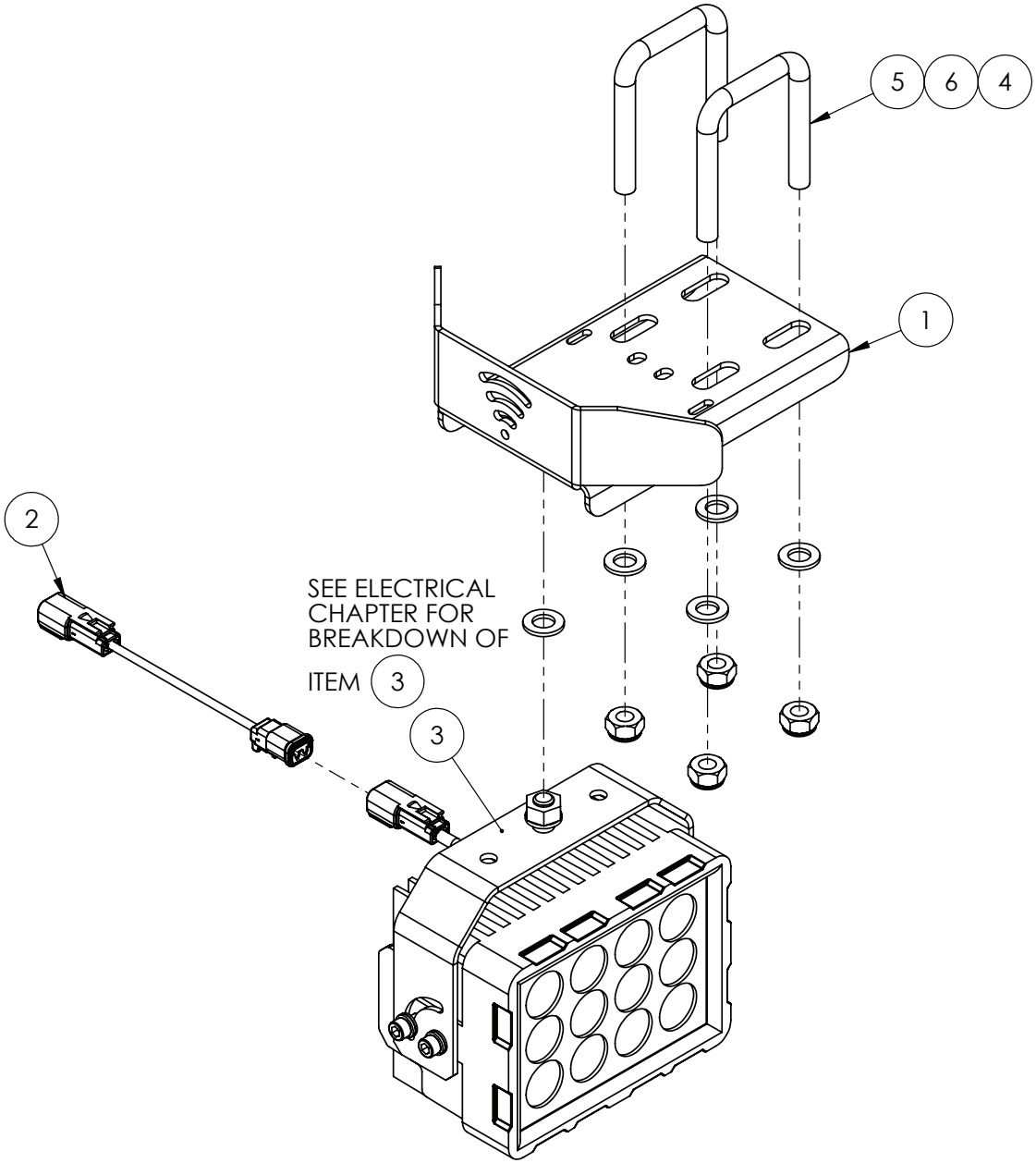

IF DESCRIPTION PREFIX IS ASSEMBLY DRAWING ONLY OR PRODUCTION DRAWING ONLY THE ITEM IS NOT FOR SALE			
ITEM	PART NUMBER	DESCRIPTION	QTY
1	GA4411280	BRACKET, RAVEN XRT RADAR SENSOR / LIGHT MOUNT, BOOM, WITH FRONT SHIELD	1
2	GA3000574	ELECTRICAL HARNESS, RCM NOZZLE EXTENSION, 1000mm	1
3	GA3000333	LIGHT, LED, BLUE, SPOT BEAM, 60 WATT, GLASS FRONT	1
4	GA5000141	NUT M10 NYLOC ZP	4
5	GA5053645	U BOLT SQUARE TOP M10 X 52 X 75	2
6	GA5000117	WASHER 10mm FLAT SS HD	5
GA4912810 GOLDACRES		BOOM LIGHT ASSEMBLY, BLUE, SUIT 50mm BOOM MOUNT	REV 00

Nozzle Bracket & Boom Poly Clamps, 48mt

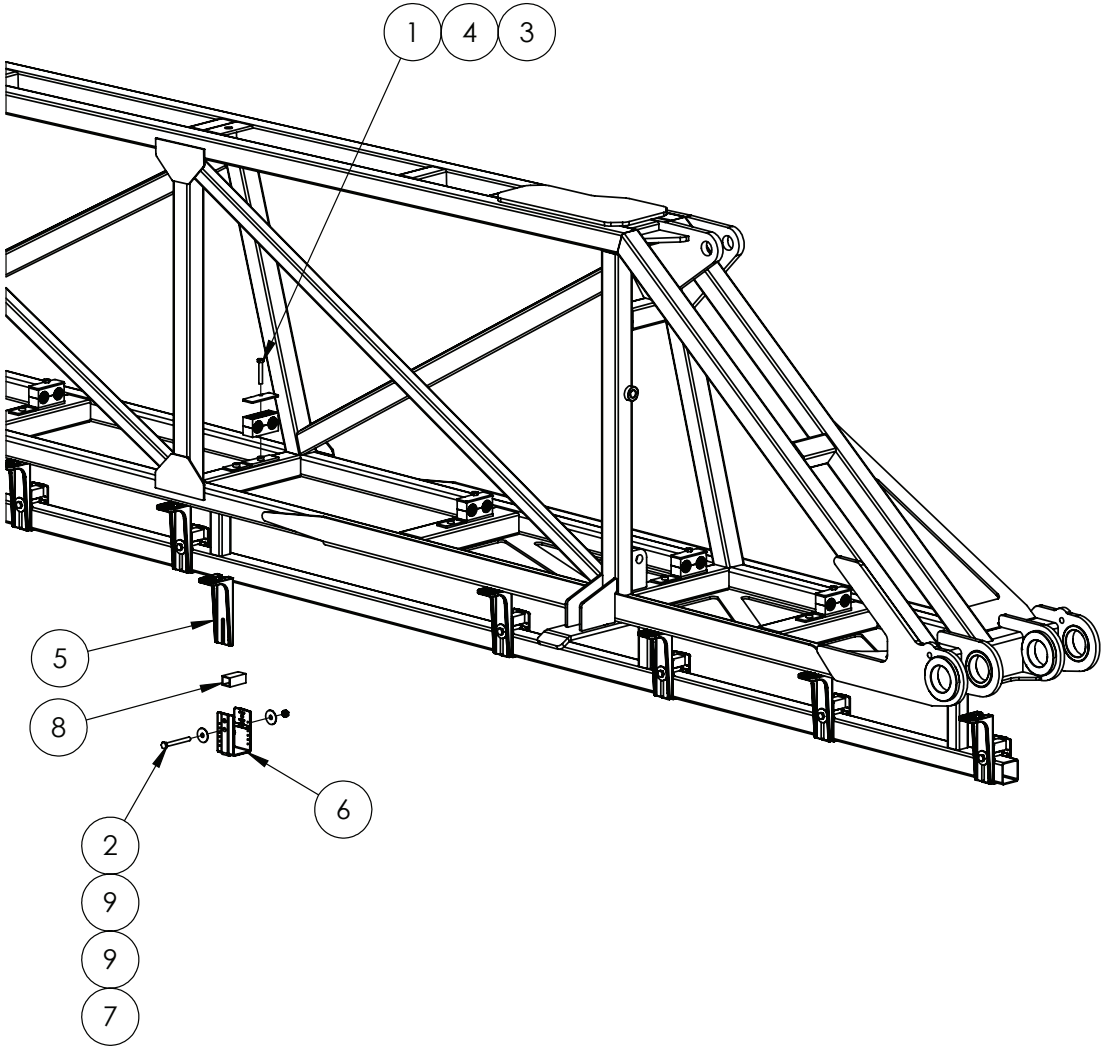

IF DESCRIPTION PREFIX IS ASSEMBLY DRAWING ONLY OR PRODUCTION DRAWING ONLY THE ITEM IS NOT FOR SALE			
ITEM	PART NUMBER	DESCRIPTION	QTY
1	GA5004727	BOLT M8 X 50 GR8.8 ZP	12
2	GA5052600	BOLT M8 X 75 SS A2-70	18
3	GA5078038	MOUNTING CLAMP, DOUBLE TYPE, JAW, PAIR, GROUP 4, 28mm, RCD-28J	12
4	GA5078049	MOUNTING CLAMP, DOUBLE TYPE, PLATE, TOP, GROUP 4, RCD-4PT	12
5	GA5018258	NOZZLE BRACKET, PLASTIC, L SHAPE, LONG	18
6	GA5018259	NOZZLE BRACKET, PLASTIC, U SHAPE	18
7	GA5052590	NUT M8 NYLOC SS	19
8	GA5066965	SPACER SUIT NOZZLE BRACKETS	18
9	GA5003645	WASHER FLAT SS 5-16 X 1 1-4	38
GA4951600-05 GOLDACRES		ASSEMBLY DRAWING ONLY, BOOM WING, 48M LH	REV 01.A

Nozzle Bracket Extension Assembly, 48m

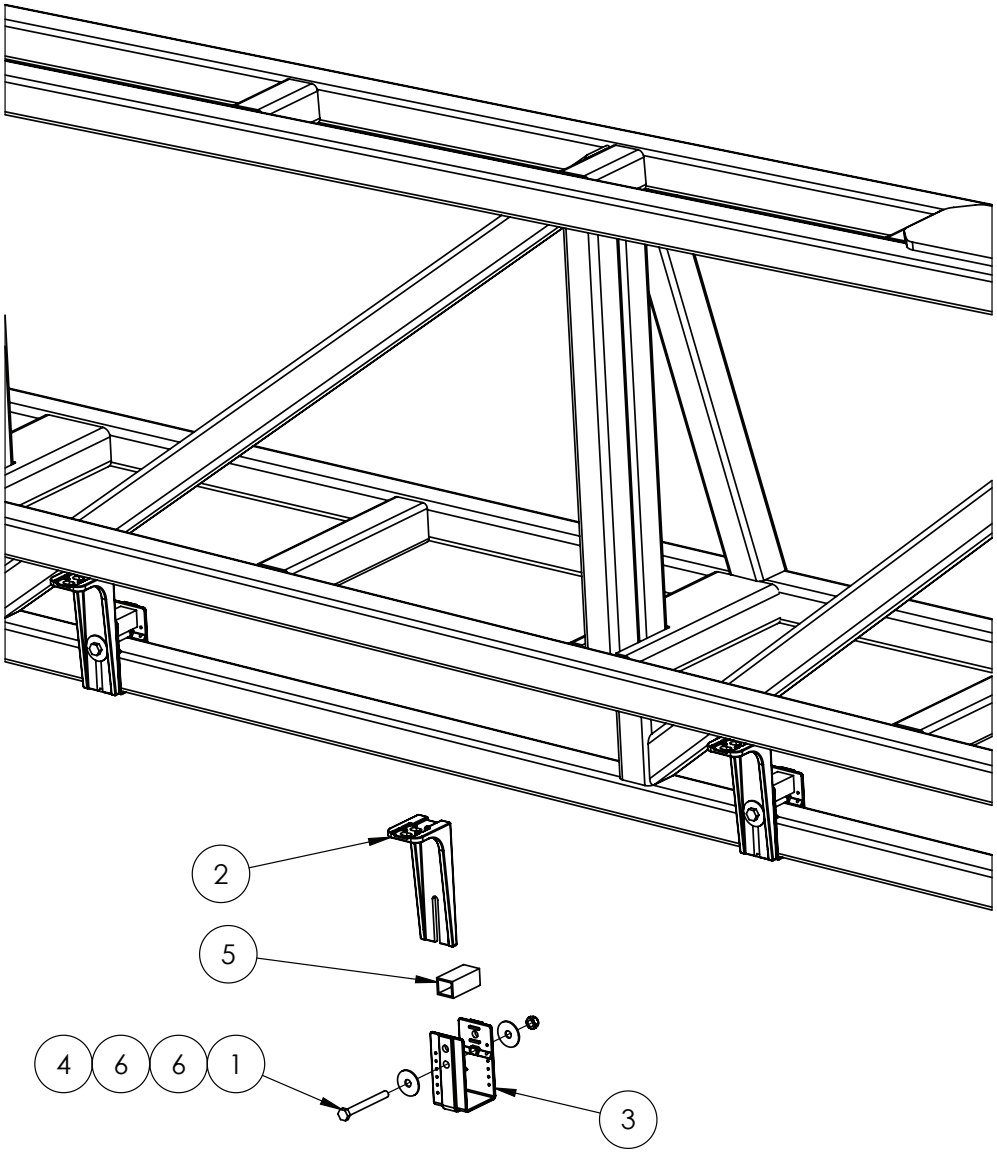

IF DESCRIPTION PREFIX IS ASSEMBLY DRAWING ONLY OR PRODUCTION DRAWING ONLY THE ITEM IS NOT FOR SALE			
ITEM	PART NUMBER	DESCRIPTION	QTY
1	GA5052600	BOLT M8 X 75 SS A2-70	16
2	GA5018258	NOZZLE BRACKET, PLASTIC, L SHAPE, LONG	16
3	GA5018259	NOZZLE BRACKET, PLASTIC, U SHAPE	16
4	GA5052590	NUT M8 NYLOC SS	16
5	GA5066965	SPACER SUIT NOZZLE BRACKETS	16
6	GA5003645	WASHER FLAT SS 5-16 X 1 1-4	32
GA4951600-08 GOLDACRES		ASSEMBLY DRAWING ONLY, BOOM WING, 48M LH	REV 01

Nozzle Body Bracket Mounting, Breakaway, 48mt

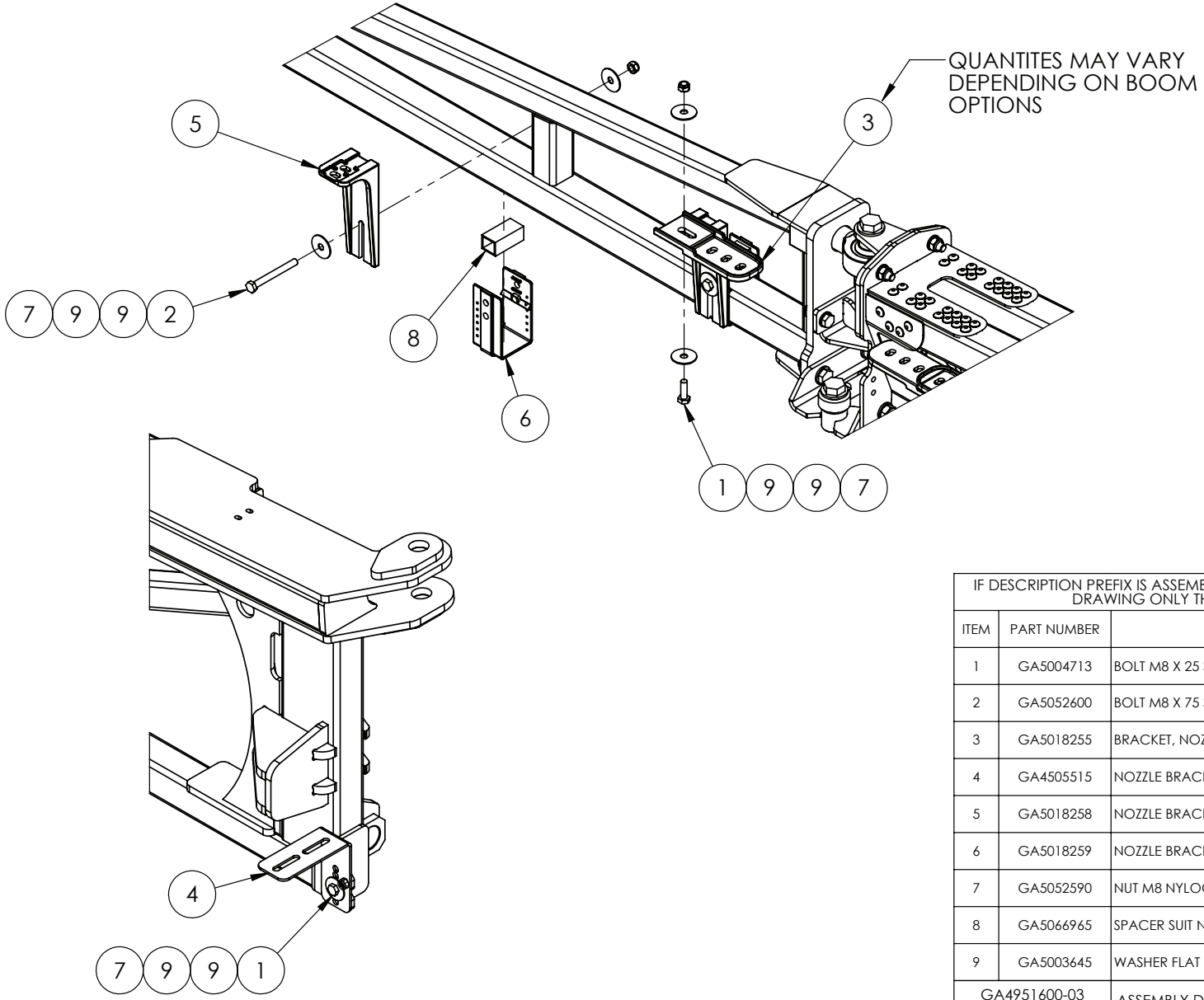

IF DESCRIPTION PREFIX IS ASSEMBLY DRAWING ONLY OR PRODUCTION DRAWING ONLY THE ITEM IS NOT FOR SALE			
ITEM	PART NUMBER	DESCRIPTION	QTY
1	GA5004713	BOLT M8 X 25 SS A2-70	5
2	GA5052600	BOLT M8 X 75 SS A2-70	12
3	GA5018255	BRACKET, NOZZLE EXTENSION, PLASTIC	4
4	GA4505515	NOZZLE BRACKET L LONG SS	1
5	GA5018258	NOZZLE BRACKET, PLASTIC, L SHAPE, LONG	12
6	GA5018259	NOZZLE BRACKET, PLASTIC, U SHAPE	12
7	GA5052590	NUT M8 NYLOC SS	17
8	GA5066965	SPACER SUIT NOZZLE BRACKETS	10
9	GA5003645	WASHER FLAT SS 5-16 X 1 1-4	33
GA4951600-03 GOLDACRES		ASSEMBLY DRAWING ONLY, BOOM WING, 48M LH	REV 01

Boom End Protector, 48mt

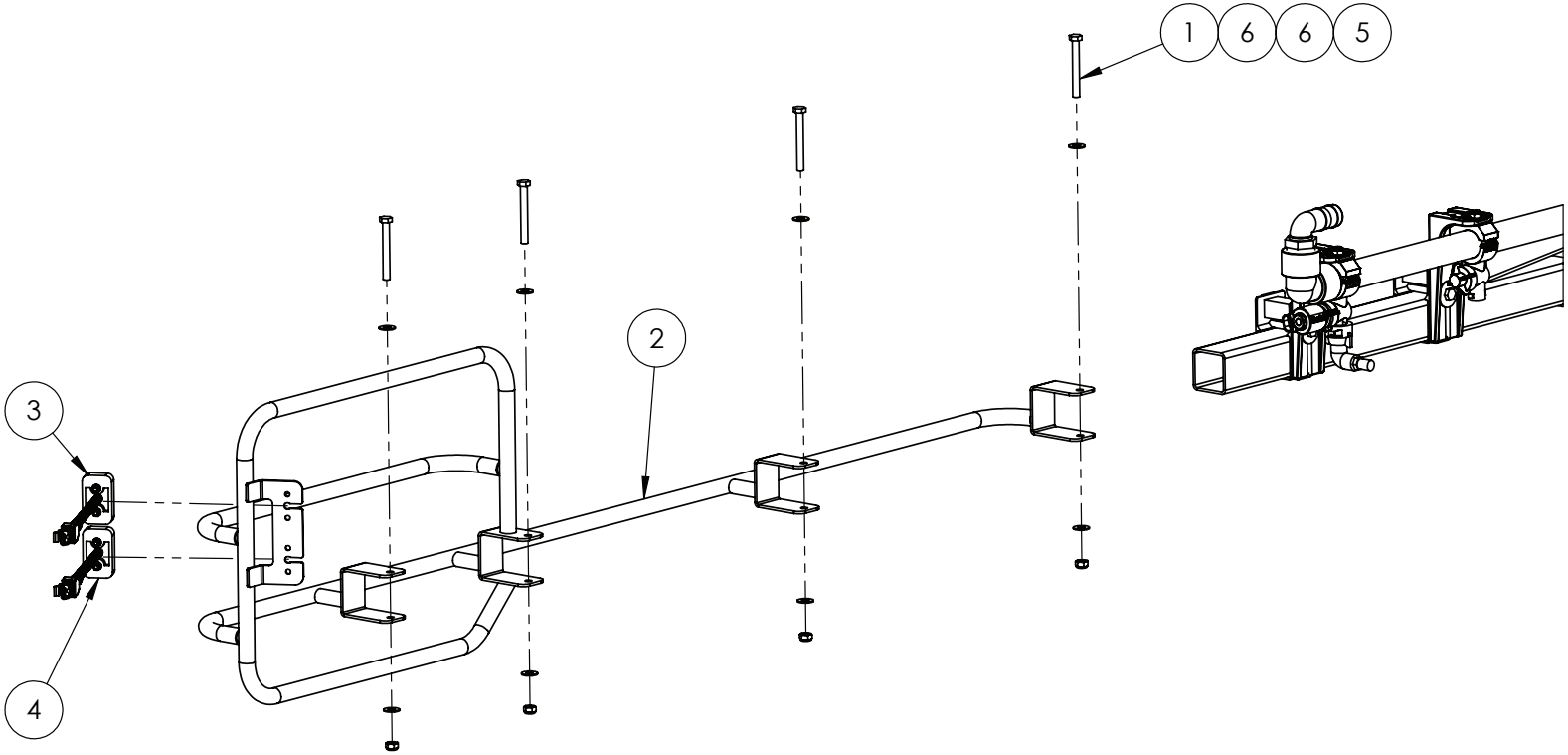

IF DESCRIPTION PREFIX IS ASSEMBLY DRAWING ONLY OR PRODUCTION DRAWING ONLY THE ITEM IS NOT FOR SALE			
ITEM	PART NUMBER	DESCRIPTION	QTY
1	GA5004737	BOLT M8 X 70 SS A2-70	4
2	GA4601260	BOOM END PROTECTOR, LH, SLIM	1
3	GA5060057	CLEARANCE LIGHT WITH CONNECTOR, ORANGE LED, SUIT FENCE LINE JET	1
4	GA5060056	CLEARANCE LIGHT WITH CONNECTOR, RED LED, SUIT FENCE LINE JET	1
5	GA5052590	NUT M8 NYLOC SS	4
6	GA5003643	WASHER 8mm FLAT SS HD	8
GA4951600-13 GOLDACRES		ASSEMBLY DRAWING ONLY, BOOM WING, 48M LH	REV 00

13 - Wheels, Axles & Mudguards

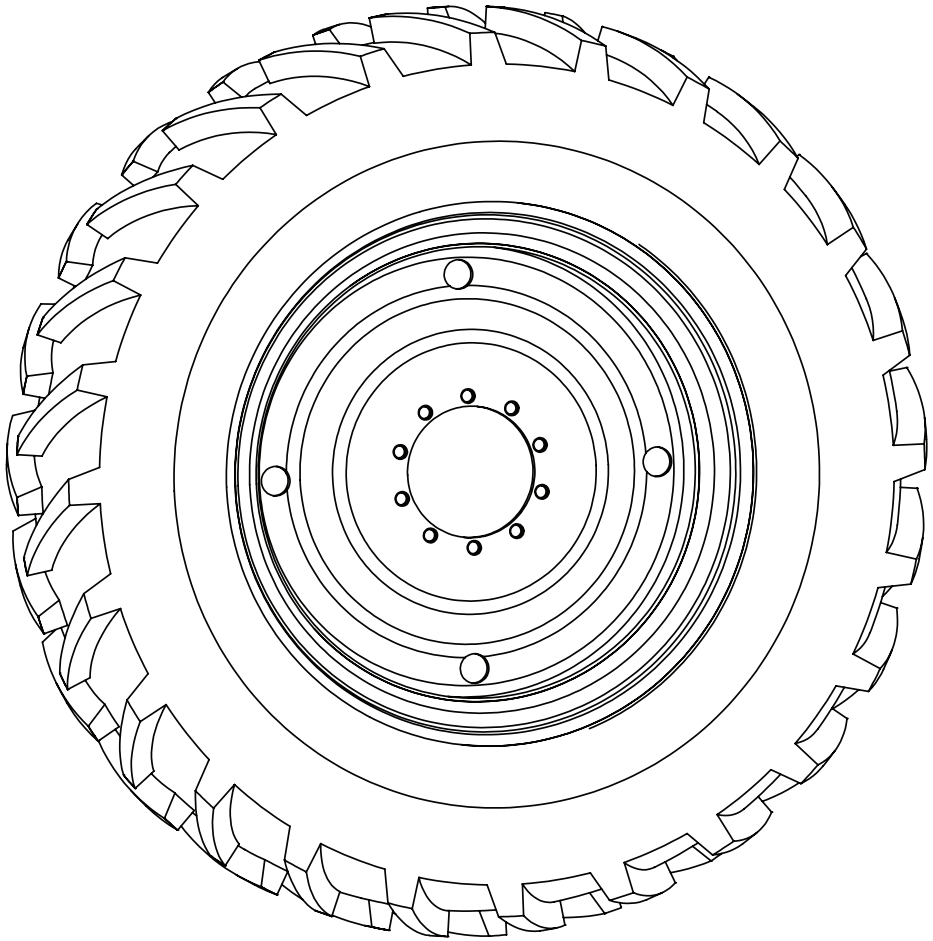

RIM & TYRE OPTIONS TO SUIT 5000L

IF DESCRIPTION PREFIX IS ASSEMBLY DRAWING ONLY OR PRODUCTION DRAWING ONLY THE ITEM IS NOT FOR SALE			
ITEM	PART NUMBER	DESCRIPTION	QTY
40000	GA5018820	WHEEL DW15 X 38 10 STUD 0 OFFSET	2
	GA5001108	TYRE, 520/85R46, AGRIMAX	2
40010	GA5020340	WHEEL DW18 X 42 10 ON 335 0 OFFSET	2
	GA5020831	TYRE, RADIAL 520/85R42 (20.8 X 42), HR45 X-LOAD 169A8	2
40027	GA1500004	WHEEL, DD16 X 46, 0mm OFFSET, 10 STUD 335 PCD, G4, G6, G8	2
	GA1500021	TYRE, 480/80 R46, HR45, 166A8/159D HIGH LOAD	2
GA7800096 GOLDACRES		PRAIRIE PRO, RIM & TYRE OPTIONS, 5000L	REV 00

Rims & Tyre Options, 6500L

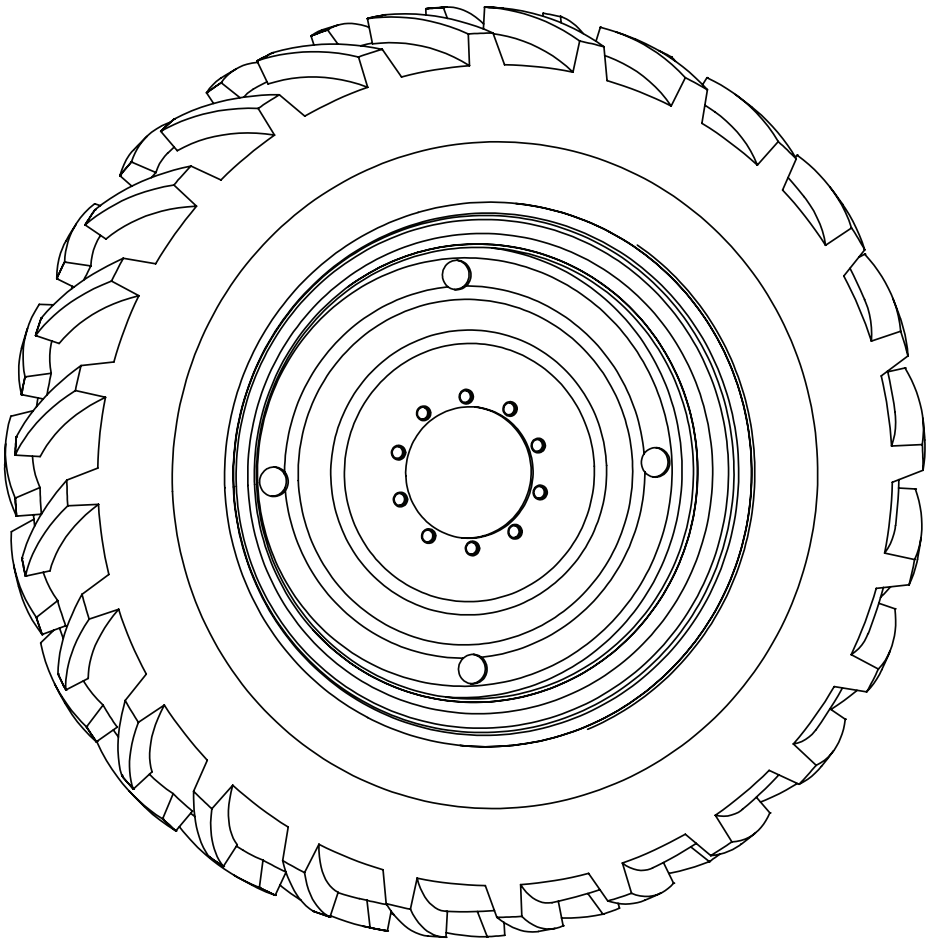

RIM & TYRE OPTIONS TO SUIT 6500L

IF DESCRIPTION PREFIX IS ASSEMBLY DRAWING ONLY OR PRODUCTION DRAWING ONLY THE ITEM IS NOT FOR SALE			
ITEM	PART NUMBER	DESCRIPTION	QTY
40000	GA5018820	WHEEL DW15 X 38 10 STUD 0 OFFSET	2
	GA5001108	TYRE, 520/85R46, AGRIMAXTYRE 18.4 X 38 (16 PLY)	2
40010	GA5020340	WHEEL DW18 X 42 10 ON 335 0 OFFSET	2
	GA5020831	TYRE, RADIAL 520/85R42 (20.8 X 42), HR45 X-LOAD 169A8	2
40027	GA1500004	WHEEL, DD16 X 46, 0mm OFFSET, 10 STUD 335 PCD, G4, G6, G8	2
	GA1500021	TYRE, 480/80 R46, HR45, 166A8/159D HIGH LOAD	2
45110	GA1500050	WHEEL, AG50-15, 10 STUD 335 PCD, 0mm AND -18mm OFFSET, UNIVERSAL, 290mm CENTRE, NG23	2
	GA1500049	TYRE, 480/80R50 HR45 X-LOAD 177A8 TL, HARVEST	2
GA7800096 GOLDACRES	PRAIRIE PRO, RIM & TYRE PTIONS, 6500L		REV 00

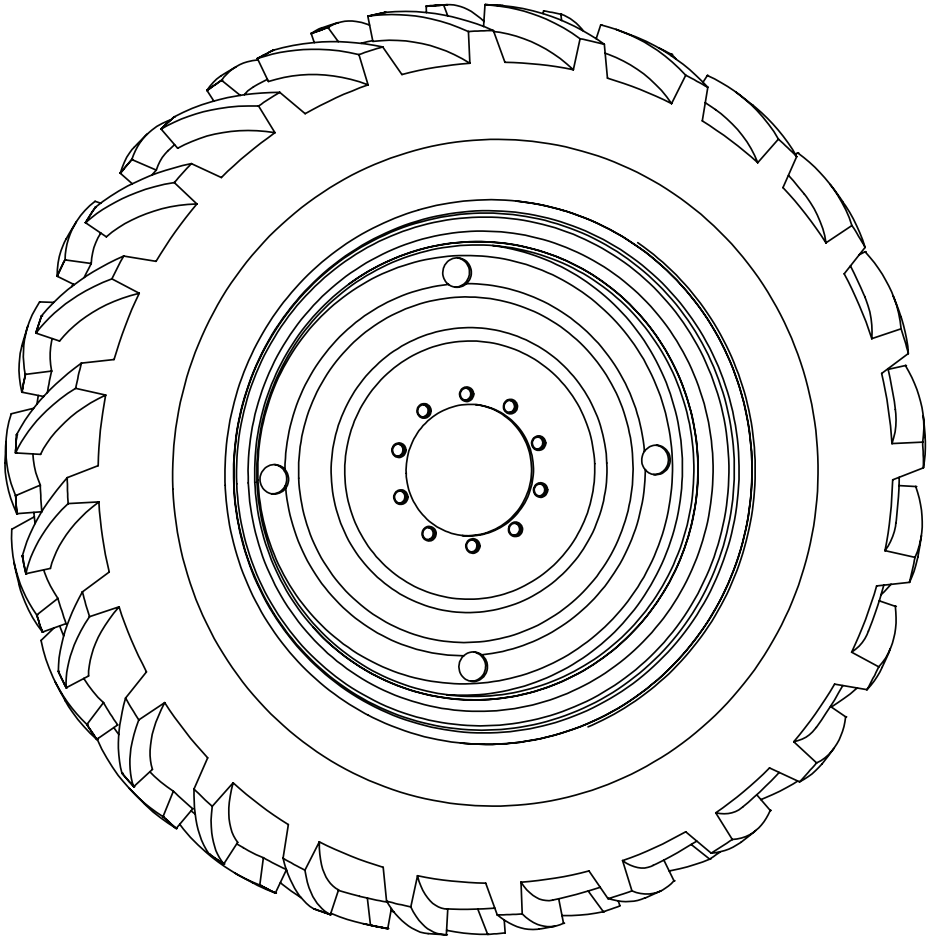

RIM & TYRE OPTIONS TO SUIT 8500L

IF DESCRIPTION PREFIX IS ASSEMBLY DRAWING ONLY OR PRODUCTION DRAWING ONLY THE ITEM IS NOT FOR SALE			
ITEM	PART NUMBER	DESCRIPTION	QTY
40010	GA5020340	WHEEL DW18 X 42 10 ON 335 0 OFF	2
	GA5020831	TYRE, 520/85R46, AGRIMAX	2
45115	GA1500004	WHEEL, DD16 X 46, 0mm OFFSET, 10 STUD 335 PCD, G4, G6, G8	2
	GA1500024	TYRE, 520/85R46, HIGH LOAD 173A8/169D, HARVEST	2
45110	GA1500050	WHEEL, AG50-15, 10 STUD 335 PCD, 0mm AND -18mm OFFSET, UNIVERSAL, 290mm CENTRE, NG23	2
	GA1500049	TYRE, 480/80R50 HR45 X-LOAD 177A8 TL, HARVEST	2
45120	GA1500020	WHEEL, 42-23TW, 10/335, 0mm OFFSET SUIT 710/70R42	2
	GA1500019	TYRE, 710/70R42, 179A8/173B, HARVEST	2
GA7800096 GOLDACRES		PRAIRIE PRO, RIM & TYRE OPTIONS, 8500L	REV 00

Rim & Tyre Options, 10,000L

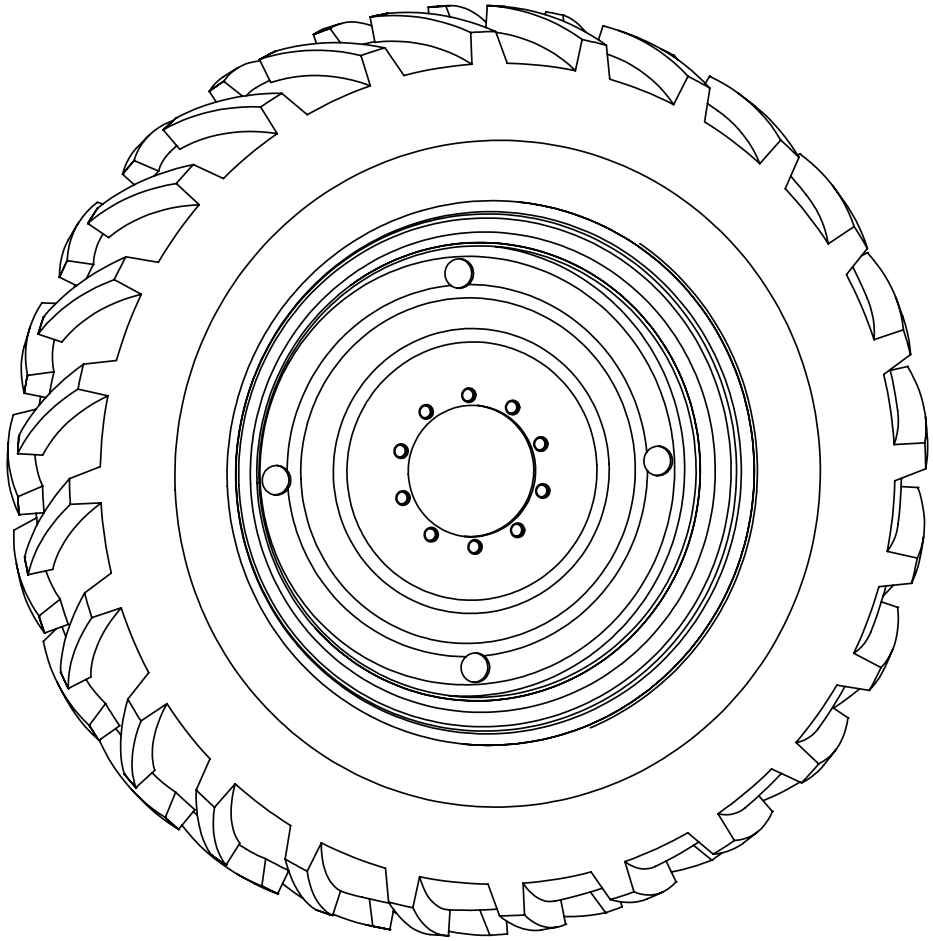

RIM & TYRE OPTIONS TO SUIT 10,000L

IF DESCRIPTION PREFIX IS ASSEMBLY DRAWING ONLY OR PRODUCTION DRAWING ONLY THE ITEM IS NOT FOR SALE			
ITEM	PART NUMBER	DESCRIPTION	QTY
45110	DD13X46 TC NO-OFFSET	DD13 X 46 TC NO OFFSET	2
	GA5020831	TYRE, 520/85R46, AGRIMAX	2
45120	GA1500020	WHEEL, 42-23TW, 10/335, 0mm OFFSET SUIT 710/70R42	2
	GA1500019	TYRE, 710/70R42, 179A8/173B, HARVEST	2
GA7800096 GOLDACRES		PRAIRIE PRO, RIM & TYRE OPTIONS, 10,000L	REV 00

Suspension Assembly, 2mt, Air Bag, Un-Braked Axle, 5000L - 6500L

ITEM	PART NUMBER	DESCRIPTION	QTY
A	GA4603155	AXLE, 2m, UNBRAKED, SUIT 5000L & 6500L, PRAIRIE PRO, 2021	-
A	GA4603160	AXLE, 3m, UNBRAKED, SUIT 5000L & 6500L, PRAIRIE PRO, 2021	-
A	GA4603275	AXLE, CUSTOM WIDTH, UNBRAKED, SUIT 5000L & 6500L, PRAIRIE PRO, SERIES 2, REFER TO BUILD SHEET	-
B	GA5018119	STUB AXLE, 90 SERIES, 10 STUD 335mm PCD, 350mm FACE TO STUB, ADR	2

AXLE WIDTH 2M

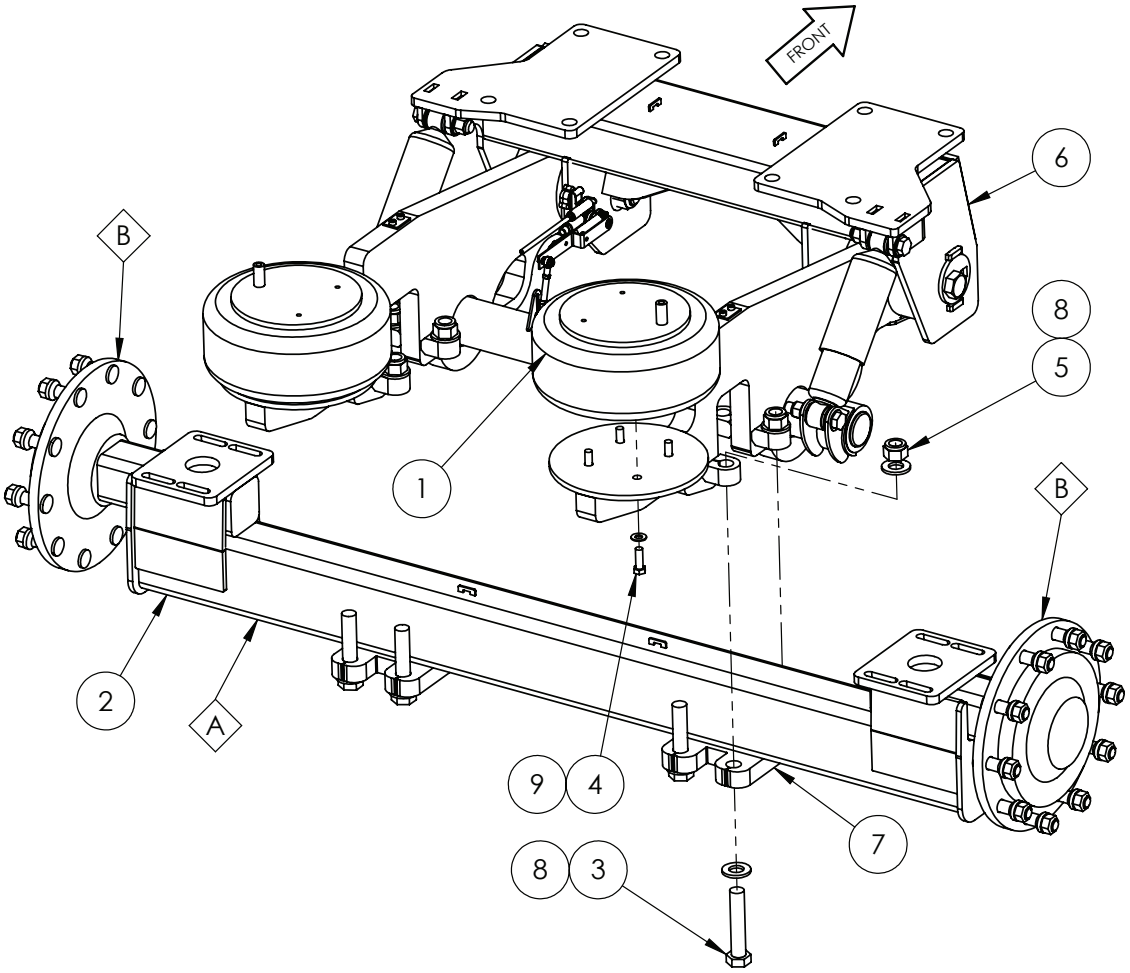

UNBRAKED AXLES

IF DESCRIPTION PREFIX IS ASSEMBLY DRAWING ONLY OR PRODUCTION DRAWING ONLY THE ITEM IS NOT FOR SALE

ITEM	PART NUMBER	DESCRIPTION	QTY
1	GA5005311	AIR SPRING HT230 SINGLE AIR STUD	2
2	GA4603155	AXLE, 2m, UNBRAKED, SUIT 5000L & 6500L, PRAIRIE PRO, 2021	1
3	GA5006031	BOLT 1" X 5" UNC GR8 ZP	8
4	GA5006167	BOLT 1/2 UNC X 1 1/2 GR8 ZP	8
5	GA5012439	NUT 1" NYLOC UNC ZP	8
6	GA4951095	SUSPENSION ASSEMBLY, 5000 & 6500L, PRAIRIE PRO, 2021	1
7	GA4632050	SUSPENSION NARROW RETAINER	2
8	GA5017659	WASHER 1 FLAT ZP HD (5mm THICK)	16
9	GA5017673	WASHER 1/2" HIGH TENSILE	8
GA6101140 GOLDACRES		SUSPENSION ASSEMBLY, CONFIGURABLE, 5000 & 6500L, PRAIRIE PRO, 2021	REV 02

Suspension Assembly, 2mt, Air-Bag, Braked Axle 5000L - 6500L

AXLE WIDTH 2M

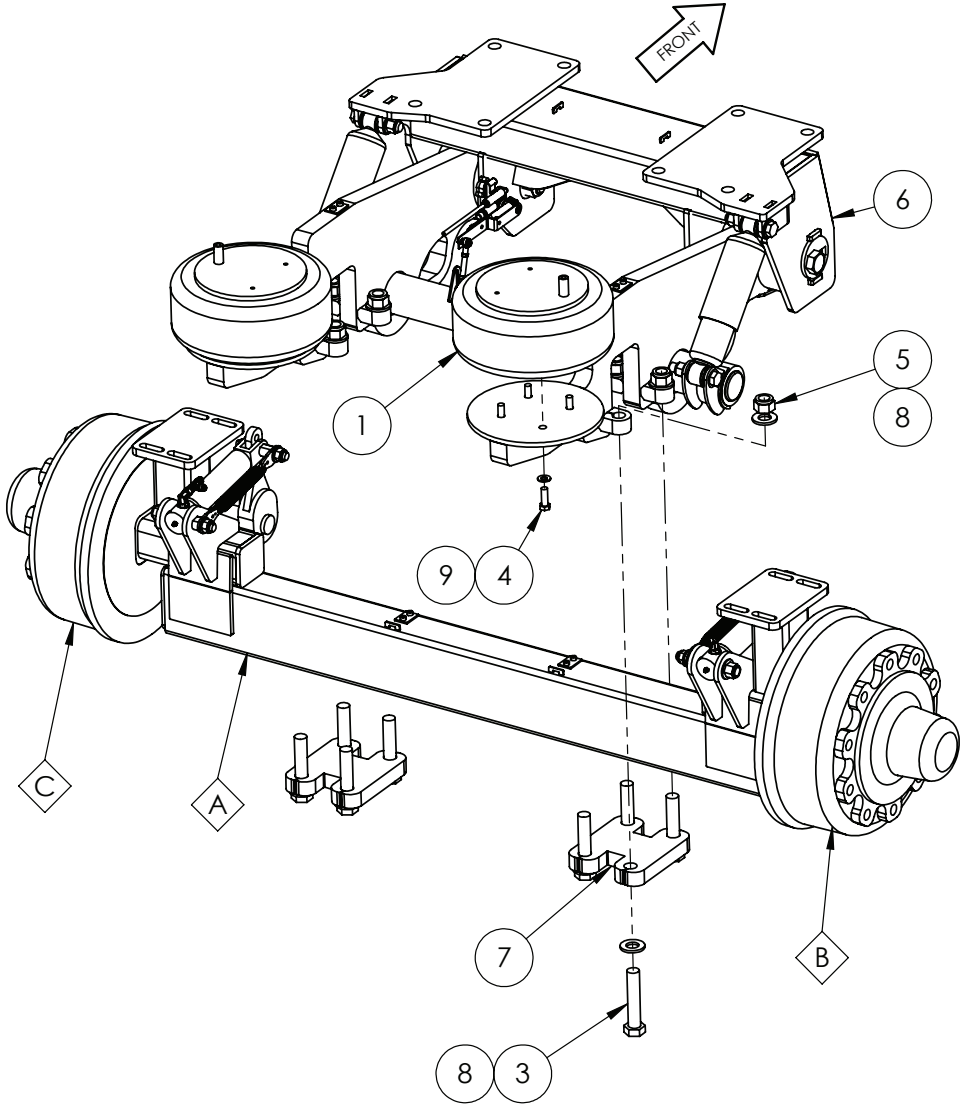

BRAKED AXLES

ITEM	PART NUMBER	DESCRIPTION	QTY
A	GA4603165	AXLE, 2m, BRAKED, SUIT 5000L & 6500L, PRAIRIE PRO, 2021	-
A	GA4603170	AXLE, 3m, BRAKED, SUIT 5000L & 6500L, PRAIRIE PRO, 2021	-
B	GA5053260	STUB AXLE, 10 STUD 335 PCD, 90 SERIES HUB, RH, BRAKED, ADR	1
C	GA5053261	STUB AXLE, 10 STUD 335 PCD, 90 SERIES HUB, LH, BRAKED, ADR	1

IF DESCRIPTION PREFIX IS ASSEMBLY DRAWING ONLY OR PRODUCTION DRAWING ONLY THE ITEM IS NOT FOR SALE

ITEM	PART NUMBER	DESCRIPTION	QTY
1	GA5005311	AIR SPRING HT230 SINGLE AIR STUD	2
2	GA4951265	AXLE ASSEMBLY, 2M, BRAKED, SUIT 5000L & 6500L, PRAIRIE PRO, 2021	1
3	GA5006031	BOLT 1" X 5" UNC GR8 ZP	8
4	GA5006167	BOLT 1/2 UNC X 1 1/2 GR8 ZP	8
5	GA5012439	NUT 1" NYLOC UNC ZP	8
6	GA4951095	SUSPENSION ASSEMBLY, 5000 & 6500L, PRAIRIE PRO, 2021	1
7	GA4632050	SUSPENSION NARROW RETAINER	2
8	GA5017659	WASHER 1 FLAT ZP HD (5mm THICK)	16
9	GA5017673	WASHER 1/2" HIGH TENSILE	8
GA6101140 GOLDACRES		SUSPENSION ASSEMBLY, CONFIGURABLE, 5000 & 6500L, PRAIRIE PRO, 2021	REV 02

Suspension Assembly, 3mt, Air-Bag, Un-Braked Axle 5000L - 6500L

AXLE WIDTH 3M

ITEM	PART NUMBER	DESCRIPTION	QTY
A	GA4603155	AXLE, 2m, UNBRAKED, SUIT 5000L & 6500L, PRAIRIE PRO, 2021	-
A	GA4603160	AXLE, 3m, UNBRAKED, SUIT 5000L & 6500L, PRAIRIE PRO, 2021	-
A	GA4603275	AXLE, CUSTOM WIDTH, UNBRAKED, SUIT 5000L & 6500L, PRAIRIE PRO, SERIES 2, REFER TO BUILD SHEET	-
B	GA5018119	STUB AXLE, 90 SERIES, 10 STUD 335mm PCD, 350mm FACE TO STUB, ADR	2

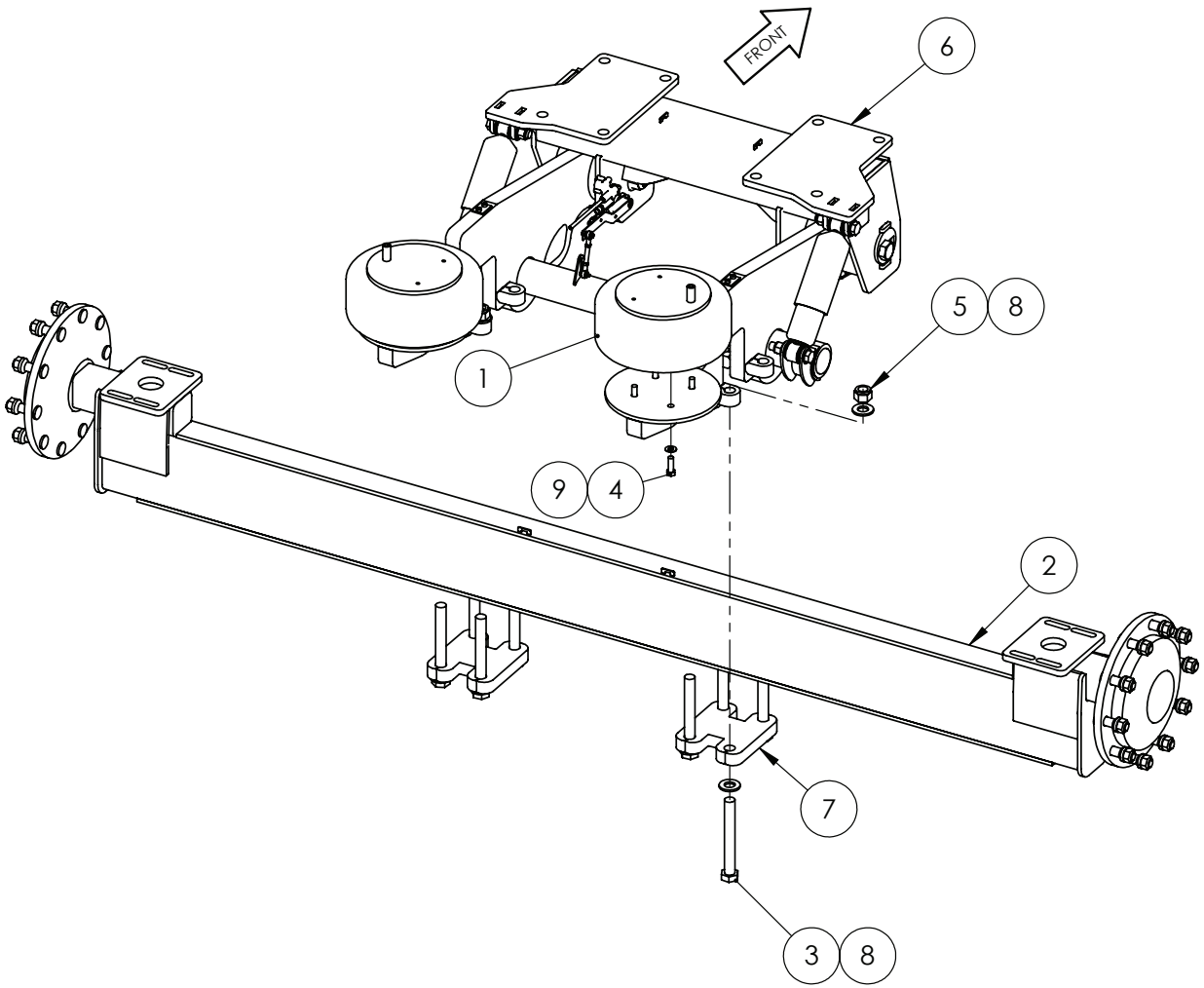

UNBRAKED AXLES

IF DESCRIPTION PREFIX IS ASSEMBLY DRAWING ONLY OR PRODUCTION DRAWING ONLY THE ITEM IS NOT FOR SALE			
ITEM	PART NUMBER	DESCRIPTION	QTY.
1	GA5005311	AIR SPRING HT230 SINGLE AIR STUD	2
2	GA4603160	AXLE, 3m, UNBRAKED, SUIT 5000L & 6500L, PRAIRIE PRO, 2021	1
3	GA5006151	BOLT 1 UNF 12 TPI X 8 GR8 ZP	8
4	GA5006167	BOLT 1/2 UNC X 1 1/2 GR8 ZP	8
5	GA5012439	NUT 1" NYLOC UNC ZP	8
6	GA4951095	SUSPENSION ASSEMBLY, 5000 & 6500L, PRAIRIE PRO, 2021	1
7	GA4632050	SUSPENSION NARROW RETAINER	2
8	GA5017659	WASHER 1 FLAT ZP HD (5mm THICK)	16
9	GA5017673	WASHER 1/2" HIGH TENSILE	8
GA6101140 GOLDACRES		SUSPENSION ASSEMBLY, CONFIGURABLE, 5000 & 6500L, PRAIRIE PRO, 2021	REV 02

Suspension Assembly, 3mt, Air-Bag, Braked Axle 5000L - 6500L

AXLE WIDTH 3M

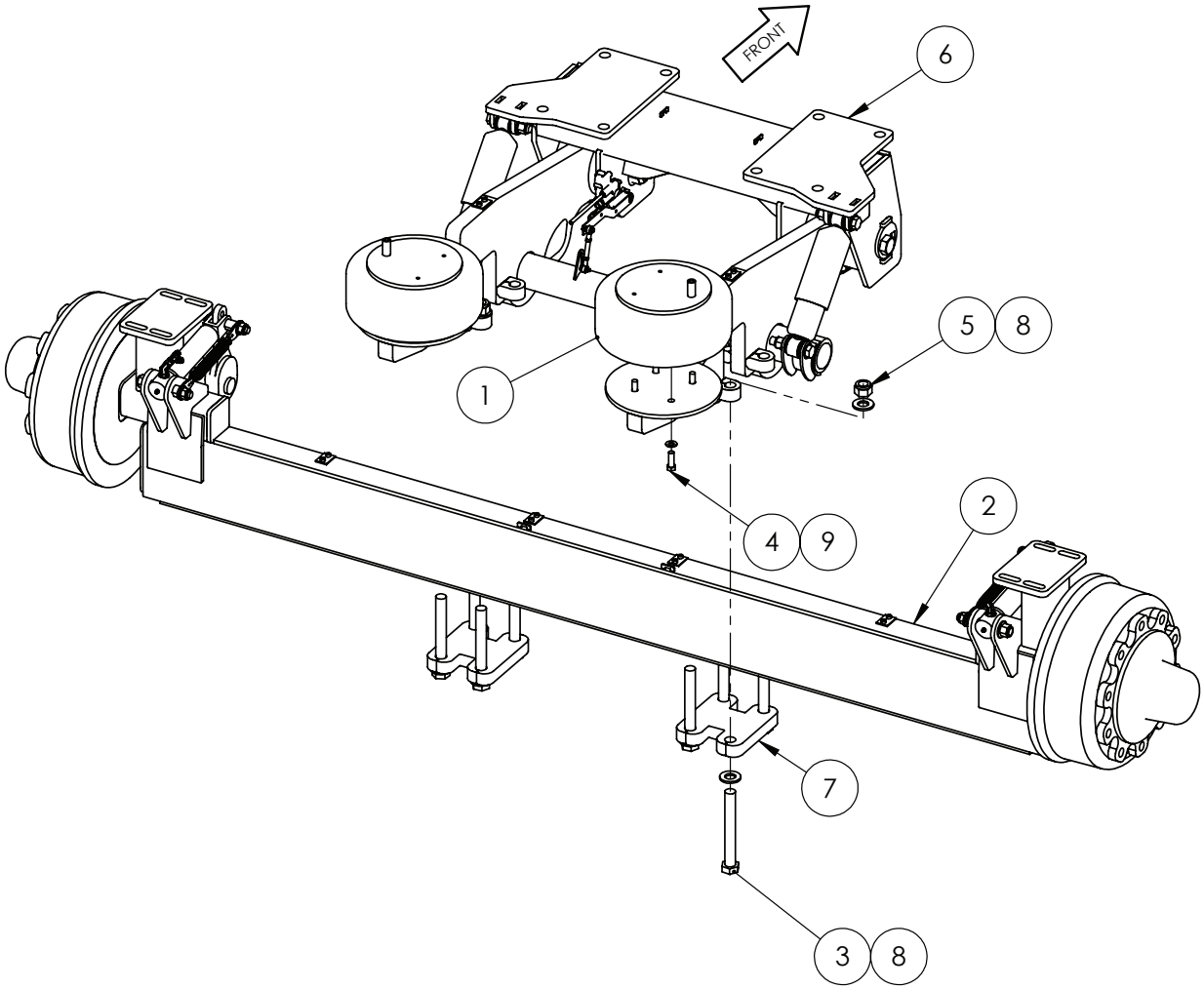

BRAKED AXLES

ITEM	PART NUMBER	DESCRIPTION	QTY
A	GA4603165	AXLE, 2m, BRAKED, SUIT 5000L & 6500L, PRAIRIE PRO, 2021	-
A	GA4603170	AXLE, 3m, BRAKED, SUIT 5000L & 6500L, PRAIRIE PRO, 2021	-
B	GA5053260	STUB AXLE, 10 STUD 335 PCD, 90 SERIES HUB, RH, BRAKED, ADR	1
C	GA5053261	STUB AXLE, 10 STUD 335 PCD, 90 SERIES HUB, LH, BRAKED, ADR	1

IF DESCRIPTION PREFIX IS ASSEMBLY DRAWING ONLY OR PRODUCTION DRAWING ONLY THE ITEM IS NOT FOR SALE

ITEM	PART NUMBER	DESCRIPTION	QTY.
1	GA5005311	AIR SPRING HT230 SINGLE AIR STUD	2
2	GA4951270	AXLE ASSEMBLY, 3M, BRAKED, SUIT 5000L & 6500L, PRAIRIE PRO, 2021	1
3	GA5006151	BOLT 1 UNF 12 TPI X 8 GR8 ZP	8
4	GA5006167	BOLT 1/2 UNC X 1 1/2 GR8 ZP	8
5	GA5012439	NUT 1" NYLOC UNC ZP	8
6	GA4951095	SUSPENSION ASSEMBLY, 5000 & 6500L, PRAIRIE PRO, 2021	1
7	GA4632050	SUSPENSION NARROW RETAINER	2
8	GA5017659	WASHER 1 FLAT ZP HD (5mm THICK)	16
9	GA5017673	WASHER 1/2" HIGH TENSILE	8
GA6101140 GOLDACRES		SUSPENSION ASSEMBLY, CONFIGURABLE, 5000 & 6500L, PRAIRIE PRO, 2021	REV 02

Suspension Assembly, 5000L - 6500L

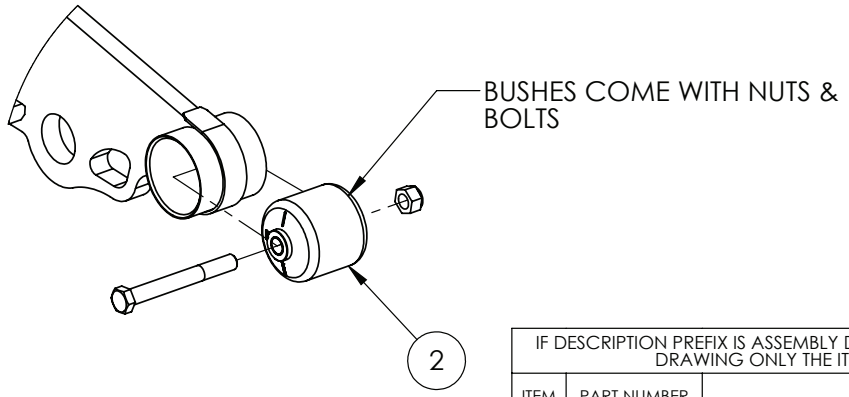

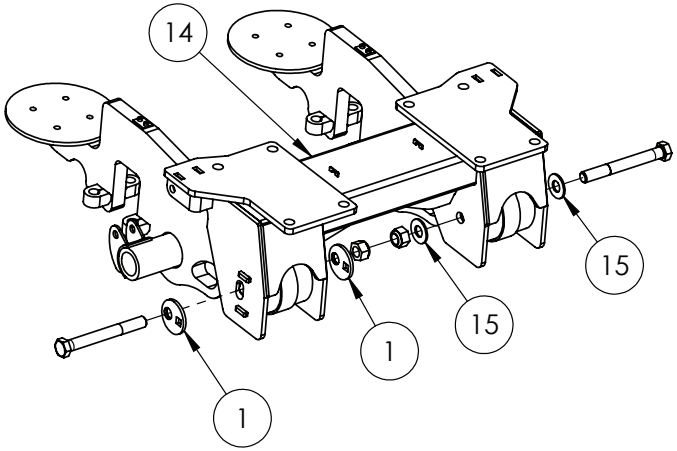

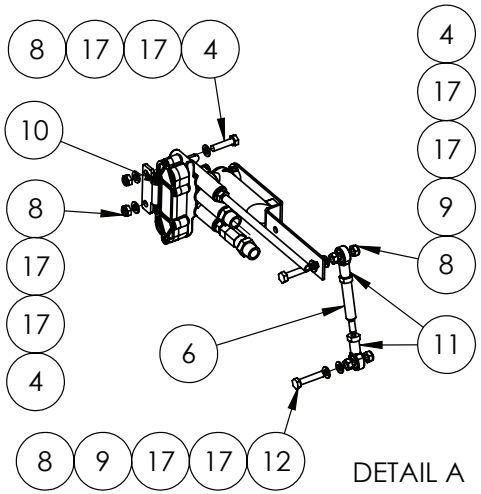

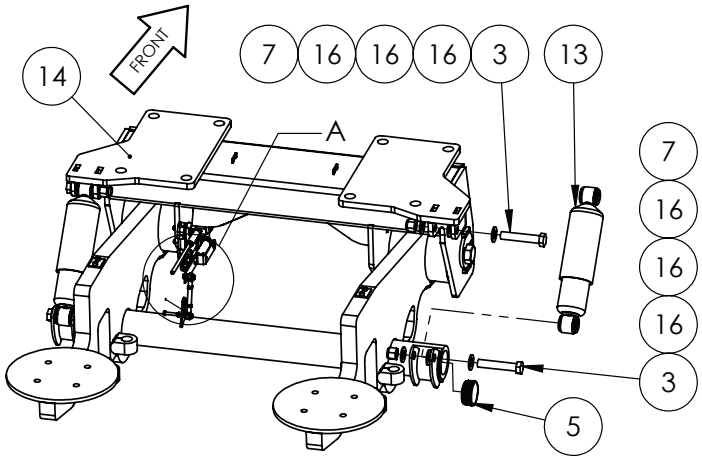

IF DESCRIPTION PREFIX IS ASSEMBLY DRAWING ONLY OR PRODUCTION DRAWING ONLY THE ITEM IS NOT FOR SALE			
ITEM	PART NUMBER	DESCRIPTION	QTY
1	GA4524630	AIR BAG ECCENTRIC ALIGNMENT PLATE MY13	2
2	GA5071010	BI-FUNCTIONAL BUSH, TRAILING AIRBAG SUSPENSION FRAME, INCLUDES BOLT, NUT AND SLEEVE 4PK	2
3	GA5049490	BOLT 3/4" UNC X 4" HT ZP	4
4	GA5004073	BOLT M6 X 25 GR8.8 ZP	3
5	GA5051366	INSERT ROUND 63.5 X 1.25 - 2.0mm	2
6	GA4551275	LINK ROD, RIDE HEIGHT, G6, MY20	1
7	GA5048430	NUT 3/4 UNC NYLOC ZP	4
8	GA5048115	NUT M6 NYLOC ZP	4
9	GA5049030	NUT M6 SS	2
10	GA4951385	RIDE HEIGHT CONTROL VALVE, ASSEMBLY, PRAIRIE PRO MY21	1
11	GA5052725	ROD END 6mm FEMALE	2
12	GA5004079	SET SCREW M6 X 30 GR8.8 ZP	1
13	GA5015139	SHOCK ABSORBER, DOUBLE EYE, 19mm EYE, 82mm OD, BLACK	2
14	GA4603060	SUSPENSION AXLE, FRAME, 5000L AND 6500L, PRAIRIE PRO, 2021	1
15	GA5017653	WASHER 1 1/8 X 2 1/2 X 7G FLAT SS	2
16	GA5001741	WASHER 20mm FLAT SS HD	12
17	GA5004437	WASHER 6mm FLAT SS	8
GA4951095 GOLDACRES		SUSPENSION ASSEMBLY, 5000 & 6500L, PRAIRIE PRO, 2021	REV 01.B

Axle Assembly, Rigid, 2mt Braked Axle, 5000L - 6500L

ITEM	PART NUMBER	DESCRIPTION	QTY
A	GA5053261	STUB AXLE, 10 STUD 335 PCD, 90 SERIES HUB, LH, BRAKED, ADR	-
B	GA5053260	STUB AXLE, 10 STUD 335 PCD, 90 SERIES HUB, RH, BRAKED, ADR	-

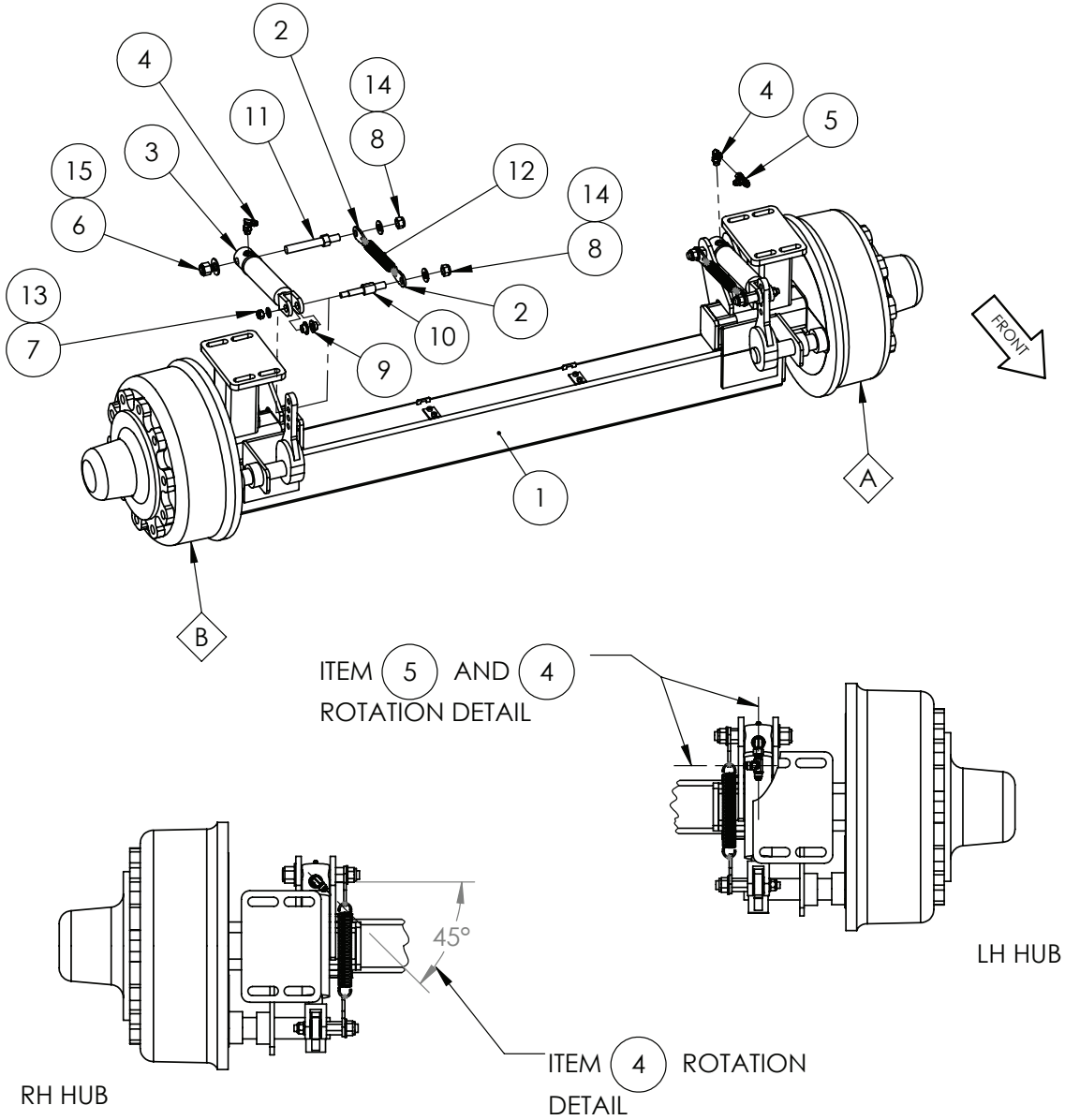

IF DESCRIPTION PREFIX IS ASSEMBLY DRAWING ONLY OR PRODUCTION DRAWING ONLY THE ITEM IS NOT FOR SALE			
ITEM	PART NUMBER	DESCRIPTION	QTY
1	GA4603165	AXLE, 2m, BRAKED, SUIT 5000L & 6500L, PRAIRIE PRO, SERIES 2	1
2	F70121A	HOPPER SPRING RETAINER	4
3	GA5016121	HYDRAULIC RAM 1.5" BORE, 1" ROD, 100mm STROKE	2
4	GA3500716	HYDRAULIC ADAPTOR, ELBOW, 90 DEGREE, 9/16" JIC MALE X 9/16" UN MALE O-RING, S91-0909	2
5	GA3500144	HYDRAULIC ADAPTOR, TEE, 9/16" JIC MALE X 9/16" JIC MALE X 9/16" JIC FEMALE SWIVEL, S67-090909	1
6	GA5048430	NUT 3/4 UNC NYLOC ZP	2
7	GA5012461	NUT M12 NYLOC ZP	2
8	GA5001029	NUT M16 NYLOC ZP	4
9	MACH0200	SPACER BUSH FOR RAM CLEVIS	4
10	MACH0202	SPRING AND RAM MOUNTING PIN (CRANK END)	2
11	MACH0201	SPRING AND RAM MOUNTING PIN (MOUNTING END)	2
12	GA5007755	SPRING, TENSION, 25 OD X 180 LONG X 3mm, SUIT TRAILER BRAKES	2
13	GA5000577	WASHER 12mm FLAT SS HD	2
14	GA5001043	WASHER 16mm FLAT SS HD	4
15	GA5001045	WASHER, 3/4" FLAT, HD ZP	2
GA4951265 GOLDACRES		AXLE ASSEMBLY, 2M, BRAKED, SUIT 5000L & 6500L, PRAIRIE PRO, 2021	REV 01.B

Axle Assembly, Rigid, 3mt Braked Axle, 5000L - 6500L

ITEM	PART NUMBER	DESCRIPTION	QTY
A	GA5053261	STUB AXLE, 10 STUD 335 PCD, 90 SERIES HUB, LH, BRAKED, ADR	-
B	GA5053260	STUB AXLE, 10 STUD 335 PCD, 90 SERIES HUB, RH, BRAKED, ADR	-

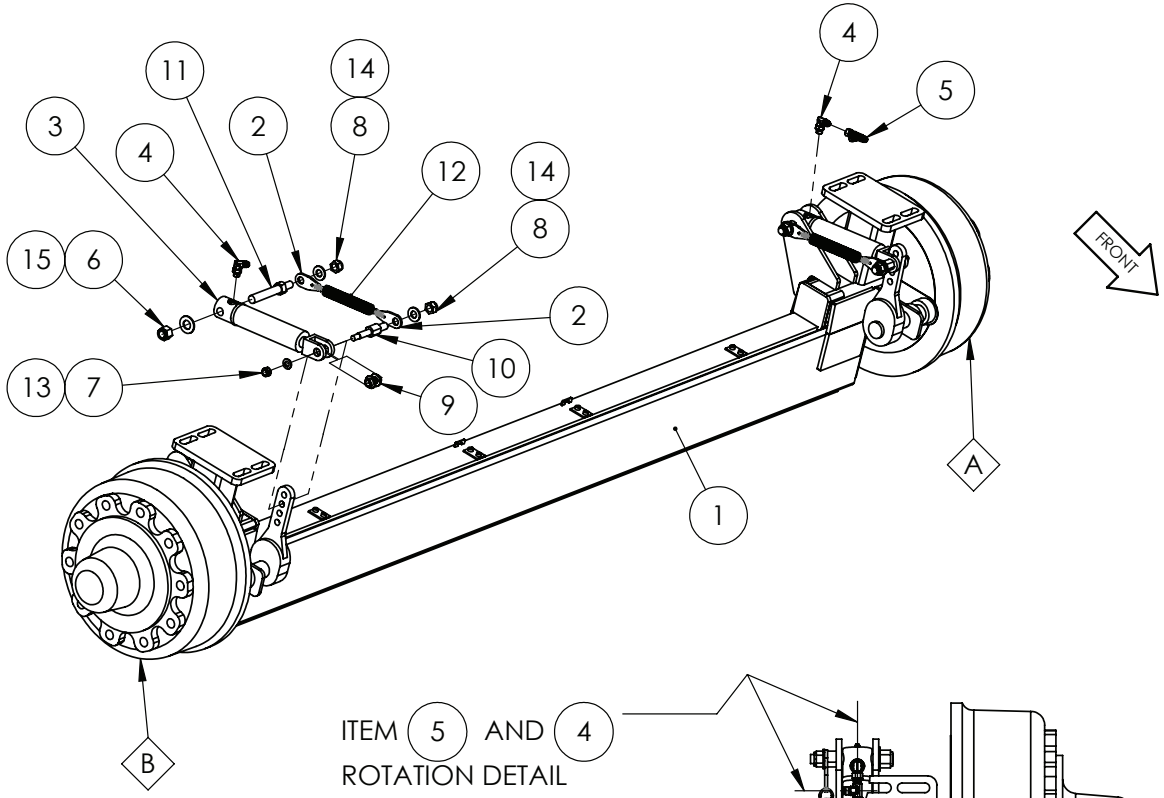

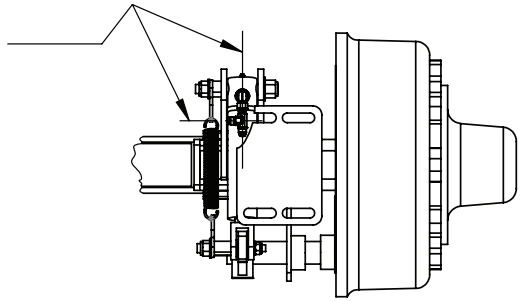

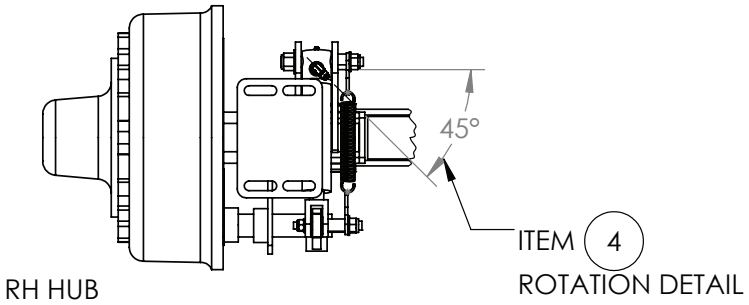

IF DESCRIPTION PREFIX IS ASSEMBLY DRAWING ONLY OR PRODUCTION DRAWING ONLY THE ITEM IS NOT FOR SALE

ITEM	PART NUMBER	DESCRIPTION	QTY
1	GA4603170	AXLE, 3m, BRAKED, SUIT 5000L & 6500L, PRAIRIE PRO, SERIES 2	1
2	F70121A	HOPPER SPRING RETAINER	4
3	GA5016121	HYDRAULIC RAM 1.5" BORE, 1" ROD, 100mm STROKE	2
4	GA3500716	HYDRAULIC ADAPTOR, ELBOW, 90 DEGREE, 9/16" JIC MALE X 9/16" UN MALE O-RING, S91-0909	2
5	GA3500144	HYDRAULIC ADAPTOR, TEE, 9/16" JIC MALE X 9/16" JIC MALE X 9/16" JIC FEMALE SWIVEL, S67-090909	1
6	GA5048430	NUT 3/4 UNC NYLOC ZP	2
7	GA5012461	NUT M12 NYLOC ZP	2
8	GA5001029	NUT M16 NYLOC ZP	4
9	MACH0200	SPACER BUSH FOR RAM CLEVIS	4
10	MACH0202	SPRING AND RAM MOUNTING PIN (CRANK END)	2
11	MACH0201	SPRING AND RAM MOUNTING PIN (MOUNTING END)	2
12	GA5007755	SPRING, TENSION, 25 OD X 180 LONG X 3mm, SUIT TRAILER BRAKES	2
13	GA5000577	WASHER 12mm FLAT SS HD	2
14	GA5001043	WASHER 16mm FLAT SS HD	4
15	GA5001045	WASHER, 3/4" FLAT, HD ZP	2
GA4951270 GOLDACRES	AXLE ASSEMBLY, 3M, BRAKED, SUIT 5000L & 6500L, PRAIRIE PRO, 2021		REV 01.B

Suspension Assembly, Un-Braked Axle, 8500L - 10,000L

ITEM	PART NUMBER	DESCRIPTION	QTY
A	GA4603175	AXLE, 2.2m, UNBRAKED, SUIT 8500L, 2021	-
A	GA4603180	AXLE, 3m, UNBRAKED, SUIT 8500L, PRAIRIE PRO, 2021	-
B	GA5050300	STUB AXLE, 110 SERIES, UNBRAKED, ADR	2

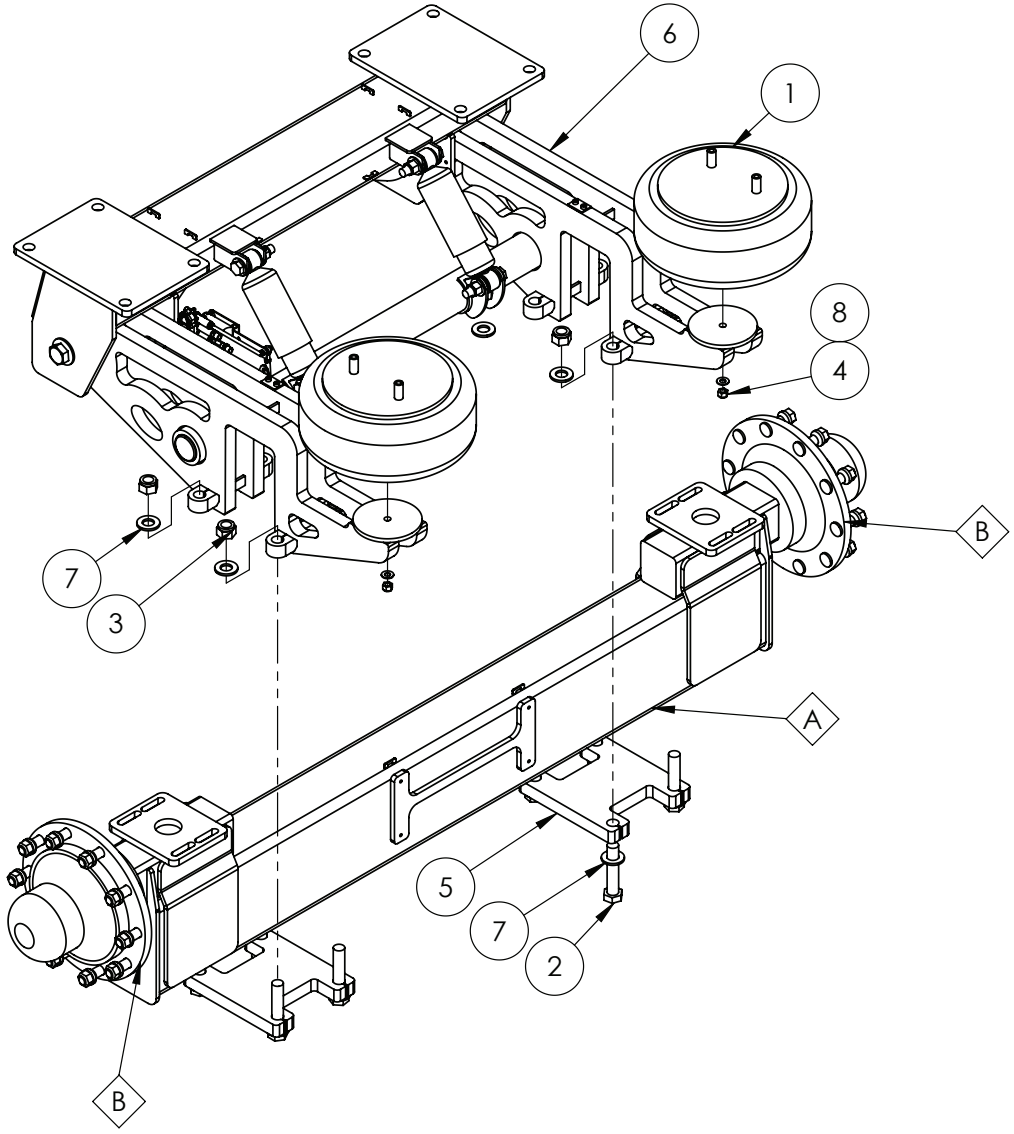

UN-BRAKED AXLE

8500LT TRAILER ONLY

IF DESCRIPTION PREFIX IS ASSEMBLY DRAWING ONLY OR PRODUCTION DRAWING ONLY THE ITEM IS NOT FOR SALE			
ITEM	PART NUMBER	DESCRIPTION	QTY
1	GA5005115	AIR SPRING DUAL STUD	2
2	GA5006031	BOLT 1" X 5" UNC GR8 ZP	8
3	GA5012439	NUT 1" NYLOC UNC ZP	8
4	GA5050580	NUT 1/2 UNC NYLOC ZP	2
5	GA4410375	PLATE, AXLE RETAINER, 8500 & 10000L, PRAIRIE PRO, 2021	2
6	GA4951100	SUSPENSION ASSEMBLY, 8500 & 10000L, PRAIRIE PRO, 2021	1
7	GA5017659	WASHER 1 FLAT ZP HD (5mm THICK)	16
8	GA5017673	WASHER 1/2" HIGH TENSILE	2
GA6101150 GOLDACRES		SUSPENSION ASSEMBLY, CONFIGURABLE, 8500 & 10,000L, PRAIRIE PRO, 2021	REV 01.C

Suspension Assembly, Braked Axle, 8500L - 10,000L

ITEM	PART NUMBER	DESCRIPTION	QTY
A	GA4603190	AXLE, 3m, BRAKED, SUIT 8500L & 10,000L, PRAIRIE PRO, 2021	-
A	GA4603185	AXLE, 2.2m, BRAKED, SUIT 8500L & 10,000L, PRAIRIE PRO, 2021	-
B	GA1500070	STUB AXLE, 10 STUD 335 PCD, 150 SERIES, BRAKED, LH	1
C	GA1500071	STUB AXLE, 10 STUD 335 PCD, 150 SERIES, BRAKED, RH	1

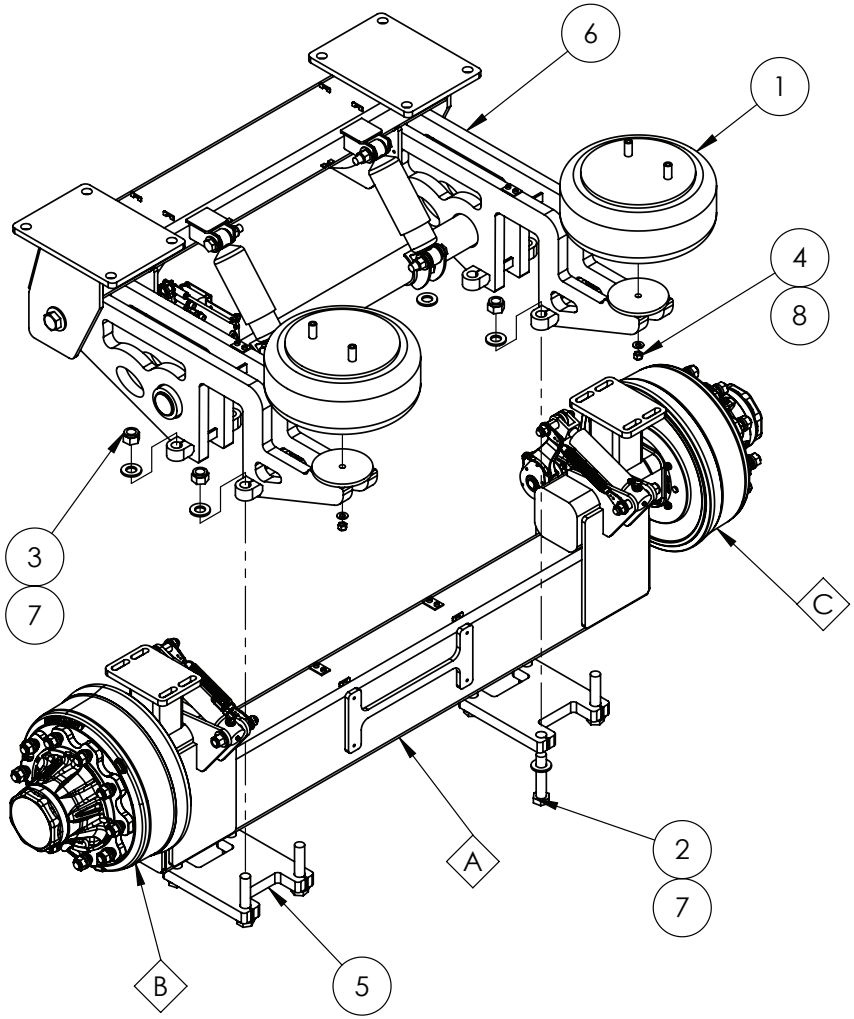

BRAKED AXLES

10,000LT TRAILER - ALL AXLES WIDTHS FITTED WITH BRAKES AS STANDARD

IF DESCRIPTION PREFIX IS ASSEMBLY DRAWING ONLY OR PRODUCTION DRAWING ONLY THE ITEM IS NOT FOR SALE			
ITEM	PART NUMBER	DESCRIPTION	QTY
1	GA5005115	AIR SPRING DUAL STUD	2
2	GA5006031	BOLT 1" X 5" UNC GR8 ZP	8
3	GA5012439	NUT 1" NYLOC UNC ZP	8
4	GA5050580	NUT 1/2 UNC NYLOC ZP	2
5	GA4410375	PLATE, AXLE RETAINER, 8500 & 10000L, PRAIRIE PRO, 2021	2
6	GA4951100	SUSPENSION ASSEMBLY, 8500 & 10000L, PRAIRIE PRO, 2021	1
7	GA5017659	WASHER 1 FLAT ZP HD (5mm THICK)	16
8	GA5017673	WASHER 1/2" HIGH TENSILE	2
GA6101150 GOLDACRES		SUSPENSION ASSEMBLY, CONFIGURABLE, 8500 & 10,000L, PRAIRIE PRO, 2021	REV 01.C

Suspension Assembly, Ride Height Control & Suspension, 8500L - 10,000L

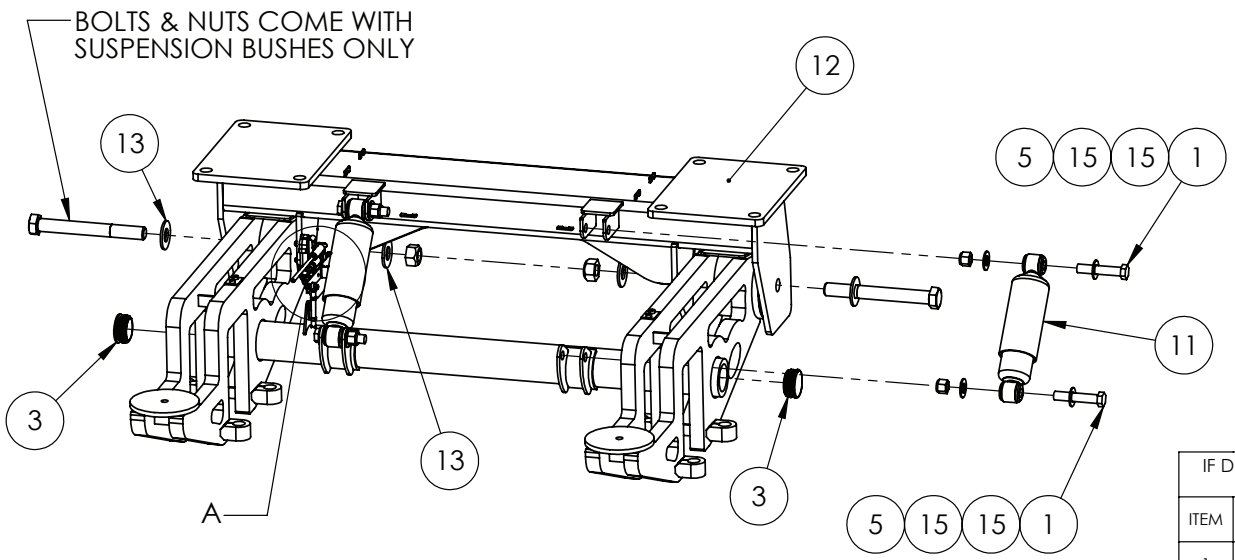

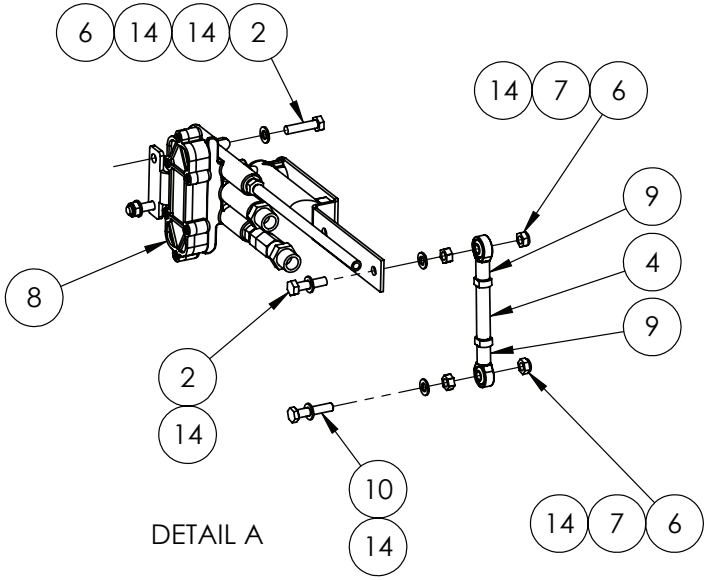

IF DESCRIPTION PREFIX IS ASSEMBLY DRAWING ONLY OR PRODUCTION DRAWING ONLY THE ITEM IS NOT FOR SALE			
ITEM	PART NUMBER	DESCRIPTION	QTY
1	GA5049490	BOLT 3/4" UNC X 4" HT ZP	4
2	GA5004073	BOLT M6 X 25 GR8.8 ZP	3
3	GA5051366	INSERT ROUND 63.5 X 1.25 - 2.0mm	2
4	GA4551275	LINK ROD, RIDE HEIGHT, G6, MY20	1
5	GA5048430	NUT 3/4 UNC NYLOC ZP	4
6	GA5048115	NUT M6 NYLOC ZP	4
7	GA5004397	NUT M6 ZP	2
8	GA4951385	RIDE HEIGHT CONTROL VALVE, ASSEMBLY, PRAIRIE PRO MY21	1
9	GA5052725	ROD END 6mm FEMALE	2
10	GA5004079	SET SCREW M6 X 30 GR8.8 ZP	1
11	GA5015139	SHOCK ABSORBER, DOUBLE EYE, 19mm EYE, 82mm OD, BLACK	2
12	GA4603075	SUSPENSION AXLE, FRAME, 8500L AND 10000L, PRAIRIE PRO, 2021	1
13	GA5017653	WASHER 1 1/8 X 2 1/2 X 7G FLAT SS	4
14	GA5004437	WASHER 6mm FLAT SS	8
15	GA5001045	WASHER, 3/4" FLAT, HD ZP	8
GA4951100 GOLDACRES		SUSPENSION ASSEMBLY, 8500 & 10000L, PRAIRIE PRO, 2021	REV 01

Axle, 2.2mt, Braked, 8500L - 10,000L

ITEM	PART NUMBER	DESCRIPTION	QTY
A	GA1500070	STUB AXLE, 10 STUD 335 PCD, 150 SERIES, BRAKED, LH	1
B	GA1500071	STUB AXLE, 10 STUD 335 PCD, 150 SERIES, BRAKED, RH	1

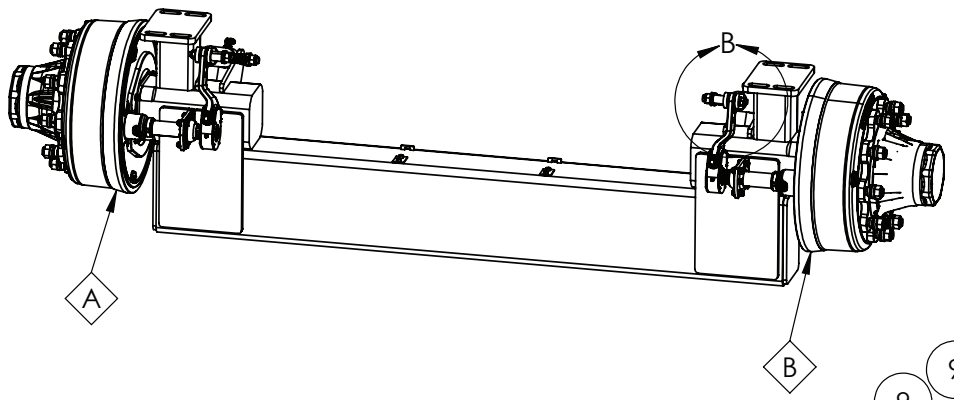

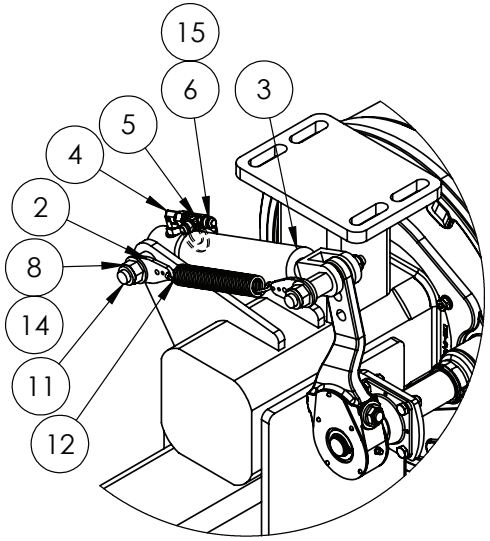

DETAIL A

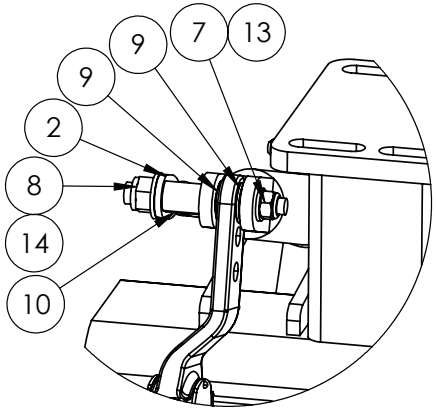

DETAIL B

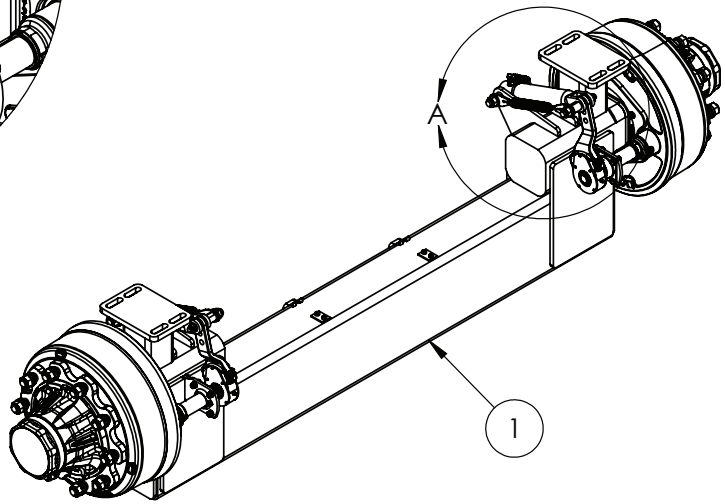

IF DESCRIPTION PREFIX IS ASSEMBLY DRAWING ONLY OR PRODUCTION DRAWING ONLY THE ITEM IS NOT FOR SALE

ITEM	PART NUMBER	DESCRIPTION	QTY
1	GA4603185	AXLE, 2.2m, BRAKED, SUIT 8500L & 10,000L, PRAIRIE PRO, 2021	1
2	F70121A	HOPPER SPRING RETAINER	4
3	GA5016121	HYDRAULIC RAM 1.5" BORE, 1" ROD, 100mm STROKE	2
4	GA3500716	HYDRAULIC ADAPTOR, ELBOW, 90 DEGREE, 9/16" JIC MALE X 9/16" UN MALE O-RING, S91-0909	2
5	GA3500144	HYDRAULIC ADAPTOR, TEE, 9/16" JIC MALE X 9/16" JIC MALE X 9/16" JIC FEMALE SWIVEL, S67-090909	1
6	GA5048430	NUT 3/4 UNC NYLOC ZP	2
7	GA5012461	NUT M12 NYLOC ZP	2
8	GA5001029	NUT M16 NYLOC ZP	4
9	MACH0200	SPACER BUSH FOR RAM CLEVIS	4
10	MACH0202	SPRING AND RAM MOUNTING PIN (CRANK END)	2
11	MACH0201	SPRING AND RAM MOUNTING PIN (MOUNTING END)	2
12	GA5007755	SPRING, TENSION, 25 OD X 180 LONG X 3mm, SUIT TRAILER BRAKES	2
13	GA5000577	WASHER 12mm FLAT SS HD	2
14	GA5001043	WASHER 16mm FLAT SS HD	4
15	GA5001045	WASHER, 3/4" FLAT, HD ZP	2
GA4951185 GOLDACRES		AXLE ASSEMBLY, 2.2M, BRAKED, SUIT 8500L & 10000L, PRAIRIE PRO, 2021	REV 01

Axle, 3mt, Braked, 8500L - 10,000L

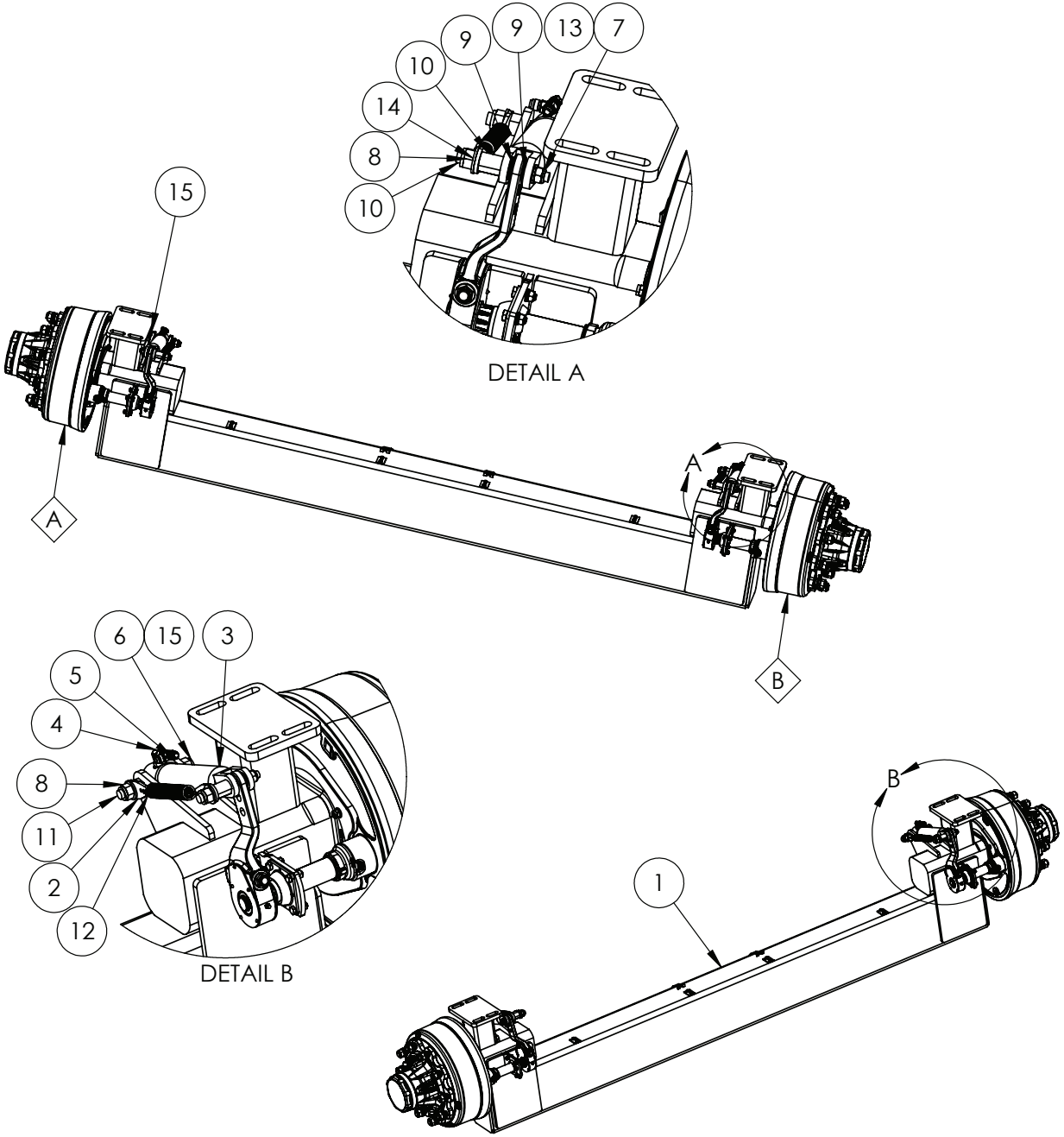

ITEM	PART NUMBER	DESCRIPTION	QTY
A	GA1500070	STUB AXLE, 10 STUD 335 PCD, 150 SERIES, BRAKED, LH	1
B	GA1500071	STUB AXLE, 10 STUD 335 PCD, 150 SERIES, BRAKED, RH	1

IF DESCRIPTION PREFIX IS ASSEMBLY DRAWING ONLY OR PRODUCTION DRAWING ONLY THE ITEM IS NOT FOR SALE

ITEM	PART NUMBER	DESCRIPTION	QTY
1	GA4603190	AXLE, 3m, BRAKED, SUIT 8500L & 10,000L, PRAIRIE PRO, 2021	1
2	F70121A	HOPPER SPRING RETAINER	4
3	GA5016121	HYDRAULIC RAM 1.5" BORE, 1" ROD, 100mm STROKE	2
4	GA3500716	HYDRAULIC ADAPTOR, ELBOW, 90 DEGREE, 9/16" JIC MALE X 9/16" UN MALE O-RING, S91-0909	2
5	GA3500144	HYDRAULIC ADAPTOR, TEE, 9/16" JIC MALE X 9/16" JIC MALE X 9/16" JIC FEMALE SWIVEL, S67-090909	1
6	GA5048430	NUT 3/4 UNC NYLOC ZP	2
7	GA5012461	NUT M12 NYLOC ZP	2
8	GA5001029	NUT M16 NYLOC ZP	4
9	MACH0200	SPACER BUSH FOR RAM CLEVIS	4
10	MACH0202	SPRING AND RAM MOUNTING PIN (CRANK END)	2
11	MACH0201	SPRING AND RAM MOUNTING PIN (MOUNTING END)	2
12	GA5007755	SPRING, TENSION, 25 OD X 180 LONG X 3mm, SUIT TRAILER BRAKES	2
13	GA5000577	WASHER 12mm FLAT SS HD	2
14	GA5001043	WASHER 16mm FLAT SS HD	4
15	GA5001045	WASHER, 3/4" FLAT, HD ZP	2
GA4951190 GOLDACRES		AXLE ASSEMBLY, 3M, BRAKED, SUIT 8500L & 10000L, PRAIRIE PRO, 2021	REV 00

Hub, 90 Series, Un-Braked

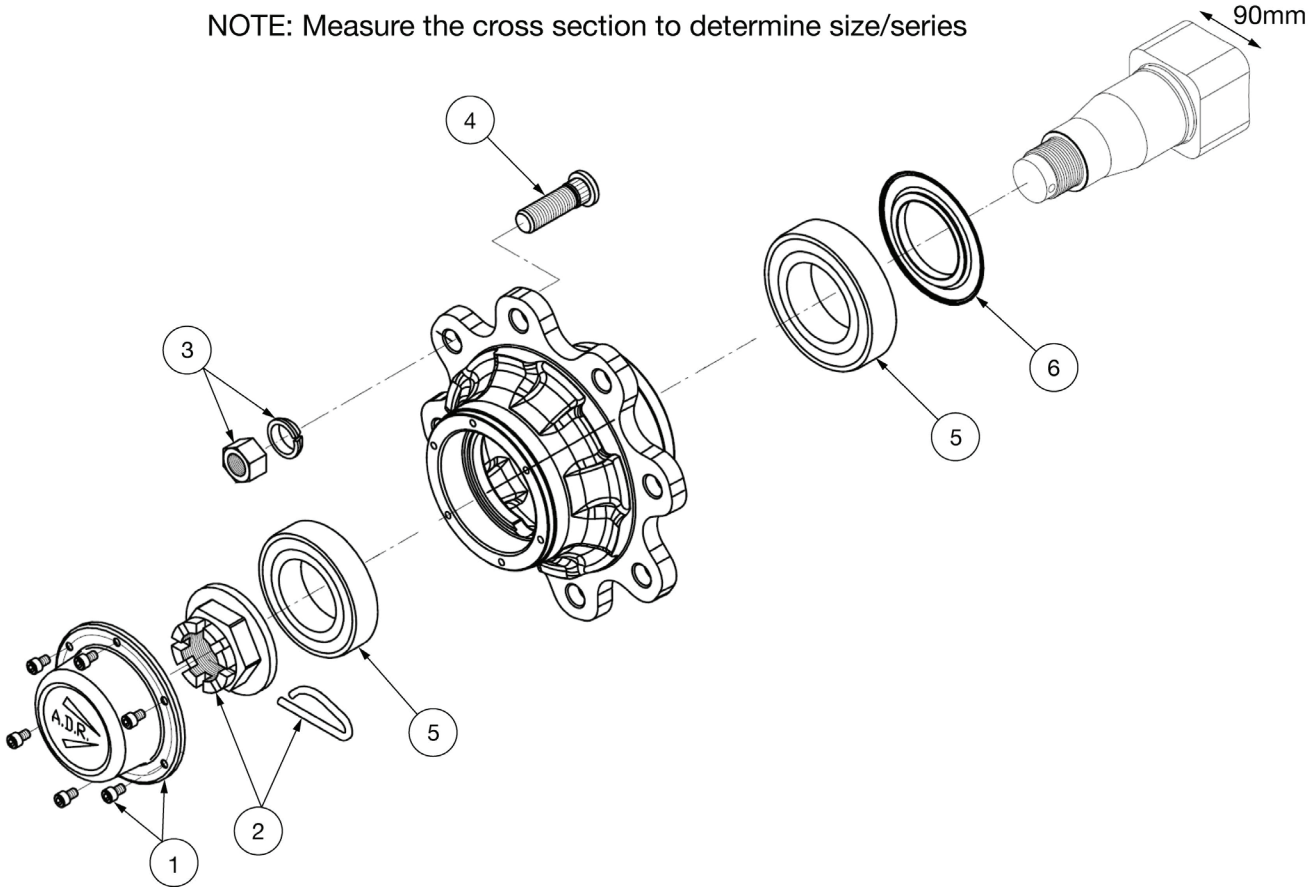

IF DESCRIPTION PREFIX IS ASSEMBLY DRAWING ONLY OR PRODUCTION DRAWING ONLY THE ITEM IS NOT FOR SALE			
ITEM	PART NUMBER	DESCRIPTION	QTY
-	GA5018119	STUB AXLE, 90 SERIES, 10 STUD 335mm PCD, 350mm FACE TO STUB, ADR	-
1	GA5052120	CAP KIT, 90 SERIES, ADR	1
2	GA5052190	CROWN NUT KIT, 80/90 SERIES, ADR	1
3	GA5052165	WHEEL NUT & WASHER KIT, M22 X 1.5mm, SUIT 90, 110 & 150 SERIES, 10 PACK	-
	GA5018892	WHEEL NUT AND WASHER, M22 X 1.5mm, QTY 1 EACH	8
	GA5018900	TAPERED SPRING WASHERS SUIT M22 WHEEL STUD (329F003)	8
-	GA5054675	CAP M20 HEX WHEEL NUT COVER	8
4	GA5052205	STUD WHEEL KIT, M22 X 1.5, 90, 100, 110 SERIES, ADR (SET OF 10)	1
5	GA5052200	BEARING KIT, 90 SERIES, ADR	1
6	GA5066405	SEAL, HEAVY DUTY, SUIT ADR 90 SERIES AXLES (EACH), 160 X 82 X 18mm	1
GA5018119 GOLDACRES		STUB AXLE, 90 SERIES, 10 STUD 335mm PCD, 350mm FACE TO STUB, ADR	REV

Hub, 110 Series, Un-Braked

NOTE: Measure the cross section to determine size/series.

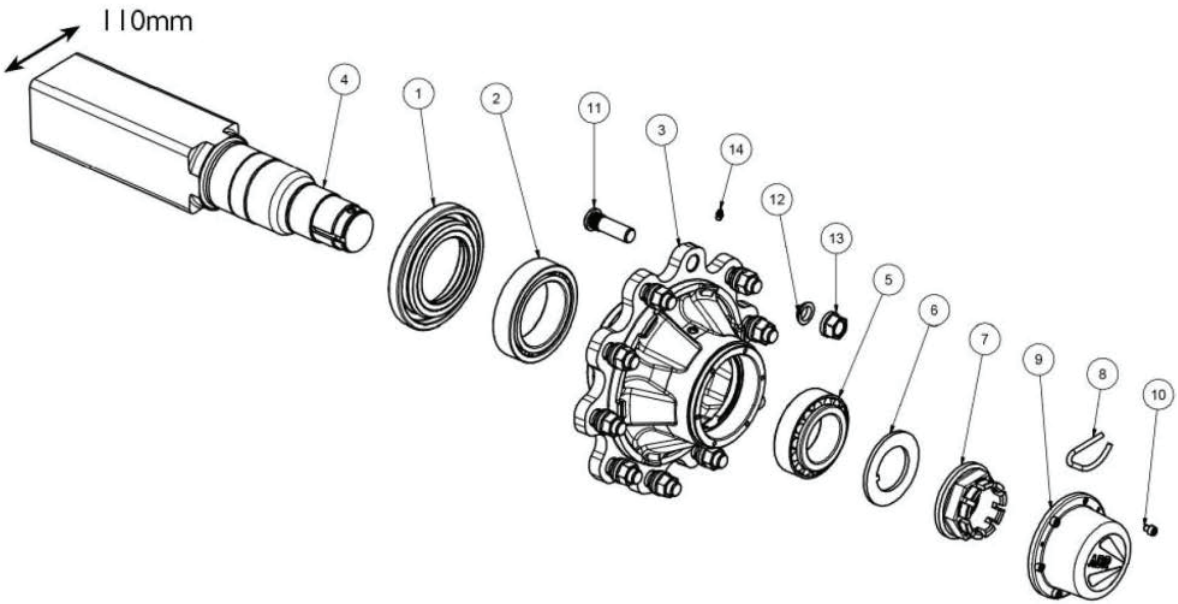

IF DESCRIPTION PREFIX IS ASSEMBLY DRAWING ONLY OR PRODUCTION DRAWING ONLY THE ITEM IS NOT FOR SALE			
ITEM	PART NUMBER	DESCRIPTION	QTY
1	GA5073545	GREASE SEAL W/DUST COVER, 110 SERIES, UNBRAKED, ADR, 5471502 SUPERSEDED TO 5471504, 190 OD X 102mm ID.	1
2	GA5073550	BEARING, TAPER ROLLER, REAR, 110 SERIES, UNBRAKED, ADR, 59133020	1
3	6ILV1002	HUB, 110 SERIES, UN-BRAKED, ADR, 59133215	1
4	GA5050300	STUB AXLE, 110 SERIES, UNBRAKED, ADR	1
5	GA5073555	BEARING, TAPER ROLLER, FRONT, 110 SERIES, UNBRAKED, ADR, 59133215	1
6	GA5073560	LOCK WASHER, 110 SERIES, ADR, 57B7002	1
7	GA5052140	CROWN NUT KIT, 110 SERIES, ADR, INCLUDES 2 NUTS & 2 PINS (ITEM NO. 8)	1
8			2
9	GA5052145	CAP KIT, 110 SERIES, ADR, INCLUDES 2 CAPS & 12 SCREWS (ITEM NO. 10)	1
10			12
11	GA5052205	STUD WHEEL KIT, M22 X 1.5, 90, 100, 110 SERIES, ADR (SET OF 10)	10
12	GA5018900	TAPERED SPRING WASHERS SUIT M22 WHEEL STUD (329F003)	10
13	GA5018892	WHEEL NUT, M22 X 1.5mm, HT & WASHER	10
	GA5052165	WHEEL NUT KIT, SUIT 90 / 110 SERIES STUB AXLE, ADR	-
14	GA5024086	GREASE NIPPLE, M8 STRAIGHT, 100 SERIES, ADR	1
GA5050300 GOLDACRES		STUB AXLE, 110 SERIES, UNBRAKED, ADR	REV 00

Hub, 110 Series, Braked

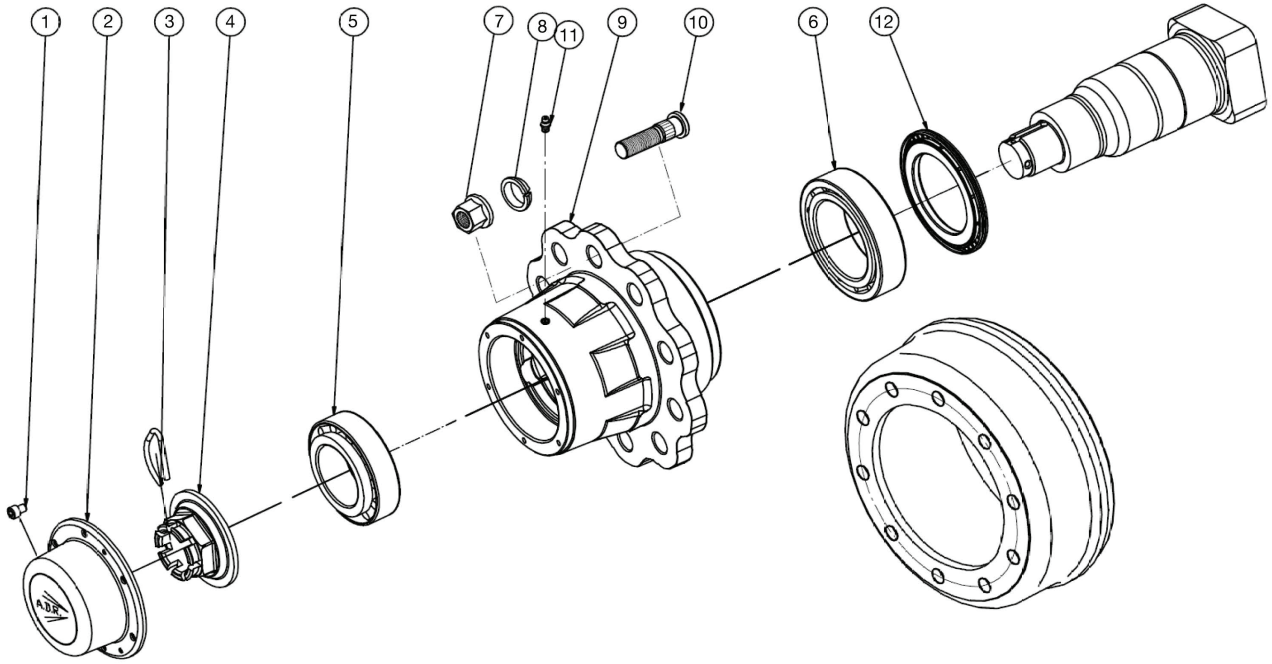

IF DESCRIPTION PREFIX IS ASSEMBLY DRAWING ONLY OR PRODUCTION DRAWING ONLY THE ITEM IS NOT FOR SALE			
ITEM	PART NUMBER	DESCRIPTION	QTY.
1	GA5052145	CAP KIT, 110 SERIES, ADR	1
2			
3	GA5024089	SPRING PIN, 100 SERIES, ADR	1
4	GA5024088	CROWN NUT, 100 SERIES, ADR	1
5	GA1700008	BEARING KIT, 100 SERIES UNBRAKED, 110 SERIES BRAKED, 33114, 33018, ADR	1
6			
7	GA5018892	WHEEL NUT AND WASHER, M22 X 1.5mm, QTY 1 EACH	10
	GA5052165	WHEEL NUT & WASHER KIT, M22 X 1.5mm, SUIT 90, 110 & 150 SERIES, 10 PACK	-
8	GA5018900	TAPERED SPRING WASHERS SUIT M22 WHEEL STUD (329F003)	10
9	GA5024087	WHEEL HUB, 1 STUD, 335mm PCD, 100 SERIES, ADR	1
10	GA5018837	WHEEL STUD, M22 X 1.5 X 85mm LONG, SUIT 110 SERIES HUB	10
11	GA5024086	GREASE NIPPLE, M8 STRAIGHT, 100 SERIES, ADR	1
12	GA5073565	GREASE SEAL, 110 SERIES, UNBRAKED AND BRAKED, ADR, 5441402, 140 OD X 92mm ID, 5441402, 9RNUA.	1
GA5018120 & 21 GOLDACRES		BRAKED STUB AXLE ASSEMBLY 110 SERIES ADR STUB AXLE 110 SERIES BRAKED	REV

Brake Mechanism Assembly, ADR, 110 Series

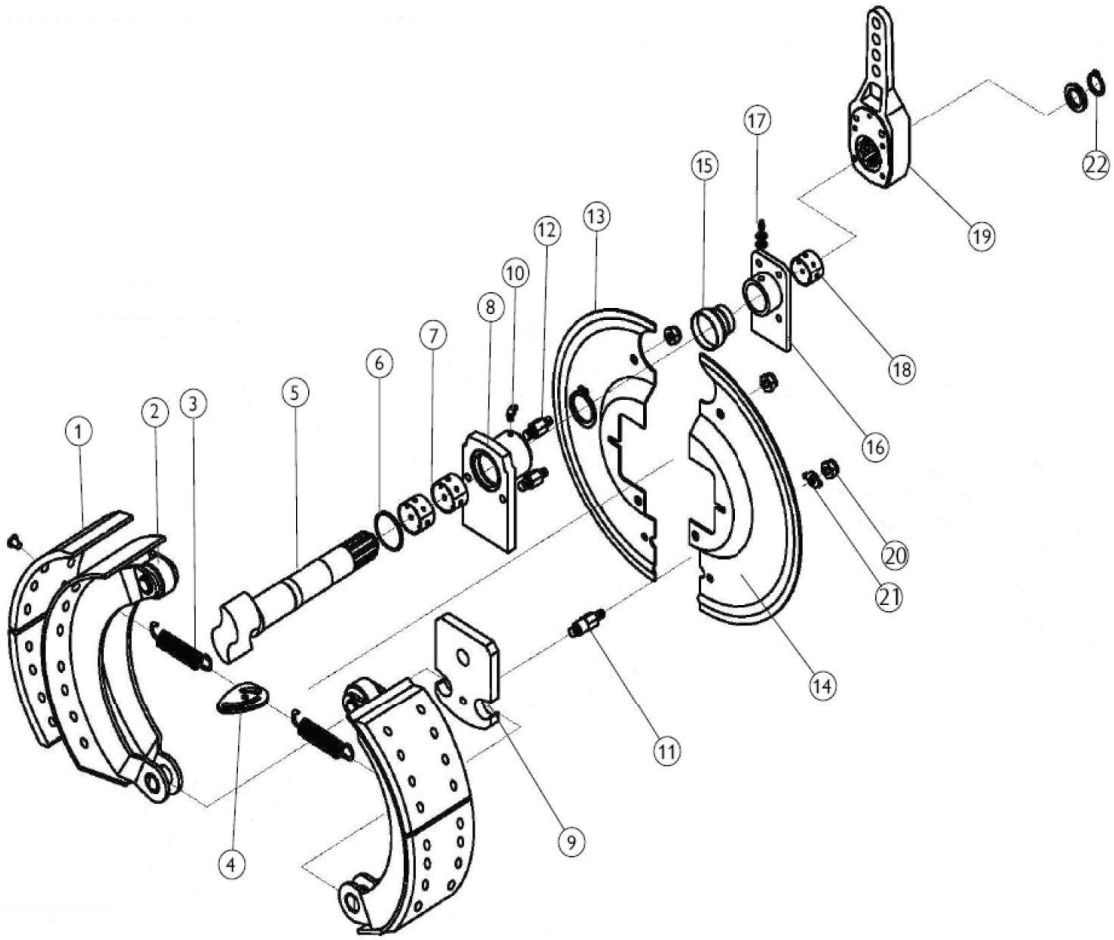

IF DESCRIPTION PREFIX IS ASSEMBLY DRAWING ONLY OR PRODUCTION DRAWING ONLY THE ITEM IS NOT FOR SALE			
ITEM	PART NUMBER	DESCRIPTION	QTY
1	GA5062505	BRAKE PADS,	2
2	GA5062510	BRAKE PADS RETAINER,	2
3	GA5062515	SPRING, BRAKE RETURN,	2
4	GA5062520	BRAKE, RETURN SPRING MOUNT, SUIT, 110 SERIES	1
5	GA5062525	S CAM, ADR, 110 SERIES	1
6	GA5062530	O-RING, ADR, 110 SERIES, BRAKED	
7	GA5062535	SPACERS, ADR, 110 SERIES, BRAKED	2
8	GA5062540	S CAM MOUNT, ADR, 110 SERIES, BRAKED	1
9	GA5062545	LOWER BRAKE SHOE MOUNT, ADR, 110 SERIES	1
10	GA5062560	GREASE NIPPLE, SUIT, ADR 110 SERIES, BRAKED HUB	1
11	GA5062555	SPACER STUD, LONG, SUIT, ADR 110 SERIES, BRAKED HUB	1
12	GA5062550	SPACER STUD, SHORT, SUIT, ADR 110 SERIES, BRAKED HUB	2
13	GA5062565	BACKING PLATE, LEFT, ADR 110 SERIES, BRAKED HUB	1
14	GA5062570	BACKING PLATE, RIGHT, ADR 110 SERIES, BRAKED HUB	1
15	GA5062610	RUBBER BOOT, ADR 110 SERIES, BRAKED HUB	1
16	GA5062575	BRAKE LEVER MOUNT, SUIT, ADR 110 SERIES	2
17	GA5062580	GREASE NIPPLE, LONG, ADR 110 SERIES	2
18	GA5062585	SPACER BUSH, SUIT, ADR 110 SERIES, BRAKED HUB	1
19	GA5062595	BRAKE LEVER, ADR 110 SERIES HUB	1
20	GA5062590	NUT M10X1.5, 97510B1	2
21	GA5062600	LEVER WASHER, ADR 110 SERIES, BRAKED HUB	1
22	GA5062605	LEVER CIRCLIP, SUIT, ADR 110, BRAKED HUB	1
-	GA5062615	BRAKE DRUM, SUIT, ADR 110 SERIES, 66LVA1001	1
GA7800062 GOLDACRES		BRAKE MECHANSIM ASSY, SUIT, ADR 110 SERIES, BRAKED HUB	REV 00

Brake Mechanism Assembly, ADR, 150 Series, Braked, LH

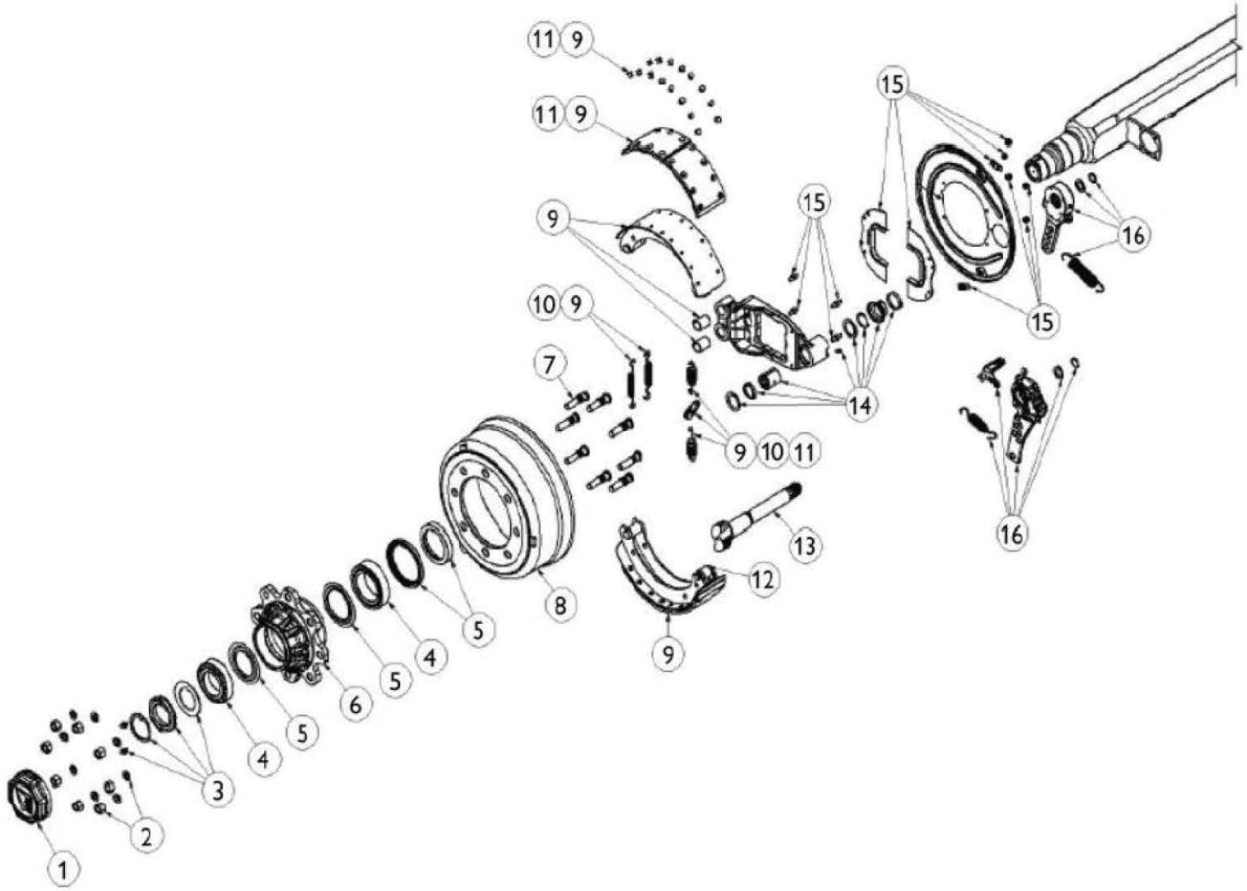

OPTIONAL PARTS			
ITEM	PART NUMBER	DESCRIPTION	QTY
-	GA5074320	WRENCH, ADR, HUB, DUST COVER,990802	-
-	GA5074325	LEVER, WRENCH, ADR, HUB, DUST COVER, 990804	-

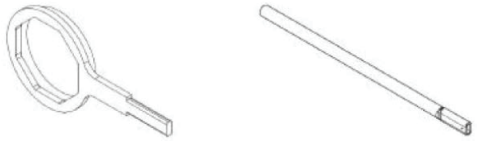

IF DESCRIPTION PREFIX IS ASSEMBLY DRAWING ONLY OR PRODUCTION DRAWING ONLY THE ITEM IS NOT FOR SALE			
ITEM	PART NUMBER	DESCRIPTION	QTY
1	GA5074240	DUST CAP, WITH O RING, 150 SERIES HUB, BRAKED, ADR, 9RT1T01	-
2	GA5018892	WHEEL NUT AND WASHER, M22 X 1.5mm, QTY 1 EACH	-
	GA5052165	WHEEL NUT & WASHER KIT, M22 X 1.5mm, SUIT 90, 110 & 150 SERIES, 10 PACK	
3	GA5074250	RING NUTS, LOCKING KIT, 150 SERIES HUB, BRAKED, ADR, 9RDF4T	-
4	GA5074255	BEARING KIT, 150 SERIES HUB, BRAKED, ADR, 9RC1T	-
5	GA5074260	SEAL KIT, 150 SERIES HUB, BRAKED, ADR, 9RN1T	-
6	GA5074265	HUB FACE, 150 SERIES BRAKED, ADR, 61L11V001	-
7	GA5074270	STUD KIT (PK10) 150 SERIES HUB, BRAKED, ADR, 9RC22L1-10	-
8	GA5074275	BRAKE DRUM, 150 SERIES BRAKED, ADR, 66LVA1006	-
9	GA5074280	BRAKE SHOE, KIT, 150 SERIES HUB, ADR, 9RE0092	-
10	GA5074285	SPRING KIT, 150 SERIES HUB, BRAKED, ADR, 9RK0016	-
11	GA5074290	BRAKE LINER KIT, 150 SERIES HUB, BRAKED, ADR, 9RH0034	-
12	GA5074295	BRAKE SHOE ROLLER KIT, 150 SERIES HUB, BRAKED, ADR, 9RE0084	-
13	GA5074300	CAM SHAFT, LH, 150 SERIES HUB, BRAKED, ADR, 75Q062005	-
14	GA5074305	CAM SHAFT BUSH KIT, 150 SERIES HUB, BRAKED, ADR, 9RL0026	-
15	GA5074310	REAR DUST COVER KIT, 150 SERIES HUB, BRAKED, ADR, 9RM044	-
16	GA5074315	SLACK ADJUSTER, 150 SERIES HUB, BRAKED, ADR, 7622601	-
GA7800079 GOLDACRES		ADR, 150 SERIES, BRAKED, LH, ASSEMBLY BREAKDOWN	REV 00

Brake Mechanism Assembly, ADR, 150 Series, Braked, RH

OPTIONAL PARTS			
ITEM	PART NUMBER	DESCRIPTION	QTY
-	GA5074320	WRENCH, ADR, HUB, DUST COVER,990802	-
-	GA5074325	LEVER, WRENCH, ADR, HUB, DUST COVER, 990804	-

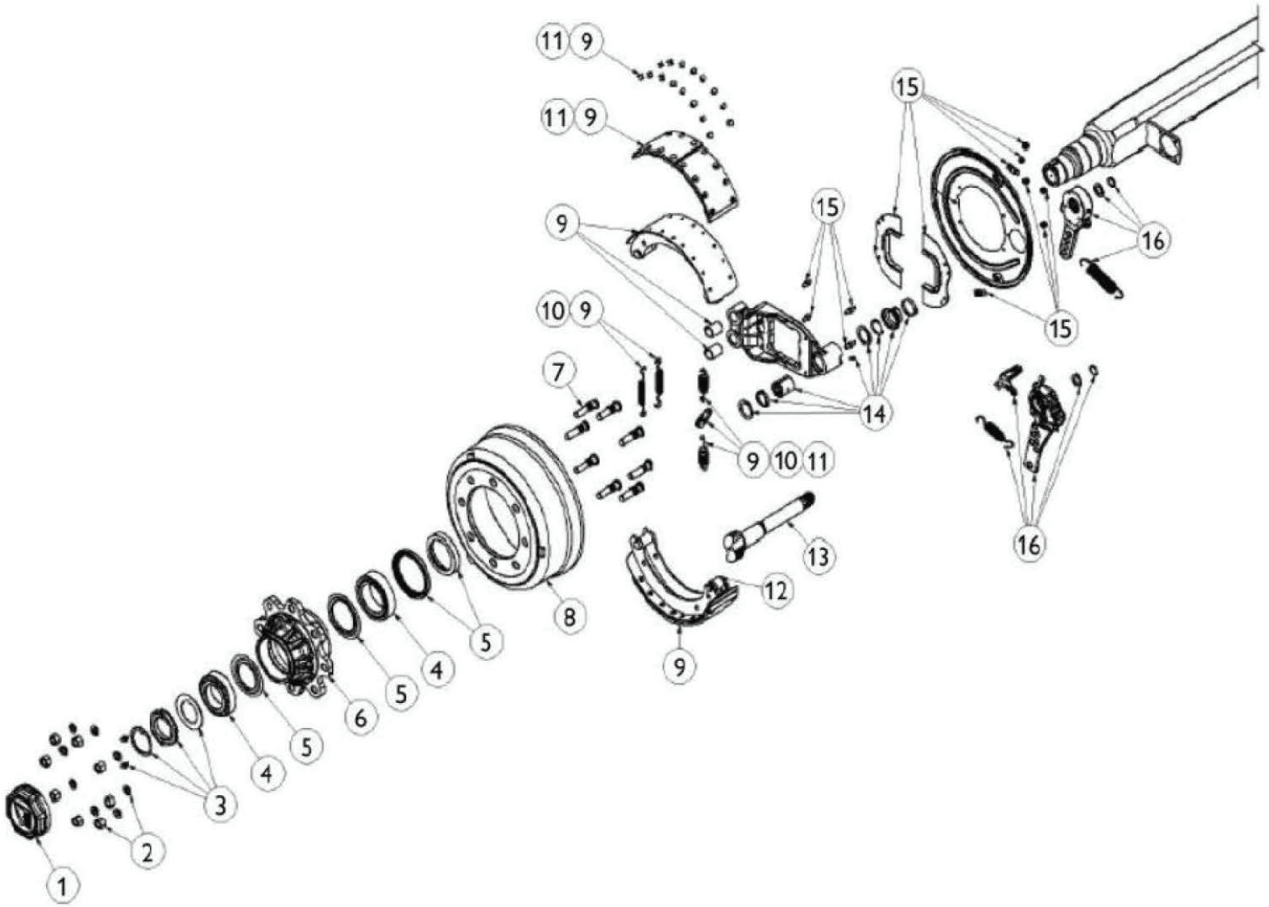

IF DESCRIPTION PREFIX IS ASSEMBLY DRAWING ONLY OR PRODUCTION DRAWING ONLY THE ITEM IS NOT FOR SALE			
ITEM	PART NUMBER	DESCRIPTION	QTY
1	GA5074240	DUST CAP, WITH O RING, 150 SERIES HUB, BRAKED, ADR, 9RT1T01	-
2	GA5018892	WHEEL NUT AND WASHER, M22 X 1.5mm, QTY 1 EACH	-
	GA5052165	WHEEL NUT & WASHER KIT, M22 X 1.5mm, SUIT 90, 110 & 150 SERIES, 10 PACK	`
3	GA5074250	RING NUTS, LOCKING KIT, 150 SERIES HUB, BRAKED, ADR, 9RDF4T	-
4	GA5074255	BEARING KIT, 150 SERIES HUB, BRAKED, ADR, 9RC1T	-
5	GA5074260	SEAL KIT, 150 SERIES HUB, BRAKED, ADR, 9RN1T	-
6	GA5074265	HUB FACE, 150 SERIES BRAKED, ADR, 61L11V001	-
7	GA5074270	STUD KIT (PK10) 150 SERIES HUB, BRAKED, ADR, 9RC22L1-10	-
8	GA5074275	BRAKE DRUM, 150 SERIES BRAKED, ADR, 66LVA1006	-
9	GA5074280	BRAKE SHOE, KIT, 150 SERIES HUB, ADR, 9RE0092	-
10	GA5074285	SPRING KIT, 150 SERIES HUB, BRAKED, ADR, 9RK0016	-
11	GA5074290	BRAKE LINER KIT, 150 SERIES HUB, BRAKED, ADR, 9RH0034	-
12	GA5074295	BRAKE SHOE ROLLER KIT, 150 SERIES HUB, BRAKED, ADR, 9RE0084	-
13	GA5074365	CAM SHAFT, RH, 150 SERIES HUB, BRAKED, ADR, 75P4062005	-
14	GA5074305	CAM SHAFT BUSH KIT, 150 SERIES HUB, BRAKED, ADR, 9RL0026	-
15	GA5074310	REAR DUST COVER KIT, 150 SERIES HUB, BRAKED, ADR, 9RM044	-
16	GA5074315	SLACK ADJUSTER, 150 SERIES HUB, BRAKED, ADR, 7622601	-
GA7800080 GOLDACRES		ADR, 150 SERIES, BRAKED, RH, ASSEMBLY BREAKDOWN	REV 00

Mudguard, 500mm

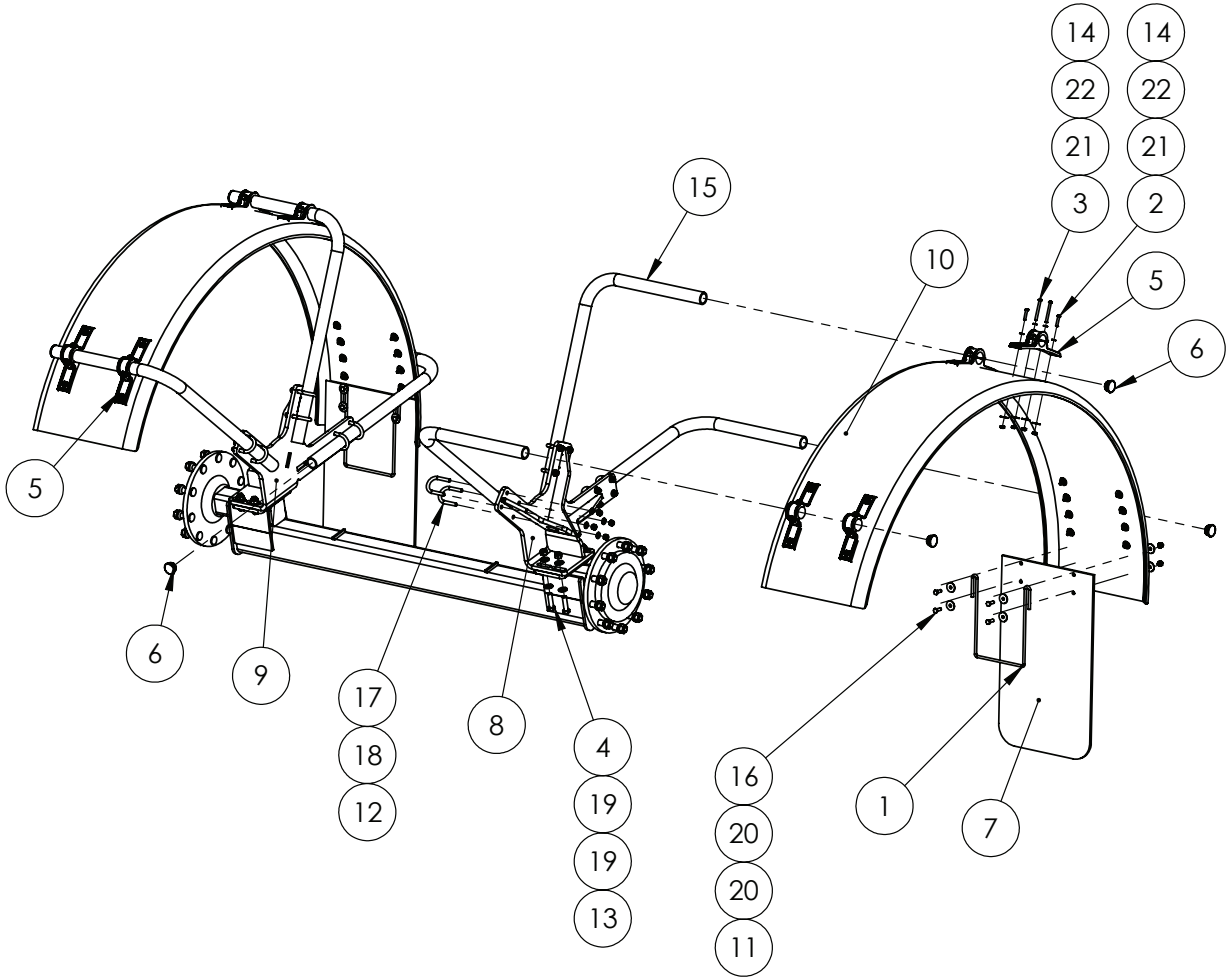

IF DESCRIPTION PREFIX IS ASSEMBLY DRAWING ONLY OR PRODUCTION DRAWING ONLY THE ITEM IS NOT FOR SALE			
ITEM	PART NUMBER	DESCRIPTION	QTY
1	GA5075070	ANTI SAIL MUDGUARD BRACKET	2
2	GA5079067	BHCS M8 X 40 SS A2-70	24
3	GA5079068	BHCS M8 X 80 SS A2-70	24
4	GA5000945	BOLT M16 X 60 GR8.8 SS A2-70	8
5	GA5078888	BRACKET, MUDGUARD MOUNT ASSEMBLY, SUIT 48.5mm PIPE	12
6	GA5003925	END CAP, 45 mm ROUND, BLACK PLASTIC	8
7	GA5051305	MUDFLAP, FLEXIBLE PLASTIC, 450 X 770, GOLDACRES BRANDING	2
8	GA4603210	MUDGUARD BRACKET, LH, ADJUSTABLE, PRIAIRE PRO, 2021	1
9	GA4603215	MUDGUARD BRACKET, RH, ADJUSTABLE, PRIAIRE PRO, 2021	1
10	GA5003825	MUDGUARD, BLACK PLASTIC, 500 WIDE X 1000 RADIUS	2
11	GA5011133	NUT M10 DOME NUT SS	8
12	GA5012461	NUT M12 NYLOC ZP	24
13	GA5001029	NUT M16 NYLOC ZP	8
14	GA5004917	NUT M8 NYLOC ZP	48
15	GA4703325	PIPE, 40H, 10000L, PRAIRIE PRO, 2021, MUDGUARD	6
16	GA5006145	SET SCREW M10 X 30 SS A2-70	8
17	GA5071209	U BOLT, ROUND TOP, M12 X 50 X 91, G/P	12
18	GA5000577	WASHER 12mm FLAT SS HD	24
19	GA5001043	WASHER 16mm FLAT SS HD	16
20	GA5002595	WASHER 3/8 X 1 1/2 X 14G	16
21	GA5003651	WASHER 8mm FLAT SS	48
22	GA5003645	WASHER FLAT SS 5-16 X 1 1-4	48
GA7800060 GOLDACRES		MUDGUARD ASSY, 500mm, PRAIRIE PRO, MY21	REV 02

Mudguard, 630mm

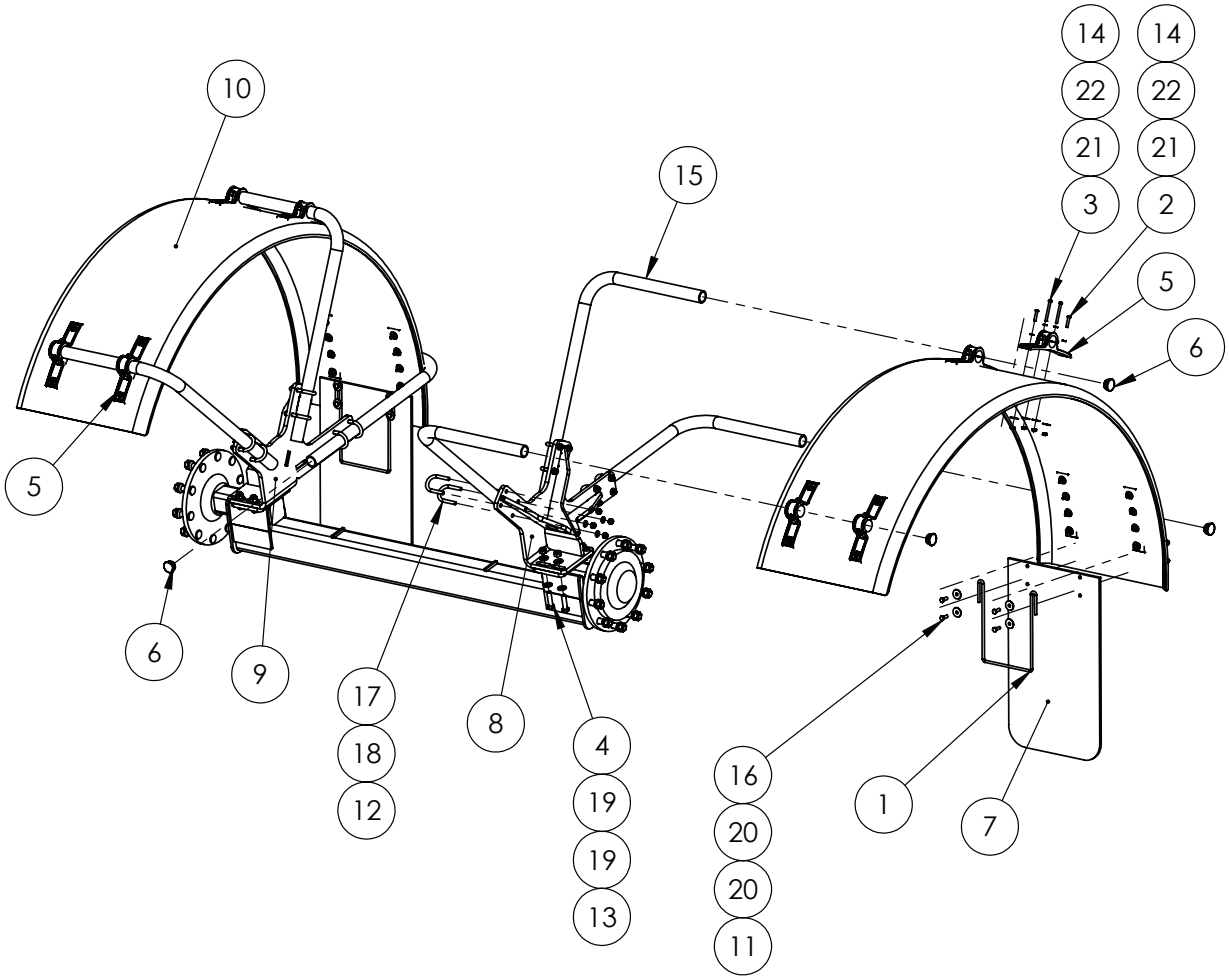

IF DESCRIPTION PREFIX IS ASSEMBLY DRAWING ONLY OR PRODUCTION DRAWING ONLY THE ITEM IS NOT FOR SALE			
ITEM	PART NUMBER	DESCRIPTION	QTY
1	GA5075070	ANTI SAIL MUDGUARD BRACKET	2
2	GA5079067	BHCS M8 X 40 SS A2-70	24
3	GA5079068	BHCS M8 X 80 SS A2-70	24
4	GA5000945	BOLT M16 X 60 GR8.8 SS A2-70	8
5	GA5078888	BRACKET, MUDGUARD MOUNT ASSEMBLY, SUIT 48.5mm PIPE	12
6	GA5003925	END CAP, 45 mm ROUND, BLACK PLASTIC	8
7	GA5051305	MUDFLAP, FLEXIBLE PLASTIC, 450 X 770, GOLDACRES BRANDING	2
8	GA4603210	MUDGUARD BRACKET, LH, ADJUSTABLE, PRIAIRE PRO, 2021	1
9	GA4603215	MUDGUARD BRACKET, RH, ADJUSTABLE, PRIAIRE PRO, 2021	1
10	GA5004263	MUDGUARD, BLACK PLASTIC, 630 WIDE X 1000 RADIUS	2
11	GA5011133	NUT M10 DOME NUT SS	8
12	GA5012461	NUT M12 NYLOC ZP	24
13	GA5001029	NUT M16 NYLOC ZP	8
14	GA5004917	NUT M8 NYLOC ZP	48
15	GA4703325	PIPE, 40H, 10000L, PRAIRIE PRO, 2021, MUDGUARD	6
16	GA5006145	SET SCREW M10 X 30 SS A2-70	8
17	GA5071209	U BOLT, ROUND TOP, M12 X 50 X 91, G/P	12
18	GA5000577	WASHER 12mm FLAT SS HD	24
19	GA5001043	WASHER 16mm FLAT SS HD	16
20	GA5002595	WASHER 3/8 X 1 1/2 X 14G	16
21	GA5003651	WASHER 8mm FLAT SS	48
22	GA5003645	WASHER FLAT SS 5-16 X 1 1-4	48
GA7800060 GOLDACRES		MUDGUARD ASSY, 630mm, PRAIRIE PRO, MY21	REV 02

Mudguard, 800mm

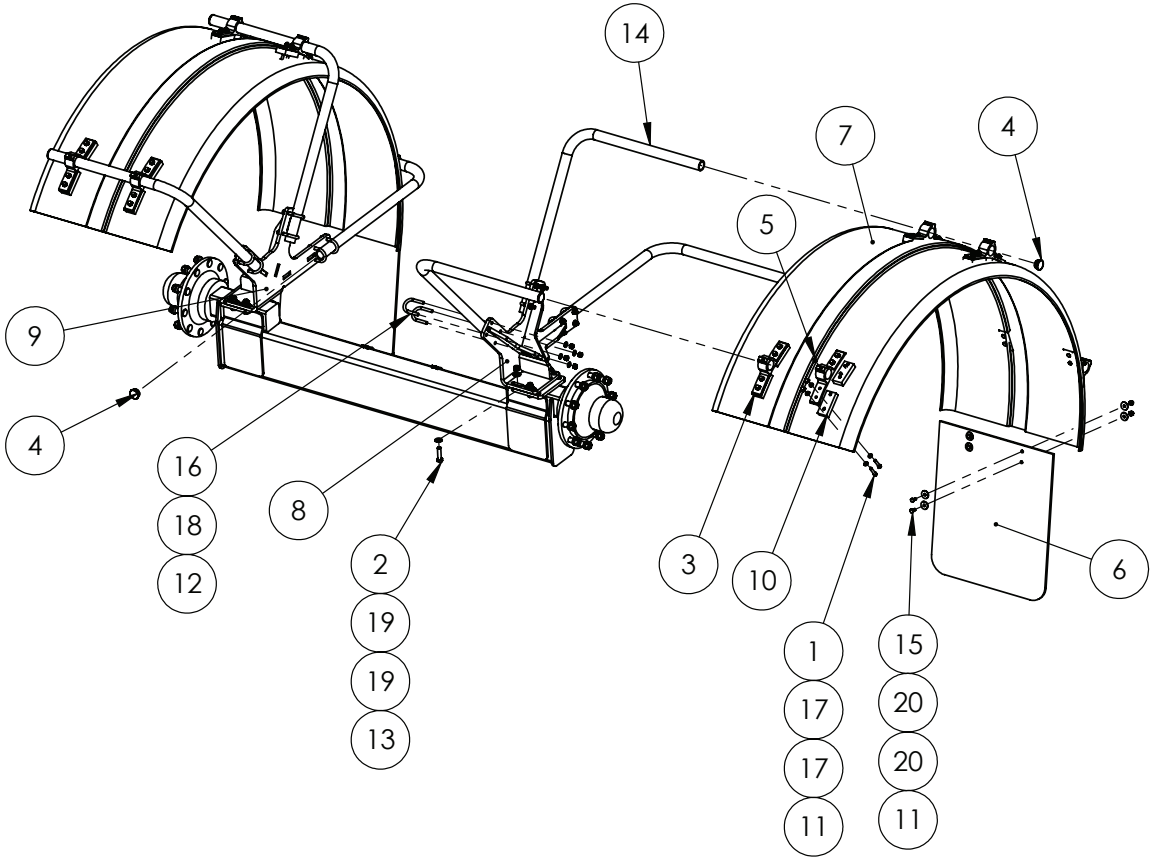

IF DESCRIPTION PREFIX IS ASSEMBLY DRAWING ONLY OR PRODUCTION DRAWING ONLY THE ITEM IS NOT FOR SALE			
ITEM	PART NUMBER	DESCRIPTION	QTY
1	GA5011173	BOLT M10 X 55 GR8.8 ZP	48
2	GA5000941	BOLT M16 X 60 GR8.8 ZP	8
3	GA5020450	BRACKET, PLASTIC, BLACK, MUDGUARD MOUNTING, BK-P300BK1	12
4	GA5003925	END CAP, 45 mm ROUND, BLACK PLASTIC	8
5	GA5050675	GRUB SCREW M12 X 16 SS	12
6	GA5018329	MUDFLAP, FLEXIBLE PLASTIC, 650mm X 750mm GOLDACRES BRANDING	2
7	GA5004841	MUDGUARD 800W X R1060	2
8	GA4603210	MUDGUARD BRACKET, LH, ADJUSTABLE, PRIAIRE PRO, 2021	1
9	GA4603215	MUDGUARD BRACKET, RH, ADJUSTABLE, PRIAIRE PRO, 2021	1
10	GA5060775	MUDGUARD SPACER 117X53X25 HPE BLACK	24
11	GA5011133	NUT M10 DOME NUT SS	56
12	GA5012461	NUT M12 NYLOC ZP	24
13	GA5001029	NUT M16 NYLOC ZP	8
14	GA4702935	PIPE, 40H, 10000L, PRAIRIE PRO, 2021, MUDGUARD	6
15	GA5066162	SET SCREW M10 X 25 SS A2-70	8
16	GA5071209	U BOLT M12 X 91L X 50W RT G/P	12
17	GA5000117	WASHER 10mm FLAT SS HD	96
18	GA5000577	WASHER 12mm FLAT SS HD	24
19	GA5001043	WASHER 16mm FLAT SS HD	16
20	GA5002595	WASHER 3/8 X 1 1/2 X 14G	16
GA7800061 GOLDACRES	MUDGUARD ASSY, 800mm, PRAIRIE PRO, MY21		REV 02.A

14 - Induction Hopper

Induction Hopper, Mounting Assembly

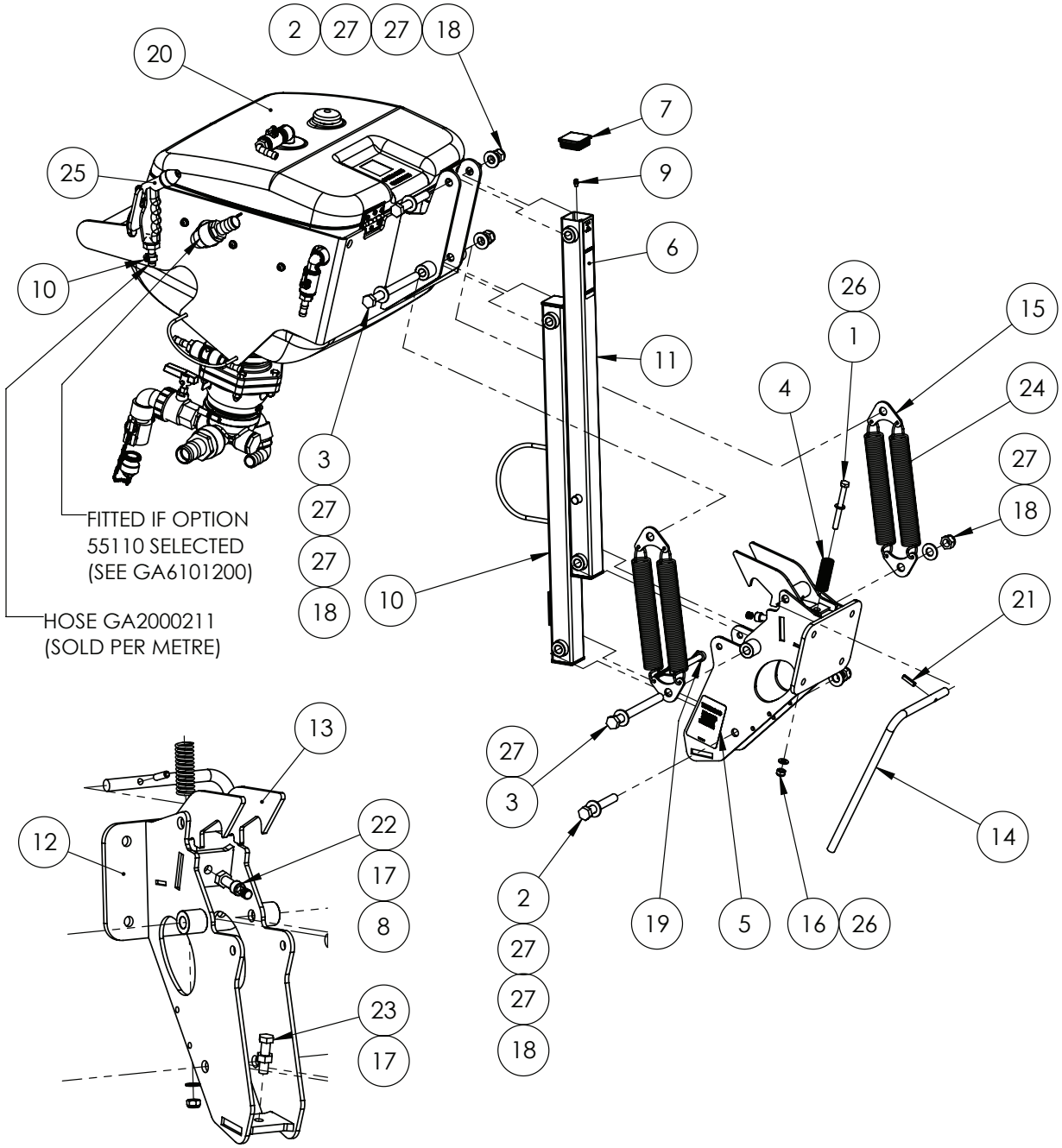

SUB-ASSEMBLIES ON FOLLOWING PAGES

IF DESCRIPTION PREFIX IS ASSEMBLY DRAWING ONLY OR PRODUCTION DRAWING ONLY THE ITEM IS NOT FOR SALE

ITEM	PART NUMBER	DESCRIPTION	QTY
1	GA5006091	BOLT M10 X 100 GR8.8 ZP	1
2	GA5000855	BOLT M16 X 110 GR8.8 ZP	2
3	GA5000879	BOLT M16 X 180 GR8.8 ZP	2
4	GA5007329	COMPRESSION SPRING GOLD	1
5	GA8701615	DECAL, INDUCTION HOPPER WARNING, CATCH RELEASE, TRAILER	1
6	GA8701201	DECAL, WARNING CAUTION INDUCTION HOPPER	1
7	GA5003783	END CAP, PLASTIC, BLACK, INSERT, RHS. 50 X 50, 0.8 - 2.5mm WALL	4
8	GA5052905	END CAP, PLASTIC, BLACK, INSERT, ROUND. 10mm, 0.8 - 1.5mm WALL	1
9	GA5012203	GREASE NIPPLE, SHORT, 1/4 UNF, MACH0207	4
10	GA4653445	INDUC HOP ARM LWR ADV	1
11	GA4653440	INDUC HOP ARM UPR ADV	1
12	GA4653420	INDUC HOP CHASSIS MNT ADV	1
13	GA4653490	INDUC HOP LATCH ADV	1
14	GA4699435	LATCH HANDLE SP HOPPER 2011	1
15	GA4522294	MOUNTING PLATE, DOUBLE INDUCTION HOPPER SPRING	4
16	GA5000141	NUT M10 NYLOC ZP	1
17	GA5000559	NUT M12 HEX ZP	2
18	GA5001029	NUT M16 NYLOC ZP	4
19	GA5048380	PIN SHAFT LOCKING 11mm	1
20	GA6101200	PRODUCTION DRAWING ONLY, HOPPER, TANK, PRAIRIE PRO, LF SPECIAL, S2	1
21	GA5075130	ROLL PIN M8 X 30mm COATED	1
22	GA5000321	SHCS M12 X 40 GR12.9 ZP	1
23	GA5000327	SET SCREW M12 X 45 GR8.8 ZP	1
24	GA5007073	SPRING, TENSION, 38.2 OD X 284.3 LONG X 3.55mm, INDUCTION HOPPER	4
25	GA4950925	WASH GUN ASSEMBLY, G6 MY20	1
26	GA5000117	WASHER 10mm FLAT SS HD	2
27	GA5001043	WASHER 16mm FLAT SS HD	8
GA6101190 GOLDACRES		HOPPER ASSEMBLY, CONFIGURABLE, PRAIRIE PRO, LF SPECIAL, S2	REV 01.B

Induction Hopper, Drum Rinse & Support Bracket

FIT ITEMS (6), (7) & (15) IF 55110 OR 50070 OPTIONED

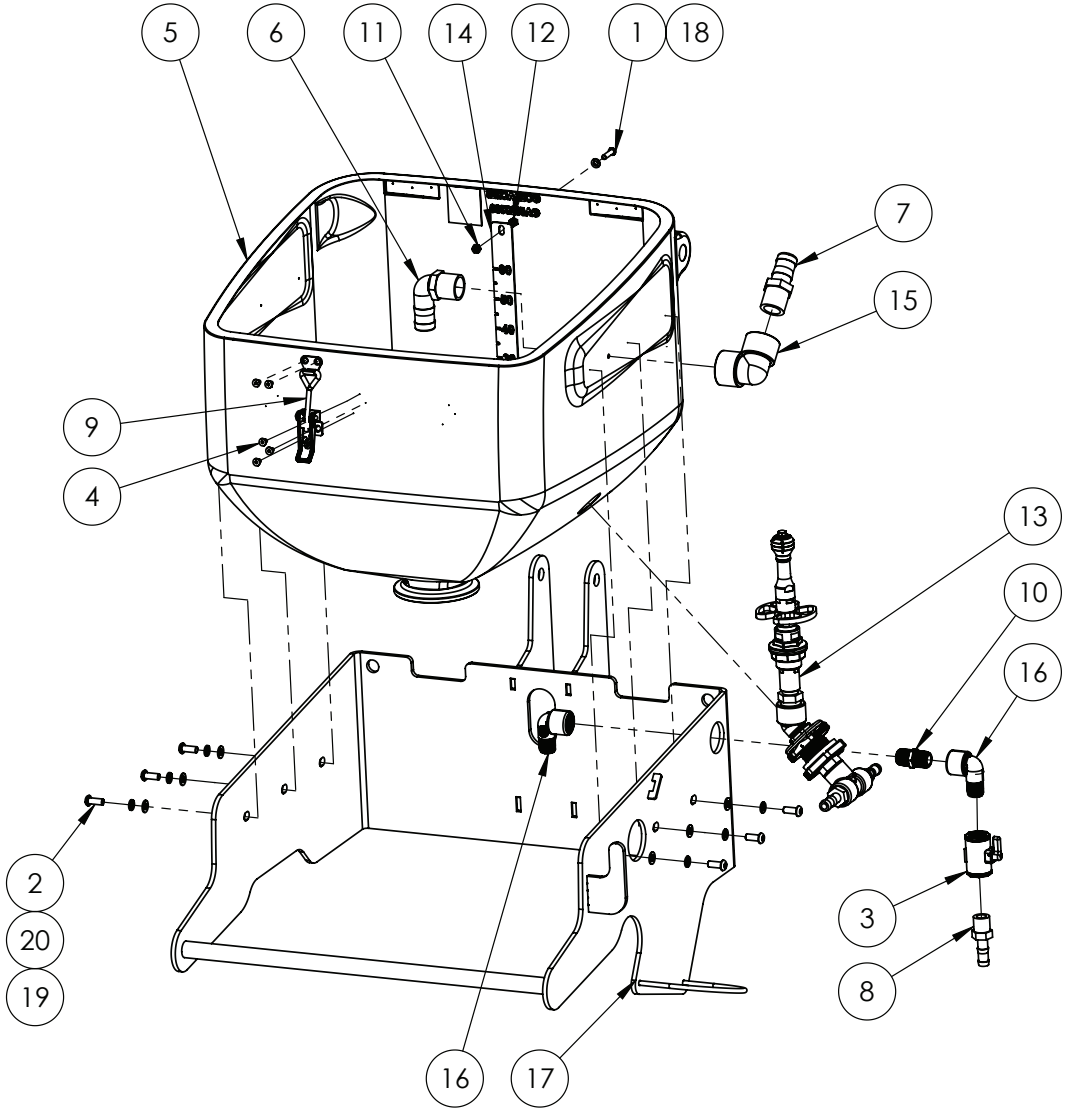

IF DESCRIPTION PREFIX IS ASSEMBLY DRAWING ONLY OR PRODUCTION DRAWING ONLY THE ITEM IS NOT FOR SALE			
ITEM	PART NUMBER	DESCRIPTION	QTY
1	GA5004067	BHCS M6 X 25 SS A2-70	1
2	GA0500102	BHCS M8 X 20 SS A2-70	6
3	GA2000163	BALL VALVE, MICRO, 2 WAY, 1/2" NPT FEMALE THREADS, LV050V, BANJO	1
4	GA0500101	CSCS M5 X 10 SS A2-70	5
5	GA5025130	HOPPER, BODY, G6, MY20	1
6	GA5077723	HOSE BARB, ELBOW, 90 DEGREE, 1" MALE X 1" HOSE, BANJO	1
7	GA5077718	HOSE BARB, STRAIGHT, 1 MALE THREAD X 1 HOSE, BANJO	1
8	GA5077702	HOSE BARB, STRAIGHT, 1/2 MALE THREAD X 1/2 HOSE, BANJO, HB050	1
9	GA5007071	LATCH, INDUCTION HOPPER LID, STAINLESS STEEL	1
10	GA5077911	NIPPLE, SHORT, 1/2 MALE THREAD X 1/2 MALE THREAD, BANJO. NIP050-SH	1
11	GA5004429	NUT M6 NYLOC SS	1
12	GA5049030	NUT M6 SS	1
13	GA4949305	PRODUCTION DRAWING ONLY. DRUM RINSE NOZZLE, HOPPER, G6 MY20	1
14	GA4408895	SCALE, HOPPER, 60L SERIES 2	1
15	GA5077655	STREET ELBOW, 90 DEGREE, 1 FEMALE THREAD X 1 FEMALE THREAD, BANJO, EL100-90	1
16	GA5078133	STREET ELBOW, 90 DEGREE, 1/2 FEMALE THREAD X 1/2 MALE THREAD, BANJO	2
17	GA4603195	SUPPORT, HOPPER, PRAIRIE PRO, 2021	1
18	GA5004437	WASHER 6mm FLAT SS	1
19	GA5003643	WASHER 8mm FLAT SS HD	6
20	GA5004919	WASHER 8mm SPRING SS	6
GA6101200 GOLDACRES	PRODUCTION DRAWING ONLY, HOPPER, TANK, PRAIRIE PRO, LF SPECIAL, S2		REV 01.B

Induction Hopper, Lid & Tank Rinse

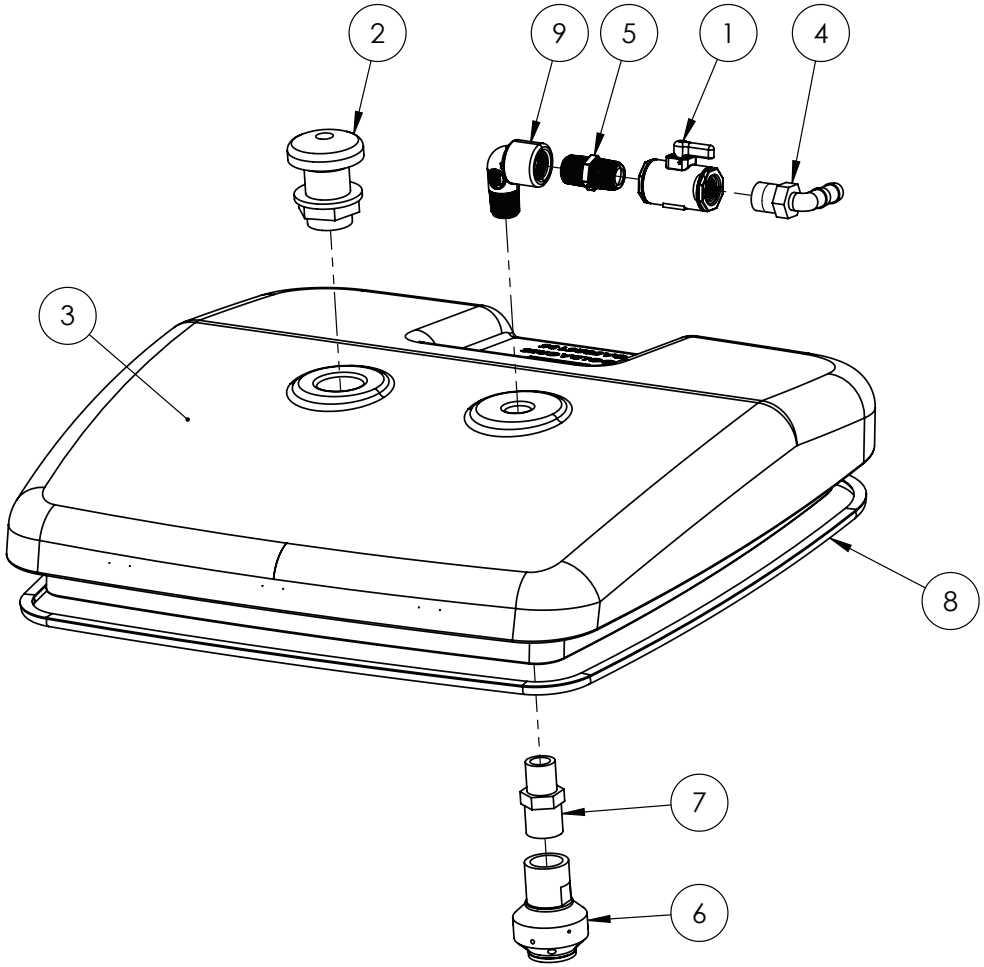

IF DESCRIPTION PREFIX IS ASSEMBLY DRAWING ONLY OR PRODUCTION DRAWING ONLY THE ITEM IS NOT FOR SALE			
ITEM	PART NUMBER	DESCRIPTION	QTY
1	GA2000163	BALL VALVE, MICRO, 2 WAY, 1/2" NPT FEMALE THREADS, LV050V, BANJO	1
2	GA5077045	BREATHER VALVE, LABYRINTH TYPE, 1" MALE THREAD, ARAG	1
3	GA5025135	HOPPER, LID,G6, MY20	1
4	GA5077708	HOSE BARB, ELBOW, 90 DEGREE, 1/2 MALE THREAD X 1/2 HOSE, BANJO, HB050-90	1
5	GA5077911	NIPPLE, SHORT, 1/2 MALE THREAD X 1/2 MALE THREAD, BANJO. NIP050-SH	1
6	GA5077336	NOZZLE, TANK RINSING, 3/4 BSPT FEMALE INLET, TEEJET	1
7	GA5078087	REDUCING NIPPLE, 3/4 MALE THREAD X 1/2 MALE THREAD, BANJO	1
8	GA5078553	SEAL, BULB, SELF ADHESIVE, 8.3mm X 9mm, CLARK RUBBER, SKU: 38954	1.8
9	GA5078133	STREET ELBOW, 90 DEGREE, 1/2 FEMALE THREAD X 1/2 MALE THREAD, BANJO	1
GA6101200 GOLDACRES		PRODUCTION DRAWING ONLY, HOPPER, TANK, PRAIRIE PRO, LF SPECIAL, S2	REV 01.B

Induction Hopper, Lid Hinges & Hopper Bottom Assembly

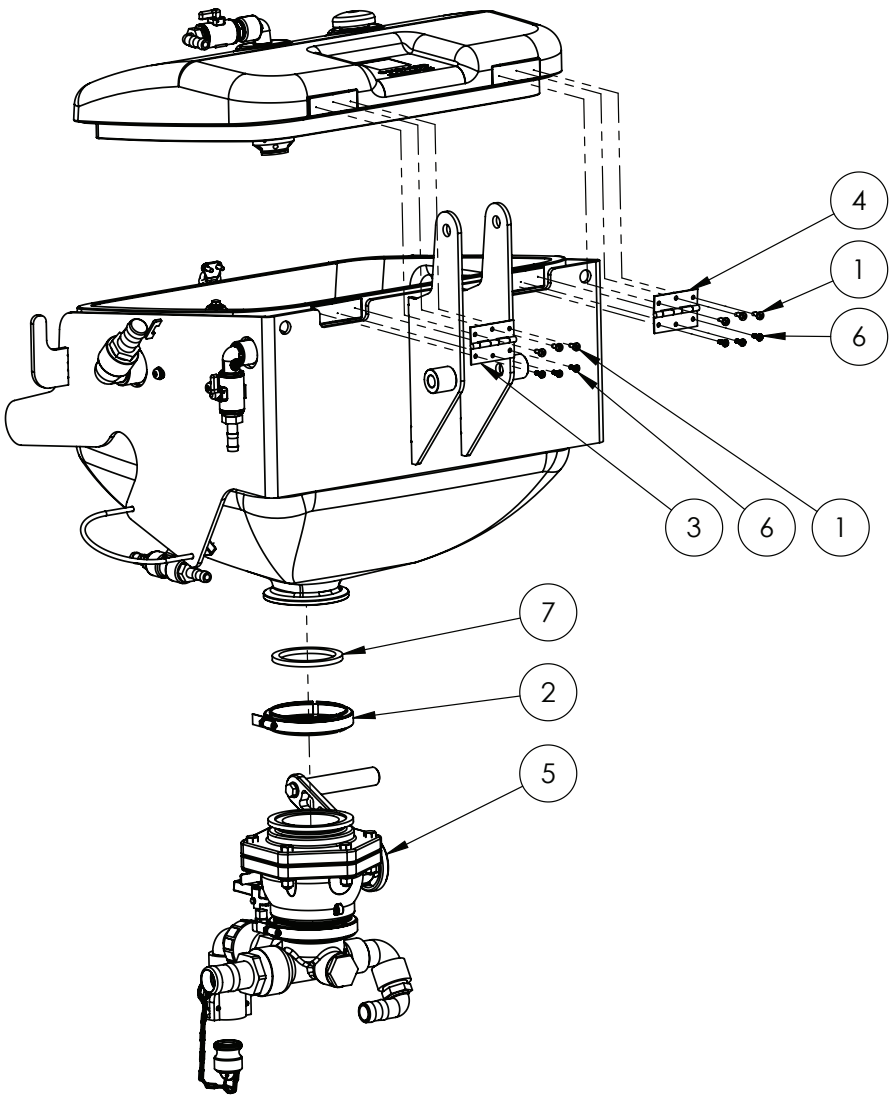

IF DESCRIPTION PREFIX IS ASSEMBLY DRAWING ONLY OR PRODUCTION DRAWING ONLY THE ITEM IS NOT FOR SALE			
ITEM	PART NUMBER	DESCRIPTION	QTY
1	GA0500099	BOLT PAN HEAD M5	6
2	FC300	CLAMP, 3" FLANGE MANIFOLD, BANJO	1
3	GA5006661	HINGE 76mm BUTT HINGE SS	1
4	GA5006661	HINGE 76mm BUTT HINGE SS	1
5	GA4949285	PRODUCTION DRAWING ONLY. HOPPER BOTTOM, ASSEMBLY, G6, MY20	1
6	GA5014817	SCREW PAN HEAD 10G X 5/8 SS	6
7	GA5076723	SEAL, EPDM, SUIT 3 FLANGE FITTING, BANJO	1
GA6101200 GOLDACRES		PRODUCTION DRAWING ONLY, HOPPER, TANK, PRAIRIE PRO, LF SPECIAL, S2	REV 01.B

Drum Rinse Assembly

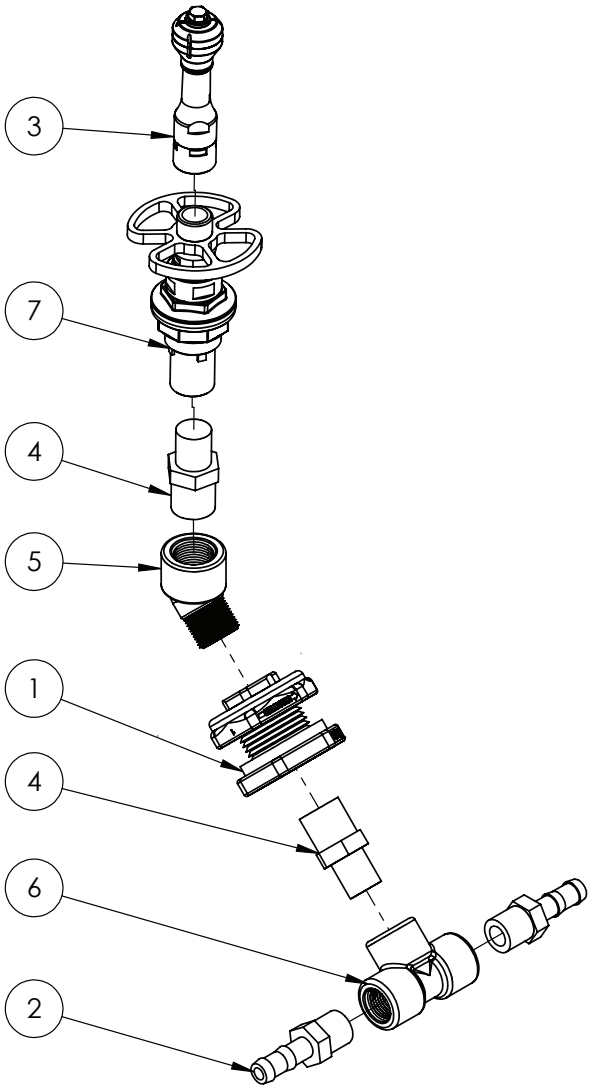

IF DESCRIPTION PREFIX IS ASSEMBLY DRAWING ONLY OR PRODUCTION DRAWING ONLY THE ITEM IS NOT FOR SALE			
ITEM	PART NUMBER	DESCRIPTION	QTY
1	GA2000162	BULKHEAD FITTING, 3/4" FEMAL THREADS, TF075, BANGO	1
2	GA5077702	HOSE BARB, STRAIGHT, 1/2 MALE THREAD X 1/2 HOSE, BANJO, HB050	2
3	GA5077063	NOZZLE, DRUM & CONTAINER ROTATING RINSING JET, ARAG, 510111	1
4	GA5078087	REDUCING NIPPLE 3/4" X 1/2"	2
5	GA5078134	STREET ELBOW, 45 DEGREE, 3/4 MALE THREAD X 3/4 FEMALE THREAD, BANJO	1
6	GA5078149	TEE, THREADED, 1/2 FEMALE, BANJO	1
7	GA5077062	VALVE, DRUM & CONTAINER RINSING NOZZLE, ARAG, 510101	1
GA4949305 GOLDACRES		PRODUCTION DRAWING ONLY. DRUM RINSE NOZZLE, HOPPER, G6 MY20	REV 00

Hopper Bottom, Plumbing Assembly

REPLACEMENT PARTS			
ITEM	PART NUMBER	DESCRIPTION	QTY
A	GA2000301	REPAIR KIT, BALL VALVE 3", SUIT GA2000119, BANJO, VS35200	-

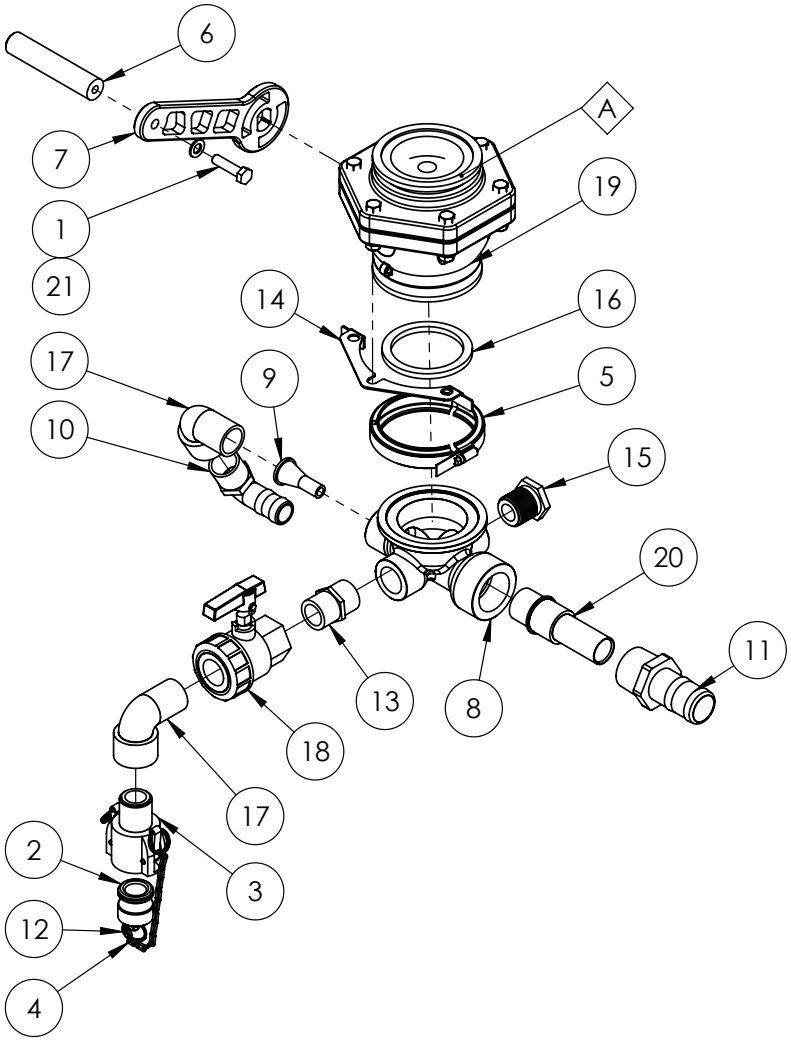

IF DESCRIPTION PREFIX IS ASSEMBLY DRAWING ONLY OR PRODUCTION DRAWING ONLY THE ITEM IS NOT FOR SALE			
ITEM	PART NUMBER	DESCRIPTION	QTY
1	GA5006079	BOLT M10 X 40 SS A2-70	1
2	GA5076005	CAM LEVER, MALE PLUG, SUITS 1 & 1 1/4 COUPLINGS, BANJO	1
3	GA5076007	CAM LEVER, 1 FEMALE COUPLER, 1 MALE THREAD, BANJO	1
4	GA5001491	CHAIN 2 X 20 mm SS 316, 146102, CUT 150mm	0.15
5	FC300	CLAMP, 3" FLANGE MANIFOLD, BANJO	1
6	GA4551515	FOOT ACTIVATED HANDLE, HOPPER, G6 MY20	1
7	GA4406215	HANDLE, 3" BALL VALVE, HOPPER BOTTOM, G6 MY20	1
8	GA5078605	HOPPER BOTTOM, MOULDED	1
9	L057A	HOPPER JET TAPERED 9mm	1
10	GA5077723	HOSE BARB 90 DEGREE 1" BANJO	1
11	GA5077731	HOSE BARB, STRAIGHT, 1 1/2 MALE THREAD X 1 1/2 HOSE, BANJO	1
12	GA5002077	KEY RING, 25mm, SS	1
13	GA5077914	NIPPLE, SHORT, 1" MALE THREAD X 1" MALE THREAD, BANJO	1
14	GA4412695	PLATE, VALVE STOP, 3", STUBBY, BANJO, MVS300CFFP, HOPPER	1
15	GA5077945	PLUG, 1 MALE THREAD, BANJO	1
16	GA5076723	SEAL, EPDM, SUIT 3 FLANGE FITTING, BANJO	1
17	GA5078137	STREET ELBOW, 90 DEGREE, 1 MALE X 1 FEMALE, BANJO	2
18	GA5078164	VALVE, BALL, 1 FEMALE THREAD INLET / OUTLET, FULL PORT, LEVER HANDLE, BANJO	1
19	GA4912900	VALVE, BALL, 3", BANJO, MVS300CFFP, DRILLED, SUIT HOPPER BOTTOM	1
20	GA4551895	VENTURI, HOPPER BOTTOM, DIA. 20mm	1
21	GA5000117	WASHER 10mm FLAT SS HD	1
GA4949285 GOLDACRES		PRODUCTION DRAWING ONLY. HOPPER BOTTOM, ASSEMBLY, G6, MY20	REV 05.B

Wash Down Gun

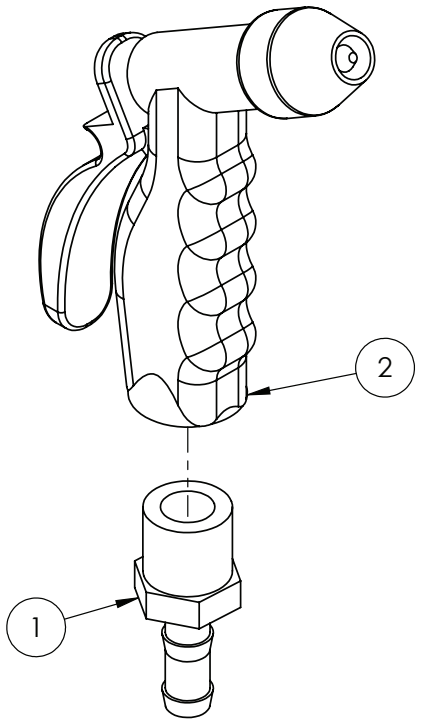

IF DESCRIPTION PREFIX IS ASSEMBLY DRAWING ONLY OR PRODUCTION DRAWING ONLY THE ITEM IS NOT FOR SALE			
ITEM	PART NUMBER	DESCRIPTION	QTY
1	GA5077713	HOSE BARB, STRAIGHT, 3/4 MALE THREAD X 1/2 HOSE, BANJO	1
2	GA5051390	WASH DOWN GUN WATER SPRAY	1
GA4950925 GOLDACRES		WASH GUN ASSEMBLY, G6 MY20	REV 00

15 - Height Control

XRT, Rotary Sensor & Tilt Sensors

REPLACEMENT PARTS			
ITEM	PART NUMBER	DESCRIPTION	QTY
A	GA3000381	ROTARY SENSOR, TILTS, XRT, SENSOR AND MAGNET, RTP050HVNAA, NO GRUB SCREWS, 50 DEGREE	-

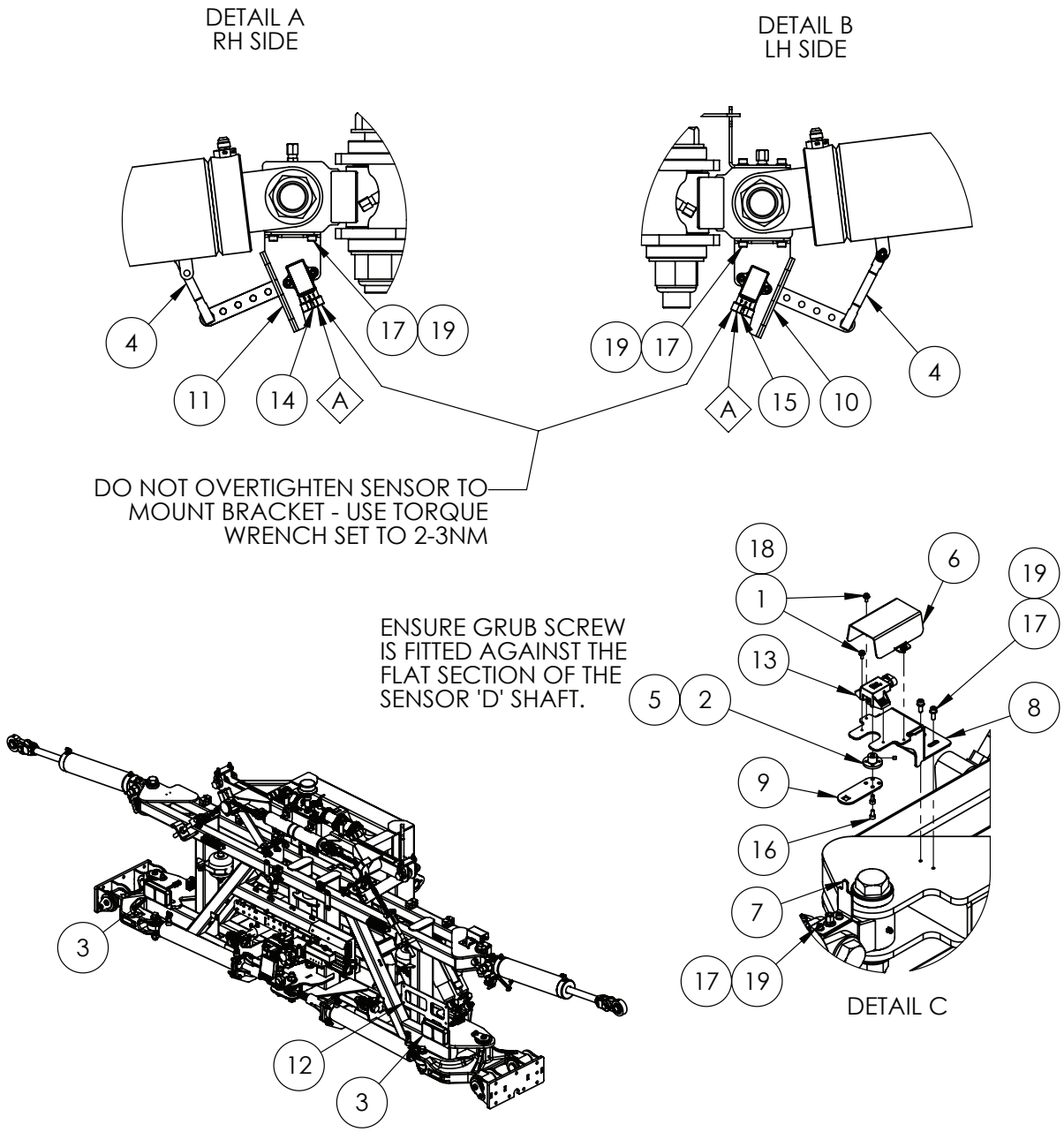

IF DESCRIPTION PREFIX IS ASSEMBLY DRAWING ONLY OR PRODUCTION DRAWING ONLY THE ITEM IS NOT FOR SALE			
ITEM	PART NUMBER	DESCRIPTION	QTY
1	GA5011360	BOLT PAN HEAD M4 X 10 SS	4
2	GA4552855	BUSH, TILT SENSOR SWITCH, SP 2011	1
3	GA3000249	LED TAIL LIGHT, LARGE WITH CONNECTOR	2
4	GA4551275	LINK ROD, RIDE HEIGHT, G6, MY20	2
5	GA5069970	M5 GRUB SCREW X 5mm LONG S/S	1
6	GA4408175	PLATE, FOLD SENSOR, COVER, TRITECH, MY20	1
7	GA4408375	PLATE, FOLD SENSOR, KNUCKLE MOUNT, TRITECH, MY20	1
8	GA4408170	PLATE, FOLD SENSOR, MOUNT BRACKET. TRITECH, MY20	1
9	GA4408370	PLATE, FOLD SENSOR, SENSOR ARM, TRITECH, MY20	1
10	GA4408395	PLATE, TILT SENSOR, KNUCKLE SENSOR MOUNT RH, TRITECH, MY20	1
11	GA4408380	PLATE, TILT SENSOR, KNUCKLE SENSOR MOUNT LH, TRITECH, MY20	1
12	GA4504300	PLATE, NUMBER PLATE MOUNT, BOLT ON, SUIT TAIL LIGHT, SP 2011 ON	1
13	GA5069457	POTENTIOMETER, 120 DEGREE, ELOBAU, GATMC	1
14	GA3000378	ROTARY SENSOR KIT, WITH LOOSE HARDWARE, RTP, 50 DEGREE, RAVEN XRT, 11170235009	1
15	GA3000378	ROTARY SENSOR KIT, WITH LOOSE HARDWARE, RTP, 50 DEGREE, RAVEN XRT, 11170235009	1
16	GA5069975	SHCS M5 X 10 SS A2-70	2
17	GA5004049	SHCS M6 X 16 GR12.9 ZP	8
18	GA5020510	WASHER 4mm FLAT SS	4
19	GA5004437	WASHER 6mm FLAT SS	8
GA6101110-12 GOLDACRES		CENTRE AND PARALIFT REAR ASSEMBLY, 36M BOOM, PRAIRIE PRO, MY22	REV 02.C

Raven XRT Node & Rotary Angle Sensor

REPLACEMENT PARTS			
ITEM	PART NUMBER	DESCRIPTION	QTY
A	GA3000381	ROTARY SENSOR, TILTS, XRT, SENSOR AND MAGNET, RTP050HVNAA, NO GRUB SCREWS, 50 DEGREE	-

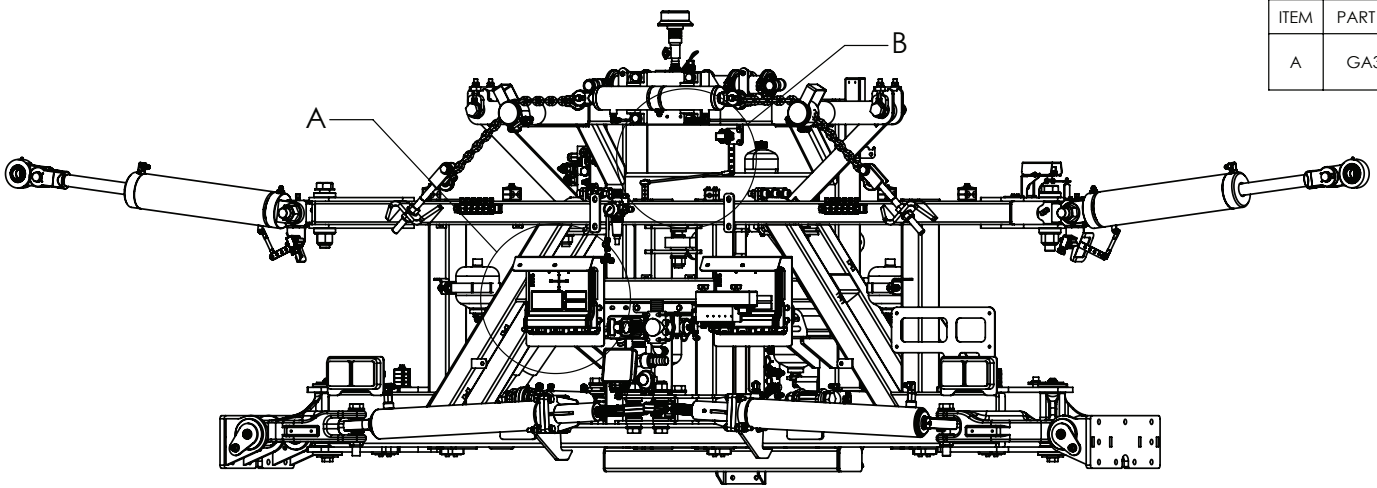

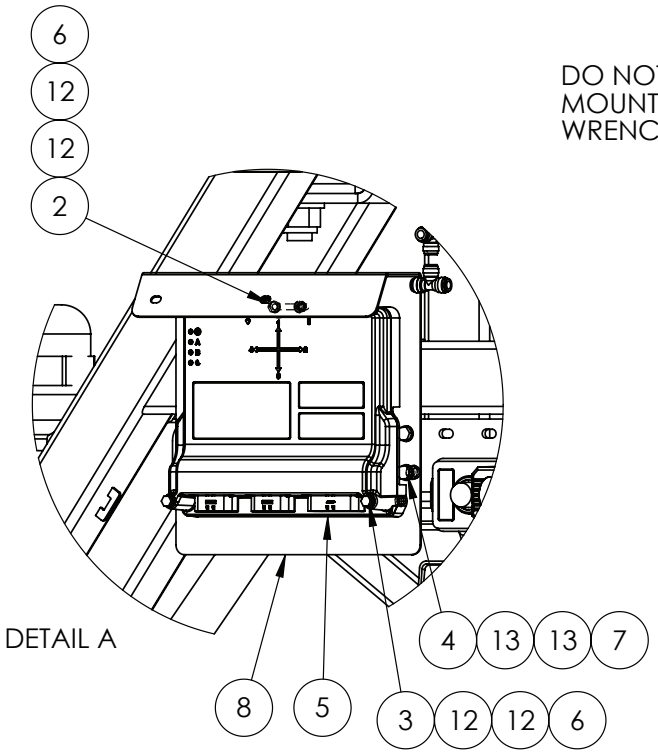

DETAIL A

DO NOT OVERTIGHTEN SENSOR TO MOUNT BRACKET - USE TORQUE WRENCH SET TO 2-3NM

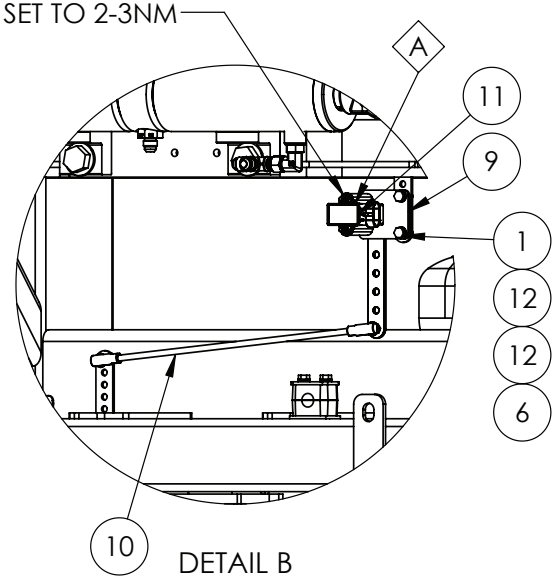

DETAIL B

IF DESCRIPTION PREFIX IS ASSEMBLY DRAWING ONLY OR PRODUCTION DRAWING ONLY THE ITEM IS NOT FOR SALE			
ITEM	PART NUMBER	DESCRIPTION	QTY
1	GA5004065	BOLT M6 X 20 GR8.8 ZP	2
2	GA5050175	BOLT M6 X 65 GR8.8 ZP	1
3	GA5011439	BOLT M6 X 80 GR8.8 ZP	2
4	GA5004711	BOLT M8 X 25 GR8.8 ZP	4
5	GA3000371	ECU, ISOBUS, RAVEN EXPANSION MODULE, REM, XRT 063-0173-965	1
6	GA5048115	NUT M6 NYLOC ZP	5
7	GA5004917	NUT M8 NYLOC ZP	4
8	GA4404570	PLATE, MOUNT, RCM NODE	1
9	GA4406430	PLATE, MOUNT, RAVEN SLANT ANGLE SENSOR	1
10	GA4551340	ROD, THREADED M6, 300mm LONG, SUIT ROLL ANGLE SENSOR XRT	1
11	GA3000378	ROTARY SENSOR KIT, WITH LOOSE HARDWARE, RTP, 50 DEGREE, RAVEN XRT, 11170235009	1
12	GA5004437	WASHER 6mm FLAT SS	10
13	GA5003643	WASHER 8mm FLAT SS HD	8
GA6101110-13 GOLDACRES	CENTRE AND PARALIFT REAR ASSEMBLY, 36M BOOM, PRAIRIE PRO, MY22		REV 00.B

Raven XRT Boom Modules & Centre Section Height Sensor

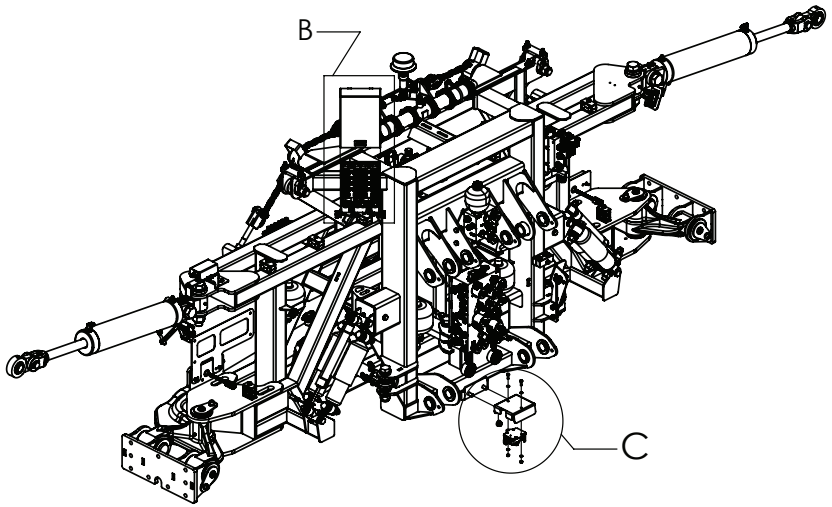

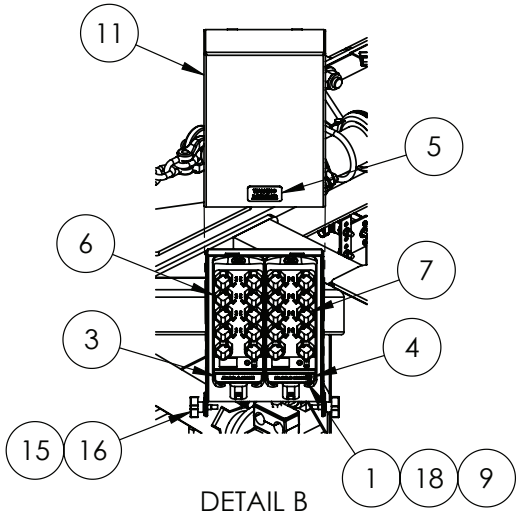

DETAIL B

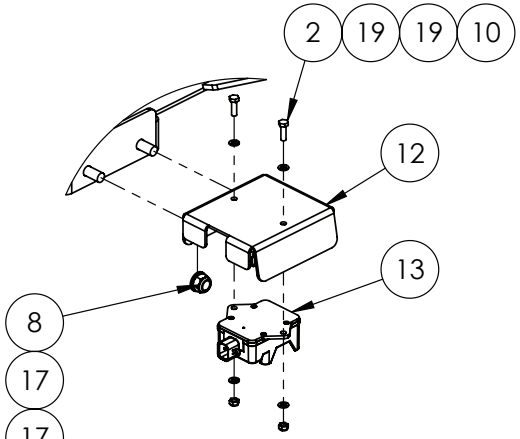

DETAIL C

ABOVE PARTS ARE FITTED ONLY IF RAVEN XRT OPTIONED (30074).

IF DESCRIPTION PREFIX IS ASSEMBLY DRAWING ONLY OR PRODUCTION DRAWING ONLY THE ITEM IS NOT FOR SALE			
ITEM	PART NUMBER	DESCRIPTION	QTY
1	GA0500004	BHCS M5 X 20 SS A2-70	6
2	GA5004065	BOLT M6 X 20 GR8.8 ZP	2
3	GA87001111	DECAL, IFM IO MODULE A	1
4	GA87001112	DECAL, IFM IO MODULE B	1
5	GA8701275	DECAL, WARNING - DO NOT PRESSURE WASH ELECTRICAL CONNECTIONS	1
6	GA3000309	I/O MODULE, 16 OUTPUT CHANNELS, CR2051, IFM, G6 BOOM MODULE A	1
7	GA3000310	I/O MODULE, 8 OUTPUT CHANNELS, 8 INPUT CHANNELS, CR2052, IFM, G6 BOOM MODULE B	1
8	GA5012461	NUT M12 NYLOC ZP	2
9	GA5003974	NUT M5 NYLOC ZP	6
10	GA5048115	NUT M6 NYLOC ZP	2
11	GA4406165	PLATE, IO MODULE COVER, PARALIFT REAR	1
12	GA4406545	PLATE, RADAR SENSOR BRACKET, RAVEN XRT, CENTRE SECTION, TRITECH MY20	1
13	GA3000382	SENSOR, RAVEN XRT BOOM HEIGHT RADAR, 063-0173-962	1
14	GA5000305	SET SCREW M12 X 30 GR8.8 ZP	2
15	GA5066830	SPEED CLIP M6	2
16	GA5069965	STAR KNOB 40 OD M6 X 20	2
17	GA5000577	WASHER 12mm FLAT SS HD	4
18	GA5003983	WASHER 5mm FLAT SS	6
19	GA5004437	WASHER 6mm FLAT SS	4
GA6101110-15 GOLDACRES		CENTRE AND PARALIFT REAR ASSEMBLY, 36M BOOM, PRAIRIE PRO, MY22	REV 01

Raven XRT Boom Sensor Assembly

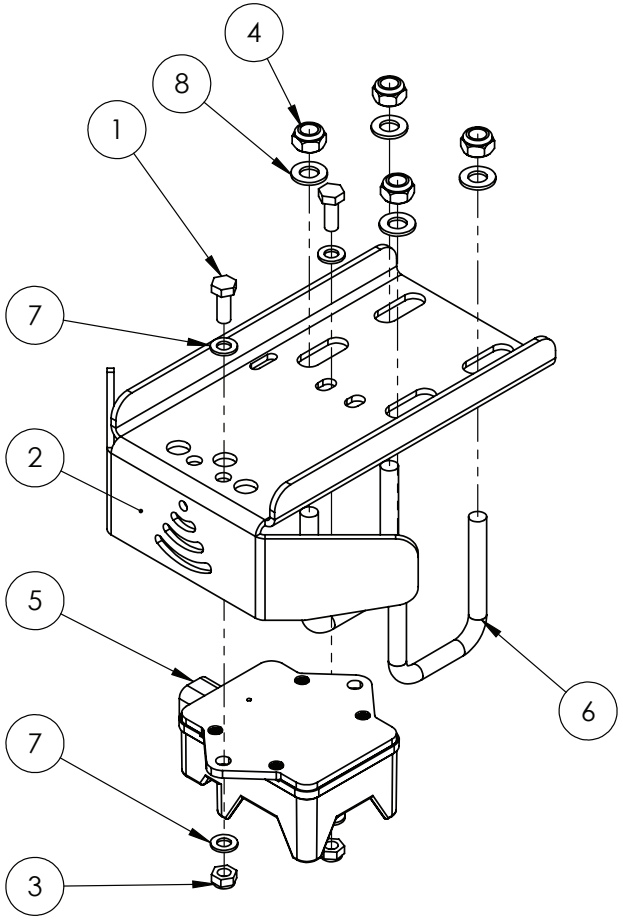

IF DESCRIPTION PREFIX IS ASSEMBLY DRAWING ONLY OR PRODUCTION DRAWING ONLY THE ITEM IS NOT FOR SALE			
ITEM	PART NUMBER	DESCRIPTION	QTY
1	GA5011395	BOLT M6 X 16 SS A2-70	2
2	GA4411280	BRACKET, RAVEN XRT RADAR SENSOR / LIGHT MOUNT, BOOM, WITH FRONT SHIELD	1
3	GA5004429	NUT M6 NYLOC SS	2
4	GA5052590	NUT M8 NYLOC SS	4
5	GA3000382	SENSOR, RAVEN XRT BOOM HEIGHT RADAR, 063-0173-962	1
6	GA0500084	U BOLT SQUARE TOP M8 X 65 X 42, 304 SS	2
7	GA5004437	WASHER 6mm FLAT SS	4
8	GA5003643	WASHER 8mm FLAT SS HD	4
GA4912625 GOLDACRES		ASSEMBLY DRAWING ONLY, BRACKET, SENSOR, RAVEN XRT 107-0235-001	REV 01

16 - Schematics

Hydraulic Schematics, Main, 24mt - 48mt

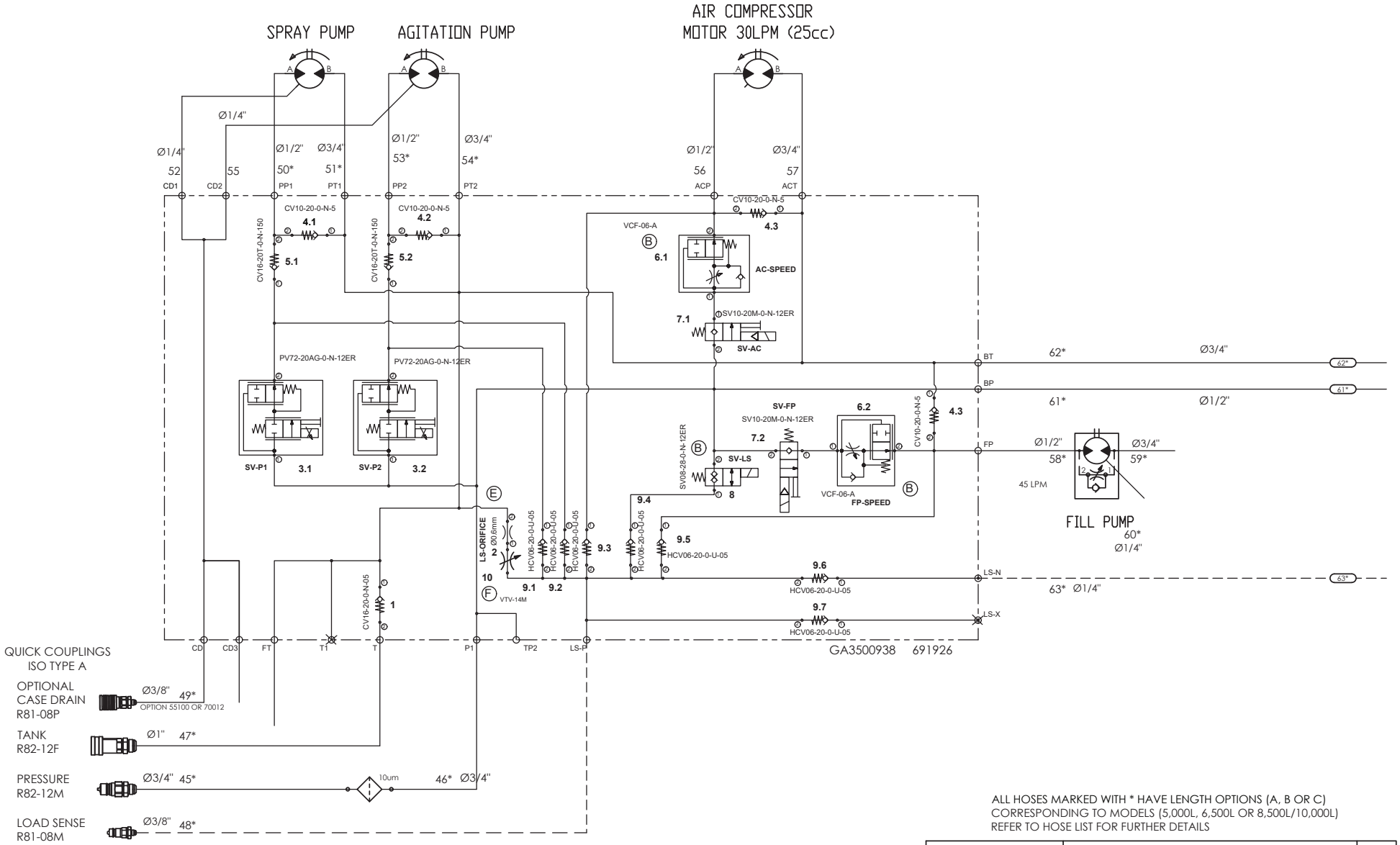

ALL HOSES MARKED WITH * HAVE LENGTH OPTIONS (A, B OR C)
CORRESPONDING TO MODELS (5,000L, 6,500L OR 8,500L/10,000L)
REFER TO HOSE LIST FOR FURTHER DETAILS

GA7500070 GOLDACRES	PRAIRIE PRO HYDRAULIC SYSTEM, 24m to 36m, MY21	REV 06

Hydraulic Schematics, Boom, 24mt - 36mt

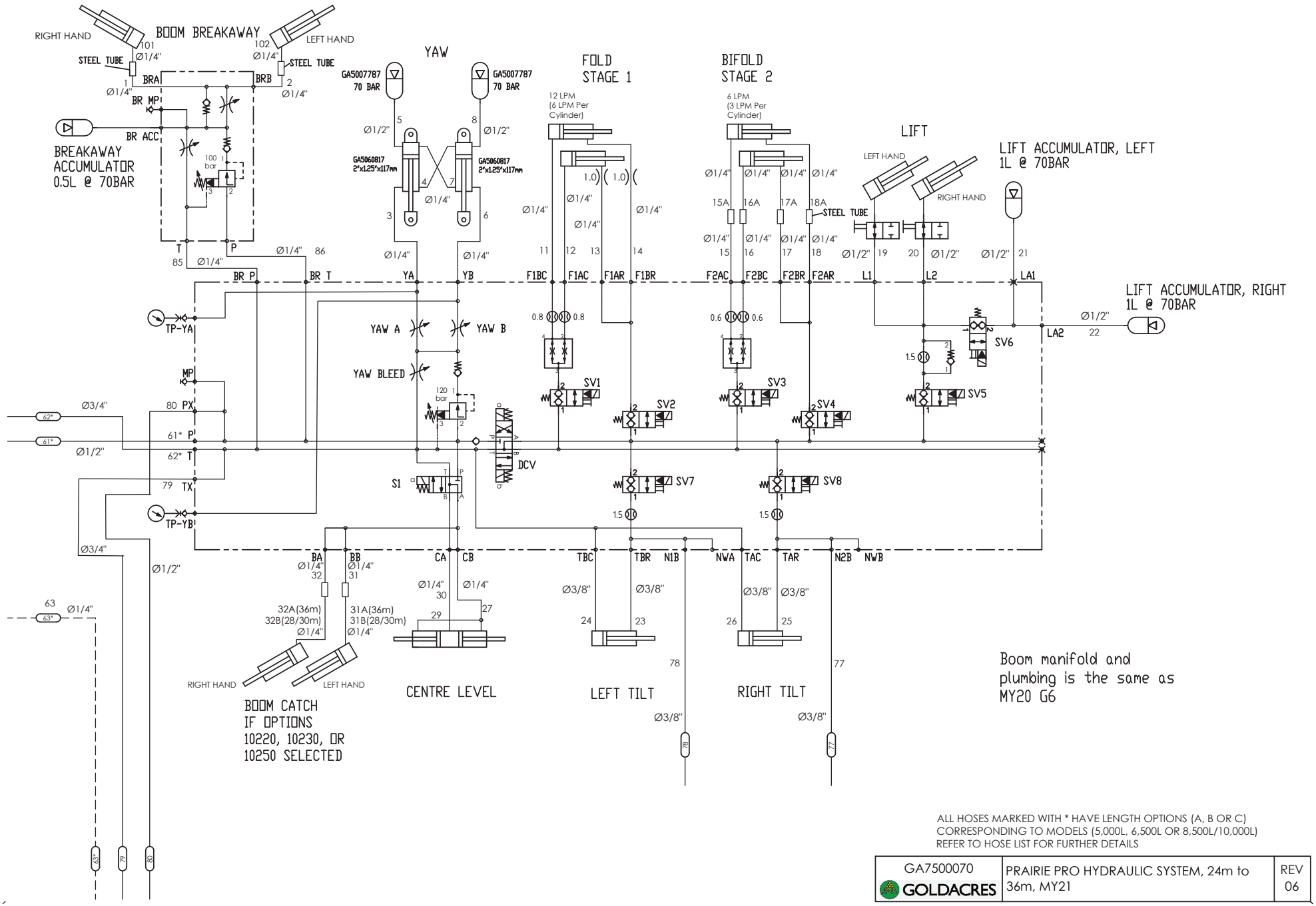

ALL HOSES MARKED WITH * HAVE LENGTH OPTIONS (A, B OR C) CORRESPONDING TO MODELS (5,000L, 6,500L OR 8,500L/10,000L) REFER TO HOSE LIST FOR FURTHER DETAILS

GA7500070 GOLDACRES	PRAIRIE PRO HYDRAULIC SYSTEM, 24m to 36m, MY21	REV 06

Hydraulic Schematics, Raven Ultraglide XRT, 24mt - 36mt

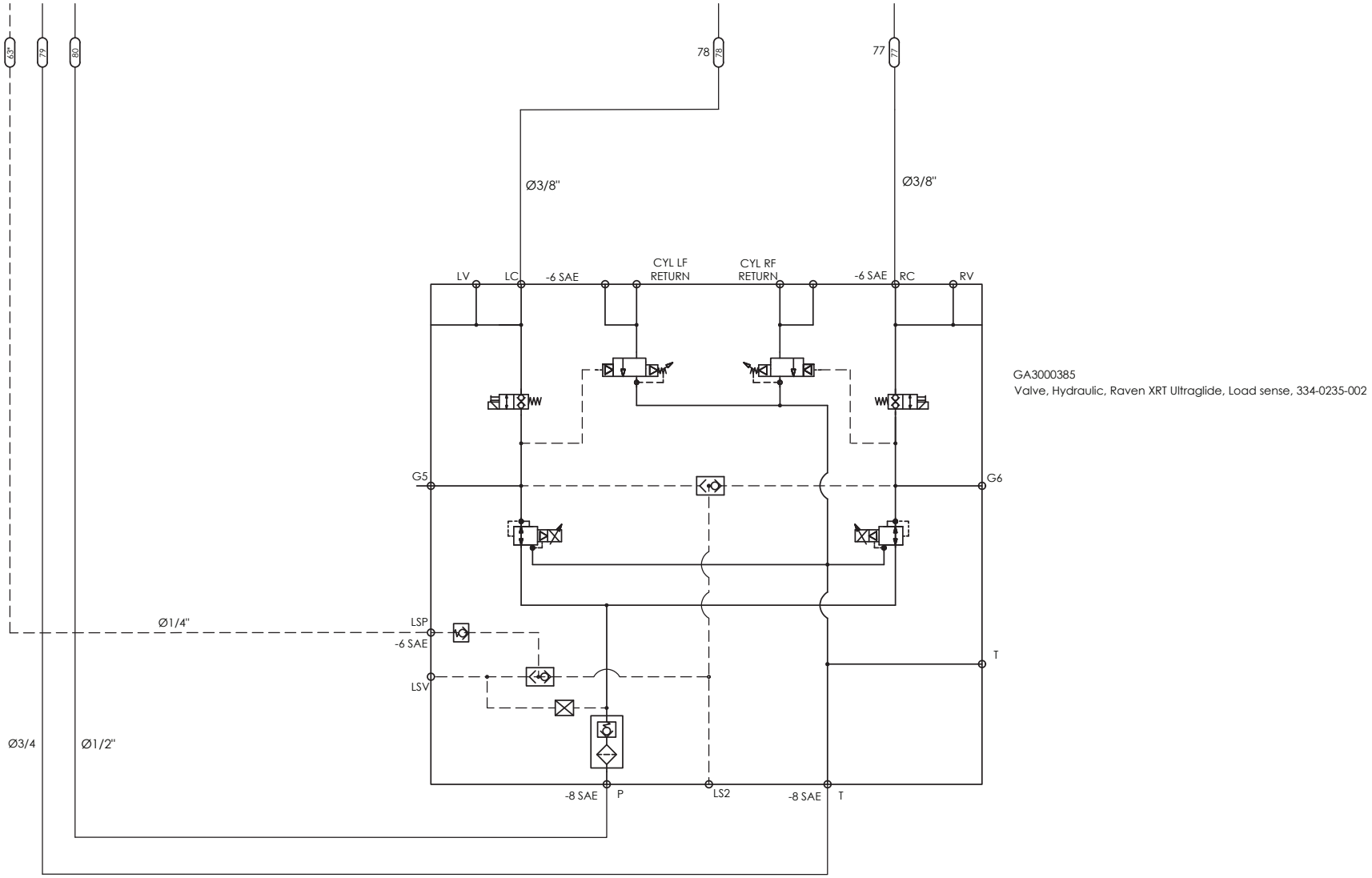

Raven Ultraglide XRT

ALL HOSES MARKED WITH * HAVE LENGTH OPTIONS (A, B OR C)
CORRESPONDING TO MODELS (5,000L, 6,500L OR 8,500L/10,000L)
REFER TO HOSE LIST FOR FURTHER DETAILS

GA7500070 GOLDACRES	PRAIRIE PRO HYDRAULIC SYSTEM, 24m to 36m, MY21	REV 06

Hydraulic Schematics, Main, 48mt

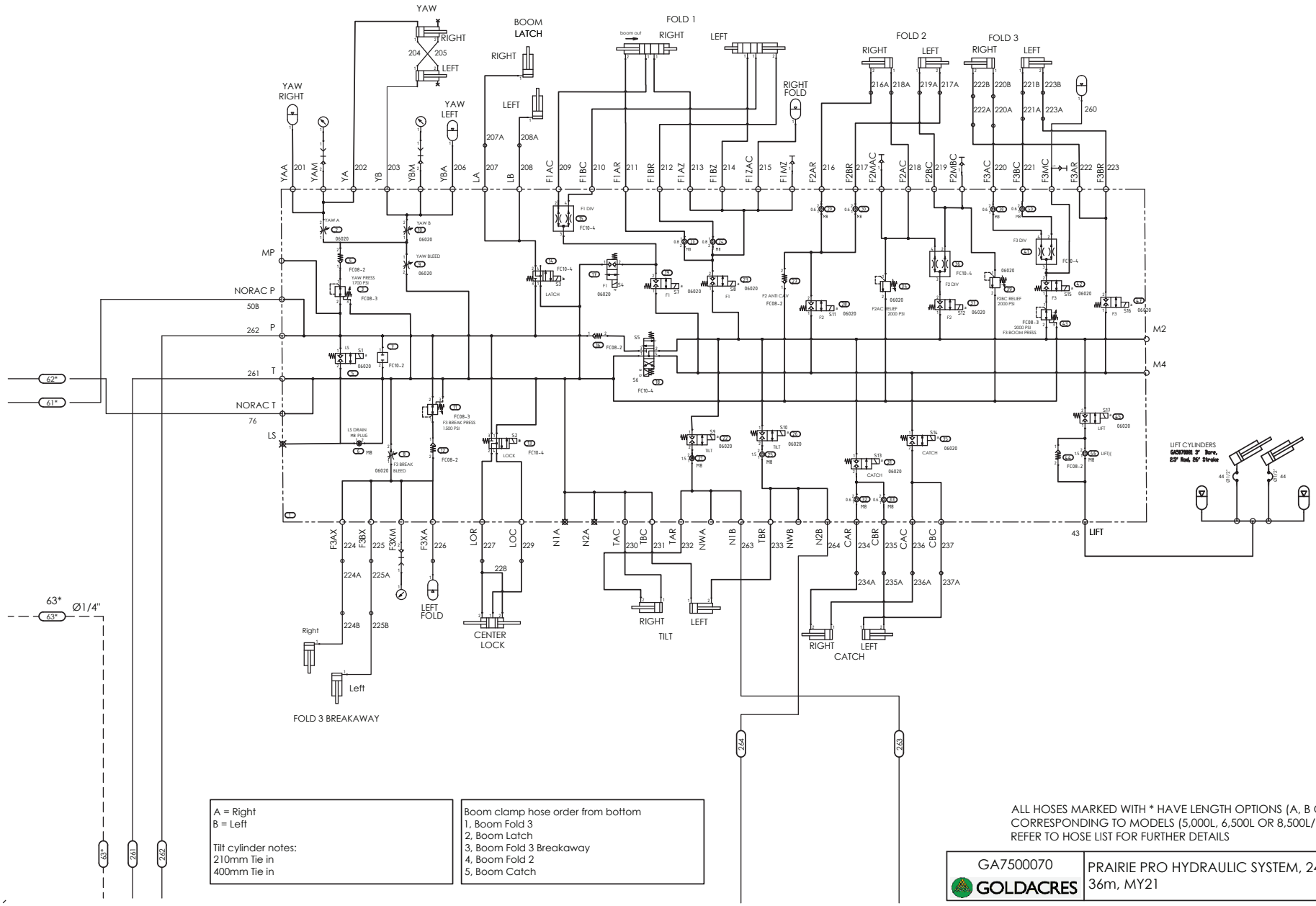

A = Right
B = Left

Tilt cylinder notes:
210mm Tie in
400mm Tie in

Boom clamp hose order from bottom
1, Boom Fold 3
2, Boom Latch
3, Boom Fold 3 Breakaway
4, Boom Fold 2
5, Boom Catch

ALL HOSES MARKED WITH * HAVE LENGTH OPTIONS (A, B OR C)
CORRESPONDING TO MODELS (5,000L, 6,500L OR 8,500L/10,000L)
REFER TO HOSE LIST FOR FURTHER DETAILS

GA7500070 GOLDACRES	PRAIRIE PRO HYDRAULIC SYSTEM, 24m to 36m, MY21	REV 06

Hydraulic Schematics, Raven Ultraglide XRT, 48mt

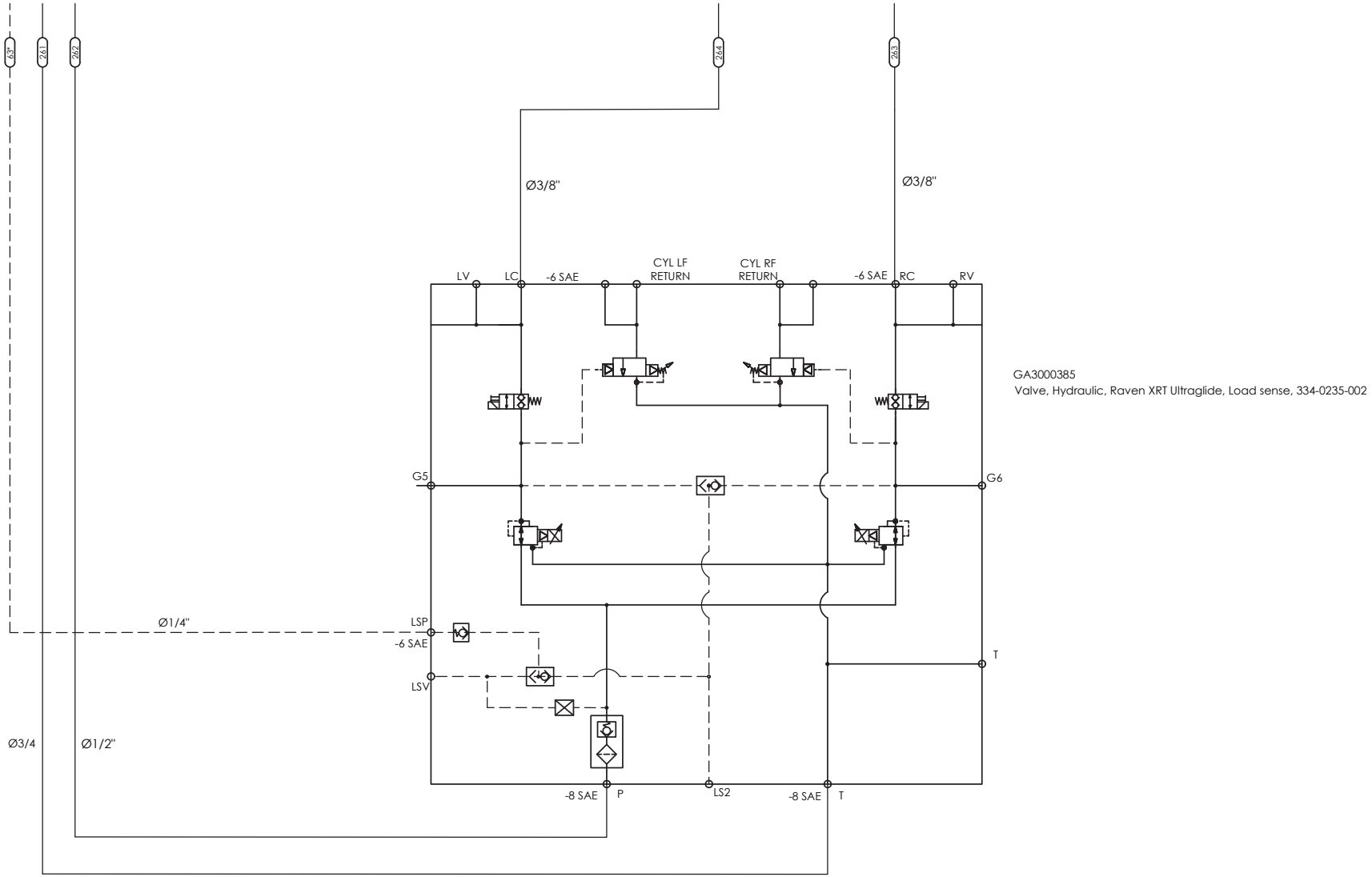

Raven Ultraglide XRT

ALL HOSES MARKED WITH * HAVE LENGTH OPTIONS (A, B OR C)
CORRESPONDING TO MODELS (5,000L, 6,500L OR 8,500L/10,000L)
REFER TO HOSE LIST FOR FURTHER DETAILS

GA7500070 GOLDACRES	PRAIRIE PRO HYDRAULIC SYSTEM, 24m to 36m, MY21	REV 06

Hydraulic Schematics, Hydraulic Jack, Hydraulic Brakes

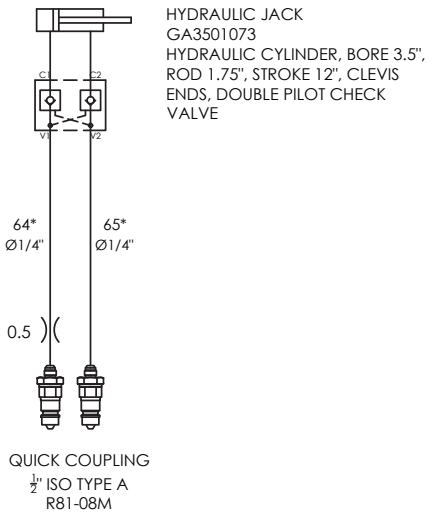

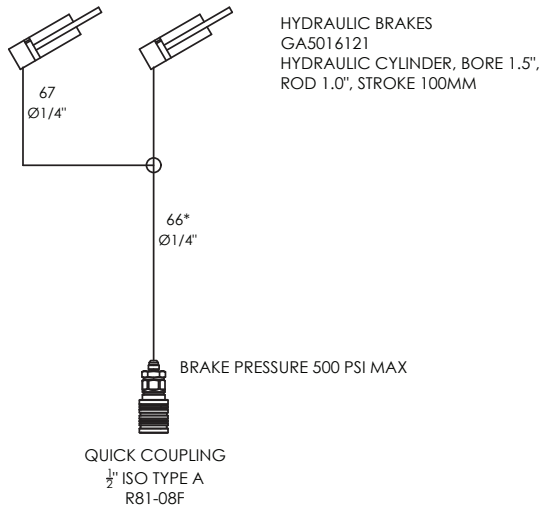

ALL HOSES MARKED WITH * HAVE LENGTH OPTIONS (A, B OR C)
CORRESPONDING TO MODELS (5,000L, 6,500L OR 8,500L/10,000L)
REFER TO HOSE LIST FOR FURTHER DETAILS

GA7500070 GOLDACRES	PRAIRIE PRO HYDRAULIC SYSTEM, 24m to 36m, MY21	REV 06

Hydraulic Hoses (Contact Goldacres Dealer Support)

Plumbing Schematics, Diaphragm Pump

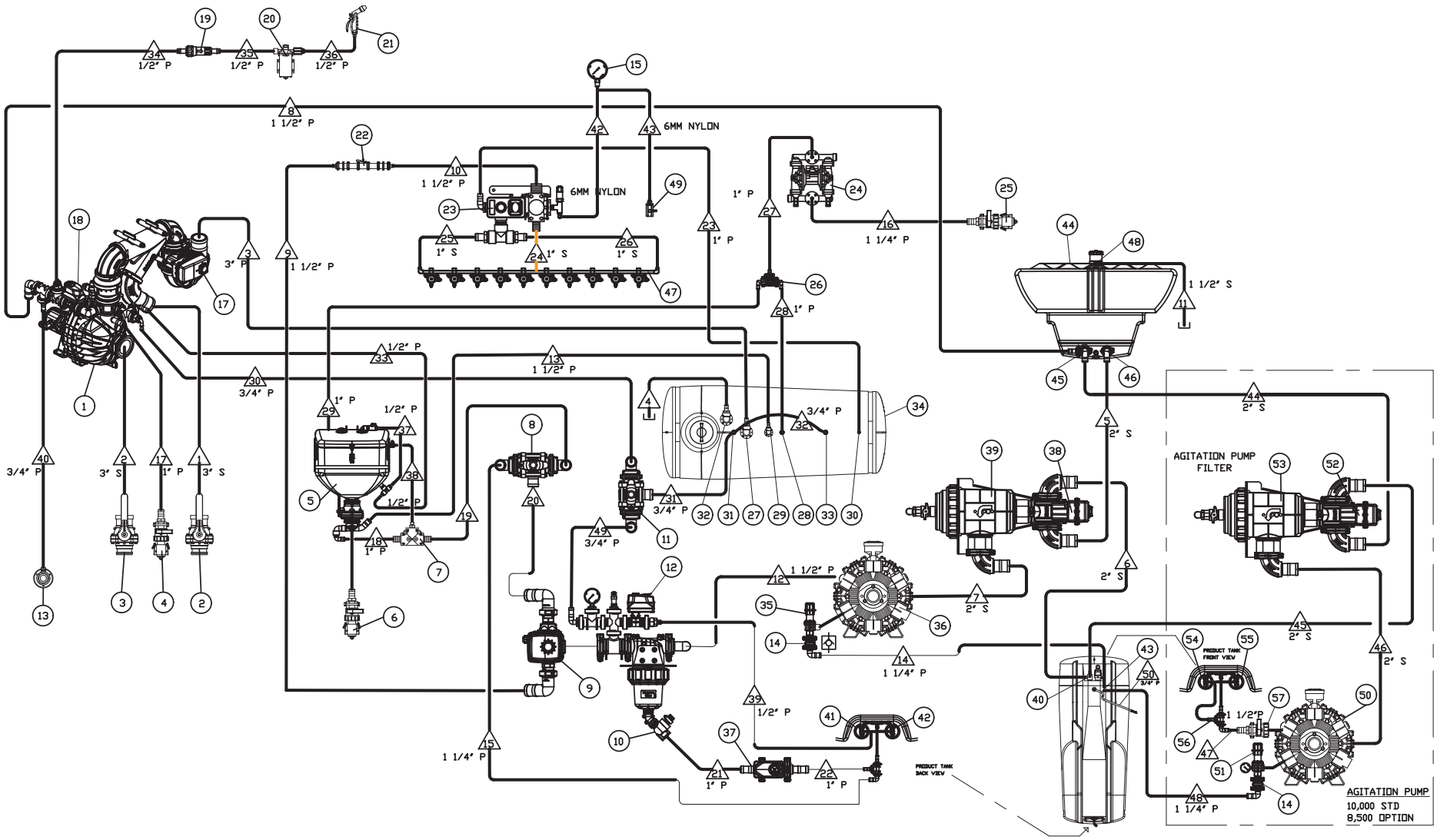

GA7500071 GOLDACRES	PLUMBING DESCRIPTIONS AND HOSE LIST, ZETA 260L/min DIAPHRAGM PUMP, PRAIRIE PRO MY21	REV 03

Plumbing Schematics, Diaphragm Pump

(X) FEATURE DESCRIPTIONS

ITEM	DESCRIPTION
1	FILL PUMP 3" HYPRO
2	3" FILL BALL VALVE, DIRTY LINE
3	3" FILL BALL VALVE. CLEAN LINE
4	1" FILL PUMP AUXILLARY OUTLET BALL VALVE
5	HOPPER
6	1" CHEMICAL INDUCTION PROBE BALL VALVE FOR HOPPER VENTURI
7	HOPPER TEE
8	HOPPER/BYPASS 3 WAY MANUAL BALL VALVE, BOTTOM LOAD
9	BOOM REGULATOR 3 WAY BALL VALVE VALVE, SIDE LOAD
10	PRESSURE FILTER
11	TANK RINSE 3 WAY MANUAL BALL VALVE
12	AGITATOR JET 2 WAY ELECTRIC BALL VALVE
13	MICROMATIC RINSE SOCKET
14	CHECK VALVE, 1" MANIFOLD FLANGE
15	SPRAY PRESSURE GAUGE
16	3" CHECK VALVE
17	3" TANK FILL 2 WAY ELECTRIC BALL VALVE, PROPORTIONAL
18	RINSE TANK FILL 2 WAY ELECTRIC BALL VALVE
19	IN LINE FILTER
20	WASH DOWN GUN PUMP
21	WASH DOWN GUN
22	BOOM FLOW METER ASSEMBLY
23	BOOM RECIRCULATION 3 WAY ELECTRIC BALL VALVE, SIDE LOAD
24	CHEMICAL INDUCTION PUMP, GRACO HUSKY
25	1' CHEMICAL INDUCTION PROBE BALL VALVE FOR CHEMICAL PUMP
26	CHEMICAL PUMP OUTLET SELECTOR 1" 3 WAY BALL VALVE
27	TANK FILL INLET - PRODUCT TANK
28	CHEMICAL INDUCTION PUMP TANK INLET - PRODUCT TANK
29	HOPPER TANK INLET - PRODUCT TANK
30	BOOM RECIRCULATION TANK INLET - PRODUCT TANK
31	TANK RINSE NOZZLE 1 - PRODUCT TANK
32	TANK OVERFLOW OUTLET - PRODUCT TANK
33	TANK RINSE NOZZLE 2 - PRODUCT TANK
34	PRODUCT TANK
35	RELIEF VALVE (ONLY FITTED WITH UDOR PUMP)
36	PUMP - SPRAY
37	FILTER CLEAN 2 WAY ELECTRIC BALL VALVE
38	PUMP SUCTION TANK SELECTOR 3 WAY ELECTRIC BALL VALVE BL
39	PUMP SUCTION FILTER
40	PUMP OUTLET - PRODUCT TANK
41	AGITATOR 1
42	AGITATOR 2
43	PRESSURE RELIEF VALVE INLET - PRODUCT TANK
44	RINSE TANK
45	FILL INLET - RINSE TANK
46	PUMP OUTLET - RINSE TANK
47	BOOM
48	RINSE TANK OVERFLOW
49	GAUGE DRAIN VALVE
50	PUMP - TANK AGITATION
51	RELIEF VALVE FOR PUMP - TANK AGITATION
52	AGITATION PUMP SUCTION TANK SELECTOR 3 WAY ELECTRIC BALL VALVE BL
53	PUMP SUCTION FILTER - TANK AGITATION
54	AGITATOR 3 - AGITATION PUMP
55	AGITATOR 4 - AGITATION PUMP
56	DISTRIBUTION TEE - AGITATION PUMP
57	AGITATOR ZETA PUMP, PRESSURE DEADHEAD BALL VALVE

(X) HOSE LIST

HOSE	SIZE	DESCRIPTION	LENGTH 5000L(mm)	LENGTH 6500L(mm)	LENGTH 8500L(mm)	LENGTH 10000L(mm)
1	3" PVC	DIRTY FILL 3' BALL VALVE TO FILL PUMP ASSEMBLY	280	280	280	280
2	3" PVC	CLEAN FILL 3' BALL VALVE TO FILL PUMP ASSEMBLY	N/A	N/A	N/A	N/A
3	3" PVC	FILL PUMP ASSEMBLY TO PRODUCT TANK	2600	2600		3000
4	3" PVC	PRODUCT TANK OVERFLOW HOSE	3000	3000		3500
5	2" S	RINSE TANK TO SUCTION FILTER BALL VALVE	800	800	900	800
6	2" S	PRODUCT TANK TO SUCTION FILTER BALL VALVE	600	600	800	800
7	2" S	SUCTION FILTER TO SPRAY PUMP	2150	2150	2500	2500
8	1 1/2" P	FILL PUMP TO RINSE TANK	800	800	800	800
9	1 1/2" P	REGULATOR VALVE TO FLOW METER	7800	8500	10000	10000
10	1 1/2" P	FLOW METER TO BOOM FLOW DISTRIBUTOR	1200	1200	1200	1200
11	1 1/2" PVC	RINSE TANK OVERFLOW	1000	1000	1000	1000
12	1 1/2" P	SPRAY PUMP TO PRESSURE FILTER	1700	1700	1700	1700
13	1 1/2" PVC	HOPPER OUTLET TO PRODUCT TANK	6500	6500	7000	7000
14	1 1/4" P	PRESSURE RELIEF VALVE TO PRODUCT TANK (WHERE FITTED)	1300	1300	1400	
15	1 1/4" P	HOPPER/BYPASS VALVE TO AGITATOR	4700	5500	6000	6000
16	1 1/4" S	CHEMICAL PROBE CAMLOCK VALVE TO CHEMICAL PUMP	600	600	600	600
17	1" P	FILL PUMP TO AUXILLARY OUTLET BALL VALVE	540	540	540	540
18	1" P	HOPPER PRESSURE TEE TO HOPPER BOTTOM VENTURI PORT	3700	3700	3700	3700
19	1" P	HOPPER/BYPASS VALVE TO HOPPER PRESSURE TEE	500	500	500	500
20	1 1/2" P	REGULATOR VALVE TO HOPPER/BYPASS VALVE	2500	2500	2700	2700
21	1" P	PRESSURE FILTER TO FILTER CLEAN VALVE	1100	1100	1100	1100
22	1" P	FILTER CLEAN VALVE TO AGITATOR	4500	5200	5500	5500
23	1" P	BOOM RECIRC VALVE TO PRODUCT TANK	4500	4500	4500	4500
24	1" S	BOOM FLOW DISTRIBUTOR TO BOOM POLY CENTRE				
25	1" S	BOOM FLOW DISTRIBUTOR TO LEFT BOOM POLY END				
26	1" S	BOOM FLOW DISTRIBUTOR TO RIGHT BOOM POLY END				
27	1" P	CHEMICAL PUMP TO 3 WAY BALL VALVE	600	600	600	600
28	1" P	3 WAY BALL VALVE TO PRODUCT TANK	5000	5000	5000	5000
29	1" P	3 WAY BALL VALVE TO HOPPER	3200	3200	3200	3200
30	3/4' P	FILL PUMP TO TANK RINSE BALL VALVE	560	560	560	560
31	3/4' P	TANK RINSE VALVE TO TANK RINSE NOZZLE A	4000	4000	4000	4000
32	3/4' P	TANK RINSE NOZZLE A TO TANK RINSE NOZZLE B	1050	1830	960 / 1030	1000 / 1050
33	1/2" P	FILL PUMP TO HOPPER DRUM RINSE TEE	3700	3700	3700	3700
34	1/2" P	FILL PUMP TO WASH DOWN GUN PUMP FILTER	1700	1700	1700	1700
35	1/2" P	WASH DOWN GUN PUMP FILTER TO WASHDOWN GUN PUMP				
36	1/2" P	WASHDOWN GUN PUMP TO WASHDOWN GUN	4500	4500	4500	4500
37	1/2" P	HOPPER DRUM RINSE TEE TO HOPPER RINSE NOZZLE	850	850	850	850
38	1/2" P	HOPPER PRESSURE TEE TO HOPPER MIXING JET BALL VALVE	3500	3500	3500	3500
39	1/2" P	AGITATOR BALL VALVE TO AGITATOR JETS	5000		5500	5500
40	3/4" P	FILL PUMP TO MICROMATIC RINSE SOCKET BALL VALVE	1260	1260	1260	1260
41						
42	6MM NYLON	BOOM RECIRCULATION VALVE TO PRESSURE GAUGE	11000			12500
43	6MM NYLON	PRESSURE GAUGE TO DRAIN VALVE	5000	5000		
44	2" S	RINSE TANK TO SUCTION FILTER VALVE - AGITATION PUMP	N/A	N/A	1250	1250
45	2" S	PRODUCT TANK TO SUCTION FILTER VALVE - AGITATION PUMP	N/A	N/A	950	950
46	2" S	SUCTION FILTER TO AGITATION PUMP	N/A	N/A		1700
47	1 1/2" P	AGITATION PUMP TO DISTRIBUTOR TEE	N/A	N/A		2000
48	1 1/4" P	RELIEF VALVE TO TANK - AGITATION PUMP	N/A	N/A		
49	3/4' P	TANK RINSE VALVE TO PRESSURE FILTER AND REG ASSEMBLY	3600	3600	3600	3600
50	3/4" P	MAIN TANK SUMP DRAIN TO DRAIN TAP	600	600		900
51						

GA7500070 GOLDACRES	PLUMBING DESCRIPTIONS AND HOSE LIST, ZETA 260L/min DIAPHRAGM PUMP, PRAIRIE PRO MY21	REV 03

Plumbing Schematics, Centrifugal Pump

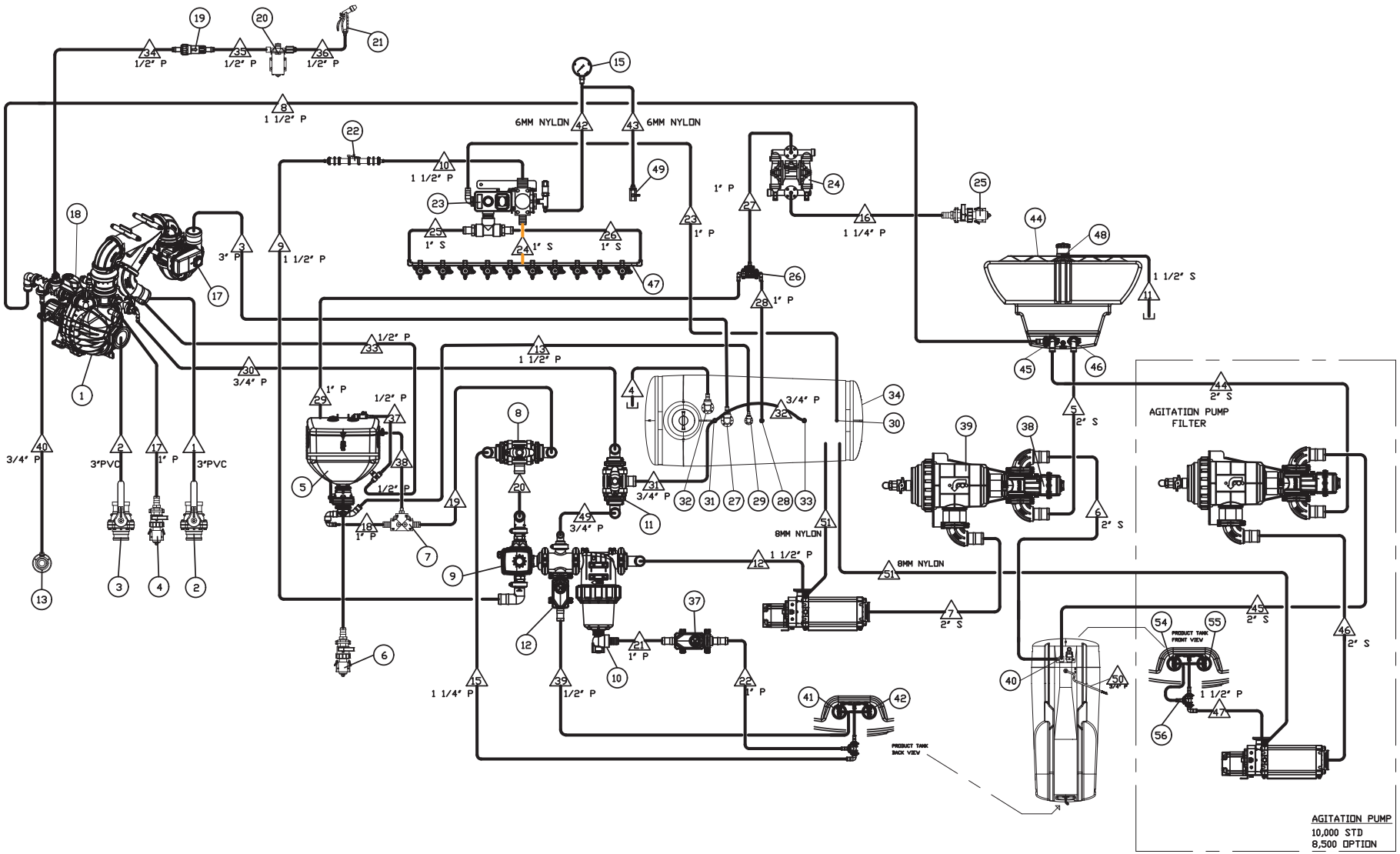

GA7500071 GOLDACRES	PLUMBING DESCRIPTIONS AND HOSE LIST,ARAG MP400 PUMP,CENTRIFUGAL PRAIRIE PRO MY20	REV 03

Plumbing Schematics, Centrifugal Pump

(X) FEATURE DESCRIPTIONS

ITEM	DESCRIPTION
1	FILL PUMP 3" HYPRO
2	3" FILL BALL VALVE, DIRTY LINE
3	3" FILL BALL VALVE. CLEAN LINE
4	1" FILL PUMP AUXILLARY OUTLET BALL VALVE
5	HOPPER
6	1" CHEMICAL INDUCTION PROBE BALL VALVE FOR HOPPER VENTURI
7	HOPPER TEE
8	HOPPER/BYPASS 3 WAY MANUAL BALL VALVE, BOTTOM LOAD
9	BOOM REGULATOR 3 WAY BALL VALVE VALVE, SIDE LOAD
10	PRESSURE FILTER
11	TANK RINSE 3 WAY MANUAL BALL VALVE
12	AGITATOR JET 2 WAY ELECTRIC BALL VALVE
13	MICROMATIC RINSE SOCKET
14	
15	SPRAY PRESSURE GAUGE
16	3" CHECK VALVE
17	3" TANK FILL 2 WAY ELECTRIC BALL VALVE, PROPORTIONAL
18	RINSE TANK FILL 2 WAY ELECTRIC BALL VALVE
19	IN LINE FILTER
20	WASH DOWN GUN PUMP
21	WASH DOWN GUN
22	BOOM FLOW METER ASSEMBLY
23	BOOM RECIRCULATION 3 WAY ELECTRIC BALL VALVE, SIDE LOAD
24	CHEMICAL INDUCTION PUMP, GRACO HUSKY
25	1' CHEMICAL INDUCTION PROBE BALL VALVE FOR CHEMICAL PUMP
26	CHEMICAL PUMP OUTLET SELECTOR 1" 3 WAY BALL VALVE
27	TANK FILL INLET - PRODUCT TANK
28	CHEMICAL INDUCTION PUMP TANK INLET - PRODUCT TANK
29	HOPPER TANK INLET - PRODUCT TANK
30	BOOM RECIRCULATION TANK INLET - PRODUCT TANK
31	TANK RINSE NOZZLE 1 - PRODUCT TANK
32	TANK OVERFLOW OUTLET - PRODUCT TANK
33	TANK RINSE NOZZLE 2 - PRODUCT TANK
34	PRODUCT TANK
35	
36	PUMP - SPRAY
37	FILTER CLEAN 2 WAY ELECTRIC BALL VALVE
38	PUMP SUCTION TANK SELECTOR 3 WAY ELECTRIC BALL VALVE BL
39	PUMP SUCTION FILTER
40	PUMP OUTLET - PRODUCT TANK
41	AGITATOR 1
42	AGITATOR 2
43	
44	RINSE TANK
45	FILL INLET - RINSE TANK
46	PUMP OUTLET - RINSE TANK
47	BOOM
48	RINSE TANK OVERFLOW
49	GAUGE DRAIN VALVE
50	PUMP - TANK AGITATION
51	
52	AGITATION PUMP SUCTION TANK SELECTOR 3 WAY ELECTRIC BALL VALVE BL
53	PUMP SUCTION FILTER - TANK AGITATION
54	AGITATOR 3 - AGITATION PUMP
55	AGITATOR 4 - AGITATION PUMP
56	DISTRIBUTION TEE - AGITATION PUMP

(X) HOSE LIST

HOSE	SIZE	DESCRIPTION	LENGTH 5000L	LENGTH 6500L	LENGTH 8500L	LENGTH 10000L
1	3" PVC	DIRTY FILL 3' BALL VALVE TO FILL PUMP ASSEMBLY	280	280	280	280
2	3" PVC	CLEAN FILL 3' BALL VALVE TO FILL PUMP ASSEMBLY	N/A	N/A	N/A	N/A
3	3" PVC	FILL PUMP ASSEMBLY TO PRODUCT TANK	2600	2600		3000
4	3" PVC	PRODUCT TANK OVERFLOW HOSE	3000	3000		3500
5	2" S	RINSE TANK TO SUCTION FILTER BALL VALVE	800	800	900	800
6	2" S	PRODUCT TANK TO SUCTION FILTER BALL VALVE	600	600	800	800
7	2" S	SUCTION FILTER TO SPRAY PUMP	2150	2150	2500	2500
8	1 1/2" P	FILL PUMP TO RINSE TANK	800	800	800	800
9	1 1/2" P	REGULATOR VALVE TO FLOW METER	7800	8500	10000	10000
10	1 1/2" P	FLOW METER TO BOOM FLOW DISTRIBUTOR	1200	1200	1200	1200
11	1 1/2" PVC	RINSE TANK OVERFLOW	1000	1000	1000	1000
12	1 1/2" P	SPRAY PUMP TO PRESSURE FILTER	1700	1700	1700	1700
13	1 1/2" PVC	HOPPER OUTLET TO PRODUCT TANK	6500	6500	7000	7000
14	N/A	N/A	N/A	N/A	N/A	N/A
15	1 1/4" P	HOPPER/BYPASS VALVE TO AGITATOR	4700	5500	6000	6000
16	1 1/4" S	CHEMICAL PROBE CAMLOCK VALVE TO CHEMICAL PUMP	600	600	600	600
17	1" P	FILL PUMP TO AUXILLARY OUTLET BALL VALVE	540	540	540	540
18	1" P	HOPPER PRESSURE TEE TO HOPPER BOTTOM VENTURI PORT	3700	3700	3700	3700
19	1" P	HOPPER/BYPASS VALVE TO HOPPER PRESSURE TEE	500	500	500	500
20	1 1/2" P	REGULATOR VALVE TO HOPPER/BYPASS VALVE	2500	2500	2700	2700
21	1" P	PRESSURE FILTER TO FILTER CLEAN VALVE	1100	1100	1100	1100
22	1" P	FILTER CLEAN VALVE TO AGITATOR	4500	5200	5500	5500
23	1" P	BOOM RECIRC VALVE TO PRODUCT TANK	4500	4500	4500	4500
24	1" S	BOOM FLOW DISTRIBUTOR TO BOOM POLY CENTRE				
25	1" S	BOOM FLOW DISTRIBUTOR TO LEFT BOOM POLY END				
26	1" S	BOOM FLOW DISTRIBUTOR TO RIGHT BOOM POLY END				
27	1" P	CHEMICAL PUMP TO 3 WAY BALL VALVE	600	600	600	600
28	1" P	3 WAY BALL VALVE TO PRODUCT TANK	5000	5000	5000	5000
29	1" P	3 WAY BALL VALVE TO HOPPER	3200	3200	3200	3200
30	3/4' P	FILL PUMP TO TANK RINSE BALL VALVE	560	560	560	560
31	3/4' P	TANK RINSE VALVE TO TANK RINSE NOZZLE A	4000	4000	4000	4000
32	3/4' P	TANK RINSE NOZZLE A TO TANK RINSE NOZZLE B	1050	1830	960 / 1030	1000 / 1050
33	1/2" P	FILL PUMP TO HOPPER DRUM RINSE TEE	3700	3700	3700	3700
34	1/2" P	FILL PUMP TO WASH DOWN GUN PUMP FILTER	1700	1700	1700	1700
35	1/2" P	WASH DOWN GUN PUMP FILTER TO WASHDOWN GUN PUMP				
36	1/2" P	WASHDOWN GUN PUMP TO WASHDOWN GUN	4500	4500	4500	4500
37	1/2" P	HOPPER DRUM RINSE TEE TO HOPPER RINSE NOZZLE	850	850	850	850
38	1/2" P	HOPPER PRESSURE TEE TO HOPPER MIXING JET BALL VALVE	3500	3500	3500	3500
39	1/2" P	AGITATOR BALL VALVE TO AGITATOR JETS	5000		5500	5500
40	3/4" P	FILL PUMP TO MICROMATIC RINSE SOCKET BALL VALVE	1260	1260	1260	1260
41						
42	6MM NYLON	BOOM RECIRCULATION VALVE TO PRESSURE GAUGE	11000			12500
43	6MM NYLON	PRESSURE GAUGE TO DRAIN VALVE	5000	5000		
44	2" S	RINSE TANK TO SUCTION FILTER VALVE - AGITATION PUMP	N/A	N/A	1250	1250
45	2" S	PRODUCT TANK TO SUCTION FILTER VALVE - AGITATION PUMP	N/A	N/A	950	950
46	2" S	SUCTION FILTER TO AGITATION PUMP	N/A	N/A		1700
47	1 1/2" P	AGITATION PUMP TO DISTRIBUTOR TEE	N/A	N/A		2100
48	N/A	N/A	N/A	N/A	N/A	N/A
49	3/4' P	TANK RINSE VALVE TO PRESSURE FILTER AND REG ASSEMBLY	3600	3600	3600	3600
50	3/4" P	MAIN TANK SUMP DRAIN TO DRAIN TAP	600	600		900
51	8mm NYLON	ARAG MP400 PUMP BREATHER TO TOP OF MAIN TANK				

GA7500071 GOLDACRES	PLUMBING DESCRIPTIONS AND HOSE LIST,ARAG MP400 PUMP,CENTRIFUGAL PRAIRIE PRO MY20	REV 03

Electrical Schematics, Raven XRT, Boom Leveling

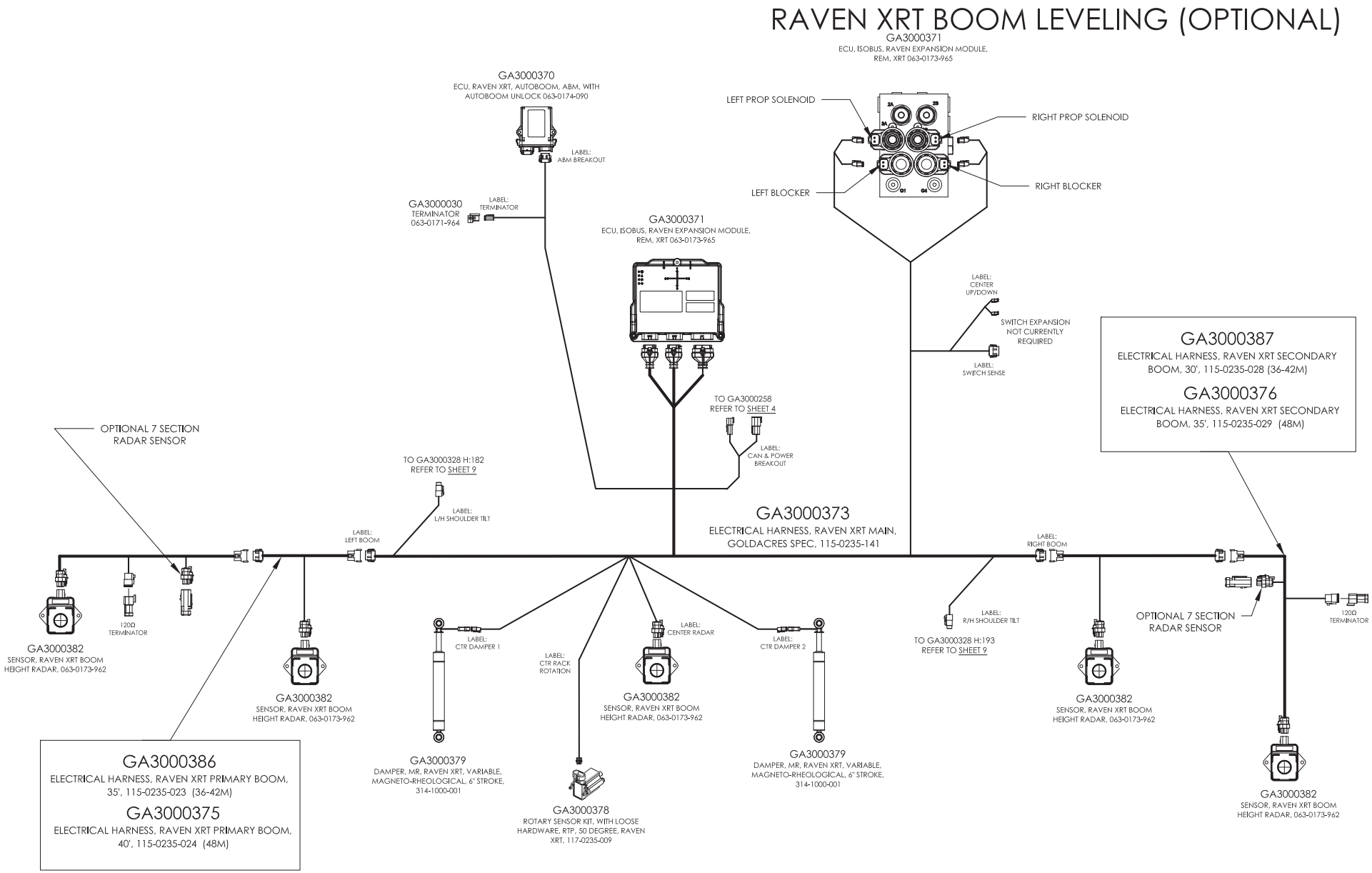

GA7500036 GOLDACRES	PRAIRIE PRO ELECTRICAL LAYOUT MY21	REV 02

Electrical Schematics, Raven RCM with Direct Control Masters

RAVEN RCM SYSTEM WITH MAC VALVES (STANDARD)

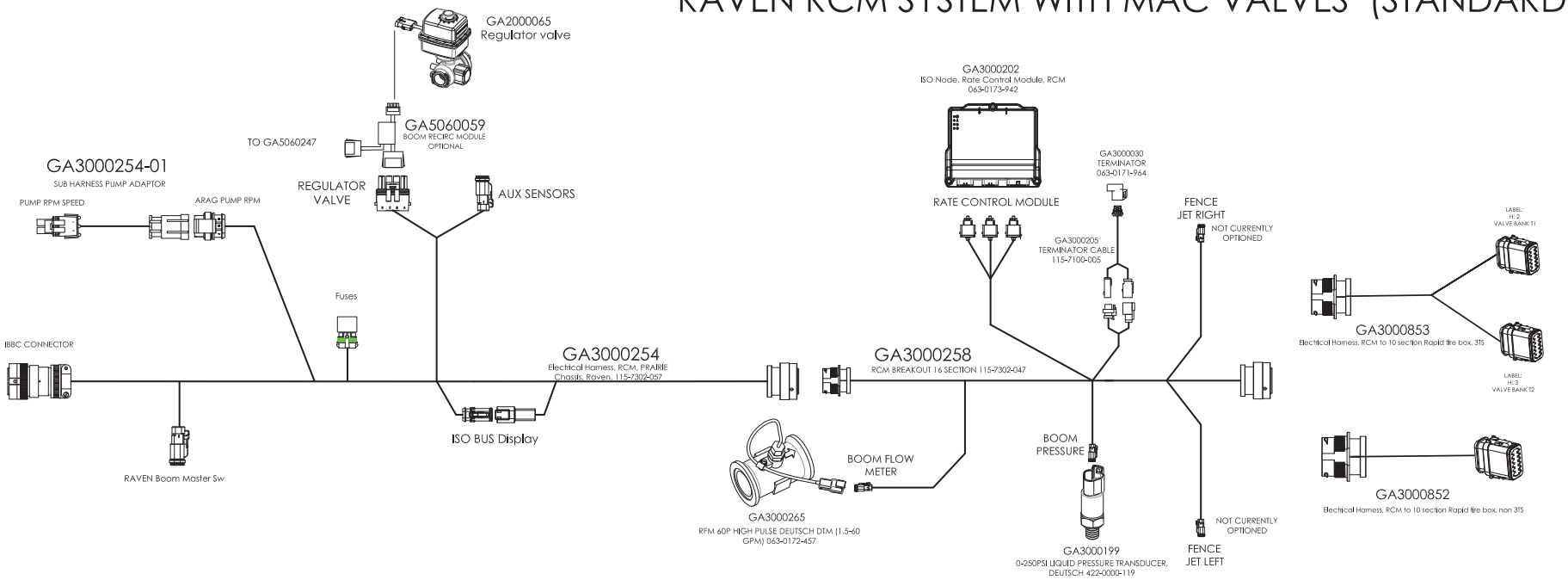

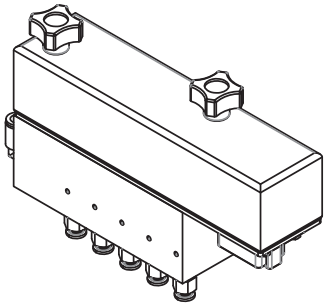

GA7000029
Pneumatic Manifold, Rapid Fire, 10 Section, Bullet Valve

GA7500036 GOLDACRES	PRAIRIE PRO ELECTRICAL LAYOUT MY21	REV 02

Electrical Schematics, Raven RCM with Direct Control Masters

RAVEN RCM SYSTEM WITH DIRECT CONTROL MASTERS (OPTIONAL)

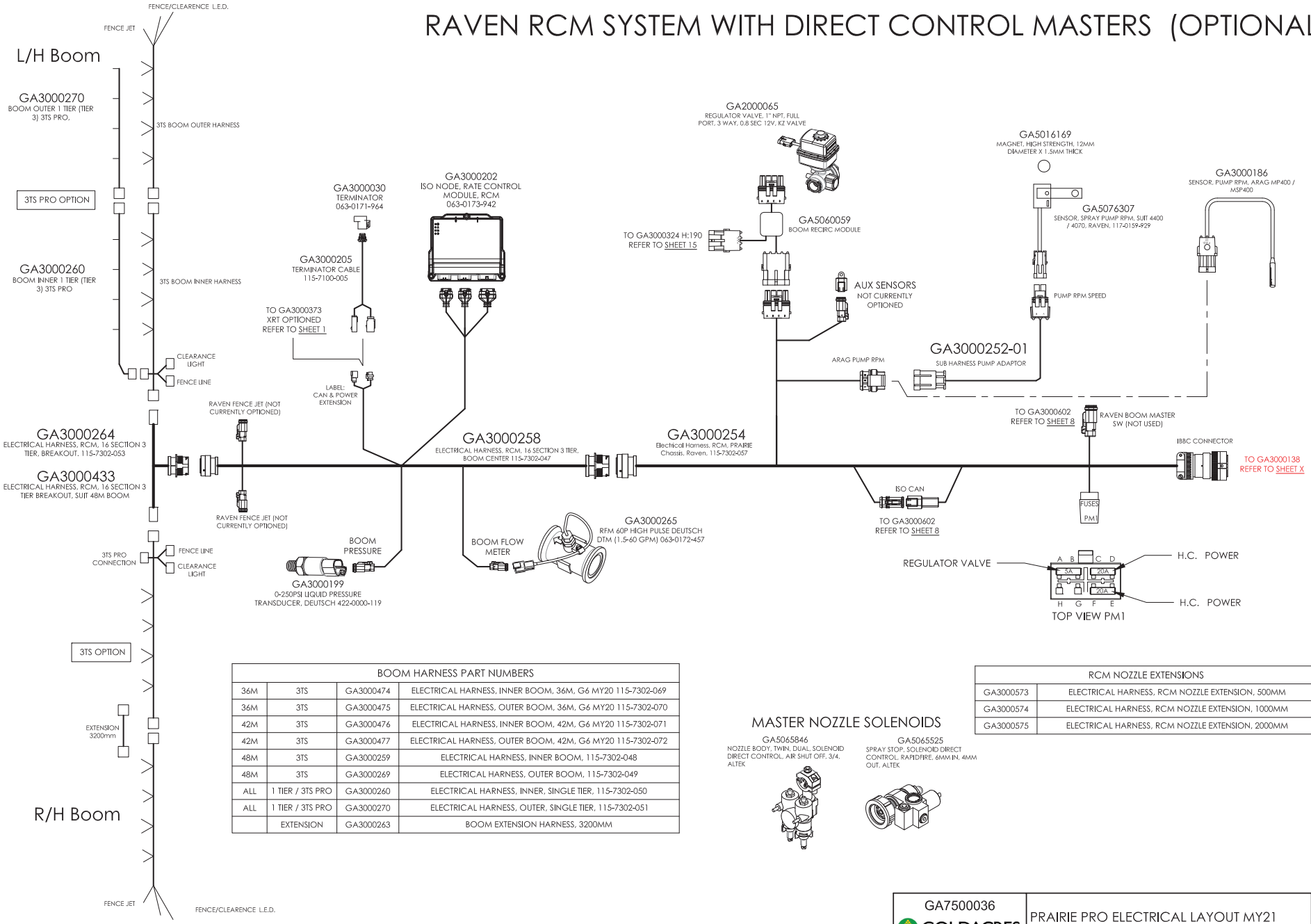

BOOM HARNESS PART NUMBERS			
36M	3TS	GA3000474	ELECTRICAL HARNESS, INNER BOOM, 36M, G6 MY20 115-7302-069
36M	3TS	GA3000475	ELECTRICAL HARNESS, OUTER BOOM, 36M, G6 MY20 115-7302-070
42M	3TS	GA3000476	ELECTRICAL HARNESS, INNER BOOM, 42M, G6 MY20 115-7302-071
42M	3TS	GA3000477	ELECTRICAL HARNESS, OUTER BOOM, 42M, G6 MY20 115-7302-072
48M	3TS	GA3000259	ELECTRICAL HARNESS, INNER BOOM, 115-7302-048
48M	3TS	GA3000269	ELECTRICAL HARNESS, OUTER BOOM, 115-7302-049
ALL	1 TIER / 3TS PRO	GA3000260	ELECTRICAL HARNESS, INNER, SINGLE TIER, 115-7302-050
ALL	1 TIER / 3TS PRO	GA3000270	ELECTRICAL HARNESS, OUTER, SINGLE TIER, 115-7302-051
	EXTENSION	GA3000263	BOOM EXTENSION HARNESS, 3200MM

RCM NOZZLE EXTENSIONS	
GA3000573	ELECTRICAL HARNESS, RCM NOZZLE EXTENSION, 500MM
GA3000574	ELECTRICAL HARNESS, RCM NOZZLE EXTENSION, 1000MM
GA3000575	ELECTRICAL HARNESS, RCM NOZZLE EXTENSION, 2000MM

MASTER NOZZLE SOLENOIDS

GA5065846
NOZZLE BODY, TWIN, DUAL, SOLENOID DIRECT CONTROL, AIR SHUT OFF, 3/4, ALTEK

GA5065525
SPRAY STOP, SOLENOID DIRECT CONTROL, RAPIDFIRE, 6MM IN, 4MM OUT, ALTEK

GA7500036 GOLDACRES	PRAIRIE PRO ELECTRICAL LAYOUT MY21	REV 02

RAVEN HAWKEYE SYSTEM (OPTIONAL)

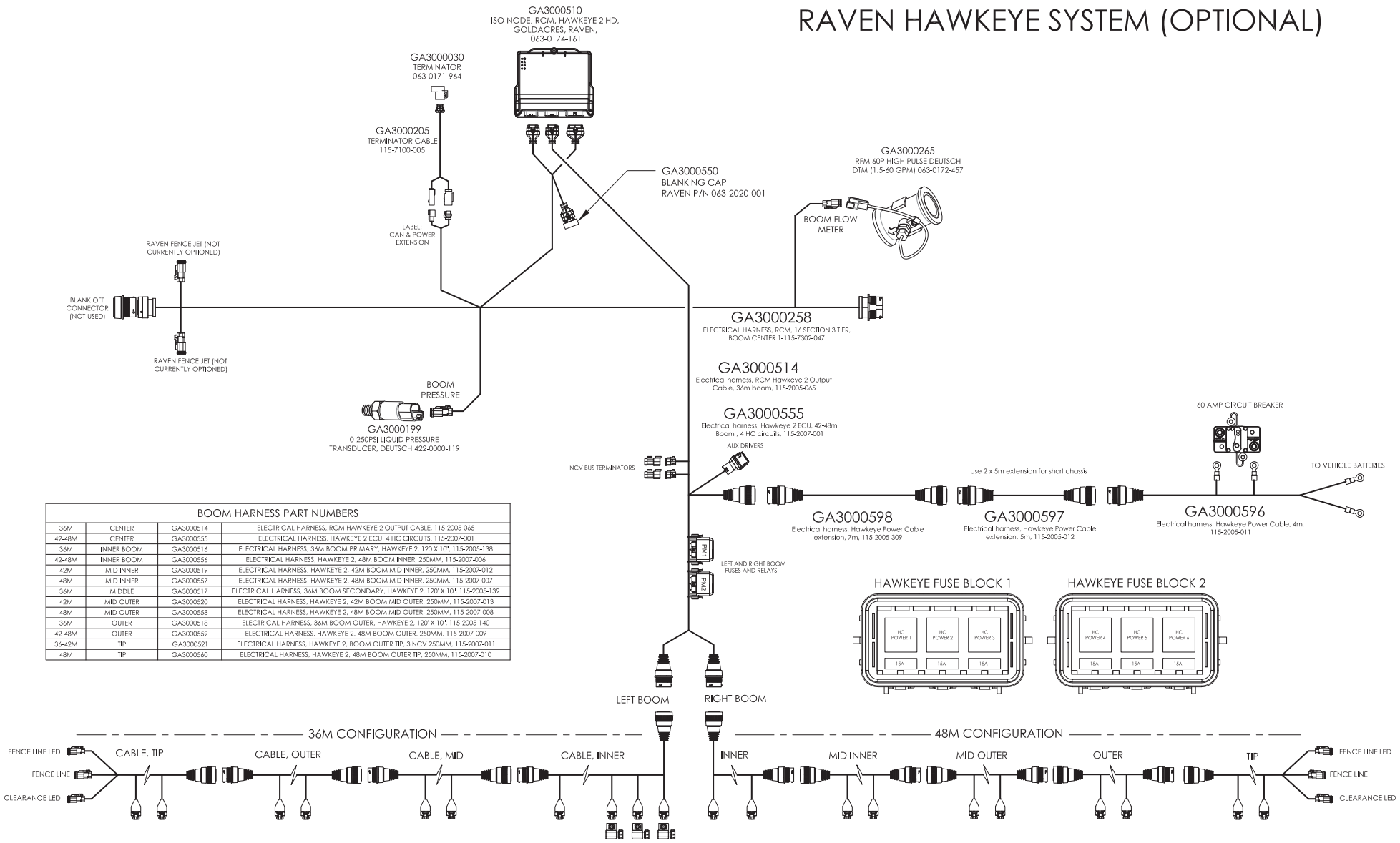

BOOM HARNESS PART NUMBERS			
36M	CENTER	GA3000514	ELECTRICAL HARNESS, RCM HAWKEYE 2 OUTPUT CABLE, 115-2005-065
42-48M	CENTER	GA3000555	ELECTRICAL HARNESS, HAWKEYE 2 ECU, 4 HC CIRCUITS, 115-2007-001
36M	INNER BOOM	GA3000516	ELECTRICAL HARNESS, 36M BOOM PRIMARY, HAWKEYE 2, 120 X 10", 115-2005-138
42-48M	INNER BOOM	GA3000556	ELECTRICAL HARNESS, HAWKEYE 2, 48M BOOM INNER, 250MM, 115-2007-006
42M	MID INNER	GA3000519	ELECTRICAL HARNESS, HAWKEYE 2, 42M BOOM MID INNER, 250MM, 115-2007-012
48M	MID INNER	GA3000557	ELECTRICAL HARNESS, HAWKEYE 2, 48M BOOM MID INNER, 250MM, 115-2007-007
36M	MIDDLE	GA3000517	ELECTRICAL HARNESS, 36M BOOM SECONDARY, HAWKEYE 2, 120' X 10", 115-2005-139
42M	MID OUTER	GA3000520	ELECTRICAL HARNESS, HAWKEYE 2, 42M BOOM MID OUTER, 250MM, 115-2007-013
48M	MID OUTER	GA3000558	ELECTRICAL HARNESS, HAWKEYE 2, 48M BOOM MID OUTER, 250MM, 115-2007-008
36M	OUTER	GA3000518	ELECTRICAL HARNESS, 36M BOOM OUTER, HAWKEYE 2, 120' X 10", 115-2005-140
42-48M	OUTER	GA3000559	ELECTRICAL HARNESS, HAWKEYE 2, 48M BOOM OUTER, 250MM, 115-2007-009
36-42M	TIP	GA3000521	ELECTRICAL HARNESS, HAWKEYE 2, BOOM OUTER TIP, 3 NCV 250MM, 115-2007-011
48M	TIP	GA3000560	ELECTRICAL HARNESS, HAWKEYE 2, 48M BOOM OUTER TIP, 250MM, 115-2007-010

GA7500036 GOLDACRES	PRAIRIE PRO ELECTRICAL LAYOUT MY21	REV 02

Electrical Schematics, Smart Steer

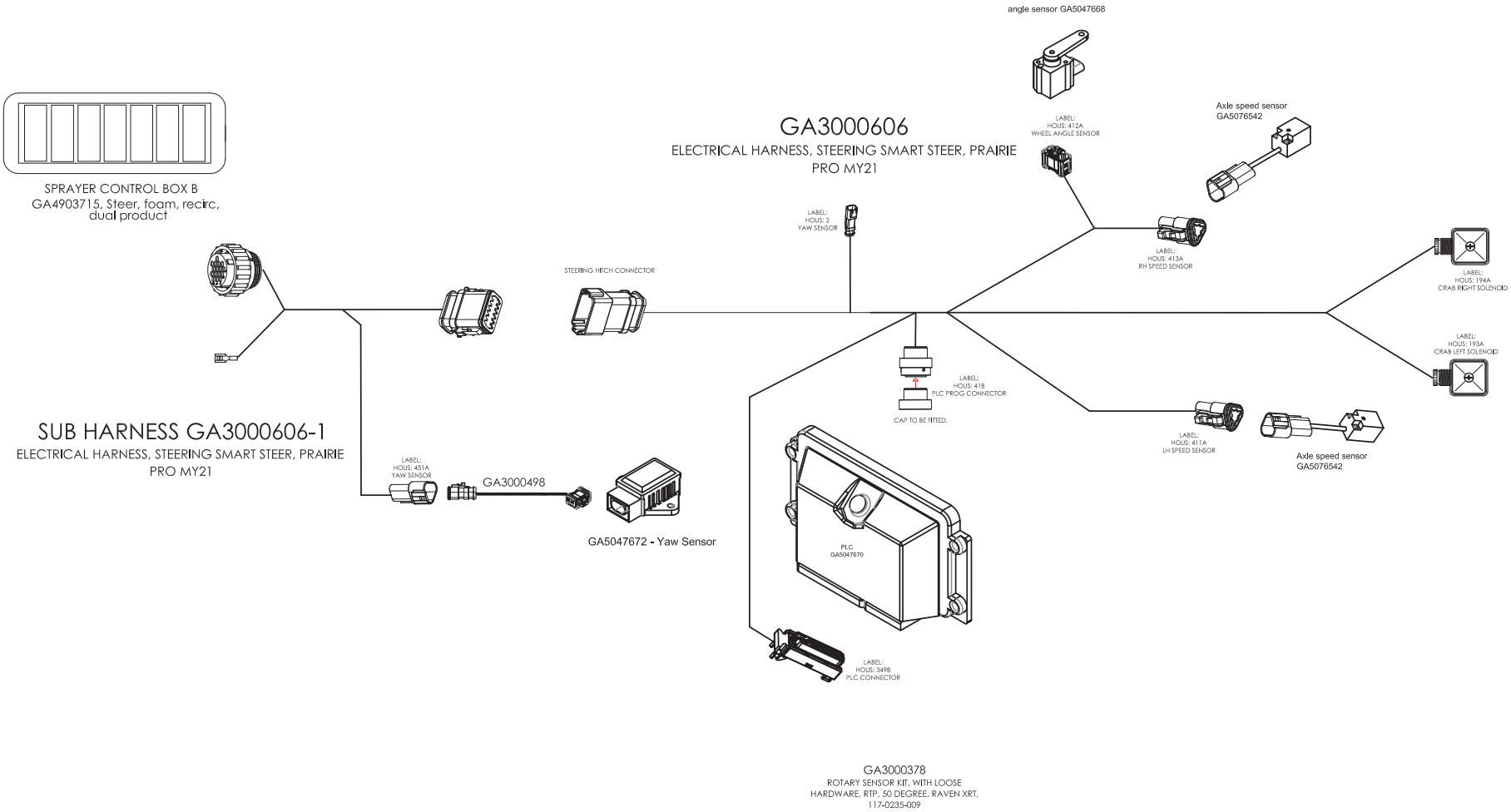

GA7500036 GOLDACRES	PRAIRIE PRO ELECTRICAL LAYOUT MY21	REV 02

Electrical Schematics, Cabin

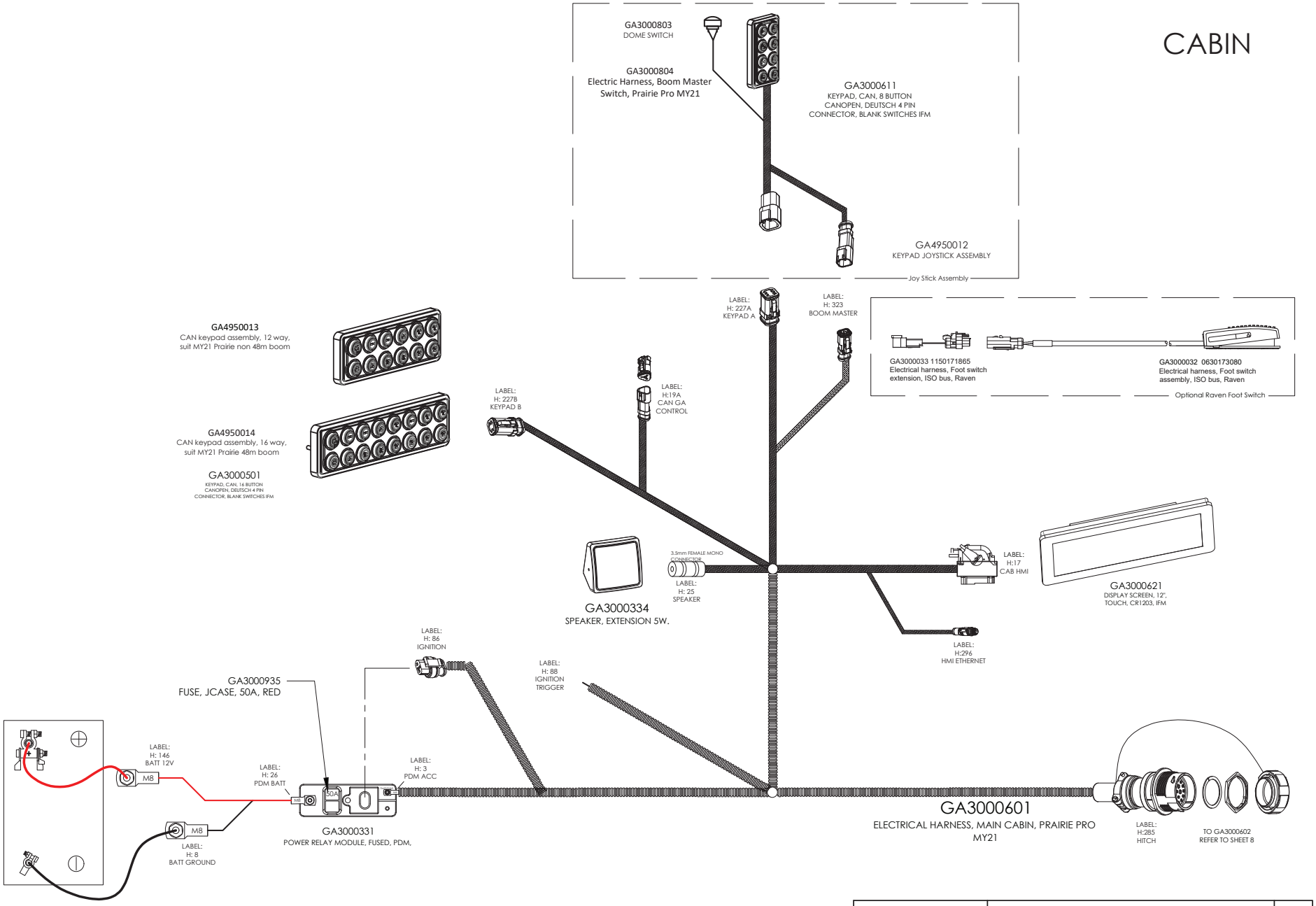

GA7500036 GOLDACRES	PRAIRIE PRO ELECTRICAL LAYOUT MY21	REV 02

Electrical Schematics, Main Chassis

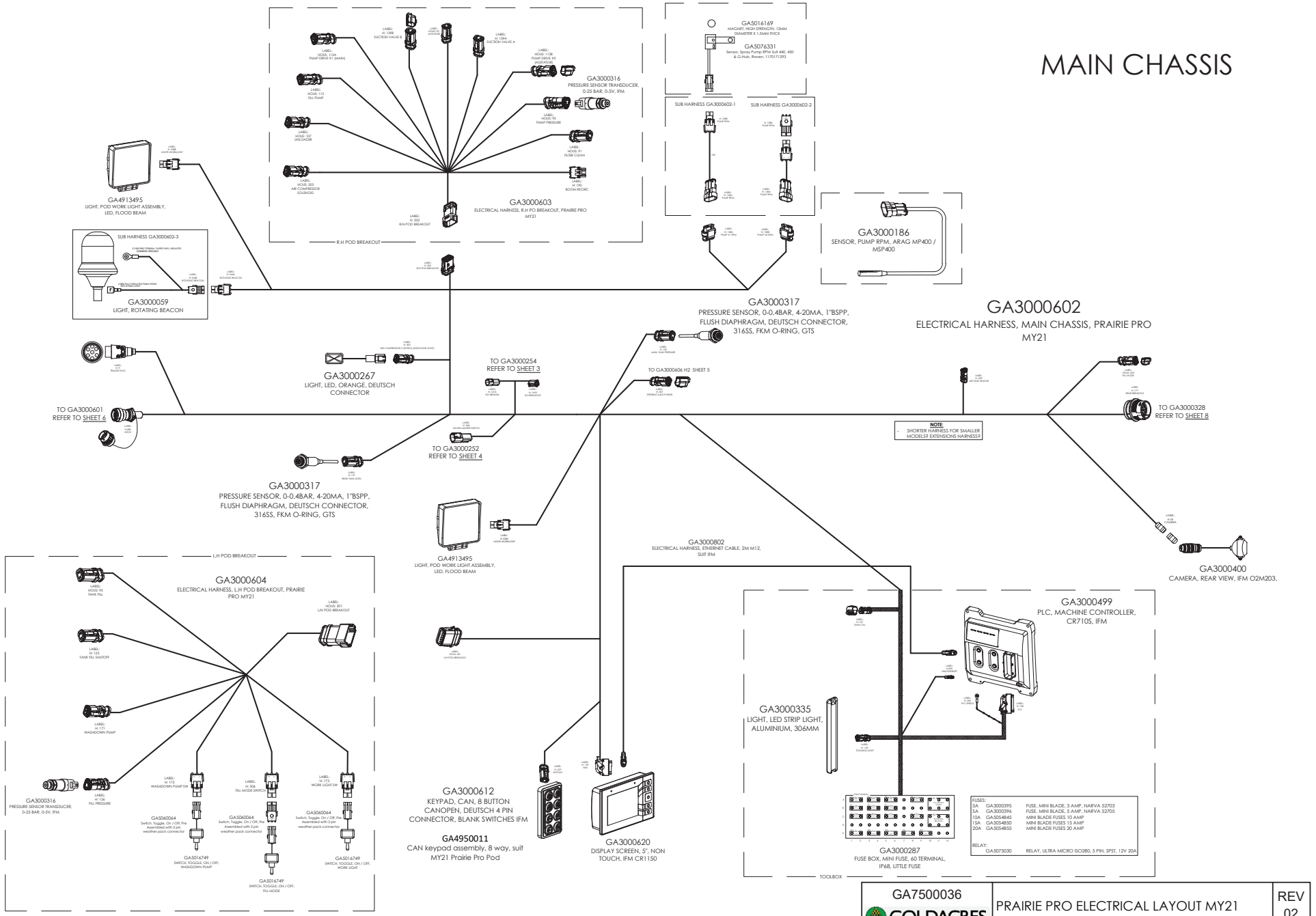

Electrical Schematics, Boom Centre

BOOM CENTRE

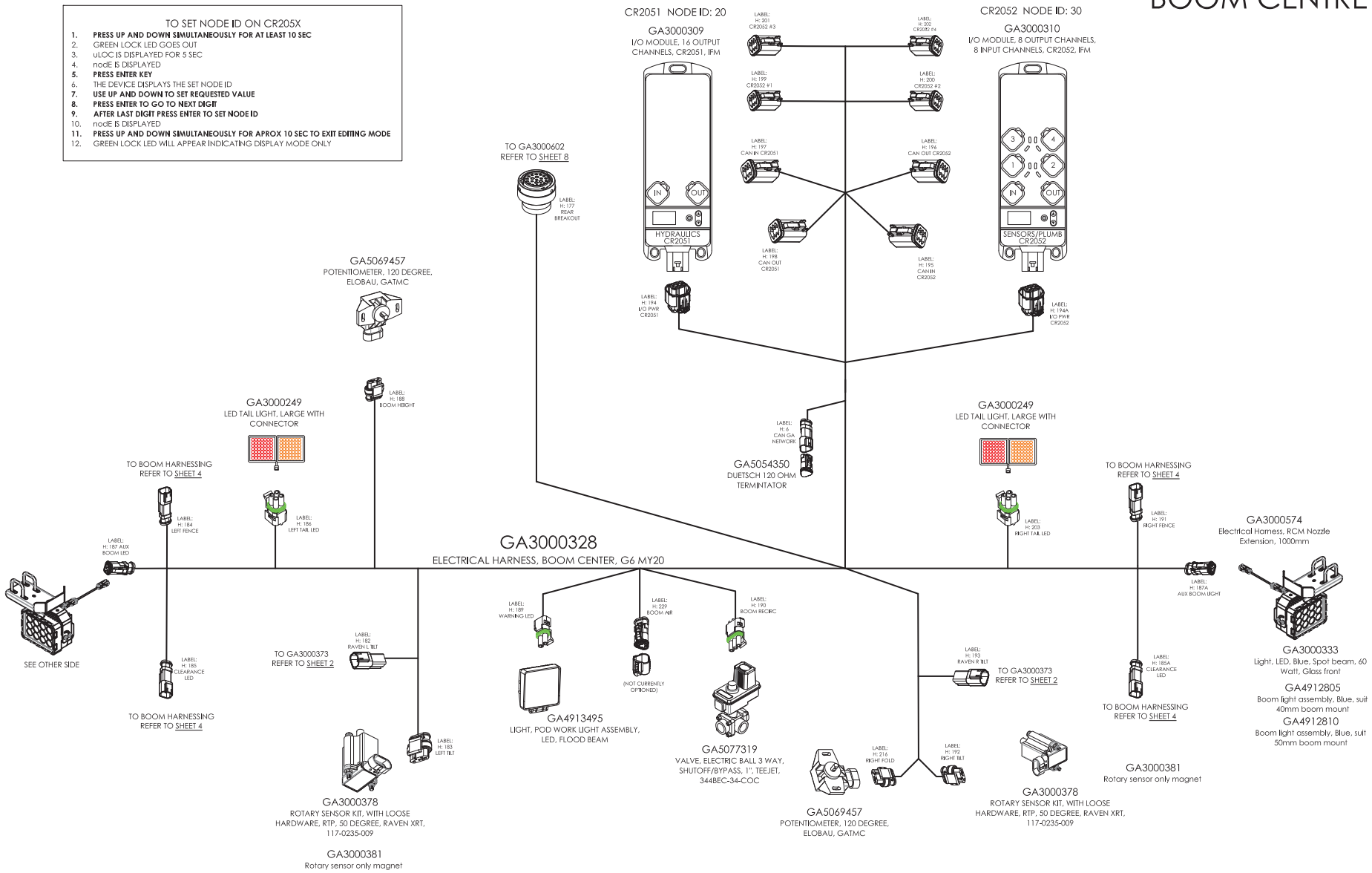

GA7500036 GOLDACRES	PRAIRIE PRO ELECTRICAL LAYOUT MY21	REV 02

Electrical Schematics, 36mt - 42mt, PLC Boom Hydraulics

36-42M HYDRAULICS

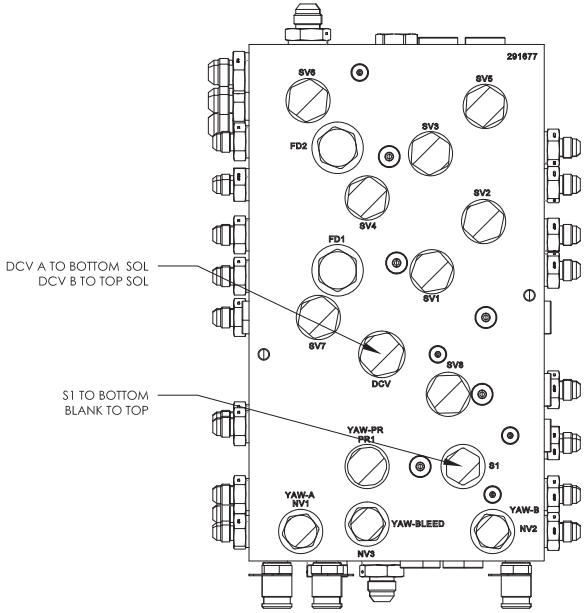

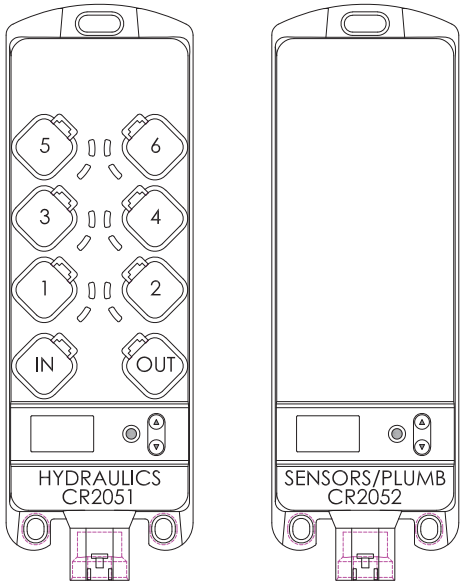

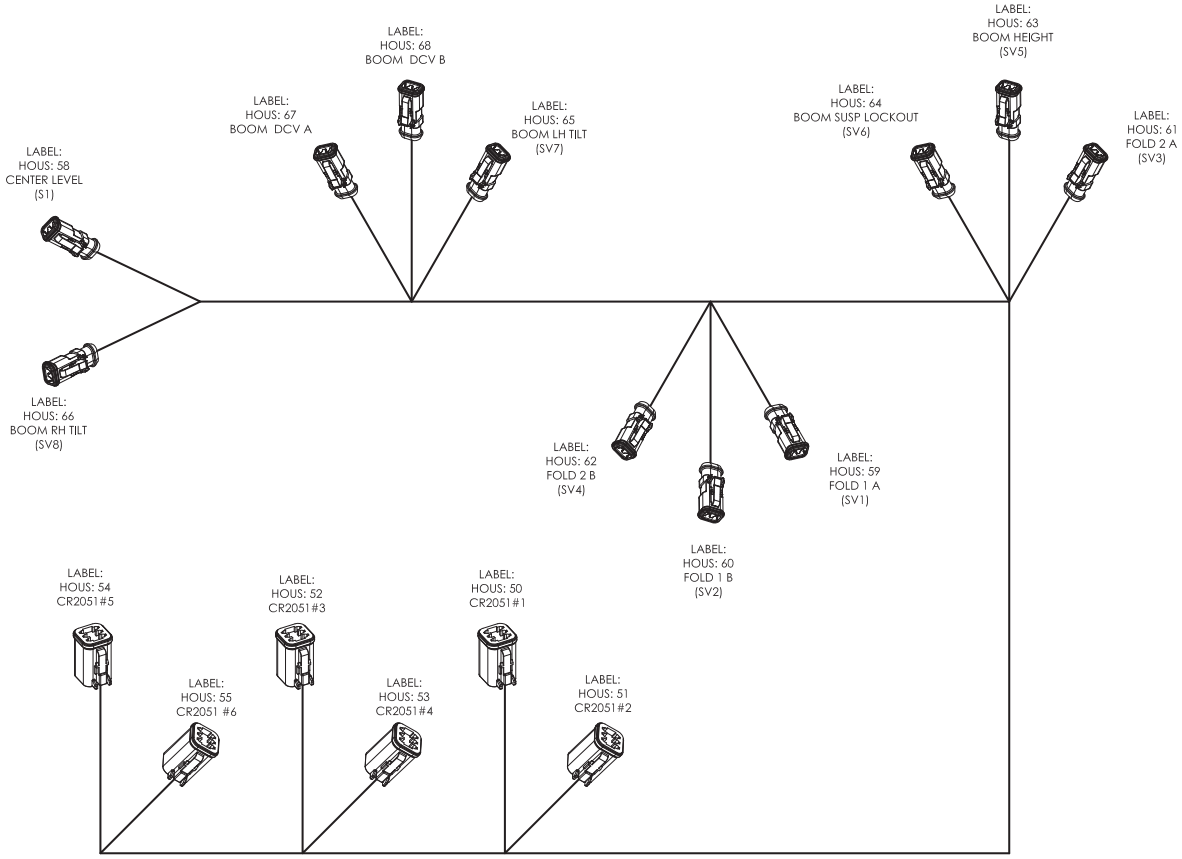

GA3000329

ELECTRICAL HARNESS, PLC BOOM HYDRAULICS, G6 MY20

GA7500036 GOLDACRES	PRAIRIE PRO ELECTRICAL LAYOUT MY21	REV 02

Electrical Schematics, 48mt, PLC Boom Hydraulics

48M HYDRAULICS

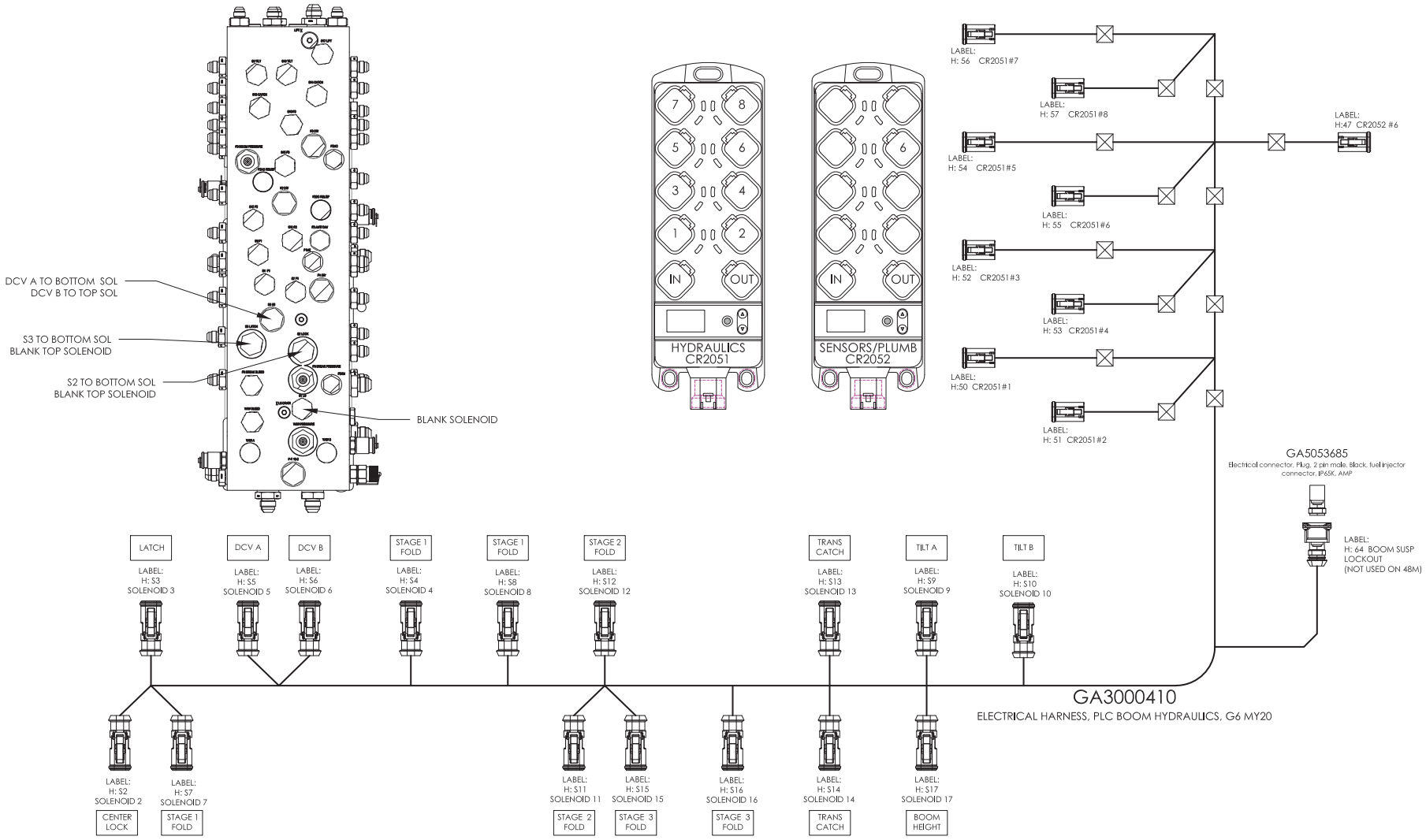

GA7500036 GOLDACRES	PRAIRIE PRO ELECTRICAL LAYOUT MY21	REV 02

Electrical Schematics, RH Pod, Hydraulics

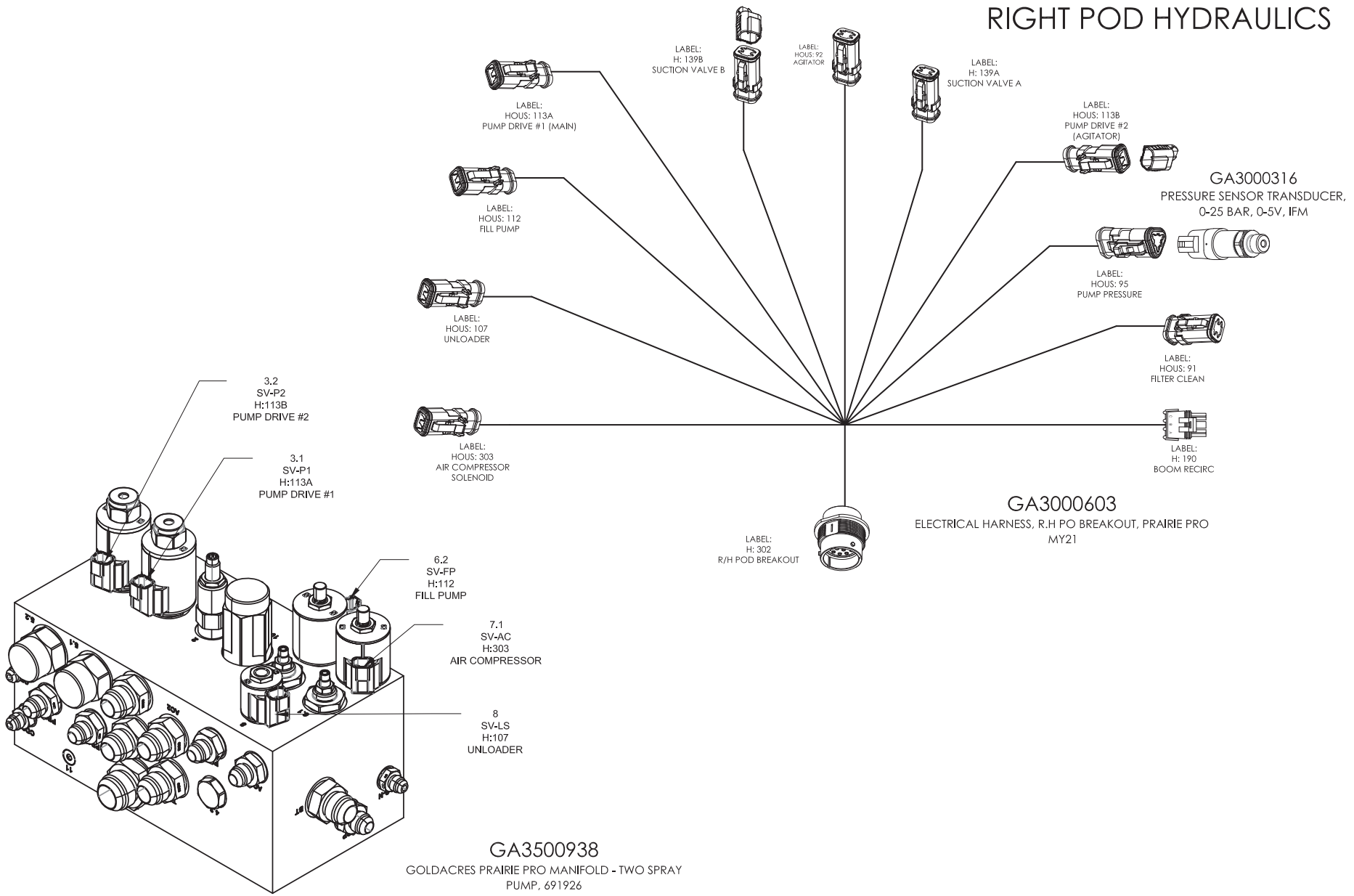

GA7500036 GOLDACRES	PRAIRIE PRO ELECTRICAL LAYOUT MY21	REV 02

NETWORKS

CANBUS NETWORKS

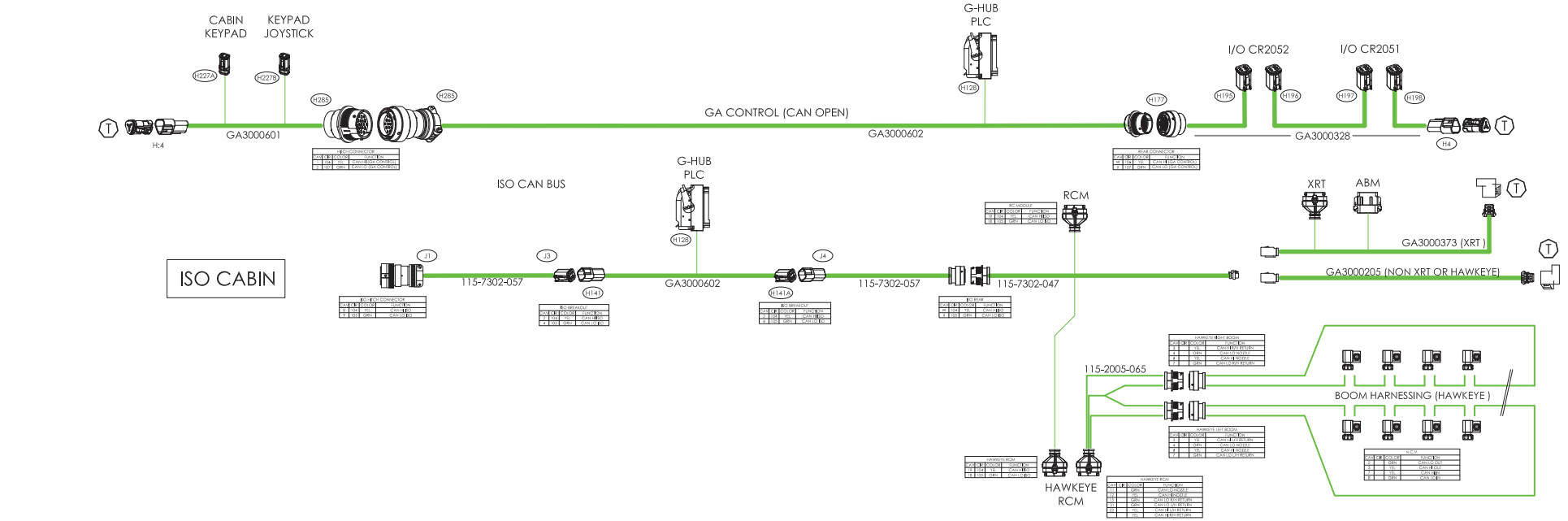

ETHERNET NETWORKS

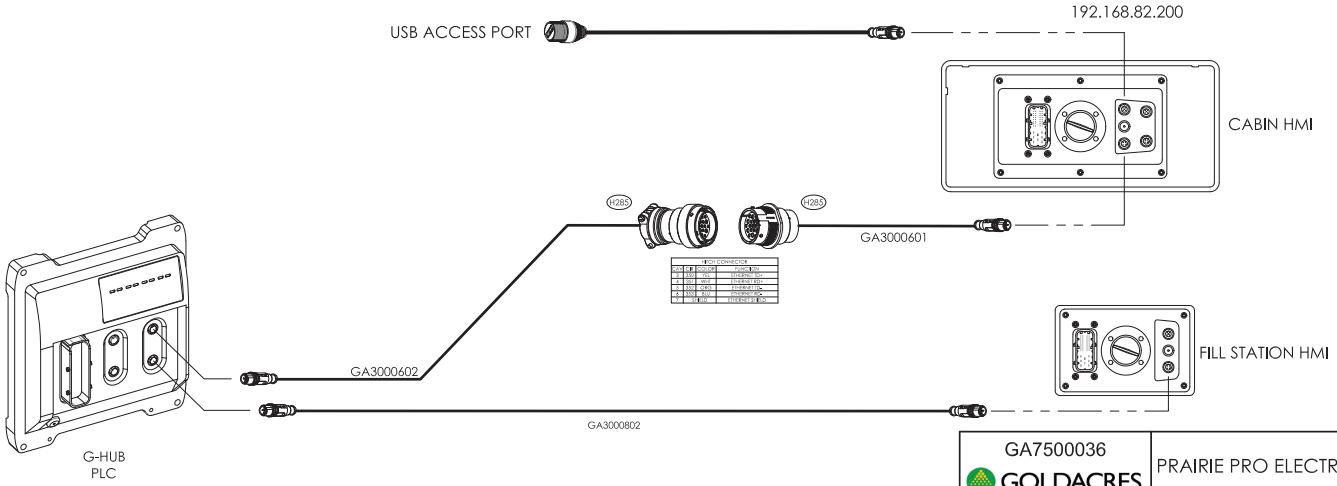

GA7500036 GOLDACRES	PRAIRIE PRO ELECTRICAL LAYOUT MY21	REV 02

Electrical Schematics, Network Layout

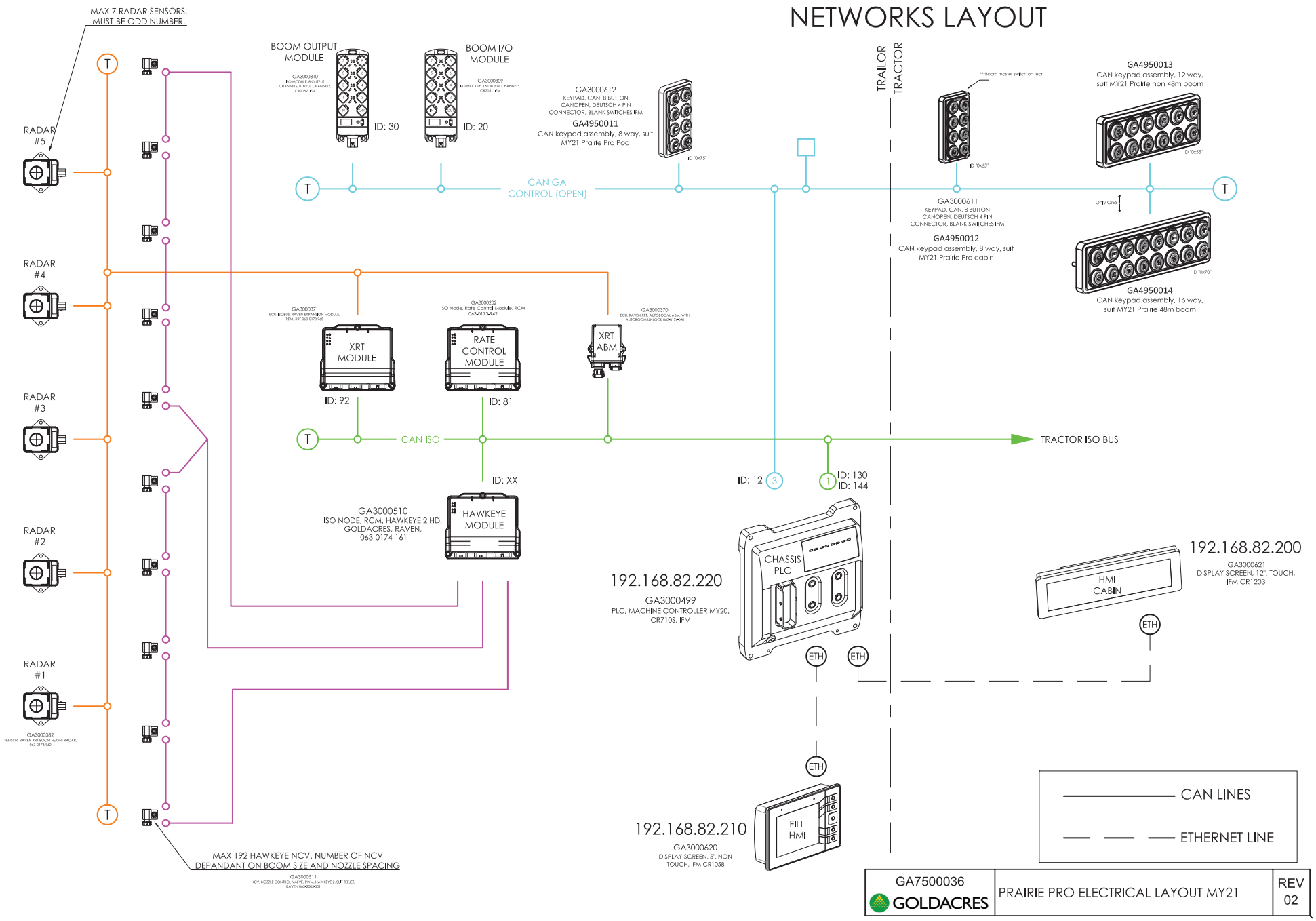

Electrical Schematics, Raven ISO, Tractor, (Optional)

RAVEN ISO BUS IN TRACTOR SETUP (OPTIONAL)

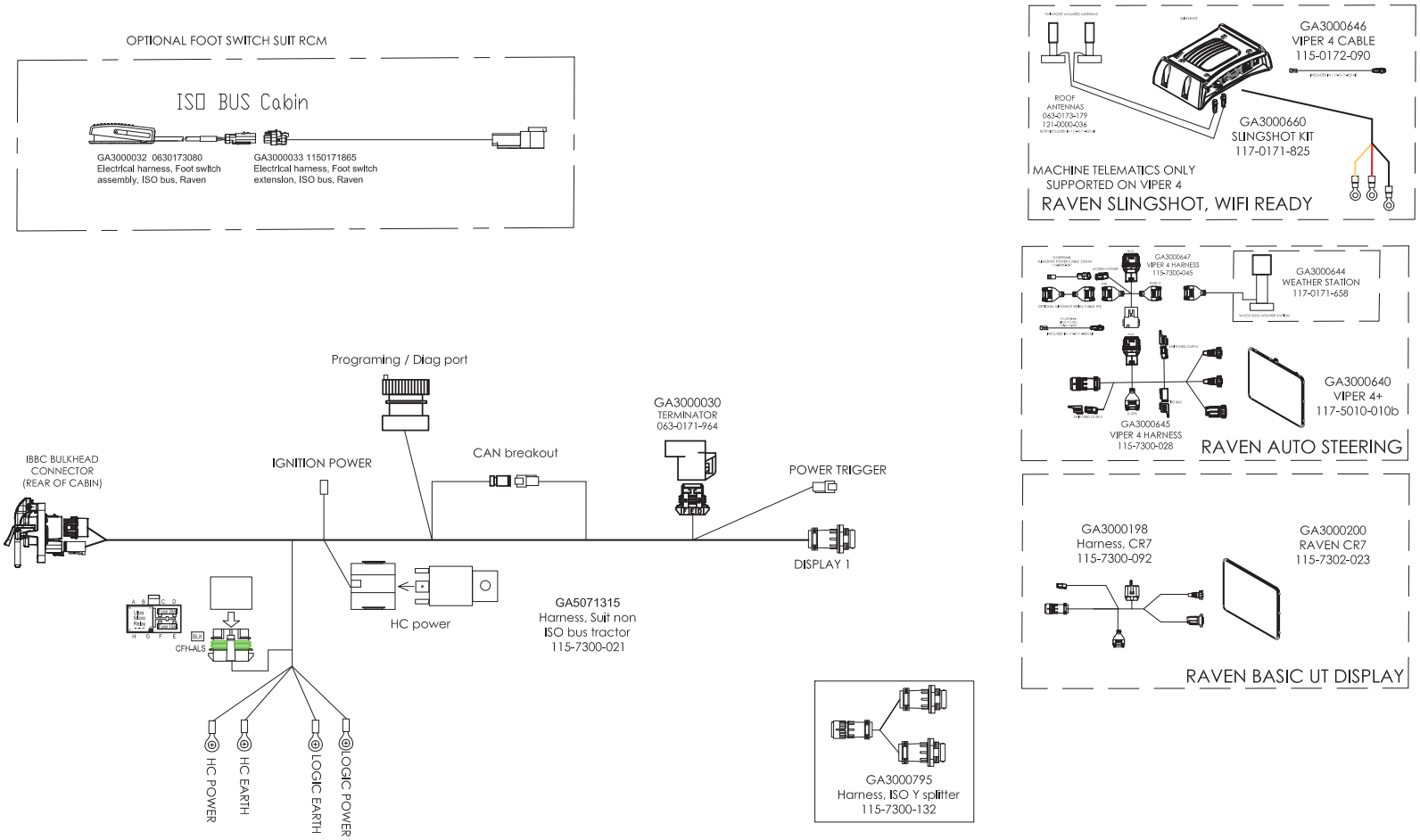

GA7500036 GOLDACRES	PRAIRIE PRO ELECTRICAL LAYOUT MY21	REV 02

Pneumatic Schematics

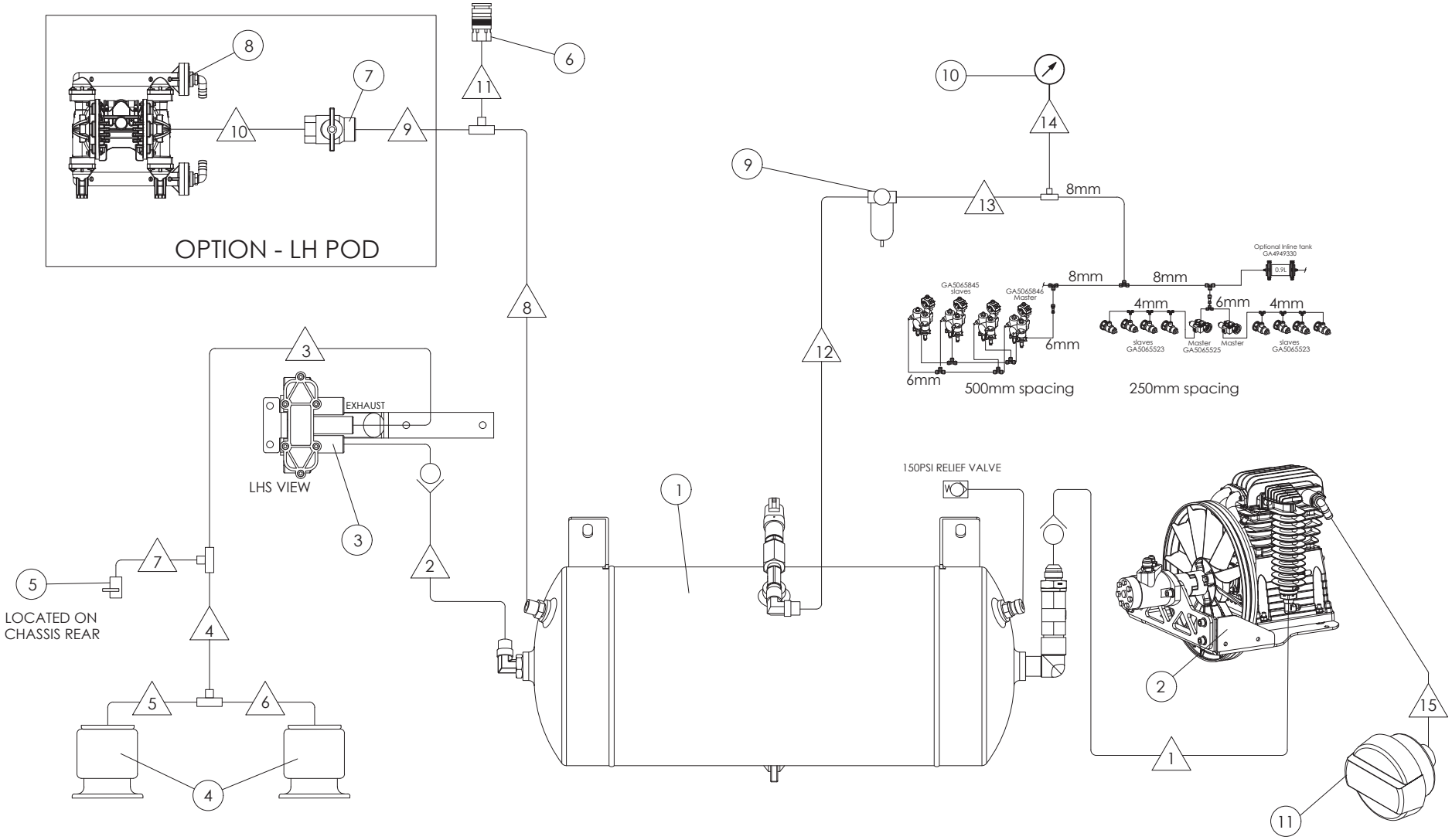

GA7500072 GOLDACRES	SCHEMATIC PNEUMATIC PRAIRIE PRO S2	REV 00

X HOSE LIST

HOSE NO.	HOSE SIZE	HOSE LENGTH 5000L	HOSE LENGTH 6500L	HOSE LENGTH 8500L	HOSELENGTH 10,000L	END FITTING 1	END FITTING 2	DESCRIPTION	QUANTITY	ORIENTATION	PART NUMBER
1	1/2 BLUE	3800	4400	4400	4400	T2040-0812	T2040-0812	AIR RESERVOIR TO RH POD	1		
2	3/8 BLACK	1050	1050	550	550			AIR RESERVOIR TO RIDE HEIGHT VALVE	1		
3	3/8 BLACK	1100	1100	320	320			RIDE HEIGHT VALVE TO TEE	1		
4	3/8 BLACK	60	60	100	100			TEE TO TEE	1		
5	3/8 BLACK	600	600	830	830			TEE TO LH AIRBAG	1		
6	3/8 BLACK	600	600	830	830			TEE TO RH AIRBAG	1		
7	3/8 BLACK	400	400	900	900			TEE TO AIR BAG DUMP VALVE	1		
8	3/8 BLACK	5000	5500	6000	6000			AIR RESERVOIR TO TEE	1		
9	3/8 BLACK	530	530	530	530			TEE TO BALL VALVE (OPTIONAL)	1		
10	3/8 BLACK	1120	1120	1120	1120			BALL VALVE TO CHEM PUMP (OPTIONAL)	1		
11	3/8 BLACK	60	60	60	60			TEE TO AIR COUPLING	1		
12	3/8 BLACK	3700	3700	4800	4800			AIR RESERVOIR TO PNEUMATIC REGULATOR	1		
13	3/8 BLACK	170	170	170	170			PNEUMATIC REGULATOR TO TEE	1		
14	8mm BLACK	10000		11000	11000			TEE TO BOOM PRESSURE GAUGE	1		
15	1" PVC	3600	3600		40000			AIR FILTER TO COMPRESSOR INLET	1		
16											
17											

X FEATURE DESCRIPTIONS

ITEM	DESCRIPTION	PART NUMBER
1	AIR RESERVOIR ASSEMBLY (INCLUDING INLET CHECK VALVE)	GA4951060
2	AIR COMPRESSOR ASSEMBLY	GA4951105
3	RIDE HEIGHT VALVE (INCLUDING INLET CHECK VALVE)	GA4951385
4	SUSPENSION AIR BAGS	5000/6500L - GA5005311 8500/10000L - GA5005115
5	AIR BAG DUMP VALVE	GA5018321
6	AIR COUPLER - LH POD	GA5076620
7	CHEMICAL PUMP AIR SUPPLY VALVE	GA4949510
8	CHEMICAL VALVE	GA4949435
9	PNEUMATIC REGULATOR - SET T0 80 PSI	GA4949595
10	BOOM PRESSURE GAUGE - LOCATED ON HANDRAIL	GAXXXXXXX
11	REMOTE AIR FILTER - MOUNTED ON BOOM REST	GA5005259

GA7500072 GOLDACRES	SCHEMATIC PNEUMATIC PRAIRIE PRO S2	REV 00

17 - Sprayer Options

Sprayer Options Index, 5000L

PRAIRIE PRO S2 5000L	
Option	DESCRIPTION
10021	RAPID FIRE WITH RAPID FLOW 500MM SPACING
10023	RAPID FIRE WITH RAPID FLOW 250MM SPACING
10041	3TS RAPID FIRE WITH RAPID FLOW 500MM SPACING (INLINE)
10061	3TS RAPID FIRE AND RAPID FLOW 250MM SPACING (STAGGERED)
10063	RAPID FIRE WITH RAPID FLOW 500MM SPACING WITH TRIJETS
10065	RAPID FIRE WITH RAPID FLOW 250MM SPACING WITH TRIJETS
10067	3TS RAPID FIRE WITH RAPID FLOW 250MM SPACING (STAGGERED) WITH TRIJETS ON TIER 1
10069	3TS RAPID FIRE WITH RAPID FLOW 250MM SPACING (STAGGERED) WITH TRIJETS ON TIER 1 & 2
10072	3TS PRO (MUST SELECT RCM IF NOT STANDARD)
20005	NOZZLE TYPE FITTED - OTHER
20007	NOZZLE TYPE FITTED - TEEJET AIXR
20008	NOZZLE TYPE FITTED - TEEJET AI
20020	BROADACRE PLUMBING
20030	ROWCROP PLUMBING
20031	NOZZLE SIZE (01) FOR TIER 1
20032	NOZZLE SIZE (015) FOR TIER 1
20033	NOZZLE SIZE (02) FOR TIER 1
20034	NOZZLE SIZE (025) FOR TIER 1
20035	NOZZLE SIZE (03) FOR TIER 1
20036	NOZZLE SIZE (04) FOR TIER 1
20037	NOZZLE SIZE (OTHER) FOR TIER 1 (SPECIFIED)
20038	NOZZLE SIZE (02) FOR TIER 2
20039	NOZZLE SIZE (025) FOR TIER 2
20040	NOZZLE TYPE (03) FOR TIER 2
20041	NOZZLE SIZE (04) FOR TIER 2
20042	NOZZLE SIZE (OTHER) FOR TIER 02 (SPECIFIED)
20049	NOZZLE SIZE (015) FOR TIER 2
20099	BOOM SECTIONS TO BE PLUMBED IN STANDARD WIDTHS
26020	BOOM PLUMBED IN 10 SECTIONS USING CENTRAL SOLENOID VALVE BANK
26030	BOOM PLUMBED IN 16 SECTIONS USING DIRECT MASTER SHUTOFFS
30074	XRT AUTO HEIGHT CONTROLLER WITH 5 SENSORS
40000	WHEELS AND TYRES 18.4 X 38
40010	WHEELS AND TYRES 520/85R42
40027	WHEELS AND TYRES 480/80R46

PRAIRIE PRO S2 5000L	
Option Number	DESCRIPTION
40051	AXLE WIDTH 2M
40060	AXLE WIDTH 3M
40070	CUSTOMER SPECIFIED AXLE TRACK WIDTH
40091	HYDRAULIC BRAKES
50020	MICROMATIC RINSE SOCKET AND MICROMATIC COUPLER
55100	FILL PUMP 3" HIGH FLOW
55110	PNEUMATIC POWERED CHEMICAL TRANSFER PUMP
65500	G-HUB 12" INTERNAL SCREEN AND REAR VIEW CAMERA KIT
70011	260L/MIN DIAPHRAGM PUMP - HYDRAULIC DRIVE
70012	CENTRIFUGAL PUMP
90100	SWIVEL TOW RING FEEDER STYLE DRAWBAR CONNECTION
90110	80MM BALL TYPE DRAWBAR CONNECTION
90120	MANUAL WIND JACK
90130	HYDRAULIC JACK
10210	TRI-TECH RIVX SERIES BOOM - 24M
10220	TRI-TECH RIVX SERIES BOOM - 28M
10230	TRI-TECH RIVX SERIES BOOM - 30M

Sprayer Options Index, 6500L

PRAIRIE PRO S2 6500L	
Option Number	DESCRIPTION
10021	RAPID FIRE WITH RAPID FLOW 500MM SPACING
10023	RAPID FIRE WITH RAPID FLOW 250MM SPACING
10041	3TS RAPID FIRE WITH RAPID FLOW 500MM SPACING (INLINE)
10061	3TS RAPID FIRE AND RAPID FLOW 250MM SPACING (STAGGERED)
10063	RAPID FIRE WITH RAPID FLOW 500MM SPACING WITH TRIJETS
10065	RAPID FIRE WITH RAPID FLOW 250MM SPACING WITH TRIJETS
10067	3TS RAPID FIRE WITH RAPID FLOW 250MM SPACING (STAGGERED) WITH TRIJETS ON TIER 1
10069	3TS RAPID FIRE WITH RAPID FLOW 250MM SPACING (STAGGERED) WITH TRIJETS ON TIER 1 & 2
10072	3TS PRO (MUST SELECT RCM IF NOT STANDARD)
10073	HAWKEYE 2ND GENERATION PWM SYSTEM - 250MM SPACING
10074	HAWKEYE 2ND GENERATION PWM SYSTEM - 500MM SPACING
20005	NOZZLE TYPE FITTED - OTHER
20006	NOZZLE TYPE - TEEJET TTI (SUITABLE FOR HAWKEYE 2)
20007	NOZZLE TYPE FITTED - TEEJET AIXR
20008	NOZZLE TYPE FITTED - TEEJET AI
20010	FENCE LINE NOZZLE - SOLENOID, DUAL SIDED
20020	BRAODACRE PLUMBING
20030	ROW CROP PLUMBING
20031	NOZZLE SIZE (01) FOR TIER 1
20032	NOZZLE SIZE (015) FOR TIER 1
20033	NOZZLE SIZE (02) FOR TIER 1
20034	NOZZLE SIZE (025) FOR TIER 1
20035	NOZZLE SIZE (03) FOR TIER 1
20036	NOZZLE SIZE (04) FOR TIER 1
20037	NOZZLE SIZE (OTHER) FOR TIER 1 (SPECIFIED)
20038	NOZZLE SIZE (02) FOR TIER 2
20039	NOZZLE SIZE (025) FOR TIER 2
20040	NOZZLE SIZE (03) FOR TIER 2
20041	NOZZLE SIZE (04) FOR TIER 2
20042	NOZZLE SIZE (OTHER) FOR TIER 2 (SPECIFIED)
20043	NO NOZZLE IN TIER 3
20044	NOZZLE SIZE (01) FOR TIER 3
20045	NOZZLE SIZE (015) FOR TIER 3
20046	NOZZLE SIZE (02) FOR TIER 3

PRAIRIE PRO S2 6500L	
Option Number	DESCRIPTION
20047	NOZZLE SIZE (025) FOR TIER 3
20048	NOZZLE SIZE (OTHER) FOR TIER 3
20049	NOZZLE SIZE (015) FOR TIER 2
26020	BOOM PLUMBED IN 10 SECTIONS USING CENTRAL SOLENOID VALVE BLOCK
26030	BOOM PLUMBED IN 16 SECTIONS USING DIRECT MASTER SHUTOFFS
30074	XRT AUOT HEIGHT CONTROLLER WITH 5 SENSORS
40000	WHEELS AND TYRES 18.4X38
40010	WHEELS AND TYRES 520/85R42
40027	WHEELS AND TYRES 480/80R46
40051	AXLE WIDTH 2M
40060	AXLE WIDTH 3M
40070	CUSTOMER SPECIFIED AXLE TRACK WIDTH
40091	HYDRAULIC BRAKES
45110	WHEELS AND TYRES 480/80R50
50020	MICROMATIC RINSE SOCKET AND MICROMATIC COUPLING
55100	FILL PUMP 3" HIGH FLOW
55110	PNEUMATIC POWERED CHEMICAL TRANSFER PUMP
60019	UNLOCK CODE FOR RAVEN HAWKEYE 2 INDIVIDUAL NOZZLE CONTROL (PREMIUM)
65500	G-HUB 12" INTERNAL SCREEN AND REAR VIEW CAMERA KIT
70011	260L/MIN DIAPHRAGM PUMP - HYDRAULIC DRIVE
70012	CENTRIFUGAL PUMP
90100	SWIVEL TOW RING FEEDER STYLE DRAWBAR CONNECTION
90110	80MM BALL TYPE DRAWBAR CONNECTION
90120	MANUAL WIND JACK
90130	HYDRAULIC JACK
10210	TRI-TECH RIVX SERIES BOOM - 24M
10220	TRI-TECH RIVX SERIES BOOM - 28M
10230	TRI-TECH RIVX SERIES BOOM - 30M
10250	TRI-TECH RIVX SERIES BOOM - 36M

Sprayer Options Index, 8500L

PRAIRIE PRO S2 8500L	
Option Number	DESCRIPTION
10021	RAPID FIRE WITH RAPID FLOW 500MM SPACING
10023	RAPID FIRE WITH RAPID FLOW 250MM SPACING
10041	3TS RAPID FIRE WITH RAPID FLOW 500MM SPACING (INLINE)
10061	3TS RAPID FIRE AND RAPID FLOW 250MM SPACING (STAGGERED)
10063	RAPID FIRE WITH RAPID FLOW 500MM SPACING WITH TRIJETS
10065	RAPID FIRE WITH RAPID FLOW 250MM SPACING WITH TRIJETS
10067	3TS RAPID FIRE WITH RAPID FLOW 250MM SPACING (STAGGERED) WITH TRIJETS ON TIER 1
10069	3TS RAPID FIRE WITH RAPID FLOW 250MM SPACING (STAGGERED) WITH TRIJETS ON TIER 1 & 2
10072	3TS PRO (MUST SELECT RCM IF NOT STANDARD)
10073	HAWKEYE 2ND GENERATION PWM SYSTEM - 250MM SPACING
10074	HAWKEYE 2ND GENERATION PWM SYSTEM - 500MM SPACING
20005	NOZZLE TYPE FITTED - OTHER
20006	NOZZLE TYPE - TEEJET TTI (SUITABLE FOR HAWKEYE 2)
20007	NOZZLE TYPE FITTED - TEEJET AIXR
20008	NOZZLE TYPE FITTED - TEEJET AI
20010	FENCE LINE NOZZLE - SOLENOID, DUAL SIDED
20020	BRAODACRE PLUMBING
20030	ROW CROP PLUMBING
20031	NOZZLE SIZE (01) FOR TIER 1
20032	NOZZLE SIZE (015) FOR TIER 1
20033	NOZZLE SIZE (02) FOR TIER 1
20034	NOZZLE SIZE (025) FOR TIER 1
20035	NOZZLE SIZE (03) FOR TIER 1
20036	NOZZLE SIZE (04) FOR TIER 1
20037	NOZZLE SIZE (OTHER) FOR TIER 1 (SPECIFIED)
20038	NOZZLE SIZE (02) FOR TIER 2
20039	NOZZLE SIZE (025) FOR TIER 2
20040	NOZZLE SIZE (03) FOR TIER 2
20041	NOZZLE SIZE (04) FOR TIER 2
20042	NOZZLE SIZE (OTHER) FOR TIER 2 (SPECIFIED)
20043	NO NOZZLE IN TIER 3
20044	NOZZLE SIZE (01) FOR TIER 3
20045	NOZZLE SIZE (015) FOR TIER 3
20046	NOZZLE SIZE (02) FOR TIER 3

PRAIRIE PRO S2 8500L	
Option Number	DESCRIPTION
20047	NOZZLE SIZE (025) FOR TIER 3
20048	NOZZLE SIZE (OTHER) FOR TIER 3
20049	NOZZLE SIZE (015) FOR TIER 2
26020	BOOM PLUMBED IN 10 SECTIONS USING CENTRAL SOLENOID VALVE BLOCK
26030	BOOM PLUMBED IN 16 SECTIONS USING DIRECT MASTER SHUTOFFS
30074	XRT AUOT HEIGHT CONTROLLER WITH 5 SENSORS
40010	WHEELS AND TYRES 520/85R42
40055	AXLE WIDTH 2.2M
40060	AXLE WIDTH 3M
40070	CUSTOMER SPECIFIED AXLE TRACK WIDTH
40091	HYDRAULIC BRAKES
45110	WHEELS AND TYRES 480/80R50
45115	WHEELS AND TYRES 520/85R46
45120	WHEELS AND TYRES 710/70R42
50020	MICROMATIC RINSE SOCKET AND MICROMATIC COUPLER
55100	FILL PUMP 3" HIGH FLOW
55110	PNEUMATIC POWERED CHEMICAL TRANSFER PUMP
60019	UNLOCK CODE FOR RAVEN HAWKEYE 2 INDIVIDUAL NOZZLE CONTROL (PREMIUM)
65500	G-HUB 12" INTERNAL SCREEN AND REAR VIEW CAMERA KIT
70011	260L/MIN DIAPHRAGM PUMP -HYDRAULIC DRIVE
70012	CENTRIFUGAL PUMP
70060	AGITATION PUMP
90100	SWIVEL TOW RING FEEDER STYLE DRAWBAR CONNECTION
90110	80MM BALL TYPE DRAWBAR CONNECTION
10230	TRI-TECH RIVX SERIES BOOM - 30M
10250	TRI-TECH RIVX SERIES BOOM - 36M
10195	TRI-TECH RIXV SERIES BOOM - 48M

Sprayer Options Index, 10,000L

PRAIRIE PRO S2 10,000L	
Option Number	DESCRIPTION
10021	RAPID FIRE WITH RAPID FLOW 500MM SPACING
10023	RAPID FIRE WITH RAPID FLOW 250MM SPACING
10041	3TS RAPID FIRE WITH RAPID FLOW 500MM SPACING (INLINE)
10061	3TS RAPID FIRE AND RAPID FLOW 250MM SPACING (STAGGERED)
10063	RAPID FIRE WITH RAPID FLOW 500MM SPACING WITH TRIJETS
10065	RAPID FIRE WITH RAPID FLOW 250MM SPACING WITH TRIJETS
10067	3TS RAPID FIRE WITH RAPID FLOW 250MM SPACING (STAGGERED) WITH TRIJETS ON TIER 1
10069	3TS RAPID FIRE WITH RAPID FLOW 250MM SPACING (STAGGERED) WITH TRIJETS ON TIER 1 & 2
10072	3TS PRO (MUST SELECT RCM IF NOT STANDARD)
10073	HAWKEYE 2ND GENERATION PWM SYSTEM - 250MM SPACING
10074	HAWKEYE 2ND GENERATION PWM SYSTEM - 500MM SPACING
20005	NOZZLE TYPE FITTED - OTHER
20006	NOZZLE TYPE - TEEJET TTI (SUITABLE FOR HAWKEYE 2)
20007	NOZZLE TYPE FITTED - TEEJET AIXR
20008	NOZZLE TYPE FITTED - TEEJET AI
20010	FENCE LINE NOZZLE - SOLENOID, DUAL SIDED
20020	BRAODACRE PLUMBING
20030	ROW CROP PLUMBING
20031	NOZZLE SIZE (01) FOR TIER 1
20032	NOZZLE SIZE (015) FOR TIER 1
20033	NOZZLE SIZE (02) FOR TIER 1
20034	NOZZLE SIZE (025) FOR TIER 1
20035	NOZZLE SIZE (03) FOR TIER 1
20036	NOZZLE SIZE (04) FOR TIER 1
20037	NOZZLE SIZE (OTHER) FOR TIER 1 (SPECIFIED)
20038	NOZZLE SIZE (02) FOR TIER 2
20039	NOZZLE SIZE (025) FOR TIER 2
20040	NOZZLE SIZE (03) FOR TIER 2
20041	NOZZLE SIZE (04) FOR TIER 2
20042	NOZZLE SIZE (OTHER) FOR TIER 2 (SPECIFIED)
20043	NO NOZZLE IN TIER 3
20044	NOZZLE SIZE (01) FOR TIER 3
20045	NOZZLE SIZE (015) FOR TIER 3
20046	NOZZLE SIZE (02) FOR TIER 3

PRAIRIE PRO S2 10,000L	
Option Number	DESCRIPTION
20047	NOZZLE SIZE (025) FOR TIER 3
20048	NOZZLE SIZE (OTHER) FOR TIER 3
20049	NOZZLE SIZE (015) FOR TIER 2
26020	BOOM PLUMBED IN 10 SECTIONS USING CENTRAL SOLENOID VALVE BLOCK
26030	BOOM PLUMBED IN 16 SECTIONS USING DIRECT MASTER SHUTOFFS
30074	XRT AUOT HEIGHT CONTROLLER WITH 5 SENSORS
40055	AXLE WIDTH 2.2M
40060	AXLE WIDTH 3M
40070	CUSTOMER SPECIFIED AXLE TRACK WIDTH
45110	WHEELS AND TYRES 480/80R50
45120	WHEELS AND TYRES 710/70R42
50020	MICROMATIC RINSE SOCKET AND MICROMATIC COUPLER
55100	FILL PUMP 3" HIGH FLOW
55110	PNEUMATIC POWERED CHEMICAL TRANSFER PUMP
60019	UNLOCK CODE FOR RAVEN HAWKEYE 2 INDIVIDUAL NOZZLE CONTROL (PREMIUM)
65500	G-HUB 12" INTERNAL SCREEN AND REAR VIEW CAMERA KIT
70011	260L/MIN DIAPHRAGM PUMP -HYDRAULIC DRIVE
70012	CENTRIFUGAL PUMP
90100	SWIVEL TOW RING FEEDER STYLE DRAWBAR CONNECTION
90110	80MM BALL TYPE DRAWBAR CONNECTION
10230	TRI-TECH RIVX SERIES BOOM - 30M
10250	TRI-TECH RIVX SERIES BOOM - 36M
10195	TRI-TECH RIXV SERIES BOOM - 48M

Goldacres Terms & Conditions of Sale & Warranty

1. These terms and conditions apply to all goods and/or services supplied by us to you. You are agreeing to them by placing an order with us.
2. Unless you have a previously approved account with us you must pay us the purchase price for the goods and/or services we supply to you, together with any other applicable fees or charges immediately on delivery or collection of the goods, or if ordered online or by phone on the placement of your order. All repairs or servicing must be paid for before we will release the goods to you. If you do have an
3. Time is of the essence for all payments required under these conditions.

Unless specifically stated otherwise, all prices which we quote or est4. Estimate to you are inclusive of GST for goods supplied within Australia and exclusive of GST for goods exported outside of Australia. If GST is payable on a Taxable Supply made by us to you, then you must also pay the amount of GST payable in respect of that Taxable Supply as an additional payment.

5. You must pay interest on any amounts not paid by the due date at a rate 2% higher than the rate for the time being fixed under section 2 of the Penalty Interest Rates Act 1983 (Victoria) as at the date the amount became due.
6. Property in goods supplied (and in any goods which we may have previously supplied to you) remains with us until we have been paid in full for all amounts you owe us including payment for the goods and any applicable interest, fees and charges, and until then:

   a. You hold the goods only as a bailee and have no right to claim any other interest in the goods, including any security for any liquidated or unliquidated debt or obligation that we owe you, or any lien over the goods;

   b. We may enter and recover possession of the goods from any site owned, possessed or controlled by you and you

   c. You must not deliver or on-supply any of the goods (nor any document of title to them) to any person, but if you do then you hold the proceeds of the on-supply of the goods on trust for us and must pay the amount to us immediately when received;

   d. You must not allow any person to have or acquire any security interest in the goods nor create any absolute or defeasible interest in the goods in relation to any third party except as we may authorise;

   e. You must insure the goods for their full insurable or replaceable value (whichever is higher) and provide us with details of the insurance if we request it;

   f. You must not remove, deface or obliterate any identifying mark or number on any of the goods;

   g. Your right to possession of the goods ceases if we recall or recover the goods, or if you become insolvent, you enter into voluntary or involuntary administration or receivership, or a petition is filed for your bankruptcy or winding up.

You further agree:

   h. That the retention of title under this clause is a security interest within the meaning of the Personal Property Securities Act 2009 (Cth) ("PPSA");

   i. To grant us a purchase money security interest (as that term is defined in the PPSA) in relation to the goods;

   j. To contract out of all of your existing and future rights under the provisions referred to in paragraphs (a) through to (r) of section 115(1) of the PPSA, to the full extent permitted;

   k. To sign any documents or do any things which we may reasonably require to enable us to register a financing statement or financing change statement on the register (as defined in the PPSA);

   l. To pay any costs we incur in registering and maintaining a financing statement (including registering a financing change statement) and enforcing the security interest created under these terms and conditions.

7. Risk in the goods passes to you upon their delivery to or collection by you.
8. You hereby indemnify us and our employees, directors, contractors and agents against, and release us and them from, any loss (including reasonable legal costs and expenses) or liability incurred by us and/or them arising from any claim, demand, suit, action or proceeding by any person against us and/or them where such loss or liability arose directly or indirectly from or in connection with any breach of these terms and conditions or from use of the goods and/or services unless such liability is directly caused by the negligence or default of the person indemnified.
9. You, or anyone on your behalf must not, and you must take steps to ensure that your employees, agents and contractors do not, nor assist anyone else to:

   a. Copy, memorise, reproduce, misappropriate or reverse engineer the whole or any part of the goods

   b. Challenge, contest or oppose any of our intellectual property rights

   c. Use any name or logo associated with the goods other than as we authorise you

   d. Divulge our confidential information to any person or use it for your own benefit except as we have expressly authorised or as required by law.

10. Any specifications, drawings, details, statistics or performance figures we may have given you about the goods and/or services are only estimates and any deviation does not entitle you to make any claim against us. Any sample is provided only to indicate the general nature of the product, and we do not warrant that goods supplied will exactly correspond with any sample or with any previous or future goods supplied.
11. Except as stated in any separate written warranty we may provide you with the goods or a quote, under no circumstances will we have any liability to replace or repair defects in the goods where:

    a. The defects have not arisen solely from faulty materials supplied by us or faulty workmanship by us;

    b. The goods have received maltreatment, inattention or interference or have been used, applied, packaged or stored other than in accordance with our instructions and recommendations;

    c. Products not manufactured by or approved by us have been used with the goods.

12. Except as provided in these conditions, all express and implied warranties guarantees and conditions under statute or general law as to merchantability, description, quality, suitability or fitness of the goods for any purpose or as to design, assembly, installation, materials or workmanship or otherwise are expressly excluded. We are not liable for physical or financial injury, loss or damage or for consequential loss or damage of any kind arising out of the application, supply, layout, assembly, installation or operation of the goods or arising out of our negligence or in any way whatsoever. The exceptions in clause (12) extend to any Third Party Accessories installed in the goods.
13. If any condition or warranty is implied into this agreement under the Competition and Consumer Act (2010) (Cth) or any equivalent State or Territory legislation and cannot be excluded, then our liability is limited to one or more of the following:

    a. In the case of goods, the replacement of the goods or the supply of equivalent goods, the repair of the goods, the payment of the cost of replacing the goods or of acquiring equivalent goods, or the payment of the cost of having the goods repaired;

    b. In the case of services, the supplying of the services again, or the payment of the cost of having the services supplied again.

14. Nothing in these conditions is to be read or applied so as to exclude, restrict or modify or have the effect of excluding, restricting or modifying any condition, warranty, guarantee, right or remedy implied by law and which by law cannot be excluded, restricted or modified.
15. Any quotes on pricing provided by us are consistent with the prevailing market at the time of quotation, including considerations as to rates of freight, insurance, customs, duties, exchange, shipping expenses, sorting and stacking charges, cartage, cost of materials and other charges affecting the cost of production prevailing at that date.
16. Any increases in the quote price occurring either before or during the agreement, shall be to your account.
17. Our quotations are open for acceptance within the period stated therein. If no period is stated, our quotations are open for acceptance for (14) fourteen days from the date the quote was given.
18. All prices listed in our quotations and product catalogue are subject to change or alteration without notice.
19. Unless we otherwise agree in writing we accept credit card or eftpos payments only.
20. We do not accept payment by cheque unless we have previously agreed in writing to do so.
21. Any goods you deliver to us must be free of any chemicals. If you deliver goods that are not free of chemicals, you must pay any costs incurred by us including the cost of our own staff in removing and disposing of the chemicals and cleaning the goods.
22. If after 28 days of notifying you that your goods are ready for delivery we have received no communication from you, we retain any rights under the Australian Consumer Law and Fair Trading Act 2012 (Vic) to sell the goods to recover the value of any outstanding debt you may owe us.
23. You are responsible for backing up any Data that you, or your agent, may install on the goods. If the Data is wiped, corrupted, or lost, we are not liable (whether we are negligent or otherwise) for any damage that may result from that Data being wiped, corrupted or lost.
24. Before you use any of our goods you must check, and if necessary adjust, all settings to ensure the goods are properly calibrated.
25. We are not liable to you for any failure by us to perform any of our obligations under this agreement caused by an impediment or circumstance beyond our control.
26. In these terms and conditions,

    a. "We", "us" or "our" means the entity within the Goldacres Group from which you purchase goods and/or services, including, but not limited to:

       i. Goldacres Trading Pty Ltd ACN 061 306 732; and

       ii. Goldacres Sprayer Centre Pty Ltd ACN 639 231 520

    b. "You" or "your" means the individual or company that purchases goods and/or services from us.

    c. "Our confidential information" includes all of our secrets, ideas, know how, concepts, information, copyright, computer programs, manuals, precedents whether in writing or in any other form and all other information relating to us or our affairs, businesses, sales, marketing or promotional information, and any information about the ingredients, mix, make-up or manufacturing process of the goods

    d. "Goods" includes any associated services except where the context does not permit.

    e. "Third Party Accessories" includes anything incorporated in the goods that is manufactured and supplied to us by a third party.

    f. "Data" includes any information capable of being installed and or stored on an electronic device.

27. Used Goods- For any second hand or used Goods sold, except to the extent that a manufacturer's warranty applies.

    a. All used or second-hand Goods are sold on an "as is where is" basis with all existing or future inadequacies, faults or defects, if any, and whether they are known or unknown.

    b. The Seller does not warrant the second hand or used Goods are fit for any purpose or free from any defects and does not warrant the accuracy of any service or repair history, meter or hour readings and to the extent permitted by law the Buyer releases the Seller from all liability arising or connection with any defects faults or inadequacies in the Goods and any warranty under these terms or at law excludes liability for costs other than what is reasonable or customary to rectify and does not include costs for time or labour, testing, travel or freight or packaging and handling.

GOLDACRES

www.goldacres.com.au